DYNAMIS ENERGY™

776 E. Riverside Dr., Ste 150
Eagle, ID 83616

January 8, 2013

Via Email

Mr. Morrie Lewis, Permit Writer
Department of Environmental Quality
Air Quality Division
1410 North Hilton
Boise, Idaho 83706-1255

Re: **Mercury Control and Monitoring Equipment**
Waste-to-Energy Project at Hidden Hollow Landfill
Facility ID No. 001-00252, Dynamis Energy, LLC, Boise

On April 25, 2012, Dynamis Energy, LLC (Dynamis) submitted to the Department of Environmental Quality a permit to construct application for a waste-to-energy project to be located at Hidden Hollow Landfill in Boise. On December 14, 2012, Dynamis submitted a mercury control analysis and revised modeling report to DEQ. DEQ has reviewed the application materials and determined that additional information is required. On December 28, 2012, Dynamis received a letter (via email) from DEQ requesting the following information in accordance with IDAPA 58.01.01.202.03:

Mercury Emission Limit
1) Controlled emissions were estimated at 12.8 pounds of mercury per year. Please confirm or verify this estimate has been proposed as an annual emission limit in accordance with IDAPA 58.01.01.213.01.c.

> Dynamis has estimated mercury emission of 18.3 pound of mercury per year (9.13E-03 tons per year), as shown in the emissions inventory and potential to emit (PTE) information submitted to DEQ. As shown in the MBACT analysis, wet scrubbing systems have control efficiencies ranging from 2.74% to 99.9% (upper and lower confidence interval of 85% and 68.4%, respectively), with a mean control efficiency of 77.8%. Dynamis is confident that the wet scrubber proposed for installation can achieve at least the mean control efficiency, however, to allow for any variability in waste stream and speciation of mercury, Dynamis' mercury PTE emissions are based on 68.4% control by the wet scrubbing system.

Mercury control effectiveness and operating parameters
2) The scrubber control guarantee provided does not address mercury removal rates. Discuss whether the proposed scrubber has been designed specifically for mercury removal, and provide a vendor guarantee of mercury removal performance if possible. Provide information regarding any aspects of the scrubber design that may specifically target mercury removal, and identify key operating parameters.

> The wet scrubbing system proposed for the Dynamis WTE facility was designed by Direct Contact, LLC as a heat recovery system also capable of pollution abatement. The manufacturer guarantees control of acid gas and particulate matter, but does not guarantee control of mercury as this is not what the scrubber is specifically designed for.
>
> As discussed above, wet scrubbing systems have control efficiencies ranging from 2.74% to 99.9% (upper and lower confidence interval of 85% and 68.4%, respectively), with a mean control efficiency

of 77.8%. Although the lower confidence interval was used to calculate the mercury PTE for the system, Dynamis is confident that the wet scrubber proposed for installation can achieve at least the mean control efficiency, based on the scrubber design and key operating parameters, specifically multistage scrubbing with heat recovery and scrubbing water treatment/filtration.

The wet scrubber proposed for the Dynamis Energy WTE facility closely matches the process description for a three-stage system as described in "Mercury Study Report to Congress-Volume VIII: An Evaluation of Mercury Control Technologies and Costs." This three-stage design provides mercury removal by creating a cool oxidizing atmosphere with significant mass transfer opportunity. Due to mercury's low vapor pressure and boiling point of 357 C various forms of mercury vapor are condensed in this cool (<100 C) environment, forming particulate and water-soluble oxidized mercury. These become part of the scrubbing water solution and both particulate and oxidized mercury are removed by the water filtration/purification system.

The wet scrubbing system employs three flue gas cleaning stages coupled with heat recovery for improved performance. Reducing the scrubbing water temperature, by heat recovery, results in an increase, over non-heat recovery scrubbers, in removal of acid gas and mercury. The stages consist primarily of a gas cooling/spray quench section that controls acid gases (primarily HCl), a packed bed caustic spray section that controls acid gases (primarily SO_2) and large particulate (metals, fly ash, etc.) and a coalescing mesh pad and mist eliminator pad section to control fine particulate (metals, fly ash, dioxins, furans, etc.) in the 1 micron diameter and larger range. As the flue gas is progressively cooled in each stage, the size of PM removed becomes smaller so that in the last stage particle sizes typical of aerosols are removed.

Referring to DC's proposal document (62-LO3.pdf attached), Direct Contact states:

> "These vessels are of a special design, as not only do they recover heat but they also absorb acid gases and remove particulates. First the flue gas is saturated and adiabatically cooled before entering the gas absorption section of the vessel. Then it passes to the heat recovery section of the vessel and the gas is further cooled before entering the scrubbing section where solid particulate is combined (via impaction and interception) in a coalescing mesh pad that captures solid material within liquid droplets. Most of these droplets are entrained in the gas flow leaving the coalescing mesh pad but captured in the mist elimination mesh pad above."

Please see process flow drawing D062-F-01A (attached) to aid in the understanding of the different stages of this scrubbing system. Each stage of the scrubber utilizes a different set of spray nozzles. The nozzles in the cooling and packed bed stages supply a large volume of scrubbing water that is re-circulated through a heat exchanger to recover heat from the flue gas and maintain the scrubbing water at as low a temperature as possible. A small amount of this water is continually removed (blown down) filtered and treated so that the pH level is maintained for optimal acid neutralization. Flow rates are continuously adjusted between the quench spray nozzles and the packed bed spray nozzles to insure proper gas cooling and acid gas removal. The third stage (fine particulate removal) sprays are used to clean the coalescing mesh filter pads as PM conglomerates in the filters. Most PM conglomerates with moisture in the flue gas until the droplets are so large that they fall out of suspension in the gas stream and become part of the filtered scrubbing water. However, when the differential pressure across the coalescing pads (a key operating parameter determined by the scrubber manufacture) increases past a set point, the mesh pads are sprayed (backwashed) with very pure (RO quality) water to remove any build up of PM. This water also falls into the lower stages to be treated and filtered.

The filtration/purification system (provided by others) utilizes a multimedia filter for coarse PM, oil, organic compound removal and softening, an activated carbon filter for heavy metal and chlorine removal, and a reverse osmosis unit for removal of molecular contaminants. After a specified volume

of water has been filtered or the filters/resins have become saturated with contaminants (typical operating parameter for water softeners and RO systems), the filters are backwashed to regenerate the filter materials. This backwash or blow down water contains the majority of contaminates that were removed from the scrubbing water. The backwash and blow down water is concentrated, thickened and dewatered to form a cake that is disposed of as required by regulations. This is similar to the process used in municipal wastewater facilities.

Examples of similar systems and coalescing filter components can be found using the resources below:

http://www.amplastcorp.com/Coalescing%20Scrubber.html

http://www.airclear.net/oxidizers_air_clear_air_clear.html

http://www.natcoparts.com/catalogue/product/view/prod_id/44

Mercury monitoring system

3) Identify key design and operating parameters for the proposed mercury sorbent trap monitoring system (STMS), including sorbent trap exchange frequency.

NSPS Subpart Eb provides for the use of a continuous mercury monitoring system as a compliance option under 40 CFR 60.58b(d)(4). Discuss whether the STMS will be specified for determining compliance with both the mercury emission limit in 40 CFR 60.52b(a)(5)(ii) and the annual emission limit. If available, provide a copy of the site-specific monitoring plan as specified in 40 CFR 60.58b(n) through (q), or similar such plan, to address elements of installation, performance, and equipment specifications, performance evaluation procedures, malfunction or out-of-control period provisions, and data quality assurance procedures.

The STMS will not be used for determining compliance with the mercury emission limit in 40 CFR 60.52b(a)(5)(ii). Compliance with emissions limits in Subpart Eb will be demonstrated through the use of the initial and annual stack tests. As such, a site-specific monitoring plan as specified in 40 CFR 60.58b(n) through (q) will not be developed. However, the STMS system will meet and exceed the requirements as set forth in 40 CFR 60.58b(d)(4). Procedures for installation, operation and maintenance of the STMS unit will be included in the Operations and Maintenance (O&M) manual developed for the facility (required by Subpart Eb). Where applicable, Dynamis will follow Performance Specification 12B for monitoring the continuous emission rate and vapor phase mercury emissions. In accordance with the specification, pre- and post-leak checks will be conducted when changing traps and the quarterly calibration of the dry gas meters will be conducted at a single flow rate. Sorbent traps can be exchanged at varying frequencies; however, for purposes of complying with the IDAPA 58.01.01.215, a 30-day sorbent trap will be used.

Diverter stack emissions

4) Uncontrolled emission events (e.g. due to upset or malfunction) were not considered within the inventory of emission estimates or within the modeled operating scenarios. Discuss any control and monitoring options considered for the diverter stack emissions pathway. As proposed, emissions from the diverter stack would qualify as excess emission subject to the requirements of IDAPA 58.01.01.130-136.

Emissions from start-up, shutdown and scheduled maintenance are included in the peak and off-peak 'ramp-up' and 'ramp-down' operation schedule; therefore emissions due to those events are inherently included in the emissions estimates and modeled operating scenarios. In addition, start-up, shutdown and scheduled maintenance events are not anticipated to produce excess emissions.

Excess emissions from an upset or malfunction of the primary or secondary chamber will not exhaust through the diverter stack. An upset event occurring in the combustion chambers may result in emissions higher than the calculated uncontrolled emissions in the emissions inventory; however, the exhaust would still flow through the boiler and wet scrubber. That being said, because incoming flue gas concentrations into the scrubber may be above the range of the scrubber design, scrubber control efficiency may be lower than expected, resulting in excess emissions.

However, due to the design of the system, it is unlikely that excess emissions due to an upset or malfunction of the primary or secondary chamber will occur. An upset (emission of pollutants in excess of the design values) may occur if insufficient combustion air is supplied to the secondary combustion chamber during normal operation. This event is very unlikely due to that combustion air to the secondary chamber is supplied to maintain an excess O2 concentration after combustion above 7%. This value is continuously measured by the automated system (and monitored by personal) in multiple ways and in multiple locations. No one sensor (or measurement) is relied upon to insure proper combustion occurs. Oxygen level, pressure and temperatures are measured prior to combustion, post combustion, prior to scrubbing and post scrubbing. System inputs are continuously adjusted in response to these measurements to insure proper combustion is occurring at all times. In addition to these redundant monitors of combustion, the heat recovery steam generator (HRSG) and scrubber heat exchanger are equipped with soot blowers to remove any potential fly ash that could accumulate causing a small upset of particulate. Finally, the scrubber has the ability to capture pollutants in excess of the design values (upsets) for short time periods. An upset would result in higher levels of pollutants captured thus more frequent wash-down of the coalescing pads and treatment of scrubbing water. If an upset condition were to occur that the automated control system could not correct, facility personal would take corrective action as described in the facility operations manual. A brief example from the operations manual of these corrective steps follows:

Emission Monitor Alarm Condition	**Action Required** *(consult flow charts in manual for more detailed actions)*
Stack O2 monitor (stack O2 less than 7%)	1. Determine if scrubber inlet O2 concentration matches stack concentration. If not, consult scrubber section. 2. Initiate an increase in secondary combustion air at stage 2 ports using the semi-automated function. Monitor secondary temperature to avoid decreasing final secondary temperature below 1900F. 3. If temperature drops below 1900F before 7% O2 concentration is reached see below.
Secondary Temperature (final temperature at secondary exit less than 1900F)	1. Determine if secondary chamber stage 2 burners are firing. a. If burners are **not** firing manually initiate stage 2 secondary burners. b. If burners **are** firing, increase secondary stage 2 combustion air and increase stage two burners firing rate until secondary temperature reaches 1900F 2. Lock new conditions into automation program as "New Set points" then return system to "auto." *Note: Automation program will adjust syngas flow to secondary to compensate for stage 2 burner firing and reduce burner firing rate to reduce natural gas consumption.*
Stack Opacity monitor (stack opacity greater	1. Verify that stack O2 is greater than 7%. If not

than 10%, visible PM emission)	see actions required from above. 2. Verify temperature reading at secondary chamber exit is between 1900-2000F. 3. Verify pressure drop across scrubber is within its specification. If not, initiate scrubber pad wash down. 4. Initiate soot blowers in HRSG. 5. If problem persists, increase firing rate of stage 1 secondary burners until opacity is below 10%. *Note: A reduction in syngas flow to the secondary chamber may be required if stage 1 burners are at full capacity.*
SO2 Monitor (SO2 concentration exceeds set point)	1. Check scrubber water flow rate and verify it is within scrubber specification. 2. Determine sodium hydroxide delivery rate and cross check with manual (scrubber section) specification. 3. Determine scrubber water Ph value. Consult scrubber section to verify if value is within specification. 4. If values are out side of the specifications, consult scrubber trouble shooting section. *Note: These checks may require manual observation of gauges on equipment if the control system is operating incorrectly.*
HCl Monitor (HCl concentration exceeds set point)	1. Check scrubber water flow rate and verify it is within scrubber specification. 2. Determine sodium hydroxide delivery rate and cross check with manual (scrubber section) specification. 3. Determine scrubber water PH value. Consult scrubber section to verify if value is within specification. 4. If values are out side of the specifications, consult scrubber trouble shooting section. *Note: These checks may require manual observation of gauges on equipment if the control system is operating incorrectly.*

Emissions from the diverter stack will only occur during a catastrophic failure of the HRSG, turbine or scrubber, such that combusted syngas from the secondary chamber could not be sent through the boiler or scrubber and exhausted through the main exhaust stack. An event such as this is unlikely due to that it would only occur due to the failure of multiple redundant systems. An overview of the emergency shutdown sequence is below, but due to the highly unlikely chance of this occurring it is impractical to develop procedures pursuant to Subsection 134.04. In this event, emissions from the diverter stack would be equal to the uncontrolled emissions calculated in the emissions inventory.

Emergency shut down sequence overview (total shutdown time ~ 30 minutes):

1. Catastrophic failure of boiler, turbine or scrubber.
   Most likely cause of catastrophic failure is from power loss due to power grid failure (Idaho Power) **and** fault within the facility grid (excluding momentary interrupts that UPS's protect against). Grid failure can occur with no failure if facility grid is intact and vice versa.
2. Server and control system begin emergency shutdown procedure.
   No interruption of control occurs due to UPS.
3. Emergency and exterior lighting comes on immediately after failure event.

4. Diverter Stack damper is activated to divert flue gas away from boiler.
   Diverter valve is a normally open valve to the diverter stack so loss of power will cause the valve to switch to the diverter stack automatically.
5. Back-up generator starts and emergency circuits are energized.
   Maximum lag time is 30 sec.
6. Quench valves are triggered in primary chambers stopping the gasification process.
7. Primary gasification dampers closed.
   Passive emergency relief valves reduce any pressure build up that occurs during shut down.
8. Residual syn-gas combustion.
   Remaining syngas flow is diverted to secondary chamber #1 (chamber #2 is shut down) to ensure residual syngas is combusted prior to exiting the diverter stack. Secondary chamber temperature is maintained at 1900F until syngas flow from primary chambers stops.
9. Sump pumps, building exhaust fans and air compressor resume operation on emergency power.
10. Turbine dumps steam to condenser/cooling tower.
11. Low steam valve trips.
    After low steam valve trips the turbine turning gear/motor maintains rotation, oil and coolant pressure/flow. Utilizes power from emergency generator.
12. Boiler by-pass to cooling tower valves activated.
13. Boiler feed water pump maintains flow until boiler safely shut down (~ 30 min).
14. Cooling tower fan #1 and pump maintained until safe shut down is possible (~30 min).
15. System sensors are monitored and logged throughout shut down until failure point is located, resolved and normal operation is regained.

A complete system fault is the main event that would require an emergency shutdown and use of the diverter stack. The same shutdown procedure would be followed for other unlikely scenarios with specific action taken concerning the cause of the shutdown.

Pursuant to IDAPA 58.01.01.123, I hereby certify that, based on information and belief formed after reasonable inquiry, the statements and information in this application are true, accurate, and complete.

Please feel free to me at 208.938.2680 if you have any questions or need additional information.

Sincerely,

Dynamis Energy, LLC

Christopher Durand, P.E.
Senior Mechanical Engineer

Enclosures

Cc: Shannon Manoulian, JBR Environmental Consultants, Inc
C. Lloyd Mahaffey, CEO
Wade Thomas, SVP, Legal and Finance

ATTACHMENT 1

Scrubber Information and Diagram

DIRECT CONTACT LLC
P.O. Box 2969 Renton, WA 98056 ♦ Ph (425) 235-1723 ♦ Fax (425) 277-5780

May 17, 2012

Dynamis Energy, LLC
776 E. Riverside
Eagle, Idaho 83616

Attention: **Chris Durand, PE Project Engineer**

Reference: **DC062 ADA County, ID – MSW to Energy Project's Heat Recovery/pollution Abatement System**

Subject: **Equipment Supply and Engineering Proposal Revision A**

Dear Chris,

Direct Contact LLC (**DC**) appreciates the opportunity to work with Dynamis Energy LLC (**DE**) on the ADA County MSW to Energy Heat Recovery/Pollution Abatement System.

Background

DE is converting Municipal Solid Waste to Energy in ADA County, ID. The facility generates a bio-syngas via pyrolysis; the syngas is burned in a boiler to produce steam with the steam used to spin a turbine and generate electric power.

The steam exhausting the turbine is condensed and returned to the boiler. The condensate leaving the condenser needs to be heated substantially before returning to the boiler.

The syngas includes some entrained particulate, with a small fraction of acid gases (hydrochloric acid and sulfur dioxide).

DC has the technology and experience to capture a great deal of the waste heat leaving with the flue gas and returning its energy to the plant. In addition to recovering heat, DC can absorb a portion of the acid gases and scrub a portion of the particulates.

Design Conditions

Dynamis and Evergreen Engineering (EE) have developed three cases to be considered: Peak, Normal and Off Peak. These conditions are thoroughly described below. The Site Elevation is 3000-feet above sea level. The Peak condition is the design condition. The gross pollutant loading is proportional to the flue gas mass flow rate for the Normal and Off Peak Conditions using the Peak as a basis.

Case #1-Peak
Flue Gas Generated - Mass Flow Rate = 542,257.91-lb/hr
Flue Gas Stack Temperature = 350°F

Design Conditions (Continued)

Flue Gas Analysis: (Mole-fraction)

Oxygen	0.0579
Nitrogen	0.6797
Carbon Dioxide	0.1058
Argon	0.0083
Water Vapor	0.1484

Gross Pollutants

Sulfur Dioxide	40-lb/hr
Hydrochloric Acid	10-lb/hr
10 Micron & Smaller	7-lb/hr
2.5Micron & Smaller	7-lb/hr

Turbine Exhaust Condenser Condensate
Volumetric Flow = 433-gpm @105°F
Mass Flow = 215,042-lb/hr

Boiler Makeup Water
Volumetric Flow = 6-gpm @60°F
Mass Flow = 3,045 lb/hr

Case #2 Normal
Flue Gas Generated - Mass Flow Rate = 464,314.42-lb/hr
Flue Gas Stack Temperature = 350°F

Flue Gas Analysis: (Mole-fraction)

Oxygen	0.0680
Nitrogen	0.6987
Carbon Dioxide	0.1004
Argon	0.0084
Water Vapor	0.1244

Gross Pollutants

Sulfur Dioxide	34.3-lb/hr
Hydrochloric Acid	8.5-lb/hr
10 Micron & Smaller	6-lb/hr
2.5Micron & Smaller	6-lb/hr

Turbine Exhaust Condenser Condensate
Volumetric Flow = 433-gpm @105°F
Mass Flow = 215,042-lb/hr

Boiler Makeup Water
Volumetric Flow = 5.6-gpm @60°F
Mass Flow = 2,787 lb/hr

ENERGY EFFICIENCY ENVIRONMENT

Design Conditions (Continued)

Case #3-OFF Peak
Flue Gas Generated - Mass Flow Rate = 127,350.73-lb/hr
Flue Gas Stack Temperature = 350°F (assumed)

Flue Gas Analysis: (Mole-fraction)

Oxygen	0.0573
Nitrogen	0.6889
Carbon Dioxide	0.1068
Argon	0.0084
Water Vapor	0.1386

Gross Pollutants

Sulfur Dioxide	9.4-lb/hr
Hydrochloric Acid	2.3-lb/hr
10 Micron & Smaller	1.6-lb/hr
2.5Micron & Smaller	1.6-lb/hr

Turbine Exhaust Condenser Condensate
Volumetric Flow = 100-gpm @105°F
Mass Flow = 50,000-lb/hr

Boiler Makeup Water
Volumetric Flow = 1.7-gpm @60°F
Mass Flow = 856-lb/hr

Scope
DC will provide equipment for a 'heat recovery/pollution abatement system' (HRPAS) that will use the exhaust flue gas as a heat source to add thermal energy to the condensate and boiler makeup water feeding the DA tank. The HRPAS will remove acid gases and particulate from the flue gas. Caustic soda will need to be added to the HRPAS to neutralize hydrolysis products generated or the absorption of acid gases will be limited. Water must be added to the HRPAS. The HRPAS will be a net evaporator of water and liquid water blow down will be necessary to purge salts generated in the hydrolysis of acid gases and the solid particulates scrubbed from the flue gas. The boiler blow down is directed through the vessels (V-01 and V-02) which should be enough water to adequately maintain salt concentrations in the contact water to a point that viscosity and surface tension does not affect mass transfer coefficients adversely. The method of achieving this heat recovery is described below. Please use the process flow diagrams D062-F-01A, -F-01B & -F-01C (for Peak (Design), Normal & Off Peak Conditions respectively) and the Piping & Instrumentation Diagram provided (drawings D062-F03 through F-05) as well as the General Arrangement drawings (D062-G-01 & G-02) to help with the process description.

DC's HRPAS will consist of several unit operations, duct & piping systems, instrumentation with control logic & interlocks performed in a PLC with a HMI. The system will be transparent to the operation of the Boiler.

The project scope for DC is broken into two categories: Engineering and Equipment Supply. Using the process flow diagram as a reference, the scope breaks down as follows:

Component Description	Engineering Responsibility	Equipment Supply
Inlet Gas Duct	DC	Others
HA-01	DC	DC
HA-01's Associated Components Duct and Plenum with wash headers	DC	Others
HX-01	DC	DC
HX-02	DC	Others
F-01 & F-02 Induction Fan & 4160-VAC motors	DC	DC
V-01 & V-02 HRPA	DC	DC
Interconnecting Duct between V-01& V-02 Stack	DC	Others
Pump P-01	DC	Others
Pumps P-02, P-03 & P-04	DC	DC
Valves: All shown on P&I Ds	DC	DC
Piping System inside target shown on P& I Ds	DC	DC
Stack	DC	Others
S-01 Filtration Equipment	Others	Others
All HRPAS Associated Supports and Platforms, Hand Rails & Ladders &/or Stairs	DC	Others
All Concrete Foundation and below grade systems	Others	Others

ENERGY EFFICIENCY ENVIRONMENT

Electrical: All motor control and Variable Speed driver and lighting Conduit routing	Others	Others
Controls and Instrument (including modulated control valves) Package including PCL and HMI	DC	Others
CEMS Flow and Opacity Meters	Others	Others

Gas Flow

Syngas is generated in pyrolysis modules, then combusted in a second combustion unit (by-others). The very hot flue gas passes through a diversion stack (by-others). The flue gas then passes through a boiler with an economizer (by-others). The cooled flue gas leaves the economizer passes through a duct which directs the flue gas to the HRPAS. The flue gas first flows into transition TR-01 where it is evenly distributed, then passes through the washdown header and then enters the indirect heating coil (HA-01), which heats condensate while cooling the exhaust gas. The gas is only cooled to within 30°F or 40°F of its dew point; hence, although very cool, there is no concern of condensation occurring in normal operation. Downstream of HA-01, there is an exhaust wash water separation plenum, which splits the gas flow into two equal streams which are drawn into the induction Fans (F-01 and F-02). From the fans, the exhaust gas passes into two (2) [12.5 ft diameter x 33 ft straight wall with their major axis vertical] DCLLC Hydrothermal Recovery Vessels, (V-01 and V-02).

These vessels are of a special design as not only do they recover heat but they also absorb acid gases & remove particulates. First the flue gas is saturated and adiabatically cooled before entering the gas absorption section of the vessel. Then it passes to the heat recovery section of the vessel and the gas is further cooled before entering the scrubbing section where solid particulate is combined (via impaction and interception) in a coalescing mesh pad that captures solid material within liquid droplets. Most of these droplets are entrained in the gas flow leaving the coalescing mesh pad but captured in the mist elimination mesh pad above. The flue gas leaving the vessel is saturated with most of the acid gases and particulate removed. This cool saturated and relatively clean flue gas from each vessel recombines in the stack and is discharged to atmosphere. As the flue gas flows out the stack, it is monitored for effluent conditions (CEMS, flow and opacity meters are beyond the scope of DC).

Liquid Flow

The heat recovery system heats both turbine condensate (softened water - SW) and reverse osmosis water (RO - boiler feed water). Contact water (named because it is in direct contact with the exhaust gas) is a third flow stream that is part of the system. The contact water (CW) is initially made up of DI water, but as described above, water vapor generated in the combustion of syngas that drives the turbine, condenses in the vessels becoming a major constituent of CW. The contact water will have sodium hydroxide added to maintain a specific pH, approximately 10.5. The acid gas will absorb into the contact water and hydrolyze. The formation of sodium chloride and sodium sulfite will occur as well as sodium

carbonate. Although makeup water (boiler blow down) will vaporize and leave with the flue gas, most of the makeup will flow out of the system purging the salts.

Contact water is circulated around & through the DCLLC Hydrothermal Recovery Vessels. The level of contact water in each vessel's reservoir is equalized using a 10" diameter line between vessels which maintains a common level in both vessels. One vessel has a 'common' overflow and the other vessel has a common reservoir level sensor. The two (2) circulation pumps draw water from both vessels via the equalization line. While either P-02 or P-03 can draw and circulate contact water to either vessel at off peak conditions, at normal flow conditions both pumps operate together. A portion of the contact water is circulated directly to the lower spray headers on the vessels absorption section. The remainder of the circulated contact water passes through a plate & frame heat exchanger (HX-01), cooling the contact water and heating condensate. The cooled contact water is again split: a portion going directly to the spray header on the heat recovery section on the vessels, and the remainder going to the filtering (S-01) system. The filtering system (by others) removes most of the collected particulates. The filtered contact water is used to wash the mist eliminator mesh pad & periodically washing the coalescing mesh pad with its waste stream being directed to the cooling tower (piping, etc is beyond the scope of this offering) . The coalescing mesh pad wash cycle is initiated on high differential pressure across the coalescing mesh pad.

Equipment Details

The heat recovery vessels are designed for non-pressurized service. The vessel's internals will be accessible via standard manways. The vessel shell is to have 1.5-inches of field-installed insulation covered with aluminum sheathing (insulation and sheathing is considered part of the installation service installed in the field by others and is outside the scope of this equipment proposal). All ductwork upstream of HA-01 is carbon steel (between HA-01 & F-01 it is stainless steel). All materials downstream & including the fan's casings & wheels are stainless steel. All piping material for RO water and contact water are stainless steel while softened water piping is carbon steel.

A skid will be located in the vicinity of the heat recovery vessels. The proposed skid system includes: one (1) 50-HP circulating water pump (P-02), one (1) 50-HP circulating water pump (P-03), with associated inlet & outlet piping. It is recommended a plate & frame heat exchanger (HX-01) be located indoors or be insulated completely. The contact lines running between V-01 & V-02 and the skid will be supplied be others.

The boiler makeup water heater HX-02 its condensate circulation pump P-01 are a part of the heat recovery system, but remote to the vessel's and skid. All items associated with boiler makeup heating will be supplied by others. DC will have process design responsibility, but piping design for freeze protection and maintenance accessibility is the responsibility of others.

The contact water in the reservoir of the vessels is maintained at a pH of 10.5 to 11. This is achieved by continuous sampling the pH of contact water exiting the circulation pumps and adding sodium hydroxide solution at P-02 and P-03 suction. The sodium hydroxide solution is presumed at a concentration of 50% water. Others will provide insulated/heat traced piping between the sodium hydroxide storage tank (by others) and the metering pump (P-04). P-04 and the pH sensor will be mounted on the DC skid. The pH sensor will be supplied by others and the pump will be supplied by DC.

The instrumentation & controls process design will be by DC. DC will generate a process description & loop list so the customer's PLC integrator/provider can specify, design & program the PLC. The Motor Control Center and Control Panel, PLC and HMI will be designed and supplied by others. The electrical equipment shall include motor starters for the pumps (P-01 (1-Hp motor @ 460-VAC), P-02 (50-Hp motor

@ 460-VAC), & P-03 (50-Hp motor @ 460-VAC)) and variable speed drives for the fans (F-01 (400-Hp motor @ 4160-VAC) & F-02 (400Hp motor @ 4160-VAC)) & metering pump P-04 (.333-Hp motor @ 460-VAC). Others will provide a control panel will include an RS View HMI providing supervisory & process control with the associated PLC (AB Contrologix) and DC will assist in theses efforts. The location of loop tuning will be decided by the provider.

Power distribution and local disconnects will be supplied (by others) for field distribution to the six (6) usage points: the pumps P-01, P-02, P-03 and P-04 at 480 VAC, the induced draft fans F-01 & F-02 (both of which are 400 HP) at 4160-VAC and 120-volt single phase transformer (30 amps) to be field routed to the control panel.

Process Engineering:
DCLLC will select, size or specify all components shown on the flow diagram with the exception of the filtration system.

Mechanical Engineering:
DCLLC will design / layout all equipment components with the exception of the filtration system and the remote skid for HX-02 & P-01.

Specific Exclusions

- *Electrical:* Supply of specified power requirements to the customer's Motor Control Center (MCC) with its associated motor starters/VFDs for P-01, P-02, P-03, P-04, F-01 & F-02 and from there to the motors, local controls and monitoring instrumentation is by others. All power wiring, conduit, tray, etc. and installation of same is by others.
- *Controls:* Supply of the PLC, HMI, any local control panels and all local instrumentation is by others. All control wiring & conduit as well as all installation of same is by others.
- *Foundation:* Design & supply of the foundation(s) required for the heat recovery vessels, equipment skid(s), etc are by others.
- *Structural:* All structural supports other than the unitary skid underneath the pump/heat exchanger module are by others. This includes vessel access ladders & platforms.
- *Mechanical:* Field items required as part of a complete installation will include the following items by others:
    - Insulated pipe lines used for supply and return hot condensate. The design requires isolation & check valves at the loop connection points, which are to be supplied by the installing contractor.
    - Insulation of V-01 & V-02 (described earlier).
    - Insulated pipe lines used for cool supply and hot return RO water. The design requires isolation & check valves at the connection points to the makeup supply & these are to be included by the installing contractor.
    - Drain/overflow lines from V-01 & V-02 to a client-specified sewer connection.
    - Design & supply of the S-01 Filtration system for contact water with the associated interconnecting piping, vales, etc.
    - Supply of the P-01, HX-02 and all interconnecting piping & valving, etc.

- Low-pressure flue gas inlet ducting for:
  - 1) hot flue gas from the economizer to DCLLC system inlet (with insulation),
  - 2) Cool flue gas from the V-01 & V-02 discharge to atmosphere (via the stack).
- *Permits:* All required permits (building, etc.) are specifically outside the scope of this proposal and to be provided by the client.

Utility Requirements

- Makeup water (RO) must have sufficient pressure to overcome 12-psi across the DCLLC system.
- RO & Softened Water must have sufficient pressure to overcome 20-psi across the DCLLC system's piping & heat exchangers.
- Electrical power (see scope): Transfer Pump P-01: 1-HP, Circulation Pump P-02: 50 HP, Circulation Pump P-03: 50-HP: Sodium Hydroxide Pump P-04: 1/3 HP, Induced Draft Fans F-01 & F-02: 400 HP each.
- Clean (low volume), dry air (90-psig) for pneumatic actuation for control dampers and valves.

Summary of Conditionally Guaranteed Emissions to Atmosphere with operational notes:

Peak Load:

Heat Recovery	31.00-Million BTU/hr
Volumetric Flow	150,865-ACFM @ 125.4°F
Sulfur Dioxide	11.50-lb/hr
Hydrochloric Acid	0.95-lb/hr
2.5 Micron Particle & Small	4.13-lb/hr

Normal Load:

Heat Recovery	30.00-Million BTU/hr
Volumetric Flow	140,935-ACFM @ 124.4°F
Sulfur Dioxide	9.86-lb/hr
Hydrochloric Acid	0.89-lb/hr
2.5 Micron Particle & Small	3.54-lb/hr

Off Peak:

Heat Recovery	8.43-Million BTU/hr
Volumetric Flow	39,100-ACFM @ 134.5°F
Sulfur Dioxide	2.47-lb/hr
Hydrochloric Acid	0.24-lb/hr
2.5 Micron Particle & Small	0.94-lb/hr

Direct Contact LLC will conditionally guarantee the above removal rates at stated Loads (steam generation rates). It is assumed that the constituents, noted above, exist proportionally to the mass flow of flue gas leaving the boiler. We have assumed that the particulate material in the flue gas is generally a solid material, and is not gelatinous or tacky.

Pricing Equipment & Engineering:
One (1) *DCI-HTR*™ Special System with integral acid gas absorption and particulate scrubbing engineering included (shipped loose for field installation) as described above:

Equipment Price: $**2,496,000.00**
F.O.B.: Point of Manufacture, Freight Prepaid & Add
Availability: 36 wks ARO for equipment delivery to site.
Payment Terms: 40% upon receipt of order to be paid upon receipt of invoice
30% upon receipt of materials at the fabrication facility (net 30)
20% upon shipment of equipment to site (net 30)
10% upon successful testing of system (or 90days after completion of DCLLC equipment installation if testing does not occur, whichever occurs first) (net 30)
Taxes: The above pricing includes no duties, taxes, etc. If any are applicable, they are to the account of others.

Start-Up and Training:
DCLLC has included five (5) days for equipment startup as well as five (5) days of training to plant personnel prior to leaving the completed job. As the installation of the equipment is by others, if additional time is required for startup and found not to be due to DCLLC, then the additional time & expenses will be billed at DCLLC's Standard Rates for Field Service then in effect.

Corrosion Guarantee:
All stainless steel non-rotating components are guaranteed for a period of two years from the date of startup or 30 months from date of delivery, whichever is shortest, based on the attached customer provided flue gas chemistry. This guarantee is applicable should significant evidence of corrosion appear while performing its intended purpose. DCLLC will repair or replace these items including parts and labor. The repair and or replacement of the items is the sole remedy provided in this Corrosion Guarantee. All repaired or replaced parts will have the balance of the initial warranty period remaining. All rotating equipment will be limited to the manufacturer's Corrosion Guarantee language, which will be provided upon final selection.

Direct Contact LLC is uniquely qualified to provide our patented equipment designs and complete engineering and project oversight experience as proven at other operations. I look forward to furthering this discussion as soon as your schedule allows. Should you have any questions, please don't hesitate to contact my office.

Thank you for your interest and continued consideration of **Direct Contact LLC.** We look forward to working with you and your colleagues on a project that will enable you to maximize the energy efficiency of the customer's operation.

With *Warmest* Regards,

Bill Carson

Chief Engineer
Direct Contact LLC

Cc: Curt Rothman (DCLLC)
Jim Shields (DCLLC)

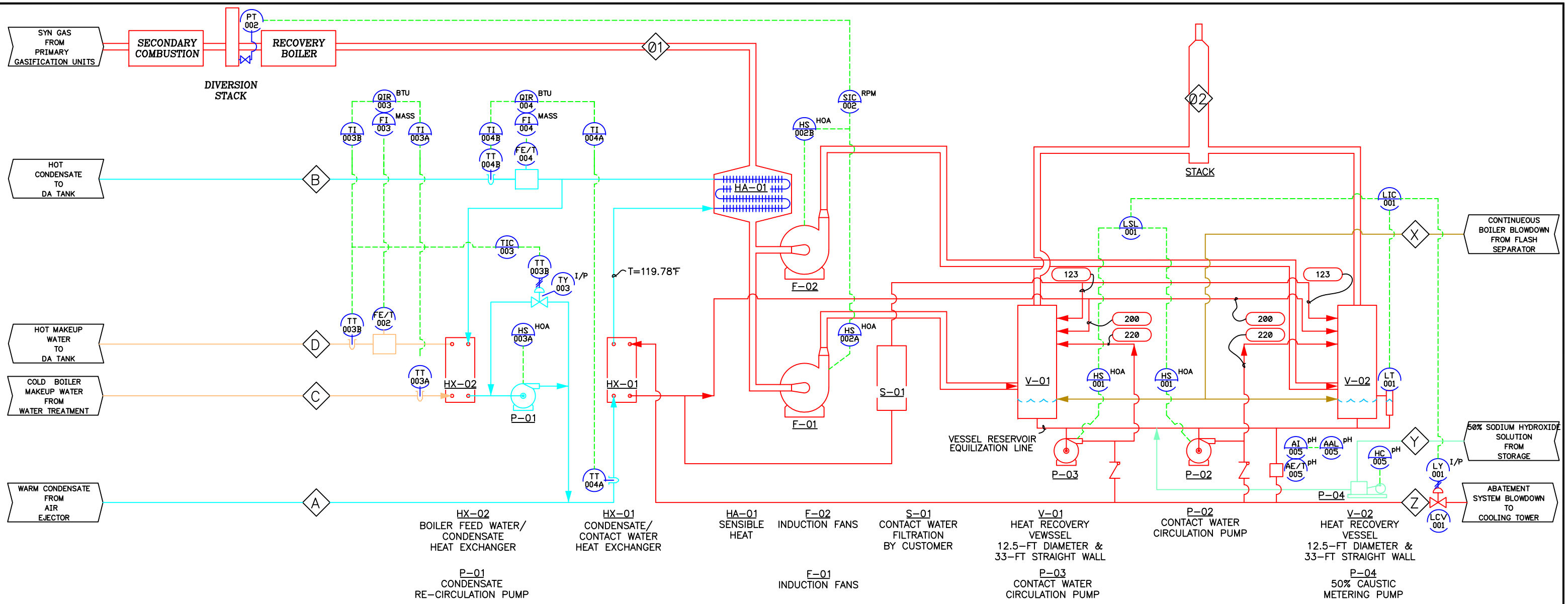

STREAMS		Ø1	Ø2	A	B	C	D	X	Y	Z
COMPONENT		LB/HR	LB/HR	LB/HR	LB/HR	LB/HR	LB/HR	LB/HR	LB/HR	LB/HR
NON-CONDENSIBLES		491,502	491,502	–	–	–	–	–	–	–
SULFUR DIOXIDE		40	10	–	–	–	–	–	–	–
HYDROCLORIC ACID		10	1	–	–	–	–	–	–	–
H2O VAPOR		50,756	50,999	–	–	–	–	–	–	–
SODIUM SULFITE		–	–	–	–	–	–	–	–	59.0
SODIUM CHLORIDE		–	–	–	–	–	–	–	–	14.5
SODIUM CARBONATE		–	–	–	–	–	–	–	–	–
SODIUM HYDROXIDE		–	–	–	–	–	–	0.04	47.3	0.05
PM2.5 PARTICULATE		7.0	3.98	–	–	–	–	–	–	3.02
LIQUID WATER		–	–	215,042	215,042	3,045	3,045	3,044.96	47.3	2,862.05
TOTAL		542,315	542,515.98	215,042	215,042	3,045	3,045	3,045	94.6	2,938.62
FLOW ACFM/(GPM)		213,451	150,865	(432.9)	(455.5)	(6.0)	(6.4)	(6.4)	(~0.1)	(5.7)
PRESSURE	PSIA	12.88	13.180	–	–	–	–	–	–	–
WET BULB TEMP	°F	136.15	125.24	–	–	–	–	–	–	–
DRY BULB TEMP	°F	350	125.4	105	248.6	60	238.6	261	60	126

LEGEND:

GPM FLOW TAG

GENERAL NOTES:

1) THERMAL SAVING EXPECTED ARE 31-MM BTU/HR.

2) EXPECTED REMOVAL OF SULFUR DIOXIDE IS 75%

3) EXPECTED REMOVAL OF HYDROCHLORIC ACID IS 90%.

4) EXPECTED REMOVAL OF PM2.5 PARTICLES AND SMALLER IS 43.1%.

5) DCLLC WILL CONDITIONALLY GUARANTEE 95% OF THE EXPECTED RECOVERYS, CONDITIONS WILL BE DELINEATED IN THE PROJECT PROPOSAL.

6) ONLY INSTRUMENTATION AND CONTROL NECESSARY TO UNDERSTAND THE PROCESS ARE SHOWN.

THIS DRAWING IS THE PROPERTY OF THE DIRECT CONTACT LLC. IT IS LENT AND IS TO BE RETURNED UPON REQUEST. THE DESIGNS AND IDEAS SHOWN HEREON ARE THE PROPERTY OF THE DIRECT CONTACT LLC AND SHALL NOT BE USED, DISCLOSED TO OTHERS, OR COPIED, IN WHOLE OR IN PART WITHOUT WRITTEN PERMISSION.

	DATE	REVISIONS	BY
D	5-18-12	MODIFIED EMISSION TABLE	WDC
C	5-17-12	MODIFIED S-01 DESCRIPTION	WDC
B	4-30-12	ADD FLOW TAG TO VARIOUS CONTACT WATER LINES.	WDC

DIRECT CONTACT LLC
P.O. BOX 2969
RENTON, WASHINGTON 98056
(425)-235-1723

DYNAMIS ENERGY LLC – EAGLE, ID

EQUIPMENT: HEAT RECOVERY POLLUTION ABATEMENT SYSTEM

TITLE: PROCESS FLOW DIAGRAM HEAT RECOVERY/ABATEMENT SYSTEM AT PEAK LOAD

D061 | 1=1 | DWN WDC DATE 4-16-12 | CHK PJS DATE 4-19-12 | DWG NO. D062-F-01A | REV C

05-18-2012

P:\DCI\Projects\D062-Dynamis\Drawing Files +\Latest Version\D062-F-01A revD.dwg