RECEIVED
OCT 25 2016
DEPARTMENT OF ENVIRONMENTAL QUALITY
STATE A Q PROGRAM

Permit-to-Construct Application – Modification to Include Continuous Process

Alternative Environmental Systems

Stantec

Prepared for:
Alternative Environmental Systems
350 NW Recycle Drive
Mayfield, ID 83716
Contact: Rocky Warner
Ph: 208-860-5657

Prepared by:
Stantec Consulting Services, Inc.
7669 W. Riverside Drive, Suite 101
Boise, ID 83714
Contact: Cheryl Robinson, P.E.
Ph: 208-853-0883

October 19, 2016

Sign-off Sheet

This document entitled Permit-to-Construct Application – Modification to Include Continuous Process was prepared by Stantec Consulting Services Inc. ("Stantec") for the account of Alternative Environmental Systems (AES). Any reliance on this document by any third party is strictly prohibited. The material in it reflects Stantec's professional judgment in light of the scope, schedule and other limitations stated in the document and in the contract between Stantec and the Client. The opinions in the document are based on conditions and information existing at the time the document was published and do not take into account any subsequent changes. In preparing the document, Stantec did not verify information supplied to it by others. Any use which a third party makes of this document is the responsibility of such third party. Such third party agrees that Stantec shall not be responsible for costs or damages of any kind, if any, suffered by it or any other third party as a result of decisions made or actions taken based on this document.

Prepared by _____
(signature)

Cheryl Robinson, P.E.

Reviewed by *Stephen West*

_____
(signature)

Stephen West

Daniel Heiser

Reviewed by _____
(signature)

Daniel Heiser, P.E.

Stantec

Table of Contents

1.0 INTRODUCTION 1.1

2.0 PROCESS DESCRIPTION 2.1
2.1 EMISSIONS SOURCES 2.4
2.2 CRITERIA POLLUTANT EMISSIONS 2.5
2.2.1 Pre-Project Emissions 2.5
2.2.2 Post-Project Emissions 2.6
2.2.3 Change in Emissions 2.7
2.2.4 Below Regulatory Concern for Dispersion Modeling 2.8
2.3 TOXIC AIR POLLUTANTS 2.9
2.3.1 Pre-and Post-Project TAPs Emissions 2.9
2.3.2 Net TAPs Emissions and Ambient Impacts 2.9

3.0 REGULATORY APPLICABILITY 3.1
3.1 STATE REGULATORY APPLICABILITY 3.1
3.1.1 Certification of Documents 3.1
3.1.2 Excess Emissions 3.2
3.1.3 Ambient Air Quality Standards for Specific air Pollutants 3.2
3.1.4 Toxic Air Pollutants 3.2
3.1.5 New Source Performance Standards 3.2
3.1.6 National Emission Standards for Hazardous Air Pollutants 3.2
3.1.7 Open Burning 3.2
3.1.8 Visible Emissions 3.2
3.1.9 Rules for Control of Fugitive Dust 3.3
3.1.10 Fuel Burning Equipment - Particulate Matter 3.3
3.1.11 Particulate Matter - Process Weight Limitations 3.3
3.1.12 Odors 3.4
3.2 FEDERAL REGULATORY APPLICABILITY 3.4
3.2.1 National Ambient Air Quality Standards (NAAQS) 3.4
3.2.2 Title V (Part 70) Operating Permit 3.5
3.2.3 National Emission Standards for Hazardous Air Pollutants (NESHAPs) 3.5
3.2.4 Prevention of Significant Deterioration (PSD) Requirements 3.5
3.2.5 New Source Performance Standards (NSPS) 3.5
3.2.6 Acid Rain Requirements 3.5
3.2.7 Risk Management Programs for Chemical Accidental Release Prevention 3.6

LIST OF TABLES

Table 2-1 Pre-Project Emissions 2.6
Table 2-2 Pre-Project Emissions 2.6
Table 2-3 Post-Project Emissions 2.7
Table 2-4 Post-Project Emissions 2.7

Table 2-5 Change in Emissions 2.8
Table 2-6 Change in Emissions 2.8
Table 3-1 State Regulatory Applicability Summary 3.1
Table 3-2 Federal Regulatory Applicability Summary 3.4

LIST OF APPENDICES

APPENDIX A SITE MAP A.1

APPENDIX B DEQ PTC FORMS AND CHECKLISTS B.1

APPENDIX C EMISSION INVENTORY C.1

APPENDIX D MANUFACTURER AND LABORATORY DATA D.1

1.0 INTRODUCTION

Alternative Environmental Systems, LLC (AES), operates this existing reprocessing facility located at 350 NW Recycle Drive near Mayfield, Elmore County, Idaho. As shown in Figure 1-1, the active facility occupies a small rectangular portion (~300 ft x 370 ft) of a 120-acre site off Simco Road just south of Interstate 84.[1] The approximate UTM coordinates at the center of the main process building are 584.20 kilometers (km) Easting and 4793.61 km Northing in Zone 11 (datum WGS84). The facility recycles tires and other carbon based offal into marketable products using a proprietary pyrolysis system. The primary NAICS Code is 423930, Recyclable Material Merchants Wholesalers.

Figure 1-1. AES LOCATION

A site map is included as Appendix A, with DEQ forms and checklists provided in Appendix B. A summary of the emission inventory is included as Appendix C, with the detailed inventory provided electronically in an Excel spreadsheet. Manufacturer Specifications and Syngas Laboratory Analyses are included as Appendix D. Electronic copies of the May 2015 modeling files are included with the emissions inventory on the CD submitted with this application.

[1] Elmore County, Idaho Parcel Information System, accessed May 29, 2016 at http://data.idahoparcels.us/www/rib/elmore.html

2.0 PROCESS DESCRIPTION

The facility recycles tires and other carbon-based offal using a proprietary pyrolysis system. The process flow diagram is depicted in Figure 1-2.

Step 1. Feed materials are delivered by truck and are first inspected for debris and other residuals prior to processing. The facility currently purchases shredded feedstock, but plans to add a tire shredder (Step 1) to the onsite process equipment in the near future.

Step 2a. Existing Batch Process: Two chambered "retort" reactors.

In the existing batch process, shredded materials are conveyed into two retort chambers. Each retort is then sealed and purged with nitrogen gas (N_2) at 12.5 cubic feet per minute (cfm) at a pressure of 5 pounds per square inch (psi) to provide an inert atmosphere for the pyrolysis process. The N_2 purge continues throughout the process. Each chamber is heated by three external burners fueled by ultra-low sulfur diesel (ULSD), which are positioned within a refractory chamber constructed around the bottom, top and sides of each retort vessel.

The reactors come to temperature on a moderate curve. Oil production begins early—at roughly 120 degrees Celsius (°C)—and drops off slowly as the process continues. Once the reactors reach an optimal temperature, that temperature is maintained for the duration of the cycle. The oils are collected and dispensed in a series of condensing vessels. Both the Stage 1 and Stage 2 condensers employ a closed loop water/glycol cooling system to maintain desired temperatures. The remaining non-condensables (the synthetic gas, or syngas) pass through the condensers and are conveyed through a proprietary scrubber that removes hydrogen sulfide (H_2S) from the stream prior to entering the Flare. The process is complete when syngas production has stopped, typically after eight hours.

Each retort has a capacity of approximately 3,000 pounds of feed material per batch. Maximum production using this batch process is limited to two 12-hour cycles per day, which includes loading, unloading, and cooling of the reactors. A total of 12,000 pounds (6 tons) of feedstock can be processed per day. Because the batch retorts and the continuous process reactors rely on the same downstream equipment, the batch process and the continuous process lines cannot be operated at the same time.

Step 2b. New Continuous Process: Two Lines

Shredded feedstock is continuously fed into a retort reactor in which a nitrogen atmosphere is maintained. The chamber for Reactor No. 1 is heated by one external ULSD-fired burner with a burn rate of three (3) gallons per hour, and the chamber for Reactor No. 2 will be heated by two 3-gallon per hour burners. Maximum capacity for Reactor No. 1 is 400 pounds per hour. Reactor No. 2 is expected to have a capacity of 700 pounds per hour. Once up to temperature,

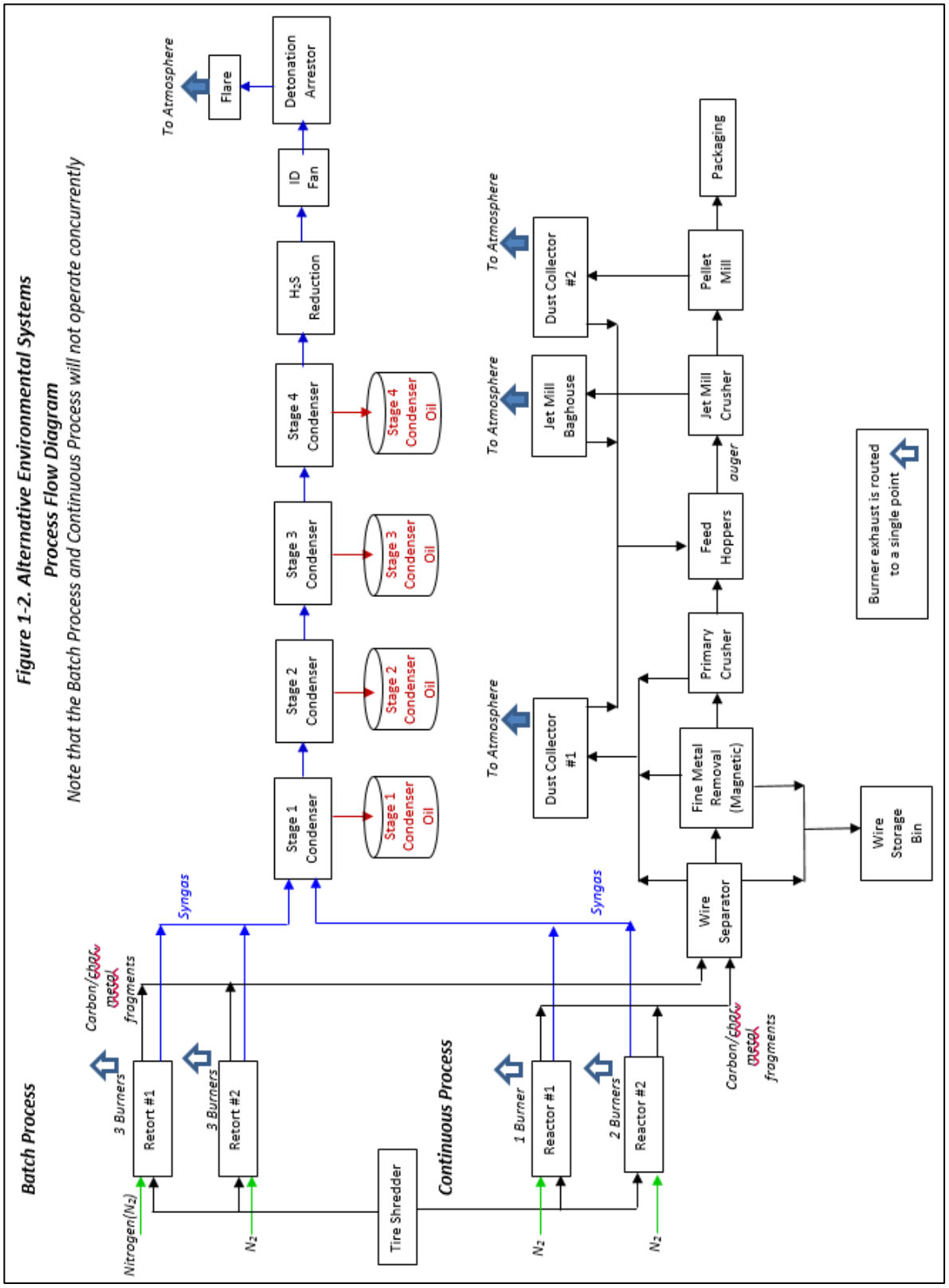

Figure 1-2. Alternative Environmental Systems Process Flow Diagram

Note that the Batch Process and Continuous Process will not operate concurrently

the continuous process has the advantage of producing oils, syngas, and char/product at a steady rate instead of ramping up to a peak at two hours into the process followed by steadily decreasing production until the end of the batch process at eight hours.

Step 3a. Post Processing – Carbon/Char

After cooling, the charge from the batch process is removed and transferred to a wire separation unit (this occurs continuously after Step 2b). In this machine, up to 90% of the steel is removed. Dust collector bag house No. 1 controls fugitive dust emissions from this process. The captured steel is then removed to roll-off bins for transport to metal recyclers. The carbon and the residual steel is conveyed to further fine metal removal through a series of magnetics. It is then primary crushed prior to entering hoppers that feed into a Jet mill for further size reduction. All fugitive dust that is generated from these processes is conveyed to the dust collector bag house as well. These materials are then recycled back into the hoppers that feed the Jet mill.

Once milling begins, a separate Jet mill bag house works in unison with the Jet mill, then transfers the product via rotary airlock either 1) into containers for shipping, or 2) to the Pellet mill, where the crushed material is compressed into small pellets. Fugitive dust generated from placing the material into containers or transferring/compressing in the Pellet mill is conveyed to Dust collector baghouse No. 1 for re-processing. The dust generated in the pellet dryer is collected in baghouse No. 2.

Step 3b. Post Processing – Gaseous Phase

As with the batch retorts, the gaseous phase from the reactors is routed to the series of condensers where condensable oils are drawn off. During the transfers of oil to storage containers, the oil temperature is below 70°F. There are no measurable emissions to air from this material transfer.

The remaining non-condensable gases (syngas) flows through a treatment process that reduces the level of hydrogen sulfide (H_2S) before passing through a detonation arrestor to the Flare.

Because most tires have been "vulcanized" using sulfur compounds, there is an average of between 0.6 and 0.8 percent sulfur by weight in each used tire. The sulfur is converted to hydrogen sulfide (H_2S) during the heating/pyrolysis process. AES uses a proprietary blend of H_2S scavengers—chemicals that react with H_2S to produce environmentally friendly end products at ambient temperatures—that was found to result in the highest removal of H_2S from the syngas. The density and pH of the scavenger solution are measured upon initial filling and recorded. These parameters are measured at regular intervals until the maximum saturation level is reached, at which time the spent solution is drained from the treatment unit and replaced with fresh solution. The nonhazardous spent solution is disposed off-site at a local landfill.

2.1 EMISSIONS SOURCES

Emissions sources at the facility are listed below; new sources of emissions associated with this permitting action are shown in bold.

TIRE SHREDDER

Tire-shredding capacity will be added soon to the facility. The unit shreds used tires into 3-inch and smaller chips, but does not produce small or fine particulate matter. There are no emissions of regulated air pollutants, e.g., fine particulate matter from the tire shredding operations.

BATCH PROCESS RETORTS

The two Retorts were fabricated off site by Industrial Fabrication Co. AES purchased and assembled all associated ductwork, instrumentation, and controls within this system.

The Retorts exhaust stack height is at 41 feet and the duct diameter is 1 foot.

The temperature values are measured in the exhaust stack located just outside the burner chambers via thermocouple. 850 degrees Fahrenheit is median operating value. The exit velocity of 37.78 feet per second (fps) was determined using the F_d Factor from EPA Method 19.

CONTINUOUS PROCESS REACTORS

The first reactor was fabricated onsite. Construction began under a pilot plant exemption in 2015, although construction was not completed until 2016. The second reactor is included in this PTC application, to be purchased and installed within two years of the issuance of the revised permit. Exhaust from the burners is routed to the same stack as for the batch retort burners. The exit velocity for this case was adjusted downward by the ratio of fuel usage for continuous process burners (9 gal/hr ULSD) to the retort burners (30 gal/hr ULSD): 37.78 fps x 9/30 = 11.33 fps.

FLARE

The complete Flare system, Assist gas, Detonation arrestor assembly and PLC were purchased and commissioned by Gulf Coast Environmental, Conroe Texas. Hero Flare from Conroe, Texas fabricated the 60 foot x 6 inch diameter flare and shipped the duct to the AES Mayfield site. The temperature and exhaust flow values are from the Gulf Coast Environmental Specifications of 95.48 fps and 1,400 degrees Fahrenheit. For about an hour at startup, the flare burns a mix of propane (assist gas) and syngas, until sufficient syngas is being produced to sustain the flare.

DUST COLLECTION BAGHOUSES NO. 1 AND **NO.2**

Dust Collection Baghouses were purchased from a United Air Systems representative. The filter material in both baghouses has been upgraded to an UAS rating of MERV 15, which uses a high-efficiency nanofiber technology for capturing particulate matter. Baghouse No. 1 collects

particulate matter (PM) from the wire removal, fine metals removal, and primary crushing steps of the process. Baghouse No. 2 is identical to No. 1 (except it has a larger fan capacity), and collects PM from the **pellet mill dryer.**

AES installed both of these systems along with the exhaust stack duct work. Both stacks are 31 feet tall. The exit diameter for DCBHS No. 1 is 1 foot, with an exhaust flow rate of 4500 cfm. The exit diameter for **DCBHS No. 2** is 1.5 feet, with maximum exhaust flow rate of 7200 cfm at a temperature of 100°F. Neither baghouse is heated. The exhaust air velocity of 95.49 fps for DCBHS No. 1 is from the manufacturer fan Specifications. Emissions from these baghouses were based on collecting 300 pounds per day from each baghouse hopper and baghouse efficiencies of 99.99% for PM_{10} and $PM_{2.5}$.

JET MILL BAG HOUSE

The Jet Mill Baghouse was purchased from Mac Process of Kansas City, Missouri. AES assembled all duct work associated with this baghouse. The baghouse stack exits through the roof of the building at a height of 30 feet above ground level, has a rain cap, and an exit diameter of 0.5 feet. The Baghouse is not heated. The exhaust air velocity was set to 0.003281 fps (0.001 m/s) in accordance with EPA guidance for capped stacks.

EMERGENCY GENERATOR

The Emergency Generator is an MQ Whisper Watt 150 (197 bhp), certified to EPA tier-3 emission levels. The engine generator is limited to using ultra-low sulfur diesel (ULSD) fuel. The Exhaust Duct was fabricated and installed on site by AES. The horizontal exhaust is located on the east side of the building at a height of 10 feet. The exit diameter is 0.33 feet. The Exhaust Temperature of 916°F is from the Generator Manufacturer. The exhaust air velocity was set to 0.003281 fps (0.001 m/s) in accordance with EPA guidance for horizontal stacks.

Electrical power for normal operations is provided by the local utility.

2.2 CRITERIA POLLUTANT EMISSIONS

2.2.1 Pre-Project Emissions

All emissions were established by obtaining data through a records review at the facility, multiple site visits, interviews, and applicable EPA data or other emission factor sources.

Pre-project emissions were taken from Table 2 of the Statement of Basis associated with the current (2015) PTC. These values reflect assuming non-continuous operations of both batch retorts and downstream equipment, and 500 hour-per-year operation of the emergency engine. Tables 2-1 and 2-2 summarize the hourly and annual pre-project emission rates.

Table 2-1 Pre-Project Emissions

Emissions (lb/hr)							
Process	**PM_{10}**	**$PM_{2.5}$**	**NO_x**	**SO_2**	**CO**	**VOC**	**CO_2e**
Pyrolysis Retorts	0.072	0.072	0.72	1.065	0.15	0.017	316.7
Syngas Flare	0.9	0.9	2.13	0.003	2.25	0.164	2,045
DCBHS1	0.013	0.013					
JMBHS	0.011	0.011					
Emergency Engine	0.024	0.024	0.242	0.358	0.05	0.006	228
Total	**1.02**	**1.02**	**3.09**	**1.43**	**2.45**	**0.187**	**2,590**

Table 2-2 Pre-Project Emissions

Emissions (tons per year)							
Process	**PM_{10}**	**$PM_{2.5}$**	**NO_x**	**SO_2**	**CO**	**VOC**	**CO_2e**
Pyrolysis Retorts	0.32	0.32	1.31	1.94	0.27	0.073	669
Syngas Flare	3.94	3.94	9.32	0.036	9.86	0.717	8,957
DCBHS1	0.103	0.103					
JMBHS	0.049	0.049					
Emergency Engine	<0.01	<0.01	0.05	0.08	0.01	0.001	51
Total	**4.42**	**4.42**	**10.68**	**2.02**	**10.14**	**0.791**	**9,677**

2.2.2 Post-Project Emissions

Tables 2-3 and 2-4 summarize the post-project emissions, based on the following assumptions:

Emissions estimates for the continuous process presume AES will operate the process 24 hours per day, 7 days per week, 52 weeks per year for a total of 8,760 hours.

The capacity of Reactor No. 1 is 400 pounds per hour, and the expected capacity for Reactor No. 2 is 700 pounds per hour, for a total of 1100 pounds per hour. The continuous process is expected to produce up to 26,400 pounds of crushed material or pellets per day, combined, from both reactors.

Reactor No. 1 is heated by a ULSD-fired burner with a fuel consumption rating of 3 gallons per hour. Reactor No. 2 will be heated by two 3-gallon per hour burners, for a total ULSD consumption rate equal to 9 gallons per hour.

Flare emissions were calculated presuming the same concentration of pollutants as for the batch process, but scaled down by the ratio of the exhaust flow rate (24 acfm for the continuous process, 646.7 acfm for the batch process). Emissions of SO_2 from the flare were calculated presuming 100% of the sulfur compounds present in the syngas were oxidized to SO_2.

Engine emissions of SO_2 were corrected to reflect maximum fuel sulfur content equal to 0.0015 percent.

Emissions from the two Dust Collector Baghouses were calculated based on producing 300 pounds of recycled material per day, with new filter material efficiency equal to 99.99% for both PM_{10} and $PM_{2.5}$.

Table 2-3 Post-Project Emissions

(lb/hr)							
Process	**PM_{10}**	**$PM_{2.5}$**	**NOx**	**SO_2**	**CO**	**VOC**	**CO_2e**
Pyrolysis Retorts	0.0216	0.0193	0.216	0.002	0.045	0.0051	95
Syngas Flare	0.33	0.33	0.079	0.174	0.084	0.006	75.9
DCBHS1	0.00125	0.00125					
DCBHS1	0.00125	0.00125					
JMBHS	0.011	0.011					
Emergency Engine	0.024	0.022	0.242	0.0021	0.050	0.006	228
Total	**0.093**	**0.088**	**0.537**	**0.178**	**0.179**	**0.017**	**399**

Table 2-4 Post-Project Emissions

(tons per year)							
Process	**PM_{10}**	**$PM_{2.5}$**	**NOx**	**SO2**	**CO**	**VOC**	**CO_2e**
Pyrolysis Retorts	0.09	0.08	0.95	0.01	0.20	0.02	416
Syngas Flare	0.15	0.15	0.35	0.76	0.37	0.03	332
DCBHS1	0.005	0.005					
DCBHS1	0.005	0.005					
JMBHS	0.05	0.05					
Emergency Engine	0.006	0.005	0.050	0.08	0.013	0.03	51
Total	**0.31**	**0.30**	**1.34**	**0.85**	**0.58**	**0.08**	**800**
BRC Thresholds	**1.5**	**1.0**	**4**	**4**	**10**	**4**	**--**

2.2.3 Change in Emissions

Tables 2-3a and b summarize the change in emissions when operating the more efficient continuous process rather than the two batch retorts.

Table 2-5 Change in Emissions

(lb/hr)							
Process	**PM_{10}**	**$PM_{2.5}$**	**NOx**	**SO_2**	**CO**	**VOC**	**CO_2e**
Pyrolysis Retorts	-0.05	-0.04	-0.504	-1.06	-0.105	-0.012	-222
Syngas Flare	-0.87	-0.87	-2.05	0.17	-2.17	-0.16	-1969
DCBHS1	-0.012	-0.012					
DCBHS1	0.00125	0.00125					
JMBHS	0	0					
Emergency Engine	0	0	0	-0.36	0	0	0
Total	**-0.93**	**-0.92**	**-2.56**	**-1.25**	**-2.27**	**-0.17**	**-2191**

Table 2-6 Change in Emissions

(tons per year)							
Process	**PM_{10}**	**$PM_{2.5}$**	**NOx**	**SO2**	**CO**	**VOC**	**CO_2e**
Pyrolysis Retorts	-0.22	-0.20	-0.36	-1.93	-0.07	-0.05	-253
Syngas Flare	-3.80	-3.80	-8.97	0.73	-9.49	-0.69	-8625
DCBHS1	-0.10	-0.10					
DCBHS1	0.005	0.005					
JMBHS	0	0					
Emergency Engine	0	0	0	-0.08	0	0	0
Total	**-4.11**	**-4.08**	**-9.34**	**-1.28**	**-9.56**	**-0.74**	**-8877**

2.2.4 Below Regulatory Concern for Dispersion Modeling

Criteria for determining whether dispersion modeling is required for criteria pollutants are specified in Section 3.1 of the IDEQ Modeling Guideline:

"If a permitting action would qualify for a below regulatory concern (BRC) exemption (Idaho Air Rules Section 221) except for the emissions quantities of some specific criteria pollutants, then modeling is not required for those pollutants having emissions rates below the BRC threshold. If there is an emissions limit or throughput limit in an existing permit that must be changed, then the project would not qualify for a BRC exemption and modeling may be required.

As shown in Table 2-2b above, the emissions associated with using the continuous pyrolysis process are well below the BRC thresholds. The continuous process is new and cannot be operated as the same time as the batch process, so there are no existing permit conditions that must be changed. Emissions associated with adding the continuous process, adding the pellet line and baghouse, and increasing the efficiency of an existing baghouse are below regulatory concern. Modeling for criteria pollutants is not required.

2.3 TOXIC AIR POLLUTANTS (TAPS)

2.3.1 Pre-and Post-Project TAPs Emissions

Using the continuous process rather than the batch retorts results in changes to carcinogenic TAPs emissions from the flare. Pre-permit TAPs emissions were taken from the May 2015 modeling analyses which demonstrated TAPs compliance for the current permit.

Post-project TAPs emissions for the flare were taken from the emissions inventory developed for permitting the continuous pyrolysis option. Post project TAPs emissions from the flare were based on syngas analysis conducted in February 2016. Post-project TAPs emissions from the retort stack were calculated based on reducing the hourly ULSD fuel usage from 30 to 9 gallons per hour.

Table 2-4 Change in Pound per Hour TAPs Emissions

Emission Unit	Nickel	Arsenic	Cadmium	1,3-Butadiene	Benzene	Formaldehyde
Pre-Project Emissions						
Retort/Reactor stack	5.92E-06	1.67E-05	1.25E-05	---	6.42E-06	0.00105
Flare				---	0.0703	---
Total	**5.92E-06**	**1.67E-05**	**1.25E-05**	---	**0.0703**	**0.00105**
Post-Project Emissions						
Retort/Reactor stack	1.77E-06	5.01E-06	3.75E-06	---	1.93E-06	3.15E-04
Flare				0.0222	0.0066	---
Total	**1.77E-06**	**5.01E-06**	**3.75E-06**	**0.0222**	**0.0066**	**3.15E-04**
Net Emissions						
Retort/Reactor stack	-4.14E06	-1.17E-05	-8.75E-06	---	-4.49E-06	-7.35E-04
				0.0222	-0.0637	---
Total	**-4.14E06**	**-1.17E-05**	**-8.75E-06**	**0.0222**	**-0.0637**	**-7.35E-04**

2.3.2 Net TAPs Emissions and Ambient Impacts

As shown in Table 2-4, there is a net decrease in TAPs emissions with this project, except for 1,3-butadiene, which is emitted only from the flare. Dispersion modeling is not required for any TAP except for 1,3-butadiene, which has net emissions greater than the screening emission level for that compound.

The May 1, 2015 modeling analysis modeled the flare with a 20 m/sec exit velocity and an equivalent stack diameter equal to 1.59 feet. An emission rate of 0.0703 pounds per hour of benzene from the flare resulted in a maximum annual ambient impact at the fence line of 0.00243 µg/m^3. These values can be used to calculate a dispersion coefficient for the flare

equal to 0.035 µg/m^3 per pound per hour of pollutant emissions. Using the dispersion coefficient, the maximum annual impact for 1,3-butadiene emissions from the flare would be 7.8E-04 µg/m^3, which is only 22 percent of the acceptable ambient concentration for carcinogens (AACC) of 3.6E-03 µg/m^3 listed in Section 586 of the Idaho Air Rules for this compound.

3.0 REGULATORY APPLICABILITY

A review of applicable State and Federal Rules for this project is provided in Sections 3.1 and 3.2 below.

3.1 STATE REGULATORY APPLICABILITY

A review of applicable requirements of the Rules for the Control of Air Pollution in Idaho is provided in Table 3-1 for this project. Each regulation is described in the sections following the table.

Table 3-1 State Regulatory Applicability Summary

Section	Description	Regulatory Citation	Applicable?
3.1.1	Certification of Documents	IDAPA 58.01.01.123	Yes
3.1.2	Excess Emissions	IDAPA 58.01.01.130-136	Yes
3.1.3	Ambient Air Quality Standards for Specific Air Pollutants	IDAPA 58.01.01.577	Yes
3.1.4	Toxic Air Pollutants	IDAPA 58.01.01.585 and 586	Yes
3.1.5	New Source Performance Standards	IDAPA 58.01.01.590	No
3.1.6	National Emissions Standards for Hazardous Air Pollutants	IDAPA 58.01.01.591	No
3.1.7	Open Burning	IDAPA 58.01.01.600-616	Yes
3.1.8	Visible Emissions	IDAPA 58.01.01.625	Yes
3.1.9	Rules for Control of Fugitive Dust	IDAPA 58.01.01.650	Yes
3.1.10	Fuel Burning Equipment – Particulate Matter	IDAPA 58.01.01.675-681	No
3.1.11	Particulate Matter – Process Weight Limitations	IDAPA 58.01.01.701	No
3.1.12	Odors	IDAPA 58.01.01.775-776	Yes

3.1.1 Certification of Documents

IDAPA 58.01.01.123 requires that all documents, including application forms for permits to construct, records, and monitoring reports submitted to DEQ, contain a certification by a responsible official. AES will comply with this requirement, and the appropriate certifications by a responsible official are being submitted with this application.

3.1.2 Excess Emissions

IDAPA 58.01.01.130-136 requires that any episode of excess emissions be reported to DEQ, where appropriate. AES will abide by all excess emission requirements.

3.1.3 Ambient Air Quality Standards for Specific Air Pollutants

IDAPA 58.01.01.577 establishes ambient air quality standards for specific air pollutants including $PM_{2.5/10}$, Sulfur Dioxide, Ozone, Nitrogen Dioxide, Carbon Monoxide, and Lead. Dispersion modeling was not conducted for criteria pollutants, as described in Section 2.2.4. Additionally, one TAP exceeded the screening emission level (1,3-butadiene). The ambient impact associated with butadiene emissions from the flare is discussed in Section 2.3.2

3.1.4 Toxic Air Pollutants

IDAPA 58.01.01.585 and 586 establishes requirements for compliance with toxic air pollutants. AES evaluated toxic pollutants associated with this project and has demonstrated compliance with the standards. Please refer to Section 2.3 of this document for details.

3.1.5 New Source Performance Standards

New Source Performance Standards (NSPS) in 40 CFR Part 60 apply to new, modified, or reconstructed stationary sources that meet or exceed specified applicability thresholds. There are no NSPS requirements relevant to AES for this permit modification.

3.1.6 National Emission Standards for Hazardous Air Pollutants

The National Emissions Standards for Hazardous Air Pollutants (NESHAPs), 40 CFR 63, Subpart ZZZZ, applies to the emergency engine generator. The regulatory analysis and requirements under this subpart were addressed in the initial permit for this facility.

3.1.7 Open Burning

IDAPA 58.01.01.600 and 616 establishes requirements for open burning. AES does not expect to conduct open burning at the facility; however, AES will comply with the requirements under Section 600-616 if any allowable burning is to be conducted at the facility.

3.1.8 Visible Emissions

IDAPA 58.01.01.625 restricts discharge of air pollutants into the atmosphere which is greater than 20% opacity for a period or periods aggregating more than three (3) minutes in any sixty (60) minute period. AES will comply with this rule by conducting quarterly facility-wide inspections of potential sources of visible emissions, during daylight hours and under normal operating conditions. The inspection will consist of a see/no see evaluation for each potential source. If any visible emissions are observed AES will take corrective action or perform a Method 9 or

Method 22 opacity test in accordance with the procedures outlined in IDAPA 58.01.01.625. AES will keep records onsite documenting the quarterly visible emission inspection or Method 9/22 test conducted.

3.1.9 Rules for Control of Fugitive Dust

IDAPA 58.01.01.625 restricts discharge of air pollutants into the atmosphere which is greater than 20% opacity for a period or periods aggregating more than three (3) minutes in any sixty (60) minute period. AES will comply with this rule by conducting quarterly facility-wide inspections of potential sources of visible emissions, during daylight hours and under normal operating conditions. The inspection will consist of a see/no see evaluation for each potential source. If any visible emissions are observed, AES will take corrective action or perform a Method 9/22 opacity test in accordance with the procedures outlined in IDAPA 58.01.01.625. AES will keep records onsite documenting the quarterly visible emission inspection and Method 9 test conducted.

IDAPA 58.01.01.650 requires that all reasonable precautions be taken to prevent the generation of fugitive dust. AES will comply with fugitive particulate matter regulations.

3.1.10 Fuel Burning Equipment - Particulate Matter

IDAPA 58.01.01.676 restricts emissions from fuel burning sources, which are defined as any furnace, boiler, apparatus, stack and all appurtenances thereto, used in the process of burning fuel for the primary purpose of producing heat or power by indirect heat transfer. The burners associated with the continuous process reactors transfer heat directly to the chambers. Therefore, the rule does not apply.

3.1.11 Particulate Matter - Process Weight Limitations

IDAPA 58.01.01.701 promulgates restrictions on PM for the entire facility based on process weight. Fuel burning equipment at the facility is not subject to this requirement. Sources of PM emissions within the process (material transfers, metals removal, crushing, and milling) are all controlled by baghouses. These sources are subject process weight calculations, as follows, for process weight less than 9,250 pounds per hour:

$$E = 0.045(PW)^{0.60} = 0.045\ (26{,}400 \text{ lb per day} / 24 \text{ hours per day})^{0.60} = 3.00 \text{ lb/hr}$$

Process emissions of PM from baghouses DCBHS1, DCBHS2, and JMBHS are 0.00125, 0.00125, and 0.011 pounds per hour, respectively, for a total equal to 0.0135 pounds per hour.

3.1.12 Odors

IDAPA 58.01.01.775-776 requires no emissions of odorous gases, liquids, or solids to the atmosphere in such quantities as to cause air pollution. AES will comply with this requirement by keeping records of any odor complaints received and will take appropriate action for each complaint which has merit.

3.2 FEDERAL REGULATORY APPLICABILITY

A review of applicable Federal Rules is provided in Table 3-2. The completed federal regulatory applicability FRA form is included in Appendix B.

Table 3-2 Federal Regulatory Applicability Summary

Section	Description	Regulatory Citation	Applicable?
3.2.1	National Ambient Air Quality Standards (NAAQS)- (dispersion modeling)	40 CFR Part 50	No
3.2.2	Title V Operating Permit	40 CFR Part 70	No
3.2.3	Air Pollutants (NESHAPs)	40 CFR Parts 61, 63	No
3.2.4	New Source Review (NSR/PSD)	40 CFR Part 52	No
3.2.5	New Source Performance Standards (NSPS)	40 CFR Part 60	No
3.2.6	Acid Rain Requirements	40 CFR Parts 72–78	No
3.2.7	Risk Management Programs For Chemical Accidental Release Prevention	40 CFR Part 68	No

3.2.1 National Ambient Air Quality Standards (NAAQS)

Primary National Ambient Air Quality Standards (NAAQS) are identified in 40 CFR Part 50 and define levels of air quality, which the United States Environmental Protection Agency (USEPA) deems necessary to protect the public health. Secondary NAAQS define levels of air quality, which the USEPA judges necessary to protect public welfare from any known, or anticipated adverse effects of a pollutant. Examples of public welfare include protecting wildlife, buildings, national monuments, vegetation, visibility, and property values from degradation due to excessive emissions of criteria pollutants.

Specific standards for the following pollutants have been promulgated by USEPA: $PM_{2.5}$, PM_{10}, SO_2, NO_x, CO, ozone, and lead. The AES facility will emit $PM_{2.5}$, PM_{10}, SO_2, NO_x, CO, and VOCs, a

precursor to ozone. No criteria pollutants exceed BRC thresholds for this project, thus a modeling demonstration was not required to demonstrate NAAQS compliance.

3.2.2 Title V (Part 70) Operating Permit

Title V of the Clean Air Act (CAA) created the federal operating permit program. These permitting requirements are codified in 40 CFR Part 70. These permits are required for major sources with a PTE (considering federally enforceable limitations) greater than 100 tpy for any criteria pollutant, 25 tpy for all hazardous air pollutants (HAPs) in aggregate, or 10 tpy of any single HAP. AES is a minor source because the potential to emit any criteria pollutant is less than 100 tons per year, the potential to emit of all HAPs in aggregate is less than 25 tpy, and the potential to emit of any single HAP is less than 10 tpy.

3.2.3 National Emission Standards for Hazardous Air Pollutants (NESHAPs)

National Emission Standards for Hazardous Air Pollutants are discussed in Section 3.1.6 above.

3.2.4 Prevention of Significant Deterioration (PSD) Requirements

Elmore County is designated as in attainment or unclassifiable for all criteria pollutants. Therefore, the prevention of significant deterioration (PSD) regulations codified in 40 CFR Part 52 could potentially apply to the proposed facility. The PSD rule applies to: (1) a new major source that has the potential to emit 100 tons per year or more for any criteria pollutant for a facility that is one of the 28 industrial source categories listed in 40 CFR § 52.21(b)(1)(i)(a); or (2) a new major source that has the potential to emit 250 tons per year or more of a regulated pollutant if the facility is not on the list of industrial source categories; or (3) a modification to an existing major source that results in a net emission increase greater than a PSD significant emission rate as specified in 40 CFR § 52.21 (b)(23)(i); or (4) a modification to an existing minor source that is major in itself. The AES facility does not fall under one of the 28 industrial source categories, nor will the PTE exceed 250 tpy for any regulated pollutant. Therefore, AES is not subject to PSD regulations.

3.2.5 New Source Performance Standards (NSPS)

New Source Performance Standards are discussed in Section 3.1.5 above.

3.2.6 Acid Rain Requirements

The acid rain requirements codified in 40 CFR Parts 72-78 apply only to utilities and other facilities that combust fossil fuel and generate electricity for wholesale or retail sale. The proposed facility will not produce electrical power for sale. Therefore, the facility is not subject to the acid rain provisions and will not require an acid rain permit.

3.2.7 Risk Management Programs for Chemical Accidental Release Prevention

The facility is not subject to the Chemical Accidental Release Prevention Program and will not be required to develop a Risk Management Plan (RMP). Facilities that produce, process, store, or use any regulated toxic or flammable substance in excess of the thresholds listed in 40 CFR Part 68 must develop a RMP. The facility does not store any regulated toxic or flammable substances in excess of the applicable thresholds. An RMP is not necessary for this facility.

APPENDICES

Appendix A SITE MAP

Appendix A Site Map
October 19, 2016

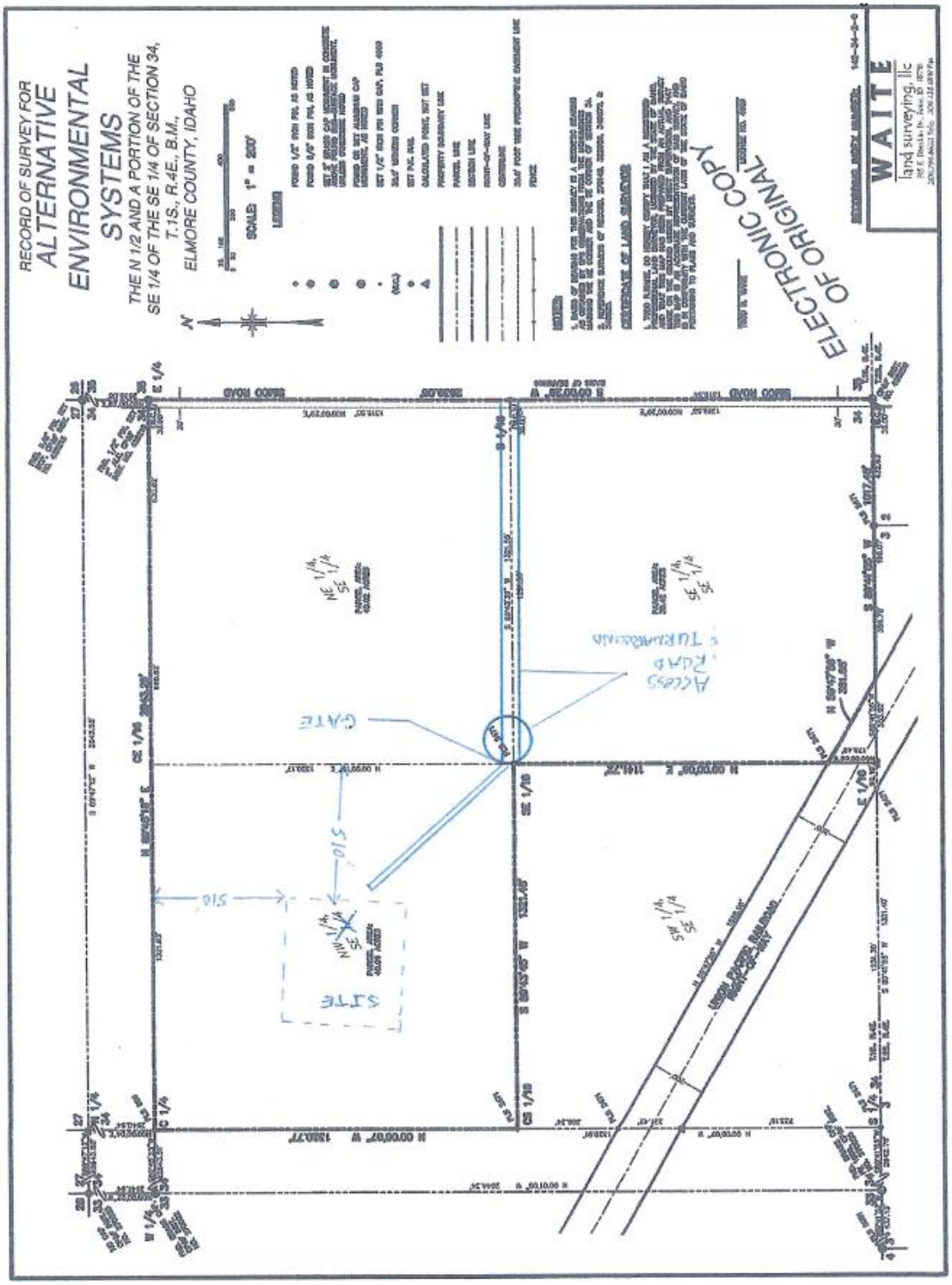

Appendix B DEQ PTC FORMS AND CHECKLISTS

DEQ AIR QUALITY PROGRAM
1410 N. Hilton, Boise, ID 83706
For assistance, call the
Air Permit Hotline – 1-877-5PERMIT

General Information - **Form GI**
4/7/16

Please see instructions on second page before filling out the form.

FACILITY AND PERMIT INFORMATION		
1. Facility Name:		2. Facility ID Number:
Alternative Environmental Systems, LLC, Mayfield Plant		039-00029
3. Brief Project Description:	Permit pilot plant continuous process line, second continuous process line, and pellet mill.	
4. Facility Contact Name:		5. Facility Contact Title:
Rocky Warner		Plant Manager
6. Facility Contact Telephone Number:		7. Facility Contact Email:
208-860-5657		rwarner@aes-idaho.com
8. Mailing address where permit will be sent (street/city/state/zip code):		9. Physical address of facility (if different than mailing address) (street/city/state/zip code):
350 NW Recycle Dr, Mayfield, ID 83716		
10. County Facility is located	Elmore	
11. Is the equipment portable?	☒ No ☐ Yes	
12. NAICS codes	Primary NAICS: 423930	Secondary NAICS (if applicable):
13. Brief business description and principal product produced:	Recycles tires/carbon offal into saleable products.	
14. Describe any contiguous or adjacent facility this company owns or operates:	None	
15. Permit Application Type. Provide Permit Number for existing permit. For a PTC, an application fee is required.	☐ Initial Permit to Construct (PTC) ☒ PTC Modification	PTC No. 2014-0040 Issued Date 09/18/15
	☐ Initial Tier II ☐ Tier II Modification ☐ Tier II Renewal	Tier II No. _____ Issued Date _____
	☐ Initial Tier I ☐ Tier I Administrative Amendment ☐ Tier I Minor Modification ☐ Tier I Significant Modification ☐ Tier I Renewal	Tier I No. _____ Issued Date _____
16. **For Tier I permitted facilities only:** If you are applying for a PTC then you must specify how the PTC will be incorporated into the Tier I permit.	☐ Incorporate PTC at the time of Tier I renewal (IDAPA 58.01.01.209.05.a) ☐ Co-process PTC with Tier I Modification (IDAPA 58.01.01.209.05.b) ☐ Administrative amend the Tier I to incorporate PTC upon applicant's request (IDAPA 58.01.01.209.05.c)	
17. ☒ Check here to request facility draft permit before final issuance.		

Certification of Truth, Accuracy, and Completeness (by Responsible Official)
I hereby certify that based on information and belief formed after reasonable inquiry, the statements and information contained in this and any attached and/or referenced document(s) are true, accurate, and complete in accordance with IDAPA 58.01.01.123 124.

Responsible Official Signature	Plant Manager *Responsible Official Title*	10-19-2016 *Date*
Rocky Warner *Print or Type Responsible Official Name*		

Page 1

DEQ AIR QUALITY PROGRAM
1410 N. Hilton, Boise, ID 83706
For assistance, call the
Air Permit Hotline – 1-877-5PERMIT

Emissions Unit - General **Form EU0**
Revision 4
08/28/08

Please see instructions on page 2 before filling out the form.

IDENTIFICATION		
1. Company Name: Alternative Environmental Systems, LLC	2. Facility Name: AES Mayfield	3. Facility ID No: 039-00029
4. Brief Project Description:	Permit pilot plant continuous process line, second continuous process line, and pellet mill.	

EMISSIONS UNIT (PROCESS) IDENTIFICATION & DESCRIPTION	
5. Emissions Unit (EU) Name:	CONTINUOUS PROCESS LINE 1 - REACTOR NO 1
6. EU ID Number:	
7. EU Type:	☐ New Source ☒ Unpermitted Existing Source ☐ Modification to a Permitted Source -- Previous Permit #: Date Issued:
8. Manufacturer:	
9. Model:	
10.. Maximum Capacity:	400 LB/HR
11. Date of Construction:	2015 - UNDER PILOT PLANT EXEMPTION
12. Date of Modification (if any):	
13. Is this a Controlled Emission Unit?	☐ No ☐ Yes If Yes, complete the following section. If No, go to line 22.

EMISSIONS CONTROL EQUIPMENT			
14. Control Equipment Name and ID:	None		
15. Date of Installation:		16. Date of Modification (if any):	
17. Manufacturer and Model Number:			
18. ID(s) of Emission Unit Controlled:			
19. Is operating schedule different than emission units(s) involved?	☐ Yes	☐ No	
20. Does the manufacturer guarantee the control efficiency of the control equipment?	☐ Yes	☐ No (If Yes, attach and label manufacturer guarantee)	

	Pollutant Controlled					
	PM	PM10	SO_2	NOx	VOC	CO
Control Efficiency						

21. If manufacturer's data is not available, attach a separate sheet of paper to provide the control equipment design specifications and performance data to support the above mentioned control efficiency.

EMISSION UNIT OPERATING SCHEDULE (hours/day, hours/year, or other)	
22. Actual Operation:	8760
23. Maximum Operation:	8760

REQUESTED LIMITS	
24. Are you requesting any permit limits?	☒ Yes ☐ No (If Yes, indicate all that apply below)
☐ Operation Hour Limit(s):	
☒ Production Limit(s):	26,400 LB/DAY, COMBINED FOR REACTORS 1 AND 2
☐ Material Usage Limit(s):	
☐ Limits Based on Stack Testing:	Please attach all relevant stack testing summary reports
☐ Other:	
25. Rationale for Requesting the Limit(s):	Criteria pollutants to remain BRC for modeling

DEQ AIR QUALITY PROGRAM
1410 N. Hilton, Boise, ID 83706
For assistance, call the
Air Permit Hotline – 1-877-5PERMIT

Emissions Unit - General **Form EU0**
Revision 4
08/28/08

Please see instructions on page 2 before filling out the form.

IDENTIFICATION

1. Company Name:	2. Facility Name:	3. Facility ID No:
Alternative Environmental Systems, LLC	AES Mayfield	039-00029

4. Brief Project Description: Permit pilot plant continuous process line, second continuous process line, and pellet mill.

EMISSIONS UNIT (PROCESS) IDENTIFICATION & DESCRIPTION

5. Emissions Unit (EU) Name:	CONTINUOUS PROCESS LINE 2 - REACTOR NO 2
6. EU ID Number:	
7. EU Type:	☒ New Source ☐ Unpermitted Existing Source ☐ Modification to a Permitted Source -- Previous Permit #: Date Issued:
8. Manufacturer:	
9. Model:	
10.. Maximum Capacity:	700 LB/HR
11. Date of Construction:	2017
12. Date of Modification (if any):	
13. Is this a Controlled Emission Unit?	☒ No ☐ Yes If Yes, complete the following section. If No, go to line 22.

EMISSIONS CONTROL EQUIPMENT

14. Control Equipment Name and ID:	None		
15. Date of Installation:		16. Date of Modification (if any):	
17. Manufacturer and Model Number:			
18. ID(s) of Emission Unit Controlled:			
19. Is operating schedule different than emission units(s) involved?	☐ Yes	☐ No	
20. Does the manufacturer guarantee the control efficiency of the control equipment?	☐ Yes	☐ No	(If Yes, attach and label manufacturer guarantee)

	Pollutant Controlled					
	PM	PM10	SO_2	NOx	VOC	CO
Control Efficiency						

21. If manufacturer's data is not available, attach a separate sheet of paper to provide the control equipment design specifications and performance data to support the above mentioned control efficiency.

EMISSION UNIT OPERATING SCHEDULE (hours/day, hours/year, or other)

22. Actual Operation:	8760
23. Maximum Operation:	8760

REQUESTED LIMITS

24. Are you requesting any permit limits?	☒ Yes ☐ No (If Yes, indicate all that apply below)
☐ Operation Hour Limit(s):	
☐ Production Limit(s):	26,400 LB/DAY, COMBINED FOR REACTORS 1 AND 2
☐ Material Usage Limit(s):	
☐ Limits Based on Stack Testing:	Please attach all relevant stack testing summary reports
☐ Other:	
25. Rationale for Requesting the Limit(s):	CRITERIA POLLUTANTS TO REMAIN BRC FOR MODELING

DEQ AIR QUALITY PROGRAM
1410 N. Hilton, Boise, ID 83706
For assistance, call the
Air Permit Hotline – 1-877-5PERMIT

Emissions Units - Industrial Boiler Information **Form EU5**
Revision 5
08/28/08

Please see instructions on page 2 before filling out the form.

IDENTIFICATION		
1. Company Name: Alternative Environmental Systems, LLC	2. Facility Name: AES Mayfield	3 Facility ID No: 039-00029
4. Brief Project Description:	Permit pilot plant continuous process line, second continuous process line, and pellet mill	

EXEMPTION
Please see IDAPA 58.01.01.222 for a list of industrial boilers that are exempt from Permit to Construct requirements.

BOILER (EMISSION UNIT) DESCRIPTION AND SPECIFICATIONS		
5. Type of Request:	☐ New Unit ☒ Unpermitted Existing Unit ☐ Modification to a Unit with Permit #:	
6. Use of Boiler:	☒ % Used For Process ☐ % Used For Space Heat ☐ % Used For Generating Electricity ☐ Other:	
7. Boiler ID Number: REACTOR 1 BURNER	8. Rated Capacity: ☐ Million British Thermal Units Per Hour (MMBtu/hr) ☐ 1,000 Pounds Steam Per Hour (1,000 lb steam/hr)	
9. Construction Date: 2015	10. Manufacturer: Beckett	11. Model: CF500/CF800
12. Date of Modification (if applicable):	13. Serial Number (if available):	14. Control Device (if any): **Note: Attach applicable control equipment form(s)**

FUEL DESCRIPTION AND SPECIFICATIONS				
15. Fuel Type	☒ Diesel Fuel (#2) 3 (gal/hr)	☐ Natural Gas (cf/hr)	☐ Coal (unit: /hr)	☐ Other Fuels (unit: /hr)
16. Full Load Consumption Rate	3 GAL/HR			
17. Actual Consumption Rate	3 GAL/HR			
18. Fuel Heat Content (Btu/unit, LHV)	140,000			
19. Sulfur Content wt%	0.0015			
20. Ash Content wt%		N/A		

STEAM DESCRIPTION AND SPECIFICATIONS				
21. Steam Heat Content	NA	NA		
22. Steam Temperature (°F)	N/A	N/A		
23. Steam Pressure (psi)	N/A	N/A		
24 Steam Type	N/A	N/A	☐ Saturated ☐ Superheated	☐ Saturated ☐ Superheated

OPERATING LIMITS & SCHEDULE		
25. Imposed Operating Limits (hours/year, or gallons fuel/year, etc.):	8760 HR/YR	
26. Operating Schedule (hours/day, months/year, etc.):	8760 HR/YR	
27. NSPS Applicability: ☐ Yes ☒ No	If Yes, which subpart:	

Stantec

DEQ AIR QUALITY PROGRAM
1410 N. Hilton, Boise, ID 83706
For assistance, call the
Air Permit Hotline – 1-877-5PERMIT

Emissions Units - Industrial Boiler Information **Form EU5**
Revision 5
08/28/08

Please see instructions on page 2 before filling out the form.

IDENTIFICATION		
1. Company Name: Alternative Environmental Systems, LLC	2. Facility Name: AES Mayfield	3 Facility ID No: 039-00029
4. Brief Project Description:	Permit pilot plant continuous process line, second continuous process line, and pellet mill	

EXEMPTION
Please see IDAPA 58.01.01.222 for a list of industrial boilers that are exempt from Permit to Construct requirements.

BOILER (EMISSION UNIT) DESCRIPTION AND SPECIFICATIONS		
5. Type of Request:	☒ New Unit ☐ Unpermitted Existing Unit ☐ Modification to a Unit with Permit #:	
6. Use of Boiler:	☒ % Used For Process ☐ % Used For Space Heat ☐ % Used For Generating Electricity ☐ Other:	
7. Boiler ID Number: REACTOR 2 BURNER1	8. Rated Capacity: ☐ Million British Thermal Units Per Hour (MMBtu/hr) ☐ 1,000 Pounds Steam Per Hour (1,000 lb steam/hr)	
9. Construction Date: 2017	10. Manufacturer: Beckett	11. Model: CF500/CF800
12. Date of Modification (if applicable):	13. Serial Number (if available):	14. Control Device (if any): **Note: Attach applicable control equipment form(s)**

FUEL DESCRIPTION AND SPECIFICATIONS				
15. Fuel Type	☒ Diesel Fuel (#2) 3 (gal/hr)	☐ Natural Gas (cf/hr)	☐ Coal (unit: /hr)	☐ Other Fuels (unit: /hr)
16. Full Load Consumption Rate	3 GAL/HR			
17. Actual Consumption Rate	3 GAL/HR			
18. Fuel Heat Content (Btu/unit, LHV)	140,000			
19. Sulfur Content wt%	0.0015			
20. Ash Content wt%		N/A		

STEAM DESCRIPTION AND SPECIFICATIONS				
21. Steam Heat Content	N/A	NA		
22. Steam Temperature (°F)	N/A	N/A		
23. Steam Pressure (psi)	N/A	N/A		
24 Steam Type	N/A	N/A	☐ Saturated ☐ Superheated	☐ Saturated ☐ Superheated

OPERATING LIMITS & SCHEDULE	
25. Imposed Operating Limits (hours/year, or gallons fuel/year, etc.):	8760 HR/YR
26. Operating Schedule (hours/day, months/year, etc.):	8760 HR/YR
27. NSPS Applicability: ☐ Yes ☒ No	If Yes, which subpart:

Stantec

DEQ AIR QUALITY PROGRAM
1410 N. Hilton, Boise, ID 83706
For assistance, call the
Air Permit Hotline – 1-877-5PERMIT

Emissions Units - Industrial Boiler Information **Form EU5**
Revision 5
08/28/08

Please see instructions on page 2 before filling out the form.

IDENTIFICATION		
1. Company Name: Alternative Environmental Systems, LLC	2. Facility Name: AES Mayfield	3 Facility ID No: 039-00029
4. Brief Project Description:	Permit pilot plant continuous process line, second continuous process line, and pellet mill	

EXEMPTION
Please see IDAPA 58.01.01.222 for a list of industrial boilers that are exempt from Permit to Construct requirements.

BOILER (EMISSION UNIT) DESCRIPTION AND SPECIFICATIONS		
5. Type of Request:	☒ New Unit ☐ Unpermitted Existing Unit ☐ Modification to a Unit with Permit #:	
6. Use of Boiler:	☒ % Used For Process ☐ % Used For Space Heat ☐ % Used For Generating Electricity ☐ Other:	
7. Boiler ID Number: REACTOR 2 BURNER2	8. Rated Capacity: ☐ Million British Thermal Units Per Hour (MMBtu/hr) ☐ 1,000 Pounds Steam Per Hour (1,000 lb steam/hr)	
9. Construction Date: 2017	10. Manufacturer: Beckett	11. Model: CF500/CF800
12. Date of Modification (if applicable):	13. Serial Number (if available):	14. Control Device (if any): **Note: Attach applicable control equipment form(s)**

FUEL DESCRIPTION AND SPECIFICATIONS				
15. Fuel Type	☒ Diesel Fuel (#2) 3 (gal/hr)	☐ Natural Gas (cf/hr)	☐ Coal (unit: /hr)	☐ Other Fuels (unit: /hr)
16. Full Load Consumption Rate	3 GAL/HR			
17. Actual Consumption Rate	3 GAL/HR			
18. Fuel Heat Content (Btu/unit, LHV)	140,000 Btu/gal			
19. Sulfur Content wt%	0.0015			
20. Ash Content wt%		N/A		

STEAM DESCRIPTION AND SPECIFICATIONS				
21. Steam Heat Content	NA	NA		
22. Steam Temperature (°F)	N/A	N/A		
23. Steam Pressure (psi)	N/A	N/A		
24 Steam Type	N/A	N/A	☐ Saturated ☐ Superheated	☐ Saturated ☐ Superheated

OPERATING LIMITS & SCHEDULE		
25. Imposed Operating Limits (hours/year, or gallons fuel/year, etc.):	8760 HR/YR	
26. Operating Schedule (hours/day, months/year, etc.):	8760 HR/YR	
27. NSPS Applicability: ☐ Yes ☒ No	If Yes, which subpart:	

DEQ AIR QUALITY PROGRAM
1410 N. Hilton, Boise, ID 83706
For assistance, call the
Air Permit Hotline – 1-877-5PERMIT

Baghouse Control Equipment **Form BCE**
Revision 6
2/18/10

Complete this form for each baghouse. Please see instructions on page 2 before filling out the form.

IDENTIFICATION	
1. Company Name	2. Facility Name:
Alternative Environmental Systems, LLC	AES Mayfield
3. Brief Project Description: Permit pilot plant continuous process line, second continuous process line, and pellet mill.	

BAGHOUSE INFORMATION		
4. Baghouse Manufacturer: UAS	5. Baghouse Model: MERV 15	6. Baghouse Equipment ID: DCBHS2

7 (a). Baghouse particulate matter emission concentration. **Note: Provide information in 7(a)-(c) or answer question #8 below.**	____ gr/dscf	*Manufacturers typically provide guarantees in grains per dry standard cubic foot (gr/dscf). Provide a copy of the guarantee, or other documentation, with the application along with a description of the types of bags that must be used to achieve the emission concentration.* ***Emission concentrations less than 0.01 gr/dscf will receive additional scrutiny by DEQ and a source test of the baghouse may be required.*** *If a guarantee is not provided then you must document how you obtained the emission concentration. Without documentation the application is not complete.*
7 (b). Percentage PM_{10} Or Provide PM_{10} Emission Concentration	99.99 % ____ gr/dscf	*What percentage of the PM concentration listed in question #7(a) is PM_{10}. You must provide documentation as to how the percentage was determined (i.e per the baghouse manufacturer). Without documentation the application is not complete.*
7 (c). Baghouse flow rate	7200 dscfm	*Provide the baghouse flow rate in dry standard cubic feet per minute. Actual cubic feet per minute may be given in lieu of dscfm* ***if it is documented*** *that moisture content is insignificant. You must provide documentation as to how this flow rate was determined (i.e. per the exhaust fan manufacturer, combustion evaluation, etc.). Without documentation the application is not complete.*
8. Baghouse particulate matter control efficiency. **Note: Not needed if section #7 is completed.**	99.99 % PM control 99.99 % PM_{10} control	*Applicant's providing the control efficiency of the baghouse must provide control efficiency for both PM and PM_{10}. Provide a copy of the control efficiency documentation with the application. Documentation must include a description of the types of bags that must be used to achieve the control efficiency. Without documentation the application is not complete.*
9. Is the baghouse equipped with a bag leak detector?	☐ Yes ☒ No	*If a bag leak detector is installed provide documentation on the leak detector, including; how the leak detector functions and what level of the output signal indicates that a bag is leaking. Without documentation the application is not complete.*

NSPS/NESHAP Regulation Review and Applicability Form **FRA**

IDAHO DEPARTMENT OF ENVIRONMENTAL QUALITY
AIR QUALITY DIVISION
1410 N. Hilton, Boise, ID 83706
For assistance, call the
Air Permit Hotline – 1-877-5PERMIT

Preapplication Meeting Information Form FRA (Federal Requirements Applicability) - Regulatory Review

In each box in the table below, CTRL+click on the blue underlined text for instructions and information.

IDENTIFICATION	
1. Company Name: Alternative Environmental Systems, LLC	2. Facility Name: AES Mayfield
3. Brief Project Description: Permit pilot plant continuous process line, second continuous process line, and pellet mill.	
APPLICABILITY DETERMINATION	
4. List all applicable subparts of the New Source Performance Standards (NSPS) (40 CFR part 60). List all non-applicable subparts of the NSPS which may appear to apply to the facility but do not. Examples of NSPS-affected emissions units include internal combustion engines, boilers, turbines, etc. Applicant must thoroughly review the list of affected emissions units.	List of all applicable subpart(s): List of all non-applicable subpart(s) which may appear to apply but do not: ☑ Not Applicable
5. List applicable subpart(s) of the National Emission Standards for Hazardous Air Pollutants (NESHAPs) (40 CFR part 61 and 40 CFR part 63). List all non-applicable subparts of the NESHAP which may appear to apply to the facility but do not. Examples of affected emission units include solvent cleaning operations, industrial cooling towers, paint stripping and miscellaneous surface coating. Reference EPA's webpage on NESHAPs for more information.	List of all applicable subpart(s): List of all non-applicable subpart(s) which may appear to apply but do not: ☐ Not Applicable 40 CFR 63, Subpart ZZZZ
6. For each subpart identified above, conduct a complete regulatory analysis using the instructions and referencing the example on the following pages. **Note** - Regulatory reviews must be submitted with sufficient detail so that DEQ can verify applicability and document in legal terms why the regulation does or does not apply. Regulatory reviews submitted with insufficient detail will be determined incomplete.	☐ A detailed regulatory review is provided (Follow instructions and example). ☑ DEQ has already been provided a detailed regulatory review. Give a reference to the document including the date. P2014.0040 application (2014) and SOB (9/28/15)

THIS PAGE INTENTIONALLY LEFT BLANK

Appendix C EMISSION INVENTORY

The detailed emission inventory is contained in an Excel spreadsheet submitted with this application. A summary of post-project emissions is provided in Section 2 of this application.

Stantec

FLARE SO_2 EMISSIONS - PRESUME 100% CONVERSION TO SO_2

CARBONYL SULFIDE

$$2COS + 3O_2 \rightarrow 2CO_2 + 2SO_2$$

$$\left(\frac{0.0314\ lb}{hr} \cdot \frac{1100}{300}\right) \cdot \frac{lb\text{-}mol\ COS}{60.075\ lb\ COS} \cdot \frac{lb\text{-}mol\ SO_2}{lb\text{-}mol\ COS} \cdot \frac{64\ lb}{lb\text{-}mol\ SO_2} = \boxed{0.12\ lb/hr\ SO_2}$$

THIOPHENES

$C_4H_4S + O_2 \rightarrow$ COMPLEX REACTION

PRESUME 1 mol thiophene(s) → 1 mol SO_2

DIMETHYL DISULFIDE

$$CH_3SSCH_3 + 4O_2 \rightarrow 2CO_2 + 2SO_2 + 3H_2$$

$$\left(\frac{0.00081\ lb}{hr} \cdot \frac{1100}{300}\right) \cdot \frac{lb\text{-}mol\ CH_3SSCH_3}{94.2\ lb} \cdot \frac{2\ lb\text{-}mol\ SO_2}{lb\text{-}mol\ CH_3SSCH_3} \cdot \frac{64\ lb}{lb\text{-}mol\ SO_2} = \boxed{0.004\ lb/hr\ SO_2}$$

THIOPHENE, 3-METHYL THIOPHENE, 2,5-DIMETHYL THIOPHENE

@ 300 lb/hr:	0.0092,	0.0023,	0.0066	lb/hr	=	0.019 lb/hr
@ 1100 lb/hr:	0.034,	0.012,	0.024	lb/hr	=	0.070 lb/hr

minimum mole weight = thiophene = 84

$$\left(\frac{0.070\ lb}{hr}\right) \cdot \frac{lb\text{-}mol\ TH}{84\ lb} \cdot \frac{lb\text{-}mol\ SO_2}{lb\text{-}mol\ TH} \cdot \frac{64\ lb}{lb\text{-}mol\ SO_2} = \boxed{0.05\ lb/hr\ SO_2}$$

TOTAL $\boxed{0.174\ lb/hr\ SO_2}$

Appendix D MANUFACTURER AND LABORATORY DATA

United Air Specialists, Inc – Cartridge Filters

Eurofins Air Toxics, 2/19/2016, Syngas Analysis, ASTM D-5504

Eurofins Air Toxics, 2/27/16, Syngas Analysis, ASTM D-1945

Eurofins Air Toxics, 2/29/16, Syngas Analysis, TO-15 Sulfur Compounds

Measured FLARE Stack Parameters

United Air Specialists, Inc.
a CLARCOR company

Advanced Nanofiber Filtration Technology

TECHNICAL DATA

Tel: 888-515-8800

FILTER CARTRIDGE SPECIFICATIONS

ITEM NUMBER: 33-10089

Dimensions:	**Height:**	26″
	Outside Diameter:	**13.84"**
	Inside Diameter:	**9.479″**
Top End Cap:	**Material:**	**Electro Galvanized (22 ga)**
	Style:	**Open**
Bottom End cap:	**Material:**	**Electro Galvanized (22 ga)**
	Style:	**Open**
	Bolt Hole:	
Gasket:	**1/2" x 1/2" x 11.75" ID isoprene sponge applied on top cap**	
Inner Retainer:	**Electro galvanized expanded metal 3/8" x 5/8" (9.53 mm x 15.88 mm) 72% open area**	
Outer Retainer:	**Electro galvanized expanded metal 3/8" x 5/8" (9.53 mm x 15.88 mm) 72% open area**	
Filter Media Area:	**254 ft²**	
Pleat Count:	**368 +/- 2**	
Media Type:	**Nanofiber Technology**	
Permeability:	**20 cfm/ft² @ 0.5" w.g.** **160 L/sec/m² @ ΔP 20 mm w.g.**	
Maximum Temperature:	**180° F (82.22° C)**	
Minimum Efficiency Reporting Value:	**Merv 15 @ 500 cfm**	
Initial Efficiency:	**99.999% @ 0.5 micron**	

ISO 9001:2000 Registered

United Air Specialists, Inc.

a CLARCOR company

Cartridge Filters

featuring ProTura® Nanofiber technology

DUST COLLECTOR REPLACEMENT FILTERS

Clean air. It's what we do.®

Stantec

Discover the difference in performance and value

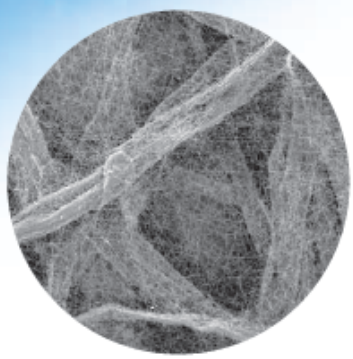

ProTura® Nanofiber surface layer at 600x magnification

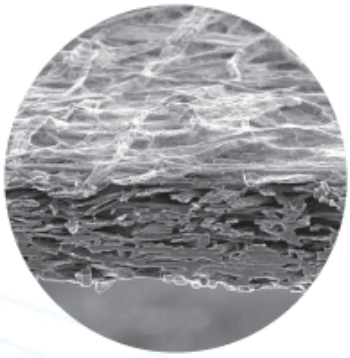

ProTura® Nanofiber surface treatment provides an ultra-thin, web-like coating

UAS CARTRIDGE FILTERS—INVEST IN THE BEST

Keep your dust collectors running efficiently and energy smart with high-quality cartridge filters from United Air Specialists. Available in an assortment of media—including ProTura® Nanofiber—UAS cartridge filters lead the industry in performance, efficiency and value. Whether innovating new filtration media, improving cartridge filter performance or designing and manufacturing specialty filters, UAS delivers the highest quality and value-based solution.

Keep in mind that not all cartridge filters are created equal. Low-cost commodity filters typically have a shorter filter life cycle, lower efficiency rating and actually contribute to an increase in the energy demands of a dust collection system. In the long run, use of generic filters drives up operational costs due to the need for more frequent filter replacements, increased compressed air consumption and higher maintenance.

THE NEW STANDARD IN FILTRATION TECHNOLOGY

Nanofiber technology has been independently proven to achieve higher initial efficiency, cleaner air, lower pressure drop and greater energy savings than commodity filter media. This is accomplished by applying an extremely fine web-like coating of fibers onto the surface of UAS' cartridge filter media. The coating, or nanofiber layer, then keeps dust on the filter's surface so it can be easily removed during the compressed air cleaning cycle. As a result, users benefit from several advantages, including:

- **Capture of submicron particles** and reduction of dust collector emissions for cleaner and safer workplace air
- **Superior surface-loading technology** to enhance dust cake release, leading to extended filter life
- **Better cleaning efficiency** with fewer pulses and significantly less compressed air usage
- **Lower pressure drop** over the life of the filter and less overall energy cost to operate the system

Nanofiber technology has been independently proven to achieve higher initial efficiency than commodity filter media.

Clean air. It's what we do.®

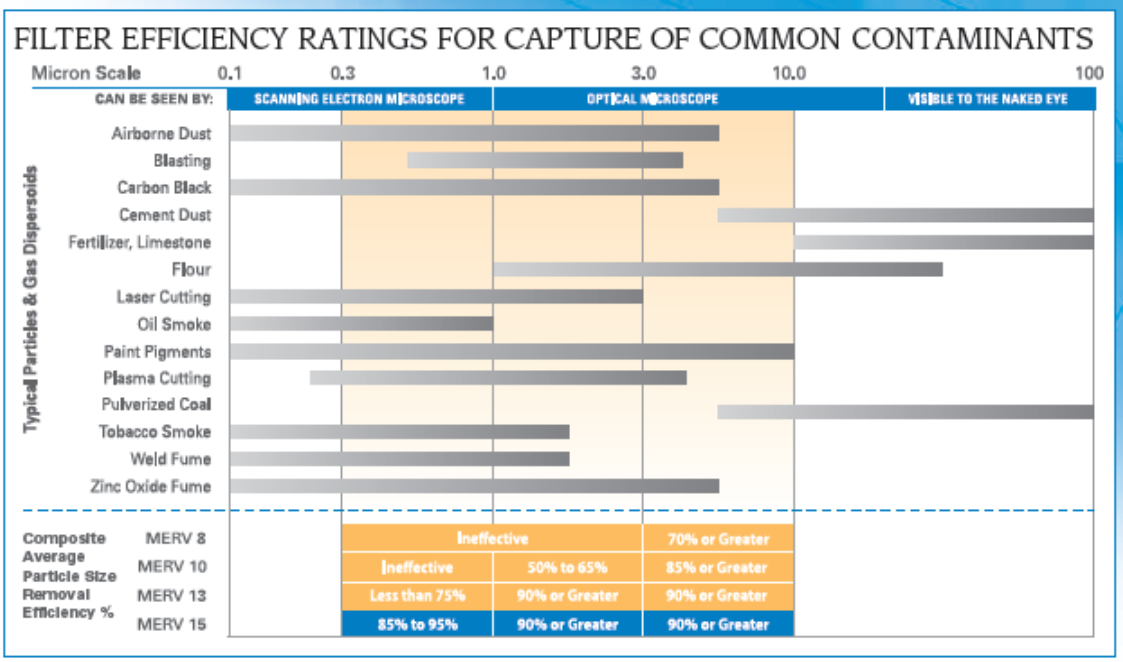

UNDERSTANDING MERV RATINGS

The industry's most accurate test method to measure a cartridge filter's efficiency is ASHRAE 52.2, which is the method for testing general ventilation air-cleaning devices for removal efficiency by particle size. Using this benchmark, filters are assigned a MERV (Minimum Efficiency Reporting Value) rating to determine how well they capture dust based on particle size. The higher the MERV rating, the more efficient the filter is at removing smaller particulate.

Although MERV is important, it can also be misleading. A filter may achieve a high MERV rating but result in higher pressure drop. So be aware of filters that use restrictive surface layers to boost efficiency as they ultimately lead to an increase in pressure and frequent filter replacement.

ProTura® Nanofiber cartridge filters not only offer a MERV 15 rating but also deliver the ultimate combination of high efficiency, low operating costs and longer filter life.

Can MERV Ratings Determine Dust Collector Performance?

MERV ratings are only an indication of a dust collector's filter efficiency while in contrast dust collector performance is measured through total emissions which are the result of ongoing dust accumulation, operating pressure and filter cleaning cycles. Emissions are minimized by retaining dust on the media surface making it easier and less frequent to clean off. Therefore, the best filter for industrial dust collectors will offer high efficiency, low pressure drop and excellent surface-loading capacity to reduce emissions, lower operating costs and ensure longer filter life.

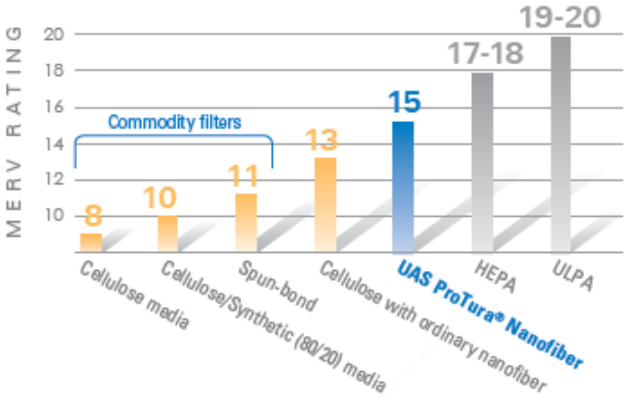

Independent lab testing has certified ProTura® Nanofiber filters at MERV 15, which means they are up to 95% efficient on 0.3 to 1.0 micron size dust.

www.uasinc.com

Stantec

SELECTING THE RIGHT FILTER MEDIA

Consider these factors to help you choose the best filter media for your industrial process

Efficiency Rating
Efficiency of the filter as it relates to dust particle size

Surface-Loading Capacity
Ability to form and easily clean a dust cake on the media surface

Pressure Drop
Lower resistance to airflow over the life of the filter uses less energy

Environmental Conditions
Ambient air characteristics that may affect the filter

Other Resources
Enhancements to increase efficiency, durability, corrosion resistance and filter life

FILTER OPTIONS

Filter Media	Special Characteristics	U.S. Efficiency Rating (MERV)*	European Efficiency Rating**	Surface-Loading Capacity	Pressure Drop	Washable
ProTura® Nanofiber	High-efficiency ProTura® Nanofiber media provides superior performance on extremely fine dusts < 1 micron. Also provides excellent surface-loading and particle release.	15	BIA M EN 779-F9	Excellent	Lower	No
ProTura® Nanofiber Fire Retardant (FR)	Same as ProTura® Nanofiber media with the added benefit of flame retardant properties	15	BIA M EN 779-F9	Excellent	Lower	No
ProTura® Nanofiber Wide Pleat	Same as ProTura® Nanofiber media with the added benefit of wide pleat spacing which provides excellent surface loading and particle release of fibrous and agglomerative particles	15	BIA M EN 779-F9	Excellent	Lower	No
Cellulose/Polyester Blend Fire Retardant (FR)	Enhanced performance over commodity cellulose media due to unique combination of fiber sizes and polyester blend, with the added benefit of flame retardant properties	10	BIA L EN 779-F5	Poor	Average	No
Spunbond Polyester	High-strength media with average particle release characteristics and wide pleat spacing	11	BIA M EN 779-F6	Average	Higher	Yes
Thermally-fused Spunbond Polyester with High-efficiency ePTFE Membrane	High-strength media with ePTFE membrane provides excellent particle release. Also repels water while allowing air and moisture vapor to pass through the membrane's extremely small spaces.	16	BIA M EN 779-F9	Excellent	Very High	Yes
Thermally-fused Carbon Impregnated Spunbond Polyester with High-efficiency ePTFE Membrane	Same as thermally-fused spunbond polyester with high-efficiency ePTFE membrane with the added benefit of conductive properties	16	BIA M EN 779-F9	Excellent	Very High	Yes

* MERV (Minimum Efficiency Reporting Value) of this cartridge has been determined using ASHRAE 52.2 test standards
** BIA certification based on dust classification DIN EN 60335-2-69

Clean air. It's what we do.®

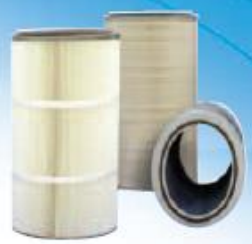

ROUND CARTRIDGES

Our round cartridge filters rank among the highest in performance, efficiency and value. We stock a wide range of OEM-specified round replacement cartridge filters for use in nearly all major brands of dust collection systems and industry applications. They are available in an assortment of media, including our proprietary ProTura® Nanofiber filters, which are rated at MERV 15 and are up to 95% efficient on .03 to 1.0 micron size dust.

OVAL CARTRIDGES

Our oval replacement cartridge filters also provide superior filtration due to our advanced proprietary ProTura® Nanofiber filtration technology. This technology is scientifically proven to achieve higher efficiency, cleaner air, lower pressure drop, longer filter life and greater energy savings than any other media used in cartridge filters. Our oval replacement cartridge filters are in stock and ready to ship.

CUSTOM CARTRIDGES

If you require a custom filter to meet a special application need or as a replacement filter for another brand, we can design and manufacture the right filter to meet your specified requirements. Combined with our extensive network of filtration experts who are continually developing new filtration technology, our application specialists will help you select the best media and filter configuration to fit your unique application.

Maximum Operating Temperature	Abrasion Resistance	Chemical Tolerance	Applications	Industries / Dust Types
180° F / 82° C	Good	Average	Most applications with extremely fine and non-fibrous dust and some abrasive dust	Abrasive blasting, Carbon black, Dry chemical processing, General industrial, Metallurgical powders, Pharmaceutical compounds, Powder paint
180° F / 82° C	Good	Average	Applications where thermally-generated fume, including live sparks, could enter dust collector	Dry weld fume, Flame cutting, Laser cutting, Metal grinding dust, Metallic fume, Plasma cutting, Thermal spraying
180° F / 82° C	Good	Average	Applications where larger or irregularly shaped particles enter dust collector	Ceramics, Composite grinding, Cotton, Fiberglass, Food, Grain handling, Leather finishing, Pharmaceutical compounds, Textiles, Tobacco, Woodworking
180° F / 82° C	Good	Average	General applications with dry, coarse particulate and larger thermally-generated fume particles. Can also be used where live sparks could enter dust collector.	Cocoa, Coffee, Detergents, General industrial, Metal grinding, Metal sanding, Milk powder, Salt, Stearates, Sugar, Textiles
180° F / 82° C or 275° F / 135° C	Excellent	Excellent	Applications where high-strength, moisture-resistant media and good release characteristics are necessary. Recommended when product contamination must be minimized.	Cardboard, Cement, Ceramics, Cotton, Fiberglass, Gypsum, Lime, Paper, Polishing, Powder coating, Rubber grinding, Shot blast, Tobacco
180° F / 82° C or 275° F / 135° C	Excellent	Excellent	Applications demanding ultra-high efficiencies or difficult dust cake release. Highly recommended for chemical, food and industrial processing when product contamination must be minimized. Excellent performance on moist, hygroscopic or agglomerative dust.	Agglomerating materials, Asbestos, Chemical processing, Fluidized bed dryers, Food processing (Flour, Starch, Sugar, Whey), Pesticides
180° F / 82° C or 275° F / 135° C	Excellent	Excellent	Applications where conveyed dust may generate static charges that require dissipation. Can be used in explosive dust applications to lessen the risk of ignition sources due to static electricity discharges.	Chemical processing, Coal, Food processing, General industrial, Pharmaceutical, Plastics, Powdered materials

www.uasinc.com

SURFACE LOADING EXCELS OVER DEPTH LOADING

UAS ProTura® Nanofiber filters feature an ultra-thin surface layer of synthetic fibers so extremely fine, they are measured in nanometers, or fractions of a micron. The layer provides excellent surface-loading capabilities due to the nano-size interfiber pores that make up their web-like surface coating. ProTura Nanofiber, therefore, acts as a shield to prevent submicron sized particles from entering and becoming embedded within the filter's substrate media. As a result, dust particles are easily released from the surface layer while the media substrate remains clean leading to fewer cleaning cycles required, lower pressure drop, reduced outlet emissions and increased filter life.

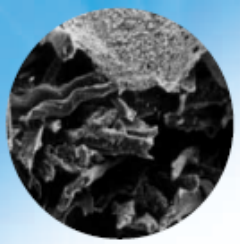

ProTura® Nanofiber surface media loaded with ISO fine test dust

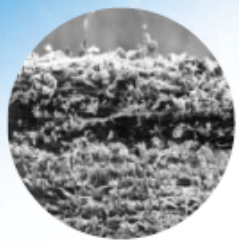

Commodity depth media loaded with ISO fine test dust

Commodity cartridge filters allow particulate to embed deep within the substrate, making them more difficult to clean. Unlike ProTura Nanofiber cartridges, these depth-loading filters have large spaces or pores within their base media fibers which allow particles to penetrate deep within the media substrate increasing pressure drop. Subsequently, they plug at a faster rate requiring more frequent cleaning which leads to increased abrasion, wear and reduced filter life. Some commodity filters include surface treatments but their coatings form layers 100 times or more thicker than ProTura Nanofiber thus creating additional depth-loading layers which further decreases commodity filter life.

THE VALUE OF PROTURA NANOFIBER

UAS ProTura Nanofiber filters deliver outstanding performance and quality to which the results are well documented and time proven. ProTura Nanofiber offers dramatic savings and value compared to commodity or generic blended filters including those with inferior surface coating treatments. ProTura Nanofiber filters help you maximize:

- **Filter Replacement Savings (Longer Filter Life)**—Lower pressure drop and fewer pulse cleaning cycles result in up to double the life and half the replacement costs with nanofiber filters.
- **Compressed Air Savings**—Dust is easily dislodged during cleaning because it remains on the nanofiber surface layer and does not embed within the media base substrate. As a result, the number of compressed air pulse cleaning cycles is significantly less thus dramatically reducing compressed air usage.
- **Energy Savings**—Exceptional surface-loading capability dramatically reduces pressure build up resulting in reduced energy requirements to operate your system.
- **Cleaner Air**—MERV 15 efficiency, reduced pressure drop and fewer cleaning cycles result in significantly reduced outlet emissions from system operation and a healthier work environment.

ADVANTAGES OVER ORDINARY NANOFIBER

Compared with other dust collection nanofiber technology, ProTura Nanofiber rated MERV 15 is up to 50% more efficient on submicron sized particles than ordinary nanofiber rated MERV 13. UAS ProTura Nanofibers are also up to 70% finer, more durable and superior in adhesion to the media substrate over ordinary nanofibers.

Independent lab results demonstrate that ProTura Nanofiber is able to endure rigorous environmental testing conducted in a test chamber at 140°F and 99.9% relative humidity.

Nanofiber diameter comparison at 5000x

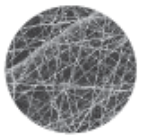

ProTura® Nanofiber
70-150 nanometers (0.07 to 0.15 micron)

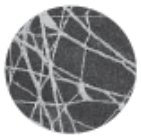

Ordinary Nanofiber
200-300 nanometers (0.20 to 0.30 micron)

Clean air. It's what we do.®

HIGH-QUALITY CARTRIDGE MANUFACTURING

With more than 75 years of expertise in manufacturing cartridge filters, our commitment to quality shows in every filter we make. Our advanced research, design, engineering and testing facilities allow us to remain on the leading edge of innovation.

Utilizing state-of-the-art production processes, we build and inspect every cartridge to ensure the highest quality is achieved to meet the performance requirements of your application. Whether you have a UAS dust collector or another brand, our knowledgeable and experienced application specialists, field-based manufacturer's representatives and customer service associates are ready to assist you to select the right filter.

THE UAS ADVANTAGE

United Air Specialists delivers a unique advantage by designing, manufacturing and selling nearly every aspect of the industrial filtration process to meet our customers' specific needs. Our goal is to provide you with a total filtration solution and it is clear why our customers breathe easy with UAS filters and equipment:
Clean air. It's what we do.®

www.uasinc.com

WHY CHOOSE UNITED AIR SPECIALISTS?

A world-renowned reputation. For more than 45 years, we've been an industry leader in air quality technology—a proven track record that speaks for itself.

Commitment to quality products. Measuring our quality against documented expectations, we practice continuous improvement methods to anticipate challenges and implement successful solutions.

Unparalleled customer support. As a customer-driven solutions provider, we earn credibility and establish successful relationships by exceeding expectations for professional service and attitude.

Innovative technical leadership. Always, we keep technology at the forefront—ensuring continuous product advancements through ongoing investments in design and manufacturing.

UAS HEADQUARTERS - USA
4440 Creek Road
Cincinnati, Ohio 45242
Ph: 513-891-0400
1-800-252-4647
E-mail: info@uasinc.com
www.uasinc.com

UAS GERMANY
Otto-Hahn-Strasse 6
D-65520 Bad Camberg
Germany
Ph: +49-6434-94220
E-mail: info@uas-inc.de
www.uas-inc.de

UAS UK
PO Box 17
Folly Lane
Warrington, Cheshire
England WA5 0NP
Ph: +44-1925-654321
E-mail: uas@clarcoruk.com
www.uasuk.com

UAS CHINA
7336 Minzhu East Street
Economic Development Zone
Weifang, Shandong 261031
China
Ph: +86-021-62370052
E-mail: filters@uasinc-cn.com
www.uasinc-cn.com

UAS

a CLARCOR company

Clean air. It's what we do.®

UAS, Inc. reserves the right to change design or specifications without notice. IND-CARTFILTERS-0512-PRO

eurofins | Air Toxics

2/19/2016
Mr. Ron Spidell
Spidell & Associates
2403 W Spaulding Street

Boise ID 83705-3560

Project Name:
Project #:
Workorder #: 1602248C

Dear Mr. Ron Spidell

The following report includes the data for the above referenced project for sample(s) received on 2/13/2016 at Air Toxics Ltd.

The data and associated QC analyzed by ASTM D-5504 are compliant with the project requirements or laboratory criteria with the exception of the deviations noted in the attached case narrative.

Thank you for choosing Eurofins Air Toxics Inc. for your air analysis needs. Eurofins Air Toxics Inc. is committed to providing accurate data of the highest quality. Please feel free the Project Manager: Kelly Buettner at 916-985-1000 if you have any questions regarding the data in this report.

Regards,

Kelly Buettner
Project Manager

A Eurofins Lancaster Laboratories Company

Eurofins Air Toxics, Inc.
180 Blue Ravine Road, Suite B
Folsom, CA 95630
T | 916-985-1000
F | 916-985-1020
www.airtoxics.com

eurofins | Air Toxics

WORK ORDER #: 1602248C

Work Order Summary

CLIENT:	Mr. Ron Spidell Spidell & Associates 2403 W Spaulding Street Boise, ID 83705-3560	**BILL TO:**	Mr. Bill Young Alternative Environmental Systems 4894 W. Lone Mountain #229 Las Vegas, NV 89130
PHONE:	208-336-4862	**P.O. #**	
FAX:		**PROJECT #**	
DATE RECEIVED:	02/13/2016	**CONTACT:**	Kelly Buettner
DATE COMPLETED:	02/19/2016		

FRACTION #	NAME	TEST	RECEIPT VAC./PRES.	FINAL PRESSURE
01A	FLARE STACK-1181	ASTM D-5504	14.5 "Hg	15 psi
02A	FLARE STACK-1183	ASTM D-5504	10.5 "Hg	15 psi
03A	FLARE STACK-1166	ASTM D-5504	8.5 "Hg	15 psi
04A	Lab Blank	ASTM D-5504	NA	NA
05A	LCS	ASTM D-5504	NA	NA
05AA	LCSD	ASTM D-5504	NA	NA

CERTIFIED BY: Heidi Mayer DATE: 02/19/16

Technical Director

Certification numbers: AZ Licensure AZ0775, NJ NELAP - CA016, NY NELAP - 11291,
TX NELAP - T104704343-14-7, UT NELAP CA009332014-5, VA NELAP - 460197, WA NELAP - C935
Name of Accreditation Body: NELAP/ORELAP (Oregon Environmental Laboratory Accreditation Program)
Accreditation number: CA300005, Effective date: 10/18/2014, Expiration date: 10/17/2015.
Eurofins Air Toxics Inc.. certifies that the test results contained in this report meet all requirements of the NELAC standards

This report shall not be reproduced, except in full, without the written approval of Eurofins Air Toxics, Inc.

180 BLUE RAVINE ROAD, SUITE B FOLSOM, CA - 9563
(916) 985-1000 . (800) 985-5955 . FAX (916) 985-1020

eurofins | Air Toxics

LABORATORY NARRATIVE
ASTM D-5504
Spidell & Associates
Workorder# 1602248C

Three 1.4 Liter Canister samples were received on February 13, 2016. The laboratory performed the analysis of sulfur compounds via ASTM D-5504 using GC/SCD. The method involves direct injection of the air sample into the GC via a fixed 2.0 mL sampling loop. See the data sheets for the reporting limits for each compound.

Method modifications taken to run these samples include:

Requirement	*ASTM D5504-12*	*ATL Modifications*
Sulfur Standards	Use compressed gases and permeation devices to generate calibration standards.	Compressed gases are used for H2S, COS, and Methyl Mercaptan. Other sulfur compounds are blended in vapor using methanolic stock standards.

Receiving Notes

Sample identifications on the Chain of Custody (COC) were not unique. The canister numbers were added to each of the sample identifications to ensure uniqueness.

According to the Chain of Custody (COC), sample FLARE STACK-1181 was collected on 2/11/16. However, the date on the sample tag reflects a collection date of 2/12/16. Therefore the date on the COC was used to calculate the sample holding time.

Analytical Notes

Samples were collected in Silonite canisters. Please note that Air Toxics does not periodically verify stability of sulfur compounds in passivated/lines canisters as recommended by ASTM D5504.

Definition of Data Qualifying Flags

Seven qualifiers may have been used on the data analysis sheets and indicate as follows:
B - Compound present in laboratory blank greater than reporting limit.
J - Estimated value.
E - Exceeds instrument calibration range.
S - Saturated peak.
Q - Exceeds quality control limits.
U - Compound analyzed for but not detected above the detection limit.
M - Reported value may be biased due to apparent matrix interferences.
File extensions may have been used on the data analysis sheets and indicates as follows:
a-File was requantified
b-File was quantified by a second column and detector
r1-File was requantified for the purpose of reissue

eurofins | Air Toxics

Summary of Detected Compounds
SULFUR GASES BY ASTM D-5504 GC/SCD

Client Sample ID: FLARE STACK-1181

Lab ID#: 1602248C-01A

Compound	Rpt. Limit (ppbv)	Amount (ppbv)
Carbonyl Sulfide	1900	120000
Thiophene	1900	24000
3-Methylthiophene	1900	6400

Client Sample ID: FLARE STACK-1183

Lab ID#: 1602248C-02A

Compound	Rpt. Limit (ppbv)	Amount (ppbv)
Carbonyl Sulfide	2000	150000
Thiophene	2000	28000
3-Methylthiophene	2000	7600
2,5-Dimethylthiophene	2000	2100

Client Sample ID: FLARE STACK-1166

Lab ID#: 1602248C-03A

Compound	Rpt. Limit (ppbv)	Amount (ppbv)
Carbonyl Sulfide	2200	150000
Thiophene	2200	36000
Dimethyl Disulfide	2200	2400
3-Methylthiophene	2200	13000
2,5-Dimethylthiophene	2200	3500

eurofins | Air Toxics

Client Sample ID: FLARE STACK-1181
Lab ID#: 1602248C-01A
SULFUR GASES BY ASTM D-5504 GC/SCD

File Name:	k021717	**Date of Collection:**	2/11/16 12:00:00 PM
Dil. Factor:	469	**Date of Analysis:**	2/17/16 01:56 PM

Compound	Rpt. Limit (ppbv)	Amount (ppbv)
Hydrogen Sulfide	1900	Not Detected
Carbonyl Sulfide	1900	120000
Methyl Mercaptan	1900	Not Detected
Ethyl Mercaptan	1900	Not Detected
Dimethyl Sulfide	1900	Not Detected
Carbon Disulfide	9400	Not Detected
Isopropyl Mercaptan	1900	Not Detected
tert-Butyl Mercaptan	1900	Not Detected
n-Propyl Mercaptan	1900	Not Detected
Ethyl Methyl Sulfide	1900	Not Detected
Thiophene	1900	24000
Isobutyl Mercaptan	1900	Not Detected
Diethyl Sulfide	1900	Not Detected
n-Butyl Mercaptan	1900	Not Detected
Dimethyl Disulfide	1900	Not Detected
3-Methylthiophene	1900	6400
Tetrahydrothiophene	1900	Not Detected
2-Ethylthiophene	1900	Not Detected
2,5-Dimethylthiophene	1900	Not Detected
Diethyl Disulfide	1900	Not Detected

Container Type: 1.4 Liter Canister

eurofins | Air Toxics

Client Sample ID: FLARE STACK-1183
Lab ID#: 1602248C-02A
SULFUR GASES BY ASTM D-5504 GC/SCD

File Name:	k021718	**Date of Collection:**	2/11/16 1:25:00 PM
Dil. Factor:	498	**Date of Analysis:**	2/17/16 02:19 PM

Compound	Rpt. Limit (ppbv)	Amount (ppbv)
Hydrogen Sulfide	2000	Not Detected
Carbonyl Sulfide	2000	150000
Methyl Mercaptan	2000	Not Detected
Ethyl Mercaptan	2000	Not Detected
Dimethyl Sulfide	2000	Not Detected
Carbon Disulfide	10000	Not Detected
Isopropyl Mercaptan	2000	Not Detected
tert-Butyl Mercaptan	2000	Not Detected
n-Propyl Mercaptan	2000	Not Detected
Ethyl Methyl Sulfide	2000	Not Detected
Thiophene	2000	28000
Isobutyl Mercaptan	2000	Not Detected
Diethyl Sulfide	2000	Not Detected
n-Butyl Mercaptan	2000	Not Detected
Dimethyl Disulfide	2000	Not Detected
3-Methylthiophene	2000	7600
Tetrahydrothiophene	2000	Not Detected
2-Ethylthiophene	2000	Not Detected
2,5-Dimethylthiophene	2000	2100
Diethyl Disulfide	2000	Not Detected

Container Type: 1.4 Liter Canister

eurofins | Air Toxics

Client Sample ID: FLARE STACK-1166
Lab ID#: 1602248C-03A
SULFUR GASES BY ASTM D-5504 GC/SCD

File Name:	k021719	**Date of Collection:**	2/11/16 3:32:00 PM
Dil. Factor:	564	**Date of Analysis:**	2/17/16 02:44 PM

Compound	Rpt. Limit (ppbv)	Amount (ppbv)
Hydrogen Sulfide	2200	Not Detected
Carbonyl Sulfide	2200	150000
Methyl Mercaptan	2200	Not Detected
Ethyl Mercaptan	2200	Not Detected
Dimethyl Sulfide	2200	Not Detected
Carbon Disulfide	11000	Not Detected
Isopropyl Mercaptan	2200	Not Detected
tert-Butyl Mercaptan	2200	Not Detected
n-Propyl Mercaptan	2200	Not Detected
Ethyl Methyl Sulfide	2200	Not Detected
Thiophene	2200	36000
Isobutyl Mercaptan	2200	Not Detected
Diethyl Sulfide	2200	Not Detected
n-Butyl Mercaptan	2200	Not Detected
Dimethyl Disulfide	2200	2400
3-Methylthiophene	2200	13000
Tetrahydrothiophene	2200	Not Detected
2-Ethylthiophene	2200	Not Detected
2,5-Dimethylthiophene	2200	3500
Diethyl Disulfide	2200	Not Detected

Container Type: 1.4 Liter Canister

eurofins | Air Toxics

Client Sample ID: Lab Blank
Lab ID#: 1602248C-04A
SULFUR GASES BY ASTM D-5504 GC/SCD

File Name:	k021704	**Date of Collection: NA**	
Dil. Factor:	1.00	**Date of Analysis: 2/17/16 08:17 AM**	

Compound	Rpt. Limit (ppbv)	Amount (ppbv)
Hydrogen Sulfide	4.0	Not Detected
Carbonyl Sulfide	4.0	Not Detected
Methyl Mercaptan	4.0	Not Detected
Ethyl Mercaptan	4.0	Not Detected
Dimethyl Sulfide	4.0	Not Detected
Carbon Disulfide	20	Not Detected
Isopropyl Mercaptan	4.0	Not Detected
tert-Butyl Mercaptan	4.0	Not Detected
n-Propyl Mercaptan	4.0	Not Detected
Ethyl Methyl Sulfide	4.0	Not Detected
Thiophene	4.0	Not Detected
Isobutyl Mercaptan	4.0	Not Detected
Diethyl Sulfide	4.0	Not Detected
n-Butyl Mercaptan	4.0	Not Detected
Dimethyl Disulfide	4.0	Not Detected
3-Methylthiophene	4.0	Not Detected
Tetrahydrothiophene	4.0	Not Detected
2-Ethylthiophene	4.0	Not Detected
2,5-Dimethylthiophene	4.0	Not Detected
Diethyl Disulfide	4.0	Not Detected

Container Type: NA - Not Applicable

eurofins | Air Toxics

Client Sample ID: LCS
Lab ID#: 1602248C-05A
SULFUR GASES BY ASTM D-5504 GC/SCD

File Name:	k021702	**Date of Collection: NA**	
Dil. Factor:	1.00	**Date of Analysis: 2/17/16 07:29 AM**	

Compound	%Recovery	Method Limits
Hydrogen Sulfide	97	70-130
Carbonyl Sulfide	86	70-130
Methyl Mercaptan	98	70-130
Ethyl Mercaptan	102	70-130
Dimethyl Sulfide	101	70-130
Carbon Disulfide	106	70-130
Isopropyl Mercaptan	101	70-130
tert-Butyl Mercaptan	96	70-130
n-Propyl Mercaptan	95	70-130
Ethyl Methyl Sulfide	92	70-130
Thiophene	96	70-130
Isobutyl Mercaptan	103	70-130
Diethyl Sulfide	102	70-130
n-Butyl Mercaptan	91	70-130
Dimethyl Disulfide	97	70-130
3-Methylthiophene	96	70-130
Tetrahydrothiophene	102	70-130
2-Ethylthiophene	100	70-130
2,5-Dimethylthiophene	95	70-130
Diethyl Disulfide	100	70-130

Container Type: NA - Not Applicable

eurofins | Air Toxics

Client Sample ID: LCSD
Lab ID#: 1602248C-05AA
SULFUR GASES BY ASTM D-5504 GC/SCD

File Name:	k021703	**Date of Collection: NA**	
Dil. Factor:	1.00	**Date of Analysis: 2/17/16 07:52 AM**	

Compound	%Recovery	Method Limits
Hydrogen Sulfide	98	70-130
Carbonyl Sulfide	91	70-130
Methyl Mercaptan	105	70-130
Ethyl Mercaptan	110	70-130
Dimethyl Sulfide	112	70-130
Carbon Disulfide	111	70-130
Isopropyl Mercaptan	109	70-130
tert-Butyl Mercaptan	106	70-130
n-Propyl Mercaptan	105	70-130
Ethyl Methyl Sulfide	106	70-130
Thiophene	106	70-130
Isobutyl Mercaptan	103	70-130
Diethyl Sulfide	114	70-130
n-Butyl Mercaptan	105	70-130
Dimethyl Disulfide	104	70-130
3-Methylthiophene	110	70-130
Tetrahydrothiophene	122	70-130
2-Ethylthiophene	120	70-130
2,5-Dimethylthiophene	119	70-130
Diethyl Disulfide	122	70-130

Container Type: NA - Not Applicable

eurofins | Air Toxics

2/27/2016
Mr. Ron Spidell
Spidell & Associates
2403 W Spaulding Street

Boise ID 83705-3560

Project Name:
Project #:
Workorder #: 1602248B

Dear Mr. Ron Spidell

The following report includes the data for the above referenced project for sample(s) received on 2/13/2016 at Air Toxics Ltd.

The data and associated QC analyzed by Modified ASTM D-1945 are compliant with the project requirements or laboratory criteria with the exception of the deviations noted in the attached case narrative.

Thank you for choosing Eurofins Air Toxics Inc. for your air analysis needs. Eurofins Air Toxics Inc. is committed to providing accurate data of the highest quality. Please feel free the Project Manager: Kelly Buettner at 916-985-1000 if you have any questions regarding the data in this report.

Regards,

Kelly Buettner
Project Manager

A Eurofins Lancaster Laboratories Company

Eurofins Air Toxics, Inc.
180 Blue Ravine Road, Suite B
Folsom, CA 95630
T | 916-985-1000
F | 916-985-1020
www.airtoxics.com

eurofins | Air Toxics

WORK ORDER #: 1602248B

Work Order Summary

CLIENT:	Mr. Ron Spidell Spidell & Associates 2403 W Spaulding Street Boise, ID 83705-3560	BILL TO:	Mr. Bill Young Alternative Environmental Systems 4894 W. Lone Mountain #229 Las Vegas, NV 89130
PHONE:	208-336-4862	P.O. #	
FAX:		PROJECT #	
DATE RECEIVED:	02/13/2016	CONTACT:	Kelly Buettner
DATE COMPLETED:	02/27/2016		

FRACTION #	NAME	TEST	RECEIPT VAC./PRES.	FINAL PRESSURE
01A	FLARE STACK-1181	Modified ASTM D-1945	14.5 "Hg	15 psi
02A	FLARE STACK-1183	Modified ASTM D-1945	10.5 "Hg	15 psi
03A	FLARE STACK-1166	Modified ASTM D-1945	8.5 "Hg	15 psi
04A	Lab Blank	Modified ASTM D-1945	NA	NA
04B	Lab Blank	Modified ASTM D-1945	NA	NA
05A	LCS	Modified ASTM D-1945	NA	NA
05AA	LCSD	Modified ASTM D-1945	NA	NA
05B	LCS	Modified ASTM D-1945	NA	NA

CERTIFIED BY: Heidi Hayes DATE: 02/27/16

Technical Director

Certification numbers: AZ Licensure AZ0775, NJ NELAP - CA016, NY NELAP - 11291,
TX NELAP - T104704343-14-7, UT NELAP CA009332014-5, VA NELAP - 460197, WA NELAP - C935
Name of Accreditation Body: NELAP/ORELAP (Oregon Environmental Laboratory Accreditation Program)
Accreditation number: CA300005, Effective date: 10/18/2014, Expiration date: 10/17/2015.
Eurofins Air Toxics Inc.. certifies that the test results contained in this report meet all requirements of the NELAC standards

This report shall not be reproduced, except in full, without the written approval of Eurofins Air Toxics, Inc.

180 BLUE RAVINE ROAD, SUITE B FOLSOM, CA - 9563
(916) 985-1000 . (800) 985-5955 . FAX (916) 985-1020

eurofins | Air Toxics

LABORATORY NARRATIVE
Modified ASTM D-1945
Spidell & Associates
Workorder# 1602248B

Three 1.4 Liter Canister samples were received on February 13, 2016. The laboratory performed analysis via modified ASTM Method D-1945 for Methane and fixed gases in natural gas using GC/FID or GC/TCD. The method involves direct injection of 1.0 mL of sample.

On the analytical column employed for this analysis, Oxygen coelutes with Argon. The corresponding peak is quantitated as Oxygen.

Since Nitrogen is used to pressurize samples, the reported Nitrogen values are calculated by adding all the sample components and subtracting from 100%.

Method modifications taken to run these samples are summarized in the table below. Specific project requirements may over-ride the ATL modifications.

Requirement	*ASTM D-1945*	*ATL Modifications*
Normalization	Sum of original values should not differ from 100.0% by more than 1.0%.	Sum of original values may range between 85-115%. Normalization of data not performed.
Sample analysis	Equilibrate samples to 20-50° F. above source temperature at field sampling	No heating of samples is performed.
Sample calculation	Response factor is calculated using peak height for C5 and lighter compounds.	Peak areas are used for all target analytes to quantitate concentrations.
Reference Standard	Concentration should not be < half of nor differ by more than 2 X the concentration of the sample. Run 2 consecutive checks; must agree within 1%.	A minimum of 5-point calibration curve is performed. Quantitation is based on average Response Factor with an acceptance criterion of %RSD <= 15%. All target analytes must be within the linear range of calibration (with the exception of O2, N2, and C6+
Sample Injection Volume	0.50 mL to achieve Methane linearity.	1.0 mL.

Receiving Notes

Sample identifications on the Chain of Custody (COC) were not unique. The canister numbers were added to each of the sample identifications to ensure uniqueness.

According to the Chain of Custody (COC), sample FLARE STACK-1181 was collected on 2/11/16. However, the date on the sample tag reflects a collection date of 2/12/16. Therefore the date on the COC was used to calculate the sample holding time.

eurofins | Air Toxics

Analytical Notes

Unknown C4 and C5 hydrocarbons were detected in sample FLARE STACK-1181, FLARE STACK-1183 and FLARE STACK-1166.

Definition of Data Qualifying Flags

Six qualifiers may have been used on the data analysis sheets and indicate as follows:
J - Estimated value.
E - Exceeds instrument calibration range.
S - Saturated peak.
Q - Exceeds quality control limits.
U - Compound analyzed for but not detected above the detection limit.
M - Reported value may be biased due to apparent matrix interferences.

File extensions may have been used on the data analysis sheets and indicates as follows:
a-File was requantified
b-File was quantified by a second column and detector
r1-File was requantified for the purpose of reissue

eurofins | Air Toxics

Summary of Detected Compounds
NATURAL GAS ANALYSIS BY MODIFIED ASTM D-1945

Client Sample ID: FLARE STACK-1181
Lab ID#: 1602248B-01A

Compound	Rpt. Limit (%)	Amount (%)
Oxygen	0.39	4.3
Nitrogen	0.39	70
Carbon Monoxide	0.039	0.99
Methane	0.00039	3.6
Carbon Dioxide	0.039	0.99
Ethane	0.0039	1.2
Ethene	0.0039	1.6
Acetylene	0.0039	0.0055
Propane	0.0039	9.1
Isobutane	0.0039	0.37
Butane	0.0039	0.15
Neopentane	0.0039	0.042
Isopentane	0.0039	0.024
Pentane	0.0039	0.027
C6+	0.039	1.6
Hydrogen	0.039	3.6
Unknown C5	0.039	1.7
Unknown C4	0.039	0.80

Client Sample ID: FLARE STACK-1183
Lab ID#: 1602248B-02A

Compound	Rpt. Limit (%)	Amount (%)
Oxygen	0.31	5.2
Nitrogen	0.31	69
Carbon Monoxide	0.031	0.98
Methane	0.00031	3.6
Carbon Dioxide	0.031	1.0
Ethane	0.0031	1.2
Ethene	0.0031	1.6
Acetylene	0.0031	0.0059
Propane	0.0031	9.3
Isobutane	0.0031	0.38

eurofins | Air Toxics

Summary of Detected Compounds
NATURAL GAS ANALYSIS BY MODIFIED ASTM D-1945

Client Sample ID: FLARE STACK-1183
Lab ID#: 1602248B-02A

Butane	0.0031	0.16
Neopentane	0.0031	0.044
Isopentane	0.0031	0.026
Pentane	0.0031	0.030
C6+	0.031	1.7
Hydrogen	0.031	3.4
Unknown C5	0.031	1.8
Unknown C4	0.031	0.80

Client Sample ID: FLARE STACK-1166
Lab ID#: 1602248B-03A

Compound	Rpt. Limit (%)	Amount (%)
Oxygen	0.28	3.8
Nitrogen	0.28	66
Carbon Monoxide	0.028	1.1
Methane	0.00028	4.5
Carbon Dioxide	0.028	1.1
Ethane	0.0028	1.4
Ethene	0.0028	1.9
Acetylene	0.0028	0.0067
Propane	0.0028	9.7
Isobutane	0.0028	0.42
Butane	0.0028	0.18
Neopentane	0.0028	0.051
Isopentane	0.0028	0.030
Pentane	0.0028	0.034
C6+	0.028	2.1
Hydrogen	0.028	4.7
Unknown C5	0.028	2.0
Unknown C4	0.028	0.95

eurofins | Air Toxics

Client Sample ID: FLARE STACK-1181
Lab ID#: 1602248B-01A
NATURAL GAS ANALYSIS BY MODIFIED ASTM D-1945

File Name:	10022423	**Date of Collection:**	2/11/16 12:00:00 PM
Dil. Factor:	3.91	**Date of Analysis:**	2/24/16 07:26 PM

Compound	Rpt. Limit (%)	Amount (%)
Oxygen	0.39	4.3
Nitrogen	0.39	70
Carbon Monoxide	0.039	0.99
Methane	0.00039	3.6
Carbon Dioxide	0.039	0.99
Ethane	0.0039	1.2
Ethene	0.0039	1.6
Acetylene	0.0039	0.0055
Propane	0.0039	9.1
Isobutane	0.0039	0.37
Butane	0.0039	0.15
Neopentane	0.0039	0.042
Isopentane	0.0039	0.024
Pentane	0.0039	0.027
C6+	0.039	1.6
Hydrogen	0.039	3.6
Unknown C5	0.039	1.7
Unknown C4	0.039	0.80

Total BTU/Cu.F. = 520
Total Sp. Gravity = 1.0
Container Type: 1.4 Liter Canister

eurofins | Air Toxics

Client Sample ID: FLARE STACK-1183
Lab ID#: 1602248B-02A
NATURAL GAS ANALYSIS BY MODIFIED ASTM D-1945

File Name:	10022424	**Date of Collection:**	2/11/16 1:25:00 PM
Dil. Factor:	3.11	**Date of Analysis:**	2/24/16 07:58 PM

Compound	Rpt. Limit (%)	Amount (%)
Oxygen	0.31	5.2
Nitrogen	0.31	69
Carbon Monoxide	0.031	0.98
Methane	0.00031	3.6
Carbon Dioxide	0.031	1.0
Ethane	0.0031	1.2
Ethene	0.0031	1.6
Acetylene	0.0031	0.0059
Propane	0.0031	9.3
Isobutane	0.0031	0.38
Butane	0.0031	0.16
Neopentane	0.0031	0.044
Isopentane	0.0031	0.026
Pentane	0.0031	0.030
C6+	0.031	1.7
Hydrogen	0.031	3.4
Unknown C5	0.031	1.8
Unknown C4	0.031	0.80

Total BTU/Cu.F. = 530
Total Sp. Gravity = 1.1
Container Type: 1.4 Liter Canister

eurofins | Air Toxics

Client Sample ID: FLARE STACK-1166
Lab ID#: 1602248B-03A
NATURAL GAS ANALYSIS BY MODIFIED ASTM D-1945

File Name:	10022425	**Date of Collection:**	2/11/16 3:32:00 PM
Dil. Factor:	2.82	**Date of Analysis:**	2/24/16 08:28 PM

Compound	Rpt. Limit (%)	Amount (%)
Oxygen	0.28	3.8
Nitrogen	0.28	66
Carbon Monoxide	0.028	1.1
Methane	0.00028	4.5
Carbon Dioxide	0.028	1.1
Ethane	0.0028	1.4
Ethene	0.0028	1.9
Acetylene	0.0028	0.0067
Propane	0.0028	9.7
Isobutane	0.0028	0.42
Butane	0.0028	0.18
Neopentane	0.0028	0.051
Isopentane	0.0028	0.030
Pentane	0.0028	0.034
C6+	0.028	2.1
Hydrogen	0.028	4.7
Unknown C5	0.028	2.0
Unknown C4	0.028	0.95

Total BTU/Cu.F. = 600
Total Sp. Gravity = 1.1
Container Type: 1.4 Liter Canister

Page 9 of 14

eurofins | Air Toxics

Client Sample ID: Lab Blank
Lab ID#: 1602248B-04A
NATURAL GAS ANALYSIS BY MODIFIED ASTM D-1945

File Name:	**10022404**	**Date of Collection: NA**	
Dil. Factor:	**1.00**	**Date of Analysis: 2/24/16 09:09 AM**	

Compound	Rpt. Limit (%)	Amount (%)
Oxygen	0.10	Not Detected
Nitrogen	0.10	Not Detected
Carbon Monoxide	0.010	Not Detected
Methane	0.00010	Not Detected
Carbon Dioxide	0.010	Not Detected
Ethane	0.0010	Not Detected
Ethene	0.0010	Not Detected
Acetylene	0.0010	Not Detected
Propane	0.0010	Not Detected
Isobutane	0.0010	Not Detected
Butane	0.0010	Not Detected
Neopentane	0.0010	Not Detected
Isopentane	0.0010	Not Detected
Pentane	0.0010	Not Detected
C6+	0.010	Not Detected

Container Type: NA - Not Applicable

eurofins | Air Toxics

Client Sample ID: Lab Blank
Lab ID#: 1602248B-04B

NATURAL GAS ANALYSIS BY MODIFIED ASTM D-1945

File Name:	10022405c	Date of Collection: NA	
Dil. Factor:	1.00	Date of Analysis: 2/24/16 09:36 AM	

Compound	Rpt. Limit (%)	Amount (%)
Hydrogen	0.010	Not Detected

Container Type: NA - Not Applicable

eurofins | Air Toxics

Client Sample ID: LCS
Lab ID#: 1602248B-05A
NATURAL GAS ANALYSIS BY MODIFIED ASTM D-1945

File Name:	10022402	**Date of Collection: NA**	
Dil. Factor:	1.00	**Date of Analysis: 2/24/16 08:08 AM**	

Compound	%Recovery	Method Limits
Oxygen	106	85-115
Nitrogen	93	85-115
Carbon Monoxide	93	85-115
Methane	100	85-115
Carbon Dioxide	99	85-115
Ethane	100	85-115
Ethene	100	85-115
Acetylene	103	85-115
Propane	103	85-115
Isobutane	103	85-115
Butane	102	85-115
Neopentane	104	85-115
Isopentane	102	85-115
Pentane	102	85-115
C6+	103	85-115

Container Type: NA - Not Applicable

eurofins | Air Toxics

Client Sample ID: LCSD
Lab ID#: 1602248B-05AA
NATURAL GAS ANALYSIS BY MODIFIED ASTM D-1945

File Name:	10022427	**Date of Collection: NA**	
Dil. Factor:	1.00	**Date of Analysis: 2/24/16 09:26 PM**	

Compound	%Recovery	Method Limits
Oxygen	100	85-115
Nitrogen	92	85-115
Carbon Monoxide	94	85-115
Methane	102	85-115
Carbon Dioxide	100	85-115
Ethane	101	85-115
Ethene	102	85-115
Acetylene	105	85-115
Propane	105	85-115
Isobutane	105	85-115
Butane	104	85-115
Neopentane	105	85-115
Isopentane	104	85-115
Pentane	104	85-115
C6+	108	85-115

Container Type: NA - Not Applicable

eurofins | Air Toxics

Client Sample ID: LCS
Lab ID#: 1602248B-05B
NATURAL GAS ANALYSIS BY MODIFIED ASTM D-1945

File Name:	10022426c	Date of Collection: NA	
Dil. Factor:	1.00	Date of Analysis: 2/24/16 08:56 PM	

Compound	%Recovery	Method Limits
Hydrogen	101	85-115

Container Type: NA - Not Applicable

eurofins | Air Toxics

2/29/2016
Mr. Ron Spidell
Spidell & Associates
2403 W Spaulding Street

Boise ID 83705-3560

Project Name:
Project #:
Workorder #: 1602248A

Dear Mr. Ron Spidell

The following report includes the data for the above referenced project for sample(s) received on 2/13/2016 at Air Toxics Ltd.

The data and associated QC analyzed by TO-15 are compliant with the project requirements or laboratory criteria with the exception of the deviations noted in the attached case narrative.

Thank you for choosing Eurofins Air Toxics Inc. for your air analysis needs. Eurofins Air Toxics Inc. is committed to providing accurate data of the highest quality. Please feel free the Project Manager: Kelly Buettner at 916-985-1000 if you have any questions regarding the data in this report.

Regards,

Kelly Buettner
Project Manager

A Eurofins Lancaster Laboratories Company

Eurofins Air Toxics, Inc.
180 Blue Ravine Road, Suite B
Folsom, CA 95630
T | 916-985-1000
F | 916-985-1020
www.airtoxics.com

eurofins | Air Toxics

WORK ORDER #: 1602248A

Work Order Summary

CLIENT:	Mr. Ron Spidell Spidell & Associates 2403 W Spaulding Street Boise, ID 83705-3560	BILL TO:	Mr. Bill Young Alternative Environmental Systems 4894 W. Lone Mountain #229 Las Vegas, NV 89130
PHONE:	208-336-4862	P.O. #	
FAX:		PROJECT #	
DATE RECEIVED:	02/13/2016	CONTACT:	Kelly Buettner
DATE COMPLETED:	02/29/2016		

FRACTION #	NAME	TEST	RECEIPT VAC./PRES.	FINAL PRESSURE
01A	FLARE STACK-1181	TO-15	14.5 "Hg	15 psi
02A	FLARE STACK-1183	TO-15	10.5 "Hg	15 psi
03A	FLARE STACK-1166	TO-15	8.5 "Hg	15 psi
04A	Lab Blank	TO-15	NA	NA
05A	CCV	TO-15	NA	NA
06A	LCS	TO-15	NA	NA
06AA	LCSD	TO-15	NA	NA

CERTIFIED BY: Heidi Hayes DATE: 02/29/16

Technical Director

Certification numbers: AZ Licensure AZ0775, NJ NELAP - CA016, NY NELAP - 11291,
TX NELAP - T104704343-14-7, UT NELAP CA009332014-5, VA NELAP - 460197, WA NELAP - C935
Name of Accreditation Body: NELAP/ORELAP (Oregon Environmental Laboratory Accreditation Program)
Accreditation number: CA300005, Effective date: 10/18/2014, Expiration date: 10/17/2015.
Eurofins Air Toxics Inc.. certifies that the test results contained in this report meet all requirements of the NELAC standards

This report shall not be reproduced, except in full, without the written approval of Eurofins Air Toxics, Inc.

180 BLUE RAVINE ROAD, SUITE B FOLSOM, CA - 9563
(916) 985-1000 . (800) 985-5955 . FAX (916) 985-1020

eurofins | Air Toxics

LABORATORY NARRATIVE
EPA Method TO-15
Spidell & Associates
Workorder# 1602248A

Three 1.4 Liter Canister samples were received on February 13, 2016. The laboratory performed analysis via EPA Method TO-15 using GC/MS in the full scan mode.

This workorder was independently validated prior to submittal using 'USEPA National Functional Guidelines' as generally applied to the analysis of volatile organic compounds in air. A rules-based, logic driven, independent validation engine was employed to assess completeness, evaluate pass/fail of relevant project quality control requirements and verification of all quantified amounts.

Receiving Notes

Sample identifications on the Chain of Custody (COC) were not unique. The canister numbers were added to each of the sample identifications to ensure uniqueness.

According to the Chain of Custody (COC), sample FLARE STACK-1181 was collected on 2/11/16. However, the date on the sample tag reflects a collection date of 2/12/16. Therefore the date on the COC was used to calculate the sample holding time.

Analytical Notes

All Quality Control Limit exceedances and affected sample results are noted by flags. Each flag is defined at the bottom of this Case Narrative and on each Sample Result Summary page. Target compound non-detects in the samples that are associated with high bias in QC analyses have not been flagged.

Dilution was performed on samples FLARE STACK-1181, FLARE STACK-1183 and FLARE STACK-1166 due to the presence of high level target species.

Specific analytes that are requested by the client to be reported as tentatively identified compounds (TICs) are determined by searching for each compound's characteristic spectra. If no chromatographic peak displaying the compound specific spectra exists, then the TIC is reported as not detected. Please note that the laboratory has not evaluated the stability of any heretofore tentatively identified compound in the vapor phase or for efficiency of recovery through the analytical system.

Definition of Data Qualifying Flags

Eight qualifiers may have been used on the data analysis sheets and indicates as follows:

B - Compound present in laboratory blank greater than reporting limit (background subtraction not performed).
J - Estimated value.
E - Exceeds instrument calibration range.
S - Saturated peak.
Q - Exceeds quality control limits.
U - Compound analyzed for but not detected above the reporting limit, LOD, or MDL value. See

eurofins | Air Toxics

data page for project specific U-flag definition.
UJ- Non-detected compound associated with low bias in the CCV
N - The identification is based on presumptive evidence.

File extensions may have been used on the data analysis sheets and indicates as follows:
a-File was requantified
b-File was quantified by a second column and detector
r1-File was requantified for the purpose of reissue

eurofins | Air Toxics

Summary of Detected Compounds
EPA METHOD TO-15 GC/MS

Client Sample ID: FLARE STACK-1181
Lab ID#: 1602248A-01A

Compound	Rpt. Limit (ppbv)	Amount (ppbv)	Rpt. Limit (ug/m3)	Amount (ug/m3)
Propane	7800000	40000000	14000000	72000000

Client Sample ID: FLARE STACK-1183
Lab ID#: 1602248A-02A

Compound	Rpt. Limit (ppbv)	Amount (ppbv)	Rpt. Limit (ug/m3)	Amount (ug/m3)
1,3-Butadiene	780000	1400000	1700000	3000000
Benzene	780000	3000000	2500000	9500000
Toluene	780000	2000000	2900000	7600000
Propane	3100000	57000000 E	5600000	100000000 E

Client Sample ID: FLARE STACK-1166
Lab ID#: 1602248A-03A

Compound	Rpt. Limit (ppbv)	Amount (ppbv)	Rpt. Limit (ug/m3)	Amount (ug/m3)
1,3-Butadiene	700000	1600000	1600000	3500000
Benzene	700000	3100000	2200000	9900000
Toluene	700000	1800000	2600000	6800000
Propane	2800000	65000000 E	5100000	120000000 E

eurofins | Air Toxics

Client Sample ID: FLARE STACK-1181
Lab ID#: 1602248A-01A
EPA METHOD TO-15 GC/MS

File Name:	14022511	Date of Collection:	2/11/16 12:00:00 PM
Dil. Factor:	391000	Date of Analysis:	2/25/16 01:42 PM

Compound	Rpt. Limit (ppbv)	Amount (ppbv)	Rpt. Limit (ug/m3)	Amount (ug/m3)
Freon 12	2000000	Not Detected	9700000	Not Detected
Freon 114	2000000	Not Detected	14000000	Not Detected
Chloromethane	7800000	Not Detected	16000000	Not Detected
Vinyl Chloride	2000000	Not Detected	5000000	Not Detected
1,3-Butadiene	2000000	Not Detected	4300000	Not Detected
Bromomethane	2000000	Not Detected	7600000	Not Detected
Chloroethane	7800000	Not Detected	21000000	Not Detected
Freon 11	2000000	Not Detected	11000000	Not Detected
Ethanol	7800000	Not Detected	15000000	Not Detected
Freon 113	2000000	Not Detected	15000000	Not Detected
1,1-Dichloroethene	2000000	Not Detected	7800000	Not Detected
Acetone	7800000	Not Detected	18000000	Not Detected
2-Propanol	7800000	Not Detected	19000000	Not Detected
Carbon Disulfide	2000000	Not Detected	6100000	Not Detected
3-Chloropropene	7800000	Not Detected	24000000	Not Detected
Methylene Chloride	2000000	Not Detected	6800000	Not Detected
Methyl tert-butyl ether	2000000	Not Detected	7000000	Not Detected
trans-1,2-Dichloroethene	2000000	Not Detected	7800000	Not Detected
Hexane	2000000	Not Detected	6900000	Not Detected
1,1-Dichloroethane	2000000	Not Detected	7900000	Not Detected
2-Butanone (Methyl Ethyl Ketone)	7800000	Not Detected	23000000	Not Detected
cis-1,2-Dichloroethene	2000000	Not Detected	7800000	Not Detected
Tetrahydrofuran	2000000	Not Detected	5800000	Not Detected
Chloroform	2000000	Not Detected	9500000	Not Detected
1,1,1-Trichloroethane	2000000	Not Detected	11000000	Not Detected
Cyclohexane	2000000	Not Detected	6700000	Not Detected
Carbon Tetrachloride	2000000	Not Detected	12000000	Not Detected
2,2,4-Trimethylpentane	2000000	Not Detected	9100000	Not Detected
Benzene	2000000	Not Detected	6200000	Not Detected
1,2-Dichloroethane	2000000	Not Detected	7900000	Not Detected
Heptane	2000000	Not Detected	8000000	Not Detected
Trichloroethene	2000000	Not Detected	10000000	Not Detected
1,2-Dichloropropane	2000000	Not Detected	9000000	Not Detected
1,4-Dioxane	7800000	Not Detected	28000000	Not Detected
Bromodichloromethane	2000000	Not Detected	13000000	Not Detected
cis-1,3-Dichloropropene	2000000	Not Detected	8900000	Not Detected
4-Methyl-2-pentanone	2000000	Not Detected	8000000	Not Detected
Toluene	2000000	Not Detected	7400000	Not Detected
trans-1,3-Dichloropropene	2000000	Not Detected	8900000	Not Detected
1,1,2-Trichloroethane	2000000	Not Detected	11000000	Not Detected
Tetrachloroethene	2000000	Not Detected	13000000	Not Detected
2-Hexanone	7800000	Not Detected	32000000	Not Detected

Page 6 of 19

eurofins | Air Toxics

Client Sample ID: FLARE STACK-1181
Lab ID#: 1602248A-01A
EPA METHOD TO-15 GC/MS

File Name:	14022511	Date of Collection:	2/11/16 12:00:00 PM
Dil. Factor:	391000	Date of Analysis:	2/25/16 01:42 PM

Compound	Rpt. Limit (ppbv)	Amount (ppbv)	Rpt. Limit (ug/m3)	Amount (ug/m3)
Dibromochloromethane	2000000	Not Detected	17000000	Not Detected
1,2-Dibromoethane (EDB)	2000000	Not Detected	15000000	Not Detected
Chlorobenzene	2000000	Not Detected	9000000	Not Detected
Ethyl Benzene	2000000	Not Detected	8500000	Not Detected
m,p-Xylene	2000000	Not Detected	8500000	Not Detected
o-Xylene	2000000	Not Detected	8500000	Not Detected
Styrene	2000000	Not Detected	8300000	Not Detected
Bromoform	2000000	Not Detected	20000000	Not Detected
Cumene	2000000	Not Detected	9600000	Not Detected
1,1,2,2-Tetrachloroethane	2000000	Not Detected	13000000	Not Detected
Propylbenzene	2000000	Not Detected	9600000	Not Detected
4-Ethyltoluene	2000000	Not Detected	9600000	Not Detected
1,3,5-Trimethylbenzene	2000000	Not Detected	9600000	Not Detected
1,2,4-Trimethylbenzene	2000000	Not Detected	9600000	Not Detected
1,3-Dichlorobenzene	2000000	Not Detected	12000000	Not Detected
1,4-Dichlorobenzene	2000000	Not Detected	12000000	Not Detected
alpha-Chlorotoluene	2000000	Not Detected	10000000	Not Detected
1,2-Dichlorobenzene	2000000	Not Detected	12000000	Not Detected
1,2,4-Trichlorobenzene	7800000	Not Detected	58000000	Not Detected
Hexachlorobutadiene	7800000	Not Detected	83000000	Not Detected
Indene	7800000	Not Detected	37000000	Not Detected
Propane	7800000	40000000	14000000	72000000

TENTATIVELY IDENTIFIED COMPOUNDS

Compound	CAS Number	Match Quality	Amount (ppbv)
Limonene	138-86-3	NA	Not Detected

Container Type: 1.4 Liter Canister

Surrogates	%Recovery	Method Limits
1,2-Dichloroethane-d4	100	70-130
Toluene-d8	99	70-130
4-Bromofluorobenzene	97	70-130

eurofins | Air Toxics

Client Sample ID: FLARE STACK-1183
Lab ID#: 1602248A-02A
EPA METHOD TO-15 GC/MS

File Name:	14022514	Date of Collection:	2/11/16 1:25:00 PM
Dil. Factor:	156000	Date of Analysis:	2/25/16 03:11 PM

Compound	Rpt. Limit (ppbv)	Amount (ppbv)	Rpt. Limit (ug/m3)	Amount (ug/m3)
Freon 12	780000	Not Detected	3800000	Not Detected
Freon 114	780000	Not Detected	5400000	Not Detected
Chloromethane	3100000	Not Detected	6400000	Not Detected
Vinyl Chloride	780000	Not Detected	2000000	Not Detected
1,3-Butadiene	780000	1400000	1700000	3000000
Bromomethane	780000	Not Detected	3000000	Not Detected
Chloroethane	3100000	Not Detected	8200000	Not Detected
Freon 11	780000	Not Detected	4400000	Not Detected
Ethanol	3100000	Not Detected	5900000	Not Detected
Freon 113	780000	Not Detected	6000000	Not Detected
1,1-Dichloroethene	780000	Not Detected	3100000	Not Detected
Acetone	3100000	Not Detected	7400000	Not Detected
2-Propanol	3100000	Not Detected	7700000	Not Detected
Carbon Disulfide	780000	Not Detected	2400000	Not Detected
3-Chloropropene	3100000	Not Detected	9800000	Not Detected
Methylene Chloride	780000	Not Detected	2700000	Not Detected
Methyl tert-butyl ether	780000	Not Detected	2800000	Not Detected
trans-1,2-Dichloroethene	780000	Not Detected	3100000	Not Detected
Hexane	780000	Not Detected	2700000	Not Detected
1,1-Dichloroethane	780000	Not Detected	3200000	Not Detected
2-Butanone (Methyl Ethyl Ketone)	3100000	Not Detected	9200000	Not Detected
cis-1,2-Dichloroethene	780000	Not Detected	3100000	Not Detected
Tetrahydrofuran	780000	Not Detected	2300000	Not Detected
Chloroform	780000	Not Detected	3800000	Not Detected
1,1,1-Trichloroethane	780000	Not Detected	4200000	Not Detected
Cyclohexane	780000	Not Detected	2700000	Not Detected
Carbon Tetrachloride	780000	Not Detected	4900000	Not Detected
2,2,4-Trimethylpentane	780000	Not Detected	3600000	Not Detected
Benzene	780000	3000000	2500000	9500000
1,2-Dichloroethane	780000	Not Detected	3200000	Not Detected
Heptane	780000	Not Detected	3200000	Not Detected
Trichloroethene	780000	Not Detected	4200000	Not Detected
1,2-Dichloropropane	780000	Not Detected	3600000	Not Detected
1,4-Dioxane	3100000	Not Detected	11000000	Not Detected
Bromodichloromethane	780000	Not Detected	5200000	Not Detected
cis-1,3-Dichloropropene	780000	Not Detected	3500000	Not Detected
4-Methyl-2-pentanone	780000	Not Detected	3200000	Not Detected
Toluene	780000	2000000	2900000	7600000
trans-1,3-Dichloropropene	780000	Not Detected	3500000	Not Detected
1,1,2-Trichloroethane	780000	Not Detected	4200000	Not Detected
Tetrachloroethene	780000	Not Detected	5300000	Not Detected
2-Hexanone	3100000	Not Detected	13000000	Not Detected

Page 8 of 19

eurofins | Air Toxics

Client Sample ID: FLARE STACK-1183
Lab ID#: 1602248A-02A
EPA METHOD TO-15 GC/MS

File Name:	14022514	**Date of Collection:**	2/11/16 1:25:00 PM
Dil. Factor:	156000	**Date of Analysis:**	2/25/16 03:11 PM

Compound	Rpt. Limit (ppbv)	Amount (ppbv)	Rpt. Limit (ug/m3)	Amount (ug/m3)
Dibromochloromethane	780000	Not Detected	6600000	Not Detected
1,2-Dibromoethane (EDB)	780000	Not Detected	6000000	Not Detected
Chlorobenzene	780000	Not Detected	3600000	Not Detected
Ethyl Benzene	780000	Not Detected	3400000	Not Detected
m,p-Xylene	780000	Not Detected	3400000	Not Detected
o-Xylene	780000	Not Detected	3400000	Not Detected
Styrene	780000	Not Detected	3300000	Not Detected
Bromoform	780000	Not Detected	8100000	Not Detected
Cumene	780000	Not Detected	3800000	Not Detected
1,1,2,2-Tetrachloroethane	780000	Not Detected	5400000	Not Detected
Propylbenzene	780000	Not Detected	3800000	Not Detected
4-Ethyltoluene	780000	Not Detected	3800000	Not Detected
1,3,5-Trimethylbenzene	780000	Not Detected	3800000	Not Detected
1,2,4-Trimethylbenzene	780000	Not Detected	3800000	Not Detected
1,3-Dichlorobenzene	780000	Not Detected	4700000	Not Detected
1,4-Dichlorobenzene	780000	Not Detected	4700000	Not Detected
alpha-Chlorotoluene	780000	Not Detected	4000000	Not Detected
1,2-Dichlorobenzene	780000	Not Detected	4700000	Not Detected
1,2,4-Trichlorobenzene	3100000	Not Detected	23000000	Not Detected
Hexachlorobutadiene	3100000	Not Detected	33000000	Not Detected
Indene	3100000	Not Detected	15000000	Not Detected
Propane	3100000	57000000 E	5600000	100000000 E

TENTATIVELY IDENTIFIED COMPOUNDS

Compound	CAS Number	Match Quality	Amount (ppbv)
Limonene	138-86-3	NA	Not Detected

E = Exceeds instrument calibration range.

Container Type: 1.4 Liter Canister

Surrogates	%Recovery	Method Limits
1,2-Dichloroethane-d4	100	70-130
Toluene-d8	97	70-130
4-Bromofluorobenzene	98	70-130

eurofins | Air Toxics

Client Sample ID: FLARE STACK-1166
Lab ID#: 1602248A-03A
EPA METHOD TO-15 GC/MS

File Name:	14022515	Date of Collection:	2/11/16 3:32:00 PM
Dil. Factor:	141000	Date of Analysis:	2/25/16 03:42 PM

Compound	Rpt. Limit (ppbv)	Amount (ppbv)	Rpt. Limit (ug/m3)	Amount (ug/m3)
Freon 12	700000	Not Detected	3500000	Not Detected
Freon 114	700000	Not Detected	4900000	Not Detected
Chloromethane	2800000	Not Detected	5800000	Not Detected
Vinyl Chloride	700000	Not Detected	1800000	Not Detected
1,3-Butadiene	700000	1600000	1600000	3500000
Bromomethane	700000	Not Detected	2700000	Not Detected
Chloroethane	2800000	Not Detected	7400000	Not Detected
Freon 11	700000	Not Detected	4000000	Not Detected
Ethanol	2800000	Not Detected	5300000	Not Detected
Freon 113	700000	Not Detected	5400000	Not Detected
1,1-Dichloroethene	700000	Not Detected	2800000	Not Detected
Acetone	2800000	Not Detected	6700000	Not Detected
2-Propanol	2800000	Not Detected	6900000	Not Detected
Carbon Disulfide	700000	Not Detected	2200000	Not Detected
3-Chloropropene	2800000	Not Detected	8800000	Not Detected
Methylene Chloride	700000	Not Detected	2400000	Not Detected
Methyl tert-butyl ether	700000	Not Detected	2500000	Not Detected
trans-1,2-Dichloroethene	700000	Not Detected	2800000	Not Detected
Hexane	700000	Not Detected	2500000	Not Detected
1,1-Dichloroethane	700000	Not Detected	2800000	Not Detected
2-Butanone (Methyl Ethyl Ketone)	2800000	Not Detected	8300000	Not Detected
cis-1,2-Dichloroethene	700000	Not Detected	2800000	Not Detected
Tetrahydrofuran	700000	Not Detected	2100000	Not Detected
Chloroform	700000	Not Detected	3400000	Not Detected
1,1,1-Trichloroethane	700000	Not Detected	3800000	Not Detected
Cyclohexane	700000	Not Detected	2400000	Not Detected
Carbon Tetrachloride	700000	Not Detected	4400000	Not Detected
2,2,4-Trimethylpentane	700000	Not Detected	3300000	Not Detected
Benzene	700000	3100000	2200000	9900000
1,2-Dichloroethane	700000	Not Detected	2800000	Not Detected
Heptane	700000	Not Detected	2900000	Not Detected
Trichloroethene	700000	Not Detected	3800000	Not Detected
1,2-Dichloropropane	700000	Not Detected	3200000	Not Detected
1,4-Dioxane	2800000	Not Detected	10000000	Not Detected
Bromodichloromethane	700000	Not Detected	4700000	Not Detected
cis-1,3-Dichloropropene	700000	Not Detected	3200000	Not Detected
4-Methyl-2-pentanone	700000	Not Detected	2900000	Not Detected
Toluene	700000	1800000	2600000	6800000
trans-1,3-Dichloropropene	700000	Not Detected	3200000	Not Detected
1,1,2-Trichloroethane	700000	Not Detected	3800000	Not Detected
Tetrachloroethene	700000	Not Detected	4800000	Not Detected
2-Hexanone	2800000	Not Detected	12000000	Not Detected

Page 10 of 19

eurofins | Air Toxics

Client Sample ID: FLARE STACK-1166
Lab ID#: 1602248A-03A
EPA METHOD TO-15 GC/MS

File Name:	**14022515**	**Date of Collection:**	**2/11/16 3:32:00 PM**
Dil. Factor:	**141000**	**Date of Analysis:**	**2/25/16 03:42 PM**

Compound	Rpt. Limit (ppbv)	Amount (ppbv)	Rpt. Limit (ug/m3)	Amount (ug/m3)
Dibromochloromethane	700000	Not Detected	6000000	Not Detected
1,2-Dibromoethane (EDB)	700000	Not Detected	5400000	Not Detected
Chlorobenzene	700000	Not Detected	3200000	Not Detected
Ethyl Benzene	700000	Not Detected	3100000	Not Detected
m,p-Xylene	700000	Not Detected	3100000	Not Detected
o-Xylene	700000	Not Detected	3100000	Not Detected
Styrene	700000	Not Detected	3000000	Not Detected
Bromoform	700000	Not Detected	7300000	Not Detected
Cumene	700000	Not Detected	3500000	Not Detected
1,1,2,2-Tetrachloroethane	700000	Not Detected	4800000	Not Detected
Propylbenzene	700000	Not Detected	3500000	Not Detected
4-Ethyltoluene	700000	Not Detected	3500000	Not Detected
1,3,5-Trimethylbenzene	700000	Not Detected	3500000	Not Detected
1,2,4-Trimethylbenzene	700000	Not Detected	3500000	Not Detected
1,3-Dichlorobenzene	700000	Not Detected	4200000	Not Detected
1,4-Dichlorobenzene	700000	Not Detected	4200000	Not Detected
alpha-Chlorotoluene	700000	Not Detected	3600000	Not Detected
1,2-Dichlorobenzene	700000	Not Detected	4200000	Not Detected
1,2,4-Trichlorobenzene	2800000	Not Detected	21000000	Not Detected
Hexachlorobutadiene	2800000	Not Detected	30000000	Not Detected
Indene	2800000	Not Detected	13000000	Not Detected
Propane	2800000	65000000 E	5100000	120000000 E

TENTATIVELY IDENTIFIED COMPOUNDS

Compound	CAS Number	Match Quality	Amount (ppbv)
Limonene	138-86-3	NA	Not Detected

E = Exceeds instrument calibration range.

Container Type: 1.4 Liter Canister

Surrogates	%Recovery	Method Limits
1,2-Dichloroethane-d4	99	70-130
Toluene-d8	97	70-130
4-Bromofluorobenzene	97	70-130

eurofins | Air Toxics

Client Sample ID: Lab Blank
Lab ID#: 1602248A-04A
EPA METHOD TO-15 GC/MS

File Name:	14022509a	Date of Collection: NA	
Dil. Factor:	1.00	Date of Analysis: 2/25/16 12:14 PM	

Compound	Rpt. Limit (ppbv)	Amount (ppbv)	Rpt. Limit (ug/m3)	Amount (ug/m3)
Freon 12	5.0	Not Detected	25	Not Detected
Freon 114	5.0	Not Detected	35	Not Detected
Chloromethane	20	Not Detected	41	Not Detected
Vinyl Chloride	5.0	Not Detected	13	Not Detected
1,3-Butadiene	5.0	Not Detected	11	Not Detected
Bromomethane	5.0	Not Detected	19	Not Detected
Chloroethane	20	Not Detected	53	Not Detected
Freon 11	5.0	Not Detected	28	Not Detected
Ethanol	20	Not Detected	38	Not Detected
Freon 113	5.0	Not Detected	38	Not Detected
1,1-Dichloroethene	5.0	Not Detected	20	Not Detected
Acetone	20	Not Detected	48	Not Detected
2-Propanol	20	Not Detected	49	Not Detected
Carbon Disulfide	5.0	Not Detected	16	Not Detected
3-Chloropropene	20	Not Detected	63	Not Detected
Methylene Chloride	5.0	Not Detected	17	Not Detected
Methyl tert-butyl ether	5.0	Not Detected	18	Not Detected
trans-1,2-Dichloroethene	5.0	Not Detected	20	Not Detected
Hexane	5.0	Not Detected	18	Not Detected
1,1-Dichloroethane	5.0	Not Detected	20	Not Detected
2-Butanone (Methyl Ethyl Ketone)	20	Not Detected	59	Not Detected
cis-1,2-Dichloroethene	5.0	Not Detected	20	Not Detected
Tetrahydrofuran	5.0	Not Detected	15	Not Detected
Chloroform	5.0	Not Detected	24	Not Detected
1,1,1-Trichloroethane	5.0	Not Detected	27	Not Detected
Cyclohexane	5.0	Not Detected	17	Not Detected
Carbon Tetrachloride	5.0	Not Detected	31	Not Detected
2,2,4-Trimethylpentane	5.0	Not Detected	23	Not Detected
Benzene	5.0	Not Detected	16	Not Detected
1,2-Dichloroethane	5.0	Not Detected	20	Not Detected
Heptane	5.0	Not Detected	20	Not Detected
Trichloroethene	5.0	Not Detected	27	Not Detected
1,2-Dichloropropane	5.0	Not Detected	23	Not Detected
1,4-Dioxane	20	Not Detected	72	Not Detected
Bromodichloromethane	5.0	Not Detected	34	Not Detected
cis-1,3-Dichloropropene	5.0	Not Detected	23	Not Detected
4-Methyl-2-pentanone	5.0	Not Detected	20	Not Detected
Toluene	5.0	Not Detected	19	Not Detected
trans-1,3-Dichloropropene	5.0	Not Detected	23	Not Detected
1,1,2-Trichloroethane	5.0	Not Detected	27	Not Detected
Tetrachloroethene	5.0	Not Detected	34	Not Detected
2-Hexanone	20	Not Detected	82	Not Detected

eurofins | Air Toxics

Client Sample ID: Lab Blank
Lab ID#: 1602248A-04A
EPA METHOD TO-15 GC/MS

File Name:	14022509a	**Date of Collection: NA**	
Dil. Factor:	1.00	**Date of Analysis: 2/25/16 12:14 PM**	

Compound	Rpt. Limit (ppbv)	Amount (ppbv)	Rpt. Limit (ug/m3)	Amount (ug/m3)
Dibromochloromethane	5.0	Not Detected	42	Not Detected
1,2-Dibromoethane (EDB)	5.0	Not Detected	38	Not Detected
Chlorobenzene	5.0	Not Detected	23	Not Detected
Ethyl Benzene	5.0	Not Detected	22	Not Detected
m,p-Xylene	5.0	Not Detected	22	Not Detected
o-Xylene	5.0	Not Detected	22	Not Detected
Styrene	5.0	Not Detected	21	Not Detected
Bromoform	5.0	Not Detected	52	Not Detected
Cumene	5.0	Not Detected	24	Not Detected
1,1,2,2-Tetrachloroethane	5.0	Not Detected	34	Not Detected
Propylbenzene	5.0	Not Detected	24	Not Detected
4-Ethyltoluene	5.0	Not Detected	24	Not Detected
1,3,5-Trimethylbenzene	5.0	Not Detected	24	Not Detected
1,2,4-Trimethylbenzene	5.0	Not Detected	24	Not Detected
1,3-Dichlorobenzene	5.0	Not Detected	30	Not Detected
1,4-Dichlorobenzene	5.0	Not Detected	30	Not Detected
alpha-Chlorotoluene	5.0	Not Detected	26	Not Detected
1,2-Dichlorobenzene	5.0	Not Detected	30	Not Detected
1,2,4-Trichlorobenzene	20	Not Detected	150	Not Detected
Hexachlorobutadiene	20	Not Detected	210	Not Detected
Indene	20	Not Detected	95	Not Detected
Propane	20	Not Detected	36	Not Detected

TENTATIVELY IDENTIFIED COMPOUNDS

Compound	CAS Number	Match Quality	Amount (ppbv)
Limonene	138-86-3	NA	Not Detected

Container Type: NA - Not Applicable

Surrogates	%Recovery	Method Limits
1,2-Dichloroethane-d4	102	70-130
Toluene-d8	99	70-130
4-Bromofluorobenzene	101	70-130

eurofins | Air Toxics

Client Sample ID: CCV
Lab ID#: 1602248A-05A
EPA METHOD TO-15 GC/MS

File Name:	14022502	Date of Collection: NA
Dil. Factor:	1.00	Date of Analysis: 2/25/16 08:46 AM

Compound	%Recovery
Freon 12	93
Freon 114	95
Chloromethane	97
Vinyl Chloride	94
1,3-Butadiene	89
Bromomethane	85
Chloroethane	103
Freon 11	92
Ethanol	99
Freon 113	93
1,1-Dichloroethene	92
Acetone	101
2-Propanol	104
Carbon Disulfide	94
3-Chloropropene	93
Methylene Chloride	92
Methyl tert-butyl ether	133 Q
trans-1,2-Dichloroethene	94
Hexane	97
1,1-Dichloroethane	98
2-Butanone (Methyl Ethyl Ketone)	102
cis-1,2-Dichloroethene	96
Tetrahydrofuran	101
Chloroform	95
1,1,1-Trichloroethane	102
Cyclohexane	94
Carbon Tetrachloride	96
2,2,4-Trimethylpentane	98
Benzene	92
1,2-Dichloroethane	92
Heptane	90
Trichloroethene	80
1,2-Dichloropropane	92
1,4-Dioxane	93
Bromodichloromethane	92
cis-1,3-Dichloropropene	102
4-Methyl-2-pentanone	94
Toluene	89
trans-1,3-Dichloropropene	110
1,1,2-Trichloroethane	90
Tetrachloroethene	94
2-Hexanone	96

eurofins | Air Toxics

Client Sample ID: CCV
Lab ID#: 1602248A-05A
EPA METHOD TO-15 GC/MS

File Name:	14022502	**Date of Collection: NA**	
Dil. Factor:	1.00	**Date of Analysis: 2/25/16 08:46 AM**	

Compound	%Recovery
Dibromochloromethane	90
1,2-Dibromoethane (EDB)	96
Chlorobenzene	89
Ethyl Benzene	92
m,p-Xylene	90
o-Xylene	95
Styrene	92
Bromoform	94
Cumene	94
1,1,2,2-Tetrachloroethane	97
Propylbenzene	91
4-Ethyltoluene	90
1,3,5-Trimethylbenzene	93
1,2,4-Trimethylbenzene	92
1,3-Dichlorobenzene	90
1,4-Dichlorobenzene	88
alpha-Chlorotoluene	114
1,2-Dichlorobenzene	86
1,2,4-Trichlorobenzene	74
Hexachlorobutadiene	89
Indene	100
Propane	103

Q = Exceeds Quality Control limits.

Container Type: NA - Not Applicable

Surrogates	%Recovery	Method Limits
1,2-Dichloroethane-d4	103	70-130
Toluene-d8	97	70-130
4-Bromofluorobenzene	103	70-130

eurofins | Air Toxics

Client Sample ID: LCS
Lab ID#: 1602248A-06A
EPA METHOD TO-15 GC/MS

File Name:	14022503	**Date of Collection: NA**	
Dil. Factor:	1.00	**Date of Analysis: 2/25/16 09:21 AM**	

Compound	%Recovery	Method Limits
Freon 12	120	70-130
Freon 114	127	70-130
Chloromethane	118	70-130
Vinyl Chloride	121	70-130
1,3-Butadiene	114	70-130
Bromomethane	112	70-130
Chloroethane	132 Q	70-130
Freon 11	122	70-130
Ethanol	90	70-130
Freon 113	115	70-130
1,1-Dichloroethene	114	70-130
Acetone	121	70-130
2-Propanol	127	70-130
Carbon Disulfide	102	70-130
3-Chloropropene	115	70-130
Methylene Chloride	115	70-130
Methyl tert-butyl ether	127	70-130
trans-1,2-Dichloroethene	123	70-130
Hexane	124	70-130
1,1-Dichloroethane	122	70-130
2-Butanone (Methyl Ethyl Ketone)	124	70-130
cis-1,2-Dichloroethene	118	70-130
Tetrahydrofuran	124	70-130
Chloroform	121	70-130
1,1,1-Trichloroethane	124	70-130
Cyclohexane	125	70-130
Carbon Tetrachloride	126	70-130
2,2,4-Trimethylpentane	127	70-130
Benzene	121	70-130
1,2-Dichloroethane	118	70-130
Heptane	122	70-130
Trichloroethene	114	70-130
1,2-Dichloropropane	120	70-130
1,4-Dioxane	122	70-130
Bromodichloromethane	121	70-130
cis-1,3-Dichloropropene	121	70-130
4-Methyl-2-pentanone	123	70-130
Toluene	119	70-130
trans-1,3-Dichloropropene	140 Q	70-130
1,1,2-Trichloroethane	120	70-130
Tetrachloroethene	125	70-130
2-Hexanone	125	70-130

Page 16 of 19

eurofins | Air Toxics

Client Sample ID: LCS
Lab ID#: 1602248A-06A
EPA METHOD TO-15 GC/MS

File Name:	14022503	**Date of Collection: NA**	
Dil. Factor:	1.00	**Date of Analysis: 2/25/16 09:21 AM**	

Compound	%Recovery	Method Limits
Dibromochloromethane	120	70-130
1,2-Dibromoethane (EDB)	126	70-130
Chlorobenzene	121	70-130
Ethyl Benzene	121	70-130
m,p-Xylene	124	70-130
o-Xylene	126	70-130
Styrene	132 Q	70-130
Bromoform	129	70-130
Cumene	129	70-130
1,1,2,2-Tetrachloroethane	120	70-130
Propylbenzene	125	70-130
4-Ethyltoluene	124	70-130
1,3,5-Trimethylbenzene	123	70-130
1,2,4-Trimethylbenzene	122	70-130
1,3-Dichlorobenzene	119	70-130
1,4-Dichlorobenzene	117	70-130
alpha-Chlorotoluene	141 Q	70-130
1,2-Dichlorobenzene	111	70-130
1,2,4-Trichlorobenzene	75	70-130
Hexachlorobutadiene	92	70-130
Indene	Not Spiked	
Propane	Not Spiked	

Q = Exceeds Quality Control limits.
Container Type: NA - Not Applicable

Surrogates	%Recovery	Method Limits
1,2-Dichloroethane-d4	98	70-130
Toluene-d8	98	70-130
4-Bromofluorobenzene	106	70-130

eurofins | Air Toxics

Client Sample ID: LCSD
Lab ID#: 1602248A-06AA
EPA METHOD TO-15 GC/MS

File Name:	14022504	Date of Collection: NA	
Dil. Factor:	1.00	Date of Analysis: 2/25/16 09:51 AM	

Compound	%Recovery	Method Limits
Freon 12	121	70-130
Freon 114	127	70-130
Chloromethane	114	70-130
Vinyl Chloride	118	70-130
1,3-Butadiene	114	70-130
Bromomethane	107	70-130
Chloroethane	127	70-130
Freon 11	125	70-130
Ethanol	89	70-130
Freon 113	115	70-130
1,1-Dichloroethene	115	70-130
Acetone	118	70-130
2-Propanol	130	70-130
Carbon Disulfide	103	70-130
3-Chloropropene	111	70-130
Methylene Chloride	114	70-130
Methyl tert-butyl ether	128	70-130
trans-1,2-Dichloroethene	125	70-130
Hexane	123	70-130
1,1-Dichloroethane	122	70-130
2-Butanone (Methyl Ethyl Ketone)	120	70-130
cis-1,2-Dichloroethene	117	70-130
Tetrahydrofuran	124	70-130
Chloroform	117	70-130
1,1,1-Trichloroethane	125	70-130
Cyclohexane	118	70-130
Carbon Tetrachloride	127	70-130
2,2,4-Trimethylpentane	126	70-130
Benzene	122	70-130
1,2-Dichloroethane	122	70-130
Heptane	119	70-130
Trichloroethene	116	70-130
1,2-Dichloropropane	120	70-130
1,4-Dioxane	126	70-130
Bromodichloromethane	121	70-130
cis-1,3-Dichloropropene	121	70-130
4-Methyl-2-pentanone	126	70-130
Toluene	117	70-130
trans-1,3-Dichloropropene	134 Q	70-130
1,1,2-Trichloroethane	114	70-130
Tetrachloroethene	122	70-130
2-Hexanone	129	70-130

Page 18 of 19

eurofins | Air Toxics

Client Sample ID: LCSD
Lab ID#: 1602248A-06AA
EPA METHOD TO-15 GC/MS

File Name:	14022504	**Date of Collection: NA**	
Dil. Factor:	1.00	**Date of Analysis: 2/25/16 09:51 AM**	

Compound	%Recovery	Method Limits
Dibromochloromethane	118	70-130
1,2-Dibromoethane (EDB)	121	70-130
Chlorobenzene	114	70-130
Ethyl Benzene	117	70-130
m,p-Xylene	120	70-130
o-Xylene	123	70-130
Styrene	126	70-130
Bromoform	126	70-130
Cumene	124	70-130
1,1,2,2-Tetrachloroethane	116	70-130
Propylbenzene	121	70-130
4-Ethyltoluene	119	70-130
1,3,5-Trimethylbenzene	121	70-130
1,2,4-Trimethylbenzene	118	70-130
1,3-Dichlorobenzene	118	70-130
1,4-Dichlorobenzene	111	70-130
alpha-Chlorotoluene	139 Q	70-130
1,2-Dichlorobenzene	107	70-130
1,2,4-Trichlorobenzene	79	70-130
Hexachlorobutadiene	93	70-130
Indene	Not Spiked	
Propane	Not Spiked	

Q = Exceeds Quality Control limits.
Container Type: NA - Not Applicable

Surrogates	%Recovery	Method Limits
1,2-Dichloroethane-d4	99	70-130
Toluene-d8	100	70-130
4-Bromofluorobenzene	103	70-130

Measured FLARE stack parameters

3-18-16
Measured at Flare inspection port, 8" stack Dia.
Outdoor temp 43F
Barometric Pressure 30.09
Humidity 73%
Wind NW @ 8 mph
Dry Bulb 43F
Wet Bulb 40F
Digital Anemometer 24 cfm
Draeger Tube - H2S ppm = 0
Draeger Tube - O2 = 6%
Flare opacity, method 9 = 0

Feederate at 300 lbs/hr

CF500/ CF800

Oil Burner Manual

Beckett™
COMMERCIAL PRODUCTS

c UL US

WARNING **Potential for Fire, Smoke and Asphyxiation Hazards**

Incorrect installation, adjustment, or misuse of this burner could result in death, severe personal injury, or substantial property damage.

To the Homeowner or Equipment Owner:

- Please read and carefully follow all instructions provided in this manual regarding your responsibilities in caring for your heating equipment.
- Contact a professional, qualified service agency for installation, start-up or service work.
- Save this manual for future reference.

To the Professional, Qualified Installer or Service Agency:

- Please read and carefully follow all instructions provided in this manual before installing, starting, or servicing this burner or heating system.
- The Installation must be made in accordance with all state and local codes having jurisdiction.

To the Owner:

Thank you for purchasing a Beckett burner for use with your heating appliance. Please pay attention to the Safety Warnings contained within this instruction manual. Keep this manual for your records and provide it to your qualified service agency for use in professionally setting up and maintaining your oil burner.

READ THESE INSTRUCTIONS AND SAVE FOR REFERENCE

Your Beckett burner will provide years of efficient operation if it is professionally installed and maintained by a qualified service technician. If at any time the burner does not appear to be operating properly, **immediately contact your qualified service agency** for consultation.

We recommend annual inspection/ service of your oil heating system by a qualified service agency.

Daily – Check the room in which your burner/appliance is installed. Make sure:

- Air ventilation openings are clean and unobstructed
- Nothing is blocking burner inlet air openings
- No combustible materials are stored near the heating appliance
- There are no signs of oil or water leaking around the burner or appliance

Weekly

- Check your oil tank level. Always keep your oil tank full, especially during the summer, in order to prevent condensation of moisture on the inside surface of the tank.

Contents

General Information 4
- Hazard Definitions 4
- Agency approvals 4
- Specifications 4
- Owner's Responsibility: 5
- Professional Installer/Service Agency Responsibility: 5

Pre-installation Checklist 5
- Combustion air supply 5
- Clearances 5
- Fuel supply 5
- Nozzle Pressure 6
- Electrical Supply 6
- Verify Burner Components 6
- Vent System 6
- Verify Firing Rate 7
- Verify air tube 7
- Stray Light 8
- Dust and Moisture 8

Mount the Burner 8
- Mount flange(s) on air tube 9
- Mount air tube to burner 9
- Install nozzle 9
- Check electrode settings 9
- Install nozzle line assembly 9
- Set dimension Z 10
- Insert burner 10
- Fuel unit by-pass plug 10
- Oil supply/return lines 10
- Burner fuel flow 11

Wire the Burner 11
- Typical Burner Sequence of Operation - 7505 Control. 14
- Typical Burner Wiring - 7505 Control 15
- Reset Button Operation 15
- Typical Burner Sequence of Operation - R7184P Control. 16

Prepare the Burner for Start-up 17
- Initial air settings (***Table 5***) 18
- Set appliance limit controls 18
- Prepare the fuel unit for air venting 18

Start the Burner 19
- Starting the burner and venting air 19
- Disable function 19
- Cad Cell Resistance Measurement 20
- Resetting From Restricted or Hard Lockout 20
- Set combustion using instruments 20

Maintenance and Service 21

Replacement parts 22

Limited Warranty Information 24

General Information

Hazard Definitions

DANGER **Indicates a hazardous situation, which, if not avoided, will result in death or serious injury.**

WARNING **Indicates a hazardous situation, which, if not avoided, could result in death or serious injury.**

CAUTION **Indicates a hazardous situation, which, if not avoided, could result in minor or moderate injury.**

Within the boundaries of the hazard warning, there will be information presented describing consequences if the warning is not heeded and instructions on how to avoid the hazard.

NOTICE Intended to bring special attention to information, but not related to personal injury or property damage.

Agency approvals

- UL listed to comply with ANSI/UL296 and certified to CSA B140.0.
- Accepted by N.Y.C. M.E.A.
- Other approvals may be available and must be specified at time of order.

CAUTION **Frozen Plumbing and Water Damage Hazard**

If the residence is unattended in severely cold weather, burner primary control safety lockout, heating system component failures, power outages or other electrical system failures could result in frozen plumbing and water damage in a matter of hours. For protection, take preventive actions such as having a security system installed that operates during power outages, senses low temperature and initiates an effective action. Consult with your heating contractor or a home security agency.

Specifications

Fuels	**CAUTION** **DO NOT USE GASOLINE, CRANKCASE OIL, OR ANY OIL CONTAINING GASOLINE** **U.S.** #1 or #2 Fuel Oil only (ASTM D396) **Canada** #1 Stove Oil or #2 Furnace Oil only
Firing range	CF500: 1.75 to 5.50 GPH CF800: 3.00 to 8.00 GPH
Motor	1/3 HP 3450 RPM 120/60 hz standard 4.8 amps @ 120 VAC
Igniter	120V/14,000V
Housing	Cast aluminum
Fuel unit	100 - 200 PSIG
Oil nozzle	45° - 70° solid
Shipping weight	55 lbs.

NOTICE **50 Hz Motors** — The burner ratings, air settings and nozzle ratings are based on standard 60 hz motors (at 3450 rpm). Derate all ratings 20% when using 50 hz motors. Consult factory for specific application data.

NOTICE **High Altitude Installations** — Accepted industry practice requires no derate of burner capacity up to 2,000 feet above sea level. For altitudes higher than 2,000 feet, derate burner capacity 2% for each 1000 feet above sea level.

Owner's Responsibility:

WARNING **Follow These Instructions Exactly**

Failure to follow these instructions, misuse, or incorrect adjustment of the burner could lead to equipment malfunction and result in asphyxiation, explosion or fire.

Contact a professional, qualified service agency for the installation, adjustment and service of your oil burning system. Thereafter, have your equipment adjusted and inspected at least annually to ensure reliable operation. This work requires technical training, trade experience, licensing or certification in some states and the proper use of special combustion test instruments.

Please carefully read and comply with the following instructions:

- Never store or use gasoline or other flammable liquids or vapors near this burner or appliance.
- Never attempt to burn garbage or refuse in this appliance.
- Never attempt to light the burner by throwing burning material into the appliance.
- Never attempt to burn any fuel not specified and approved for use in this burner.
- Never restrict the air inlet openings to the burner or the combustion air ventilation openings in the room.

Professional Installer/Service Agency Responsibility:

WARNING **Follow These Instructions Exactly**

Failure to follow these instructions could lead to equipment malfunction and result in asphyxiation, explosion or fire.

- Please read all instructions before proceeding. Follow all instructions completely.
- This equipment must be installed, adjusted and started by a qualified service agency that is experienced with all applicable codes and ordinances and responsible for the installation and commission of the equipment.
- The installation must comply with all local codes and ordinances having jurisdiction and the latest editions of the NFPA 31 and CSA-B139 & B140 in Canada.

Pre-installation Checklist

Combustion air supply

WARNING **Adequate Combustion & Ventilation Air Supply Required**

Failure to provide adequate air supply could seriously affect the burner performance and result in damage to the equipment, asphyxiation, explosion or fire hazards.

- The burner cannot properly burn the fuel if it is not supplied with a reliable combustion air source.
- Follow the guidelines in the latest editions of the NFPA 31 and CSA-B139 regarding providing adequate air for combustion and ventilation.

The burner requires combustion air and ventilation air for reliable operation. Assure that the building and/or combustion air openings comply with National Fire Protection Standard for Oil-Burning Equipment, NFPA 31. For appliance/burner units in confined spaces, the room must have an air opening near the top of the room plus one near the floor, each with a free area at least one square inch per 1,000 Btu/hr input of all fuel burning equipment in the room. For other conditions, refer to NFPA 31 (CSA B1139-M91 in Canada).

If there is a risk of the space being under negative pressure or of exhaust fans or other devices depleting available air for combustion and ventilation, the appliance/burner should be installed in an isolated room provided with outside combustion air.

Clearances

With the burner installed in the appliance, there must be adequate space in front of and on the sides of the burner to allow access and operation. Verify that the clearance dimensions comply with all local codes and with the appliance manufacturer's recommendations.

Fuel supply

CAUTION **Oil Supply Pressure Control Required**

Damage to the pump, filter or other component seals could cause possible oil leakage and potential fire hazard.

- The oil supply inlet pressure to the fuel unit cannot exceed 3 psig.
- Ensure that a pressure-limiting device is installed in accordance with the latest edition of the NFPA 31.

The fuel supply piping and tank must provide #1 or #2 fuel oil at pressure or vacuum conditions suitable for

the fuel unit (oil pump) on the burner. Refer to fuel unit literature in the literature envelope in the burner carton to verify allowable suction pressure.

If fuel supply is ***level with or higher than*** fuel unit —

When the fuel unit is not required to lift the oil, the installation is usually suitable for either a one-pipe or two-pipe oil system. The oil pressure at the inlet of the fuel unit must not exceed 3 psig.
Refer to the *Mount the Burner* Section of this manual for one-pipe or two-pipe fuel supply installation instructions.

If fuel supply is ***below*** the fuel unit —

Use a two-pipe oil system when the fuel unit must lift the oil more than 8 feet if burner is equipped with a **B** fuel unit. The return line provided by the two-pipe system is needed to purge the air from the fuel lines and minimize the likelihood of air-related problems during operation.

Nozzle Pressure

WARNING **Correct Nozzle and Flow Rate Required**

Incorrect nozzles and flow rates could result in impaired combustion, under-firing, over-firing, sooting, puff-back of hot gases, smoke and potential fire or asphyxiation hazards.

Use only nozzles having the brand, flow rate (gph), spray angle and pattern specified by the appliance manufacturer. Follow the appliance manufacturer's specifications for the required pump outlet pressure for the nozzle, since this affects the flow rate.

- Nozzle manufacturers calibrate nozzle flow rates at 100 psig.
- This burner utilizes pressures higher than 100 psig, so the actual nozzle flow rate will be greater than the gph stamped on the nozzle body. (Example: A 2.00 gph nozzle at 140 psig = 2.37 gph.
- For typical nozzle flow rates at various pressures see ***Table 1***.

The fuel unit nozzle port pressure is factory set at 140 psig. Some original equipment manufacturer burner applications may call for a lower pressure to obtain a required firing rate. Do not change this pressure unless directed to do so by the appliance manufacturer.

Electrical Supply

Verify that the power connections available are correct for the burner. Refer to ***Figure 1***. All power must be supplied through fused disconnect switches.

Verify Burner Components

- **Burner**, Model CF500 or CF800
- **Air tube assembly**
- **Mounting flange kit**
- **Oil nozzle**, per ***Table 1*** — Only 45° to 70° solid pattern nozzles are recommended unless otherwise specified by appliance manufacturer. (See specific appliance recommendation sheet or refer to OEM Spec Guide). Find the required firing rate in the 140 psig column (factory-set fuel unit pressure). Select the corresponding nozzle from column 1 (***Rated gph @ 100 psig***).

Vent System

Table 1 - Nozzle Capacities

Rated gph @ 100 psig	Pressure - Pounds per square inch	
	140	150
1.75	2.07	2.14
2.00	2.37	2.45
2.25	2.66	2.74
2.50	2.96	3.06
2.75	3.24	3.37
3.00	3.55	3.68
3.50	4.13	4.29
4.00	4.70	4.90
4.50	5.30	5.51
5.00	5.90	6.13
5.50	6.50	6.74
6.00	7.10	7.33
6.50	7.65	7.96

The flue gas venting system must be in good condition and must comply with all applicable codes.

Figure 1. Typical Nameplate

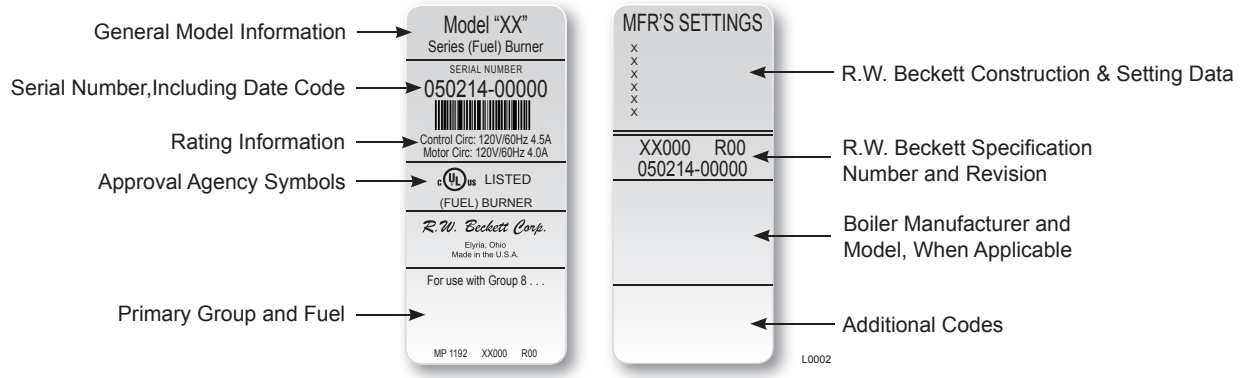

Inspect Chimney or Direct Vent System

WARNING **Fire, Smoke & Asphyxiation Hazard**

- Carefully inspect the chimney or exhaust vent system.
- Make sure it is properly sized and in good working condition.
- Follow the instructions supplied by the appliance manufacturer.
- The installation must strictly comply with all applicable codes, authorities having jurisdiction and the latest revision of the National Fire Protection Association Standard NFPA 31 for the installation of chimneys and vent sizing, (or CSA-B139 and CSA-B140 in Canada).
- Regulation by these authorities take precedence over the general instructions provided in this manual.

1. Starting with minimum gph firing rate, the minimum size recommended is 8” flue pipe with 8” X 8” inside chimney, unless specified otherwise by the appliance manufacturer.
2. A chimney flue shall extend at least 3 feet above the highest point at which the chimney comes in contact with the roof, and not less than 2 feet above the highest roof surface or structure within 10 feet horizontally of the chimney. Refer to ***Figure 2***.
3. Any accumulation of soot or debris in chimney offsets should be removed
4. Any obstructions such as a protruding joint or a piece of broken tile wedged in the chimney should be removed.
5. No other appliance connection should be made to the same flue pipe.
6. The flue pipe should have an upward pitch toward the chimney of at least 1/4” per foot of length. It should fit tightly and should not project into the chimney.
7. Any leakage between tiles, around clean-out doors, or around the vent pipe should be sealed.

INSULATED STAINLESS STEEL CHIMNEY LINERS

The new designs of high efficiency oil furnaces and boilers in conjunction with flame retention oil burners are more efficient. One result of increased efficiency is lower flue gas temperatures. As flue gases rise in the chimney, they will cool and condense when they reach the dew point. The condensation will mix with the sulphur in the flue gases creating sulphuric acid. The acid will attack the chimney mortar, brick and clay liners causing corrosion, deterioration and blockage of the chimney. Eventually the blockage could prevent exhausting the flue gases. Instead, the flue gases could vent out the barometric damper into the living space.

Therefore, it is strongly recommended that an approved insulated stainless steel liner be installed.

Verify Firing Rate

Refer to appliance manufacturer’s instructions (if available) for firing rate and nozzle selection. Otherwise, the maximum recommended firing rate for the burner depends on the length of the firing chamber and the distance from the burner center to the chamber floor. Verify that the chamber dimensions are at least as large as the minimum values given in ***Figure 2***. If the appliance dimensions are smaller than recommended, reduce the firing rate accordingly.

Figure 2. - Dimensions: Minimum Combustion Chamber and Air Tube Mounting.

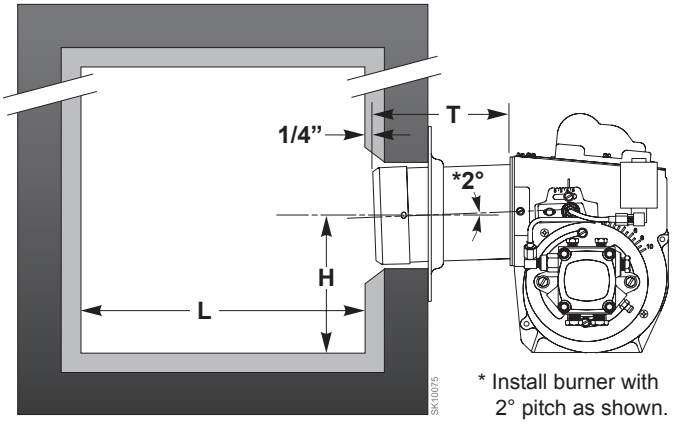

Firing Rate	Minimum Dimensions			
	(with damper)		(without damper)	
	H	L	H	L
1.75 to 3.00 gph	7.5”	18.0”	8.0”	19.0”
4.00 gph	8.0”	21.0”	9.5”	23.0”
5.00 gph	9.0”	23.0”	10.5”	30.0”
6.00 gph	10.0”	28.0”	11.5”	40.0”
7.00 gph	11.0”	34.0”	12.0”	46.0”
8.00 gph	14.0”	38.0”	14.0”	51.0”

Air Tube Length (Dimension T)	A.T.C. Codes (A.T.C. = Air Tube Combination)		
	CF500	CF800	
		Tube A	Tube B
6.00”	CF 60 KK	CF 60 KH	CF 60 KJ
8.00”	CF 80 KK	CF 80 KH	CF 80 KJ
10.00”	CF 100 KK	CF 100 KH	CF 100 KJ
14.00”	CF 140 KK	CF 140 KH	CF 140 KJ
16.00”	CF160 KK	--	--
17.00”	--	CF 170 KH	CF 170 KJ

Verify air tube

The information in this section may be disregarded if the air tube is supplied by the appliance manufacturer.

Two tube arrangements are available –

- CF500 1.75 to 5.50 GPH
- CF800 Tube **A** — 3.00 to 7.00 GPH
  Tube **B** — 5.00 to 8.00 GPH

Maximum firing capacity depends on the firebox pressure. Use ***Table 2*** to verify the correct air tube type for the firing rate required. Use Tube **B** only when Tube **A** cannot provide the firing rate required.

See ***Figure 2*** to verify the correct air tube length and air tube combination code.

Table 2 - Air tube capacities vs firebox pressure

Firebox pressure (in w.c.)	CF500	CF800		CF500	CF800	
	Tube KK	Tube KH	Tube KJ	Tube KK	Tube KH	Tube KJ
	No reserve air			10% Turndown		
0.0”	5.50	7.00	8.00	4.95	6.30	7.20
0.1”	4.75	6.25	7.50	4.27	5.62	6.75
0.2”	4.00	5.50	6.75	3.60	4.95	6.07
0.3”	3.50	4.50	6.25	3.15	4.00	5.62
0.4”	2.75	3.75	5.50	2.47	3.37	4.95
0.5”	2.00	3.00	5.00	1.80	2.70	4.50

Note: The above ratings may vary 5% due to variations in actual job conditions.

Figure 3a - Firebox Pressure: CF500 with no Reserve Air

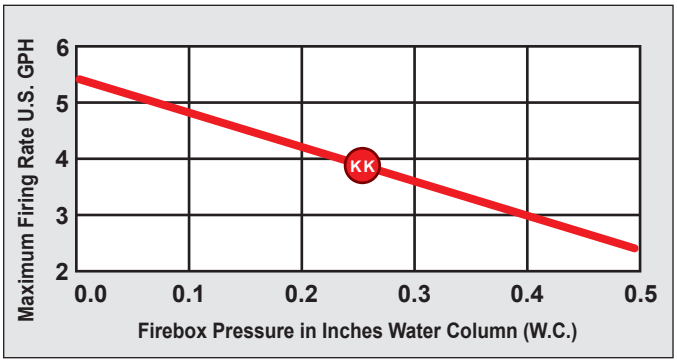

Figure 3b - Firebox Pressure: CF800 with no Reserve Air

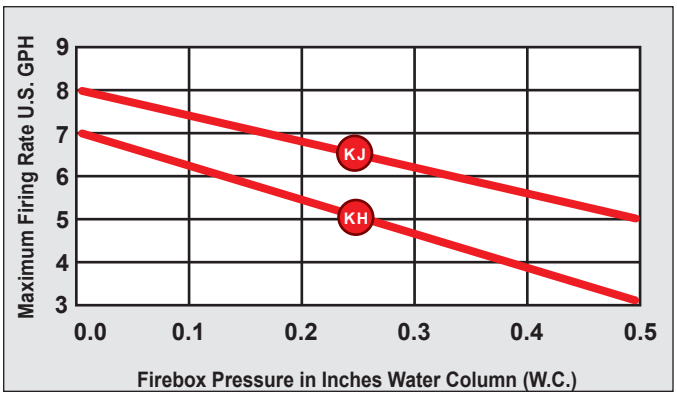

Stray Light

CAUTION **Protect Against Stray Light Lockout**

Failure to follow these instructions could cause loss of burner operation resulting in no heat, an unplanned process interruption, work stoppage and the potential for frozen plumbing or other cold weather property damage.

- The control must detect a dark, no-flame condition in order to start the burner or it will hold in the stray light lockout mode.
- Shield the burner from direct exposure to intense light.

Dust and Moisture

WARNING **Protect Against Dust and Moisture**

Wet, dusty environments could lead to blocked air passages, corrosion damage to components, impaired combustion performance and result in asphyxiation, explosion or fire.

- This burner is designed for clean, dry installations.
- Electrical controls are not protected against rain or sprayed water.
- Keep the installation clear of dust, dirt, corrosive vapors, and moisture.
- Protective covers and more frequent maintenance may be required.

Mount the Burner

CAUTION **Protect the Air Tube From Overheating**

Overheating could cause damage to the air tube and other combustion components leading to equipment malfunction and impaired combustion performance.

- The end of the air tube must not extend into the combustion chamber unprotected unless it has been factory-tested and specified by the appliance manufacturer.
- Position the end of the air tube ¼” back from flush with the refractory inside entry wall to prevent damage from overheating.

Mount flange(s) on air tube

This section does not apply to burners with welded flanges.

1. Do not install air tube on burner.
2. For *non-pressure firing flange*, refer to ***Figure 4***: Install gasket (item **a**) and flange (item **d**). Ignore the next paragraph.
3. For *pressure-firing flange*, refer to ***Figure 4***: Slide gasket (item **a**) onto the air tube, making sure the top of the air tube is up. Pre-drill holes in the pressure firing plate (item **b**) to match the appliance studs. Slide the pressure firing plate (item **b**) and flange (item **d**) onto the air tube as shown. Wrap ceramic fiber rope (item **c**) around the air tube and press tightly into the inside diameter of the flange (item **d**).
4. Slide the air tube (item **e**) into position in the appliance front. Tighten the flange-mounting-stud nuts. Set the insertion of the air tube so dimension **G** is 1/4" nominal.
5. Pitch the air tube at 2° from horizontal as shown and secure the flange to the air tube.

Figure 4 - Mount flange(s) on air tube

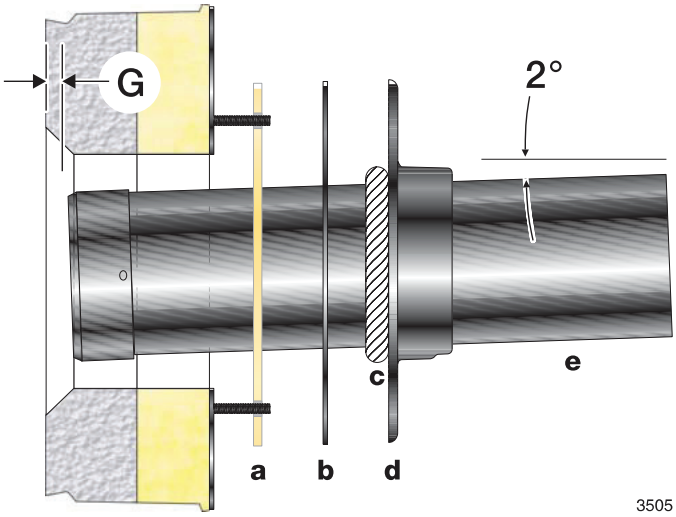

Mount air tube to burner

Insert the air tube into the burner housing. Carefully align the the four screw holes.
Attach the air tube to the burner using the four provided screws.

Install nozzle

Install the oil nozzle in the nozzle adapter. Use a **3/4"** open-end wrench to steady the nozzle adapter and a **5/8"** open-end wrench to turn the nozzle. Tighten securely but do not over-tighten.

Check electrode settings

WARNING **Maintain Electrode Specifications**

Failure to properly maintain these specifications could cause ignition malfunction, puff-back of hot gases, heavy smoke, asphyxiation, explosion and fire hazards.

Adjust the electrode gap and position in relation to the nozzle to the following specifications.

Check, and adjust if necessary, the critical dimensions shown in ***Figure 5***. Verify that the oil tube assembly and electrodes are in good condition, with no cracks or damage.

Figure 5 - Nozzle and nozzle line assembly

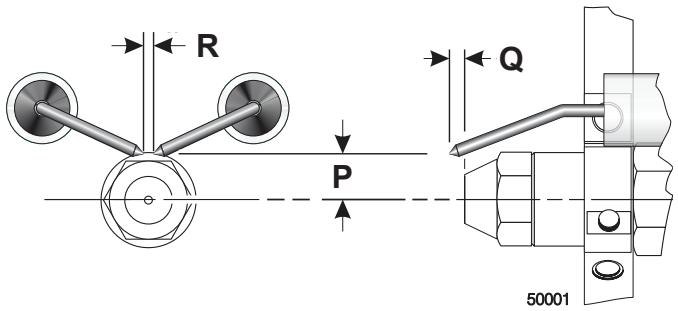

Legend (Figure 5)

P	Nozzle centerline to electrode tip = 3/16"
Q	Nozzle face to electrode tip = 1/4"
R	Electrode spacing = 3/16" gap

Install nozzle line assembly

Insert the nozzle line assembly into the burner air tube. Reference ***Figure 6***.
Slide the secondary adjusting plate (***Figure 7***, item **f**) completely to the left on the indicator adjusting plate (item **e**). Finger tighten acorn nut (item **c**) to secure the two plates together. Slide both plates completely to the right (Indicator Plate will read 0). Tighten fastener (item **d**). Install the spline nut on the end of the nozzle line, leaving the nut loosely placed so the plates can be moved.

Figure 6 - Nozzle line assembly in burner

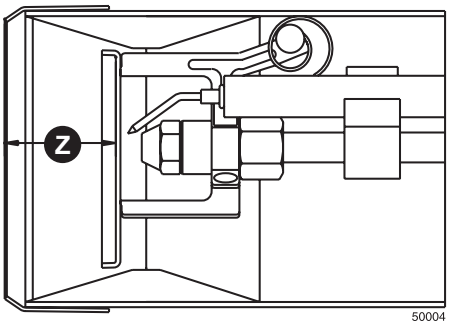

Z-Dimension
CF800 1-3/4”
CF500 1-9/16”
CF500/800 (with CF140KZ Air Tube) 1-1/2”

Figure 7 - Adjusting plate assy.

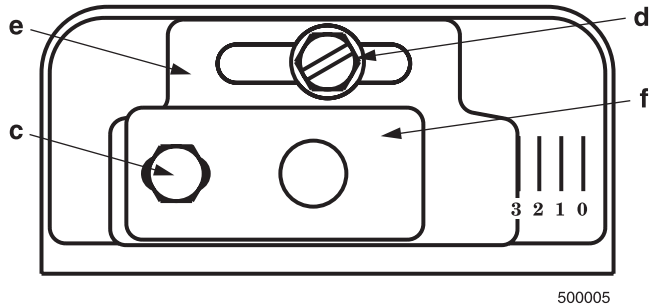

Legend (Figures 7)

c	Bottom acorn nut	e	Indicator adjusting plate
d	Fastener	f	Secondary adjusting plate

Set dimension Z

- Loosen fastener c in ***Figure 7.*** Slide the nozzle line and plate assembly until dimension **Z** in ***Figure 6*** is:

  CF500 - 1-9/16” ±1/16”
  CF800 - 1-3/4” ±1/16”
  CF500/800 *(with CF140KZ Air Tube)* - 1-1/2” ±1/16”

- When dimension Z (from end of air tube to flat area of front face of head) is correctly set, tighten acorn nut (item c).
- Attach the oil line from the oil valve to the nozzle line end. Tighten securely.
- Before proceeding, check dimension **Z** once again. Loosen acorn nut **c** if necessary to reposition the nozzle line. Once dimension **Z** is set, ***do not loosen the acorn nut (item)*** **c** ***again***. Note that for the setting of fastener **d**, refer to the initial head position procedure under *“Start-up Checklist”* section (Pg.18).

Insert burner

- Position the burner in the front of the appliance and loosely tighten the nuts on the mounting studs. The burner should be pitched downward 2° as shown in ***Figure 4***.
- Secure the burner to the appliance by tightening the nuts on the burner flange mounting studs.

Fuel unit by-pass plug

WARNING **Do Not Install By-pass Plug with 1-Pipe System**

Failure to comply could cause immediate pump seal failure, pressurized oil leakage and the potential for a fire and injury hazard.

- The burner is shipped without the by-pass plug installed.
- Intall the by-pass plug in two-pipe oil supply systems ONLY.

- The CF500 and CF800 burners are shipped without the by-pass plug installed in the fuel line.
- The by-pass plug must NOT be installed when using with a one-pipe oil system.
- The by-pass plug MUST be installed when using a two-pipe oil system.

Oil supply/return lines

WARNING **Install Oil Supply To Specifications**

Failure to properly install the oil supply system could cause oil leakage, equipment malfunction, puff-back of hot gases, heavy smoke, asphyxiation, explosion and fire hazards.

- Carefully install the oil supply lines, fittings and components using the guidelines provided in this section.
- The oil supply must comply with the latest edition of NFPA 31 (Canada CSA B139) and all applicable codes.
- Do NOT install valves in return lines.
- If the oil supply inlet pressure to the pump exceeds 3 psig or for gravity feed systems, install an oil safety or pressure reducing valve (Webster OSV, Suntec PRV or equivalent).

- Install the oil tank and oil lines in accordance with all applicable state and local codes.
- Size the oil supply and return lines using the guidelines given in the fuel unit literature included in the literature envelope. Oil line flow rate will equal the burner rate for one-pipe systems. For two-pipe systems, refer to ***Table 3*** for the fuel unit gear set capacity - the rate at which fuel is recirculated when connected to a two-pipe system. However, size two-pipe oil lines based on this flow rate.
- Use continuous lengths of heavy-wall copper tubing, routed under the floor where possible. Do not attach fuel lines to the appliance or to floor joists if possible. This will reduce vibration and noise transmission problems.
- Install an oil filter sized to handle the fuel unit

gearset flow capacity (***Table 3***) for ***two-pipe systems***. Size the filter for the firing rate for ***one-pipe systems***. Locate the filter immediately adjacent to the burner fuel unit.

- Install two high-quality shut-off valves in accessible locations on the oil supply line. Locate one valve close to the tank. Locate the other valve close to the burner, upstream of the fuel filter.

Table 3. Fuel Unit gearset capacity

Fuel unit model number	Gearset capacity (GPH)
A2VA-7116	17
A2YA-7916	20
B2VA-8216	21
B2YA-8916	25
B2TA-8248	21

Burner fuel flow

- **One-pipe systems** – See ***Figure 8*** for the fuel flow path.
  Figure 8 is based on type **B** fuel unit.
  Oil supply connects to one of the fuel unit inlet ports.
- **Two-pipe systems** – See ***Figure 9*** for the fuel flow paths for two-pipe oil systems.
  Figure 9 is based on type **B** fuel unit .
  Oil supply connects to one of the fuel unit inlet ports. Oil return connects to the fuel unit return port. ***(Install the by-pass plug in the fuel unit for two-pipe systems.)***

Figure 8 - One-pipe oil flow with "B" pump

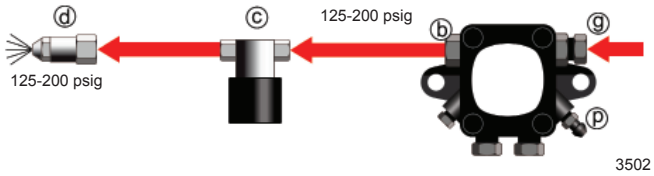

Figure 9 - Two-pipe oil flow with "B" pump

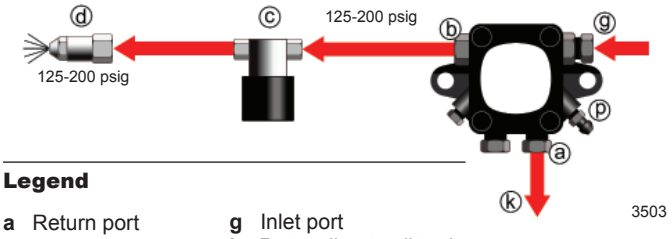

Legend

a Return port
b Nozzle port
c Oil valve
d Nozzle & adapter
g Inlet port
k Return line to oil tank
p Air bleed valve

Nozzle pressure – The fuel unit nozzle port pressure is factory set at 140 psig. Some original equipment manufacturer burner applications may call for a lower pressure to obtain a required firing rate. Do not change this pressure unless directed to do so by the appliance manufacturer.

Wire the Burner

WARNING **Electrical Shock Hazard**

Electrical shock can cause severe personal injury or death.

- Disconnect electrical power before installing or servicing the burner.
- Provide ground wiring to the burner, metal control enclosures and accessories. (This may also be required to aid proper control system operation)
- Perform all wiring in compliance with the National Electric Code ANSI/NFPA 70 (Canada CSA C22.1).

- Install the burner and all wiring in accordance with the National Electrical Code and all applicable local codes or requirements. In Canada, comply with the Canadian Electrical Code, Part 1.

- Wire the burner in compliance with all instructions provided by the appliance manufacturer. Verify operation of all controls in accordance with the appliance manufacturer's guidelines.

- See ***Figure 10*** for a typical wiring diagram with the 7505 oil primary, for reference purposes only. See ***Figure 12*** for a typical wiring diagram with the R7184 oil primary, for reference purposes only.

- The 7505 primary control with valve-on delay (pre-time) and burner motor-off delay (post time) requires a constant 120 volts AC power source supplied to the BLACK wire on the control. The RED wire goes to the appliance limit circuit. Please note that other control manufacturers may use different wire colors for power and limit connections.

CAUTION **Incorrect Wiring Will Result in Improper Control Operation**

- GeniSys wiring label colors may not match the wire colors of the burner or other manufacturers' controls.
- The GeniSys Control should be wired according to the appliance manufacturer's instructions.

Figure 10. – Typical Wiring (7505P)

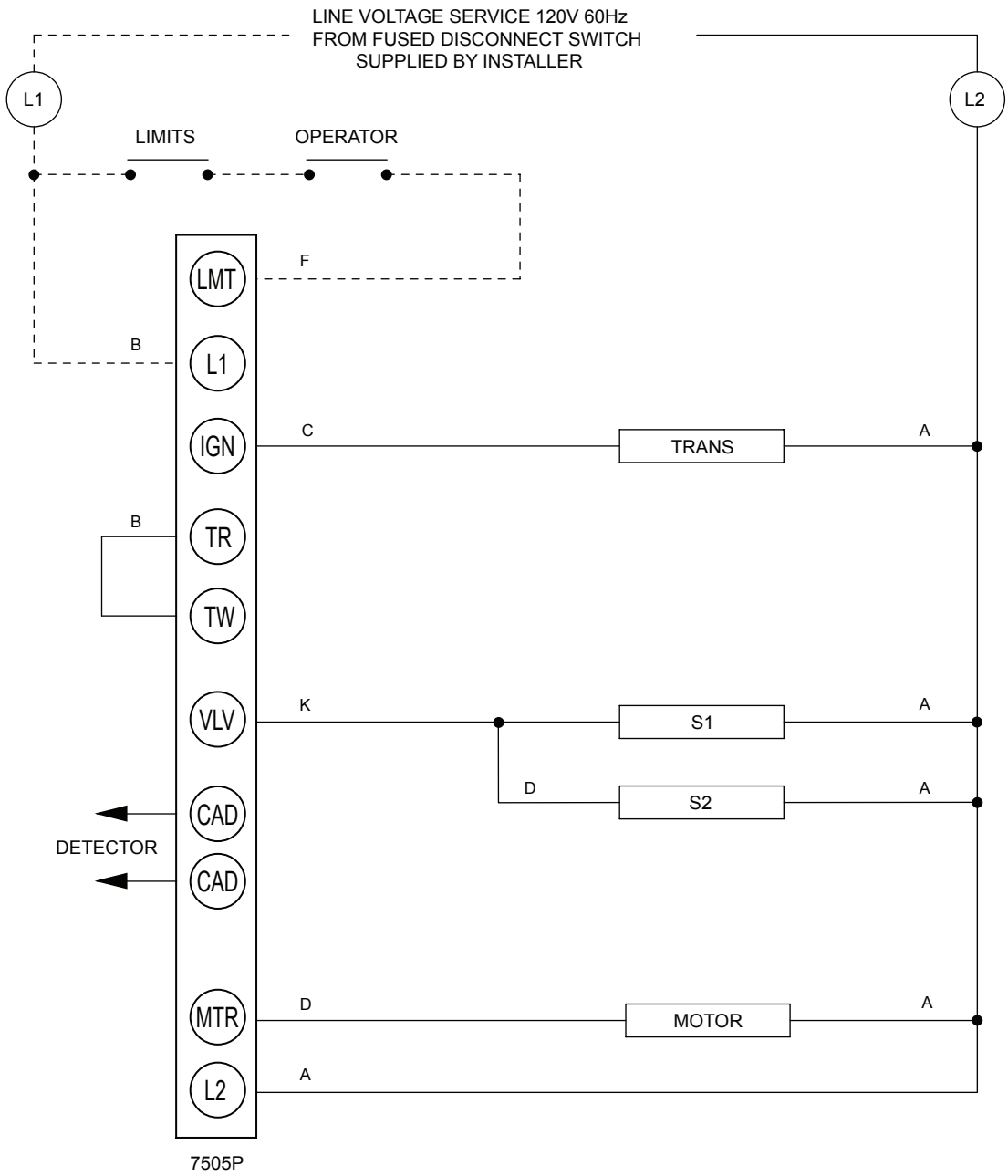

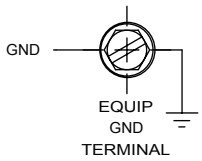

Legend

L1	Line 1 Power (Hot)
L2	Line 2 Power (Neutral)
LMT	Limit control Terminal
MTR	Motor Control Terminal
S1	Oil Valve
S2	Oil Valve (on Cleancut Pump)
TRANS	Ignition Transformer
VLV	Valve Control Terminal
———	Factory Wiring
- - - - - -	Wiring Supplied by Installer

WARNING **Explosion, Fire, Scald, and Burn Hazard**

All heating appliances must have HIGH LIMIT protection to interrupt electrical power and shutdown the burner if operating or safety controls fail and cause a runaway condition.

- Follow the appliance manufacturer's wiring diagrams and note all required safety controls.
- Typical safety controls include high temperature or pressure limits, low water cutoffs, pressure relief valves and blocked flue sensing switches.
- Verify all limit and safety controls are installed and functioning correctly, as specified by the manufacturer, applicable safety standards, codes and all authorities having jurisdiction.
- Ensure that the appliance is free of oil and oil vapor before starting or resetting the burner.

WARNING **Fire or Explosion Hazard**

Can cause severe injury, death, or property damage.

- The control can malfunction if it gets wet, leading to accumulation of oil or explosive oil vapors.
- Never install where water can flood, drip or condense on the control.
- Never use a control that has been wet - replace it.

Figure 11 - 7505 Control

Optional Components:

Contractor's Tool:
Hand-held device for programming and diagnostics

Display Module:
Permanent device for programming and diagnostics

Alarm Module:
For adding isolated low voltage alarm contacts to the base control. See Alarm Module Instructions for specifications.

Typical Burner Sequence of Operation - 7505 Control.

Refer to the appliance manufacturer's wiring diagram for actual specifications.

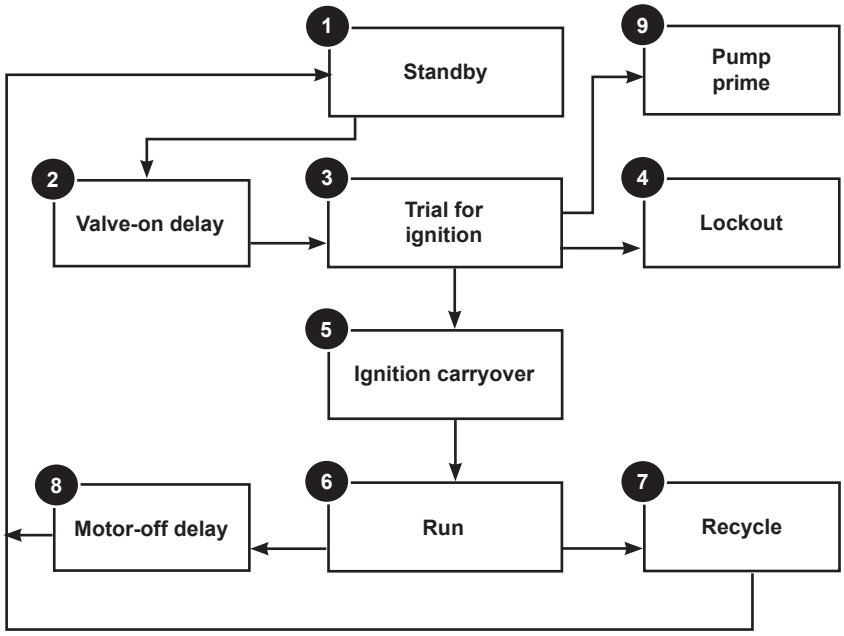

1. **Standby**: The burner is idle, waiting for a call for heat.
2. **Valve-On Delay**: The igniter and motor are on while the control delays turning on the oil solenoid valve for the programmed time.
3. **Trial For Ignition**: The oil solenoid valve is energized. A flame should be established within the factory set trial for ignition time (lockout time).
4. **Lockout**: The control has shut down for one of the following safety reasons:

   a. The trial for ignition (lockout) time expired without flame being established.

   b. The cad cell detected flame at the end of the Valve On Delay state.

   To reset the control from lockout click the button 1-second.

NOTE: A recurrence of the above failure modes or a failed welded relay check could cause the control to enter a **Hard Lockout** state that must be reset only by a qualified service technician.
To reset from Hard Lockout, hold the reset button for 15 seconds until the yellow light turns on.

5. **Ignition Carryover**: Once flame is established, the igniter remains on for 10 additional seconds to ensure flame stability.
6. **Run**: The flame is sustained until the call for heat is satisfied. The burner is then sent to Motor-Off Delay, if applicable, or it is shut down and sent to Standby.
7. **Recycle**: If the flame is lost while the burner is firing, the control shuts down the burner, enters a 60 second recycle delay, and repeats the ignition sequence. The control will continue to Recycle each time the flame is lost, until it reaches a pre-set time allotment. The control will then go into Hard Lockout instead of recycle. This feature prevents excessive accumulation of oil in the appliance firing chamber.
8. **Motor-Off Delay**: If applicable, the oil solenoid valve is turned off and the control delays turning the motor off for the set motor-off delay time before the control returns to standby.
9. **Pump Prime:** The igniter and motor are on with the oil solenoid valve energized for 4 minutes. During Pump Prime mode, the cad cell is disregarded, allowing the technician to prime the pump without having to jumper the cad cell.

Reset Button Operation

Table 4 explains what action the control will take when the reset button is pressed for different lengths of time during the various burner operating states.

Table 4 - Reset Button Operation

<table>
<tr><th rowspan="2">If the burner is in the below state:</th><th colspan="3">Pushing the reset button will:</th></tr>
<tr><th>Button Click
(press < 1 second)</th><th>Button Hold
(press > 1 second)</th><th>Button Hold
(press 15+ seconds)</th></tr>
<tr><td>Lockout</td><td colspan="2">Reset from Soft Lockout</td><td>Reset from Restricted (Hard) Lockout</td></tr>
<tr><td>Valve-on Delay, Trial for Ignition, Ignition Carryover</td><td>Go to Pump Prime (see “Priming the Pump” section in this manual.)</td><td rowspan="3">Disable the Burner: Any time the burner is running, press and hold the reset button to disable the burner. The burner will remain off as long as the button is held.</td><td rowspan="3">Enables Pump Priming: After the reset button has been held for 15 seconds, the button can then be clicked during the next ignition sequence to enter Pump Prime mode.</td></tr>
<tr><td>Run (igniter is shut off)</td><td>No action</td></tr>
<tr><td>Motor-Off Delay, Standby</td><td>No action</td></tr>
<tr><td>Pump Prime</td><td>No action</td><td colspan="2">Exit Pump Prime mode and return to Standby</td></tr>
</table>

Table 5 - Status Lights

Light Color	On Continuously	Flashing
Red	Restricted (Hard) Lockout	Soft Lockout
Green	Flame Sensed during normal operation (Could be stray light during standby)	Recycle
Yellow	Control is in Pump Prime mode or Reset button currently held for 15+ seconds.	N/A

Typical Burner Sequence of Operation - R7184P Control.

Refer to the appliance manufacturer's wiring diagram for actual specifications.

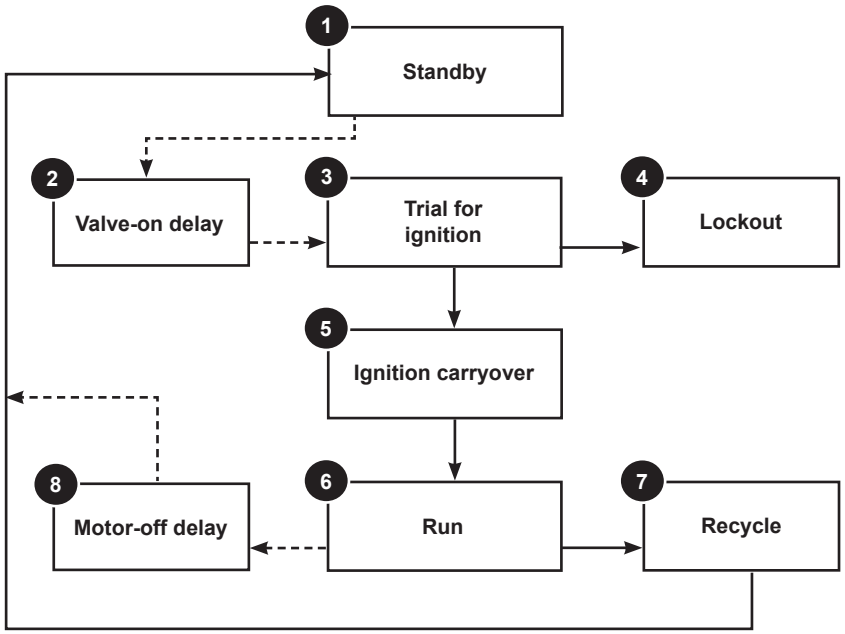

1. **STANDBY.** The burner is idle, waiting for a call for heat. When a call for heat is initiated, there is a 3-10 second delay while the control performs a safe start check.
2. **VALVE-ON DELAY.** The ignition and motor are turned on for a 15 second valve-on delay.
3. **TRIAL FOR IGNITION (TFI).** The fuel valve is opened. A flame should be established within the 15 second lockout time.
4. **LOCKOUT.** If flame is not sensed by the end of the TFI, the control shuts down on safety lockout and must be manually reset. If the control locks out three times in a row, the control enters restricted lockout.
5. **IGNITION CARRYOVER.** Once flame is established, the ignition remains on for 10 seconds to ensure flame stability before turning off. If the control is wired for intermittent duty ignition, the ignition unit stays on the entire time the motor is running.
6. **RUN.** The burner runs until the call for heat is satified. The burner is then sent to burner motor off delay, if applicable, or it is shut down and sent to standby.
7. **RECYCLE.** If the flame is lost while the burner is firing, the control shuts down the burner, enters a 60 second recycle delay, and then repeats the above ignition sequence. If flame is lost three times in a row, the control locks out to prevent cycling with repetitious flame loss due to poor combustion.
8. **BURNER MOTOR-OFF DELAY.** The fuel valve is closed and the burner motor is kept on for the selected motor-off delay time before the control returns the burner to standby.

Table 6 - Control System Features

Control Model	Features				
	Interrupted ignition	Limited reset, Limited recycle	Valve-on delay	Burner motor off delay	Alarm Contacts
R7505A	YES	YES	—	—	Optional
R7505B	YES	YES	YES	—	Optional
R7505P	YES	YES	YES	YES	Optional
R7184A	YES	YES	—	—	—
R7184B	YES	YES	YES	—	—
R7184P	YES	YES	YES	YES	Optional

Figure 12. - Typical wiring (R7184)

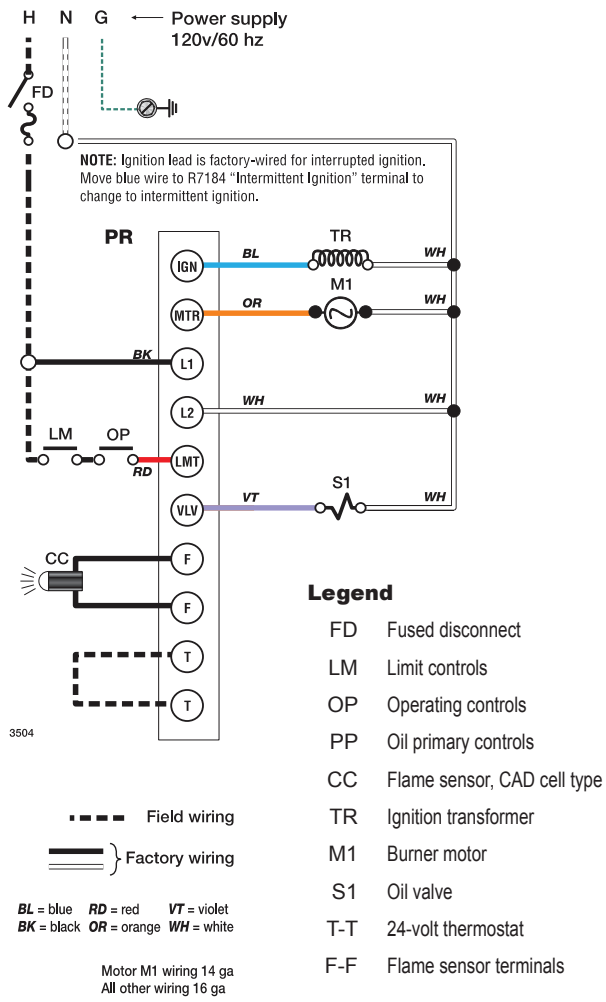

Note: Where a boiler management system cannot suppy motor power requirements an isolation relay should be used.

Prepare the Burner for Start-up

WARNING **Do Not Bypass Safety Controls**

Tampering with, or bypassing safety controls could lead to equipment malfunction and result in asphyxiation, explosion or fire.

- Safety controls are designed and installed to provide protection.
- Do not tamper with, or bypass any safety control.
- If a safety control is not functioning properly, shut off all main electrical power and fuel supply to the burner and call a qualified service agency immediately.

WARNING **Professional Installation and Service Required**

Incorrect installation and mishandling of start-up could lead to equipment malfunction and result in asphyxiation, explosion or fire.

- This burner must be installed and prepared for start-up by a qualified service technician who is trained and experienced in commercial oil burner system installation and operation.
- Do not attempt to start the burner unless you are fully qualified.
- Do not continue with this procedure until all items in the "Prepare the burner for start-up" section have been verified.
- Carefully follow the wiring diagrams, control instruction sheets, flame safeguard sequence of operation, test procedures and all appliance manufacturer's directions that pertain to this installation.
- If any of these items are not clear or are unavailable, call Beckett at 1-800-645-2876 for assistance.

CAUTION **Keep Service Access Covers Securely Installed**

These covers must be securely in place to prevent electrical shock, damage from external elements, and protect against injury from moving parts.

- All covers or service access plates must be in place at all times except during maintenance and service.
- This applies to all controls, panels, enclosures, switches, and guards or any component with a cover as part of its design.

Start-up checklist - Verify the following before attempting to start burner.

- ☐ Combustion air supply and venting have been inspected and verified to be free of obstructions and installed in accordance with all applicable codes.
- ☐ Oil nozzle has been selected correctly and securely installed in the nozzle adapter.
- ☐ Fuel unit by-pass plug ***has not*** been installed for one-pipe oil system.
- ☐ By-pass plug ***has been*** installed for two-pipe oil system.

- ☐ Fuel connection to nozzle line assembly is secure.
- ☐ Dimension Z has been set per the 'Set Z Dimension' instructions detailed earlier in this manual. The acorn nut (***Figure 7***, item **C**) should never be loosened once the Z dimension is initially set.
- ☐ Fuel supply line is correctly installed, the oil tank is sufficiently filled, and shut-off valves are open.
- ☐ Burner is securely mounted in appliance, with pressure firing plate and gasket installed for pressurized chamber application.
- ☐ Appliance has been filled with water (boilers) and controls have been operationally checked.
- ☐ Burner has been installed in accordance with appliance manufacturer's instructions (when available).
- ☐ Also refer to appliance manufacturer's instructions (when available) for start-up procedures.
- ☐ Initial head position (***Figure 7***)
  - ○ The indicator plate assembly markings correspond to head position settings.
  - ○ Loosen the fastener (***Figure 7***, item **d**) and slide the indicator plate until the number on the indicator plate corresponds to the initial head setting listed in ***Table 7,*** for the desired firing rate.
  - ○ When the head position has been set, tighten the fastener and the spline nut.

Table 7 - Initial indicator adjustment plate settings (head position)

Rate GPH	Approximate head settings		
	CF500	CF800	
		Tube A	Tube B
1.75	0	--	--
2.25	0		
3.00	4	0	--
3.50	5	1	--
4.00	5	2	--
5.00	6	4	3
5.50	6	4	4
6.00	--	4	4
7.00	--	6	5
8.00	--	--	6

Initial air settings (*Table 8*)

- ○ Loosen the air band and shutter, and adjust to the approximate firing rate settings given in ***Table 8.***
- ○ These initial settings should be adequate for starting the burner. Once the burner is in operation, the air settings will be adjusted for best performance as discussed later in this manual.
- ○ Follow the procedures described later in this manual for fine-tuning the air settings.

Table 8 - Initial air shutter and band settings

Rate GPH	Approximate air settings					
	CF500		CF800			
			Tube A		Tube B	
	Shutter	Band	Shutter	Band	Shutter	Band
1.75	1	0	--	--	--	--
2.25	2	0	--	--	--	--
3.00	10	1	1	0	--	--
3.50	10	2	3	0	--	--
4.00	10	3	4	0	--	--
5.00	10	5	9	0	8	2
5.50	10	10	9	5	9	4
6.00	--	--	10	3	10	3
7.00	--	--	10	8	10	5
8.00	--	--	--	--	10	10

Note: *These settings are appoximate, and can vary depending on actual job conditions and overfire pressure*

Set appliance limit controls

Set the appliance limit controls in accordance with the appliance manufacturer's recommendations.

Prepare the fuel unit for air venting

- ○ To vent air from the oil supply line, attach a clear hose to the pump air bleed valve (***Figures 8 & 9***) on the fuel unit. Provide a container to catch the oil. Loosen the pump air bleed valve.
- ○ Vent the air as described in the next section under ***Start the burner***.

Start the Burner

WARNING **Explosion and Fire Hazard**

Failure to follow these instructions could lead to equipment malfunction and result in heavy smoke emission, soot-up, hot gas puff-back, fire and asphyxiation hazards.

- Do not attempt to start the burner when excess oil has accumulated in the appliance, the appliance is full of vapor, or when the combustion chamber is very hot.
- Do not attempt to re-establish flame with the burner running if the flame becomes extinguished during start-up, venting, or adjustment.
- **Vapor-Filled Appliance:** Allow the unit to cool off and all vapors to dissipate before attempting another start.
- **Oil-Flooded Appliance:** Shut off the electrical power and the oil supply to the burner and then clear all accumulated oil before continuing.
- If the condition still appears unsafe, contact the Fire Department. Carefully follow their directions.
- Keep a fire extinguisher nearby and ready for use.

Starting the burner and venting air

Priming the pump

WARNING **Hot Gas Puff-back and Heavy Smoke Hazard**

Failure to bleed the pump properly could result in unstable combustion, hot gas puff-back and heavy smoke.

- Do not allow oil to intermittently spray into a hot combustion chamber while bleeding.
- Install a gauge in the nozzle discharge port tubing or fully open the pump bleed valve to prevent oil spray from accumulating in the combustion chamber when venting air from the fuel pump.
- Ensure that all bubbles and froth are purged from the oil supply system before tightening the pump air bleed valve.

- Priming the Pump For 7505 Control:

- Initiate a call for heat.
- After the burner starts, press and hold the reset button for 15 seconds until the yellow light turns on. This indicates that the button has been held long enough.
- Release the reset button. The yellow light will turn off and the burner will start up again.
- At burner start up, click the reset button while the igniter is still on. This will transition the control to a dedicated Pump Prime mode, during which the motor, igniter, and valve are powered for four minutes. The yellow light will be on.
- Bleed the pump until all froth and bubbles are purged. If desired, terminate the call for heat or hold the reset button for at least one second to exit Pump Prime mode and return to Standby.
- At the end of 4 minutes, the yellow light will turn off and the control will automatically return to standby mode.
- If prime is not established during the four minute pump prime mode, start the burner and click the reset button to re-enter Pump Prime mode. Repeat the priming procedure until the pump is fully primed and the oil is free of bubbles.
- Terminate the call for heat, and the control will resume normal operation.

- Priming the Pump For 7184 Control:

- Initiate a call for heat
- While the ignition is on, press and release the reset button on the control (hold 1/2 second or less). If the control has not locked out since it's most recent complete heat cycle, the lockout time will be extended to 4 minutes (45 seconds in earlier units), and the ignition will remain on the entire heat cycle.
- Bleed the pump until all froth and bubbles are purged. If prime is not established within the extended lockout time, the control will lock out. Press the reset button to reset the control and return to the functions listed in the previous step.
- Repeat the previous steps if needed, until the pump is fully primed and the oil is free of bubbles. Then terminate the call for heat, and the control will resume normal operation.

Disable function

Any time the motor is running, press and hold the reset button to disable the burner. The burner will remain off as long as the button is held and will return to standby when released.

Cad Cell Resistance Measurement

- If the Beckett 7505 control is equipped with the GeniSys Display Module, part 52067U, the cad cell resistance can be selected and read on the LCD screen. Also, the GeniSys Contractor Tool, part 52082U, can be used for this purpose.
- If these are not available, the cad cell leads can be unplugged from the control and the resistance measured with a meter in the conventional way. Conduct these tests with flame present.

Flame Detection Range
Normal = 0 to 1600 ohms
Limited = 1600 ohms to lockout

Resetting From Restricted or Hard Lockout

- If the control continues to lockout without a satisfied call for heat, or fails the motor relay check, the control enters Hard (restricted) Lockout in order to limit accumulation of unburned oil in the combustion chamber
- To reset 7505, hold the button down for 15 seconds until the red light turns off and the yellow light turns on.
- To reset R7184 control hold reset button down for 30 seconds until the LED flashes once for one second.

Set combustion using instruments

1. Allow the burner to run for approximately 5 to 10 minutes.
2. Set the stack or over-fire draft to the level specified by the appliance manufacturer.
   - **Natural Draft Applications;** typically over-fire draft is -0.01” or -0.02” w.c.
   - **Direct Venting**; typically may not require draft adjustment.
   - **High Efficiency/Positive Pressure Appliances**; also vary from traditional appliances (see manufacturer’s recommendations).
3. Follow these four steps to properly adjust the burner:

   Step 1: Adjust the air shutter/band until a trace of smoke is achieved.

   Step 2: At the trace of smoke level, measure the CO_2 (or O_2) . This is the vital reference point for further adjustments. Example: 13.5% CO_2 (2.6% O_2)

   Step 3: Increase the air to reduce the CO_2 by 1.5 to 2 percentage points. (O_2 will be increased by approximately 2.0 to 2.7 percentage points.) Example: Reduce CO_2 from 13.5% to 11.5% (2.6% to 5.3% O_2).

   Step 4: Recheck smoke level. It should be Zero.

   This procedure provides a margin of reserve air to accommodate variable conditions.

   If the draft level has changed, recheck the smoke and CO_2 (or O_2) levels and readjust the burner, if necessary
4. Once combustion is set, tighten all fasteners on air band, air shutter and escutcheon plate.
5. Start and stop the burner several times to ensure satisfactory operation. Test the primary control and all other appliance safety controls to verify that they function according to the manufacturer’s specifications.
6. Check the breech draft pressure against the appliance manufacturer’s recommended setting (typically + 0.1” W.C.). If the breech pressure is higher or lower than recommended level, adjust the appliance breech damper to achieve the specified setting. Recheck the smoke and CO_2 (or O_2) levels. Adjust burner air if necessary.

Maintenance and Service

WARNING **Annual Professional Service Required**

Tampering with or making incorrect adjustments could lead to equipment malfunction and result in asphyxiation, explosion or fire.

- DO NOT TAMPER WITH THE UNIT OR CONTROLS - CALL YOUR SERVICE PERSONNEL.
- To ensure continued reliable operation, a qualified service technician must service this burner annually.
- More frequent service intervals may be required in dusty or adverse environments.
- Operation and adjustment of the burner requires technical training and skillful use of combustion test instruments and other test equipment.

CAUTION **Always keep the fuel oil supply valve shut off if the burner(s) is shut down for an extended period of time.**

Annual Service — by qualified service technician

Have the burner inspected, tested and started at least annually by a qualified service technician. This annual test/inspection should include at least the following:

- ☐ Replace the oil supply line filter. The line filter cartridge must be replaced to avoid contamination of the fuel unit and nozzle.
- ☐ Inspect the oil supply system. All fittings should be leak-tight. The supply lines should be free of water, sludge and other restrictions.
- ☐ Remove and clean the pump strainer if applicable.
- ☐ Replace the nozzle with the exact brand, pattern, gph, flow rate and spray angle.
- ☐ Clean and inspect the electrodes for damage, replacing any that are cracked or chipped.
- ☐ Check electrode tip settings. Replace electrodes if tips are rounded.
- ☐ Inspect the igniter spring contacts.
- ☐ Clean the cad cell lens surface, if necessary.
- ☐ Inspect all gaskets. Replace any that are damaged or would fail to seal adequately.
- ☐ Inspect the combustion head and air tube. Remove any carbon or foreign matter. Replace all damaged units with exact parts.
- ☐ Clean the blower wheel, air inlet, air guide, burner housing and static plate of any lint or foreign material.
- ☐ If motor is not permanently lubricated, oil motor with a few drops of SAE 20 nondetergent oil at each oil hole. DO NOT over oil motor. Excessive oiling can cause motor failure.
- ☐ Check motor current. The amp draw should not exceed the nameplate rating.
- ☐ Check all wiring for secure connections or insulation breaks.
- ☐ Check the pump pressure and cutoff function.
- ☐ Check primary control safety lockout timing.
- ☐ Check ignition system for proper operation.
- ☐ Inspect the vent system and chimney for soot accumulation or other restriction.
- ☐ Clean all the passages and flue pipe. Replace corroded or damaged pipes.
- ☐ Clean the appliance thoroughly according to the manufacturer's recommendations.
- ☐ Check the burner performance. Refer to the section "Set combustion with test instruments".
- ☐ It is good practice to make a record of the service performed and the combustion test results.

Monthly Maintenance — by owner

- ☐ Observe combustion air openings and vent system for integrity. Openings must be clean and free of obstructions.
- ☐ Check oil lines and fittings to verify there are no leaks.
- ☐ Observe burner ignition and performance to verify smooth operation.
- ☐ Shut the system down if you observe abnormal or questionable operation. Call a qualified service agency for professional inspection and service.

Replacement parts

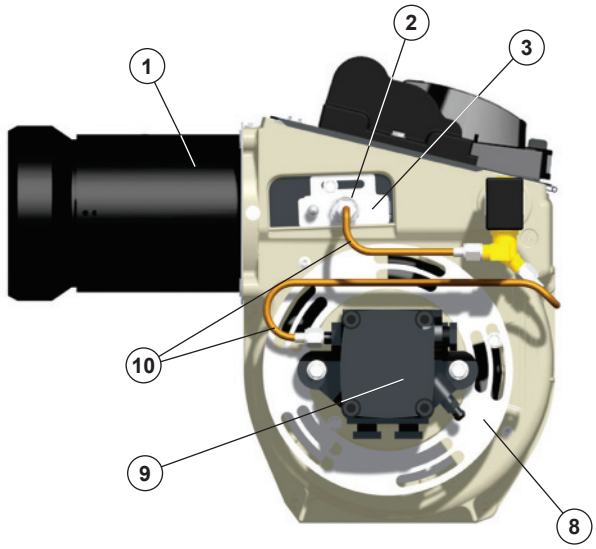

Figure 13 - Adjustable mounting plates for CF500 and CF800

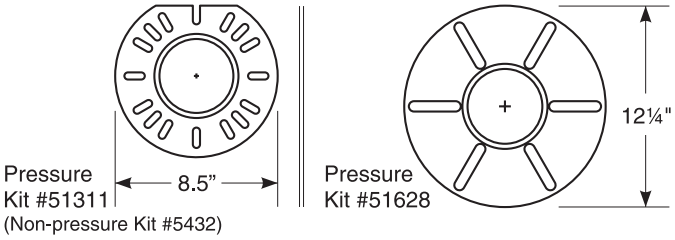

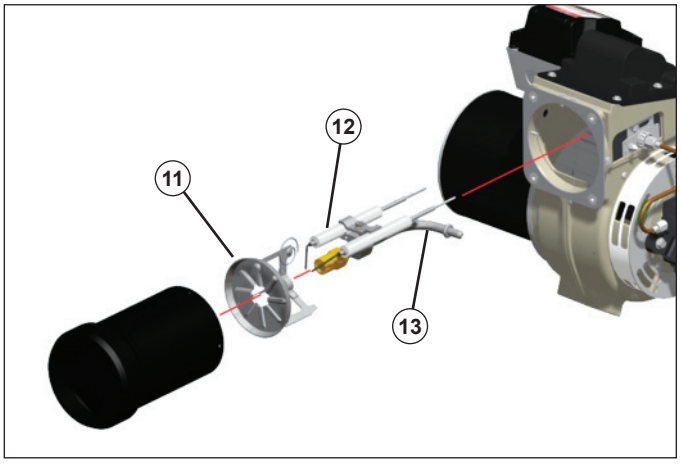

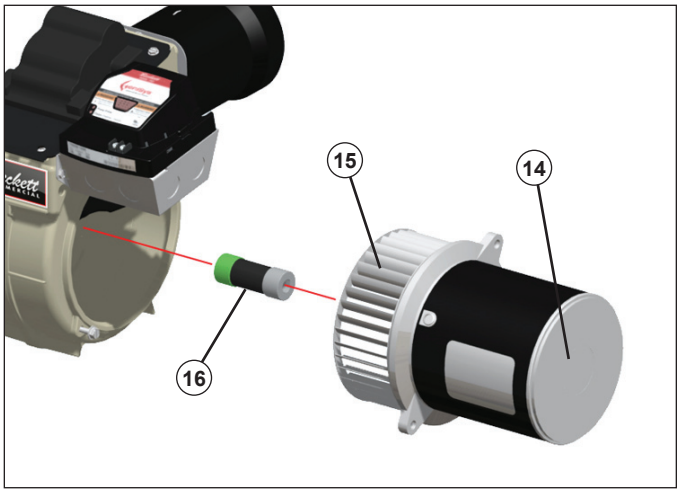

Parts List

Item	Part Name/Description	Part Number
1	Air Tube	Specify
2	Spline Nut	3666
3	Adjusting plate assembly	51286U
4	Blocking Oil Solenoid Valve	2182602U
5	Igniter	51824U
6	Control	Specify
7	Air Band	3819
8	Air Shutter	3215
9	Fuel Pump	Specify
10	Fuel lines	Specify Lengths
11	Head Assembly: CF500 - KK CF800 - KH (Tube A) CF800 - KJ (Tube B) CF500 & CF800 with CF140KZ air tube	 51401U 51252P 51302P 51820U
12	Electrode Assembly	Specify
13	Nozzle Line Assembly	Specify
14	Motor - 1/3 PSC	21341U
15	Blower Wheel: CF500 - 5-19/32” x 2-13/32” CF800 - 6-5/16” x 2-3/8”	 21448U 21339U
16	Coupling	2433
17	Flange Kit	See ***Figure 13***
18	Pedestal Kit	Not Shown

Limited Warranty Information

The R. W. BECKETT CORPORATION ("Beckett") warrants to persons who purchase its "Products" from Beckett for resale, or for incorporation into a product for resale ("Customers"), that its equipment is free from defects in material and workmanship. To qualify for warranty benefits, products must be installed by a qualified service agency in full compliance with all codes and authorities having jurisdiction, and used within the tolerances of Beckett's defined product specifications.

To review the complete warranty policy and duration of coverage for a specific product, or obtain a written copy of warranty form 61545, please choose one of the following options:

1. Visit our website at: www.beckettcorp.com/warranty
2. Email your request to: rwb-customer-service@beckettcorp.com
3. Write to: R. W. Beckett Corporation, P. O. Box 1289, Elyria, OH 44036

NOTE: Beckett is not responsible for any labor cost for removal and replacement of equipment.

THIS WARRANTY IS LIMITED TO THE PRECISE TERMS SET FORTH ABOVE, AND PROVIDES EXCLUSIVE REMEDIES EXPRESSLY IN LIEU OF ALL OTHER REMEDIES, AND IN PARTICULAR THERE SHALL BE EXCLUDED THE IMPLIED WARRANTIES OF MERCHANTABILITY AND FITNESS FOR A PARTICULAR PURPOSE. IN NO EVENT WILL BECKETT BE LIABLE FOR ANY INCIDENTAL OR CONSEQUENTIAL DAMAGE OF ANY NATURE. Beckett neither assumes, nor authorizes any person to assume for Beckett, any other liability or obligation in connection with the sale of this equipment. Beckett's liability and Customer's exclusive remedy is limited to the cost of the product.

Beckett™
CORPORATION

USA: P.O. Box 1289 • Elyria, Ohio 44036
Canada: R.W. Beckett Canada, Ltd. • Unit #3, 430 Laird Road • Guelph, Ontario N1G 3X7
www.beckettcorp.com

Part Number 6104 BCF5 R12, Printed in the U.S.A. 05/12