RTP ENVIRONMENTAL ASSOCIATES INC.®
AIR · WATER · SOLID WASTE CONSULTANTS
304-A West Millbrook Road
Raleigh, NC 27609
(rtpnc@rtpenv.com)
(919) 845-1422
Fax: (919) 845-1424

RECEIVED
JUN 03 2016
DEPARTMENT OF ENVIRONMENTAL QUALITY
STATE A C PROGRAM

June 1, 2016

Mr. Mike Simon
Stationary Source Program Manger
Idaho DEQ - Air Quality Division
1410 N. Hilton, Boise, ID 83706-1255

Subject: APPLICATION FOR PERMIT TO CONSTRUCT AGRIUM RASMUSSEN VALLEY MINE

Dear Mr. Simon:

Nu-West Mining, Inc., a wholly owned subsidiary of Nu-West Industries, Inc., doing business as Agrium Conda Phosphate Operations (Agrium CPO), is seeking authorization in the form of a Permit to Construct (PTC) to develop a new open pit phosphate mining operation that will include external overburden and ore piles, haul roads, mining pits, and other ancillary facilities. Phosphate ore excavated from the mine will be processed off site at Agrium's Conda Phosphate Operations Fertilizer Manufacturing Plant northeast of Soda Springs. The proposed mining operation is located on the southern end of Rasmussen Ridge in Caribou County approximately 18 miles northeast of Soda Springs, Idaho.

Per Agrium CPO's request, RTP Environmental is submitting in this package the application for a PTC the Agrium Rasmussen Valley Mine. One copy of the application and one flash drive containing the application are enclosed. Additionally, a check for the application fee of $1,000 and one copy of the application have been sent to:

Idaho Department of Environmental Quality
Attn: Fiscal Office - Air Quality Program
1410 N. Hilton
Boise, ID 83706

Should you have any questions or require additional information, please do not hesitate to call/email me at (919) 845-1422 x23/emmel@rtpenv.com or Chris Guedes at (208) 547-1890/chris.guedes@agrium.com.

Sincerely,

T E Emmel

Thomas Emmel
Senior Project Manager & Certified Cost Professional

cc: Chris Guedes
Mine Permitting Project Manger
Nu-West Industries dba Agrium
3010 Conda Road
Soda Springs, Idaho 83276

APPLICATION FOR PERMIT TO CONSTRUCT
AGRIUM RASMUSSEN VALLEY MINE
IN CARIBOU COUNTY IDAHO

Submitted to:
Idaho Department of Environmental Quality
Air Quality Program
1410 North Hilton
Boise, Idaho 83706

Prepared by:
RTP Environmental Associates
304A West Millbrook Road
Raleigh, North Carolina 27609

June 2016

Agrium
where the future is growing™

Table of Contents

1.0 INTRODUCTION 1-1

2.0 PROJECT DESCRIPTION AND SUMMARY OF EMISSIONS 2-1

2.1 Project Description 2-1
2.2 Emission Calculation Methodology 2-3
2.3 Summary of Air Emissions 2-9

3.0 ANALYSIS OF AIR QUALITY REGULATORY REQUIREMEnTS 3-1

3.1 Permit to Construct (IDAPA 58.01.01.201) 3-1
3.2 Tier I Operating Permit (IDAPA 58.01.01.300) 3-1
3.3 Visible Emissions (IDAPA 58.01.01.625) 3-1
3.4 Rules for Control of Fugitive Dust (IDAPA 58.01.01.650-651) 3-2
3.5 Rules for Sulfur Content of Fuels (IDAPA 58.01.01.725) 3-2
3.6 Rules for the Control of Nonmetallic Mineral Processing Plants (IDAPA 58.01.01.790, 793, 794) 3-2
3.7 NSPS Applicability (40 CFR 60 Subpart NN) 3-3
3.8 NSPS Applicability (40 CFR 60 Subpart OOO) 3-3
3.9 NSPS Applicability (40 CFR 60 Subpart IIII) 3-3
3.10 NESHAP Applicability (40 CFR 61) 3-3
3.11 NESHAP Applicability (40 CFR 63 Subpart ZZZZ) 3-3

4.0 AIR QUALITY DISPERSION MODELING 4-1

4.1 Site Description 4-2
4.2 Model Selection and Control Options 4-2
4.3 Source Data 4-4
4.4 Monitored Background Data 4-6
4.5 Ambient Air Boundary and Receptor Grid 4-6
4.6 Meteorological Data 4-10
4.7 Modeling Methodology 4-14
4.8 Model Results 4-20
4.9 Summary and Conclusions 4-24

APPENDICES

Appendix A - PTC Permit Application Forms
Appendix B - Anticipated Construction Schedule
Appendix C - Dust Control Plan
Appendix D - Emission Calculations (Provided on CD)
Appendix E - Diesel Generator Data Sheets & Information
Appendix F - EPA Non-Road Engine Emission Limits Applicable to RVM
Appendix G - Air Quality Dispersion Modeling (Modeling Files Provided on CD)

List of Tables

Table 1. Diesel Engines to be Operated at the Proposed RVM 2-9
Table 2. Summary of Emissions from the Proposed RVM 2-11
Table 3. RICE Installation Dates 3-4
Table 4. Receptor Grid Spacing 4-10
Table 5. Potential Criteria Pollutant Emissions and DEQ Modeling Thresholds 4-14
Table 6. Potential TAP Emissions and DEQ Modeling Thresholds 4-15
Table 7. National Ambient Air Quality Standards 4-16
Table 8. NAAQS Analysis Results 4-21
Table 9. Toxic Air Pollutant Analysis Results 4-24

List of Figures

Figure 1. General Location of the Agrium Rasmussen Valley Mine 1-2
Figure 2. Specific Location of the Agrium Rasmussen Valley Mine 2-2
Figure 3. Land Use within Three Kilometers (3km Radius Shown) 4-5
Figure 4. Agrium RVM Near-field Receptor Grid 4-12
Figure 5. Soda Springs 2004-2008 Wind Rose 4-13
Figure 6. Mining Phases for the Rasmussen Valley Mine 4-19
Figure 7. Receptors with Modeled Concentrations in Excess of 1-hr NO_2 NAAQS ... 4-22
Figure 8. Receptors with Modeled Concentrations in Excess of 24-hr PM_{10} NAAQS 4-23

1.0 INTRODUCTION

Nu-West Mining, Inc., a wholly owned subsidiary of Nu-West Industries, Inc., doing business as Agrium Conda Phosphate Operations (Agrium CPO), is seeking authorization in the form of a Permit to Construct (PTC) to develop a new open pit phosphate mining operation that will include external overburden and ore piles, haul roads, mining pits, and other ancillary facilities. Phosphate ore excavated from the mine will be processed off site at Agrium's Conda Phosphate Operations Fertilizer Manufacturing Plant northeast of Soda Springs. The proposed mining operation is located on the southern end of Rasmussen Ridge in Caribou County approximately 18 miles northeast of Soda Springs, Idaho. Figure 1 shows the general location of the Agrium CPO Rasmussen Valley Mine (RVM).

The mining operation would develop phosphate ore reserves contained within Federal Phosphate Lease IDI–05975 and associated Lease Modifications, Temporary Use Permits and Special Use Permits (Lease) in portions of Sections 4, 5, 6, 8, and 9, T7S, R44E; and Section 34, 35, and 36, T6S, R43E; and Section 1, T7S, R43E. The lease encompasses approximately 680 acres.

The federal mineral lease for the project is administered by the United States Bureau of Land Management (BLM). Surface ownership in the project area includes state-owned land (managed by the Idaho Department of Fish and Game [IDFG] and Idaho Department of Lands [IDL]), federally owned land (Bureau of Land Management (BLM) and United States Forest Service [USFS]), and private land. In accordance with the requirements of the National Environmental Policy Act and the Federal Land Policy and Management Act, the BLM and USFS are preparing an Environmental Impact Statement (EIS) for the proposed mine. Idaho Department of Environmental Quality (IDEQ) and United States Army Corps of Engineers are Cooperating Agencies for the EIS. IDL and IDFG are also participating in the review and development of the EIS.

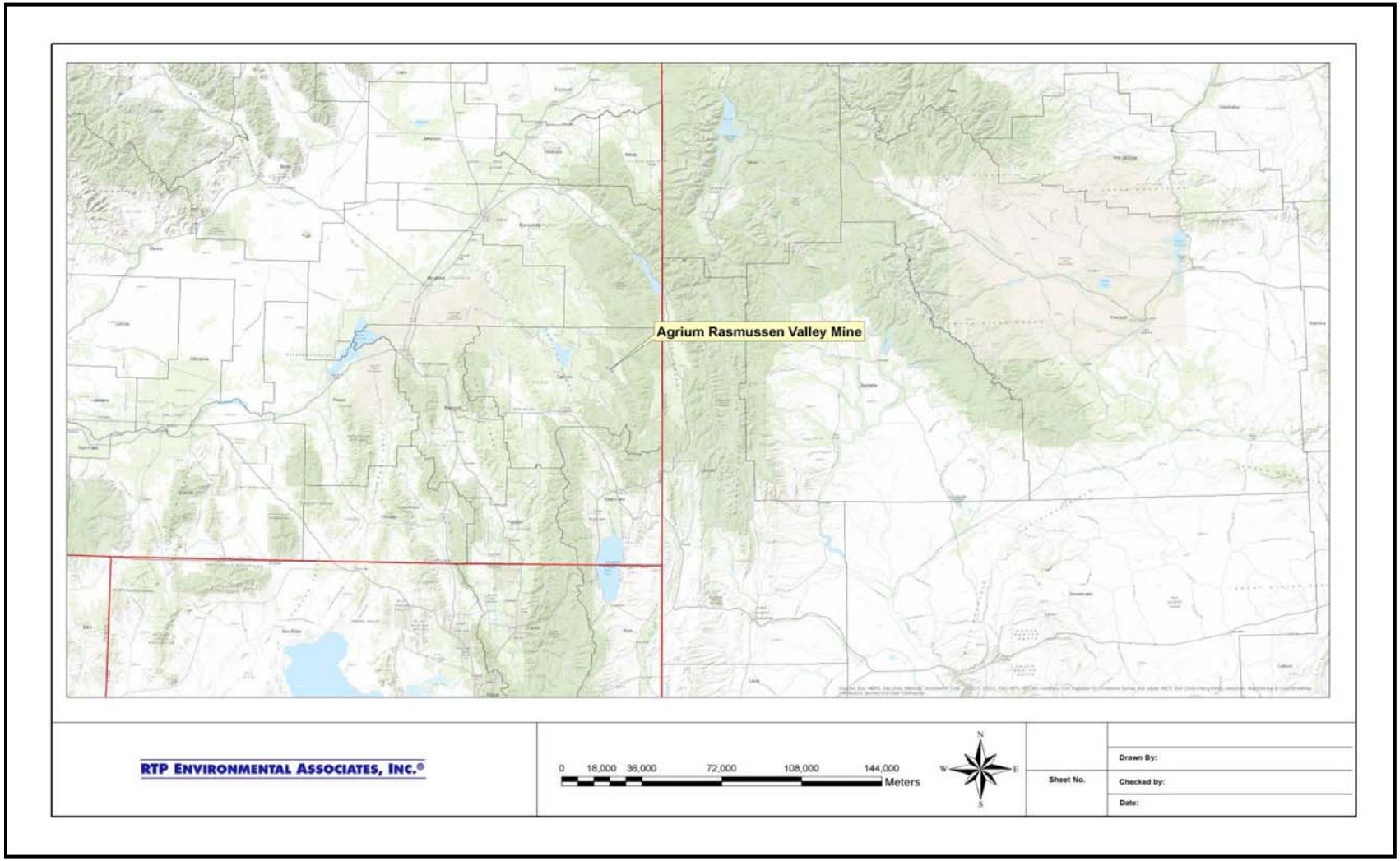

Figure 1. General Location of the Agrium CPO Rasmussen Valley Mine

BLM, USFS, USACE and IDEQ are collectively referred to as the Agencies for the purposes of this document.

This PTC application contains all of the required information pursuant to IDAPA 58.01.01.200 through 228, including completed application forms, application fee and Responsible Official certification. The remainder of this PTC application is organized as follows:

Section 2.0 – Project Description and Summary of Emissions
Section 3.0 – Analysis of Air Quality Regulatory Requirements
Section 4.0 – Air Quality Dispersion Modeling

Appendix A – PTC Permit Application Forms
Appendix B – Anticipated Construction Schedule
Appendix C – Dust Control Plan
Appendix D – Emission Calculations (Provided on CD)
Appendix E – Diesel Generator Data Sheets & Information
Appendix F – EPA Non-Road Engine Emission Limits Applicable to RVM
Appendix G –Air Quality Dispersion Modeling (Provided on CD)

2.0 PROJECT DESCRIPTION AND SUMMARY OF EMISSIONS

Agrium CPO proposes the RVM to construct, operate, and reclaim an open-pit phosphate mine in the Rasmussen Valley in Caribou County, Idaho. The RVM will incorporate an existing pit operated by Monsanto. The project proposes excavation of 3.0 million tons of phosphate ore per year, and 10.2 million tons of overburden. No phosphate ore crushing or smelting is included in the project, nor is any crushing or smelting under consideration. Mining of ore will be consistent with methods currently utilized at Agrium CPO's other open-pit phosphate mining operations in the region including extensive reclamation activities. Figure 2 presents the specific location of the RVM project.

2.1 Project Description

The RVM mining plan consists of:[1]

1. Development of a large open pit in a sequenced manner, consisting of nine phases, beginning at the northwest and generally progressing southeast. The life of proposed mining activities would be approximately 4.8 years, and the total project duration (including reclamation) would be 7.1 years.
2. Placement of overburden from the initial phases into Monsanto's partially backfilled and reclaimed South Rasmussen Mine (SRM) main pit (located directly north of the proposed mining activities), thus increasing the reclaimed area at the South Rasmussen Mine pit.
3. Development and reclamation of up to four growth media stockpile areas.
4. Backfilling the majority of the mined-out pit.
5. Construction and reclamation of a staging area.
6. Utilize electrical generators to power mine facilities.
7. Realignment of portions of Blackfoot River Road, Lanes Creek Road and Diamond Creek Road.
8. Construction and reclamation of sediment control structures.
9. Construction of two temporary overburden storage piles within the mine footprint.

[1] Rasmussen Alternative Collaborative mining plan from the Draft Environmental Impact Statement Rasmussen Valley Mine, September 2015.

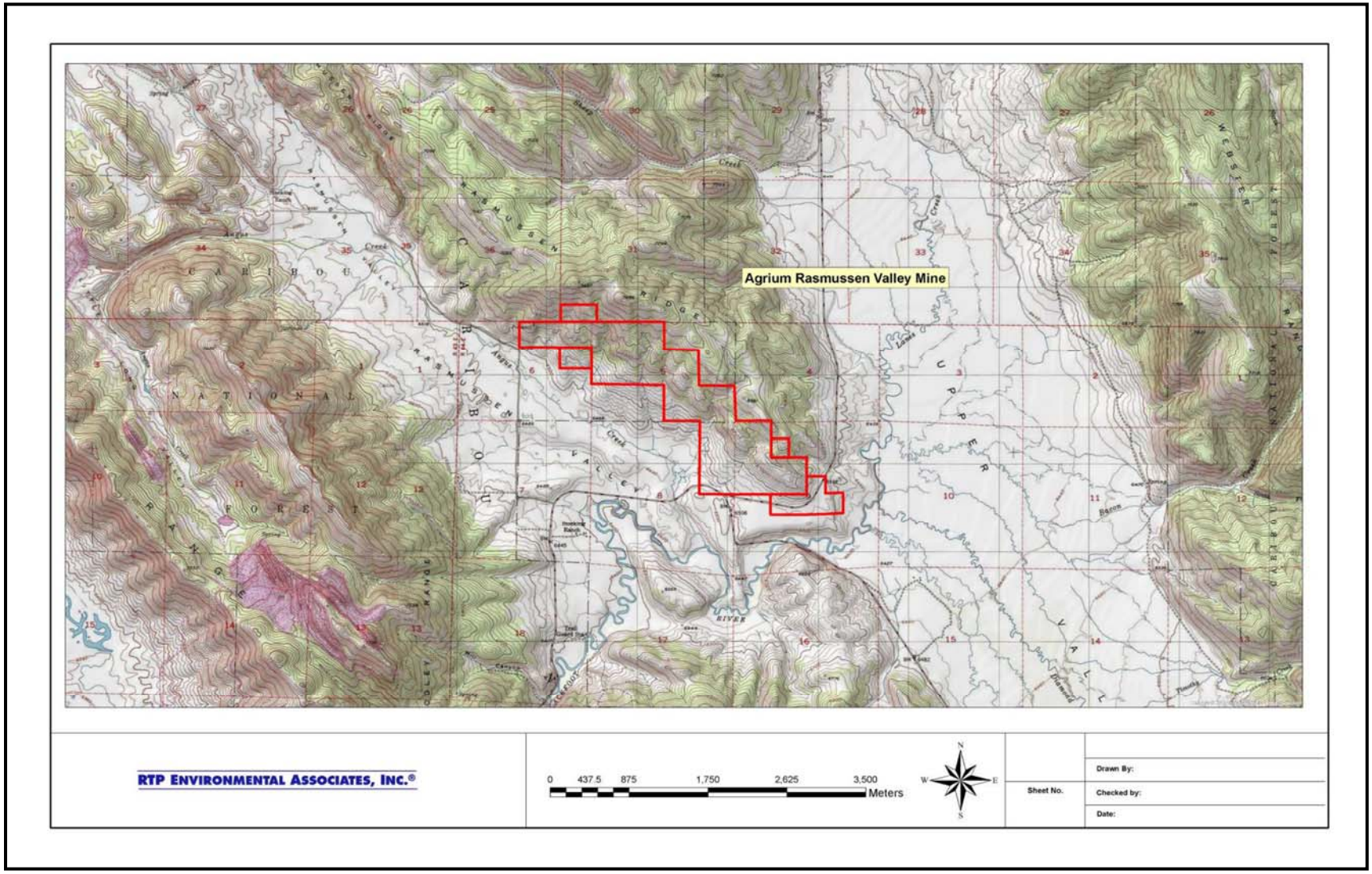

Figure 2. Specific Location of the Agrium CPO Rasmussen Valley Mine

10. Extension of the pit floor to the Lease boundary at the north end to maximize ore recovery.
11. Establishment of growth media and alluvium storage and borrow areas to be used to construct a backfill cap.
12. Reclamation with a diverse variety of plant species.

Agrium CPO's RVM ultimately will result in several benefits accruing to the existing property. A primary objective of the project is to minimize the risk of potential impacts to the environment from selenium and other COPCs, from both historical and newly-mined areas through the implementation of comprehensive reclamation. In part, this will be accomplished by backfilling 94 percent of the pit leaving no open pit and only small areas of pit wall exposed, limiting infiltration of water through the backfill by the installation of a robust cover, restoring regional drainage patterns, and increasing reclamation at the SRM.

Agrium CPO has implemented plans above and beyond the Proposed Action to ensure minimal environmental impacts which include the following:

- Elimination of permanent external overburden piles downslope of the mine and near already impacted surface water;
- Elimination of all temporary external Meade Peak overburden piles downslope of the mine and near already impacted surface water;
- No wetland impacts across the entire project;
- Use of previously disturbed ground and existing infrastructure to the maximum extent practicable;
- Reduced water crossings;
- Increased ridge-wide reclamation;
- Elimination of a proposed power line segment; and
- Increased public safety.

2.2 Emission Calculation Methodology

Major operations at the RVM include: (a) open-pit mining including drilling, blasting, loading; hauling ore and overburden material, stock piling of ore, growth media and overburden material; and (b) diesel burning engines generating electricity for the operation of the production trailer, stadium lights, water pumps, and portable lights to facilitate 24 hour per day operation. As previously mentioned, no phosphate ore crushing or smelting is included in the project.

Open Pit Mining

Mining of ore will be consistent with methods currently utilized at Agrium CPO's other open-pit phosphate mining operations in the region and will include large-scale equipment including rotary blast hole drills, off-highway haul trucks, off-highway water trucks, dozers and graders, fueling trucks and support vehicles. Peak mining rates are expected to reach up to 2 million tons per year.

Drilling, Blasting &Screening

Drilling, blasting, and screening are performed within the open-pit mine. These operations result in the fugitive emissions of PM (particulate matter), PM_{10}, and $PM_{2.5}$ with blasting also emitting carbon monoxide (CO), nitrogen oxides (NOx), and sulfur dioxide ($SO_{2)}$.

Drilling will be performed by a rotary blast-hole drill. Drilling emissions are estimated based on drilling eight holes per day, 365-days per year. Uncontrolled PM, PM_{10}, and $PM_{2.5}$ emissions from drilling are calculated using the emission factor of 1.3 pounds/hole for total suspended particulates (TSP) from drilling of overburden at western surface coal mines.[2] To be conservative, PM, PM_{10}, and $PM_{2.5}$ emissions were all considered equal to the TSP emission factor. A controlled factor for the use of wet suppression of 84 percent was used.[3]

---

2 AP-42 Table 11.9-4 (7/98).

3 Control efficiency based on the WRAP Fugitive Dust Handbook, September 2006. Table 3-7. Control Efficiencies for Control Measures for Construction/Demolition.

Blasting emissions are based on one blast per day, 365-days per year. Ammonium nitrate and fuel oil (ANFO) blasting agents will be used based on 2,128 pounds of ANFO per blast (388 tons per year of ANFO). Uncontrolled emissions of PM_{10} and $PM_{2.5}$ for blasting are calculated by using the predictive emission equation from AP-42 Table 11.9-1 (10/98) for blasting at western surface coal mines for TSP and multiplies the result by the scaling factor for PM_{10} and $PM_{2.5}$ to get emissions in pounds per blast. The scaling factors of 0.52 for PM_{10} and 0.03 for $PM_{2.5}$ are provided in AP-42 Table 11.9-1 (10/98). The TSP predictive emission equation for blasting is provided below.

$$EF = (k) \times (0.000014) \times (A)^{1.5}$$

Where:

EF = emission factor (lb. /blast)
k = scaling factor (TSP assumed to be equivalent to PM, 0.52 for PM_{10}, 0.03 for $PM_{2.5}$)
A = horizontal area of the blast (assumed spacing of 20 feet by 20 feet times 4 holes)

Uncontrolled gaseous (CO, NOx, and SO_2) emissions from blasting are calculated using the emission factors from AP-42 Table 13.3-1 (02/80) for the detonation of ANFO.

Screening will be performed during the summer months on approximately 30,000 tons of material (i.e. chert and limestone). Controlled PM, PM_{10}, and $PM_{2.5}$ emissions from screening are calculated using the AP-42 Table 11.19.2-2 pound per ton emission factors.

Hauling Ore and Overburden Material

The hourly and annual process rates for the amount of vehicle miles traveled (VMT) by the haul trucks in order to haul ore, overburden material and growth media to their respective storage areas are calculated by multiplying the distance traveled by the amount of truckloads needed to haul the material, which are anticipated to be consistent

throughout the life of the mine. Controlled PM_{10} and $PM_{2.5}$ emissions resulting from the use of haul trucks on unpaved haul roads at RVM are calculated from the emission factor in AP-42, Section 13.2.2 (11/06) a control efficiency factor multiplier.

$$EF = [k \times (s/12)^a \times (W/3)^b] \times [(365-P)/365] \times [\text{control efficiency factor}]$$

Where:

EF = size-specific emission factor (lb/VMT)
k = empirical constant (1.5 for PM_{10} and 0.15 for $PM_{2.5}$)
a = empirical constant (0.9 for PM_{10} and $PM_{2.5}$)
b = empirical constant (0.45 for PM_{10} and $PM_{2.5}$)
s = surface material silt content of 8.4 % from AP-42 Table 13.2.2-1(western surface coal mining haul road to/from pit)
W = mean weight of vehicles in tons (125 tons)[4]
P = number of days in a year with at least 0.254 mm (0.01 in) of precipitation = 90 from Figure 13.2.2-1

Control efficiency factor = 90% dust control for applying water[5]

Vehicle miles traveled for truck hauling from the pit to the overburden piles is 2.5 miles round trip with 90 trips per day. Vehicle miles traveled for truck hauling from the pit to the ore stockpile or lease boundary is 5 miles round trip with 30 trips per day.

Wind Erosion of Stockpiles

Uncontrolled PM_{10} and $PM_{2.5}$ emissions generated from the storage of ore, overburden material and growth media are calculated from the emission factor provided in AP-42 Table 11.9-4. From this table a wind erosion emission rate for exposed areas of 0.38 tons per acre-year was used. Because Table 11.9-4 does not include particle size

---

4 The average vehicle weight is based on a Cat 777 haul truck that has an empty weight of 70 tons and a loaded weight of 180 tons.

5 Haul roads and other areas requiring suppression of dust from mining operations will be sprayed with dust-suppression water from water wells. Applying water to unpaved roads can result in control efficiency of 75 to 95%. (WRAP Air Handbook, September 2006 Figure 6-1. Watering Control Effectiveness for Unpaved Travel Surfaces).

multipliers, scaling factors for particle size multiplies found in AP-42 Section 13.2.5 page 3 were use as follows:

- PM = 1.0
- PM_{10} = 0.5, and
- $PM_{2.5}$ = 0.075.

Although fugitive particulate emissions from the storage of ore, overburden material and growth media may be controlled by the addition of water on an as needed basis in order to inhibit the escape of particulate emissions, potential emissions are calculated assuming no controls.

Loading and Unloading Ore and Overburden

Uncontrolled PM_{10} and $PM_{2.5}$ emissions generated from the loading and unloading of ore, overburden material and growth media into haul trucks and stockpiles are calculated from the emission factor provided in AP-42 Section 13.2.4. The PM_{10} and $PM_{2.5}$ emission factor (pound/ton) is generated from using the particle size multiplier (dimensionless), mean wind speed and the material moisture content. The emission factor is then multiplied by the material throughput to yield the PM_{10} and $PM_{2.5}$ emissions. This equation is:

$$EF = \frac{k \cdot (0.0032) \cdot \left(\frac{U}{5}\right)^{1.3}}{\left(\frac{M}{2}\right)^{1.4}}$$

Where:

EF = emission factor (lb/ton)
k = aerodynamic particle size multiplier (dimensionless), (0.35 for PM_{10}, 0.053 for $PM_{2.5}$)
U = mean wind speed. (The mean wind speed at the RVM site is 7.9 mph, the average value calculated from hourly data collected at the Soda Springs airport meteorological station from 1/2011 through 12/2011)
M = material moisture content (overburden and growth media assigned 6.9 percent moisture content and phosphate ore assigned 12 percent moisture content)

Open Pit Mining TAP and HAP Metal Emissions

Toxic air pollutant (TAP) and hazardous air pollutant (HAP) metal emissions were estimated based on estimated concentrations of the metals in similar materials. Metals concentrations for the overburden and ore were based on measured values from a geochemical baseline study conducted for RVM,[6] which included the following metals: aluminum, antimony, arsenic, beryllium, cadmium, chromium, copper, iron, lead, magnesium, molybdenum, nickel, selenium, silver, uranium, and zinc. Samples of lithologic units were collected from exploratory boreholes at specified intervals along the strike of the deposit and submitted for laboratory analysis. Geometric mean values for metals were calculated for each lithologic unit, (e.g. alluvium, chert, limestone, upper ore, lower ore, ore associated waste, etc.). These geometric mean concentration values were weighted with respect to each lithologic unit using material balance data from RVM. The resultant weighted geometric mean values were utilized in the modeling, and reflect the metals concentrations in phosphate ore and overburden material that will undergo excavation, stockpiling and transport during operations at RVM. Metal analyses were not conducted for cobalt, mercury, tungsten, and zirconium. The expected concentrations for cobalt, mercury, and zirconium were taken from Lithogeochemistry of the Meade Peak Phosphatic Shale Member of the Phosphoria Formation.[7] The expected concentration of tungsten was taken from Chemical Analyses for Selected Minor Elements in Pierre Shale.[8] Tungsten samples analyzed in a similar lithologic unit (Pierre Shale) indicated less than 1 parts per million by weight (ppmw) tungsten; 1 ppmw was used in the modeling analysis.

---

[6] Whetstone Associates, Inc., 2012, Final Baseline Geochemical Characterization Study Plan, Rasmussen Valley Mine Project, U.S. Department of Interior, Bureau of Land Management, Idaho Falls District, Pocatello Field Office (preliminary geochemical data summary).

[7] Herring, J.R., and R.I. Grauch. 2004. Lithogeochemistry of the Meade Peak Phosphatic Shale Member of the Phosphoria Formation, Southeast Idaho. pp. 321-366 in Life Cycle of the Phosphoria Formation: From Deposition to Post-Mining Environment, ed. J. R. Hein, Vol. 8 of Handbook of Exploration and Environmental Geochemistry, ed. M. Hall Elsevier B.V., Amsterdam.

[8] Rader, L.F., and Grimaldi, F.S., 1961, Chemical Analyses for Selected Minor Elements in Pierre Shale, Geological Survey Professional Paper 391-A, U.S. Govt. Printing Office, Washington, 1961, 51 pp.

Diesel Burning Engines

The RVM will operate twelve diesel engines as shown in Table 1.

Table 1. Diesel Engines to be Operated at the Proposed RVM

Description	Model Number	Diesel Engine Hp	Status
Dust Suppression Well	DCA85USJ	113	Existing – Tier 3
Dust Suppression Well	DCA45SSIU4F	65.7	New – Tier 4
Ready Line	DCA70SSJU4i	107	New – Tier 4 interim
Light Plants (9)	WLTC	13.6	New – Tier 4

The daily and annual emission rates for the diesel-burning generators are based on the nominal horse power (Hp) ratings of the generators and the hours of operation. All generator emissions were calculated for continuous operation at 8,760 hours/year. Manufacturer's data sheets for the generators are provided in Appendix E.

Controlled emission rates for CO, non-methane hydrocarbons (assumed to be VOC), NOx, and PM are calculated using EPA Tier III and IV emission factors for non-road engines as provided in Appendix F. Emissions of SO_2 are based on diesel fuel sulfur content of 15 parts per million by weight (ppmw). Emissions of greenhouse gases are based on emission factors from Table 1 for Stationary Combustion Emission Factors from the EPA Emission Factors for Greenhouse Gas Inventories and Table 9 for Global Warming Potentials (GWPs) for conversion of gasses to CO_2 equivalent from the EPA Emission Factors for Greenhouse Gas Inventories. Emissions of HAP and TAP emissions resulting from the burning of diesel fuel are calculated using emission factors from AP-42 Table 3.3-2 (10/96) for uncontrolled diesel engines less than or equal to 600 horsepower.

2.3 Summary of Air Emissions

The RVM operation will subject the overburden and ore to drilling and blasting to enable mine excavation. Excavation is conducted using a fleet of diesel/hydraulic excavators

and diesel haul trucks. Other diesel engine equipment used at the site include electric generators to provide power for the production trailer, stadium lights, water pumps, and light generators to facilitate 24 hour per day operation. Air emissions will occur from the diesel engine equipment, fugitive emissions from mining activities (drilling, blasting, and screening), and fugitive emissions from materials hauling, handling and storage. Table 2 presents a summary of air emissions from the RVM project. Both point source emissions and fugitive emissions are presented. Emissions of HAPs and TAPs are less than one ton per year. Appendix D presents the details of the emission calculations.

Agrium
where the future is growing™

Table 2. Summary of Emissions from the Proposed RVM

iteria Pollutant Potential to Emit Emissions Summary, Rasmussen Valley Mine Proposed Action																
Emission Source	PM_{10}		$PM_{2.5}$		SO_2		NO_X		CO		VOC		CO_2e		HAPs & TAPs	
	lb/hr	tons/yr	lb/hr	tons/yr	lb/hr	tons/yr	lb/hr	tons/yr	lb/hr	tons/yr	lb/hr	tons/yr	lb/hr	tons/yr	lb/hr	tons/yr
Stationary Fuel Combustion Sources																
Diesel Light Plant 1	0.016	0.071	0.016	0.071	0.000	0.001	0.3	1.3	0.27	1.2	0.06	0.27	28	124	6.70E-04	2.93E-03
Diesel Light Plant 2	0.016	0.071	0.016	0.071	0.000	0.001	0.3	1.3	0.27	1.2	0.06	0.27	28	124	6.70E-04	2.93E-03
Diesel Light Plant 3	0.016	0.071	0.016	0.071	0.000	0.001	0.3	1.3	0.27	1.2	0.06	0.27	28	124	6.70E-04	2.93E-03
Diesel Light Plant 4	0.016	0.071	0.016	0.071	0.000	0.001	0.3	1.3	0.27	1.2	0.06	0.27	28	124	6.70E-04	2.93E-03
Diesel Light Plant 5	0.016	0.071	0.016	0.071	0.000	0.001	0.3	1.3	0.27	1.2	0.06	0.27	28	124	6.70E-04	2.93E-03
Diesel Light Plant 6	0.016	0.071	0.016	0.071	0.000	0.001	0.3	1.3	0.27	1.2	0.06	0.27	28	124	6.70E-04	2.93E-03
Diesel Light Plant 7	0.016	0.071	0.016	0.071	0.000	0.001	0.3	1.3	0.27	1.2	0.06	0.27	28	124	6.70E-04	2.93E-03
Diesel Light Plant 8	0.016	0.071	0.016	0.071	0.000	0.001	0.3	1.3	0.27	1.2	0.06	0.27	28	124	6.70E-04	2.93E-03
Diesel Light Plant 9	0.016	0.071	0.016	0.071	0.000	0.001	0.3	1.3	0.27	1.2	0.06	0.27	28	124	6.70E-04	2.93E-03
Existing Dust Suppression Well	0.056	0.244	0.056	0.244	0.001	0.005	0.7	3.2	0.9	4.1	0.28	1.24	129	567	3.06E-03	1.34E-02
New Dust Suppression Well	0.003	0.014	0.003	0.014	0.001	0.003	0.5	2.2	0.5	2.4	0.17	0.72	75	330	1.78E-03	7.80E-03
Ready Line	0.004	0.015	0.004	0.015	0.001	0.005	0.1	0.3	0.9	3.8	0.03	0.15	123	537	2.90E-03	1.27E-02
Point Source Subtotals	**0.21**	**0.9**	**0.21**	**0.9**	**0.01**	**0.0**	**4.05**	**17.8**	**4.75**	**20.8**	**1.04**	**4.6**	**582**	**2,548**	**0.01**	**0.06**
Mining Fugitives																
Drilling	0.069	0.304	0.069	0.304	--	--	--	--	--	--	--	--	--	--	1.72E-03	7.52E-03
Blasting & Explosives	0.019	0.085	0.001	0.005	0.089	0.39	0.75	3.3	3.0	13.0	--	--	--	--	4.81E-04	2.11E-03
Screening	0.010	0.011	0.001	0.001	--	--	--	--	--	--	--	--	--	--	4.75E-05	2.08E-04
Haul Road - Pit to Overburden Pile	4.1	18.0	0.4	1.8											7.19E-02	3.15E-01
Haul Road - Pit to Ore Stockpile/Lease Boundry	4.1	18.0	0.4	1.8											7.19E-02	3.15E-01
Ore Loading at Pit	0.0202	0.089	0.0031	0.0134											3.79E-04	1.66E-03
Ore Unloading at Pile	0.0202	0.089	0.0031	0.0134											3.79E-04	1.66E-03
Ore Loading at Pile	0.0202	0.089	0.0031	0.0134											3.79E-04	1.66E-03
Overburden Loading at Pit	0.0746	0.327	0.0113	0.0494											1.30E-03	5.70E-03
Overburden Unloading at Pile	0.0746	0.327	0.0113	0.0494											1.30E-03	5.70E-03
Overburden Loading at Pile	0.0609	0.267	0.0092	0.0404											1.06E-03	4.66E-03
Overburdent Unloading Pit Refill	0.0609	0.267	0.0092	0.0404											1.06E-03	4.66E-03
Wind Erosion - GM and OB Piles	0.0021	0.009	0.0003	0.0014											3.72E-05	1.63E-04
Wind Erosion - Ore Stock Piles	0.0002	0.0008	0.0000	0.0001											3.46E-06	1.51E-05
Fugitive Source Subtotals	**8.7**	**37.9**	**0.9**	**4.1**	**0.1**	**0.4**	**0.8**	**3.3**	**3.0**	**13.0**	**0.0**	**0.0**	**0.0**	**0.0**	**0.15**	**0.67**
Project Totals	**9**	**39**	**1**	**5**	**0**	**0**	**5**	**21**	**8**	**34**	**1**	**5**	**582**	**2,548**	**0.17**	**0.73**

Notes:

Emissions are based on 8760 hours/year, except for screening which is based on operating three months per year (2190 hours/year).

3.0 ANALYSIS OF AIR QUALITY REGULATORY REQUIREMENTS

The RVM project is located in Caribou County, which is designated as attainment or unclassified for $PM_{2.5}$, PM_{10}, SO_2, NO_2, CO and Ozone (VOC and NOx). The RVM project is a minor source of air pollution under the regulations governing Prevention of Significant Deterioration (40 CFR 52.21) and Title V (40 CFR 70.2). This is because the uncontrolled potential-to-emit (PTE) of regulated pollutants from all stationary emissions units, based on rated capacity and 8,760 hours per year operation, are below major source thresholds.

3.1 Permit to Construct (IDAPA 58.01.01.201)

No owner or operator may commence construction or modification of any stationary source, facility, major facility, or major modification without first obtaining a permit to construct from the Department which satisfies the requirements of IDAPA 58.01.01.200 – 228. The proposed RVM project constitutes construction as that term is defined for purposes of PTC applicability. Therefore, a PTC is required in accordance with IDAPA 58.01.01.201.

3.2 Tier I Operating Permit (IDAPA 58.01.01.300)

The post project emissions from the proposed facility do not have a PTE greater than 100 tons per year for $PM_{2.5}$, PM_{10}, SO_2, NO_2, CO and VOC, 10 tons per year for anyone HAP, or 25 tons per year for all HAP combined. Therefore the facility is not a Tier I source in accordance with IDAPA 58.01.01.006, and the requirements of IDAPA 58.01.01.301 do not apply.

3.3 Visible Emissions (IDAPA 58.01.01.625)

The sources of PM emissions at the facility are subject to the visible emissions standard of 20% opacity. Agrium CPO will comply with this rule by implementing good operating practices and inspecting emissions units regularly.

3.4 Rules for Control of Fugitive Dust (IDAPA 58.01.01.650-651)

This rule requires that all reasonable precautions must be taken to prevent particulate matter from becoming airborne. The sources of fugitive dust at the facility are subject to the requirements of this rule, and Agrium CPO will comply with this rule through the use and execution of a fugitive dust control plan.

3.5 Rules for Sulfur Content of Fuels (IDAPA 58.01.01.725)

This rule prohibits selling, distributing and using any distillate fuel oil containing more than the following percentages of sulfur:

a. ASTM Grade 1. ASTM Grade 1 fuel oil - zero point three percent (0.3%) by weight.

b. ASTM Grade 2. ASTM Grade 2 fuel oil - zero point five percent (0.5%) by weight.

This rule applies to the diesel generators at the facility, and Agrium CPO will comply by using ultra-low sulfur diesel (< 0.0015% sulfur by weight).

3.6 Rules for the Control of Nonmetallic Mineral Processing Plants (IDAPA 58.01.01.790, 793, 794)

Rules 790 and 794 apply to any combination of equipment that is used to crush or grind any nonmetallic mineral or rock wherever it may be located. The emission prohibitions of these rules do not apply to the proposed facility because the facility will have no crushing or grinding operations. However, Rule 793 applies to owners and operators of nonmetallic mineral processing plants that are not subject to Rule 790. As such, Agrium will not discharge from the screening operation atmospheric emissions which exhibit greater than twenty percent (20%) opacity.

3.7 NSPS Applicability (40 CFR 60 Subpart NN)

Although RVM meets the definition of a Phosphate Rock Plant under NSPS Subpart NN, because of the mining and screening processes, the facility does not utilize any of the affected facilities covered by this Subpart and to which standards apply (rock dryer, rock calciner, rock grinder, and ground rock handling and storage). As such this NSPS is not applicable to the RVM facility.

3.8 NSPS Applicability (40 CFR 60 Subpart OOO)

The provisions of this subpart are applicable to the following affected facilities in fixed or portable nonmetallic mineral processing plants: each crusher, grinding mill, screening operation, bucket elevator, belt conveyor, bagging operation, storage bin, enclosed truck or railcar loading station. The provisions of this subpart do not apply to plants without crushers or grinding mills [§60.670(a)(2)]. As such this NSPS is not applicable to the RVM because the facility will not have crushers or grinding mills.

3.9 NSPS Applicability (40 CFR 60 Subpart IIII)

The provisions of this subpart are applicable to manufacturers, owners, and operators of stationary compression ignition (CI) internal combustion engines (ICE). This NSPS is applicable to all of the stationary diesel engines at the RVM facility, and the facility will comply with the emission standards, monitoring, recordkeeping, and reporting requirements of Subpart IIII.

3.10 NESHAP Applicability (40 CFR 61)

None of the subparts under the National Emission Standards of Hazardous Air Pollutants (NESHAP) 40 CFR Part 61 are applicable to the RVM facility.

3.11 NESHAP Applicability (40 CFR 63 Subpart ZZZZ)

This subpart applies to stationary reciprocating internal combustion engines (RICE) located at major and area sources of HAPs. The RVM facility will be an area source of HAPs. RICEs constructed on or after June 12, 2006 are considered new stationary RICE and will meet the requirements of 40 CFR 60 Subpart IIII as required by this subpart. RICEs constructed before June 12, 2006 are considered existing stationary RICE and will meet the requirements of this subpart. All of the RVM RICE are considered new stationary RICE. The installation year for the RVM RICE are shown in Table 3.

Table 3. RICE Installation Dates

Generator Units	Installation Year
Existing Well Pump (113 Hp)	2012
Nine Light Plants (24.7 Hp each)	2017
New Well Pump (65.7 Hp)	2017
Ready Line Generator (107 Hp)	2017

4.0 AIR QUALITY DISPERSION MODELING

An air quality modeling analysis was conducted to evaluate compliance with the National Ambient Air Quality Standards (NAAQS) and the Toxic Air Pollutant (TAP) increments of Idaho Air Rules found in the Idaho Administrative Procedures Act (IDAPA) Sections 585 and 586. The Idaho Department of Environmental Quality (IDEQ) has determined that this demonstration generally requires the applicant to perform air quality impact analyses using dispersion models.

The analysis evaluated emissions of the criteria pollutants with total facility potential emissions that exceed the Level I or Level II thresholds as listed in Table 2 of the Idaho Guideline for Performing Air Quality Impact Analysis.[9] For TAPs, only those pollutants with total facility emissions in excess of the Screening Emissions Levels (EL) in IDAPA Sections 585 and 586 were evaluated. TAPs from the diesel engines were not included as these sources are subject to a National Emissions Standard for Hazardous Air Pollution (NESHAP) and exempt from TAP review pursuant to IDAPA §210(20). Only the TAPs associated with the fugitive dust from the mine haul roads, storage piles, and truck loading/unloading were included.

The modeling analysis conformed with the modeling procedures outlined in the U.S. Environmental Protection Agency's (EPA) Guideline on Air Quality Models(Guideline), [10] the Idaho Guideline for Performing Air Quality Impact Analysis, and associated EPA

[9] State of Idaho Guideline for Performing Air Quality Impact Analyses, Department of Environmental Quality, September 2013.

[10] Guidelines on Air Quality Models, (Revised). Appendix W of 40 CFR Part 51, U.S. Environmental Protection Agency, Office of Air Quality Planning and Standards, Research Triangle Park, North Carolina. November 9, 2005.

modeling policy and guidance. The analysis also conforms with the modeling protocol submitted to and approved by the IDEQ.[11]

4.1 Site Description

The Agrium CPO RVM mining operation will be located on the southern end of Rasmussen Ridge and in adjacent portions of Rasmussen Valley in Caribou County approximately 18 miles northeast of Soda Springs, Idaho. The approximate Universal Transverse Mercator (UTM) coordinates of the facility are 472,500 meters east and 4,743,000 meters north (UTM Zone 12, NAD 83). Figure 2 shows the specific location of the lease boundary on a 7.5-minute U.S. Geological Survey (USGS) topographic map. The majority of the mine is at elevations between 1980-2130m (6500-7000ft) above mean sea level.

4.2 Model Selection and Control Options

Model Selection

The latest version of the AMS/EPA Regulatory Model (AERMOD, Version 15181) was used to conduct the dispersion modeling analysis. AERMOD is a Gaussian plume dispersion model that is based on planetary boundary layer principals for characterizing atmospheric stability. The model evaluates the non-Gaussian vertical behavior of plumes during convective conditions with the probability density function and the superposition of several Gaussian plumes. AERMOD is a modeling system with three components: AERMAP is the terrain preprocessor program, AERMET is the meteorological data preprocessor and AERMOD includes the dispersion modeling algorithms.

[11] Air Dispersion Modeling Protocol for the Agrium CPO Rasmussen Valley Mine in Caribou County Idaho, RTP Environmental Associates, December 2015, and the subsequent IDEQ Approval letter, January 12, 2016.

AERMOD is the most appropriate model for calculating ambient concentrations near the mine based on the model's ability to incorporate multiple sources and source types. The model can also account for convective updrafts and downdrafts and meteorological data throughout the plume depth. The model also provides parameters required for use with up to date planetary boundary layer parameterization. The model also has the ability to incorporate building wake effects and to calculate concentrations within the cavity recirculation zone. All model options will be selected as recommended in the EPA Guideline on Air Quality Models.

Oris Solution's BEEST Graphical User Interface (GUI) was used to run AERMOD. The GUI uses an altered version of the AERMOD code to allow for flexibility in the file naming convention. The dispersion algorithms of AERMOD are not altered. Therefore, there is no need for a model equivalency evaluation pursuant to Section 3.2 of 40 CFR 51, Appendix W.

Model Control Options and Land Use

AERMOD was run in the regulatory default mode for all pollutants using the default rural dispersion coefficients in the model. Use of rural dispersion coefficients is supported by the Land Use Procedure consistent with subsection 7.2.3(c) of the Guideline and Section 5.1 of the AERMOD Implementation Guide.

The USGS 2006 National Land Cover Data (NLCD) within 3km of the site were converted to Auer 1978 land use types and evaluated. [12] It was determined that the land use in the vicinity of the facility is predominantly rural (Figure 3). There is no area (red and dark red in the figure) classified as urban by Auer. The potential for urban heat

[12] Auer, Jr., A.H. "Correlation of Land Use and Cover with Meteorological Anomalies." Journal of Applied Meteorology, 17:636 643, 1978.

island affects, which are regional in character, was considered and determined not to be of concern.

4.3 Source Data

Source Characterization

Point Sources

Only the electrical generators and light plants will vent to stacks with a well defined opening. These sources were modeled as point sources in AERMOD.

Fugitive Emissions

The majority of operations at the site will be fugitive in nature and will not vent to a well defined opening. The fugitive emissions were modeled as volume sources. The initial dispersion coefficients (sigma y and sigma z) were calculated based upon the dimensions of the area of release and the equations contained in Table 3-1 of the AERMOD User's Guide.

The haul roads were modeled as adjacent volume sources pursuant to procedures adopted by the EPA Haul Road Workgroup: [13]

- Top of plume height: 1.7 × the vehicle height
- Volume source release height: 0.5 x top of plume height
- Width of plume: road width + 6m (for two lane road)
- Sigma Z: top of plume ÷ 2.15
- Sigma Y: width of plume ÷ 2.15

All model input data are presented in Appendix G.

[13] Haul Road Workgroup Final Report, EPA Region 5, March 2, 2012.

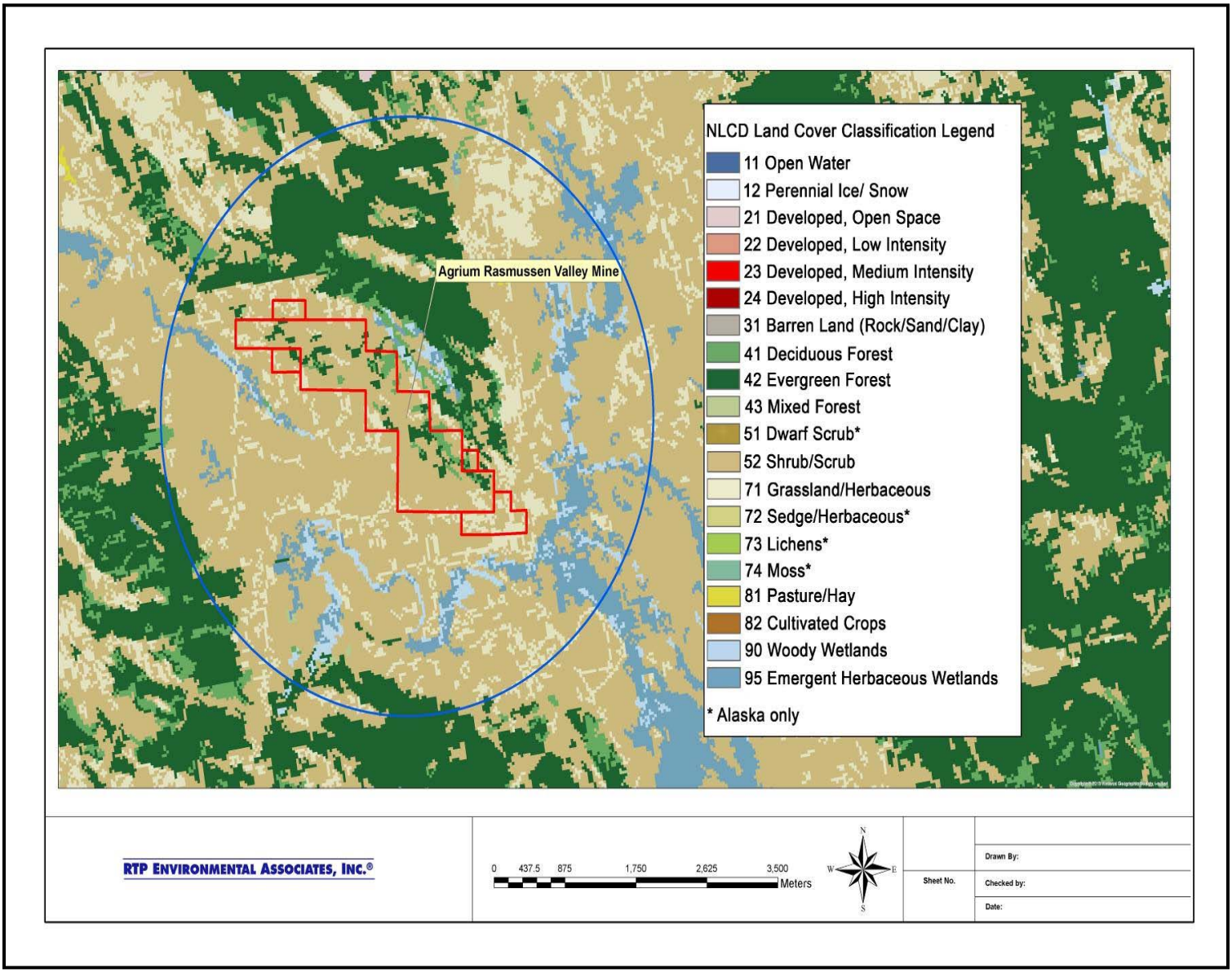

Figure 3. Land Use within Three Kilometers (3km Radius Shown)

Good Engineering Practice Stack Height Analysis

A Good Engineering Practice (GEP) stack height evaluation was not conducted because there are no building or other structures proposed to be constructed that would create aerodynamic downwash.

4.4 Monitored Background Data

Ambient, background pollutant concentrations are needed to establish a representative background concentration to complete the NAAQS portion of the *Source Impact Analysis* of 40 CFR 52.21(k). The background concentrations are added to the modeled concentrations to assess NAAQS compliance. The DEQ provided appropriate background PM_{10}, $PM_{2.5}$, and NO_2 values for this analysis.

4.5 Ambient Air Boundary and Receptor Grid

Modeled receptors were placed in all areas considered as "ambient air" pursuant to 40 CFR 50.1(e) as implemented at Section 006 of the Idaho Air Rules. Ambient air is defined as that portion of the atmosphere, external to buildings, to which the general public has access. The EPA has further stated that “the exemption from ambient air is available only for the atmosphere over land owned or controlled by the source and to which public access is precluded by a fence or other physical barriers”.

Based upon these definitions, DEQ developed case-by-case guidance in its modeling protocol that sets forth criteria for justification of an ambient air boundary. Agrium CPO applied the criteria to assess “Facility Control” and determined that an ambient air boundary can be established satisfactorily at the mine lease boundary. A similar approach was used to establish the ambient air boundary for the Agrium CPO North Rasmussen Ridge modeling demonstration, as well as for Monsanto’s P4 South Rasmussen Mine PTC of 2011.

Facility Control Criteria

DEQ's modeling guidance asks a series of questions to justify a proposed ambient air boundary. First, '*is general public access precluded by a physical barrier (e.g., a fence with a gate)?*' No, the general public will not be precluded by a manmade physical barrier. Located approximately 18 miles northeast of Soda Springs in Caribou County, the RVM is situated in the southeast end of Rasmussen Ridge and in adjacent portions of Rasmussen Valley. The local topography of the RVM is characterized by a series of north to northwest trending mountain ranges separated by broad intermountain valleys. The proposed ambient air boundary for this minor source follows the ridgeline to the north and the open valley to the south. The proposed boundary encompasses the farthest extent of the mine lease boundary. Constructing and maintaining a fence in this rugged and remote area is impractical and unreasonable.

In addition, the terms and conditions of Agrium CPO's federal leases do not grant the company the right to construct a fence. Agrium CPO has the exclusive right to the minerals, but not to the surface lands. The mining lease for RVM gives Agrium CPO the right to explore and develop phosphate minerals. Surface use by Agrium CPO is limited to uses 'necessary and convenient' to the development of the mineral interests. Agrium CPO must make all reasonable efforts to avoid interference with other authorized uses (43 CFR §3501.16). Therefore, installing a fence may exceed Agrium CPO's limited surface rights under its federal mining lease. While DEQ's guidance suggests a preference for fencing the ambient air boundary, additional questions confirm that other methods to preclude access are acceptable. Agrium CPO provides the following information to justify other means of establishing an ambient air boundary.

Under DEQ's guidance, when fencing is not reasonable, a source like RVM is presented with additional questions ("1b Questions"). First, '*is general public access discouraged by the type of area…size of facility…or a remote location away from the proximity of human habitation or activities*?' Yes, general public access is strongly discouraged by the type of area, size of facility, and remoteness. The RVM site is a relatively large site

in a remote location away from human habitation and activities. There are very few sensitive receptors in the area. The closest populated area is the small, unincorporated Town of Wayan, which is located approximately 7.6 miles north. The closest seasonal residence is 0.5 mile to the south, while a group of nine residences is located between 1.17 and 1.3 miles northeast of the site. The general public is not part of normal business operations in the area, nor are they invited as part of the normal business conducted at the site. Active mining operations will occupy most of the lease area. In light of the type of area, type of operational activity, and size of the facility, Agrium CPO has the responsibility to restrict public access to ensure public safety under the Mine Safety and Health Administration Act (MSHA). Therefore, discouraging public access at the lease boundary is essential to protect the public and to conduct operational activities. The US Forest Service also requires that Agrium CPO effectively control public access near any areas of activity for public safety reasons.

Next DEQ's 1b Questions ask: '*is the facility controlled by reasonable posting of the property with 'no trespassing' signs or reasonable patrol of the property by a security person who routinely asks trespassers to leave?*' Yes, the facility is controlled by these activities. First, the entire length of the lease line will be posted with clearly visible signs to deter access, and the boundary will be monitored by Agrium CPO personnel to discourage the public from accessing the site. Signs will also be posted at known access points. Gates will be installed at mine entry roads. With Angus Creek located along the western boundary of the site, signs will also be posted on the western boundary of the site along the creek. Blackfoot River is located immediately south of the southern boundary and therefore signage will also be posted at the site along the southern boundary.

The RVM facility will have staff (Agrium and contract personnel) in areas of operation and should generally have a line of sight to observe the surrounding boundary area. All staff will have the right and the duty to discourage unauthorized access to the site, and to request any member of the public to leave the area immediately. If RVM personnel

identify that someone has entered the RVM boundary, the mine supervisor is contacted by phone/radio and all mining operations will be stopped. Any unauthorized personnel will be promptly escorted off the premises. In addition, the general public will not be allowed to access the property through any right-of-way easement or common service road. Instead, Agrium CPO intends to re-route the existing public road, Lanes Creek Road, which transects the southern portion of the Agrium CPO lease. This road will be re-routed to run through the southeastern end of the property covered by the lease, effectively removing it from the area of mining activities. There are no other easements or common roads running through the subject site.

Under DEQ's guidance, if Agrium CPO answers "yes" to both of the 1b Questions presented above, then the facility is assumed to be controlled, with public access effectively precluded. Under DEQ's guidance, the ambient air boundary can satisfactorily be determined to be at the mine lease boundary.

Specific Facility Control Actions

In summary and to support the 1b Questions used to justify the proposed ambient air boundary, Agrium CPO will:

1. Install gates at access points and fencing where it may be practical.
2. Where fences or gates are not practical, and only natural barriers exist:
    a. Identify the area within the ambient air boundary as part of a safety exclusion zone, and ensure a consistent approach to identifying and removing members of the public.
    b. Post visible signs to discourage access along the mine lease boundary so that a sign is reasonably visible upon approach to the boundary.
    c. Maintain a written public access control plan to locate, identify and intercept persons crossing the ambient air boundary and entering the safety exclusion zone. Include as part of this plan routine inspections of the signs (at least semi-annually) with written documentation of the inspections.

Receptor Locations

The receptor grid consists of three cartesian grids and receptors spaced at 25m intervals along the lease line and along Lanes Creek Road. The first cartesian grid extended to approximately 150m from the boundary in all directions. Receptors in this region were spaced at 25m intervals. The second grid extended to 2.5km. Receptor spacing in this region was 100m. The third grid will extend to 5km with a spacing of 250m. The receptor grid was designed such that maximum facility impacts fall within the 25 or 100m spacing of receptors. The grid spacing is presented in Table 4.

Table 4. Receptor Grid Spacing

Receptor Spacing (m)	Distance from Facility Lease Line (m)
25	150
100	2,500
250	5,000

There is mountainous terrain near the facility. Receptor elevations and hill height scale factors were calculated with AERMAP (11103). The elevation data was derived from the USGS 1 arc second National Elevation Data (NED) obtained from the USGS. Locations were based upon a NAD83, UTM Zone 12 projection. The near-field receptor grid is presented in Figure 4. The model boundary is shown as the blue line. The lease boundary is shown as the red line.

4.6 Meteorological Data

Meteorological data from Soda Springs was used in the analysis. These data are reasonably representative of the Agrium CPO Rasmussen Valley Mine site conditions. This dataset was used in the modeling recently conducted for both the Agrium CPO North Rasmussen Ridge and Lanes Creek mine sites. The Soda Springs meteorological monitoring site is located approximately 27km south west of the Agrium CPO RVM site. A 5-year dataset (2004-2008) was provided by the DEQ for use. The data consists of the Monsanto P4 Soda Springs surface data supplemented with data

from the Pocatello airport. Upper air data were from Boise. RTP Environmental processed the data with the current version of AERMET (version 15181). A wind rose of the 5-year meteorological dataset is provided in Figure 5.

The AERMET meteorological processor requires estimates of the following surface characteristics: surface roughness length, albedo, and Bowen ratio. The surface roughness length is related to the height of obstacles to the wind flow. It is the height above the surface where the average wind speed is zero. The smoother the surface is, the lower the roughness length. The surface roughness length influences the surface shear stress and is an important factor in calculating mechanical turbulence and stability. The albedo is the fraction of the total incident solar radiation reflected by the surface back to space without absorption. The Bowen ratio is an indicator of surface moisture and is the ratio of the sensible heat flux to the latent heat flux.

The albedo and Bowen ratio are used for determining the planetary boundary layer parameters for convective conditions due to the surface sensible heat flux. Estimates of the surface characteristics were made using EPA's AERSURFACE program (Version 13016). A 1km search radius was employed at the location of the meteorological tower. Twelve sectors of 30 degrees each and seasonal resolution were used in the AERSURFACE analysis.

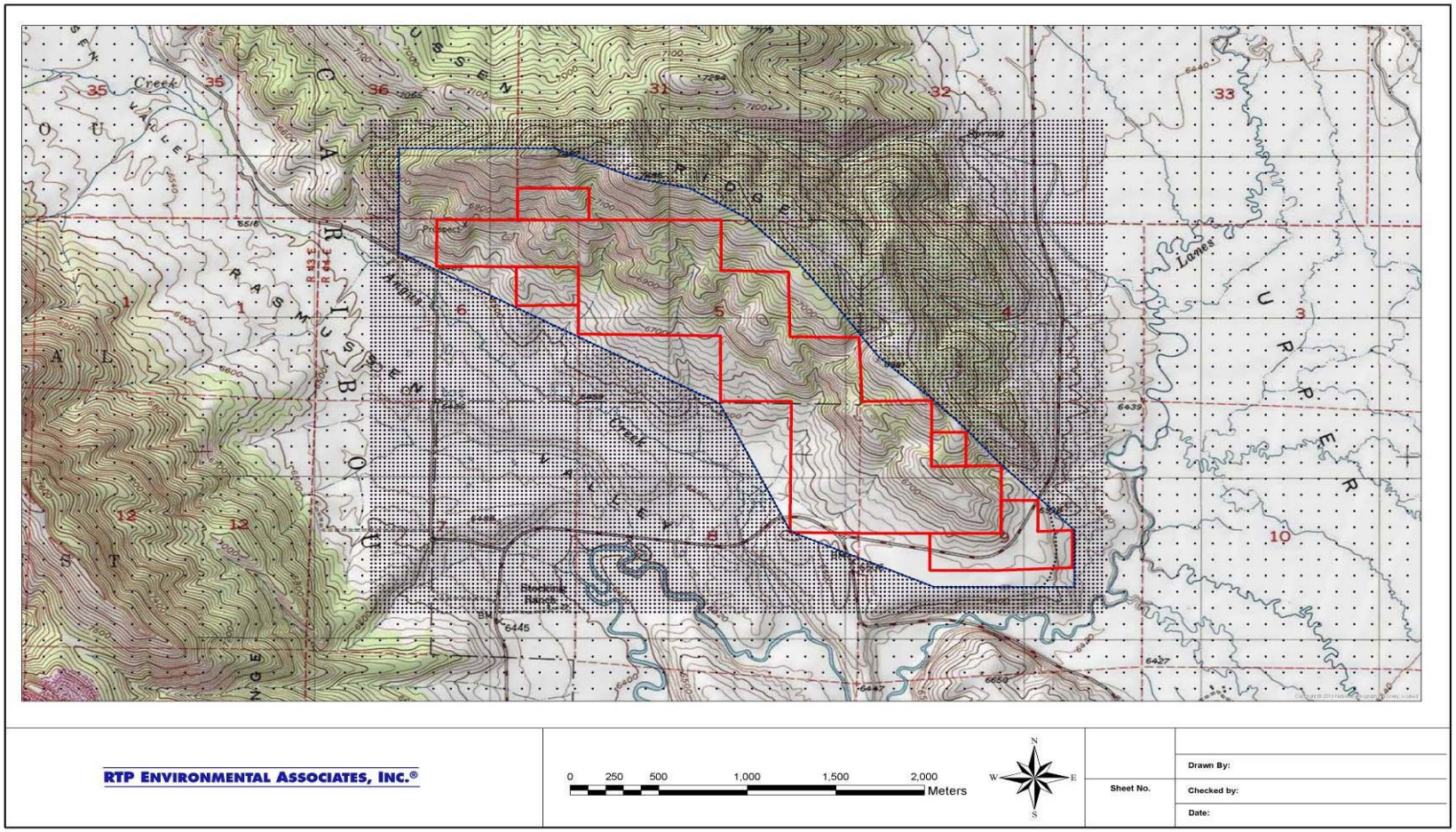

Figure 4. Agrium CPO RVM Near-field Receptor Grid

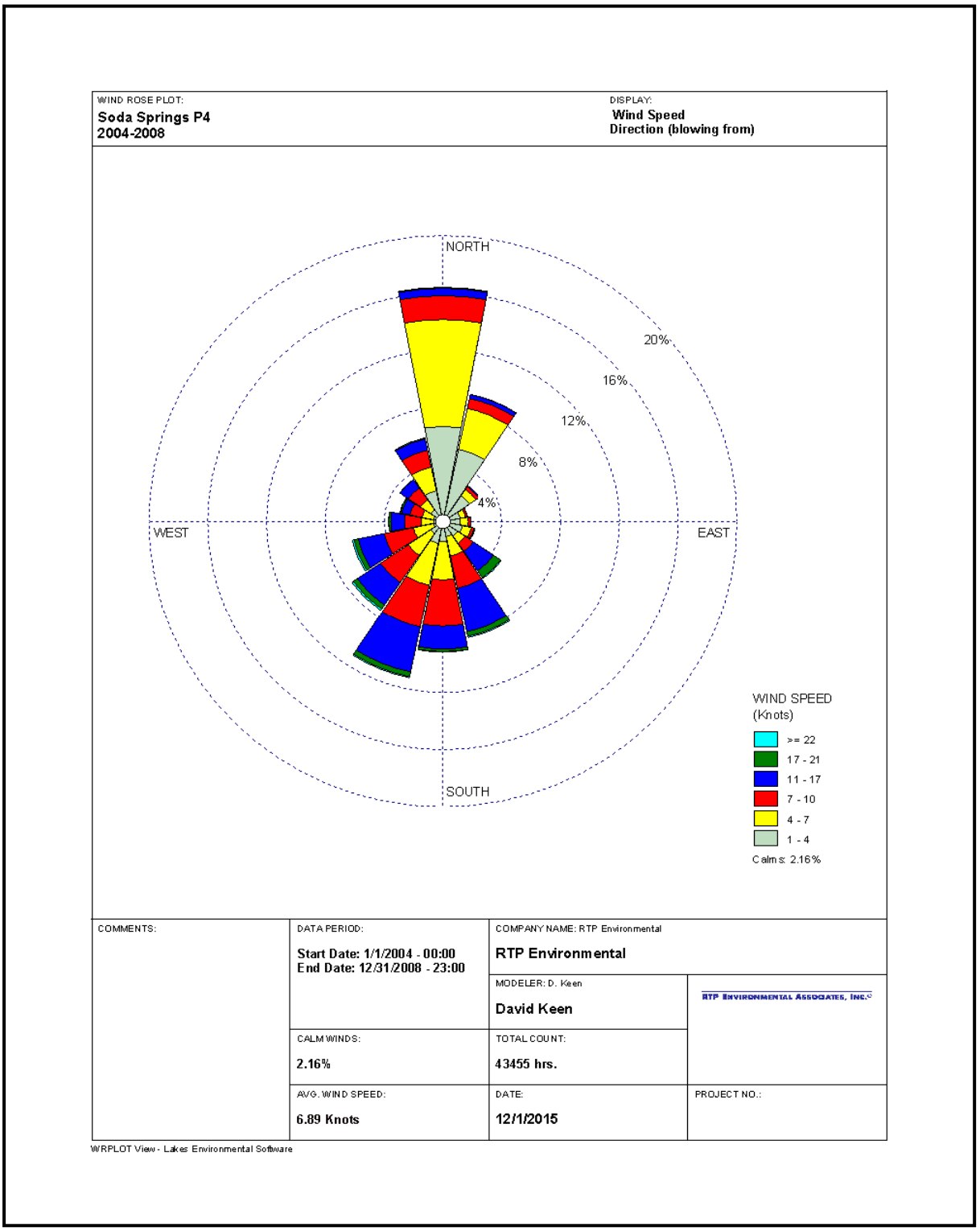

Figure 5. Soda Springs 2004-2008 Wind Rose

4.7 Modeling Methodology

Pollutants Subject to Review

Only the regulated NSR pollutants with total facilty emissions in excess of the DEQ's Level I and Level II modeling thresholds and the toxic air pollutants (TAPs) in excess of the Idaho Screening Emission Levels (ELs) were evaluated in the modeling analysis. The potential emissions of each criteria pollutant relative to the modeling thresholds are presented in Table 5. As can be seen, only PM_{10}, $PM_{2.5}$, and NOx emissions required review. The potential emissions of each TAP relative to the ELs is presented in Table 6. Several TAPs (arsenic, cadmium, and nickel) also required evaluation.

Table 5. Potential Criteria Pollutant Emissions and DEQ Modeling Thresholds

Pollutant	Level I Threshold	Level II Threshold (case-by-case)	Agrium Total Facility Emissions	Modeling Required?
CO	15 lb/hr	175 lb/hr	7.7 lb/hr	No
NOx	1.2 ton/yr and 0.20 lb/hr	14 ton/yr and 2.4 lb/hr	21.1 ton/yr and 4.8 lb/hr	Yes
SO_2	1.2 ton/yr and 0.21 lb/hr	14 ton/yr and 2.5 lb/hr	0.4 lb/hr and 0.1 ton/yr	No
PM_{10}	0.22 lb/hr	2.6 lb/hr	8.9 lb/hr	Yes
$PM_{2.5}$	0.35 ton/yr and 0.054 lb/hr	4.1 ton/yr and 0.63 lb/hr	5.0 ton/yr and 1.2 lb/hr	Yes
Pb	14 lb/month		0.0 lb/month	No

NAAQS Analysis

The Agrium CPO Rasmussen Valley Mine is not a major new source, and is generally located in a rural area away from potential synergistic influences of other industry. However, Agrium CPO also operates the Lanes Creek mine which is located approximately one half of a mile to the east of the proposed RVM.

Table 6. Potential TAP Emissions and DEQ Modeling Thresholds

Pollutant	Level I Threshold (lb/hr)	Agrium Total Facility Emissions (lb/hr)	Modeling Required?
Aluminum	1.33E-01	6.58E-02	No
Antimony	3.30E-02	5.29E-06	No
Arsenic	1.50E-06	4.47E-05	Yes
Beryllium	2.80E-05	4.83E-06	No
Cadmium	3.70E-06	8.38E-05	Yes
Chromium	3.30E-02	8.06E-04	No
Cobalt	3.30E-03	1.73E-04	No
Copper	6.70E-02	1.91E-04	No
Iron	6.70E-02	7.87E-02	Yes
Manganese	3.33E-01	1.88E-03	No
Mercury	2.50E+01	9.11E-05	No
Molybdenum	3.30E-01	2.68E-05	No
Nickel	2.70E-05	4.29E-04	Yes
Selenium	1.30E-02	4.58E-05	No
Silver	7.00E-03	3.79E-06	No
Tungsten	7.00E-03	8.67E-06	No
Uranium	1.30E-02	7.22E-05	No
Zirconium	3.33E-01	1.45E-03	No
Zinc	6.67E-01	2.35E-03	No

Please note that the TAPs emitted from the diesel engines that power the emergency generators and light towers are exempt from modeling review pursuant to Section 210.20 because they are subject to either NSPS or MACT standard. Therefore only TAP emissions from the mining operation were considered.

The DEQ requested that the emissions from the Lanes Creek operation be modeled in conjunction with the RVM in assessing compliance with the NAAQS.

Monsanto's P-4 SRM mining activity to the northeast of the proposed Agrium CPO Rasmussen Valley Mine. The mining operation at the SRM is complete and the mine is

currently being closed down. Agrium CPO plans to fill portions of the open SRM pit with overburden from the new mine. Emissions associated with these activities will be accounted for and included in the Agrium CPO model; however, by the time the RVM is operational, there will be no other emissions from the SRM. Therefore, no other emissions from the SRM were modeled.

Therefore, in assessing NAAQS compliance, modeled impacts from the Agrium CPO RVM and Lanes Creek were added to regional background concentrations. The resultant total concentrations were compared to the NAAQS to determine compliance. It should be noted that increment evaluations are not required by the IDEQ for minor sources.

Demonstration of compliance with the 24-hour PM_{10} NAAQS was based on the highest sixth high value as derived from the five year, concatenated meteorological dataset. Compliance with the 1-hr NO_2 standard was based upon the five year average of the 98th percentile (8th highest value) of the annual distribution of daily maximum 1-hour concentrations. Compliance with the annual NO_2 standard was based upon the maximum modeled impact from each of the five individual years of meteorology. Compliance with the 24-hr $PM_{2.5}$ standard was based upon the eighth highest concentration at each receptor as averaged over five years. Compliance with the annual $PM_{2.5}$ standard will be based upon the highest concentration at each receptor as averaged over five years. The NAAQS are shown in Table 7.

Table 7. National Ambient Air Quality Standards

Pollutant	Averaging Time	National Ambient Air Quality Standards (µg/m³)	
		Primary	Secondary
PM_{10}	24-hour	150	150
$PM_{2.5}$	24-hour	35	35
	Annual	12	15
NO_2	1-hour	188	--
	Annual	100	100

NO_2 and Secondary $PM_{2.5}$ Considerations

Following USEPA guidance, the NO_2 modeling analyses used the Tier 2 (Ambient Ratio Method, or ARM) with the EPA recommended NOx to NO_2 conversion factor of 0.75 for the annual average and 0.80 for the hourly average.

In May of 2014, the EPA issued its final guidance for assessing primary and secondarily formed fine particulate matter ($PM_{2.5}$) in a National Ambient Air Quality Standard (NAAQS) and increment compliance demonstration under Prevention of Significant Deterioration (PSD).[14] The EPA outlines four cases for assessing the primary and secondary $PM_{2.5}$ impacts. The appropriate case to use depends on the magnitude of direct $PM_{2.5}$ and precursor NO_2 and SO_2 emissions. Case 1 is applicable to the Agrium CPO mine as direct $PM_{2.5}$ emissions are less than 10 tons per year and NOx emissions are less than 40 tons per year (precursor SO_2 emissions are also less than 40 tons per year). In this case, a $PM_{2.5}$ compliance demonstration is not required (under federal guidance) for either the direct $PM_{2.5}$ emissions or for the precursor emissions. Therefore, the potential for secondary $PM_{2.5}$ impacts was not evaluated. Per IDEQ guidance, however, RTP modeled the direct $PM_{2.5}$ emissions using approved dispersion techniques to assess compliance with the NAAQS.

Toxic Air Pollutant Analysis

Compliance with the applicable TAP increments of Idaho Air Rules Section 585 for non-carcinogens (AACs) and 586 for carcinogens (AACCs) was also assessed. The modeling procedures described above were used to calculate the maximum 24-hour and maximum annual average values for assessing compliance with the TAP increments.

Model Scenarios and Source Groupings

The mining operation at Rasmussen Valley will occur in nine phases as shown in Figure 6. The majority of mine emissions at any point in time will occur from only one phase of

[14] Guidance for PM2.5 Permit Modeling, EPA-454/B-14-001, May 2014.

the mine. To most accurately represent the potential impacts from the mine over time, RTP modeled an initial phase (Phase 2), a middle phase (Phase 5) and one of the last phases (Phase 8). Even though Phases 1 and 9 are closer to the modeling boundary, these phases will not be in operation very long and will have the smallest open pits and thus lower emissions. Phases 2 and 8 are therefore the worst-case from an air quality perspective. The modeled sources and emissions were assumed the same for each phase. All three phases were included in a single model run with different source groupings for each phase. The Lanes Creek mining operations were included with each of the RVM mine phases. The phase resulting in the highest concentrations was used to represent the impacts from the mining operation.

In addition to the three source groupings for each of the modeled RVM mine phases, a separate source grouping was included in the NAAQS runs for each of the RVM mine phases that did not include the Lanes Creek mine. These source groupings were used to evaluate NAAQS compliance in the absence of influence from Lanes Creek mine.

The following source groups were therefore included with each model run:

1. “Phase2” – RVM Phase 2 mine, including Lanes Creek mine
2. “Phase5” – RVM Phase 5 mine, including Lanes Creek mine
3. “Phase8” – RVM Phase 8 mine, including Lanes Creek mine
4. “P2_NO_LC” – RVM Phase 2 mine, excluding Lanes Creek mine
5. “P5_NO_LC” – RVM Phase 5 mine, excluding Lanes Creek mine
6. “P8_NO_LC” – RVM Phase 8 mine, excluding Lanes Creek mine

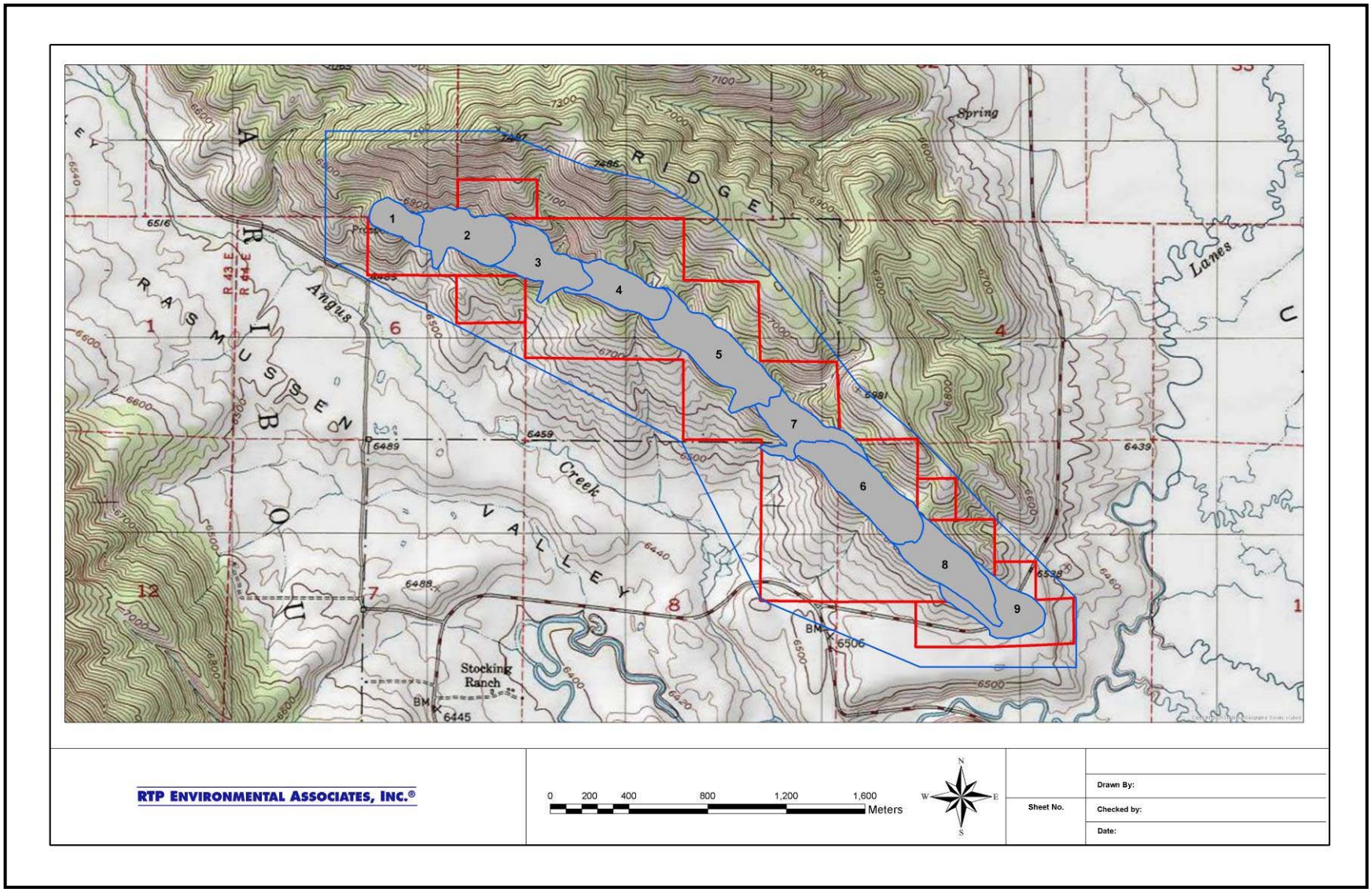

Figure 6. Mining Phases for the Rasmussen Valley Mine

4.8 Model Results

Appendix G provides the model summary input and output data, respectively. Electronic versions AERMOD input and output files, including the BEEST graphical user interface files, are included on the enclosed CD.

NAAQS Analysis Results

The results of the NAAQS analyses are presented in Table 8. Only the mine phase that resulted in the worst-case impact is presented. The impacts for each of the other phases can be found in Appendix G. The maximum combined impacts from all RVM sources and the Lanes Creek mine are presented. A background concentration was added to the modeled impacts in assessing compliance with the NAAQS.

As shown, the model indicates potential NAAQS exceedances for the 1-hr NO_2 and 24-hr PM_{10} standards. However, these modeled exceedances are due to emissions from the Lanes Creek mine and the exceedances only occur within the confines of the Lanes Creek mine (Figures 7 and 8). Since the Lanes Creek mine cannot impact the area within its own boundary, the exceedances do not occur in ambient air. In addition, when emissions from the Lanes Creek facility are not included in the modeled concentrations, and only emissions from RVM are considered, compliance is demonstrated.

Toxic Air Pollutant Analysis Results

The results of the toxic air pollutant (TAP) analyses are presented in Table 9. The maximum combined impacts from all Agrium CPO sources are presented. As shown, the impacts are below the TAP increments of Idaho Air Rules Section 585 for non-carcinogens (AACs) and 586 for carcinogens (AACCs).

Table 8. NAAQS Analysis Results

Pollutant	Averaging Period	Modeled Concentration (µg/m³)	Background Concentration (µg/m³)[a]	Total Concentration (µg/m³)	Standard	% of Standard
PM_{10}	24-hr	162.0	34.0	196.0	150.0	131[b]
		105.8	34.0	139.8	150.0	93[c]
$PM_{2.5}$	24-hr	16.3	6.5	22.8	35.0	65
	Annual	8.0	1.8	9.8	12.0	82
NO_2[d]	1-hr	398.6	17.2	415.8	188.0	221[b]
		63.5	17.2	80.7	188.0	43[c]
	Annual	34.6	1.5	36.1	100.00	36

Notes:
[a] All background concentrations provided by DEQ.
[b] Agrium Lanes Creek mine included. Modeled exceedances are due to emissions from Lanes Creek mine. All exceedances occur within Lanes Creek ambient boundary which is not considered as ambient air for RVM.
[c] Emissions from Lanes Creek mine not included.
[d] ARM of 0.75 applied to annual NOx modeled impact and ARM of 0.80 applied to 1-hr NOx impact.

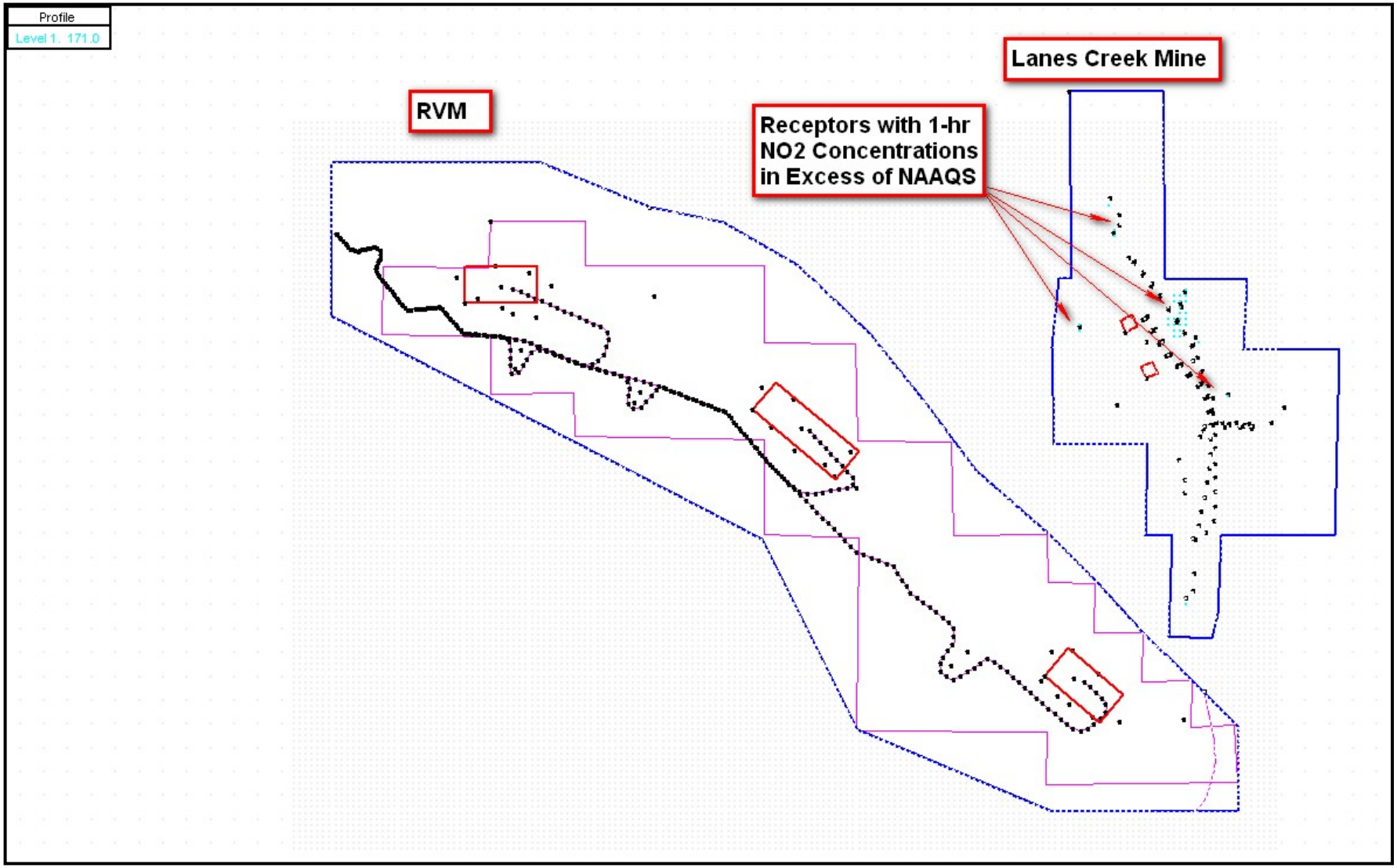

Figure 7. Receptors with Modeled Concentrations in Excess of 1-hr NO_2 NAAQS

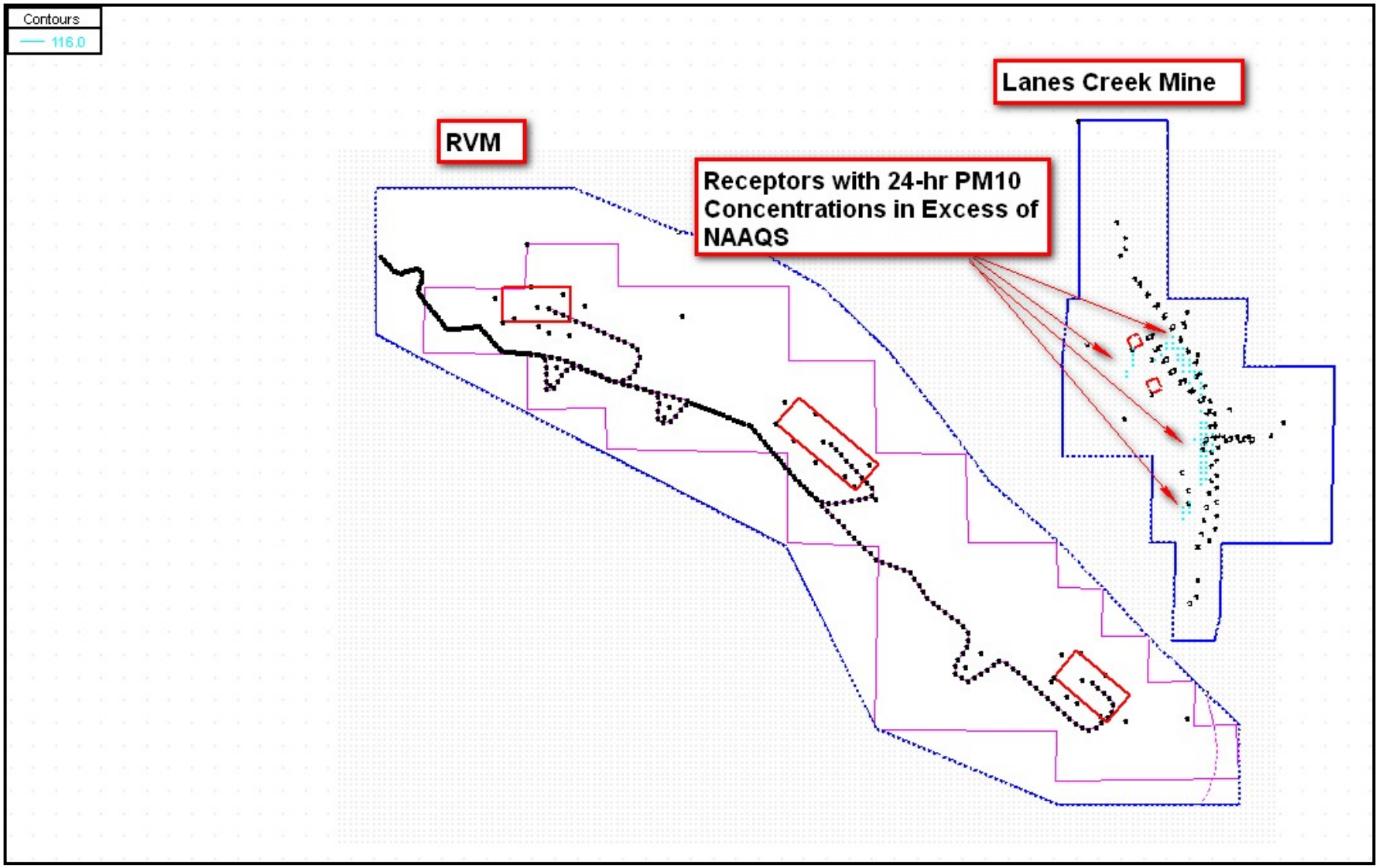

Figure 8. Receptors with Modeled Concentrations in Excess of 24-hr PM_{10} NAAQS

Table 9. Toxic Air Pollutant Analysis Results

Toxic Air Pollutant	Averaging Period	Maximum Modeled Concentration (µg/m³)	Acceptable Ambient Concentration (µg/m³)	% Standard
Arsenic	Annual	1.40E-04	2.3.E-04	61%
Cadmium	Annual	3.10E-04	5.6.E-04	55%
Iron	Annual	1.24E-00	5.0.E+01	2%
Nickel	Annual	1.34E-03	4.2.E-03	32%

Note: Phase 2 was found to result in the highest modeled concentration.

4.9 Summary and Conclusions

Emissions of regulated pollutants were evaluated in a dispersion modeling analysis. The modeling demonstrates that the ground level concentrations of each pollutant are below the levels designed to protect human health and welfare. The modeling input and output files and results are provided on the attached CD as Appendix G. The summary results list the model file names associated with each phase of the analysis.[15]

[15] As a general rule, the AERMOD input files have a “dta” extension. The AERMOD output files have a “lst” extension.

APPENDICES

Appendix A - PTC Permit Application Forms
Appendix B - Anticipated Construction Schedule
Appendix C - Dust Control Plan
Appendix D - Emission Calculations (Provided on CD)
Appendix E - Diesel Generator Data Sheets & Information
Appendix F - EPA Non-Road Engine Emission Limits Applicable to RVM
Appendix G - Air Quality Dispersion Modeling (Modeling Files Provided on CD)

Appendix A

PTC Permit Application Forms

DEQ AIR QUALITY PROGRAM
1410 N. Hilton, Boise, ID 83706
For assistance, call the
Air Permit Hotline – 1-877-5PERMIT

Cover Sheet for Air Permit Application – Permit to Construct **Form CSPTC**

Please see instructions on page 2 before filling out the form.

COMPANY NAME, FACILITY NAME, AND FACILITY ID NUMBER			
1. Company Name	Nu West Industries, Inc. dba Agrium		
2. Facility Name	Rasmussen Valley Mine	3. Facility ID No.	TBD
4. Brief Project Description - One sentence or less	Phosphate Mining		

PERMIT APPLICATION TYPE

5. ☒ New Source ☐ New Source at Existing Facility ☐ PTC for a Tier I Source Processed Pursuant to IDAPA 58.01.01.209.05.c
☐ Unpermitted Existing Source ☐ Facility Emissions Cap ☐ Modify Existing Source: Permit No.:_____ Date Issued:_____
☐ Required by Enforcement Action: Case No.:_____

6. ☒ Minor PTC ☐ Major PTC

FORMS INCLUDED

Included	N/A	Forms		DEQ Verify
☒	☐	Form CSPTC – Cover Sheet		☐
☒	☐	Form GI – Facility Information		☐
☐	☐	Form EU0 – Emissions Units General		☐
☒	☐	Form EU1– Industrial Engine Information	Please specify number of EU1s attached: 12	☐
☐	☒	Form EU2– Nonmetallic Mineral Processing Plants	Please specify number of EU2s attached: _____	☐
☐	☒	Form EU3– Spray Paint Booth Information	Please specify number of EU3s attached:	☐
☐	☒	Form EU4– Cooling Tower Information	Please specify number of EU3s attached: _____	☐
☐	☒	Form EU5 – Boiler Information	Please specify number of EU4s attached: _____	☐
☐	☒	Form CBP– Concrete Batch Plant	Please specify number of CBPs attached: _____	☐
☐	☒	Form HMAP – Hot Mix Asphalt Plant	Please specify number of HMAPs attached: _____	☐
☐	☒	PERF – Portable Equipment Relocation Form		☐
☐	☒	Form AO – Afterburner/Oxidizer		☐
☐	☒	Form CA – Carbon Adsorber		☐
☐	☒	Form CYS – Cyclone Separator		☐
☐	☒	Form ESP – Electrostatic Precipitator		☐
☐	☒	Form BCE– Baghouses Control Equipment		☐
☐	☒	Form SCE– Scrubbers Control Equipment		☐
☐	☒	Form VSCE – Venturi Scrubber Control Equipment		☐
☐	☒	Form CAM – Compliance Assurance Monitoring		☐
☒	☐	Forms EI-– Emissions Inventory (see Table 1 of application and Appendix D Tabs “PTE Tables” and “PTE Metal TAPs”)		☐
☒	☐	PP – Plot Plan		☐
☐	☒	Forms MI1 – MI4 – Modeling	Information in modeling file CD (Appendix G of application)	☐
☒	☐	Form FRA – Federal Regulation Applicability		☐

DEQ AIR QUALITY PROGRAM
1410 N. Hilton, Boise, ID 83706
For assistance, call the
Air Permit Hotline – 1-877-5PERMIT

General Information **Form GI**
Revision 7
2/18/10

Please see instructions on page 2 before filling out the form.

All information is required. If information is missing, the application will not be processed.

IDENTIFICATION

1. Company Name	2. Facility Name:
Nu-West Industries dba Agrium	Rasmussen Valley Mine

3. Brief Project Description:	Phosphate Mining

FACILITY INFORMATION

4. Primary Facility Permit Contact Person/Title	Alan Haslam		Director of Mining	
5. Telephone Number and Email Address	(208) 351-9813		Alan.Haslam@agrium.com	
6. Alternate Facility Contact Person/Title	Chris Guedes		Mine Permitting Project Lead	
7. Telephone Number and Email Address	(208) 547-1890		chris.guedes@agrium.com	
8. Address to Which the Permit Should be Sent	3010 Conda Road			
9. City/County/State/Zip Code	Soda Springs	Caribou	Idaho	83276
10. Equipment Location Address (if different than the mailing address above)	NA			
11. City/County/State/Zip Code	NA			
12. Is the Equipment Portable?	☐ Yes ☒ No			
13. SIC Code(s) and NAICS Code	Primary SIC: 1475	Secondary SIC:	NAICS: 212392	
14. Brief Business Description and Principal Product	Phosphate Mine - Phosphate Ore			
15. Indentify any adjacent or contiguous facility that this company owns and/or operates	NA			
16. Specify the reason for the application	☐ Permit to Construct (PTC) For Tier I permitted facilities only: If you are applying for a PTC then you must also specify how the PTC will be incorporated into the Tier I permit. ☐ Incorporate the PTC at the time of the Tier I renewal ☐ Co-process the Tier I modification and PTC ☐ Administratively amend the Tier I permit to incorporate the PTC upon your request (IDAPA 58.01.01.209.05.a, b, or c) ☐ Tier I Permit ☐ Tier II Permit ☒ Tier II/Permit to Construct			

CERTIFICATION

In accordance with **IDAPA 58.01.01.123 (Rules for the Control of Air Pollution in Idaho), I** certify based on information and belief formed after reasonable inquiry, the statements and information in the document(s) are true, accurate, and complete.

17. Responsible Official's Name/Title	Alan Haslam	Director of Mining	
18. Responsible Official Address	3010 Conda Road, Soda Springs, ID 83276		
19.Responsible Official Telephone Number	(208) 351-9813		
20. Responsible Official Email Address	Alan.Haslam@agrium.com		
21. Responsible Official's Signature	Alan Haslam	Date:	5/5/2016

22. ☒ Check here to indicate that you would like to review the draft permit prior to final issuance.

DEQ AIR QUALITY PROGRAM
1410 N. Hilton, Boise, ID 83706
For assistance, call the
Air Permit Hotline – 1-877-5PERMIT

Emissions Units - Industrial Engine Information **Form EU1**
Revision 8
1/15/10

Please see instructions on page 2 before filling out the form.

IDENTIFICATION

1. Company Name:	2. Facility Name:	
Nu-West Industries, dba/ Agrium	Rasmussen Valley Mine	
3 Brief Project Description:	Phosphate Mining	

ENGINE (EMISSION UNIT) DESCRIPTION AND SPECIFICATIONS

4. Type of Unit:	☒ New Unit ☐ Unpermitted Existing Unit ☐ Modification to a Unit with Permit #: Date Issued:		
5. Engine Displacement:	4 cylinders each 1.13 (liters per cylinder)	6. Ignition Type:	☒ Compression ☐ Spark
7. Use	☐ Emergency ☒ Non-Emergency		
8. Engine ID Number:	9. Maximum Rated Engine Power:		
Ready Line Generator	_____ Brake Horsepower (bhp)		
10. Construction Date:	11. Manufacturer:	12. Model:	13. Model Year:
2017	John Deer	4045HFG92 (107 bhp)	2012
14. Date of Modification (if applicable):	15. Serial Number (if available):	16. Control Device (if any):	
None	N/A	None	

FUEL DESCRIPTION AND SPECIFICATIONS

17. Fuel Type	☒ Diesel Fuel (#2) (gal/hr)	☐ Gasoline Fuel (gal/hr)	☐ Natural Gas (cf/hr)	☐ Other Fuels (unit:)
18. Full Load Consumption Rate	4.3 gal/hr	NA	NA	NA
19. Actual Consumption Rate	4.3 gal/hr	NA	NA	NA
20. Sulfur Content wt%	0.0015 %	N/A	N/A	NA

OPERATING LIMITS & SCHEDULE

21. Imposed Operating Limits (hours/year, or gallons fuel/year, etc.):

8,760 Hours/Year

22. Operating Schedule (hours/day, months/year, etc.):

8,760 Hours/Year

DEQ AIR QUALITY PROGRAM
1410 N. Hilton, Boise, ID 83706
For assistance, call the
Air Permit Hotline – 1-877-5PERMIT

Emissions Units - Industrial Engine Information **Form EU1**
Revision 8
1/15/10

Please see instructions on page 2 before filling out the form.

IDENTIFICATION

1. Company Name:	2. Facility Name:	
Nu-West Industries, dba/ Agrium	Rasmussen Valley Mine	
3 Brief Project Description:	Phosphate Mining	

ENGINE (EMISSION UNIT) DESCRIPTION AND SPECIFICATIONS

4. Type of Unit:	☐ New Unit ☐ Unpermitted Existing Unit ☒ Modification to a Unit with Permit #:P-2013.0046 Date Issued: 2015		
5. Engine Displacement:	4 cylinders each 1.13 (liters per cylinder)	6. Ignition Type:	☒ Compression ☐ Spark
7. Use	☐ Emergency ☒ Non-Emergency		
8. Engine ID Number:	9. Maximum Rated Engine Power:		
Well Pump 1	_____ Brake Horsepower (bhp)		
10. Construction Date:	11. Manufacturer:	12. Model:	13. Model Year:
Existing- installed 2015	John Deer	4045HF285 (113 bhp)	2012
14. Date of Modification (if applicable):	15. Serial Number (if available):	16. Control Device (if any):	
None	N/A	None	

FUEL DESCRIPTION AND SPECIFICATIONS

17. Fuel Type	☒ Diesel Fuel (#2) (gal/hr)	☐ Gasoline Fuel (gal/hr)	☐ Natural Gas (cf/hr)	☐ Other Fuels (unit:)
18. Full Load Consumption Rate	5.3 gal/hr	NA	NA	NA
19. Actual Consumption Rate	5.3 gal/hr	NA	NA	NA
20. Sulfur Content wt%	0.0015 %	N/A	N/A	NA

OPERATING LIMITS & SCHEDULE

21. Imposed Operating Limits (hours/year, or gallons fuel/year, etc.):

8,760 Hours/Year

22. Operating Schedule (hours/day, months/year, etc.):

8,760 Hours/Year

DEQ AIR QUALITY PROGRAM
1410 N. Hilton, Boise, ID 83706
For assistance, call the
Air Permit Hotline – 1-877-5PERMIT

Emissions Units - Industrial Engine Information **Form EU1**
Revision 8
1/15/10

Please see instructions on page 2 before filling out the form.

IDENTIFICATION

1. Company Name:	2. Facility Name:	
Nu-West Industries, dba/ Agrium	Rasmussen Valley Mine	
3 Brief Project Description:	Phosphate Mining	

ENGINE (EMISSION UNIT) DESCRIPTION AND SPECIFICATIONS

4. Type of Unit: ☒ New Unit ☐ Unpermitted Existing Unit
☐ Modification to a Unit with Permit #: Date Issued:

5. Engine Displacement:	4 cylinders each 0.54 (liters per cylinder)	6. Ignition Type:	☒ Compression ☐ Spark
7. Use	☐ Emergency ☒ Non-Emergency		

8. Engine ID Number:	9. Maximum Rated Engine Power:		
Well Pump 2	_____ Brake Horsepower (bhp)		
10. Construction Date:	11. Manufacturer:	12. Model:	13. Model Year:
2017	Isuzu	4LE2X (65.7 bhp)	2013
14. Date of Modification (if applicable):	15. Serial Number (if available):	16. Control Device (if any):	
None	N/A	None	

FUEL DESCRIPTION AND SPECIFICATIONS

17. Fuel Type	☒ Diesel Fuel (#2) (gal/hr)	☐ Gasoline Fuel (gal/hr)	☐ Natural Gas (cf/hr)	☐ Other Fuels (unit:)
18. Full Load Consumption Rate	2.93 gal/hr	NA	NA	NA
19. Actual Consumption Rate	2.93 gal/hr	NA	NA	NA
20. Sulfur Content wt%	0.0015 %	N/A	N/A	NA

OPERATING LIMITS & SCHEDULE

21. Imposed Operating Limits (hours/year, or gallons fuel/year, etc.):

8,760 Hours/Year

22. Operating Schedule (hours/day, months/year, etc.):

8,760 Hours/Year

DEQ AIR QUALITY PROGRAM
1410 N. Hilton, Boise, ID 83706
For assistance, call the
Air Permit Hotline – 1-877-5PERMIT

Emissions Units - Industrial Engine Information **Form EU1**
Revision 8
1/15/10

Please see instructions on page 2 before filling out the form.

IDENTIFICATION

1. Company Name:	2. Facility Name:	
Nu-West Industries, dba/ Agrium	Rasmussen Valley Mine	
3 Brief Project Description:	Phosphate Mining	

ENGINE (EMISSION UNIT) DESCRIPTION AND SPECIFICATIONS

4. Type of Unit:	☒ New Unit ☐ Unpermitted Existing Unit ☐ Modification to a Unit with Permit #: Date Issued:		
5. Engine Displacement:	3 cylinders each 0.5 (liters per cylinder)	6. Ignition Type:	☒ Compression ☐ Spark
7. Use	☐ Emergency ☒ Non-Emergency		
8. Engine ID Number:	9. Maximum Rated Engine Power:		
Diesel Light Plant 1	_____ Brake Horsepower (bhp)		
10. Construction Date:	11. Manufacturer:	12. Model:	13. Model Year:
2017	Caterpillar	C1.5T (24.7 bhp)	2013
14. Date of Modification (if applicable):	15. Serial Number (if available):	16. Control Device (if any):	
None	N/A	None	

FUEL DESCRIPTION AND SPECIFICATIONS

17. Fuel Type	☒ Diesel Fuel (#2) (gal/hr)	☐ Gasoline Fuel (gal/hr)	☐ Natural Gas (cf/hr)	☐ Other Fuels (unit:)
18. Full Load Consumption Rate	1.48 gal/hr	NA	NA	NA
19. Actual Consumption Rate	1.48 gal/hr	NA	NA	NA
20. Sulfur Content wt%	0.0015 %	N/A	N/A	NA

OPERATING LIMITS & SCHEDULE

21. Imposed Operating Limits (hours/year, or gallons fuel/year, etc.):

8,760 Hours/Year

22. Operating Schedule (hours/day, months/year, etc.):

8,760 Hours/Year

DEQ AIR QUALITY PROGRAM
1410 N. Hilton, Boise, ID 83706
For assistance, call the
Air Permit Hotline – 1-877-5PERMIT

Emissions Units - Industrial Engine Information **Form EU1**
Revision 8
1/15/10

Please see instructions on page 2 before filling out the form.

IDENTIFICATION

1. Company Name:	2. Facility Name:	
Nu-West Industries, dba/ Agrium	Rasmussen Valley Mine	
3 Brief Project Description:	Phosphate Mining	

ENGINE (EMISSION UNIT) DESCRIPTION AND SPECIFICATIONS

4. Type of Unit:	☒ New Unit ☐ Unpermitted Existing Unit ☐ Modification to a Unit with Permit #: Date Issued:		
5. Engine Displacement:	3 cylinders each 0.5 (liters per cylinder)	6. Ignition Type:	☒ Compression ☐ Spark
7. Use	☐ Emergency ☒ Non-Emergency		
8. Engine ID Number:	9. Maximum Rated Engine Power:		
Diesel Light Plant 2	_____ Brake Horsepower (bhp)		
10. Construction Date:	11. Manufacturer:	12. Model:	13. Model Year:
2017	Caterpillar	C1.5T (24.7 bhp)	2013
14. Date of Modification (if applicable):	15. Serial Number (if available):	16. Control Device (if any):	
None	N/A	None	

FUEL DESCRIPTION AND SPECIFICATIONS

17. Fuel Type	☒ Diesel Fuel (#2) (gal/hr)	☐ Gasoline Fuel (gal/hr)	☐ Natural Gas (cf/hr)	☐ Other Fuels (unit:)
18. Full Load Consumption Rate	1.48 gal/hr	NA	NA	NA
19. Actual Consumption Rate	1.48 gal/hr	NA	NA	NA
20. Sulfur Content wt%	0.0015 %	N/A	N/A	NA

OPERATING LIMITS & SCHEDULE

21. Imposed Operating Limits (hours/year, or gallons fuel/year, etc.):

8,760 Hours/Year

22. Operating Schedule (hours/day, months/year, etc.):

8,760 Hours/Year

DEQ AIR QUALITY PROGRAM
1410 N. Hilton, Boise, ID 83706
For assistance, call the
Air Permit Hotline – 1-877-5PERMIT

Emissions Units - Industrial Engine Information **Form EU1**
Revision 8
1/15/10

Please see instructions on page 2 before filling out the form.

IDENTIFICATION

1. Company Name:	2. Facility Name:	
Nu-West Industries, dba/ Agrium	Rasmussen Valley Mine	
3 Brief Project Description:	Phosphate Mining	

ENGINE (EMISSION UNIT) DESCRIPTION AND SPECIFICATIONS

4. Type of Unit:	☒ New Unit ☐ Unpermitted Existing Unit ☐ Modification to a Unit with Permit #: Date Issued:		
5. Engine Displacement:	3 cylinders each 0.5 (liters per cylinder)	6. Ignition Type:	☒ Compression ☐ Spark
7. Use	☐ Emergency ☒ Non-Emergency		
8. Engine ID Number:	9. Maximum Rated Engine Power:		
Diesel Light Plant 3	_____ Brake Horsepower (bhp)		
10. Construction Date:	11. Manufacturer:	12. Model:	13. Model Year:
2017	Caterpillar	C1.5T (24.7 bhp)	2013
14. Date of Modification (if applicable):	15. Serial Number (if available):	16. Control Device (if any):	
None	N/A	None	

FUEL DESCRIPTION AND SPECIFICATIONS

17. Fuel Type	☒ Diesel Fuel (#2) (gal/hr)	☐ Gasoline Fuel (gal/hr)	☐ Natural Gas (cf/hr)	☐ Other Fuels (unit:)
18. Full Load Consumption Rate	1.48 gal/hr	NA	NA	NA
19. Actual Consumption Rate	1.48 gal/hr	NA	NA	NA
20. Sulfur Content wt%	0.0015 %	N/A	N/A	NA

OPERATING LIMITS & SCHEDULE

21. Imposed Operating Limits (hours/year, or gallons fuel/year, etc.):

8,760 Hours/Year

22. Operating Schedule (hours/day, months/year, etc.):

8,760 Hours/Year

DEQ AIR QUALITY PROGRAM
1410 N. Hilton, Boise, ID 83706
For assistance, call the
Air Permit Hotline – 1-877-5PERMIT

Emissions Units - Industrial Engine Information **Form EU1**
Revision 8
1/15/10

Please see instructions on page 2 before filling out the form.

IDENTIFICATION

1. Company Name:	2. Facility Name:	
Nu-West Industries, dba/ Agrium	Rasmussen Valley Mine	
3 Brief Project Description:	Phosphate Mining	

ENGINE (EMISSION UNIT) DESCRIPTION AND SPECIFICATIONS

4. Type of Unit:	☒ New Unit ☐ Unpermitted Existing Unit ☐ Modification to a Unit with Permit #: Date Issued:		
5. Engine Displacement:	3 cylinders each 0.5 (liters per cylinder)	6. Ignition Type:	☒ Compression ☐ Spark
7. Use	☐ Emergency ☒ Non-Emergency		
8. Engine ID Number:	9. Maximum Rated Engine Power:		
Diesel Light Plant 4	_____ Brake Horsepower (bhp)		
10. Construction Date:	11. Manufacturer:	12. Model:	13. Model Year:
2017	Caterpillar	C1.5T (24.7 bhp)	2013
14. Date of Modification (if applicable):	15. Serial Number (if available):	16. Control Device (if any):	
None	N/A	None	

FUEL DESCRIPTION AND SPECIFICATIONS

17. Fuel Type	☒ Diesel Fuel (#2) (gal/hr)	☐ Gasoline Fuel (gal/hr)	☐ Natural Gas (cf/hr)	☐ Other Fuels (unit:)
18. Full Load Consumption Rate	1.48 gal/hr	NA	NA	NA
19. Actual Consumption Rate	1.48 gal/hr	NA	NA	NA
20. Sulfur Content wt%	0.0015 %	N/A	N/A	NA

OPERATING LIMITS & SCHEDULE

21. Imposed Operating Limits (hours/year, or gallons fuel/year, etc.):

8,760 Hours/Year

22. Operating Schedule (hours/day, months/year, etc.):

8,760 Hours/Year

DEQ AIR QUALITY PROGRAM
1410 N. Hilton, Boise, ID 83706
For assistance, call the
Air Permit Hotline – 1-877-5PERMIT

Emissions Units - Industrial Engine Information **Form EU1**
Revision 8
1/15/10

Please see instructions on page 2 before filling out the form.

IDENTIFICATION

1. Company Name:	2. Facility Name:	
Nu-West Industries, dba/ Agrium	Rasmussen Valley Mine	
3 Brief Project Description:	Phosphate Mining	

ENGINE (EMISSION UNIT) DESCRIPTION AND SPECIFICATIONS

4. Type of Unit:	☒ New Unit ☐ Unpermitted Existing Unit ☐ Modification to a Unit with Permit #: Date Issued:		
5. Engine Displacement:	3 cylinders each 0.5 (liters per cylinder)	6. Ignition Type:	☒ Compression ☐ Spark
7. Use	☐ Emergency ☒ Non-Emergency		
8. Engine ID Number:	9. Maximum Rated Engine Power:		
Diesel Light Plant 5	_____ Brake Horsepower (bhp)		
10. Construction Date:	11. Manufacturer:	12. Model:	13. Model Year:
2017	Caterpillar	C1.5T (24.7 bhp)	2013
14. Date of Modification (if applicable):	15. Serial Number (if available):	16. Control Device (if any):	
None	N/A	None	

FUEL DESCRIPTION AND SPECIFICATIONS

17. Fuel Type	☒ Diesel Fuel (#2) (gal/hr)	☐ Gasoline Fuel (gal/hr)	☐ Natural Gas (cf/hr)	☐ Other Fuels (unit:)
18. Full Load Consumption Rate	1.48 gal/hr	NA	NA	NA
19. Actual Consumption Rate	1.48 gal/hr	NA	NA	NA
20. Sulfur Content wt%	0.0015 %	N/A	N/A	NA

OPERATING LIMITS & SCHEDULE

21. Imposed Operating Limits (hours/year, or gallons fuel/year, etc.):

8,760 Hours/Year

22. Operating Schedule (hours/day, months/year, etc.):

8,760 Hours/Year

DEQ AIR QUALITY PROGRAM
1410 N. Hilton, Boise, ID 83706
For assistance, call the
Air Permit Hotline – 1-877-5PERMIT

Emissions Units - Industrial Engine Information **Form EU1**
Revision 8
1/15/10

Please see instructions on page 2 before filling out the form.

IDENTIFICATION

1. Company Name:	2. Facility Name:	
Nu-West Industries, dba/ Agrium	Rasmussen Valley Mine	
3 Brief Project Description:	Phosphate Mining	

ENGINE (EMISSION UNIT) DESCRIPTION AND SPECIFICATIONS

4. Type of Unit:	☒ New Unit ☐ Unpermitted Existing Unit ☐ Modification to a Unit with Permit #: Date Issued:		
5. Engine Displacement:	3 cylinders each 0.5 (liters per cylinder)	6. Ignition Type:	☒ Compression ☐ Spark
7. Use	☐ Emergency ☒ Non-Emergency		
8. Engine ID Number:	9. Maximum Rated Engine Power:		
Diesel Light Plant 6	_____ Brake Horsepower (bhp)		
10. Construction Date:	11. Manufacturer:	12. Model:	13. Model Year:
2017	Caterpillar	C1.5T (24.7 bhp)	2013
14. Date of Modification (if applicable):	15. Serial Number (if available):	16. Control Device (if any):	
None	N/A	None	

FUEL DESCRIPTION AND SPECIFICATIONS

17. Fuel Type	☒ Diesel Fuel (#2) (gal/hr)	☐ Gasoline Fuel (gal/hr)	☐ Natural Gas (cf/hr)	☐ Other Fuels (unit:)
18. Full Load Consumption Rate	1.48 gal/hr	NA	NA	NA
19. Actual Consumption Rate	1.48 gal/hr	NA	NA	NA
20. Sulfur Content wt%	0.0015 %	N/A	N/A	NA

OPERATING LIMITS & SCHEDULE

21. Imposed Operating Limits (hours/year, or gallons fuel/year, etc.):

8,760 Hours/Year

22. Operating Schedule (hours/day, months/year, etc.):

8,760 Hours/Year

DEQ AIR QUALITY PROGRAM
1410 N. Hilton, Boise, ID 83706
For assistance, call the
Air Permit Hotline – 1-877-5PERMIT

Emissions Units - Industrial Engine Information **Form EU1**
Revision 8
1/15/10

Please see instructions on page 2 before filling out the form.

IDENTIFICATION

1. Company Name:	2. Facility Name:	
Nu-West Industries, dba/ Agrium	Rasmussen Valley Mine	
3 Brief Project Description:	Phosphate Mining	

ENGINE (EMISSION UNIT) DESCRIPTION AND SPECIFICATIONS

4. Type of Unit:	☒ New Unit ☐ Unpermitted Existing Unit ☐ Modification to a Unit with Permit #: Date Issued:		
5. Engine Displacement:	3 cylinders each 0.5 (liters per cylinder)	6. Ignition Type:	☒ Compression ☐ Spark
7. Use	☐ Emergency ☒ Non-Emergency		
8. Engine ID Number:	9. Maximum Rated Engine Power:		
Diesel Light Plant 7	_____ Brake Horsepower (bhp)		
10. Construction Date:	11. Manufacturer:	12. Model:	13. Model Year:
2017	Caterpillar	C1.5T (24.7 bhp)	2013
14. Date of Modification (if applicable):	15. Serial Number (if available):	16. Control Device (if any):	
None	N/A	None	

FUEL DESCRIPTION AND SPECIFICATIONS

17. Fuel Type	☒ Diesel Fuel (#2) (gal/hr)	☐ Gasoline Fuel (gal/hr)	☐ Natural Gas (cf/hr)	☐ Other Fuels (unit:)
18. Full Load Consumption Rate	1.48 gal/hr	NA	NA	NA
19. Actual Consumption Rate	1.48 gal/hr	NA	NA	NA
20. Sulfur Content wt%	0.0015 %	N/A	N/A	NA

OPERATING LIMITS & SCHEDULE

21. Imposed Operating Limits (hours/year, or gallons fuel/year, etc.):

8,760 Hours/Year

22. Operating Schedule (hours/day, months/year, etc.):

8,760 Hours/Year

DEQ AIR QUALITY PROGRAM
1410 N. Hilton, Boise, ID 83706
For assistance, call the
Air Permit Hotline – 1-877-5PERMIT

Emissions Units - Industrial Engine Information **Form EU1**
Revision 8
1/15/10

Please see instructions on page 2 before filling out the form.

IDENTIFICATION

1. Company Name:	2. Facility Name:	
Nu-West Industries, dba/ Agrium	Rasmussen Valley Mine	
3 Brief Project Description:	Phosphate Mining	

ENGINE (EMISSION UNIT) DESCRIPTION AND SPECIFICATIONS

4. Type of Unit:	☒ New Unit ☐ Unpermitted Existing Unit ☐ Modification to a Unit with Permit #: Date Issued:		
5. Engine Displacement:	3 cylinders each 0.5 (liters per cylinder)	6. Ignition Type:	☒ Compression ☐ Spark
7. Use	☐ Emergency ☒ Non-Emergency		
8. Engine ID Number:	9. Maximum Rated Engine Power:		
Diesel Light Plant 8	_____ Brake Horsepower (bhp)		
10. Construction Date:	11. Manufacturer:	12. Model:	13. Model Year:
2017	Caterpillar	C1.5T (24.7 bhp)	2013
14. Date of Modification (if applicable):	15. Serial Number (if available):	16. Control Device (if any):	
None	N/A	None	

FUEL DESCRIPTION AND SPECIFICATIONS

17. Fuel Type	☒ Diesel Fuel (#2) (gal/hr)	☐ Gasoline Fuel (gal/hr)	☐ Natural Gas (cf/hr)	☐ Other Fuels (unit:)
18. Full Load Consumption Rate	1.48 gal/hr	NA	NA	NA
19. Actual Consumption Rate	1.48 gal/hr	NA	NA	NA
20. Sulfur Content wt%	0.0015 %	N/A	N/A	NA

OPERATING LIMITS & SCHEDULE

21. Imposed Operating Limits (hours/year, or gallons fuel/year, etc.):

8,760 Hours/Year

22. Operating Schedule (hours/day, months/year, etc.):

8,760 Hours/Year

DEQ AIR QUALITY PROGRAM
1410 N. Hilton, Boise, ID 83706
For assistance, call the
Air Permit Hotline – 1-877-5PERMIT

Emissions Units - Industrial Engine Information **Form EU1**
Revision 8
1/15/10

Please see instructions on page 2 before filling out the form.

IDENTIFICATION

1. Company Name:	2. Facility Name:	
Nu-West Industries, dba/ Agrium	Rasmussen Valley Mine	
3 Brief Project Description:	Phosphate Mining	

ENGINE (EMISSION UNIT) DESCRIPTION AND SPECIFICATIONS

4. Type of Unit:	☒ New Unit ☐ Unpermitted Existing Unit ☐ Modification to a Unit with Permit #: Date Issued:		
5. Engine Displacement:	3 cylinders each 0.5 (liters per cylinder)	6. Ignition Type:	☒ Compression ☐ Spark
7. Use	☐ Emergency ☒ Non-Emergency		
8. Engine ID Number:	9. Maximum Rated Engine Power:		
Diesel Light Plant 9	_____ Brake Horsepower (bhp)		
10. Construction Date:	11. Manufacturer:	12. Model:	13. Model Year:
2017	Caterpillar	C1.5T (24.7 bhp)	2013
14. Date of Modification (if applicable):	15. Serial Number (if available):	16. Control Device (if any):	
None	N/A	None	

FUEL DESCRIPTION AND SPECIFICATIONS

17. Fuel Type	☒ Diesel Fuel (#2) (gal/hr)	☐ Gasoline Fuel (gal/hr)	☐ Natural Gas (cf/hr)	☐ Other Fuels (unit:)
18. Full Load Consumption Rate	1.48 gal/hr	NA	NA	NA
19. Actual Consumption Rate	1.48 gal/hr	NA	NA	NA
20. Sulfur Content wt%	0.0015 %	N/A	N/A	NA

OPERATING LIMITS & SCHEDULE

21. Imposed Operating Limits (hours/year, or gallons fuel/year, etc.):

8,760 Hours/Year

22. Operating Schedule (hours/day, months/year, etc.):

8,760 Hours/Year

DEQ AIR QUALITY PROGRAM
1410 N. Hilton, Boise, ID 83706
For assistance, call the
Air Permit Hotline – 1-877-5PERMIT

AIR PERMIT APPLICATION

Revision 6
10/7/09

For each box in the table below, CTRL+click on the blue underlined text for instructions and information.

IDENTIFICATION	
1. Company Name:	2. Facility Name:
Nu-West Industries dba Agrium	Rasmussen Valley Mine.
3. Brief Project Description:	Phosphate Mining

APPLICABILITY DETERMINATION	
4. List applicable subparts of the New Source Performance Standards (NSPS) (40 CFR part 60). Examples of NSPS affected emissions units include internal combustion engines, boilers, turbines, etc. The applicant must thoroughly review the list of affected emissions units.	List of applicable subpart(s): 40 CFR Part 60 Subpart IIII ☐ Not Applicable
5. List applicable subpart(s) of the National Emission Standards for Hazardous Air Pollutants (NESHAP) found in 40 CFR part 61 and 40 CFR part 63. Examples of affected emission units include solvent cleaning operations, industrial cooling towers, paint stripping and miscellaneous surface coating. EPA has a web page dedicated to NESHAP that should be useful to applicants.	List of applicable subpart(s): 40 CFR Part 63 Subpart ZZZZ – Must comply with the requirements of 40 CFR Part 60 Subpart IIII ☐ Not Applicable
6. For each subpart identified above, conduct a complete a regulatory analysis using the instructions and referencing the example provided on the following pages. **Note** - Regulatory reviews must be submitted with sufficient detail so that DEQ can verify applicability and document in legal terms why the regulation applies. Regulatory reviews that are submitted with insufficient detail will be determined incomplete.	☑ A detailed regulatory review is provided (Follow instructions and example). ☐ DEQ has already been provided a detailed regulatory review. Give a reference to the document including the date.

IF YOU ARE UNSURE HOW TO ANSWER ANY OF THESE QUESTIONS, CALL THE AIR PERMIT HOTLINE AT 1-877-5PERMIT

It is emphasized that it is the applicant's responsibility to satisfy all technical and regulatory requirements, and that DEQ will help the applicant understand what those requirements are prior to the application being submitted but that DEQ will not perform the required technical or regulatory analysis on the applicant's behalf.

Regulatory Analysis

Summary

The diesel engines at the Rasmussen Valley Mine (RVM) must comply with 40 CFR Part 63 Subpart ZZZZ. Subpart ZZZZ requires meeting 40 CFR Part 60, Subpart IIII requirements. RVM will have 9 diesel light plants rated at 24.7 hp each, diesel well water pump 1 rated at 113 hp, diesel well water pump 2 rated at 65.7 hp, and diesel ready line generator rated at 107 hp. Installation date for well water pump 1 was 2015, and installation date for all other engines will be 2017. These diesel fuel burning engines are considered non-road engines.

Agrium must purchase engines that are certified by the manufacturer to comply with Subpart IIII requirements. The facility must operate and maintain the engines according to the manufacturer's written instructions or procedures developed by the owner or operator that are approved by the engine manufacturer, over the entire life of the engine. The facility must use ultra-low sulfur content diesel fuel (15 ppm maximum sulfur content or 0.0015% by weight). If the engines are equipped with a diesel particulate filter to comply with the emission standards, the diesel particulate filter must be installed with a backpressure monitor that notifies the owner or operator when the high backpressure limit of the engine is approached.

Applicable Emission Standards for the Diesel Engines at RVM

Tier 3 & 4 Emission Standards—Engines, g/kWh (g/bhp-hr)						
Engine Power	**Engine (hp)**	**CO**	**NMHC**	**NMHC+ NO_x**	**NO_x**	**PM**
TIER 3						
$75 \leq kW < 130$ ($100 \leq hp < 175$)	Well Water Pump 1 (113)	5.0 (3.7)	-	4.0 (3.0)	-	0.3 (0.22)
TIER 4						
$8 \leq kW < 19$ ($11 \leq hp < 25$)	Light plants (24.7)	6.6 (4.9)	-	7.5 (5.6)	-	0.4 (0.3)
$37 \leq kW < 56$ ($50 \leq hp < 75$)	Well Water Pump 2 (65.7)	5.0 (3.7)	-	4.7 (3.5)	-	0.03 (0.022)
$56 \leq kW < 130$ ($75 \leq hp < 175$)	Ready Line Generator (107)	5.0 (3.7)	0.19 (0.14)	-	0.40 (0.30)	0.02 (0.015)

Regulatory Background

§ 60.4200
Am I subject to this subpart?
Installation date for all engines is 2015 or later. Therefore, according to § 60.4200, engines at RVM are subject to 40 CFR Part 60, Subpart IIII. For the purposes of this subpart, the date that construction commences is the date the engine is ordered by the owner or operator.

According to § 60.4200 (a)(4) The provisions of § 60.4208 of this subpart are applicable to all owners and operators of stationary CI ICE that commence construction after July 11, 2005.

§ 60.4204
Emission Standards for Owners and Operators
According to 40 CFR §60.4204(b) Owners and operators of 2007 model year and later non-emergency stationary CI ICE with a displacement of less than 30 liters per cylinder must comply with the emission standards for new CI engines in § 60.4201which is certification by manufacturer of the engines that the engines comply with requirements of this subpart.

§ 60.4206

How long must I meet the emission standards if I am an owner or operator of a stationary CI internal combustion engine?
Owners and operators of stationary CI ICE must operate and maintain stationary CI ICE that achieve the emission standards as required in §§ 60.4204 according to the manufacturer's written instructions or procedures developed by the owner or operator that are approved by the engine manufacturer, over the entire life of the engine.

§ 60.4207
What fuel requirements must I meet if I am an owner or operator of a stationary CI internal combustion engine subject to this subpart?

In accordance with § 60.4207 (b), beginning October 1, 2010, owners and operators of stationary CI ICE subject to this subpart with a displacement of less than 30 liters per cylinder that use diesel fuel must purchase diesel fuel that meets the requirements of 40 CFR 80.510(b) for nonroad diesel fuel.

§ 60.4209
What are the monitoring requirements if I am an owner or operator of a stationary CI internal combustion engine?

If you are an owner or operator, you must meet the monitoring requirements of this section. In addition, you must also meet the monitoring requirements specified in § 60.4211.

§ 60.4209(b) If you are an owner or operator of a stationary CI internal combustion engine equipped with a diesel particulate filter to comply with the emission standards in § 60.4204, the diesel particulate filter must be installed with a backpressure monitor that notifies the owner or operator when the high backpressure limit of the engine is approached.

§ 60.4211

What are my compliance requirements if I am an owner or operator of a stationary CI internal combustion engine?

§ 60.4211(a) – RVM must do all of the following, except as permitted under paragraph (g) of this section:

(1) Operate and maintain the stationary CI internal combustion engine and control device according to the manufacturer's emission-related written instructions;

(2) Change only those emission-related settings that are permitted by the manufacturer; and

(3) Meet the requirements of 40 CFR parts 89, 94 and/or 1068, as they apply to you.

§ 60.4211 (c) – RVM must comply with the emission standards specified in § 60.4204(b) and must comply by purchasing an engine certified to the emission standards in § 60.4204(b), for the same model year and maximum engine power. The engine must be installed and configured according to the manufacturer's emission-related specifications, except as permitted in paragraph (g) of this section.

§ 60.4211(g) – If RVM does not install, configure, operate, and maintain each engine and control device according to the manufacturer's emission-related written instructions, or change emission-related settings in a way that is not permitted by the manufacturer, it must demonstrate compliance as follows:

(1) for the stationary CI internal combustion engine with maximum engine power less than 100 HP, RVM must keep a maintenance plan and records of conducted maintenance to demonstrate compliance and must, to the extent practicable, maintain and operate the engine in a manner consistent with good air pollution control practice for minimizing emissions. In addition, if you do not install and configure the engine and control device according to the manufacturer's emission-related written instructions, or you change the emission-related settings in a way that is not permitted by the manufacturer, you must conduct an initial performance test to demonstrate compliance with the applicable emission standards within 1 year of such action.

(2) for the stationary CI internal combustion engine with maximum engine power greater than 100 HP, RVM must keep a maintenance plan and records of conducted maintenance and must, to the extent practicable, maintain and operate the engine in a manner consistent with good air pollution control practice for minimizing emissions. In addition, you must conduct an initial performance test to demonstrate compliance with the applicable emission standards within 1 year of startup, or within 1 year after an engine and control device is no longer installed, configured, operated, and maintained in accordance with the manufacturer's emission-related written instructions, or within 1 year after you change emission-related settings in a way that is not permitted by the manufacturer.

Appendix B

Anticipated Construction Schedule

Year	Activity Description
2017	Infrastructure Development
2018-2022	Mining
2019-2025	Reclamation

APPENDIX C

Dust Control Plan

This Dust Control Plan identifies the fugitive dust sources at the Rasmussen Valley Mine site and describes all of the dust control measures to be implemented before, during, and after any dust generating activity for the duration of the project.

Dust Control Plan
Section 1 – General Information – Page 1

1-A Project Name and Location

Project Name: Rasmussen Valley Mine

Project Address: 18 miles Northeast of Soda Springs

Physical Address: 3010 Conda Road

City/State/Zip: Soda Springs, Idaho 83276 County: Caribou

Section(s): 4, 5, 6, 8, and 9 Township: 7 S Range: 44 E

Section(s): 34, 35, 36 / 1 Township 6 S / S7 Range: 44 E / 43E

Expected Construction Start Date: 2017 End Date: 2025

1-B Contacts

Names, addresses, and phone numbers of persons and operators responsible for the implementation of the Dust Control Plan and responsible for the dust generating operation.

Mine Manager: Alan Haslam

Address: P.O. Box 758 / 3010 Conda Road

City / State / Zip: Soda Springs, Idaho 83276

Phone: (208) 351-9813 Fax: N/A

Section 1 – General Information – Page 2

Project Name: **Rasmussen Valley Mine**

1-C Contractors

Provide the names, addresses, and phone numbers of the contractors involved in dust generating activities **or** performing dust control as part of this project.

1. Kiewit Mining Group, P.O. Box 919/3826 Blackfoot River Road, Soda Springs, ID 83276
   (208) 547-1097

1-D The following will have the primary responsibility for implementing this Dust Control Plan?

Primary Project Contact: Scott Donahoo

Title: Mine Superintendent

Company Name: Agrium Conda Phosphate Operations (CPO)

Address: P.O. Box 758 / 3010 Conda Road

City / State / Zip: Soda Springs, Idaho 83276

On-Site Phone: 208-574-2080 x 1301 Fax: N/A

Mobile Phone: N/A Pager: N/A

1-E Provide a brief description of the project's operations.

Agrium is proposing to construct and operate an open-pit phosphate mine in the Rasmussen Valley in Caribou County, Idaho. The RVM will develop a large open pit over 9 sequential phases. Storm water and sediment control structures, a facilities area, ore stockpile areas, growth media storage areas, and access and haul roads within the lease will be constructed to support mining operations. The existing and proposed mine pits and supporting areas will be restored dramatically improving the aesthetics of the property. There will be a total of 400 acres of new surface disturbance.

Dust Control Plan
Section 2 – Plot Plan – Page 1

Project Name: **Rasmussen Valley Mine**

2-A Plot Plan

A plot plan or facility layout map identifies the location of the project. Refer to Figure 1-1 for a facility layout map. Attached maps may include tract maps, site maps, and topographic maps. Use the checklist below to make sure all areas have been identified on the facility layout map.

Identify the relative locations of actual and potential sources of fugitive dust emissions.

- ☒ Bulk material handling and storage areas.
- ☒ Paved and unpaved access roads, haul roads, traffic areas, and equipment storage yards.
- ☒ Drilling and Blasting operations
- ☐ Exit points where carryout and trackout onto paved public roads may occur.
- ☒ Water supply locations if water application will be used for controlling visible dust emissions.
- ☒ Freeways, roads, or traffic areas that may be affected by the dust generating activities.

Water for dust suppressant will come from water wells located at the Rasmussen Valley Mine

2-B Facility Map

☒ Figure 1 provides a facility layout map.

Agrium

Figure 1. Rasmussen Valley Mine Layout

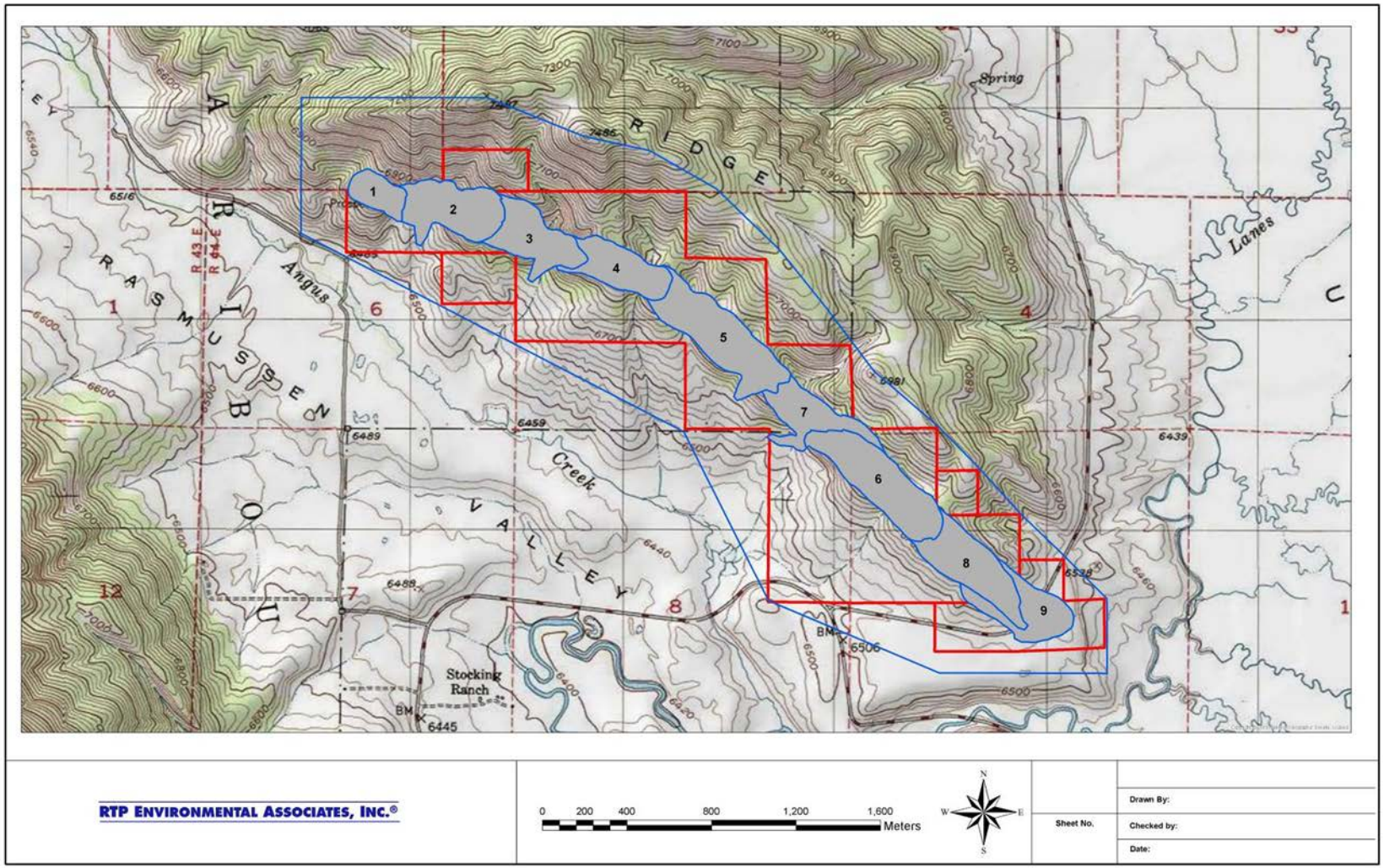

Dust Control Plan
Section 3 – Fugitive Dust Sources – Page 1

Project Name: **Rasmussen Valley Mine**

3-A Disturbed Surface Area

Report the total area of land surface to be disturbed, the daily throughput volume of earthmoving in cubic yards, and the total area in acres of the entire project site.

Total area of existing surface disturbances:	28	Acres
Total area of new surface to be disturbed:	400	Acres
Total throughput volume of earthmoving:	10,530	Cubic Yards
Total area of entire project site:	428	Acres

3-B Dust Generating Activity Dates

The expected start and completion dates of dust generating activities and soil disturbance activities to be performed on site.

Expected start date: 2017 **Completion Date**: 2025

Phase Project Start – A: 2017 (Mining) Completion – A: 2023 (Mining)

Phase Project Start – B: 2023 (Reclamation) Completion – B: 2025 (Reclamation)

3-C Other Locations

Other locations included with this plan that are involved with this project. An example may include listing any site where materials will be imported from or exported to.

☐ No other locations are included with this project. (Skip to 3-D)

Location 1: **Monsanto P4 Pit**

☐ No Dust Control Plan Required Included with this plan ☐ ☒ Included with another plan

Location 2: _____

☐ No Dust Control Plan Required ☐ Included with this plan ☐ Included with another plan

Location 3: _____

☐ No Dust Control Plan Required ☐ Included with this plan ☐ Included with another plan

Section 3 – Fugitive Dust Sources – Page 2

Project Name: Rasmussen Valley Mine

3-D Sources of Fugitive Dust

Procedures to limit visible dust emissions from activities that cause fugitive dust emissions.
Check at least one box under each category.

Pre-Activity.

- ☒ The site will be pre-watered and work will be phased to reduce the amount of disturbed surface area at any one time (Refer to Section 4-A).

Active Operations.

- ☒ Water will be applied to dry areas during leveling, grading, trenching, drilling, and earthmoving activities (Refer to Section 4-A).
- ☒ Dust suppressants may be applied to the disturbed surface areas (Refer to Sections 4-A or 4-B, and 4-C).

Inactive Operations, including after work hours, weekends, and holidays.

- N/A Water or dust suppressants will be applied on disturbed surface areas to form a visible crust, and vehicle access will be restricted to maintain the visible crust. (mine operates 8,760 hours per year)

Temporary stabilization of areas that remains unused for seven or more days.

- ☒ Vehicular access will be restricted and water or dust suppressants will be applied and maintained at all un-vegetated areas (Refer to Section 4-A or 4-B, and 4-C).
- ☒ Vegetation will be established on all previously disturbed growth media areas (Refer to Section 4-C).
- ☐ Gravel will be applied and maintained at all previously disturbed areas (Refer to Section 4-C).
- ☐ Previously disturbed areas will be stabilized by vegetation, compaction … (Refer to Section 4-C).

Unpaved Access and Haul Roads, Traffic and Equipment Storage Areas.

- ☒ Apply water or dust suppressants to unpaved haul and access roads (Complete Section 4-A or 4-B)
- ☒ Post speed limit signs of not more than 35 miles per hour at each entrance. (Refer to Section 4-C)
- ☒ Water or dust suppressants will be applied to vehicle traffic and equipment storage areas (Refer to Section 4-A or 4-B).

Wind Events.

- ☒ Water application equipment will apply water to control fugitive dust during wind events, unless unsafe to do so.

3-E Bulk Materials

Handling of Bulk Materials.

- ☐ Water or dust suppressants will be applied when handling bulk materials.
- ☐ Wind barriers with less than 50 percent porosity will be installed and maintained, and water or dust suppressants will be applied.

Storage of Bulk Materials.

- ☒ Water, or dust suppressants, or re-seeding of stockpiles will be applied.
- ☐ Wind barriers with less than 50 percent porosity will be installed and maintained around the storage piles, and water or dust suppressants will be applied.

On-Site Transporting of Bulk Materials.

- ☒ Vehicle speed will be limited on the work site to 35 mph.
- **N/A** All haul trucks will be loaded such that the freeboard is not less than six inches when transported across any paved public access road.

Off-Site Transporting of Bulk Materials.

- ☐ The following practices will be performed: (Refer to Section 5-B)

3-F Comments

Agrium shall conduct monthly facility-wide inspections of potential sources of fugitive dust emissions, during daylight hours and under normal operating conditions to ensure that the methods used to reasonably control fugitive dust emissions are effective.

Agrium shall maintain records of all fugitive dust complaints received for a minimum period of two years. Agrium shall take appropriate corrective action as expeditiously as practicable after receipt of a valid complaint. The records shall include, at a minimum, the date that each complaint was received and a description of the complaint, Agrium's assessment of the validity of the complaint, any corrective action taken, and the date the corrective was taken. A record of fugitive dust complaints shall be maintained by the mine project manager.

Dust Control Plan
Section 4 – Dust Control Methods – Page 1

Project Name: Rasmussen Valley Mine

4-A Water Application

Water application will be used for limiting visible dust emissions and stabilizing surface areas.
Check and answer everything that applies to this project.

Water Application Equipment:

☐ Sprinklers: Describe the activities that will utilize sprinklers:

Minimum treated area: _____ ☐ Square Feet ☐ Acres
Maximum treated area: _____ ☐ Square Feet ☐ Acres
Minimum water flow rate: _____ Gallons/minute Duration: _____

☒ Water Truck, ☐ Water Trailer, ☐ Water Wagon, ☐ Other:

Describe the activities that will utilize this equipment:
Haul roads, ore, overburden, and growth media stockpiles, and facility areas.

Number of application equipment available: 1 Water Truck

Application equipment capacity: 5,000 gal

Application frequency: Up to 4 Times Per Day

Hours of operation: 12 to 24 hours/day

Water Supply:

X Storage tanks 10,000 & 20,000 gal tanks

☒ Wells Two Rasmussen Valley Sites

☐ Canal, River, Pond, Lake, etc. Describe: _____

Approval granted by the owner or public agency to use their water source for this project.

Owner or Agency: Agrium CPO

Contact: Scott Donahoo (Mine Superintendent) Pho 208-574-2080 x 1301

☐ Other: _____

Section 4 – Dust Control Methods – Page 2

Project Name: **Rasmussen Valley Mine**

4-B Dust Suppressant Products

Complete this section if a dust suppressant product will be used. These materials include, but are not limited to: hygroscopic suppressants (road salts), adhesives, petroleum emulsions, polymer emulsions, and bituminous materials (road oils).

Magnesium chloride will be used for dust suppression on County roads.

Application Area: Haul Roads

Product Name: Magnesium Chloride

Contractor's Name: Dustbu Phone No: 207-789-3878

Application Rate: _____ Gallons of undiluted material per ☐ mile or ☐ acre treated.

Application Frequency: 1 - 2 Applications per ☐ week, ☐ month, ☐ **year**

Application Equipment: 10 wheel truck with spray bar

Number of Application Equipment Available: 1

Application Equipment Capacity: 4400 gallons

Attach each of the following information that fully describes this product. Use the checklist below to make sure all information is submitted with this plan.

- ☐ Product Specifications (MSDS, Product Safety Data Sheet, etc.)
- ☐ Manufacturer's Usage Instructions (method, frequency, and intensity of application)
- ☐ Environmental impacts and approvals or certifications related to the appropriate and safe use for ground application.

Section 4 – Dust Control Methods – Page 3

Project Name: Rasmussen Valley Mine

4-C Other Dust Control Methods

Check below the other types of dust control methods that will be employed at the site.

☒ Physical barriers for restricting unauthorized vehicle access:
☒ Fences ☒ Gates ☒ Signs ☐ Berms ☐ Concrete Barriers
☐ Other: _____

☐ Wind barriers Describe: _____

☒ Posted speed limit signs
☒ Posted at 35 miles per hour, ☐ Posted at ____ miles per hour (less than 15 MPH)

☒ Re-establish vegetation for temporarily stabilizing previously disturbed surfaces.
Explain: Growth media stockpiles will be vegetated

☒ Apply and maintain gravel:
☒ On haul roads ☒ On access roads ☒ At equipment storage yards
☒ At vehicle traffic areas ☐ For temporarily stabilizing previously disturbed areas.
Explain: Facility areas and on-site access and haul roads will be constructed using a gravel base

☐ Apply pavement:
Explain: _____

☐ Other: _____

4-D Contingencies

Contingencies to be implemented if application equipment becomes inoperable, more equipment is needed to effectively control fugitive dust emissions during active and inactive periods, accessibility limitations occur at the water sources, or staff is not available to operate the application equipment. Describe the contingencies that will be in place and when they will be implemented. Provide any additional information below.

In the event that the water truck becomes inoperable, the water truck will either be repaired or another measure of controlling fugitive dust would be utilized as expeditiously as practicable. Mine personnel will be responsible for assisting the mine manager in controlling fugitive dust emissions. Applicable mine personnel will have access to either an electronic or paper copy of the dust control plan.

4-E Record keeping

Records and any other supporting documents for demonstrating compliance must be maintained, but only for those days when a control measure is implemented. IDEQ has developed record keeping forms that may be used for complying with this requirement. Check below:

☒ Records will be maintained using documents and forms developed by IDEQ, or similar.
Fugitive Dust Control Method Log, Weather Log, Self Inspection Checklist

Example - Self-Inspection Checklist: Fugitive Dust Control Method Log

Date	Time	Control Method	Comments
5-09-14	7 AM	Water Truck	All haul roads on facility grounds
5-09-14	7 AM	Water Truck	Entrance of facility/North stock pile area only
5-09-14	7 AM	Water Truck	All haul roads on facility grounds
5-09-14	7 AM	See weather log	All haul roads on facility grounds
5-09-14	7 AM	See weather log	All haul roads on facility grounds

Example - Self-Inspection Checklist: Weather Log

Date	Temperature	Wind Speed/Direction	Amt. of Rainfall	Comments
10-10-14	55 F (high)	5 mph	0.10 inch	Wet, cloudy, cold
10-11-14	50 F (high)	8 mph	0.0 inch	Wet, cloudy, cold
10-12-14	56 F (high)	8 mph	0.05 inch	Wet, cloudy, cold
10-16-14	52 F (high)	7 mph	0.0 inch	Wet, cloudy, cold

Agrium

Dust Control Plan
Section 6 – Certification

Project Name: Rasmussen Valley Mine

6-A Certification

The responsible official, principle operator, or the individual implementing must certify the plan.

I certify that all information contained herein and information submitted in the attachments to these documents are true and correct to the best of my knowledge.

Alan Haslam Print Name		Director of Mining Title
Signature		5/5/2016 Date
(208) 351-9813 Phone Number	N/A Fax Number	N/A Cell Number

Self-Inspection Checklist: Fugitive Dust Control Method Log

Fugitive Dust Source**: Haul Roads**

Date	Time	Control Method	Comments

Self-Inspection Checklist: Fugitive Dust Control Method Log

Fugitive Dust Source**: Ore Stockpile**

Date	Time	Control Method	Comments

Self-Inspection Checklist: Fugitive Dust Control Method Log

Fugitive Dust Source**: North & South Overburden Stockpiles**

Date	Time	Control Method	Comments

Self-Inspection Checklist: Fugitive Dust Control Method Log

Fugitive Dust Source**: Drilling**

Date	Time	Control Method	Comments

Self-Inspection Checklist: Fugitive Dust Control Method Log

Fugitive Dust Source**: Facility Areas**

Date	Time	Control Method	Comments

Self-Inspection Checklist: Weather Log

Date	Temperature	Wind Speed / Direction	Amt. of Rainfall	Comments

Appendix D

Emission Calculations
(Provided on CD)

Reference Document: Brown and Caldwell, April 7, 2014, Data Request for Desktop Air Resources Analysis by ARCADIS for Environmental Impact Statement

950 West Bannock Street, Suite 250
Boise, ID 83702

Phone: 208-389-7700
Fax: 208-389-7750

Technical Memorandum

Prepared for: Nu-West Industries, Inc., doing business as Agrium Conda Phosphate Operations

Project Title: Rasmussen Valley Mine Project

Project No. 145424.003.302

Technical Memorandum

Subject: Data Request for Desktop Air Resources Analysis by ARCADIS for Environmental Impact Statement

Date: April 7, 2014

To: Chris Guedes, Mine Permitting Lead

From: Todd Glindeman, Project Manager, Brown and Caldwell

Prepared by: _____
Kenn Hardin, Scientist III

Reviewed by: _____
Mike Puett, Project Engineer

Limitations:

This document was prepared solely for Nu-West Industries, Inc., dba Agrium in accordance with professional standards at the time the services were performed and in accordance with the contract between Nu-West Industries, Inc., dba Agrium and Brown and Caldwell dated February 7, 2011. This document is governed by the specific scope of work authorized by Nu-West Industries,, Inc. dba Agrium; it is not intended to be relied upon by any other party except for regulatory authorities contemplated by the scope of work. We have relied on information or instructions provided by Nu-West Industries, Inc., dba Agrium and other parties and, unless otherwise expressly indicated, have made no independent investigation as to the validity, completeness, or accuracy of such information.

Data Request for Desktop Air Resources Analysis

ARCADIS, the third-party consultant for the Bureau of Land Management (BLM), has requested information from Nu-West Industries, Inc., doing business as Agrium Conda Phosphate Operations (Agrium), to conduct a desktop analysis of the air resource at the Rasmussen Valley Mine Project (RVMP) and to develop and analyze alternatives for the RVMP Environmental Impact Statement. ARCADIS sent a data request to Agrium on January 8, 2013, requesting that Agrium provide additional information required to complete the analysis of the air resource at the RVMP and proposed operations (Attachment A).The data provided in this technical memorandum was gathered directly from the RVMP Mine and Reclamation Plan, Revision 1 (Mine Plan) (Agrium, 2011) unless otherwise noted in the text. Each section provides a specific request and Agrium's response.

Section 1: Operations

1.1 Days of Operations (hours/day and days/year)

The RVMP would operate 24 hours a day for 365 days a year.

1.2 Drilling Overburden (hours/day)

Under ideal conditions, drilling would occur 24 hours a day for 365 days a year. However, there would likely be times when drilling is caught up with mining activities and may be idle for several days (Agrium, 2013).

1.3 Blasting (square feet per blast, blasts/week, type of explosive, amount of explosive used/blast)

The blasting plan is for one shot per day (seven blasts per week). Common blast hole spacing is 20 feet by 20 feet or 400 square feet per blast. This pattern equals about 14.81 cubic yards per foot (Agrium, 2013).

Ammonium Nitrate (AN) Prill would be used in dry holes; emulsion would be used in wet holes. AN Prill has a specific gravity of 0.8 and weighs 26.6 pounds per foot; therefore, in a 40-foot hole, there would be about 20 feet or 532 pounds of AN Prill. Emulsion has a specific gravity of 1.14 and weighs 26.5 pounds per foot; therefore, in a 40-foot hole, there would be about 20 feet or 530 pounds of emulsion.

1.4 Loading Ore to Haul Trucks (tons/year)

The Mine Plan proposes loading 2,000,000 wet tons per year directly from pit to tipple or to temporary stockpile then to tipple. The worst-case scenario would be loading ore twice, from pit to temporary stockpile then to tipple, and would total 4,000,000 wet tons per year.

1.5 Loading Overburden to Haul Trucks (tons/year)

The worst-case scenario for loading overburden from the pit would be 10,197,000 tons per year. This would occur in the latter part of Phase 4 and all of Phase 6 based on Table 5.3 of the Mine Plan (Agrium, 2011).

1.6 Overburden Replacement Activities, Amount of Overburden Replaced (tons/year) from Stockpile to Pit

The worst-case scenario for overburden replacement activities from stockpile to the pit would be 8,325,843 tons per year. This would occur in the latter part of Phase 5 and all of Phase 6 based on the Mine Plan. Total backfill hauled from stockpiles to pit per phase would be as follows:

- Phase 4: 476,028 tons
- Phase 5: 1,577,894 tons
- Phase 6: 7,323,416 tons

1.7 Number and Size of Ore Stockpiles

According to the Mine Plan, the proposed ore stockpile would total 8.5 acres.

1.8 Number and Size of Overburden Stockpiles

According to the Mine Plan, the overburden stockpiles would total 98.1 acres. There would be three overburden piles: north, south main, and south-south.

1.9 Frequency of Disturbances to Ore and Overburden Stockpiles (number of times/day)

According to the Mine Plan, a total of 9,582,000 loose cubic yards (LCY) of material would be added to the overburden stockpiles over the life of the mine. In order to move this material over the life of the mine, approximately 90 trucks (assuming 78 LCY per truck) per day would be loaded during the worse-case scenario. This is based on an average of all material being stockpiled over the life of the mine.

The worst-case scenario for ore stockpile and transport to the tipple (Section 1.10) would total 4,000,000 wet tons per year of ore. Assuming a 100-ton truck transporting the material, approximately 30 trucks would be loaded per day over the life of the mine.

Assuming the ore and overburden stockpiles would be disturbed two times per truck load and 120 trucks per day (90 for overburden storage and 30 for ore storage/transport), the stockpiles would be disturbed on average 240 times per day.

1.10 Truck Unloading Ore at Tipple Ore Stockpile (tons/year)

The Mine Plan proposes loading 2,000,000 wet tons per year directly from pit to tipple or to the temporary ore stockpile then to tipple. The worst-case scenario would be loading ore twice, from pit to stockpiles then to tipple, and would total 4,000,000 wet tons per year.

1.11 Rail Car Loading Transfer from Stockpile to Train (tons/year)

There would be no transfer from stockpile to train.

1.12 Road Building Activities (linear distance and amount of roadbase)

The Mine Plan states that approximately 4.7 miles of haul road would be constructed and 1,084,000 LCY of non-seleniferous waste would be used for construction.

The county road realignment would be approximately 1.67 miles (8,831 feet) of new road construction and would require approximately 141,296 cubic feet of roadbase.

1.13 Crushing and Screening Activities (number and amount of material)

One screen would operate during the summer months; the target would be 30,000 tons of screened material. No crushing would occur (Agrium, 2013).

Appendix E

Diesel Engine Information

24.7 HP Light Plant Certification

California Environmental Protection Agency Air Resources Board	IHI SHIBAURA MACHINERY CORPORATION	EXECUTIVE ORDER U-R-026-0442 New Off-Road Compression-Ignition Engines

Pursuant to the authority vested in the Air Resources Board by Sections 43013, 43018, 43101, 43102, 43104 and 43105 of the Health and Safety Code; and

Pursuant to the authority vested in the undersigned by Sections 39515 and 39516 of the Health and Safety Code and Executive Order G-14-012;

IT IS ORDERED AND RESOLVED: That the following compression-ignition engine and emission control system produced by the manufacturer are certified as described below for use in off-road equipment. Production engines shall be in all material respects the same as those for which certification is granted.

MODEL YEAR	ENGINE FAMILY	DISPLACEMENT (liters)	FUEL TYPE	USEFUL LIFE (hours)
2016	GH3XL1.49FTV	1.496	Diesel	3000

SPECIAL FEATURES & EMISSION CONTROL SYSTEMS	TYPICAL EQUIPMENT APPLICATION
Indirect Diesel Injection, Turbocharger	Welder

The engine models and codes are attached.

The following are the exhaust certification standards (STD) and certification levels (CERT) for non-methane hydrocarbon (NMHC), oxides of nitrogen (NOx), or non-methane hydrocarbon plus oxides of nitrogen (NMHC+NOx), carbon monoxide (CO), and particulate matter (PM) in grams per kilowatt-hour (g/kw-hr), and the opacity-of-smoke certification standards and certification levels in percent (%) during acceleration (Accel), lugging (Lug), and the peak value from either mode (Peak) for this engine family (Title 13, California Code of Regulations, (13 CCR) Section 2423):

RATED POWER CLASS	EMISSION STANDARD CATEGORY		EXHAUST (g/kw-hr)					OPACITY (%)		
			NMHC	NOx	NMHC+NOx	CO	PM	ACCEL	LUG	PEAK
8≤KW<19	Tier 4 Final	STD	N/A	N/A	7.5	6.6	0.40	20	15	50
		CERT	--	--	5.7	1.3	0.15	4	2	8

BE IT FURTHER RESOLVED: That for the listed engine models, the manufacturer has submitted the information and materials to demonstrate certification compliance with 13 CCR Section 2424 (emission control labels), and 13 CCR Sections 2425 and 2426 (emission control system warranty).

Engines certified under this Executive Order must conform to all applicable California emission regulations.

This Executive Order is only granted to the engine family and model-year listed above. Engines in this family that are produced for any other model-year are not covered by this Executive Order.

Executed at El Monte, California on this 8 day of January 2016.

Annette Hebert, Chief
Emissions Compliance, Automotive Regulations and Science Division

ATTACHMENT 1 OF 1

Engine Model Summary Template

U-R-026-0442

12/22/2015

Engine Family	1.Engine Code	2.Engine Model	3.BHP@RPM (SAE Gross)	4.Fuel Rate: mm/stroke @ peak HP (for diesel only)	5.Fuel Rate: (lbs/hr) @ peak HP (for diesels only)	6.Torque @ RPM (SEA Gross)	7.Fuel Rate: mm/stroke@peak torque	8.Fuel Rate: (lbs/hr)@peak torque	9.Emission Control Device Per SAE J1930
GH3XL1.49FTV	EL25/1800	403F-15T	24.7@1800	34.7	10.3	97.6@1800	34.7	10.3	IFI, TC
GH3XL1.49FTV	EL25/1800	C1.5	24.7@1800	34.7	10.3	97.6@1800	34.7	10.3	IFI, TC

Light Plants 1 - 9
24.7 HP Diesel Engines

To: "Newman, John" < newman.dave@allmand.com>
Cc: Jeff Nantkes < nantkes.jeff@allmand.com>, Raymond Solano < solano.raymond@allmand.com>, Dave Jones < jones.dave@allmand.com>

Dave -

We no longer offer the downward exit exhaust but the C1.5 has two different options and the C1.5T only has one option, here is breakdown for you.

The CAT C1.5 two different exhaust exit options:

- Horizontal exit which is 46" off the ground. This is standard for the Maxi II
- Vertical exit which is 67" off the ground. This is standard for the Mine and Rig Spec machines

The CAT C1.5T has one exhaust option and it is a vertical outlet out the top of the machine. This is due to the orientation of the turbo. The height of this outlet is 74" off the ground.

As for exhaust gas temperatures, CAT publishes the exhaust gas temperature measured at the outlet of the exhaust manifold (at the turbo outlet for the C1.5T) while running at full load. They are:

- C1.5 - 824°F
- C1.5T - 869°F

I attached some pictures of the exhaust systems so you can get a better idea as to what they look like since the C1.5T has a much different exhaust system. One thing to note from the pictures, the C1.5 vertical system has a rain cap and that rain cap is in the process of being replaced by a curved stack. Similar to what the C1.5T stack looks like (minus the ring). I know the change has been made but I do not know if all the old rain caps have been used up yet. If there is anything else I can help with, give me a shout!

Thank you,

Andy Grasz | New Product Development

Allmand Bros., Inc.

308.995.4495 | 800.562.1373

On Wed, Mar 2, 2016 at 5:43 AM, Newman, John < newman.dave@allmand.com> wrote:

Hi Jeff, Andy-

From: Newman, John
To: JoAnne C. Mooney- Canada
Cc: Thomas Emmel; Tad Sparks; Tom Betty- Pocatello ID.; Skinner, Justin; Sweeney_robert_e@cat.com; David Keen
Subject: Fwd: Rob Sweeney info
Date: Wednesday, March 16, 2016 2:18:08 PM

Here is more information.

---------- Forwarded message ----------
From: **Grasz, Andrew** <grasz.andy@allmand.com>
Date: Wednesday, March 16, 2016
Subject: Rob Sweeney info
To: "Newman, John" <newman.dave@allmand.com>
Cc: Dave Jones <jones.dave@allmand.com>

Dave -

C1.5 HP: 18.8
C1.5T HP: 24.7
C1.5 Certificate Sheet #: FH3XL1.49F2C
C1.5T Certificate Sheet #: FH3XL 1.49FTV
C1.5 & C1.5T Stack Diameter: 1.500"
C1.5 Exhaust CFM: 99.6
C1.5T Exhaust CFM: 127.1
C1.5 & C1.5T Total Displacement: 1.496L
C1.5 & C1.5T Number of Cylinders: 3

Thank you,

Andy Grasz | Project Engineer

Allmand Bros., Inc.

308.995.4495 | 800.562.1373

On Wed, Mar 16, 2016 at 12:19 PM, Newman, John <newman.dave@allmand.com> wrote:

> Andy-
>
> Can you help with this info.?
>
> ---------- Forwarded message ----------
> From: **JoAnne Mooney** <jmooney_albatross@bell.net>
> Date: Wednesday, March 16, 2016
> Subject: Rob Sweeney info
> To: sweeney_robert_e@cat.com, TadSparks@wseco.com, TomBetty@wseco.com, John Newman <newman.dave@allmand.com>
> Cc: Thomas Emmel <emmel@rtpenv-nc.com>, David Keen <keen@rtpenv-nc.com>, Justin Skinner <justin.skinner@agrium.com>
>
> Hello Robert, and All
>
> Thanks to everyone for your time and effort to provide the equipment spec information that we so desperately require at this time. As you may know, this information needs to be plugged into an air quality model in order to acquire the environmental permits for our new mine project in Idaho. These permits are tightly bound to specific equipment. Once the permits are secured, then the equipment must be acquired.
>
> We find ourselves in a crunch trying to get the last of the needed equipment spec information in order to complete the air modelling. Below is a table summarizing the last equipment spec information that remains outstanding. Robert, can we prevail upon you to help our air modellers with filling the gaps in the table below? Our air modellers are copied on this email (Tom Emmel and David Keen) if you have any direct questions or need for clarification. Anything that you can do to help close these gaps would be greatly appreciated.
>
> Thanks again for all of your assistance! For Agrium's RV Mine Project,
>
> JoAnne
>
> JoAnne Mooney, Environmental Manager
> Albatross Environmental & Process Consulting Inc.
> (705) 794-3818
>
>> Begin forwarded message:
>>
>> **From:** Thomas Emmel <emmel@rtpenv-nc.com>
>> **Subject: RE: missing info??**
>> **Date:** March 16, 2016 at 11:55:59 AM EDT

DCA70SSJU4i

MQ POWER Series Generator

Ready Line 107
HP Diesel Engine

WhisperWatt™

Prime Rating — 56 kW (70 kVA)

Standby Rating — 62 kW (77 kVA)

3-Phase, 60 Hertz, 0.8 PF

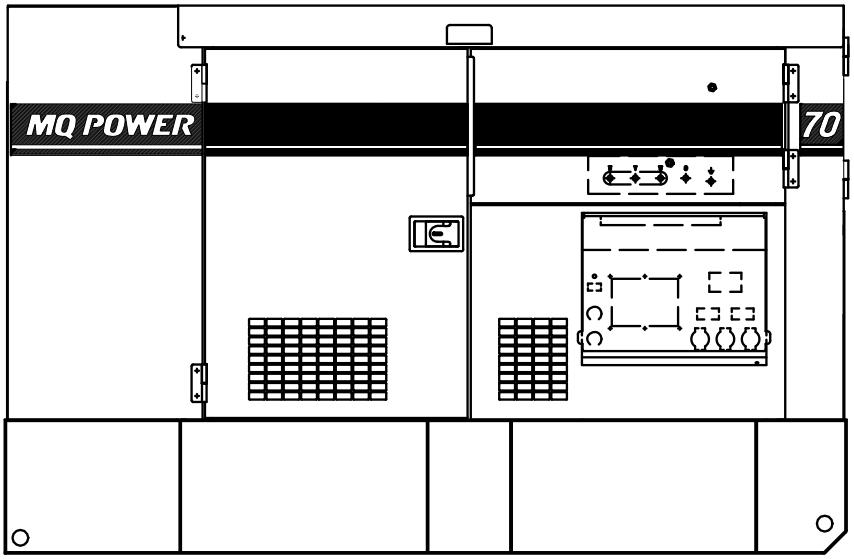

STANDARD FEATURES

- Heavy duty, 4-cycle, direct injection, turbocharged, charge air cooled diesel engine provides maximum reliability.
- Brushless alternator reduces service and maintenance requirements and meets temperature rise standards for Class H insulation systems.
  - Open delta alternator design provides virtually unlimited excitation for maximum motor starting capability.
  - Automatic voltage regulator (AVR) provides precise regulation.
- Electronic governor system maintains frequency to ±0.25%.
- Full load acceptance of standby nameplate rating in one step (NFPA 110, para 5.6.3.1.2).
- Sound attenuated, weather resistant, steel housing provides operation at 65 dB(A) at 23 feet. Fully lockable enclosure allows safe unattended operation.
- Internal fuel tank with direct reading fuel gauges are standard.
- E-coat and powder coat paint provide durability and weather protection.
- Digital engine gauges including oil pressure, water temperature, battery volts, engine speed, and fuel level.
- Analog generator instrumentation including AC ammeter, AC voltmeter, frequency meter, ammeter phase selector switch, voltmeter phase selector switch, and voltage regulator adjustment potentiometer.
- ECU830 microprocessor-based digital generator controller.
  - Remote 2-wire start/stop control.
  - Operational temperature range of -40° to 85° C.
  - High visibility LCD display with heated screen and alphanumeric readout.
  - Modbus interface for gauge panel and expansion options.
  - DPF cleaning cycle indication.
- Automatic safety shutdown system monitors the water temperature, engine oil pressure, low coolant, overspeed, and overcrank. Warning lights indicate abnormal conditions.
- Fully covered power panel. Three-phase terminals and single phase receptacles allow fast and convenient hookup for most applications including temporary power boxes, tools and lighting equipment. All are NEMA standard.
- Fuel/water separator. Removes condensation from fuel for extended engine life.
- Simultaneous single and three phase power.
- EPA emissions certified - Tier 4i emissions compliant.
  - Engine fitted with DOC and DPF.
- Spill Containment - Bunded design protects environment by capturing up to120% of engine fluids.

DCA70SSJU4i

MQ POWER Series Generator

SPECIFICATIONS

Generator Specifications		
Design	Revolving field, self-ventilated Drip-proof, single bearing	
Armature Connection	Star with Neutral	Zig Zag
Phase	3	Single
Standby Output	62 KW (77 KVA)	44 KW
Prime Output	56 KW (70 KVA)	40 KW
3Ø Voltage (L-L/L-N) Voltage Selector Switch at 3Ø 240/139	208Y/120, 220Y/127, 240Y/139	N/A
3Ø Voltage (L-L/L-N) Voltage Selector Switch at 3Ø 480/277	416Y/240, 440Y/254, 480Y/277	N/A
1Ø Voltage (L-L/L-N) (Voltage Selector Switch at 1Ø 240/120)	N/A	240/120
Power Factor	0.8	1.0
Voltage Regulation (No load to full load)	±0.5%	
Generator RPM	1800	
Frequency	60 Hz	
No. of Poles	4	
Excitation	Brushless with AVR	
Frequency	60 Hz	
Frequency Regulation: No Load to Full Load	Isochronous under varying loads from no load to 100% rated load	
Frequency Regulation: Steady State	±0.25% of mean value for constant loads from no load to full load.	
Insulation	Class H	
Sound Level dB(A) Full load at 23 feet	65	

Engine Specifications	
Make / Model	John Deere / 4045HFG92
Emissions	EPA Interim Tier 4 Certified
Starting System	Electric
Design	4-cycle, water cooled, direct injection, turbocharged, charge air cooled and EGR
Displacement	275.0 in^3 (4500 cc)
No. cylinders	4
Bore x Stroke (mm)	106 x 127
Gross Engine Power Output	107 hp (80 kW)
BMEP	168 psi (1161 kPa)
Piston Speed	1500 ft./min. (7.62 m/s)
Compression Ratio	16.1:1
Engine Speed	1800 rpm
Overspeed Limit	2070 rpm
Oil Capacity	3.88 gallons (14.7 liters)
Battery	12V 75Ah x 1

Fuel System		
Recommended Fuel	ASTM-D975-No.1 & No.2-D*	
Maximum Fuel Flow (per hour)	15.9 gallons (60 liters)	
Maximum Inlet Restriction (Hg)	8.9 in. (225 mm)	
Fuel Tank Capacity	103 gallons (390 liters)	
Fuel Consumption	**gph**	**lph**
At full load	4.3	16.2
At 3/4 load	3.4	12.7
At 1/2 load	2.7	10.1
At 1/4 load	2.0	7.4

* - Use ultra-low sulfur diesel fuel.

Cooling System	
Fan Load	4.2 hp (3.1 kW)
Coolant Capacity (with radiator)	5.92 gallons (22.4 liters)
Coolant Flow Rate (per minute)	58 gallons (218 liters)
Heat Rejection to Coolant (per minute)	3068 Btu (3.2 MJ)
Maximum Coolant Friction Head	14.9 psi (103 kPa)
Maximum Coolant Static Head	78.7 feet (24.0 meters)
Ambient Temperature Rating	104°F (40°C)

Air	
Combustion Air	181 cfm (5.1 m^3/min)
Maximum Air Cleaner Restriction	25 in. H_2O (6.25 kPa)
Alternator Cooling Air	526 cfm (14.9 m^3/min)
Radiator Cooling Air	3393 cfm (96.1 m^3/min)
Minimum Air Opening to Room	6.03 ft^2 (0.56 m^2)
Minimum Discharge Opening	3.33 ft^2 (0.31 m^2)

Exhaust System	
Gas Flow (full load)	399 cfm (11.3 m^3/min)
Gas Temperature	835°F (446°C)
Maximum Back Pressure	52 in. H_2O (13 kPa)

Amperage	
Rated Voltage	**Maximum Amps**
1Ø 120 Volt	155.4 Amps (4 wire) 168A x 2 (Zigzag)
1Ø 240 Volt	77.8 Amps (4 wire) 168A (Zigzag)
3Ø 240 Volt	168 Amps
3Ø 480 Volt	84 Amps
Main Line Circuit Breaker Rating	175 Amps
Over Current Relay Trip Set Point 480V Mode Only	84 Amps

WARRANTY*

John Deere Engine

12 months from date of purchase with unlimited hours or 24 months from date of purchase with 2000 hours (whichever comes first).

Generator

24 months from date of purchase or 2000 hours (whichever occurs first).

Trailer

12 months excluding normal wear items.

*Refer to the express written, one-year limited warranty sheet for additional information.

NOTICE

Generator is not intended for use in enclosed areas or where free flow of air is restricted.

Backfeed to a utility system can cause electrocution, shock and/or property damage. **DO NOT** connect to any building's electrical system except through an approved device.

Specifications are subject to change without notice.

DCA70SSJU4i

MQ POWER Series Generator

MQ POWER DECIBEL LEVELS

Our soundproof housing allows substantially lower operating noise levels than competitive designs. WhisperWatts are at home on construction sites, in residential neighborhoods, and at hospitals — just about anywhere.

- 90 — Subway / truck traffic
- 80 — Average city traffic
- 70 — Inside car at 60 mph
- WhisperWatt at 23 feet
- 60 — Air conditioner at 20 feet
- 50 — Normal conversation

65.0 DECIBELS

GENERATOR OUTPUT PANEL

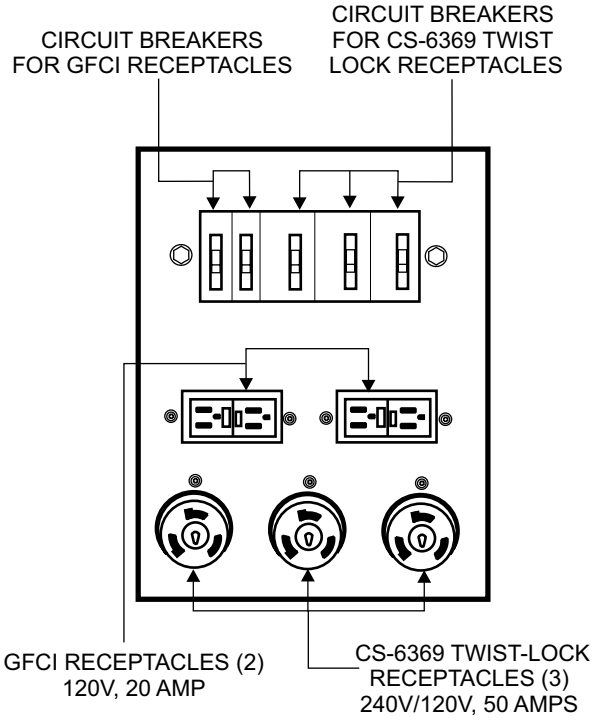

OPTIONAL GENERATOR FEATURES

- **Battery Charger** — provides fully automatic and self-adjusting charging to the generator's battery system.
- **Jacket Water Heater** — for easy starting in cold weather climates.
- **Special Batteries** — long life batteries provide extra engine cranking power.
- **Spring Isolators** — provides extra vibration protection for standby applications.
- **Trailer Mounted Package** — meets National Highway Traffic Safety Administration (NHTSA) regulations. Trailer is equipped with electronic or surge brakes with double or triple axle configuration.

OPTIONAL CONTROL FEATURES

- **Audible Alarm** — alerts operator of abnormal conditions.
- **Emergency Stop Switch** — when manually activated, shuts down generator in the event of an emergency.

OPTIONAL OUTPUT CONNECTIONS

- **Cam-Lok Connectors** — provides quick disconnect alternative to bolt-on connectors.
- **Pin and Sleeve Connectors** — provides industry standard connectors for all voltage requirements.
- **Output Cable** — Available in any custom length and size configuration.

DCA70SSJU4i

MQ POWER Series Generator

DIMENSIONS

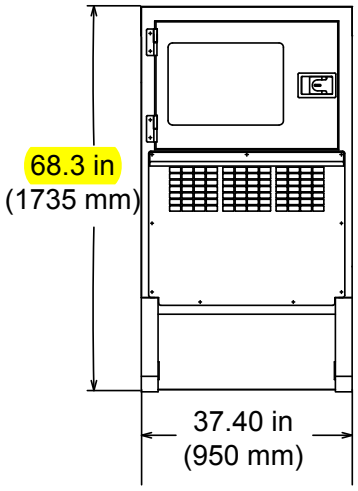

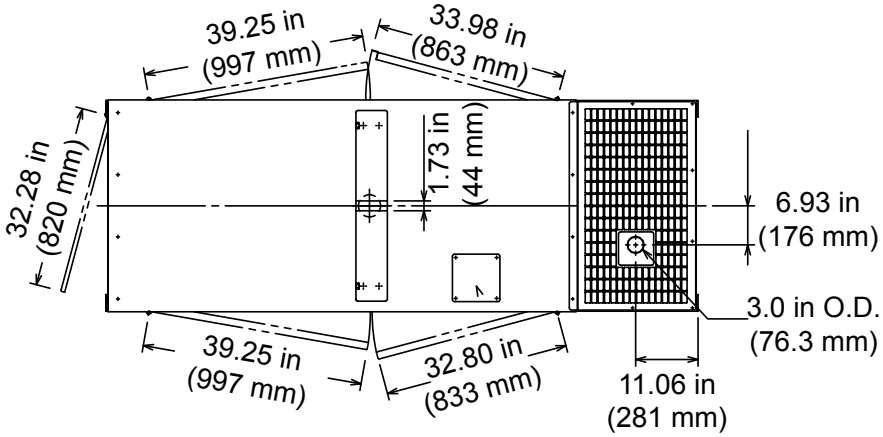

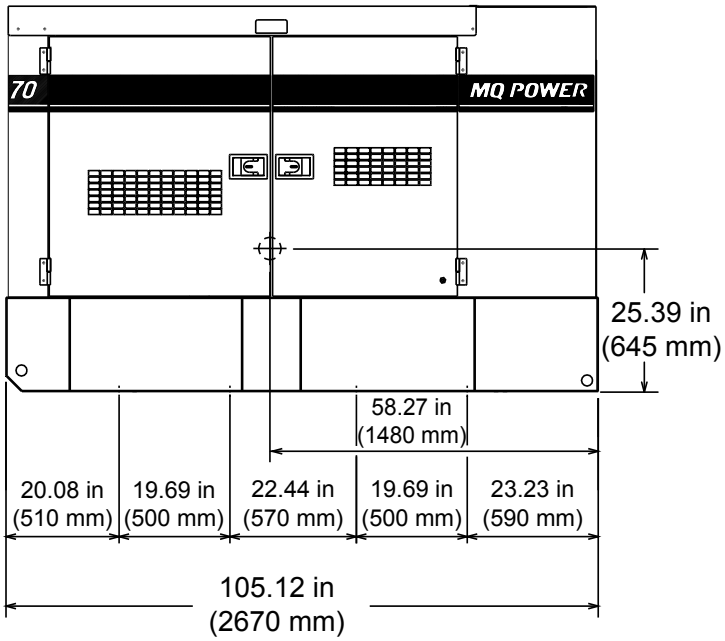

Weight	
Dry Weight	3,594 lbs. (1,630 kg)
Wet Weight	4,410 lbs. (2,000 kg)
Max. Lifting Point Capacity	6,960 lb. (3,157 kg)

Generator can be placed on MQ Power Trailer TRLR70US.

Manufactured by Denyo Co.

Your Multiquip dealer is:

© COPYRIGHT 2013 MULTIQUIP INC.

DCA70SSJU4i Rev. #3 (03/29/13)

MULTIQUIP
POST OFFICE BOX 6254
CARSON, CA 90749
310-537-3700 • 800-883-2551
FAX: 310-604-3831
E-MAIL: sales@multiquip.com
WEBSITE: www.multiquip.com

Existing Dust Suppression Well Pump 113 HP Diesel Engine

DCA85USJ

MQ POWER WhisperWatt™ Series Generator

Prime Rating — 68 kW (85 kVA)

Standby Rating — 75 kW (94 kVA)

60 Hertz

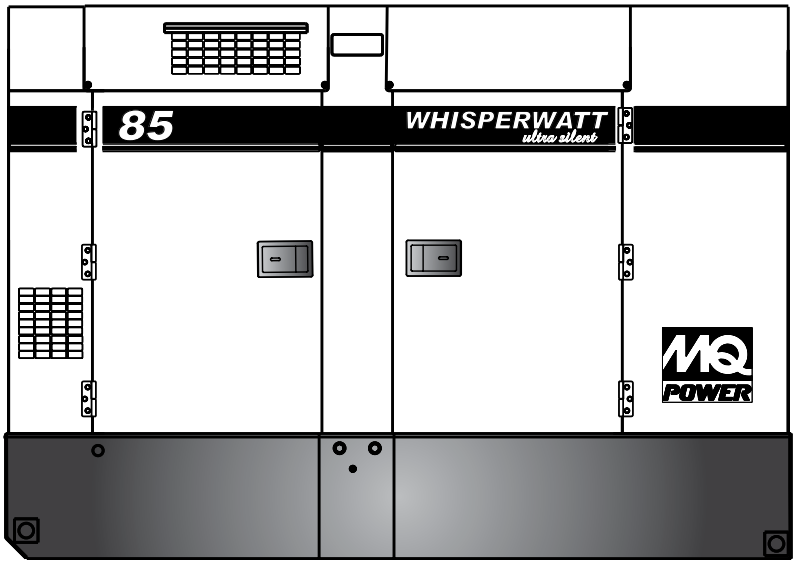

STANDARD FEATURES

- Heavy duty, 4-cycle, direct injection, turbocharged diesel engine provides maximum reliability.
- Brushless alternator reduces service and maintenance requirements and meets temperature rise standards for Class F insulation systems.
- Open delta excitation design provides virtually unlimited excitation for maximum motor starting capability.
- Automatic voltage regulator (AVR) provides precise regulation.
- Electronic Governor Control (Crystal Sync) — maintains frequency to within ±0.25% from no load to full load.
- Full load acceptance of standby nameplate rating in one step (NFPA 110, para 5-13.2.6).
- Sound attenuated, weather resistant, steel housing provides operation at 63 dB(A) at 23 feet. Fully lockable enclosure allows safe unattended operation.
- Internal fuel tank with direct reading of fuel gauge.
- Seven stage powder coat paint system provides durability and weather protection.
- Fuel/water separator removes condensation from fuel for extended engine life. Panel mounted alarm light included.
- Complete engine analog instrumentation includes DC ammeter, oil pressure gauge, water temp. gauge, fuel level gauge, tachometer/hour meter, preheat indicator, and emergency shutdown monitors.
- Complete generator analog instrumentation includes voltage regulator control, ammeter phase selector switch, voltmeter phase selector switch, AC voltmeter, AC ammeter, frequency meter, panel light, and circuit breaker.
- Automatic safety shutdown system monitors the engine oil pressure and coolant temperature. Warning lights indicate abnormal conditions.
- Automatic start/stop control — automatically starts the generator set during a commercial power failure when used in conjunction with a transfer switch.
- Complete power panel. Fully covered; three-phase terminals and single phase receptacles allow fast and convenient hookup for most applications including temporary power boxes, tools and lighting equipment. The GFCI receptacles are NEMA 5-20, and the auxilillary outputs use CS6369 twist-lock receptacles.
- Simultaneous single and three phase power.
- Voltage selector switch offers the operator a wide range of voltages that are manually selectable. Fine tuning of the output voltage can be accomplished by adjusting the voltage regulator control knob to obtain the desired voltage.
- EPA emissions certified - Tier 3 emissions compliant.

DCA85USJ

MQ POWER WhisperWatt™ Series Generator

SPECIFICATIONS

Generator Specifications		
Design	Revolving field, self-ventilated Drip-proof, single bearing	
Armature Connection	Star with Neutral	Zig Zag
Phase	3	Single
Standby Output	75 KW (94 KVA)	66 KW
Prime Output	68 KW (85 KVA)	60 KW
3Ø Voltage (L-L/L-N) Voltage Selector Switch at 3Ø 240/139	208Y/120, 220Y/127, 240Y/139	N/A
3Ø Voltage (L-L/L-N) Voltage Selector Switch at 3Ø 480/277	416Y/240, 440Y/254, 480Y/277	N/A
1Ø Voltage (L-L/L-N) (Voltage Selector Switch at 1Ø 240/120)	N/A	240/120
Power Factor	0.8	1.0
Voltage Regulation (No load to full load)	±0.5%	
Generator RPM	1800	
Frequency	60 Hz	
No. of Poles	4	
Excitation	Brushless with AVR	
Frequency	60 Hz	
Frequency Regulation: No Load to Full Load	3~5% under varying loads from no load to 100% rated load	
Frequency Regulation: Steady State	±0.5% of mean value for constant loads from no load to full load.	
Insulation	Class F	
Sound Level dB(A) Full load at 23 feet	63	

Engine Specifications	
Make / Model	John Deere / 4045HF285
Emissions	EPA Tier 3 Certified
Starting System	Electric
Design	4-cycle, water cooled, direct injection turbocharged
Displacement	274.6 in^3 (4500 cc)
No. cylinders	4
Bore x Stroke (mm)	106 x 127
Gross Engine Power Output	113.0 bhp (84.3 kWm)
BMEP	162 psi (1119 kPa)
Piston Speed	1500 ft./min. (7.62 m/s)
Compression Ratio	17:1
Engine Speed	1800 rpm
Overspeed Limit	2100 rpm
Oil Capacity	3.49 gallons (13.2 liters)
Battery	12V 72Ah x 1

Fuel System		
Recommended Fuel	ASTM-D975-No.1 & No.2-D	
Maximum Fuel Flow (per hour)	15.9 gallons (60 liters)	
Maximum Inlet Restriction (Hg)	5.9 in. (150 mm)	
Fuel Tank Capacity	126 gallons (150 liters)	
Fuel Consumption	**gph**	**lph**
At full load	5.3	20.1
At 3/4 load	4.3	16.2
At 1/2 load	3.1	11.9
At 1/4 load	2.0	7.6

Cooling System	
Fan Load	1.6 hp (1.2 kW)
Coolant Capacity (with radiator)	3.70 gallons (14.0 liters)
Coolant Flow Rate (per minute)	38 gallons (144 liters)
Heat Rejection to Coolant (per minute)	3300 Btu (3.5 MJ)
Heat Rejection to Room (per minute)	582 Btu (0.614 MJ)
Maximum Coolant Friction Head	4.0 psi (27.6 kPa)
Maximum Coolant Static Head	32 feet (9.8 meters)
Ambient Temperature Rating	104°F (40°C)

Air	
Combustion Air	226 cfm (6.4 m^3/min)
Maximum Air Cleaner Restriction	25 in. H_2O (6.25 kPa)
Alternator Cooling Air	911 cfm (45 m^3/min)
Radiator Cooling Air	1589 cfm (30 m^3/min)
Minimum Air Opening to Room	7.85 sq. ft. (0.73 sq. m)
Minimum DischargeOpening	3.87 sq. ft. (0.36 sq. m)

Exhaust System	
Gas Flow (full load)	674 cfm (19.1 m^3/min)
Gas Temperature	1094°F (590°C)
Maximum Back Pressure	30.0 in. H_2O (7.5 kPa)

Amperage	
Rated Voltage	**Maximum Amps**
1Ø 120 Volt	188.9Amps (4 wire) 250A x 2 (Zigzag)
1Ø 240 Volt	94.4Amps (4 wire) 250A (Zigzag)
3Ø 240 Volt	204 Amps
3Ø 480 Volt	102 Amps
Main Line Circuit Breaker Rating	250 Amps
Over Current Relay Trip Set Point 480V Mode Only	102 Amps

WARRANTY*

John Deere

12 months from date of purchase with unlimited hours or 24 months from date of purchase with 2000 hours (whichever comes first).

Generator

24 months from date of purchase or 2000 hours (whichever occurs first).

Trailer

12 months excluding normal wear items.

*Refer to the express written, one-year limited warranty sheet for additional information

NOTICE

Generator is not intended for use in enclosed areas or where free flow of air is restricted.

Backfeed to a utility system can cause electrocution, shock and/or property damage. **DO NOT** connect to any building's electrical system except through an approved device.

Specifications are subject to change without notice.

DCA85USJ

MQ POWER WhisperWatt™ Series Generator

MQ POWER DECIBEL LEVELS

Our soundproof housing allows substantially lower operating noise levels than competitive designs. WhisperWatts are at home on construction sites, in residential neighborhoods, and at hospitals — just about anywhere.

- 90 — Subway / truck traffic
- 80 — Average city traffic
- WhisperWatt at 23 feet
- 70 — Inside car at 60 mph
- 60 — Air conditioner at 20 feet
- 50 — Normal conversation

63.0 DECIBELS

ULTRA-SILENT FEATURES

- **Low Noise Muffler** — Large capacity low noise muffler minimizes exhaust sound.
- **Soundproof Casing** — The new design divides the cabinet into three sections, separating the engine, muffler and radiator for more efficient cooling and reduces noise from the engine and fans.
- **New Cooling System** — An advanced design uses two separate air intake systems to cool the generator. The engine fan draws air in to cool the engine and generator housing while a second electric fan directly cools the radiator. With less air being drawn into the generator through each fan, considerably less noise is produced through the top of the generator.
- **Environmental Design** — Constructed using an integrated environmental skid and fuel tank. This design fully contains fuel leakage and any liquid that might leak from the engine such as lube oil or radiator coolant. All potentially hazardous liquids are contained without contaminating the surrounding area.

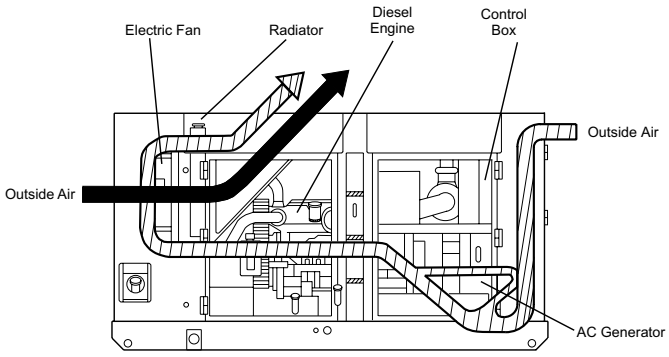

Flow of Cooling Air

GENERATOR OUTPUT PANEL

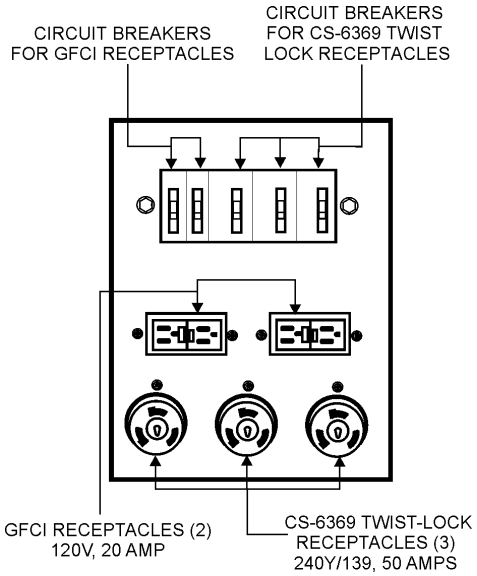

OPTIONAL CONTROL FEATURES

- **Emergency Stop Switch** — when manually activated shuts down generator in the event of an emergency.
- **Audible alarm** — alerts operator of abnormal conditions.

OPTIONAL GENERATOR FEATURES

- **Electronic Governor Control (Crystal Sync)** — maintains frequency to within ±0.25% from no load to full load.
- **Battery Charger** — provides fully automatic and self-adjusting charging to the generator's battery system.
- **Jacket Water Heater** — for easy starting in cold weather climates.
- **Special Batteries** — long life batteries provide extra engine cranking power.
- **Spring Isolaters** — provides extra vibration protection for standby applications.
- **Low Coolant Level Shutdown** — provides protection from critically low coolant levels. Includes control panel warning light.
- **Trailer Mounted Package** — meets National Highway Traffic Safety Administration (NHTSA) regulations. Trailer is equipped with electronic or surge brakes with tandem axle configuration.

OPTIONAL OUTPUT CONNECTIONS

- **Cam-Lock Connectors** — provides quick disconnect alternative to bolt-on connectors.
- **Pin and Sleeve Connectors** — provides industry standard connectors for all voltage requirements.
- **Output Cable** — available in any custom length and size configuration.

DCA85USJ

MQ POWER WhisperWatt™ Series Generator

DIMENSIONS

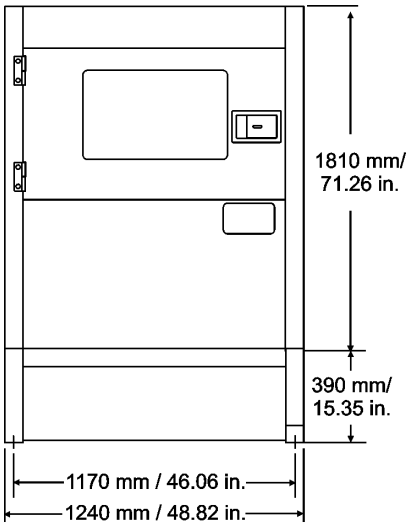

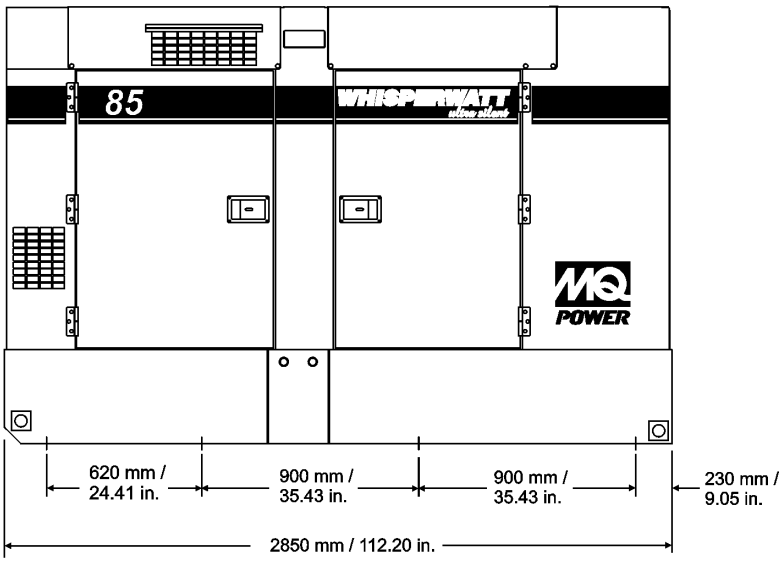

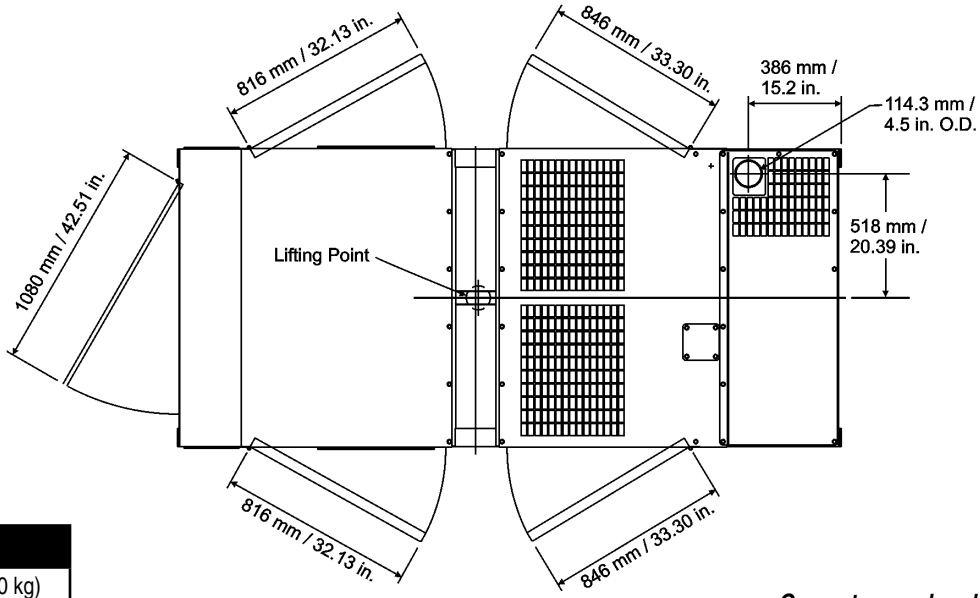

Weight	
Dry Weight	5,094 lbs. (2,310 kg)
Wet Weight	6,048 lbs. (2,743 kg)
Max. Lifting Point Capacity	14,050 lbs. (6,370 kg)

Generator can be placed on a MQ Power Model TRLR85US Tandem Axle Trailer

Manufactured by Denyo Co.

Your Multiquip dealer is:

MULTIQUIP
POST OFFICE BOX 6254
CARSON, CA 90749
310-537-3700 • 800-883-2551
FAX: 310-604-3831
E-MAIL: sales@multiquip.com
WEBSITE: www.multiquip.com

© COPYRIGHT 2010 MULTIQUIP INC.

DCA85USJ2 Rev. #10 (12/16/10)

New Dust Suppression Well Pump
65.7 HP Diesel Engine

DCA45SSIU4F

MQ POWER Series Generator

WhisperWatt™

Prime Rating — 36 kW (45 kVA)

Standby Rating — 40 kW (50 kVA)

Three-Phase, 60 Hertz, 0.8 PF

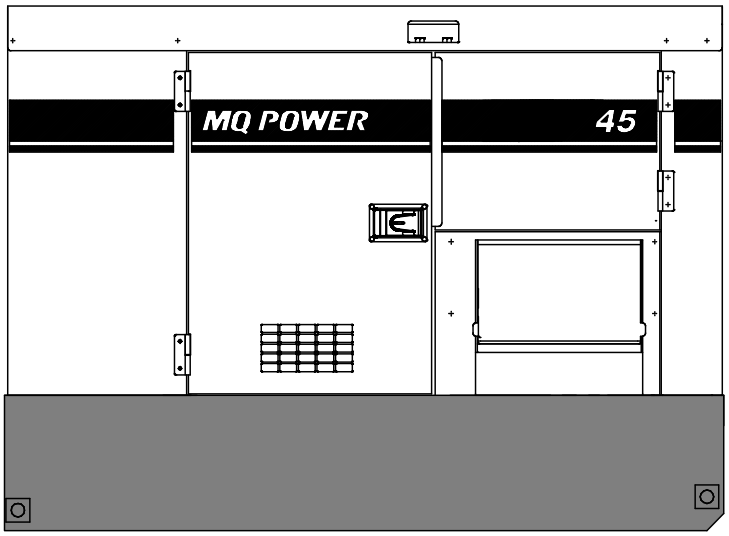

STANDARD FEATURES

- Heavy duty, 4-cycle, direct injection, turbocharged, charge air cooled diesel engine provides maximum reliability.
- Brushless alternator reduces service and maintenance requirements and meets temperature rise standards for Class H insulation systems.
  - Open delta excitation design provides virtually unlimited excitation for maximum motor starting capability.
  - Automatic voltage regulator (AVR) provides precise regulation.
- Electronic Governor Control — isochronous control, maintains frequency to within ±0.25% from no load to full load.
- Full load acceptance of standby nameplate rating in one step (NFPA 110, para 5-13.2.6).
- Sound attenuated, weather resistant, steel housing provides operation at 66 dB(A) at 23 feet. Fully lockable enclosure allows safe unattended operation.
- Internal fuel tank with direct reading of fuel gauge.
- E-coat and powder coat paint provides durability and weather protection.
- Fuel/water separator removes condensation from fuel for extended engine life. Panel mounted alarm light included.
- Complete engine analog instrumentation includes DC ammeter, oil pressure gauge, water temp. gauge, fuel level gauge, tachometer/hour meter, preheat indicator, and emergency shutdown monitors.
- ECU750 — automatic CANBUS engine control with LED status indicator lights.
- Automatic start/stop control — automatically starts the generator set during a commercial power failure when used in conjunction with a transfer switch.
- Complete generator analog instrumentation includes voltage regulator control, ammeter phase selector switch, voltmeter phase selector switch, AC voltmeter, AC ammeter, frequency meter, panel light, and circuit breaker.
- Automatic safety shutdown system monitors the water temperature, engine oil pressure, overspeed and overcrank. Warning lights indicate abnormal conditions.
- Complete power panel. Fully covered; three-phase terminals and single phase receptacles allow fast and convenient hookup for most applications including temporary power boxes, tools and lighting equipment. The GFCI receptacles are NEMA 5-20, and the auxiliary outputs use CS6369 twist-lock receptacles.
- Voltage selector switch offers the operator a wide range of voltages that are manually selectable. Fine tuning of the output voltage can be accomplished by adjusting the voltage regulator control knob to obtain the desired voltage.
- EPA emissions certified — Tier 4 final emissions compliant.
- Spill containment — Bunded design protects environment by capturing up to 119% of engine fluids.

DCA45SSIU4F

MQ POWER Series Generator

SPECIFICATIONS

Generator Specifications		
Design	Revolving field, self-ventilated Drip-proof, single bearing	
Armature Connection	Star with Neutral	Zig Zag
Phase	3	Single
Standby Output	40 KW (50 KVA)	28.8 KW
Prime Output	36 KW (45 KVA)	26 KW
3Ø Voltage (L-L/L-N) Voltage Selector Switch at 3Ø 240/139	208Y/120, 220Y/127, 240Y/139	N/A
3Ø Voltage (L-L/L-N) Voltage Selector Switch at 3Ø 480/277	416Y/240, 440Y/254, 480Y/277	N/A
1Ø Voltage (L-L/L-N) (Voltage Selector Switch at 1Ø 240/120)	N/A	240/120
Power Factor	0.8	1.0
Voltage Regulation (No load to full load)	±0.5%	
Generator RPM	1800	
Frequency	60 Hz	
No. of Poles	4	
Excitation	Brushless with AVR	
Frequency Regulation: No Load to Full Load	Isochronous under varying loads from no load to 100% rated load	
Frequency Regulation: Steady State	±0.25% of mean value for constant loads from no load to full load.	
Insulation	Class H	
Sound Level dB(A) Full load at 23 feet	66	

Engine Specifications	
Make / Model	Isuzu / 4LE2X
Emissions	EPA Tier 4 Final Certified
Starting System	Electric
Design	4-cycle, water cooled, direct injection, turbocharged, charge air cooled and EGR
Displacement	133.0 in^3 (2179 cc)
No. cylinders	4
Bore x Stroke (mm)	85 x 96
Gross Engine Power Output	65.7 hp (49 kW)
BMEP	217 psi (1499 kPa)
Piston Speed	1133.9 ft./min. (5.76 m/s)
Compression Ratio	17.6:1
Engine Speed	1800 rpm
Overspeed Limit	2070 rpm
Oil Capacity	3.2 gallons (12.2 liters)
Battery	12V 72Ah x 1

Fuel System		
Recommended Fuel	ASTM-D975-No.1 & No.2-D	
Maximum Fuel Flow (per hour)	3.4 gallons (13 liters)	
Maximum Inlet Restriction (Hg)	11 in. (280 mm)	
Fuel Tank Capacity	79.2 gallons (300 liters)	
Fuel Consumption	**gph**	**lph**
At full load	2.93	11.1
At 3/4 load	2.20	8.31
At 1/2 load	1.60	6.04
At 1/4 load	1.04	3.92

Cooling System	
Fan Load	2.01 hp (1.5 kW)
Coolant Capacity (with radiator)	4.44 gallons (16.8 liters)
Coolant Flow Rate (per minute)	16.9 gallons (64.2 liters)
Heat Rejection to Coolant (per minute)	1934 Btu (2.04 MJ)
Maximum Coolant Friction Head	14.5 psi (100 kPa)
Maximum Coolant Static Head	3.35 feet (1.04 meters)
Ambient Temperature Rating	104°F (40°C)

Air	
Combustion Air	174 cfm (4.94 m^3/min)
Maximum Air Cleaner Restriction	25 in. H_2O (6.23 kPa)
Alternator Cooling Air	526 cfm (14.9 m^3/min)
Radiator Cooling Air	1900 cfm (53.8 m^3/min)
Minimum Air Opening to Room	3.5 ft^2 (0.33 m^2)
Minimum Discharge Opening	2.27 ft^2 (0.21 m^2)

Exhaust System	
Gas Flow (full load)	237 cfm (6.7 m^3/min)
Gas Temperature	1078°F (581°C)
Maximum Back Pressure	38.1 in. H_2O (9.5 kPa)

Amperage	
Rated Voltage	**Maximum Amps**
1Ø 120 Volt	100 Amps (4 wire),108A x 2 (Zigzag)
1Ø 240 Volt	50 Amps (4 wire),108A (Zigzag
3Ø 240 Volt	108 Amps
3Ø 480 Volt	54 Amps
Main Line Circuit Breaker Rating	125 Amps
Over Current Relay Trip Set Point 480V Mode Only	54 Amps

WARRANTY*

Isuzu Engine

12 months from date of purchase with unlimited hours or 24 months from date of purchase with 2000 hours (whichever comes first).

Generator

24 months from date of purchase or 2000 hours (whichever occurs first).

Trailer

12 months excluding normal wear items.

*Refer to the express written, one-year limited warranty sheet for additional information.

NOTICE

Generator is not intended for use in enclosed areas or where free flow of air is restricted.

Backfeed to a utility system can cause electrocution, shock and/or property damage. **DO NOT** connect to any building's electrical system except through an approved device.

Specifications are subject to change without notice.

DCA45SSIU4F

MQ POWER Series Generator

MQ POWER DECIBEL LEVELS

Our soundproof housing allows substantially lower operating noise levels than competitive designs. WhisperWatts are at home on construction sites, in residential neighborhoods, and at hospitals — just about anywhere.

- 90 — Subway / truck traffic
- 80 — Average city traffic
- 70 — Inside car at 60 mph
- — WhisperWatt at 23 feet
- 60 — Air conditioner at 20 feet
- 50 — Normal conversation

66.0 DECIBELS

GENERATOR OUTPUT PANEL

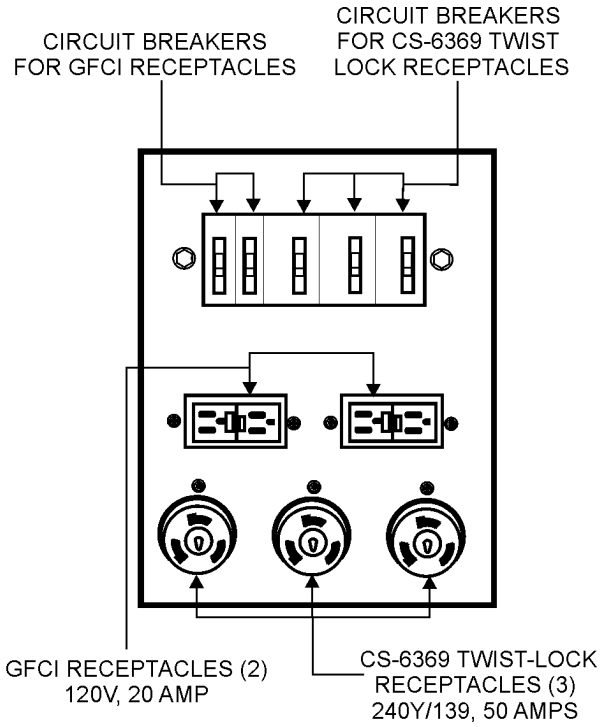

OPTIONAL GENERATOR FEATURES

- **Battery Charger** — provides fully automatic and self-adjusting charging to the generator's battery system.
- **Jacket Water Heater** — for easy starting in cold weather climates.
- **Special Batteries** — long life batteries provide extra engine cranking power.
- **Low Coolant Level Shutdown —** provides protection from critically low coolant levels. Includes control panel warning light.
- **Spring Isolators** — provides extra vibration protection for standby applications.
- **Trailer Mounted Package** — meets National Highway Traffic Safety Administration (NHTSA) regulations. Trailer is equipped with electronic or surge brakes with double or triple axle configuration.

OPTIONAL CONTROL FEATURES

- **Emergency Stop Switch** — when manually activated shuts down generator in the event of an emergency.
- **Audible alarm** — alerts operator of abnormal conditions

OPTIONAL OUTPUT CONNECTIONS

- **Cam-Lok Connectors** — provides quick disconnect alternative to bolt-on connectors.
- **Pin and Sleeve Connectors** — provides industry standard connectors for all voltage requirements.
- **Output Cable** — available in any custom length and size configuration.

DCA45SSIU4F

MQ POWER Series Generator

DIMENSIONS

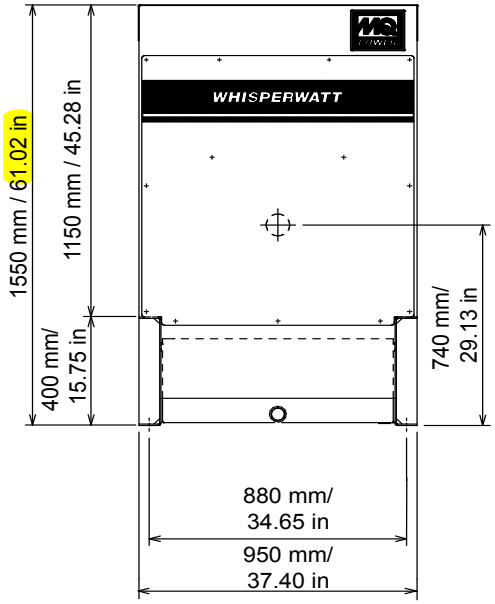

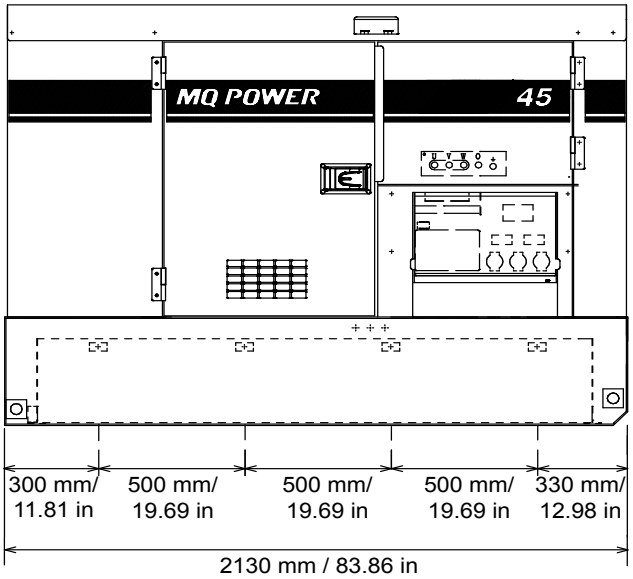

Weight	
Dry Weight	2,337 lbs. (1,060 kg)
Wet Weight	2,976 lbs. (1,350 kg)
Max. Lifting Point Capacity	5,150 lbs. (2,335 kg)

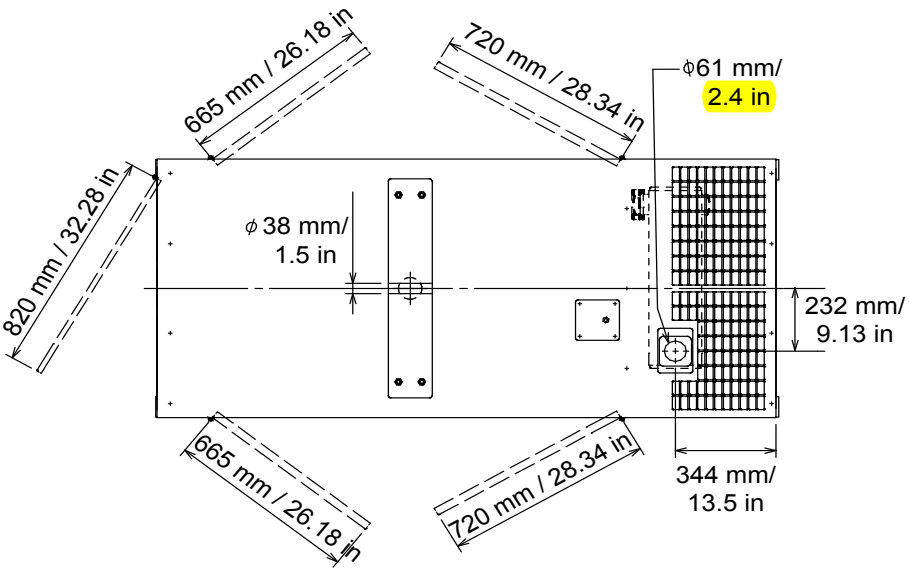

Generator can be placed on MQ Power Model TRLR45 Trailer.

Manufactured by Denyo Co.

Your Multiquip dealer is:

MULTIQUIP
POST OFFICE BOX 6254
CARSON, CA 90749
310-537-3700 • 800-883-2551
FAX: 310-604-3831
E-MAIL: sales@multiquip.com
WEBSITE: www.multiquip.com

© COPYRIGHT 2013 MULTIQUIP INC.

DCA45SSIU4F Rev. #2 (10/14/13)

Appendix F

EPA Non-Road Engine Emission Limits Applicable to RVM

Tier 3 & 4 Emission Standards—Engines, g/kWh (g/bhp-hr)						
Engine Power	**Engine (hp)**	**CO**	**NMHC**	**NMHC+ NO_x**	**NO_x**	**PM**
TIER 3						
75 ≤ kW < 130 (100 ≤ hp < 175) After 2006 before 2012	Well Water Pump 1 (113)	5.0 (3.7)	-	4.0 (3.0)	-	0.3 (0.22)
TIER 4						
8 ≤ kW < 19 (11 ≤ hp < 25) After 2007	Light plants (24.7)	6.6 (4.9)	-	7.5 (5.6)	-	0.4 (0.3)
37 ≤ kW < 56 (50 ≤ hp < 75) After 2012	Well Water Pump 2 (65.7)	5.0 (3.7)	-	4.7 (3.5)	-	0.03 (0.022)
56 ≤ kW < 130 (75 ≤ hp < 175) After 2012-2014	Ready Line Generator (107)	5.0 (3.7)	0.19 (0.14)	-	0.40 (0.30)	0.02 (0.015)

Appendix G

Air Dispersion Modeling Inputs, Summary Results and Supporting Information (Modeling Files Provided on CD)

Appendix G (Modeling Inputs)

Agrium - Rasmussen Valley Mine (RVM) Point Source Model Input (NAD83, Z12)- 4/18/16

Source ID	Source Description	Easting (m)	Northing (m)	Base Elevation (m)	Stack Height (ft)	Temp. (°F)	Exit Velocity (ft/sec)	Stack Diameter (ft)	PM10 (lb/hr)	PM25 (lb/hr)	NO2 (lb/hr)
LP_1_P2	Diesel light plant Phase 2	470933.24	4743772.20	2065.16	6.17	869.0	172.705	0.13	0.016	0.016	0.304
LP_2_P2	Diesel light plant Phase 2	471093.61	4743822.38	2090.06	6.17	869.0	172.705	0.13	0.016	0.016	0.304
LP_3_P2	Diesel light plant Phase 2	471235.84	4743789.94	2098.12	6.17	869.0	172.705	0.13	0.016	0.016	0.304
LP_4_P2	Diesel light plant Phase 2	471331.90	4743738.79	2107.80	6.17	869.0	172.705	0.13	0.016	0.016	0.304
LP_5_P2	Diesel light plant Phase 2	471264.53	4743605.30	2079.17	6.17	869.0	172.705	0.13	0.016	0.016	0.304
LP_6_P2	Diesel light plant Phase 2	471170.96	4743620.27	2072.44	6.17	869.0	172.705	0.13	0.016	0.016	0.304
LP_7_P2	Diesel light plant Phase 2	471126.05	4743646.47	2055.33	6.17	869.0	172.705	0.13	0.016	0.016	0.304
LP_8_P2	Diesel light plant Phase 2	471021.25	4743682.65	2042.22	6.17	869.0	172.705	0.13	0.016	0.016	0.304
LP_9_P2	Diesel light plant Phase 2	471203.08	4743469.08	2026.51	6.17	869.0	172.705	0.13	0.016	0.016	0.304
GEN_1_P2	Mine Pit Equipment Generator Phase 2	471121.40	4743731.70	2053.52	7.61	835.0	135.541	0.25	0.004	0.004	0.070
LP_1_P5	Diesel light plant Phase 5	472213.31	4743311.79	2090.47	6.17	869.0	172.705	0.13	0.016	0.016	0.304
LP_2_P5	Diesel light plant Phase 5	472349.31	4743261.25	2092.29	6.17	869.0	172.705	0.13	0.016	0.016	0.304
LP_3_P5	Diesel light plant Phase 5	472588.85	4743038.97	2079.74	6.17	869.0	172.705	0.13	0.016	0.016	0.304
LP_4_P5	Diesel light plant Phase 5	472614.75	4742885.75	2069.57	6.17	869.0	172.705	0.13	0.016	0.016	0.304
LP_5_P5	Diesel light plant Phase 5	472517.64	4742937.55	2046.33	6.17	869.0	172.705	0.13	0.016	0.016	0.304
LP_6_P5	Diesel light plant Phase 5	472478.79	4742985.02	2064.15	6.17	869.0	172.705	0.13	0.016	0.016	0.304
LP_7_P5	Diesel light plant Phase 5	472350.08	4743045.25	2058.00	6.17	869.0	172.705	0.13	0.016	0.016	0.304
LP_8_P5	Diesel light plant Phase 5	472252.20	4743144.72	2047.67	6.17	869.0	172.705	0.13	0.016	0.016	0.304
LP_9_P5	Diesel light plant Phase 5	471705.30	4743293.54	2043.47	6.17	869.0	172.705	0.13	0.016	0.016	0.304
GEN_1_P5	Mine Pit Equipment Generator Phase 5	472381.68	4743138.24	2083.71	7.61	835.0	135.541	0.25	0.004	0.004	0.070
LP_1_P8	Diesel light plant Phase 8	473434.17	4742199.07	2072.74	6.17	869.0	172.705	0.13	0.016	0.016	0.304
LP_2_P8	Diesel light plant Phase 8	473520.11	4742203.68	2072.53	6.17	869.0	172.705	0.13	0.016	0.016	0.304
LP_3_P8	Diesel light plant Phase 8	473628.01	4742108.68	2064.57	6.17	869.0	172.705	0.13	0.016	0.016	0.304
LP_4_P8	Diesel light plant Phase 8	473719.48	4741904.62	2041.33	6.17	869.0	172.705	0.13	0.016	0.016	0.304
LP_5_P8	Diesel light plant Phase 8	473606.90	4741925.73	2040.01	6.17	869.0	172.705	0.13	0.016	0.016	0.304
LP_6_P8	Diesel light plant Phase 8	473504.73	4741982.15	2038.90	6.17	869.0	172.705	0.13	0.016	0.016	0.304
LP_7_P8	Diesel light plant Phase 8	473458.44	4742013.96	2038.99	6.17	869.0	172.705	0.13	0.016	0.016	0.304
LP_8_P8	Diesel light plant Phase 8	473388.47	4742077.31	2042.21	6.17	869.0	172.705	0.13	0.016	0.016	0.304
LP_9_P8	Diesel light plant Phase 8	473078.08	4742202.22	2011.98	6.17	869.0	172.705	0.13	0.016	0.016	0.304
GEN_1_P8	Mine Pit Equipment Generator Phase 8	473524.14	4742086.33	2063.64	7.61	835.0	135.541	0.25	0.004	0.004	0.070
WEL_PMP1	Existing Dust Suppression Well	473986.71	4741917.37	1999.17	9.05	1094.0	101.760	0.38	0.056	0.056	0.742
WEL_PMP2	New Dust Suppression Well	471760.95	4743695.46	2152.99	5.15	1078.0	125.796	0.20	0.003	0.003	0.507
								Total Point Source Emissions per Phase:	**0.208**	**0.208**	**4.054**

Note: Toxic Air Pollutants from diesel engines are exempt from evaluation per IDAPA §210(20).

Agrium - Rasmussen Valley Volume Source Input

Source ID	Source Description	Easting (m)	Northing (m)	Base Elevation (m)	Release Height (ft)	Horizontal Dimension (ft)	Vertical Dimension (ft)	PM10 (lb/hr)	PM25 (lb/hr)	NO2 (lb/hr)	Al (lb/hr)	As (lb/hr)	Cd (lb/hr)	Fe (lb/hr)	Ni (lb/hr)
P2R_0001	Phase 2 Haul Road	471170.43	4743725.62	2071.99	11.56	55.81	10.75	1.27E-01	1.27E-02	0.00E+00	9.58E-04	6.24E-07	1.08E-06	1.15E-03	5.97E-06
P2R_0002	Phase 2 Haul Road	471201.14	4743712.16	2083.61	11.56	55.81	10.75	1.27E-01	1.27E-02	0.00E+00	9.58E-04	6.24E-07	1.08E-06	1.15E-03	5.97E-06
P2R_0003	Phase 2 Haul Road	471231.85	4743698.71	2096.77	11.56	55.81	10.75	1.27E-01	1.27E-02	0.00E+00	9.58E-04	6.24E-07	1.08E-06	1.15E-03	5.97E-06
P2R_0004	Phase 2 Haul Road	471262.56	4743685.25	2103.82	11.56	55.81	10.75	1.27E-01	1.27E-02	0.00E+00	9.58E-04	6.24E-07	1.08E-06	1.15E-03	5.97E-06
P2R_0005	Phase 2 Haul Road	471293.27	4743671.79	2102.04	11.56	55.81	10.75	1.27E-01	1.27E-02	0.00E+00	9.58E-04	6.24E-07	1.08E-06	1.15E-03	5.97E-06
P2R_0006	Phase 2 Haul Road	471323.97	4743658.34	2099.30	11.56	55.81	10.75	1.27E-01	1.27E-02	0.00E+00	9.58E-04	6.24E-07	1.08E-06	1.15E-03	5.97E-06
P2R_0007	Phase 2 Haul Road	471354.68	4743644.88	2091.90	11.56	55.81	10.75	1.27E-01	1.27E-02	0.00E+00	9.58E-04	6.24E-07	1.08E-06	1.15E-03	5.97E-06
P2R_0008	Phase 2 Haul Road	471385.40	4743631.42	2081.69	11.56	55.81	10.75	1.27E-01	1.27E-02	0.00E+00	9.58E-04	6.24E-07	1.08E-06	1.15E-03	5.97E-06
P2R_0009	Phase 2 Haul Road	471416.10	4743617.97	2081.56	11.56	55.81	10.75	1.27E-01	1.27E-02	0.00E+00	9.58E-04	6.24E-07	1.08E-06	1.15E-03	5.97E-06
P2R_0010	Phase 2 Haul Road	471446.81	4743604.51	2084.25	11.56	55.81	10.75	1.27E-01	1.27E-02	0.00E+00	9.58E-04	6.24E-07	1.08E-06	1.15E-03	5.97E-06
P2R_0011	Phase 2 Haul Road	471477.52	4743591.06	2086.65	11.56	55.81	10.75	1.27E-01	1.27E-02	0.00E+00	9.58E-04	6.24E-07	1.08E-06	1.15E-03	5.97E-06
P2R_0012	Phase 2 Haul Road	471508.23	4743577.60	2079.89	11.56	55.81	10.75	1.27E-01	1.27E-02	0.00E+00	9.58E-04	6.24E-07	1.08E-06	1.15E-03	5.97E-06
P2R_0013	Phase 2 Haul Road	471538.94	4743564.14	2066.17	11.56	55.81	10.75	1.27E-01	1.27E-02	0.00E+00	9.58E-04	6.24E-07	1.08E-06	1.15E-03	5.97E-06
P2R_0014	Phase 2 Haul Road	471564.95	4743543.64	2056.44	11.56	55.81	10.75	1.27E-01	1.27E-02	0.00E+00	9.58E-04	6.24E-07	1.08E-06	1.15E-03	5.97E-06
P2R_0015	Phase 2 Haul Road	471571.99	4743511.81	2050.85	11.56	55.81	10.75	1.27E-01	1.27E-02	0.00E+00	9.58E-04	6.24E-07	1.08E-06	1.15E-03	5.97E-06
P2R_0016	Phase 2 Haul Road	471562.47	4743480.38	2045.30	11.56	55.81	10.75	1.27E-01	1.27E-02	0.00E+00	9.58E-04	6.24E-07	1.08E-06	1.15E-03	5.97E-06
P2R_0017	Phase 2 Haul Road	471549.68	4743449.39	2040.78	11.56	55.81	10.75	1.27E-01	1.27E-02	0.00E+00	9.58E-04	6.24E-07	1.08E-06	1.15E-03	5.97E-06
P2R_0018	Phase 2 Haul Road	471528.89	4743423.09	2037.04	11.56	55.81	10.75	1.27E-01	1.27E-02	0.00E+00	9.58E-04	6.24E-07	1.08E-06	1.15E-03	5.97E-06
P2R_0019	Phase 2 Haul Road	471501.57	4743408.18	2032.38	11.56	55.81	10.75	1.27E-01	1.27E-02	0.00E+00	9.58E-04	6.24E-07	1.08E-06	1.15E-03	5.97E-06
P2R_0020	Phase 2 Haul Road	471468.36	4743403.57	2028.34	11.56	55.81	10.75	1.27E-01	1.27E-02	0.00E+00	9.58E-04	6.24E-07	1.08E-06	1.15E-03	5.97E-06
P2R_0021	Phase 2 Haul Road	471436.75	4743412.19	2028.44	11.56	55.81	10.75	1.27E-01	1.27E-02	0.00E+00	9.58E-04	6.24E-07	1.08E-06	1.15E-03	5.97E-06
P2R_0022	Phase 2 Haul Road	471405.61	4743424.60	2032.08	11.56	55.81	10.75	1.27E-01	1.27E-02	0.00E+00	9.58E-04	6.24E-07	1.08E-06	1.15E-03	5.97E-06
P2R_0023	Phase 2 Haul Road	471374.46	4743437.02	2034.83	11.56	55.81	10.75	1.27E-01	1.27E-02	0.00E+00	9.58E-04	6.24E-07	1.08E-06	1.15E-03	5.97E-06
P2R_0024	Phase 2 Haul Road	471343.32	4743449.43	2039.33	11.56	55.81	10.75	1.27E-01	1.27E-02	0.00E+00	9.58E-04	6.24E-07	1.08E-06	1.15E-03	5.97E-06
P2R_0025	Phase 2 Haul Road	471312.18	4743461.85	2041.74	11.56	55.81	10.75	1.27E-01	1.27E-02	0.00E+00	9.58E-04	6.24E-07	1.08E-06	1.15E-03	5.97E-06
P2R_0026	Phase 2 Haul Road	471279.67	4743467.07	2035.33	11.56	55.81	10.75	1.27E-01	1.27E-02	0.00E+00	9.58E-04	6.24E-07	1.08E-06	1.15E-03	5.97E-06
P2R_0027	Phase 2 Haul Road	471248.25	4743457.07	2029.25	11.56	55.81	10.75	1.27E-01	1.27E-02	0.00E+00	9.58E-04	6.24E-07	1.08E-06	1.15E-03	5.97E-06
P2R_0028	Phase 2 Haul Road	471228.96	4743430.66	2023.77	11.56	55.81	10.75	1.27E-01	1.27E-02	0.00E+00	9.58E-04	6.24E-07	1.08E-06	1.15E-03	5.97E-06
P2R_0029	Phase 2 Haul Road	471211.77	4743401.87	2017.26	11.56	55.81	10.75	1.27E-01	1.27E-02	0.00E+00	9.58E-04	6.24E-07	1.08E-06	1.15E-03	5.97E-06
P2R_0030	Phase 2 Haul Road	471193.67	4743374.09	2011.02	11.56	55.81	10.75	1.27E-01	1.27E-02	0.00E+00	9.58E-04	6.24E-07	1.08E-06	1.15E-03	5.97E-06
P2R_0031	Phase 2 Haul Road	471163.29	4743371.01	2013.74	11.56	55.81	10.75	1.27E-01	1.27E-02	0.00E+00	9.58E-04	6.24E-07	1.08E-06	1.15E-03	5.97E-06
P2R_0032	Phase 2 Haul Road	471159.47	4743401.88	2015.88	11.56	55.81	10.75	1.27E-01	1.27E-02	0.00E+00	9.58E-04	6.24E-07	1.08E-06	1.15E-03	5.97E-06
P2R_0033	Phase 2 Haul Road	471159.80	4743435.41	2017.89	11.56	55.81	10.75	1.27E-01	1.27E-02	0.00E+00	9.58E-04	6.24E-07	1.08E-06	1.15E-03	5.97E-06
P2R_0034	Phase 2 Haul Road	471160.13	4743468.93	2022.78	11.56	55.81	10.75	1.27E-01	1.27E-02	0.00E+00	9.58E-04	6.24E-07	1.08E-06	1.15E-03	5.97E-06
P2R_0035	Phase 2 Haul Road	471152.92	4743500.95	2027.67	11.56	55.81	10.75	1.27E-01	1.27E-02	0.00E+00	9.58E-04	6.24E-07	1.08E-06	1.15E-03	5.97E-06
P2R_0036	Phase 2 Haul Road	471128.31	4743521.77	2028.20	11.56	55.81	10.75	1.27E-01	1.27E-02	0.00E+00	9.58E-04	6.24E-07	1.08E-06	1.15E-03	5.97E-06
P2R_0037	Phase 2 Haul Road	471094.93	4743524.84	2024.33	11.56	55.81	10.75	1.27E-01	1.27E-02	0.00E+00	9.58E-04	6.24E-07	1.08E-06	1.15E-03	5.97E-06
P2R_0038	Phase 2 Haul Road	471061.54	4743527.92	2020.64	11.56	55.81	10.75	1.27E-01	1.27E-02	0.00E+00	9.58E-04	6.24E-07	1.08E-06	1.15E-03	5.97E-06
P2R_0039	Phase 2 Haul Road	471028.15	4743530.99	2016.38	11.56	55.81	10.75	1.27E-01	1.27E-02	0.00E+00	9.58E-04	6.24E-07	1.08E-06	1.15E-03	5.97E-06
P2R_0040	Phase 2 Haul Road	470994.77	4743534.06	2009.69	11.56	55.81	10.75	1.27E-01	1.27E-02	0.00E+00	9.58E-04	6.24E-07	1.08E-06	1.15E-03	5.97E-06
P2R_0041	Phase 2 Haul Road	470961.87	4743538.12	2006.84	11.56	55.81	10.75	1.27E-01	1.27E-02	0.00E+00	9.58E-04	6.24E-07	1.08E-06	1.15E-03	5.97E-06
P2R_0042	Phase 2 Haul Road	470939.45	4743563.04	2012.91	11.56	55.81	10.75	1.27E-01	1.27E-02	0.00E+00	9.58E-04	6.24E-07	1.08E-06	1.15E-03	5.97E-06
P2R_0043	Phase 2 Haul Road	470917.02	4743587.96	2015.21	11.56	55.81	10.75	1.27E-01	1.27E-02	0.00E+00	9.58E-04	6.24E-07	1.08E-06	1.15E-03	5.97E-06
P2R_0044	Phase 2 Haul Road	470894.59	4743612.89	2013.99	11.56	55.81	10.75	1.27E-01	1.27E-02	0.00E+00	9.58E-04	6.24E-07	1.08E-06	1.15E-03	5.97E-06
P2R_0045	Phase 2 Haul Road	470872.16	4743637.81	2015.03	11.56	55.81	10.75	1.27E-01	1.27E-02	0.00E+00	9.58E-04	6.24E-07	1.08E-06	1.15E-03	5.97E-06
P2R_0046	Phase 2 Haul Road	470843.24	4743645.87	2018.96	11.56	55.81	10.75	1.27E-01	1.27E-02	0.00E+00	9.58E-04	6.24E-07	1.08E-06	1.15E-03	5.97E-06
P2R_0047	Phase 2 Haul Road	470809.88	4743642.45	2028.16	11.56	55.81	10.75	1.27E-01	1.27E-02	0.00E+00	9.58E-04	6.24E-07	1.08E-06	1.15E-03	5.97E-06
P2R_0048	Phase 2 Haul Road	470776.53	4743639.02	2033.49	11.56	55.81	10.75	1.27E-01	1.27E-02	0.00E+00	9.58E-04	6.24E-07	1.08E-06	1.15E-03	5.97E-06
P2R_0049	Phase 2 Haul Road	470743.18	4743635.60	2032.19	11.56	55.81	10.75	1.27E-01	1.27E-02	0.00E+00	9.58E-04	6.24E-07	1.08E-06	1.15E-03	5.97E-06
P2R_0050	Phase 2 Haul Road	470714.85	4743644.17	2033.26	11.56	55.81	10.75	1.27E-01	1.27E-02	0.00E+00	9.58E-04	6.24E-07	1.08E-06	1.15E-03	5.97E-06
P2R_0051	Phase 2 Haul Road	470693.90	4743670.35	2035.86	11.56	55.81	10.75	1.27E-01	1.27E-02	0.00E+00	9.58E-04	6.24E-07	1.08E-06	1.15E-03	5.97E-06
P2R_0052	Phase 2 Haul Road	470672.95	4743696.52	2034.49	11.56	55.81	10.75	1.27E-01	1.27E-02	0.00E+00	9.58E-04	6.24E-07	1.08E-06	1.15E-03	5.97E-06
P2R_0053	Phase 2 Haul Road	470651.99	4743722.69	2037.48	11.56	55.81	10.75	1.27E-01	1.27E-02	0.00E+00	9.58E-04	6.24E-07	1.08E-06	1.15E-03	5.97E-06
P2R_0054	Phase 2 Haul Road	470631.04	4743748.87	2041.28	11.56	55.81	10.75	1.27E-01	1.27E-02	0.00E+00	9.58E-04	6.24E-07	1.08E-06	1.15E-03	5.97E-06

Agrium - Rasmussen Valley Volume Source Input

Source ID	Source Description	Easting (m)	Northing (m)	Base Elevation (m)	Release Height (ft)	Horizontal Dimension (ft)	Vertical Dimension (ft)	PM10 (lb/hr)	PM25 (lb/hr)	NO2 (lb/hr)	Al (lb/hr)	As (lb/hr)	Cd (lb/hr)	Fe (lb/hr)	Ni (lb/hr)
P2R_0055	Phase 2 Haul Road	470610.08	4743775.04	2040.03	11.56	55.81	10.75	1.27E-01	1.27E-02	0.00E+00	9.58E-04	6.24E-07	1.08E-06	1.15E-03	5.97E-06
P2R_0056	Phase 2 Haul Road	470595.84	4743805.04	2035.84	11.56	55.81	10.75	1.27E-01	1.27E-02	0.00E+00	9.58E-04	6.24E-07	1.08E-06	1.15E-03	5.97E-06
P2R_0057	Phase 2 Haul Road	470603.93	4743837.29	2041.26	11.56	55.81	10.75	1.27E-01	1.27E-02	0.00E+00	9.58E-04	6.24E-07	1.08E-06	1.15E-03	5.97E-06
P2R_0058	Phase 2 Haul Road	470614.52	4743867.51	2048.52	11.56	55.81	10.75	1.27E-01	1.27E-02	0.00E+00	9.58E-04	6.24E-07	1.08E-06	1.15E-03	5.97E-06
P2R_0059	Phase 2 Haul Road	470600.30	4743894.28	2056.82	11.56	55.81	10.75	1.27E-01	1.27E-02	0.00E+00	9.58E-04	6.24E-07	1.08E-06	1.15E-03	5.97E-06
P2R_0060	Phase 2 Haul Road	470569.53	4743896.67	2058.50	11.56	55.81	10.75	1.27E-01	1.27E-02	0.00E+00	9.58E-04	6.24E-07	1.08E-06	1.15E-03	5.97E-06
P2R_0061	Phase 2 Haul Road	470537.26	4743887.82	2060.95	11.56	55.81	10.75	1.27E-01	1.27E-02	0.00E+00	9.58E-04	6.24E-07	1.08E-06	1.15E-03	5.97E-06
P2R_0062	Phase 2 Haul Road	470505.93	4743884.88	2066.88	11.56	55.81	10.75	1.27E-01	1.27E-02	0.00E+00	9.58E-04	6.24E-07	1.08E-06	1.15E-03	5.97E-06
P2R_0063	Phase 2 Haul Road	470477.91	4743902.10	2072.51	11.56	55.81	10.75	1.27E-01	1.27E-02	0.00E+00	9.58E-04	6.24E-07	1.08E-06	1.15E-03	5.97E-06
P2R_0064	Phase 2 Haul Road	470455.44	4743926.99	2074.17	11.56	55.81	10.75	1.27E-01	1.27E-02	0.00E+00	9.58E-04	6.24E-07	1.08E-06	1.15E-03	5.97E-06
P2R_0065	Phase 2 Haul Road	470432.97	4743951.87	2073.64	11.56	55.81	10.75	1.27E-01	1.27E-02	0.00E+00	9.58E-04	6.24E-07	1.08E-06	1.15E-03	5.97E-06
P5R_0001	Phase 5 Haul Road	472413.90	4743128.12	2088.41	11.56	55.81	10.75	8.76E-02	8.76E-03	0.00E+00	6.63E-04	4.32E-07	7.45E-07	7.94E-04	4.13E-06
P5R_0002	Phase 5 Haul Road	472436.82	4743103.65	2088.42	11.56	55.81	10.75	8.76E-02	8.76E-03	0.00E+00	6.63E-04	4.32E-07	7.45E-07	7.94E-04	4.13E-06
P5R_0003	Phase 5 Haul Road	472459.73	4743079.17	2087.51	11.56	55.81	10.75	8.76E-02	8.76E-03	0.00E+00	6.63E-04	4.32E-07	7.45E-07	7.94E-04	4.13E-06
P5R_0004	Phase 5 Haul Road	472482.65	4743054.70	2081.88	11.56	55.81	10.75	8.76E-02	8.76E-03	0.00E+00	6.63E-04	4.32E-07	7.45E-07	7.94E-04	4.13E-06
P5R_0005	Phase 5 Haul Road	472505.57	4743030.23	2071.38	11.56	55.81	10.75	8.76E-02	8.76E-03	0.00E+00	6.63E-04	4.32E-07	7.45E-07	7.94E-04	4.13E-06
P5R_0006	Phase 5 Haul Road	472528.49	4743005.75	2061.48	11.56	55.81	10.75	8.76E-02	8.76E-03	0.00E+00	6.63E-04	4.32E-07	7.45E-07	7.94E-04	4.13E-06
P5R_0007	Phase 5 Haul Road	472551.40	4742981.28	2061.31	11.56	55.81	10.75	8.76E-02	8.76E-03	0.00E+00	6.63E-04	4.32E-07	7.45E-07	7.94E-04	4.13E-06
P5R_0008	Phase 5 Haul Road	472574.32	4742956.81	2067.83	11.56	55.81	10.75	8.76E-02	8.76E-03	0.00E+00	6.63E-04	4.32E-07	7.45E-07	7.94E-04	4.13E-06
P5R_0009	Phase 5 Haul Road	472597.24	4742932.34	2072.83	11.56	55.81	10.75	8.76E-02	8.76E-03	0.00E+00	6.63E-04	4.32E-07	7.45E-07	7.94E-04	4.13E-06
P5R_0010	Phase 5 Haul Road	472598.88	4742901.74	2069.60	11.56	55.81	10.75	8.76E-02	8.76E-03	0.00E+00	6.63E-04	4.32E-07	7.45E-07	7.94E-04	4.13E-06
P5R_0011	Phase 5 Haul Road	472571.66	4742887.01	2057.92	11.56	55.81	10.75	8.76E-02	8.76E-03	0.00E+00	6.63E-04	4.32E-07	7.45E-07	7.94E-04	4.13E-06
P5R_0012	Phase 5 Haul Road	472538.56	4742881.68	2046.41	11.56	55.81	10.75	8.76E-02	8.76E-03	0.00E+00	6.63E-04	4.32E-07	7.45E-07	7.94E-04	4.13E-06
P5R_0013	Phase 5 Haul Road	472505.46	4742876.34	2033.94	11.56	55.81	10.75	8.76E-02	8.76E-03	0.00E+00	6.63E-04	4.32E-07	7.45E-07	7.94E-04	4.13E-06
P5R_0014	Phase 5 Haul Road	472472.36	4742871.01	2023.15	11.56	55.81	10.75	8.76E-02	8.76E-03	0.00E+00	6.63E-04	4.32E-07	7.45E-07	7.94E-04	4.13E-06
P5R_0015	Phase 5 Haul Road	472439.26	4742865.68	2018.67	11.56	55.81	10.75	8.76E-02	8.76E-03	0.00E+00	6.63E-04	4.32E-07	7.45E-07	7.94E-04	4.13E-06
P5R_0016	Phase 5 Haul Road	472406.05	4742865.95	2017.09	11.56	55.81	10.75	8.76E-02	8.76E-03	0.00E+00	6.63E-04	4.32E-07	7.45E-07	7.94E-04	4.13E-06
P5R_0017	Phase 5 Haul Road	472374.33	4742874.46	2017.10	11.56	55.81	10.75	8.76E-02	8.76E-03	0.00E+00	6.63E-04	4.32E-07	7.45E-07	7.94E-04	4.13E-06
P5R_0018	Phase 5 Haul Road	472345.77	4742892.03	2018.81	11.56	55.81	10.75	8.76E-02	8.76E-03	0.00E+00	6.63E-04	4.32E-07	7.45E-07	7.94E-04	4.13E-06
P5R_0019	Phase 5 Haul Road	472321.10	4742914.49	2020.67	11.56	55.81	10.75	8.76E-02	8.76E-03	0.00E+00	6.63E-04	4.32E-07	7.45E-07	7.94E-04	4.13E-06
P5R_0020	Phase 5 Haul Road	472297.52	4742938.32	2023.97	11.56	55.81	10.75	8.76E-02	8.76E-03	0.00E+00	6.63E-04	4.32E-07	7.45E-07	7.94E-04	4.13E-06
P5R_0021	Phase 5 Haul Road	472273.94	4742962.15	2026.89	11.56	55.81	10.75	8.76E-02	8.76E-03	0.00E+00	6.63E-04	4.32E-07	7.45E-07	7.94E-04	4.13E-06
P5R_0022	Phase 5 Haul Road	472250.36	4742985.99	2030.51	11.56	55.81	10.75	8.76E-02	8.76E-03	0.00E+00	6.63E-04	4.32E-07	7.45E-07	7.94E-04	4.13E-06
P5R_0023	Phase 5 Haul Road	472228.45	4743011.35	2034.95	11.56	55.81	10.75	8.76E-02	8.76E-03	0.00E+00	6.63E-04	4.32E-07	7.45E-07	7.94E-04	4.13E-06
P5R_0024	Phase 5 Haul Road	472206.77	4743036.93	2039.46	11.56	55.81	10.75	8.76E-02	8.76E-03	0.00E+00	6.63E-04	4.32E-07	7.45E-07	7.94E-04	4.13E-06
P5R_0025	Phase 5 Haul Road	472185.09	4743062.50	2043.66	11.56	55.81	10.75	8.76E-02	8.76E-03	0.00E+00	6.63E-04	4.32E-07	7.45E-07	7.94E-04	4.13E-06
P5R_0026	Phase 5 Haul Road	472163.41	4743088.08	2048.32	11.56	55.81	10.75	8.76E-02	8.76E-03	0.00E+00	6.63E-04	4.32E-07	7.45E-07	7.94E-04	4.13E-06
P5R_0027	Phase 5 Haul Road	472141.73	4743113.66	2052.81	11.56	55.81	10.75	8.76E-02	8.76E-03	0.00E+00	6.63E-04	4.32E-07	7.45E-07	7.94E-04	4.13E-06
P5R_0028	Phase 5 Haul Road	472120.05	4743139.23	2056.86	11.56	55.81	10.75	8.76E-02	8.76E-03	0.00E+00	6.63E-04	4.32E-07	7.45E-07	7.94E-04	4.13E-06
P5R_0029	Phase 5 Haul Road	472098.37	4743164.81	2058.81	11.56	55.81	10.75	8.76E-02	8.76E-03	0.00E+00	6.63E-04	4.32E-07	7.45E-07	7.94E-04	4.13E-06
P5R_0030	Phase 5 Haul Road	472076.69	4743190.38	2061.95	11.56	55.81	10.75	8.76E-02	8.76E-03	0.00E+00	6.63E-04	4.32E-07	7.45E-07	7.94E-04	4.13E-06
P5R_0031	Phase 5 Haul Road	472051.78	4743211.43	2063.62	11.56	55.81	10.75	8.76E-02	8.76E-03	0.00E+00	6.63E-04	4.32E-07	7.45E-07	7.94E-04	4.13E-06
P5R_0032	Phase 5 Haul Road	472020.53	4743223.56	2059.23	11.56	55.81	10.75	8.76E-02	8.76E-03	0.00E+00	6.63E-04	4.32E-07	7.45E-07	7.94E-04	4.13E-06
P5R_0033	Phase 5 Haul Road	471989.27	4743235.70	2058.07	11.56	55.81	10.75	8.76E-02	8.76E-03	0.00E+00	6.63E-04	4.32E-07	7.45E-07	7.94E-04	4.13E-06
P5R_0034	Phase 5 Haul Road	471958.02	4743247.83	2065.07	11.56	55.81	10.75	8.76E-02	8.76E-03	0.00E+00	6.63E-04	4.32E-07	7.45E-07	7.94E-04	4.13E-06
P5R_0035	Phase 5 Haul Road	471926.76	4743259.97	2071.03	11.56	55.81	10.75	8.76E-02	8.76E-03	0.00E+00	6.63E-04	4.32E-07	7.45E-07	7.94E-04	4.13E-06
P5R_0036	Phase 5 Haul Road	471895.51	4743272.10	2072.57	11.56	55.81	10.75	8.76E-02	8.76E-03	0.00E+00	6.63E-04	4.32E-07	7.45E-07	7.94E-04	4.13E-06
P5R_0037	Phase 5 Haul Road	471864.25	4743284.24	2071.09	11.56	55.81	10.75	8.76E-02	8.76E-03	0.00E+00	6.63E-04	4.32E-07	7.45E-07	7.94E-04	4.13E-06
P5R_0038	Phase 5 Haul Road	471833.00	4743296.37	2066.76	11.56	55.81	10.75	8.76E-02	8.76E-03	0.00E+00	6.63E-04	4.32E-07	7.45E-07	7.94E-04	4.13E-06
P5R_0039	Phase 5 Haul Road	471801.74	4743308.51	2061.41	11.56	55.81	10.75	8.76E-02	8.76E-03	0.00E+00	6.63E-04	4.32E-07	7.45E-07	7.94E-04	4.13E-06
P5R_0040	Phase 5 Haul Road	471774.72	4743303.25	2056.70	11.56	55.81	10.75	8.76E-02	8.76E-03	0.00E+00	6.63E-04	4.32E-07	7.45E-07	7.94E-04	4.13E-06
P5R_0041	Phase 5 Haul Road	471752.54	4743278.11	2051.37	11.56	55.81	10.75	8.76E-02	8.76E-03	0.00E+00	6.63E-04	4.32E-07	7.45E-07	7.94E-04	4.13E-06
P5R_0042	Phase 5 Haul Road	471730.36	4743252.97	2045.79	11.56	55.81	10.75	8.76E-02	8.76E-03	0.00E+00	6.63E-04	4.32E-07	7.45E-07	7.94E-04	4.13E-06
P5R_0043	Phase 5 Haul Road	471708.18	4743227.82	2042.19	11.56	55.81	10.75	8.76E-02	8.76E-03	0.00E+00	6.63E-04	4.32E-07	7.45E-07	7.94E-04	4.13E-06

Agrium - Rasmussen Valley Volume Source Input

Source ID	Source Description	Easting (m)	Northing (m)	Base Elevation (m)	Release Height (ft)	Horizontal Dimension (ft)	Vertical Dimension (ft)	PM10 (lb/hr)	PM25 (lb/hr)	NO2 (lb/hr)	Al (lb/hr)	As (lb/hr)	Cd (lb/hr)	Fe (lb/hr)	Ni (lb/hr)
P5R_0044	Phase 5 Haul Road	471676.24	4743223.87	2034.72	11.56	55.81	10.75	8.76E-02	8.76E-03	0.00E+00	6.63E-04	4.32E-07	7.45E-07	7.94E-04	4.13E-06
P5R_0045	Phase 5 Haul Road	471655.23	4743242.30	2032.17	11.56	55.81	10.75	8.76E-02	8.76E-03	0.00E+00	6.63E-04	4.32E-07	7.45E-07	7.94E-04	4.13E-06
P5R_0046	Phase 5 Haul Road	471654.11	4743274.83	2034.92	11.56	55.81	10.75	8.76E-02	8.76E-03	0.00E+00	6.63E-04	4.32E-07	7.45E-07	7.94E-04	4.13E-06
P5R_0047	Phase 5 Haul Road	471658.48	4743308.07	2039.46	11.56	55.81	10.75	8.76E-02	8.76E-03	0.00E+00	6.63E-04	4.32E-07	7.45E-07	7.94E-04	4.13E-06
P5R_0048	Phase 5 Haul Road	471651.83	4743337.60	2043.47	11.56	55.81	10.75	8.76E-02	8.76E-03	0.00E+00	6.63E-04	4.32E-07	7.45E-07	7.94E-04	4.13E-06
P5R_0049	Phase 5 Haul Road	471627.15	4743359.53	2042.87	11.56	55.81	10.75	8.76E-02	8.76E-03	0.00E+00	6.63E-04	4.32E-07	7.45E-07	7.94E-04	4.13E-06
P5R_0050	Phase 5 Haul Road	471594.74	4743368.14	2037.46	11.56	55.81	10.75	8.76E-02	8.76E-03	0.00E+00	6.63E-04	4.32E-07	7.45E-07	7.94E-04	4.13E-06
P5R_0051	Phase 5 Haul Road	471562.34	4743376.75	2031.19	11.56	55.81	10.75	8.76E-02	8.76E-03	0.00E+00	6.63E-04	4.32E-07	7.45E-07	7.94E-04	4.13E-06
P5R_0052	Phase 5 Haul Road	471529.94	4743385.36	2030.68	11.56	55.81	10.75	8.76E-02	8.76E-03	0.00E+00	6.63E-04	4.32E-07	7.45E-07	7.94E-04	4.13E-06
P5R_0053	Phase 5 Haul Road	471497.53	4743393.97	2029.84	11.56	55.81	10.75	8.76E-02	8.76E-03	0.00E+00	6.63E-04	4.32E-07	7.45E-07	7.94E-04	4.13E-06
P5R_0054	Phase 5 Haul Road	471465.13	4743402.58	2027.95	11.56	55.81	10.75	8.76E-02	8.76E-03	0.00E+00	6.63E-04	4.32E-07	7.45E-07	7.94E-04	4.13E-06
P5R_0055	Phase 5 Haul Road	471434.06	4743415.03	2029.21	11.56	55.81	10.75	8.76E-02	8.76E-03	0.00E+00	6.63E-04	4.32E-07	7.45E-07	7.94E-04	4.13E-06
P5R_0056	Phase 5 Haul Road	471403.28	4743428.32	2032.70	11.56	55.81	10.75	8.76E-02	8.76E-03	0.00E+00	6.63E-04	4.32E-07	7.45E-07	7.94E-04	4.13E-06
P5R_0057	Phase 5 Haul Road	471372.50	4743441.62	2035.52	11.56	55.81	10.75	8.76E-02	8.76E-03	0.00E+00	6.63E-04	4.32E-07	7.45E-07	7.94E-04	4.13E-06
P5R_0058	Phase 5 Haul Road	471341.71	4743454.91	2040.58	11.56	55.81	10.75	8.76E-02	8.76E-03	0.00E+00	6.63E-04	4.32E-07	7.45E-07	7.94E-04	4.13E-06
P5R_0059	Phase 5 Haul Road	471310.93	4743468.20	2042.71	11.56	55.81	10.75	8.76E-02	8.76E-03	0.00E+00	6.63E-04	4.32E-07	7.45E-07	7.94E-04	4.13E-06
P5R_0060	Phase 5 Haul Road	471280.15	4743481.49	2037.75	11.56	55.81	10.75	8.76E-02	8.76E-03	0.00E+00	6.63E-04	4.32E-07	7.45E-07	7.94E-04	4.13E-06
P5R_0061	Phase 5 Haul Road	471249.37	4743494.78	2038.32	11.56	55.81	10.75	8.76E-02	8.76E-03	0.00E+00	6.63E-04	4.32E-07	7.45E-07	7.94E-04	4.13E-06
P5R_0062	Phase 5 Haul Road	471217.58	4743504.82	2039.78	11.56	55.81	10.75	8.76E-02	8.76E-03	0.00E+00	6.63E-04	4.32E-07	7.45E-07	7.94E-04	4.13E-06
P5R_0063	Phase 5 Haul Road	471184.67	4743511.20	2035.38	11.56	55.81	10.75	8.76E-02	8.76E-03	0.00E+00	6.63E-04	4.32E-07	7.45E-07	7.94E-04	4.13E-06
P5R_0064	Phase 5 Haul Road	471151.76	4743517.58	2030.97	11.56	55.81	10.75	8.76E-02	8.76E-03	0.00E+00	6.63E-04	4.32E-07	7.45E-07	7.94E-04	4.13E-06
P5R_0065	Phase 5 Haul Road	471118.84	4743523.97	2027.39	11.56	55.81	10.75	8.76E-02	8.76E-03	0.00E+00	6.63E-04	4.32E-07	7.45E-07	7.94E-04	4.13E-06
P5R_0066	Phase 5 Haul Road	471085.58	4743527.86	2023.75	11.56	55.81	10.75	8.76E-02	8.76E-03	0.00E+00	6.63E-04	4.32E-07	7.45E-07	7.94E-04	4.13E-06
P5R_0067	Phase 5 Haul Road	471052.17	4743530.73	2020.02	11.56	55.81	10.75	8.76E-02	8.76E-03	0.00E+00	6.63E-04	4.32E-07	7.45E-07	7.94E-04	4.13E-06
P5R_0068	Phase 5 Haul Road	471018.77	4743533.59	2014.90	11.56	55.81	10.75	8.76E-02	8.76E-03	0.00E+00	6.63E-04	4.32E-07	7.45E-07	7.94E-04	4.13E-06
P5R_0069	Phase 5 Haul Road	470985.36	4743536.45	2008.46	11.56	55.81	10.75	8.76E-02	8.76E-03	0.00E+00	6.63E-04	4.32E-07	7.45E-07	7.94E-04	4.13E-06
P5R_0070	Phase 5 Haul Road	470955.01	4743545.45	2008.38	11.56	55.81	10.75	8.76E-02	8.76E-03	0.00E+00	6.63E-04	4.32E-07	7.45E-07	7.94E-04	4.13E-06
P5R_0071	Phase 5 Haul Road	470932.58	4743570.37	2014.31	11.56	55.81	10.75	8.76E-02	8.76E-03	0.00E+00	6.63E-04	4.32E-07	7.45E-07	7.94E-04	4.13E-06
P5R_0072	Phase 5 Haul Road	470910.16	4743595.30	2014.97	11.56	55.81	10.75	8.76E-02	8.76E-03	0.00E+00	6.63E-04	4.32E-07	7.45E-07	7.94E-04	4.13E-06
P5R_0073	Phase 5 Haul Road	470887.74	4743620.23	2013.71	11.56	55.81	10.75	8.76E-02	8.76E-03	0.00E+00	6.63E-04	4.32E-07	7.45E-07	7.94E-04	4.13E-06
P5R_0074	Phase 5 Haul Road	470865.31	4743645.15	2015.98	11.56	55.81	10.75	8.76E-02	8.76E-03	0.00E+00	6.63E-04	4.32E-07	7.45E-07	7.94E-04	4.13E-06
P5R_0075	Phase 5 Haul Road	470833.10	4743644.71	2021.12	11.56	55.81	10.75	8.76E-02	8.76E-03	0.00E+00	6.63E-04	4.32E-07	7.45E-07	7.94E-04	4.13E-06
P5R_0076	Phase 5 Haul Road	470799.74	4743641.31	2030.45	11.56	55.81	10.75	8.76E-02	8.76E-03	0.00E+00	6.63E-04	4.32E-07	7.45E-07	7.94E-04	4.13E-06
P5R_0077	Phase 5 Haul Road	470766.39	4743637.92	2033.94	11.56	55.81	10.75	8.76E-02	8.76E-03	0.00E+00	6.63E-04	4.32E-07	7.45E-07	7.94E-04	4.13E-06
P5R_0078	Phase 5 Haul Road	470733.03	4743634.52	2031.58	11.56	55.81	10.75	8.76E-02	8.76E-03	0.00E+00	6.63E-04	4.32E-07	7.45E-07	7.94E-04	4.13E-06
P5R_0079	Phase 5 Haul Road	470708.93	4743653.36	2035.01	11.56	55.81	10.75	8.76E-02	8.76E-03	0.00E+00	6.63E-04	4.32E-07	7.45E-07	7.94E-04	4.13E-06
P5R_0080	Phase 5 Haul Road	470687.83	4743679.42	2035.62	11.56	55.81	10.75	8.76E-02	8.76E-03	0.00E+00	6.63E-04	4.32E-07	7.45E-07	7.94E-04	4.13E-06
P5R_0081	Phase 5 Haul Road	470666.73	4743705.47	2035.03	11.56	55.81	10.75	8.76E-02	8.76E-03	0.00E+00	6.63E-04	4.32E-07	7.45E-07	7.94E-04	4.13E-06
P5R_0082	Phase 5 Haul Road	470645.63	4743731.53	2039.27	11.56	55.81	10.75	8.76E-02	8.76E-03	0.00E+00	6.63E-04	4.32E-07	7.45E-07	7.94E-04	4.13E-06
P5R_0083	Phase 5 Haul Road	470624.53	4743757.58	2041.37	11.56	55.81	10.75	8.76E-02	8.76E-03	0.00E+00	6.63E-04	4.32E-07	7.45E-07	7.94E-04	4.13E-06
P5R_0084	Phase 5 Haul Road	470605.02	4743784.64	2039.21	11.56	55.81	10.75	8.76E-02	8.76E-03	0.00E+00	6.63E-04	4.32E-07	7.45E-07	7.94E-04	4.13E-06
P5R_0085	Phase 5 Haul Road	470597.96	4743815.77	2037.49	11.56	55.81	10.75	8.76E-02	8.76E-03	0.00E+00	6.63E-04	4.32E-07	7.45E-07	7.94E-04	4.13E-06
P5R_0086	Phase 5 Haul Road	470609.97	4743846.60	2042.41	11.56	55.81	10.75	8.76E-02	8.76E-03	0.00E+00	6.63E-04	4.32E-07	7.45E-07	7.94E-04	4.13E-06
P5R_0087	Phase 5 Haul Road	470614.41	4743878.76	2051.31	11.56	55.81	10.75	8.76E-02	8.76E-03	0.00E+00	6.63E-04	4.32E-07	7.45E-07	7.94E-04	4.13E-06
P5R_0088	Phase 5 Haul Road	470591.15	4743900.16	2058.88	11.56	55.81	10.75	8.76E-02	8.76E-03	0.00E+00	6.63E-04	4.32E-07	7.45E-07	7.94E-04	4.13E-06
P5R_0089	Phase 5 Haul Road	470558.20	4743894.00	2058.65	11.56	55.81	10.75	8.76E-02	8.76E-03	0.00E+00	6.63E-04	4.32E-07	7.45E-07	7.94E-04	4.13E-06
P5R_0090	Phase 5 Haul Road	470526.15	4743884.31	2063.05	11.56	55.81	10.75	8.76E-02	8.76E-03	0.00E+00	6.63E-04	4.32E-07	7.45E-07	7.94E-04	4.13E-06
P5R_0091	Phase 5 Haul Road	470494.85	4743890.27	2069.54	11.56	55.81	10.75	8.76E-02	8.76E-03	0.00E+00	6.63E-04	4.32E-07	7.45E-07	7.94E-04	4.13E-06
P5R_0092	Phase 5 Haul Road	470469.45	4743910.96	2074.64	11.56	55.81	10.75	8.76E-02	8.76E-03	0.00E+00	6.63E-04	4.32E-07	7.45E-07	7.94E-04	4.13E-06
P5R_0093	Phase 5 Haul Road	470446.99	4743935.85	2073.69	11.56	55.81	10.75	8.76E-02	8.76E-03	0.00E+00	6.63E-04	4.32E-07	7.45E-07	7.94E-04	4.13E-06
P5R_0094	Phase 5 Haul Road	470430.72	4743953.88	2073.60	11.56	55.81	10.75	8.76E-02	8.76E-03	0.00E+00	6.63E-04	4.32E-07	7.45E-07	7.94E-04	4.13E-06
P8R_0001	Phase 8 Haul Road	473571.27	4742074.37	2063.77	11.56	55.81	10.75	6.01E-02	6.01E-03	0.00E+00	4.55E-04	2.96E-07	5.11E-07	5.45E-04	2.83E-06
P8R_0002	Phase 8 Haul Road	473595.57	4742051.27	2060.51	11.56	55.81	10.75	6.01E-02	6.01E-03	0.00E+00	4.55E-04	2.96E-07	5.11E-07	5.45E-04	2.83E-06
P8R_0003	Phase 8 Haul Road	473619.87	4742028.16	2058.25	11.56	55.81	10.75	6.01E-02	6.01E-03	0.00E+00	4.55E-04	2.96E-07	5.11E-07	5.45E-04	2.83E-06

Agrium - Rasmussen Valley Volume Source Input

Source ID	Source Description	Easting (m)	Northing (m)	Base Elevation (m)	Release Height (ft)	Horizontal Dimension (ft)	Vertical Dimension (ft)	PM10 (lb/hr)	PM25 (lb/hr)	NO2 (lb/hr)	Al (lb/hr)	As (lb/hr)	Cd (lb/hr)	Fe (lb/hr)	Ni (lb/hr)
P8R_0004	Phase 8 Haul Road	473644.16	4742005.06	2056.38	11.56	55.81	10.75	6.01E-02	6.01E-03	0.00E+00	4.55E-04	2.96E-07	5.11E-07	5.45E-04	2.83E-06
P8R_0005	Phase 8 Haul Road	473660.55	4741977.84	2053.84	11.56	55.81	10.75	6.01E-02	6.01E-03	0.00E+00	4.55E-04	2.96E-07	5.11E-07	5.45E-04	2.83E-06
P8R_0006	Phase 8 Haul Road	473657.28	4741945.33	2049.26	11.56	55.81	10.75	6.01E-02	6.01E-03	0.00E+00	4.55E-04	2.96E-07	5.11E-07	5.45E-04	2.83E-06
P8R_0007	Phase 8 Haul Road	473636.69	4741920.18	2042.27	11.56	55.81	10.75	6.01E-02	6.01E-03	0.00E+00	4.55E-04	2.96E-07	5.11E-07	5.45E-04	2.83E-06
P8R_0008	Phase 8 Haul Road	473611.55	4741898.00	2033.84	11.56	55.81	10.75	6.01E-02	6.01E-03	0.00E+00	4.55E-04	2.96E-07	5.11E-07	5.45E-04	2.83E-06
P8R_0009	Phase 8 Haul Road	473586.41	4741875.82	2025.52	11.56	55.81	10.75	6.01E-02	6.01E-03	0.00E+00	4.55E-04	2.96E-07	5.11E-07	5.45E-04	2.83E-06
P8R_0010	Phase 8 Haul Road	473554.84	4741867.68	2019.81	11.56	55.81	10.75	6.01E-02	6.01E-03	0.00E+00	4.55E-04	2.96E-07	5.11E-07	5.45E-04	2.83E-06
P8R_0011	Phase 8 Haul Road	473522.92	4741876.31	2015.84	11.56	55.81	10.75	6.01E-02	6.01E-03	0.00E+00	4.55E-04	2.96E-07	5.11E-07	5.45E-04	2.83E-06
P8R_0012	Phase 8 Haul Road	473495.66	4741894.85	2016.27	11.56	55.81	10.75	6.01E-02	6.01E-03	0.00E+00	4.55E-04	2.96E-07	5.11E-07	5.45E-04	2.83E-06
P8R_0013	Phase 8 Haul Road	473470.53	4741917.04	2018.87	11.56	55.81	10.75	6.01E-02	6.01E-03	0.00E+00	4.55E-04	2.96E-07	5.11E-07	5.45E-04	2.83E-06
P8R_0014	Phase 8 Haul Road	473445.39	4741939.23	2020.38	11.56	55.81	10.75	6.01E-02	6.01E-03	0.00E+00	4.55E-04	2.96E-07	5.11E-07	5.45E-04	2.83E-06
P8R_0015	Phase 8 Haul Road	473420.26	4741961.42	2021.26	11.56	55.81	10.75	6.01E-02	6.01E-03	0.00E+00	4.55E-04	2.96E-07	5.11E-07	5.45E-04	2.83E-06
P8R_0016	Phase 8 Haul Road	473395.13	4741983.61	2020.71	11.56	55.81	10.75	6.01E-02	6.01E-03	0.00E+00	4.55E-04	2.96E-07	5.11E-07	5.45E-04	2.83E-06
P8R_0017	Phase 8 Haul Road	473369.99	4742005.80	2021.03	11.56	55.81	10.75	6.01E-02	6.01E-03	0.00E+00	4.55E-04	2.96E-07	5.11E-07	5.45E-04	2.83E-06
P8R_0018	Phase 8 Haul Road	473344.86	4742027.99	2023.14	11.56	55.81	10.75	6.01E-02	6.01E-03	0.00E+00	4.55E-04	2.96E-07	5.11E-07	5.45E-04	2.83E-06
P8R_0019	Phase 8 Haul Road	473319.73	4742050.18	2023.68	11.56	55.81	10.75	6.01E-02	6.01E-03	0.00E+00	4.55E-04	2.96E-07	5.11E-07	5.45E-04	2.83E-06
P8R_0020	Phase 8 Haul Road	473294.59	4742072.37	2022.76	11.56	55.81	10.75	6.01E-02	6.01E-03	0.00E+00	4.55E-04	2.96E-07	5.11E-07	5.45E-04	2.83E-06
P8R_0021	Phase 8 Haul Road	473269.46	4742094.56	2023.87	11.56	55.81	10.75	6.01E-02	6.01E-03	0.00E+00	4.55E-04	2.96E-07	5.11E-07	5.45E-04	2.83E-06
P8R_0022	Phase 8 Haul Road	473244.32	4742116.75	2023.56	11.56	55.81	10.75	6.01E-02	6.01E-03	0.00E+00	4.55E-04	2.96E-07	5.11E-07	5.45E-04	2.83E-06
P8R_0023	Phase 8 Haul Road	473219.19	4742138.94	2022.46	11.56	55.81	10.75	6.01E-02	6.01E-03	0.00E+00	4.55E-04	2.96E-07	5.11E-07	5.45E-04	2.83E-06
P8R_0024	Phase 8 Haul Road	473191.70	4742157.22	2020.56	11.56	55.81	10.75	6.01E-02	6.01E-03	0.00E+00	4.55E-04	2.96E-07	5.11E-07	5.45E-04	2.83E-06
P8R_0025	Phase 8 Haul Road	473160.32	4742169.02	2016.05	11.56	55.81	10.75	6.01E-02	6.01E-03	0.00E+00	4.55E-04	2.96E-07	5.11E-07	5.45E-04	2.83E-06
P8R_0026	Phase 8 Haul Road	473133.47	4742152.68	2009.46	11.56	55.81	10.75	6.01E-02	6.01E-03	0.00E+00	4.55E-04	2.96E-07	5.11E-07	5.45E-04	2.83E-06
P8R_0027	Phase 8 Haul Road	473107.40	4742131.61	2004.92	11.56	55.81	10.75	6.01E-02	6.01E-03	0.00E+00	4.55E-04	2.96E-07	5.11E-07	5.45E-04	2.83E-06
P8R_0028	Phase 8 Haul Road	473078.34	4742114.92	2002.36	11.56	55.81	10.75	6.01E-02	6.01E-03	0.00E+00	4.55E-04	2.96E-07	5.11E-07	5.45E-04	2.83E-06
P8R_0029	Phase 8 Haul Road	473049.15	4742098.42	2000.80	11.56	55.81	10.75	6.01E-02	6.01E-03	0.00E+00	4.55E-04	2.96E-07	5.11E-07	5.45E-04	2.83E-06
P8R_0030	Phase 8 Haul Road	473019.96	4742081.92	1998.61	11.56	55.81	10.75	6.01E-02	6.01E-03	0.00E+00	4.55E-04	2.96E-07	5.11E-07	5.45E-04	2.83E-06
P8R_0031	Phase 8 Haul Road	472991.37	4742095.93	1997.76	11.56	55.81	10.75	6.01E-02	6.01E-03	0.00E+00	4.55E-04	2.96E-07	5.11E-07	5.45E-04	2.83E-06
P8R_0032	Phase 8 Haul Road	472966.69	4742115.86	1997.88	11.56	55.81	10.75	6.01E-02	6.01E-03	0.00E+00	4.55E-04	2.96E-07	5.11E-07	5.45E-04	2.83E-06
P8R_0033	Phase 8 Haul Road	472964.53	4742149.31	2001.15	11.56	55.81	10.75	6.01E-02	6.01E-03	0.00E+00	4.55E-04	2.96E-07	5.11E-07	5.45E-04	2.83E-06
P8R_0034	Phase 8 Haul Road	472976.48	4742178.49	2003.94	11.56	55.81	10.75	6.01E-02	6.01E-03	0.00E+00	4.55E-04	2.96E-07	5.11E-07	5.45E-04	2.83E-06
P8R_0035	Phase 8 Haul Road	472996.88	4742205.09	2007.57	11.56	55.81	10.75	6.01E-02	6.01E-03	0.00E+00	4.55E-04	2.96E-07	5.11E-07	5.45E-04	2.83E-06
P8R_0036	Phase 8 Haul Road	473017.28	4742231.70	2012.52	11.56	55.81	10.75	6.01E-02	6.01E-03	0.00E+00	4.55E-04	2.96E-07	5.11E-07	5.45E-04	2.83E-06
P8R_0037	Phase 8 Haul Road	473021.82	4742263.12	2017.08	11.56	55.81	10.75	6.01E-02	6.01E-03	0.00E+00	4.55E-04	2.96E-07	5.11E-07	5.45E-04	2.83E-06
P8R_0038	Phase 8 Haul Road	473019.64	4742296.58	2022.56	11.56	55.81	10.75	6.01E-02	6.01E-03	0.00E+00	4.55E-04	2.96E-07	5.11E-07	5.45E-04	2.83E-06
P8R_0039	Phase 8 Haul Road	472998.36	4742321.76	2023.61	11.56	55.81	10.75	6.01E-02	6.01E-03	0.00E+00	4.55E-04	2.96E-07	5.11E-07	5.45E-04	2.83E-06
P8R_0040	Phase 8 Haul Road	472974.57	4742345.27	2022.54	11.56	55.81	10.75	6.01E-02	6.01E-03	0.00E+00	4.55E-04	2.96E-07	5.11E-07	5.45E-04	2.83E-06
P8R_0041	Phase 8 Haul Road	472947.83	4742365.49	2019.09	11.56	55.81	10.75	6.01E-02	6.01E-03	0.00E+00	4.55E-04	2.96E-07	5.11E-07	5.45E-04	2.83E-06
P8R_0042	Phase 8 Haul Road	472921.10	4742385.72	2012.25	11.56	55.81	10.75	6.01E-02	6.01E-03	0.00E+00	4.55E-04	2.96E-07	5.11E-07	5.45E-04	2.83E-06
P8R_0043	Phase 8 Haul Road	472894.36	4742405.95	2005.06	11.56	55.81	10.75	6.01E-02	6.01E-03	0.00E+00	4.55E-04	2.96E-07	5.11E-07	5.45E-04	2.83E-06
P8R_0044	Phase 8 Haul Road	472867.62	4742426.18	2002.95	11.56	55.81	10.75	6.01E-02	6.01E-03	0.00E+00	4.55E-04	2.96E-07	5.11E-07	5.45E-04	2.83E-06
P8R_0045	Phase 8 Haul Road	472840.88	4742446.41	1999.60	11.56	55.81	10.75	6.01E-02	6.01E-03	0.00E+00	4.55E-04	2.96E-07	5.11E-07	5.45E-04	2.83E-06
P8R_0046	Phase 8 Haul Road	472822.23	4742474.00	1998.27	11.56	55.81	10.75	6.01E-02	6.01E-03	0.00E+00	4.55E-04	2.96E-07	5.11E-07	5.45E-04	2.83E-06
P8R_0047	Phase 8 Haul Road	472804.59	4742502.51	1997.95	11.56	55.81	10.75	6.01E-02	6.01E-03	0.00E+00	4.55E-04	2.96E-07	5.11E-07	5.45E-04	2.83E-06
P8R_0048	Phase 8 Haul Road	472786.95	4742531.02	1996.42	11.56	55.81	10.75	6.01E-02	6.01E-03	0.00E+00	4.55E-04	2.96E-07	5.11E-07	5.45E-04	2.83E-06
P8R_0049	Phase 8 Haul Road	472769.25	4742559.47	1994.46	11.56	55.81	10.75	6.01E-02	6.01E-03	0.00E+00	4.55E-04	2.96E-07	5.11E-07	5.45E-04	2.83E-06
P8R_0050	Phase 8 Haul Road	472737.90	4742571.33	1992.19	11.56	55.81	10.75	6.01E-02	6.01E-03	0.00E+00	4.55E-04	2.96E-07	5.11E-07	5.45E-04	2.83E-06
P8R_0051	Phase 8 Haul Road	472706.54	4742583.20	1993.76	11.56	55.81	10.75	6.01E-02	6.01E-03	0.00E+00	4.55E-04	2.96E-07	5.11E-07	5.45E-04	2.83E-06
P8R_0052	Phase 8 Haul Road	472675.18	4742595.06	1993.86	11.56	55.81	10.75	6.01E-02	6.01E-03	0.00E+00	4.55E-04	2.96E-07	5.11E-07	5.45E-04	2.83E-06
P8R_0053	Phase 8 Haul Road	472643.82	4742606.93	1991.98	11.56	55.81	10.75	6.01E-02	6.01E-03	0.00E+00	4.55E-04	2.96E-07	5.11E-07	5.45E-04	2.83E-06
P8R_0054	Phase 8 Haul Road	472612.97	4742619.58	1994.68	11.56	55.81	10.75	6.01E-02	6.01E-03	0.00E+00	4.55E-04	2.96E-07	5.11E-07	5.45E-04	2.83E-06
P8R_0055	Phase 8 Haul Road	472589.40	4742643.42	1998.83	11.56	55.81	10.75	6.01E-02	6.01E-03	0.00E+00	4.55E-04	2.96E-07	5.11E-07	5.45E-04	2.83E-06
P8R_0056	Phase 8 Haul Road	472565.82	4742667.26	2003.46	11.56	55.81	10.75	6.01E-02	6.01E-03	0.00E+00	4.55E-04	2.96E-07	5.11E-07	5.45E-04	2.83E-06
P8R_0057	Phase 8 Haul Road	472542.25	4742691.10	2006.89	11.56	55.81	10.75	6.01E-02	6.01E-03	0.00E+00	4.55E-04	2.96E-07	5.11E-07	5.45E-04	2.83E-06

Agrium - Rasmussen Valley Volume Source Input

Source ID	Source Description	Easting (m)	Northing (m)	Base Elevation (m)	Release Height (ft)	Horizontal Dimension (ft)	Vertical Dimension (ft)	PM10 (lb/hr)	PM25 (lb/hr)	NO2 (lb/hr)	Al (lb/hr)	As (lb/hr)	Cd (lb/hr)	Fe (lb/hr)	Ni (lb/hr)
P8R_0058	Phase 8 Haul Road	472518.67	4742714.94	2006.84	11.56	55.81	10.75	6.01E-02	6.01E-03	0.00E+00	4.55E-04	2.96E-07	5.11E-07	5.45E-04	2.83E-06
P8R_0059	Phase 8 Haul Road	472495.10	4742738.78	2006.69	11.56	55.81	10.75	6.01E-02	6.01E-03	0.00E+00	4.55E-04	2.96E-07	5.11E-07	5.45E-04	2.83E-06
P8R_0060	Phase 8 Haul Road	472471.53	4742762.62	2008.30	11.56	55.81	10.75	6.01E-02	6.01E-03	0.00E+00	4.55E-04	2.96E-07	5.11E-07	5.45E-04	2.83E-06
P8R_0061	Phase 8 Haul Road	472447.95	4742786.46	2009.25	11.56	55.81	10.75	6.01E-02	6.01E-03	0.00E+00	4.55E-04	2.96E-07	5.11E-07	5.45E-04	2.83E-06
P8R_0062	Phase 8 Haul Road	472424.38	4742810.30	2010.23	11.56	55.81	10.75	6.01E-02	6.01E-03	0.00E+00	4.55E-04	2.96E-07	5.11E-07	5.45E-04	2.83E-06
P8R_0063	Phase 8 Haul Road	472400.80	4742834.14	2012.35	11.56	55.81	10.75	6.01E-02	6.01E-03	0.00E+00	4.55E-04	2.96E-07	5.11E-07	5.45E-04	2.83E-06
P8R_0064	Phase 8 Haul Road	472377.23	4742857.98	2014.64	11.56	55.81	10.75	6.01E-02	6.01E-03	0.00E+00	4.55E-04	2.96E-07	5.11E-07	5.45E-04	2.83E-06
P8R_0065	Phase 8 Haul Road	472353.65	4742881.82	2017.43	11.56	55.81	10.75	6.01E-02	6.01E-03	0.00E+00	4.55E-04	2.96E-07	5.11E-07	5.45E-04	2.83E-06
P8R_0066	Phase 8 Haul Road	472330.08	4742905.66	2019.58	11.56	55.81	10.75	6.01E-02	6.01E-03	0.00E+00	4.55E-04	2.96E-07	5.11E-07	5.45E-04	2.83E-06
P8R_0067	Phase 8 Haul Road	472306.50	4742929.50	2023.00	11.56	55.81	10.75	6.01E-02	6.01E-03	0.00E+00	4.55E-04	2.96E-07	5.11E-07	5.45E-04	2.83E-06
P8R_0068	Phase 8 Haul Road	472282.93	4742953.34	2025.60	11.56	55.81	10.75	6.01E-02	6.01E-03	0.00E+00	4.55E-04	2.96E-07	5.11E-07	5.45E-04	2.83E-06
P8R_0069	Phase 8 Haul Road	472259.35	4742977.18	2029.06	11.56	55.81	10.75	6.01E-02	6.01E-03	0.00E+00	4.55E-04	2.96E-07	5.11E-07	5.45E-04	2.83E-06
P8R_0070	Phase 8 Haul Road	472236.30	4743001.50	2032.90	11.56	55.81	10.75	6.01E-02	6.01E-03	0.00E+00	4.55E-04	2.96E-07	5.11E-07	5.45E-04	2.83E-06
P8R_0071	Phase 8 Haul Road	472214.69	4743027.13	2038.13	11.56	55.81	10.75	6.01E-02	6.01E-03	0.00E+00	4.55E-04	2.96E-07	5.11E-07	5.45E-04	2.83E-06
P8R_0072	Phase 8 Haul Road	472193.08	4743052.77	2042.07	11.56	55.81	10.75	6.01E-02	6.01E-03	0.00E+00	4.55E-04	2.96E-07	5.11E-07	5.45E-04	2.83E-06
P8R_0073	Phase 8 Haul Road	472171.46	4743078.40	2046.73	11.56	55.81	10.75	6.01E-02	6.01E-03	0.00E+00	4.55E-04	2.96E-07	5.11E-07	5.45E-04	2.83E-06
P8R_0074	Phase 8 Haul Road	472149.85	4743104.03	2051.09	11.56	55.81	10.75	6.01E-02	6.01E-03	0.00E+00	4.55E-04	2.96E-07	5.11E-07	5.45E-04	2.83E-06
P8R_0075	Phase 8 Haul Road	472128.24	4743129.66	2055.68	11.56	55.81	10.75	6.01E-02	6.01E-03	0.00E+00	4.55E-04	2.96E-07	5.11E-07	5.45E-04	2.83E-06
P8R_0076	Phase 8 Haul Road	472106.63	4743155.30	2058.30	11.56	55.81	10.75	6.01E-02	6.01E-03	0.00E+00	4.55E-04	2.96E-07	5.11E-07	5.45E-04	2.83E-06
P8R_0077	Phase 8 Haul Road	472085.01	4743180.93	2060.78	11.56	55.81	10.75	6.01E-02	6.01E-03	0.00E+00	4.55E-04	2.96E-07	5.11E-07	5.45E-04	2.83E-06
P8R_0078	Phase 8 Haul Road	472063.40	4743206.56	2064.38	11.56	55.81	10.75	6.01E-02	6.01E-03	0.00E+00	4.55E-04	2.96E-07	5.11E-07	5.45E-04	2.83E-06
P8R_0079	Phase 8 Haul Road	472032.73	4743219.52	2061.54	11.56	55.81	10.75	6.01E-02	6.01E-03	0.00E+00	4.55E-04	2.96E-07	5.11E-07	5.45E-04	2.83E-06
P8R_0080	Phase 8 Haul Road	472001.48	4743231.65	2057.74	11.56	55.81	10.75	6.01E-02	6.01E-03	0.00E+00	4.55E-04	2.96E-07	5.11E-07	5.45E-04	2.83E-06
P8R_0081	Phase 8 Haul Road	471970.22	4743243.78	2062.21	11.56	55.81	10.75	6.01E-02	6.01E-03	0.00E+00	4.55E-04	2.96E-07	5.11E-07	5.45E-04	2.83E-06
P8R_0082	Phase 8 Haul Road	471938.96	4743255.90	2069.25	11.56	55.81	10.75	6.01E-02	6.01E-03	0.00E+00	4.55E-04	2.96E-07	5.11E-07	5.45E-04	2.83E-06
P8R_0083	Phase 8 Haul Road	471907.70	4743268.03	2072.51	11.56	55.81	10.75	6.01E-02	6.01E-03	0.00E+00	4.55E-04	2.96E-07	5.11E-07	5.45E-04	2.83E-06
P8R_0084	Phase 8 Haul Road	471876.45	4743280.16	2071.95	11.56	55.81	10.75	6.01E-02	6.01E-03	0.00E+00	4.55E-04	2.96E-07	5.11E-07	5.45E-04	2.83E-06
P8R_0085	Phase 8 Haul Road	471845.19	4743292.29	2068.94	11.56	55.81	10.75	6.01E-02	6.01E-03	0.00E+00	4.55E-04	2.96E-07	5.11E-07	5.45E-04	2.83E-06
P8R_0086	Phase 8 Haul Road	471813.93	4743304.42	2063.29	11.56	55.81	10.75	6.01E-02	6.01E-03	0.00E+00	4.55E-04	2.96E-07	5.11E-07	5.45E-04	2.83E-06
P8R_0087	Phase 8 Haul Road	471782.67	4743316.55	2058.84	11.56	55.81	10.75	6.01E-02	6.01E-03	0.00E+00	4.55E-04	2.96E-07	5.11E-07	5.45E-04	2.83E-06
P8R_0088	Phase 8 Haul Road	471750.38	4743325.54	2054.78	11.56	55.81	10.75	6.01E-02	6.01E-03	0.00E+00	4.55E-04	2.96E-07	5.11E-07	5.45E-04	2.83E-06
P8R_0089	Phase 8 Haul Road	471718.05	4743334.44	2050.42	11.56	55.81	10.75	6.01E-02	6.01E-03	0.00E+00	4.55E-04	2.96E-07	5.11E-07	5.45E-04	2.83E-06
P8R_0090	Phase 8 Haul Road	471685.73	4743343.33	2048.06	11.56	55.81	10.75	6.01E-02	6.01E-03	0.00E+00	4.55E-04	2.96E-07	5.11E-07	5.45E-04	2.83E-06
P8R_0091	Phase 8 Haul Road	471653.40	4743352.22	2046.47	11.56	55.81	10.75	6.01E-02	6.01E-03	0.00E+00	4.55E-04	2.96E-07	5.11E-07	5.45E-04	2.83E-06
P8R_0092	Phase 8 Haul Road	471621.07	4743361.11	2041.92	11.56	55.81	10.75	6.01E-02	6.01E-03	0.00E+00	4.55E-04	2.96E-07	5.11E-07	5.45E-04	2.83E-06
P8R_0093	Phase 8 Haul Road	471588.74	4743370.00	2036.47	11.56	55.81	10.75	6.01E-02	6.01E-03	0.00E+00	4.55E-04	2.96E-07	5.11E-07	5.45E-04	2.83E-06
P8R_0094	Phase 8 Haul Road	471556.42	4743378.89	2030.85	11.56	55.81	10.75	6.01E-02	6.01E-03	0.00E+00	4.55E-04	2.96E-07	5.11E-07	5.45E-04	2.83E-06
P8R_0095	Phase 8 Haul Road	471524.09	4743387.78	2030.83	11.56	55.81	10.75	6.01E-02	6.01E-03	0.00E+00	4.55E-04	2.96E-07	5.11E-07	5.45E-04	2.83E-06
P8R_0096	Phase 8 Haul Road	471491.76	4743396.67	2029.69	11.56	55.81	10.75	6.01E-02	6.01E-03	0.00E+00	4.55E-04	2.96E-07	5.11E-07	5.45E-04	2.83E-06
P8R_0097	Phase 8 Haul Road	471459.43	4743405.56	2027.98	11.56	55.81	10.75	6.01E-02	6.01E-03	0.00E+00	4.55E-04	2.96E-07	5.11E-07	5.45E-04	2.83E-06
P8R_0098	Phase 8 Haul Road	471428.05	4743417.13	2029.67	11.56	55.81	10.75	6.01E-02	6.01E-03	0.00E+00	4.55E-04	2.96E-07	5.11E-07	5.45E-04	2.83E-06
P8R_0099	Phase 8 Haul Road	471397.26	4743430.41	2033.21	11.56	55.81	10.75	6.01E-02	6.01E-03	0.00E+00	4.55E-04	2.96E-07	5.11E-07	5.45E-04	2.83E-06
P8R_0100	Phase 8 Haul Road	471366.48	4743443.69	2036.04	11.56	55.81	10.75	6.01E-02	6.01E-03	0.00E+00	4.55E-04	2.96E-07	5.11E-07	5.45E-04	2.83E-06
P8R_0101	Phase 8 Haul Road	471335.69	4743456.97	2041.78	11.56	55.81	10.75	6.01E-02	6.01E-03	0.00E+00	4.55E-04	2.96E-07	5.11E-07	5.45E-04	2.83E-06
P8R_0102	Phase 8 Haul Road	471304.90	4743470.25	2041.49	11.56	55.81	10.75	6.01E-02	6.01E-03	0.00E+00	4.55E-04	2.96E-07	5.11E-07	5.45E-04	2.83E-06
P8R_0103	Phase 8 Haul Road	471274.12	4743483.53	2037.16	11.56	55.81	10.75	6.01E-02	6.01E-03	0.00E+00	4.55E-04	2.96E-07	5.11E-07	5.45E-04	2.83E-06
P8R_0104	Phase 8 Haul Road	471243.33	4743496.81	2039.16	11.56	55.81	10.75	6.01E-02	6.01E-03	0.00E+00	4.55E-04	2.96E-07	5.11E-07	5.45E-04	2.83E-06
P8R_0105	Phase 8 Haul Road	471211.13	4743505.55	2038.77	11.56	55.81	10.75	6.01E-02	6.01E-03	0.00E+00	4.55E-04	2.96E-07	5.11E-07	5.45E-04	2.83E-06
P8R_0106	Phase 8 Haul Road	471178.25	4743512.12	2034.29	11.56	55.81	10.75	6.01E-02	6.01E-03	0.00E+00	4.55E-04	2.96E-07	5.11E-07	5.45E-04	2.83E-06
P8R_0107	Phase 8 Haul Road	471145.37	4743518.70	2030.24	11.56	55.81	10.75	6.01E-02	6.01E-03	0.00E+00	4.55E-04	2.96E-07	5.11E-07	5.45E-04	2.83E-06
P8R_0108	Phase 8 Haul Road	471112.50	4743525.27	2026.87	11.56	55.81	10.75	6.01E-02	6.01E-03	0.00E+00	4.55E-04	2.96E-07	5.11E-07	5.45E-04	2.83E-06
P8R_0109	Phase 8 Haul Road	471079.17	4743528.66	2023.10	11.56	55.81	10.75	6.01E-02	6.01E-03	0.00E+00	4.55E-04	2.96E-07	5.11E-07	5.45E-04	2.83E-06
P8R_0110	Phase 8 Haul Road	471045.76	4743531.52	2019.31	11.56	55.81	10.75	6.01E-02	6.01E-03	0.00E+00	4.55E-04	2.96E-07	5.11E-07	5.45E-04	2.83E-06
P8R_0111	Phase 8 Haul Road	471012.35	4743534.39	2013.62	11.56	55.81	10.75	6.01E-02	6.01E-03	0.00E+00	4.55E-04	2.96E-07	5.11E-07	5.45E-04	2.83E-06

Agrium - Rasmussen Valley Volume Source Input

Source ID	Source Description	Easting (m)	Northing (m)	Base Elevation (m)	Release Height (ft)	Horizontal Dimension (ft)	Vertical Dimension (ft)	PM10 (lb/hr)	PM25 (lb/hr)	NO2 (lb/hr)	Al (lb/hr)	As (lb/hr)	Cd (lb/hr)	Fe (lb/hr)	Ni (lb/hr)
P8R_0112	Phase 8 Haul Road	470978.95	4743537.25	2007.62	11.56	55.81	10.75	6.01E-02	6.01E-03	0.00E+00	4.55E-04	2.96E-07	5.11E-07	5.45E-04	2.83E-06
P8R_0113	Phase 8 Haul Road	470950.59	4743550.43	2009.58	11.56	55.81	10.75	6.01E-02	6.01E-03	0.00E+00	4.55E-04	2.96E-07	5.11E-07	5.45E-04	2.83E-06
P8R_0114	Phase 8 Haul Road	470927.85	4743575.07	2014.93	11.56	55.81	10.75	6.01E-02	6.01E-03	0.00E+00	4.55E-04	2.96E-07	5.11E-07	5.45E-04	2.83E-06
P8R_0115	Phase 8 Haul Road	470905.11	4743599.70	2014.71	11.56	55.81	10.75	6.01E-02	6.01E-03	0.00E+00	4.55E-04	2.96E-07	5.11E-07	5.45E-04	2.83E-06
P8R_0116	Phase 8 Haul Road	470882.37	4743624.34	2013.50	11.56	55.81	10.75	6.01E-02	6.01E-03	0.00E+00	4.55E-04	2.96E-07	5.11E-07	5.45E-04	2.83E-06
P8R_0117	Phase 8 Haul Road	470859.02	4743647.40	2016.13	11.56	55.81	10.75	6.01E-02	6.01E-03	0.00E+00	4.55E-04	2.96E-07	5.11E-07	5.45E-04	2.83E-06
P8R_0118	Phase 8 Haul Road	470825.63	4743644.36	2023.61	11.56	55.81	10.75	6.01E-02	6.01E-03	0.00E+00	4.55E-04	2.96E-07	5.11E-07	5.45E-04	2.83E-06
P8R_0119	Phase 8 Haul Road	470792.24	4743641.33	2032.48	11.56	55.81	10.75	6.01E-02	6.01E-03	0.00E+00	4.55E-04	2.96E-07	5.11E-07	5.45E-04	2.83E-06
P8R_0120	Phase 8 Haul Road	470758.85	4743638.29	2033.74	11.56	55.81	10.75	6.01E-02	6.01E-03	0.00E+00	4.55E-04	2.96E-07	5.11E-07	5.45E-04	2.83E-06
P8R_0121	Phase 8 Haul Road	470725.46	4743635.26	2031.60	11.56	55.81	10.75	6.01E-02	6.01E-03	0.00E+00	4.55E-04	2.96E-07	5.11E-07	5.45E-04	2.83E-06
P8R_0122	Phase 8 Haul Road	470703.48	4743659.09	2035.81	11.56	55.81	10.75	6.01E-02	6.01E-03	0.00E+00	4.55E-04	2.96E-07	5.11E-07	5.45E-04	2.83E-06
P8R_0123	Phase 8 Haul Road	470682.49	4743685.23	2035.10	11.56	55.81	10.75	6.01E-02	6.01E-03	0.00E+00	4.55E-04	2.96E-07	5.11E-07	5.45E-04	2.83E-06
P8R_0124	Phase 8 Haul Road	470661.49	4743711.37	2035.60	11.56	55.81	10.75	6.01E-02	6.01E-03	0.00E+00	4.55E-04	2.96E-07	5.11E-07	5.45E-04	2.83E-06
P8R_0125	Phase 8 Haul Road	470640.49	4743737.51	2040.16	11.56	55.81	10.75	6.01E-02	6.01E-03	0.00E+00	4.55E-04	2.96E-07	5.11E-07	5.45E-04	2.83E-06
P8R_0126	Phase 8 Haul Road	470619.49	4743763.65	2041.13	11.56	55.81	10.75	6.01E-02	6.01E-03	0.00E+00	4.55E-04	2.96E-07	5.11E-07	5.45E-04	2.83E-06
P8R_0127	Phase 8 Haul Road	470601.43	4743791.62	2037.59	11.56	55.81	10.75	6.01E-02	6.01E-03	0.00E+00	4.55E-04	2.96E-07	5.11E-07	5.45E-04	2.83E-06
P8R_0128	Phase 8 Haul Road	470599.15	4743823.47	2038.93	11.56	55.81	10.75	6.01E-02	6.01E-03	0.00E+00	4.55E-04	2.96E-07	5.11E-07	5.45E-04	2.83E-06
P8R_0129	Phase 8 Haul Road	470613.66	4743853.17	2044.94	11.56	55.81	10.75	6.01E-02	6.01E-03	0.00E+00	4.55E-04	2.96E-07	5.11E-07	5.45E-04	2.83E-06
P8R_0130	Phase 8 Haul Road	470611.88	4743885.73	2053.69	11.56	55.81	10.75	6.01E-02	6.01E-03	0.00E+00	4.55E-04	2.96E-07	5.11E-07	5.45E-04	2.83E-06
P8R_0131	Phase 8 Haul Road	470583.67	4743899.36	2058.76	11.56	55.81	10.75	6.01E-02	6.01E-03	0.00E+00	4.55E-04	2.96E-07	5.11E-07	5.45E-04	2.83E-06
P8R_0132	Phase 8 Haul Road	470550.97	4743891.97	2059.23	11.56	55.81	10.75	6.01E-02	6.01E-03	0.00E+00	4.55E-04	2.96E-07	5.11E-07	5.45E-04	2.83E-06
P8R_0133	Phase 8 Haul Road	470519.11	4743881.55	2064.45	11.56	55.81	10.75	6.01E-02	6.01E-03	0.00E+00	4.55E-04	2.96E-07	5.11E-07	5.45E-04	2.83E-06
P8R_0134	Phase 8 Haul Road	470488.06	4743892.32	2069.90	11.56	55.81	10.75	6.01E-02	6.01E-03	0.00E+00	4.55E-04	2.96E-07	5.11E-07	5.45E-04	2.83E-06
P8R_0135	Phase 8 Haul Road	470464.96	4743916.40	2074.51	11.56	55.81	10.75	6.01E-02	6.01E-03	0.00E+00	4.55E-04	2.96E-07	5.11E-07	5.45E-04	2.83E-06
P8R_0136	Phase 8 Haul Road	470442.30	4743941.12	2073.33	11.56	55.81	10.75	6.01E-02	6.01E-03	0.00E+00	4.55E-04	2.96E-07	5.11E-07	5.45E-04	2.83E-06
P8R_0137	Phase 8 Haul Road	470428.94	4743955.70	2073.65	11.56	55.81	10.75	6.01E-02	6.01E-03	0.00E+00	4.55E-04	2.96E-07	5.11E-07	5.45E-04	2.83E-06
PILE_2	North Storage Pile	471176.13	4743387.19	2012.49	115.0	205.4	53.49	2.31E-03	3.47E-04	0.00E+00	1.79E-05	1.30E-08	4.10E-08	2.04E-05	1.25E-07
PILE_5	Central Storage Pile	471679.76	4743244.41	2036.33	115.0	205.4	53.49	2.31E-03	3.47E-04	0.00E+00	1.79E-05	1.30E-08	4.10E-08	2.04E-05	1.25E-07
PILE_8	South Storage Pile	473009.53	4742142.93	2001.00	115.0	205.4	53.49	2.31E-03	3.47E-04	0.00E+00	1.79E-05	1.30E-08	4.10E-08	2.04E-05	1.25E-07
LOAD_2	Load/Unload North Storage Pile	471176.13	4743387.19	2012.49	13.6	8.14	3.16	1.76E-01	2.66E-02	0.00E+00	1.41E-03	1.21E-06	6.18E-06	1.48E-03	1.18E-05
LOAD_5	Load/Unload Central Storage Pile	471679.76	4743244.41	2036.33	13.6	8.14	3.16	1.76E-01	2.66E-02	0.00E+00	1.41E-03	1.21E-06	6.18E-06	1.48E-03	1.18E-05
LOAD_8	Load/Unload South Storage Pile	473009.53	4742142.93	2001.00	13.6	8.14	3.16	1.76E-01	2.66E-02	0.00E+00	1.41E-03	1.21E-06	6.18E-06	1.48E-03	1.18E-05

Notes : 1) Each haul road includes emissions from haul trucks for overburden, ore, and growth media.

2) Each pile source includes emissions from storage of overburden, ore, and growth media. All materials were conservatively assumed to be centrally colocated for each phase of the operation.

3) Each load source includes emissions from loading and unloading of overburden, ore, and growth media.

4) See attached calculation for basis of release height and initial dispersion terms.

Agrium - Rasmussen Valley Area Source Input

Source ID	Source Description	Easting (m)	Northing (m)	Base Elevation (m)	Height (ft)	Easterly Length (ft)	Northerly Length (ft)	Angle from North	Initial Vert. Dimension (ft)	PM10 (lb/hr)	PM25 (lb/hr)	NO2 (lb/hr)	Al (lb/hr)	As (lb/hr)	Cd (lb/hr)	Fe (lb/hr)	Ni (lb/hr)
PIT_2	Phase 2 Pit	470965.98	4743666.36	2032.23	15.00	1000.00	500.00	0.00	15.00	2.55E-01	9.47E-02	7.54E-01	2.13E-03	2.94E-06	7.59E-06	2.58E-03	2.92E-05
PIT_5	Phase 5 Pit	472175.84	4743215.99	2074.61	15.00	1500.00	500.00	40.00	15.00	2.55E-01	9.47E-02	7.54E-01	2.13E-03	2.94E-06	7.59E-06	2.58E-03	2.92E-05
PIT_8	Phase 8 Pit	473401.49	4742096.61	2049.5	15.00	1000.00	500.00	40.00	15.00	2.55E-01	9.47E-02	7.54E-01	2.13E-03	2.94E-06	7.59E-06	2.58E-03	2.92E-05
									Total Fugitive Source Emissions per Phase:	8.67E+00	9.45E-01	7.54E-01	6.58E-02	4.47E-05	8.38E-05	7.87E-02	4.29E-04
									Grand Total per Phase:	8.88E+00	1.15E+00	4.81E+00	6.58E-02	4.47E-05	8.38E-05	7.87E-02	4.29E-04

Notes: 1) Each pit includes emissions from drilling, blasting, screening, and truck loading.

2) Release height conservatively assume equal to loader dump height. Blasting emissions would have higher release.

3) Easterly and northerly lenghts based upon footprint of mine phase

Agrium - Lane Creek Point Source Model Input (NAD83, Z12)- 10/29/13

Source ID	Source Description	Easting (m)	Northing (m)	Base Elevation (m)	Stack Height (ft)	Temp. (°F)	Exit Velocity (ft/sec)	Stack Diameter (ft)	PM10 (lb/hr)	PM25 (lb/hr)	NO2 (lb/hr)
LC_GEN_1	Diesel Generator	473972.24	4743666.04	1975.34	6.00	797.0	152.73	0.34	0.105	0.105	1.222
LC_GEN_2	Diesel Generator	473977.92	4743648.99	1975.16	6.00	797.0	152.73	0.34	0.105	0.105	1.222
LC_LP_ORE	Diesel Light Plant (ore stockpile)	473999.00	4742427.00	2011.40	4.00	800.0	114.28	0.09	0.019	0.019	0.173
LC_LP_FAC	Diesel Light Plant (facilities area)	473991.18	4743712.13	1972.23	4.00	800.0	114.28	0.09	0.019	0.019	0.173
LC_LPNSA	Diesel Light Plant (north OSA area)	473677.00	4744105.00	1984.01	4.00	800.0	114.28	0.09	0.019	0.019	0.173
LC_LPSSA	Diesel Light Plant (south OSA area)	473967.28	4743004.79	2002.32	4.00	800.0	114.28	0.09	0.019	0.019	0.173
LC_LPIT1	Diesel Light Plant (pit area -1)	473549.00	4743567.00	2090.49	4.00	800.0	114.28	0.09	0.019	0.019	0.173
LC_LPIT2	Diesel Light Plant (pit area -2)	473710.00	4743238.00	2026.68	4.00	800.0	114.28	0.09	0.019	0.019	0.173
LC_LPIT3	Diesel Light Plant (pit area -3)	474175.00	4743282.00	1979.01	4.00	800.0	114.28	0.09	0.019	0.019	0.173
LC_LPIT4	Diesel Light Plant (pit area -4)	474036.16	4743521.33	1979.96	4.00	800.0	114.28	0.09	0.019	0.019	0.173
LC_LPIT5	Diesel Light Plant (pit area -5)	473695.00	4743960.00	1989.21	4.00	800.0	114.28	0.09	0.019	0.019	0.173

Agrium - Lane Creek Volume Source Input

Source ID	Source Description	Easting (m)	Northing (m)	Base Elevation (m)	Release Height (ft)	Horizontal Dimension (ft)	Vertical Dimension (ft)	PM10 (lb/hr)	PM25 (lb/hr)
LC_RD1_1	Pit to N. OSA Road - Segment 1	473835.64	4743608.09	2014.65	13.6	46.51	12.65	1.85E-01	1.85E-02
LC_RD1_2	Pit to N. OSA Road - Segment 2	473868.57	4743556.79	2008.39	13.6	46.51	12.65	1.85E-01	1.85E-02
LC_RD1_3	Pit to N. OSA Road - Segment 3	473901.50	4743505.49	2004.71	13.6	46.51	12.65	1.85E-01	1.85E-02
LC_RD1_4	Pit to N. OSA Road - Segment 4	473934.43	4743454.19	2003.73	13.6	46.51	12.65	1.85E-01	1.85E-02
LC_RD1_5	Pit to N. OSA Road - Segment 5	473976.46	4743411.12	2000.53	13.6	46.51	12.65	1.85E-01	1.85E-02
LC_RD1_6	Pit to N. OSA Road - Segment 6	474027.44	4743426.10	1989.55	13.6	46.51	12.65	1.85E-01	1.85E-02
LC_RD1_7	Pit to N. OSA Road - Segment 7	474024.17	4743483.24	1984.06	13.6	46.51	12.65	1.85E-01	1.85E-02
LC_RD1_8	Pit to N. OSA Road - Segment 8	473992.12	4743535.10	1984.14	13.6	46.51	12.65	1.85E-01	1.85E-02
LC_RD1_9	Pit to N. OSA Road - Segment 9	473959.55	4743586.60	1982.48	13.6	46.51	12.65	1.85E-01	1.85E-02
LC_RD110	Pit to N. OSA Road - Segment 10	473923.05	4743635.43	1983.94	13.6	46.51	12.65	1.85E-01	1.85E-02
LC_RD111	Pit to N. OSA Road - Segment 11	473886.56	4743684.26	1985.09	13.6	46.51	12.65	1.85E-01	1.85E-02
LC_RD112	Pit to N. OSA Road - Segment 12	473850.06	4743733.08	1991.74	13.6	46.51	12.65	1.85E-01	1.85E-02
LC_RD113	Pit to N. OSA Road - Segment 13	473813.56	4743781.91	1996.28	13.6	46.51	12.65	1.85E-01	1.85E-02
LC_RD114	Pit to N. OSA Road - Segment 14	473777.07	4743830.74	1992.98	13.6	46.51	12.65	1.85E-01	1.85E-02
LC_RD115	Pit to N. OSA Road - Segment 15	473757.98	4743856.27	1989.86	13.6	46.51	12.65	1.85E-01	1.85E-02
LC_RD2_1	Pit to S. OSA Road - Segment 1	473816.27	4743597.04	2023.13	13.6	46.51	12.65	1.94E-01	1.94E-02
LC_RD2_2	Pit to S. OSA Road - Segment 2	473849.42	4743545.88	2015.44	13.6	46.51	12.65	1.94E-01	1.94E-02
LC_RD2_3	Pit to S. OSA Road - Segment 3	473882.57	4743494.72	2012.02	13.6	46.51	12.65	1.94E-01	1.94E-02
LC_RD2_4	Pit to S. OSA Road - Segment 4	473915.72	4743443.56	2011.82	13.6	46.51	12.65	1.94E-01	1.94E-02
LC_RD2_5	Pit to S. OSA Road - Segment 5	473956.92	4743399.35	2008.18	13.6	46.51	12.65	1.94E-01	1.94E-02
LC_RD2_6	Pit to S. OSA Road - Segment 6	474002.66	4743359.05	2003.11	13.6	46.51	12.65	1.94E-01	1.94E-02
LC_RD2_7	Pit to S. OSA Road - Segment 7	474047.04	4743317.65	1996.22	13.6	46.51	12.65	1.94E-01	1.94E-02
LC_RD2_8	Pit to S. OSA Road - Segment 8	474076.88	4743264.49	1991.66	13.6	46.51	12.65	1.94E-01	1.94E-02
LC_RD2_9	Pit to S. OSA Road - Segment 9	474091.61	4743206.81	1994.78	13.6	46.51	12.65	1.94E-01	1.94E-02
LC_RD210	Pit to S. OSA Road - Segment 10	474076.15	4743149.63	1993.02	13.6	46.51	12.65	1.94E-01	1.94E-02
LC_RD211	Pit to S. OSA Road - Segment 11	474055.61	4743105.25	1996.05	13.6	46.51	12.65	1.94E-01	1.94E-02
LC_RD3_1	Pit to Ore Stockpile - Segment 1	473824.60	4743602.63	2019.36	13.6	46.51	12.65	5.59E-02	5.59E-03
LC_RD3_2	Pit to Ore Stockpile - Segment 2	473857.59	4743551.36	2012.46	13.6	46.51	12.65	5.59E-02	5.59E-03
LC_RD3_3	Pit to Ore Stockpile - Segment 3	473890.58	4743500.10	2008.55	13.6	46.51	12.65	5.59E-02	5.59E-03
LC_RD3_4	Pit to Ore Stockpile - Segment 4	473923.57	4743448.84	2007.96	13.6	46.51	12.65	5.59E-02	5.59E-03
LC_RD3_5	Pit to Ore Stockpile - Segment 5	473963.68	4743403.88	2005.32	13.6	46.51	12.65	5.59E-02	5.59E-03
LC_RD3_6	Pit to Ore Stockpile - Segment 6	474010.51	4743364.85	1999.86	13.6	46.51	12.65	5.59E-02	5.59E-03
LC_RD3_7	Pit to Ore Stockpile - Segment 7	474055.15	4743323.93	1994.21	13.6	46.51	12.65	5.59E-02	5.59E-03
LC_RD3_8	Pit to Ore Stockpile - Segment 8	474086.79	4743271.83	1989.78	13.6	46.51	12.65	5.59E-02	5.59E-03
LC_RD3_9	Pit to Ore Stockpile - Segment 9	474100.11	4743214.59	1993.14	13.6	46.51	12.65	5.59E-02	5.59E-03
LC_RD310	Pit to Ore Stockpile - Segment 10	474100.11	4743153.63	1990.49	13.6	46.51	12.65	5.59E-02	5.59E-03

Agrium - Lane Creek Volume Source Input

Source ID	Source Description	Easting (m)	Northing (m)	Base Elevation (m)	Release Height (ft)	Horizontal Dimension (ft)	Vertical Dimension (ft)	PM10 (lb/hr)	PM25 (lb/hr)
LC_RD311	Pit to Ore Stockpile - Segment 11	474099.26	4743092.68	1991.00	13.6	46.51	12.65	5.59E-02	5.59E-03
LC_RD312	Pit to Ore Stockpile - Segment 12	474098.35	4743031.73	1990.70	13.6	46.51	12.65	5.59E-02	5.59E-03
LC_RD313	Pit to Ore Stockpile - Segment 13	474097.44	4742970.77	1989.62	13.6	46.51	12.65	5.59E-02	5.59E-03
LC_RD314	Pit to Ore Stockpile - Segment 14	474086.53	4742910.92	1989.88	13.6	46.51	12.65	5.59E-02	5.59E-03
LC_RD315	Pit to Ore Stockpile - Segment 15	474074.40	4742851.17	1991.21	13.6	46.51	12.65	5.59E-02	5.59E-03
LC_RD316	Pit to Ore Stockpile - Segment 16	474062.69	4742791.35	1993.75	13.6	46.51	12.65	5.59E-02	5.59E-03
LC_RD317	Pit to Ore Stockpile - Segment 17	474050.98	4742731.53	1995.17	13.6	46.51	12.65	5.59E-02	5.59E-03
LC_RD318	Pit to Ore Stockpile - Segment 18	474039.26	4742671.70	1996.90	13.6	46.51	12.65	5.59E-02	5.59E-03
LC_RD4_1	N. OSA to Growth Pile - Segment 1	473779.54	4743840.80	1990.67	13.6	46.51	12.65	1.21E-02	1.21E-03
LC_RD4_2	N. OSA to Growth Pile - Segment 2	473821.19	4743796.29	1991.73	13.6	46.51	12.65	1.21E-02	1.21E-03
LC_RD4_3	N. OSA to Growth Pile - Segment 3	473856.40	4743746.56	1987.86	13.6	46.51	12.65	1.21E-02	1.21E-03
LC_RD4_4	N. OSA to Growth Pile - Segment 4	473891.26	4743696.55	1983.13	13.6	46.51	12.65	1.21E-02	1.21E-03
LC_RD4_5	N. OSA to Growth Pile - Segment 5	473926.12	4743646.54	1982.43	13.6	46.51	12.65	1.21E-02	1.21E-03
LC_RD4_6	N. OSA to Growth Pile - Segment 6	473960.98	4743596.53	1981.19	13.6	46.51	12.65	1.21E-02	1.21E-03
LC_RD4_7	N. OSA to Growth Pile - Segment 7	473994.97	4743545.94	1982.78	13.6	46.51	12.65	1.21E-02	1.21E-03
LC_RD4_8	N. OSA to Growth Pile - Segment 8	474026.92	4743494.21	1982.95	13.6	46.51	12.65	1.21E-02	1.21E-03
LC_RD4_9	N. OSA to Growth Pile - Segment 9	474047.53	4743436.84	1986.23	13.6	46.51	12.65	1.21E-02	1.21E-03
LC_RD410	N. OSA to Growth Pile - Segment 10	474068.14	4743379.47	1985.64	13.6	46.51	12.65	1.21E-02	1.21E-03
LC_RD411	N. OSA to Growth Pile - Segment 11	474088.75	4743322.10	1987.73	13.6	46.51	12.65	1.21E-02	1.21E-03
LC_RD412	N. OSA to Growth Pile - Segment 12	474109.37	4743264.73	1986.58	13.6	46.51	12.65	1.21E-02	1.21E-03
LC_RD413	N. OSA to Growth Pile - Segment 13	474111.56	4743204.23	1991.37	13.6	46.51	12.65	1.21E-02	1.21E-03
LC_RD414	N. OSA to Growth Pile - Segment 14	474148.09	4743163.43	1985.65	13.6	46.51	12.65	1.21E-02	1.21E-03
LC_RD415	N. OSA to Growth Pile - Segment 15	474209.02	4743161.48	1982.44	13.6	46.51	12.65	1.21E-02	1.21E-03
LC_RD416	N. OSA to Growth Pile - Segment 16	474261.47	4743159.81	1979.46	13.6	46.51	12.65	1.21E-02	1.21E-03
LC_RD417	N. OSA to Growth Pile - Segment 17	473831.14	4743604.73	2016.80	13.6	46.51	12.65	1.21E-02	1.21E-03
LC_RD5_1	Pit to Growth Pile - Segment 1	473863.64	4743553.16	2010.30	13.6	46.51	12.65	2.03E-02	2.03E-03
LC_RD5_2	Pit to Growth Pile - Segment 2	473896.14	4743501.58	2006.75	13.6	46.51	12.65	2.03E-02	2.03E-03
LC_RD5_3	Pit to Growth Pile - Segment 3	473929.21	4743450.39	2005.61	13.6	46.51	12.65	2.03E-02	2.03E-03
LC_RD5_4	Pit to Growth Pile - Segment 4	473970.85	4743406.45	2002.87	13.6	46.51	12.65	2.03E-02	2.03E-03
LC_RD5_5	Pit to Growth Pile - Segment 5	474019.31	4743369.51	1996.79	13.6	46.51	12.65	2.03E-02	2.03E-03
LC_RD5_6	Pit to Growth Pile - Segment 6	474064.99	4743330.43	1991.39	13.6	46.51	12.65	2.03E-02	2.03E-03
LC_RD5_7	Pit to Growth Pile - Segment 7	474093.19	4743276.38	1988.62	13.6	46.51	12.65	2.03E-02	2.03E-03
LC_RD5_8	Pit to Growth Pile - Segment 8	474106.20	4743218.61	1991.84	13.6	46.51	12.65	2.03E-02	2.03E-03
LC_RD5_9	Pit to Growth Pile - Segment 9	474123.55	4743164.84	1987.98	13.6	46.51	12.65	2.03E-02	2.03E-03
LC_RD510	Pit to Growth Pile - Segment 10	474181.34	4743156.66	1983.75	13.6	46.51	12.65	2.03E-02	2.03E-03
LC_RD511	Pit to Growth Pile - Segment 11	474242.30	4743156.03	1981.02	13.6	46.51	12.65	2.03E-02	2.03E-03

Agrium - Lane Creek Volume Source Input

Source ID	Source Description	Easting (m)	Northing (m)	Base Elevation (m)	Release Height (ft)	Horizontal Dimension (ft)	Vertical Dimension (ft)	PM10 (lb/hr)	PM25 (lb/hr)
LC_RD512	Pit to Growth Pile - Segment 12	474069.45	4743131.36	1994.08	13.6	46.51	12.65	2.03E-02	2.03E-03
LC_RD6_1	S OSA to Growth Pile - Segment 1	474117.78	4743153.97	1988.54	13.6	46.51	12.65	1.02E-02	1.02E-03
LC_RD6_2	S OSA to Growth Pile - Segment 2	474178.69	4743151.37	1984.00	13.6	46.51	12.65	1.02E-02	1.02E-03
LC_RD6_3	S OSA to Growth Pile - Segment 3	474239.59	4743148.76	1981.57	13.6	46.51	12.65	1.02E-02	1.02E-03
LC_RD6_4	S OSA to Growth Pile - Segment 4	474275.95	4743147.20	1978.65	13.6	46.51	12.65	1.02E-02	1.02E-03
LC_RD6_5	S OSA to Growth Pile - Segment 5	474028.18	4742674.99	1997.65	13.6	46.51	12.65	1.02E-02	1.02E-03
LC_RD7_1	Ore Stockpile to Growth Pile - Seg 1	474082.89	4742701.87	1992.29	13.6	46.51	12.65	1.32E-02	1.32E-03
LC_RD7_2	Ore Stockpile to Growth Pile - Seg 2	474115.25	4742751.50	1988.89	13.6	46.51	12.65	1.32E-02	1.32E-03
LC_RD7_3	Ore Stockpile to Growth Pile - Seg 3	474122.10	4742810.71	1988.29	13.6	46.51	12.65	1.32E-02	1.32E-03
LC_RD7_4	Ore Stockpile to Growth Pile - Seg 4	474121.56	4742871.66	1988.62	13.6	46.51	12.65	1.32E-02	1.32E-03
LC_RD7_5	Ore Stockpile to Growth Pile - Seg 5	474121.02	4742932.62	1987.84	13.6	46.51	12.65	1.32E-02	1.32E-03
LC_RD7_6	Ore Stockpile to Growth Pile - Seg 6	474121.26	4742993.58	1988.56	13.6	46.51	12.65	1.32E-02	1.32E-03
LC_RD7_7	Ore Stockpile to Growth Pile - Seg 7	474121.75	4743054.54	1988.53	13.6	46.51	12.65	1.32E-02	1.32E-03
LC_RD7_8	Ore Stockpile to Growth Pile - Seg 8	474122.70	4743115.49	1988.61	13.6	46.51	12.65	1.32E-02	1.32E-03
LC_RD7_9	Ore Stockpile to Growth Pile - Seg 9	474161.17	4743144.76	1985.26	13.6	46.51	12.65	1.32E-02	1.32E-03
LC_RD710	Ore Stockpile to Growth Pile - Seg 10	474222.07	4743141.98	1982.79	13.6	46.51	12.65	1.32E-02	1.32E-03
LC_RD711	Ore Stockpile to Growth Pile - Seg 11	474274.34	4743139.60	1979.01	13.6	46.51	12.65	1.32E-02	1.32E-03
LC_NOSAP	North OSA Pile	473717.69	4744039.28	1986.16	135	279.07	62.79	7.70E-01	1.16E-01
LC_SOSAP	South OSA Pile	473994.51	4742866.66	1995.37	115	279.07	53.49	7.70E-01	1.16E-01
LC_ORE_P	Ore Pile	474027.15	4742456.12	2003.51	45	148.00	20.93	1.51E+00	2.27E-01
LC_GRWTH	Growth Media Pile	474411.96	4743225.56	1973.52	25	139.53	11.63	2.82E-01	4.25E-02
LC_NOSAT	North OSA Truck Load/Unload	473718.21	4743994.03	1987.49	14	8.14	3.16	3.30E-01	5.00E-02
LC_SOSAT	South OSA Truck Load/Unload	473994.45	4742922.39	1994.75	14	8.14	3.16	3.64E-01	5.51E-02
LC_ORE_T	Ore Truck Load/Unload	474031.84	4742528.33	2001.18	14	8.14	3.16	1.75E-01	2.66E-02
LC_GRTHT	Growth Media Truck Load/Unload	474357.13	4743165.04	1976.00	14	8.14	3.16	5.90E-02	8.93E-03
LC_PIT_T	Pit Truck Loading	473831.52	4743502.99	2026.60	14	8.14	3.16	9.35E-02	1.42E-02

Agrium - Lane Creek Area Source Input

Source ID	Source Description	Easting (m)	Northing (m)	Base Elevation (m)	Height (ft)	Easterly Length (ft)	Northerly Length (ft)	Angle from North	Initial Vert. Dimension (ft)	PM10 (lb/hr)	PM25 (lb/hr)	NO2 (lb/hr)
LC_DRILL	Pit Drilling	473829.99	4743348.88	2041.91	32.81	173.21	173.21	-25.00	3.28	0.774	0.432	0.000
LC_BLAST	Pit Blasting	473744.18	4743543.86	2045.99	65.62	173.21	173.21	-25.00	32.81	6.305	0.364	3.493

Area source parameters assumed same as from preliminary Hildebrand modeling.

Appendix G (Volume Source Calculations)

Agrium Truck Roadway Volume Source Parameter Calculation

Step 1: Width of Plume			
	Road Width (ft) of	100 + 20 ft (6 m) =	120 ft
Step 2: Height of Plume			
	Vehicle height (ft) of	13.6 X 1.7 =	23.12 ft
Step 3: Initial Sigma Y (Horizontal Dimension)			
	Width of plume (ft) of	120 / 2.15 =	55.81 ft
Step 4: Initial Sigma Z (Vertical Dimension)			
	Height of plume (ft) of	23.12 / 2.15 =	10.75 ft
Step 5: Height of Release			
	Height of plume (ft) of	23.12 / 2 =	11.6 ft

Agrium Volume Source Initial Dispersion Characteristic Calculations

Source Description	Height (ft)	Length (ft)	Width (ft)	Release Height (ft)	Release Height Reference	Horizontal Dimension - Sigma Y (ft)	Sigma Y Calculation Reference	Vertical Dimension - Sigma Z (ft)	Sigma Z Calculation Reference
Storage Piles	230	1200	650	115	1/2 Pile Height	205.4	Square root of area divided by 4.3	53.5	Vertical dimension divided by 4.3
Truck Loading/Unloading	14	35	35	13.6	Top of truck	8.14	Square root of area divided by 4.3	3.16	Vertical dimension divided by 4.3

Appendix G (Modeling Results)

4/19/16 Agrium Rasmussen Valley NAAQS Model Results (3MM Tons/yr Production)

Model	File	Pollutant	Average	Group	Rank	Conc/Dep	East (X)	North (Y)	Elev	Hill	Flag	Time	Met File	Sources	Groups	Receptors
AERMOD 15181	Agrium NAAQS_5yrs_NO2.SUM	NO2	8TH-HIGHEST MAX DAILY 1-HR	LANESCK	1ST	498.18949	473975	4743625	1977.52	2282.88	0	5 YEARS	soda_boi-04-08.sfc	47	7	21877
AERMOD 15181	Agrium NAAQS_5yrs_NO2.SUM	NO2	8TH-HIGHEST MAX DAILY 1-HR	P2_NO_LC	1ST	79.37355	471176.9	4743210	1999.28	2357.14	0	5 YEARS	soda_boi-04-08.sfc	47	7	21877
AERMOD 15181	Agrium NAAQS_5yrs_NO2.SUM	NO2	8TH-HIGHEST MAX DAILY 1-HR	P5_NO_LC	1ST	53.72111	472360.4	4742384	1964.22	2376.14	0	5 YEARS	soda_boi-04-08.sfc	47	7	21877
AERMOD 15181	Agrium NAAQS_5yrs_NO2.SUM	NO2	8TH-HIGHEST MAX DAILY 1-HR	P8_NO_LC	1ST	77.91944	473573.5	4741531	1990.71	2123.78	0	5 YEARS	soda_boi-04-08.sfc	47	7	21877
AERMOD 15181	Agrium NAAQS_5yrs_NO2.SUM	NO2	8TH-HIGHEST MAX DAILY 1-HR	PHASE2	1ST	498.19343	473975	4743625	1977.52	2282.88	0	5 YEARS	soda_boi-04-08.sfc	47	7	21877
AERMOD 15181	Agrium NAAQS_5yrs_NO2.SUM	NO2	8TH-HIGHEST MAX DAILY 1-HR	PHASE5	1ST	498.19582	473975	4743625	1977.52	2282.88	0	5 YEARS	soda_boi-04-08.sfc	47	7	21877
AERMOD 15181	Agrium NAAQS_5yrs_NO2.SUM	NO2	8TH-HIGHEST MAX DAILY 1-HR	PHASE8	1ST	498.19629	473975	4743625	1977.52	2282.88	0	5 YEARS	soda_boi-04-08.sfc	47	7	21877
AERMOD 15181	Agrium NAAQS_2005_NOX.SUM	NOX	ANNUAL	LANESCK	1ST	45.55018	473975	4743675	1977.23	2282.88	0	1 YEARS	Soda_BOI-05.SFC	47	7	21877
AERMOD 15181	Agrium NAAQS_2006_NOX.SUM	NOX	ANNUAL	LANESCK	1ST	44.6261	473975	4743675	1977.23	2282.88	0	1 YEARS	Soda_BOI-06.SFC	47	7	21877
AERMOD 15181	Agrium NAAQS_2007_NOX.SUM	NOX	ANNUAL	LANESCK	1ST	43.07099	473975	4743675	1977.23	2282.88	0	1 YEARS	Soda_BOI-07.SFC	47	7	21877
AERMOD 15181	Agrium NAAQS_2004_NOX.SUM	NOX	ANNUAL	LANESCK	1ST	41.16609	473975	4743675	1977.23	2282.88	0	1 YEARS	Soda_BOI-04.SFC	47	7	21877
AERMOD 15181	Agrium NAAQS_2008_NOX.SUM	NOX	ANNUAL	LANESCK	1ST	38.34559	473975	4743675	1977.23	2282.88	0	1 YEARS	Soda_BOI-08.SFC	47	7	21877
AERMOD 15181	Agrium NAAQS_2005_NOX.SUM	NOX	ANNUAL	P2_NO_LC	1ST	8.74362	471132.6	4743232	2002.32	2357.14	0	1 YEARS	Soda_BOI-05.SFC	47	7	21877
AERMOD 15181	Agrium NAAQS_2004_NOX.SUM	NOX	ANNUAL	P2_NO_LC	1ST	8.19904	471132.6	4743232	2002.32	2357.14	0	1 YEARS	Soda_BOI-04.SFC	47	7	21877
AERMOD 15181	Agrium NAAQS_2007_NOX.SUM	NOX	ANNUAL	P2_NO_LC	1ST	8.0142	471132.6	4743232	2002.32	2357.14	0	1 YEARS	Soda_BOI-07.SFC	47	7	21877
AERMOD 15181	Agrium NAAQS_2008_NOX.SUM	NOX	ANNUAL	P2_NO_LC	1ST	7.71415	471132.6	4743232	2002.32	2357.14	0	1 YEARS	Soda_BOI-08.SFC	47	7	21877
AERMOD 15181	Agrium NAAQS_2006_NOX.SUM	NOX	ANNUAL	P2_NO_LC	1ST	7.33262	471110.5	4743244	2000.29	2357.14	0	1 YEARS	Soda_BOI-06.SFC	47	7	21877
AERMOD 15181	Agrium NAAQS_2005_NOX.SUM	NOX	ANNUAL	P5_NO_LC	1ST	6.29323	472215.7	4742673	1988.63	2282.88	0	1 YEARS	Soda_BOI-05.SFC	47	7	21877
AERMOD 15181	Agrium NAAQS_2004_NOX.SUM	NOX	ANNUAL	P5_NO_LC	1ST	5.8132	472215.7	4742673	1988.63	2282.88	0	1 YEARS	Soda_BOI-04.SFC	47	7	21877
AERMOD 15181	Agrium NAAQS_2007_NOX.SUM	NOX	ANNUAL	P5_NO_LC	1ST	5.65339	472215.7	4742673	1988.63	2282.88	0	1 YEARS	Soda_BOI-07.SFC	47	7	21877
AERMOD 15181	Agrium NAAQS_2008_NOX.SUM	NOX	ANNUAL	P5_NO_LC	1ST	5.37749	472215.7	4742673	1988.63	2282.88	0	1 YEARS	Soda_BOI-08.SFC	47	7	21877
AERMOD 15181	Agrium NAAQS_2006_NOX.SUM	NOX	ANNUAL	P5_NO_LC	1ST	5.34842	472215.7	4742673	1988.63	2282.88	0	1 YEARS	Soda_BOI-06.SFC	47	7	21877
AERMOD 15181	Agrium NAAQS_2005_NOX.SUM	NOX	ANNUAL	P8_NO_LC	1ST	7.74638	473473.9	4741531	1990.62	2124.94	0	1 YEARS	Soda_BOI-05.SFC	47	7	21877
AERMOD 15181	Agrium NAAQS_2004_NOX.SUM	NOX	ANNUAL	P8_NO_LC	1ST	7.1229	473498.8	4741531	1990.63	2123.78	0	1 YEARS	Soda_BOI-04.SFC	47	7	21877
AERMOD 15181	Agrium NAAQS_2007_NOX.SUM	NOX	ANNUAL	P8_NO_LC	1ST	7.00788	473498.8	4741531	1990.63	2123.78	0	1 YEARS	Soda_BOI-07.SFC	47	7	21877
AERMOD 15181	Agrium NAAQS_2008_NOX.SUM	NOX	ANNUAL	P8_NO_LC	1ST	6.82324	473498.8	4741531	1990.63	2123.78	0	1 YEARS	Soda_BOI-08.SFC	47	7	21877
AERMOD 15181	Agrium NAAQS_2006_NOX.SUM	NOX	ANNUAL	P8_NO_LC	1ST	6.38542	473473.9	4741531	1990.62	2124.94	0	1 YEARS	Soda_BOI-06.SFC	47	7	21877
AERMOD 15181	Agrium NAAQS_2005_NOX.SUM	NOX	ANNUAL	PHASE2	1ST	45.7965	473975	4743675	1977.23	2282.88	0	1 YEARS	Soda_BOI-05.SFC	47	7	21877
AERMOD 15181	Agrium NAAQS_2006_NOX.SUM	NOX	ANNUAL	PHASE2	1ST	44.86163	473975	4743675	1977.23	2282.88	0	1 YEARS	Soda_BOI-06.SFC	47	7	21877
AERMOD 15181	Agrium NAAQS_2007_NOX.SUM	NOX	ANNUAL	PHASE2	1ST	43.3164	473975	4743675	1977.23	2282.88	0	1 YEARS	Soda_BOI-07.SFC	47	7	21877
AERMOD 15181	Agrium NAAQS_2004_NOX.SUM	NOX	ANNUAL	PHASE2	1ST	41.41172	473975	4743675	1977.23	2282.88	0	1 YEARS	Soda_BOI-04.SFC	47	7	21877
AERMOD 15181	Agrium NAAQS_2008_NOX.SUM	NOX	ANNUAL	PHASE2	1ST	38.60389	473975	4743675	1977.23	2282.88	0	1 YEARS	Soda_BOI-08.SFC	47	7	21877
AERMOD 15181	Agrium NAAQS_2005_NOX.SUM	NOX	ANNUAL	PHASE5	1ST	45.99165	473975	4743675	1977.23	2282.88	0	1 YEARS	Soda_BOI-05.SFC	47	7	21877
AERMOD 15181	Agrium NAAQS_2006_NOX.SUM	NOX	ANNUAL	PHASE5	1ST	45.04587	473975	4743675	1977.23	2282.88	0	1 YEARS	Soda_BOI-06.SFC	47	7	21877
AERMOD 15181	Agrium NAAQS_2007_NOX.SUM	NOX	ANNUAL	PHASE5	1ST	43.51083	473975	4743675	1977.23	2282.88	0	1 YEARS	Soda_BOI-07.SFC	47	7	21877
AERMOD 15181	Agrium NAAQS_2004_NOX.SUM	NOX	ANNUAL	PHASE5	1ST	41.59729	473975	4743675	1977.23	2282.88	0	1 YEARS	Soda_BOI-04.SFC	47	7	21877
AERMOD 15181	Agrium NAAQS_2008_NOX.SUM	NOX	ANNUAL	PHASE5	1ST	38.79835	473975	4743675	1977.23	2282.88	0	1 YEARS	Soda_BOI-08.SFC	47	7	21877
AERMOD 15181	Agrium NAAQS_2005_NOX.SUM	NOX	ANNUAL	PHASE8	1ST	46.11703	473975	4743675	1977.23	2282.88	0	1 YEARS	Soda_BOI-05.SFC	47	7	21877
AERMOD 15181	Agrium NAAQS_2006_NOX.SUM	NOX	ANNUAL	PHASE8	1ST	45.14261	473975	4743675	1977.23	2282.88	0	1 YEARS	Soda_BOI-06.SFC	47	7	21877
AERMOD 15181	Agrium NAAQS_2007_NOX.SUM	NOX	ANNUAL	PHASE8	1ST	43.61678	473975	4743675	1977.23	2282.88	0	1 YEARS	Soda_BOI-07.SFC	47	7	21877
AERMOD 15181	Agrium NAAQS_2004_NOX.SUM	NOX	ANNUAL	PHASE8	1ST	41.71283	473975	4743675	1977.23	2282.88	0	1 YEARS	Soda_BOI-04.SFC	47	7	21877
AERMOD 15181	Agrium NAAQS_2008_NOX.SUM	NOX	ANNUAL	PHASE8	1ST	38.90414	473975	4743675	1977.23	2282.88	0	1 YEARS	Soda_BOI-08.SFC	47	7	21877
AERMOD 15181	Agrium NAAQS_5yrs_PM10.SUM	PM10	24-HR	LANESCK	6TH	157.79558	474075	4743075	1995.83	2282.46	0	5030524	soda_boi-04-08.sfc	448	7	21877
AERMOD 15181	Agrium NAAQS_5yrs_PM10.SUM	PM10	24-HR	P2_NO_LC	6TH	105.76548	471154.8	4743221	2001.9	2357.14	0	5012324	soda_boi-04-08.sfc	448	7	21877
AERMOD 15181	Agrium NAAQS_5yrs_PM10.SUM	PM10	24-HR	P5_NO_LC	6TH	48.92344	471641	4742970	2007.98	2357.14	0	5022724	soda_boi-04-08.sfc	448	7	21877
AERMOD 15181	Agrium NAAQS_5yrs_PM10.SUM	PM10	24-HR	P8_NO_LC	6TH	34.11302	472930.6	4741740	1982.24	2282.88	0	5121524	soda_boi-04-08.sfc	448	7	21877
AERMOD 15181	Agrium NAAQS_5yrs_PM10.SUM	PM10	24-HR	PHASE2	6TH	159.56101	474075	4743075	1995.83	2282.46	0	5030524	soda_boi-04-08.sfc	448	7	21877
AERMOD 15181	Agrium NAAQS_5yrs_PM10.SUM	PM10	24-HR	PHASE5	6TH	160.57205	474075	4743075	1995.83	2282.46	0	5030524	soda_boi-04-08.sfc	448	7	21877
AERMOD 15181	Agrium NAAQS_5yrs_PM10.SUM	PM10	24-HR	PHASE8	6TH	162.00328	474075	4743075	1995.83	2282.46	0	5030524	soda_boi-04-08.sfc	448	7	21877
AERMOD 15181	Agrium NAAQS_5yrs_PM25.SUM	PM25	8TH-HIGHEST 24-HR	LANESCK	1ST	16.09082	473950	4743550	1988.8	2282.88	0	5 YEARS	soda_boi-04-08.sfc	448	7	21877
AERMOD 15181	Agrium NAAQS_5yrs_PM25.SUM	PM25	8TH-HIGHEST 24-HR	P2_NO_LC	1ST	10.29188	471154.8	4743221	2001.9	2357.14	0	5 YEARS	soda_boi-04-08.sfc	448	7	21877
AERMOD 15181	Agrium NAAQS_5yrs_PM25.SUM	PM25	8TH-HIGHEST 24-HR	P5_NO_LC	1ST	4.19163	471641	4742970	2007.98	2357.14	0	5 YEARS	soda_boi-04-08.sfc	448	7	21877
AERMOD 15181	Agrium NAAQS_5yrs_PM25.SUM	PM25	8TH-HIGHEST 24-HR	P8_NO_LC	1ST	3.8418	473498.8	4741531	1990.63	2123.78	0	5 YEARS	soda_boi-04-08.sfc	448	7	21877
AERMOD 15181	Agrium NAAQS_5yrs_PM25.SUM	PM25	8TH-HIGHEST 24-HR	PHASE2	1ST	16.23244	473950	4743550	1988.8	2282.88	0	5 YEARS	soda_boi-04-08.sfc	448	7	21877
AERMOD 15181	Agrium NAAQS_5yrs_PM25.SUM	PM25	8TH-HIGHEST 24-HR	PHASE5	1ST	16.2838	473950	4743550	1988.8	2282.88	0	5 YEARS	soda_boi-04-08.sfc	448	7	21877
AERMOD 15181	Agrium NAAQS_5yrs_PM25.SUM	PM25	8TH-HIGHEST 24-HR	PHASE8	1ST	16.33281	473950	4743550	1988.8	2282.88	0	5 YEARS	soda_boi-04-08.sfc	448	7	21877
AERMOD 15181	Agrium NAAQS_5yrs_PM25.SUM	PM25	ANNUAL	LANESCK	1ST	7.88534	473950	4743550	1988.8	2282.88	0	5 YEARS	soda_boi-04-08.sfc	448	7	21877
AERMOD 15181	Agrium NAAQS_5yrs_PM25.SUM	PM25	ANNUAL	P2_NO_LC	1ST	3.0066	471154.8	4743221	2001.9	2357.14	0	5 YEARS	soda_boi-04-08.sfc	448	7	21877
AERMOD 15181	Agrium NAAQS_5yrs_PM25.SUM	PM25	ANNUAL	P5_NO_LC	1ST	1.30372	472215.7	4742673	1988.63	2282.88	0	5 YEARS	soda_boi-04-08.sfc	448	7	21877
AERMOD 15181	Agrium NAAQS_5yrs_PM25.SUM	PM25	ANNUAL	P8_NO_LC	1ST	1.06505	473498.8	4741531	1990.63	2123.78	0	5 YEARS	soda_boi-04-08.sfc	448	7	21877
AERMOD 15181	Agrium NAAQS_5yrs_PM25.SUM	PM25	ANNUAL	PHASE2	1ST	7.95821	473950	4743550	1988.8	2282.88	0	5 YEARS	soda_boi-04-08.sfc	448	7	21877
AERMOD 15181	Agrium NAAQS_5yrs_PM25.SUM	PM25	ANNUAL	PHASE5	1ST	7.99975	473950	4743550	1988.8	2282.88	0	5 YEARS	soda_boi-04-08.sfc	448	7	21877
AERMOD 15181	Agrium NAAQS_5yrs_PM25.SUM	PM25	ANNUAL	PHASE8	1ST	8.041	473950	4743550	1988.8	2282.88	0	5 YEARS	soda_boi-04-08.sfc	448	7	21877

4/19/16 Agrium Rasmussen Valley NAAQS Model Results (3MM Tons/yr Production)

Pollutant	Average	Group	Rank	Modeled Conc. (ug/m3)	Background (ug/m3)	Total (ug/m3)	Standard (ug/m3)	% Standard	Comment
NO2	8TH-HIGHEST MAX DAILY 1-HR	PHASE2	1ST	398.55	17.2	415.75	188	221%	See Note 4
NO2	8TH-HIGHEST MAX DAILY 1-HR	P2_NO_LC	1ST	63.50	17.2	80.70	188	43%	See Note 5
NO2	8TH-HIGHEST MAX DAILY 1-HR	PHASE5	1ST	398.56	17.2	415.76	188	221%	See Note 4
NO2	8TH-HIGHEST MAX DAILY 1-HR	P5_NO_LC	1ST	42.98	17.2	60.18	188	32%	See Note 5
NO2	8TH-HIGHEST MAX DAILY 1-HR	PHASE8	1ST	398.56	17.2	415.76	188	221%	See Note 4
NO2	8TH-HIGHEST MAX DAILY 1-HR	P8_NO_LC	1ST	62.34	17.2	79.53	188	42%	See Note 5
NOx	ANNUAL	PHASE2	1ST	34.35	1.5	35.86	100	36%	
NOx	ANNUAL	PHASE5	1ST	34.49	1.5	36.01	100	36%	
NOx	ANNUAL	PHASE8	1ST	34.59	1.5	36.10	100	36%	
PM10	24-HR	PHASE2	6TH	159.56	34.0	193.56	150	129%	See Note 4
PM10	24-HR	P2_NO_LC	6TH	105.77	34.0	139.77	150	93%	See Note 5
PM10	24-HR	PHASE5	6TH	160.57	34.0	194.57	150	130%	See Note 4
PM10	24-HR	P5_NO_LC	6TH	48.92	34.0	82.92	150	55%	See Note 5
PM10	24-HR	PHASE8	6TH	162.00	34.0	196.00	150	131%	See Note 4
PM10	24-HR	P8_NO_LC	6TH	34.11	34.0	68.11	150	45%	See Note 5
PM25	ANNUAL	PHASE2	1ST	7.96	1.80	9.76	12	81%	
PM25	ANNUAL	PHASE5	1ST	8.00	1.80	9.80	12	82%	
PM25	ANNUAL	PHASE8	1ST	8.04	1.80	9.84	12	82%	
PM25	8TH-HIGHEST 24-HR	PHASE2	1ST	16.23	6.5	22.73	35	65%	
PM25	8TH-HIGHEST 24-HR	PHASE5	1ST	16.28	6.5	22.78	35	65%	
PM25	8TH-HIGHEST 24-HR	PHASE8	1ST	16.33	6.5	22.83	35	65%	

1. ARM of 0.75 applied to annual NOx modeled impact and ARM of 0.80 applied to 1-hr NOx impact.
2. All background concentrations were provided by the DEQ.
3. Agrium's Lanes Creek mine included.
4. Exceedences due to emissions from Lanes Creek. All exceedences occur within Lanes Creek ambient boundary which would not be considered ambient air for Lanes operations.
5. Lanes Creek emissions not included. There are no modeled exceedences when Lanes Creek sources are excluded.

4/19/16 Agrium Rasmussen Valley TAP Model Results (3MM Tons/yr Production)

Model	File	Pollutant	Average	Group	Rank	Conc/Dep	East (X)	North (Y)	Elev	Hill	Flag	Time	Met File	Sources	Groups	Receptors
AERMOD 15181	Agrium TAP_2005_AS.SUM	AS	ANNUAL	PHASE2	1ST	0.00014	471154.8	4743221	2001.9	2357.14	0	1 YEARS	Soda_BOI-05.SFC	305	3	21877
AERMOD 15181	Agrium TAP_2004_AS.SUM	AS	ANNUAL	PHASE2	1ST	0.00013	471154.8	4743221	2001.9	2357.14	0	1 YEARS	Soda_BOI-04.SFC	305	3	21877
AERMOD 15181	Agrium TAP_2007_AS.SUM	AS	ANNUAL	PHASE2	1ST	0.00013	471154.8	4743221	2001.9	2357.14	0	1 YEARS	Soda_BOI-07.SFC	305	3	21877
AERMOD 15181	Agrium TAP_2006_AS.SUM	AS	ANNUAL	PHASE2	1ST	0.00012	471154.8	4743221	2001.9	2357.14	0	1 YEARS	Soda_BOI-06.SFC	305	3	21877
AERMOD 15181	Agrium TAP_2008_AS.SUM	AS	ANNUAL	PHASE2	1ST	0.00012	471154.8	4743221	2001.9	2357.14	0	1 YEARS	Soda_BOI-08.SFC	305	3	21877
AERMOD 15181	Agrium TAP_2004_AS.SUM	AS	ANNUAL	PHASE5	1ST	0.00006	471641	4742970	2007.98	2357.14	0	1 YEARS	Soda_BOI-04.SFC	305	3	21877
AERMOD 15181	Agrium TAP_2005_AS.SUM	AS	ANNUAL	PHASE5	1ST	0.00006	471641	4742970	2007.98	2357.14	0	1 YEARS	Soda_BOI-05.SFC	305	3	21877
AERMOD 15181	Agrium TAP_2007_AS.SUM	AS	ANNUAL	PHASE5	1ST	0.00006	471641	4742970	2007.98	2357.14	0	1 YEARS	Soda_BOI-07.SFC	305	3	21877
AERMOD 15181	Agrium TAP_2008_AS.SUM	AS	ANNUAL	PHASE5	1ST	0.00006	471641	4742970	2007.98	2357.14	0	1 YEARS	Soda_BOI-08.SFC	305	3	21877
AERMOD 15181	Agrium TAP_2006_AS.SUM	AS	ANNUAL	PHASE5	1ST	0.00005	471641	4742970	2007.98	2357.14	0	1 YEARS	Soda_BOI-06.SFC	305	3	21877
AERMOD 15181	Agrium TAP_2004_AS.SUM	AS	ANNUAL	PHASE8	1ST	0.00004	470404.9	4743907	2056.09	2357.14	0	1 YEARS	Soda_BOI-04.SFC	305	3	21877
AERMOD 15181	Agrium TAP_2005_AS.SUM	AS	ANNUAL	PHASE8	1ST	0.00004	472953	4741731	1982.05	2282.46	0	1 YEARS	Soda_BOI-05.SFC	305	3	21877
AERMOD 15181	Agrium TAP_2007_AS.SUM	AS	ANNUAL	PHASE8	1ST	0.00004	470404.9	4743907	2056.09	2357.14	0	1 YEARS	Soda_BOI-07.SFC	305	3	21877
AERMOD 15181	Agrium TAP_2008_AS.SUM	AS	ANNUAL	PHASE8	1ST	0.00004	470404.9	4743907	2056.09	2357.14	0	1 YEARS	Soda_BOI-08.SFC	305	3	21877
AERMOD 15181	Agrium TAP_2006_AS.SUM	AS	ANNUAL	PHASE8	1ST	0.00003	470404.9	4743907	2056.09	2357.14	0	1 YEARS	Soda_BOI-06.SFC	305	3	21877
AERMOD 15181	Agrium TAP_2005_CD.SUM	CD	ANNUAL	PHASE2	1ST	0.00031	471154.8	4743221	2001.9	2357.14	0	1 YEARS	Soda_BOI-05.SFC	305	3	21877
AERMOD 15181	Agrium TAP_2004_CD.SUM	CD	ANNUAL	PHASE2	1ST	0.00029	471154.8	4743221	2001.9	2357.14	0	1 YEARS	Soda_BOI-04.SFC	305	3	21877
AERMOD 15181	Agrium TAP_2007_CD.SUM	CD	ANNUAL	PHASE2	1ST	0.00028	471154.8	4743221	2001.9	2357.14	0	1 YEARS	Soda_BOI-07.SFC	305	3	21877
AERMOD 15181	Agrium TAP_2008_CD.SUM	CD	ANNUAL	PHASE2	1ST	0.00027	471154.8	4743221	2001.9	2357.14	0	1 YEARS	Soda_BOI-08.SFC	305	3	21877
AERMOD 15181	Agrium TAP_2006_CD.SUM	CD	ANNUAL	PHASE2	1ST	0.00026	471154.8	4743221	2001.9	2357.14	0	1 YEARS	Soda_BOI-06.SFC	305	3	21877
AERMOD 15181	Agrium TAP_2005_CD.SUM	CD	ANNUAL	PHASE5	1ST	0.00014	471641	4742970	2007.98	2357.14	0	1 YEARS	Soda_BOI-05.SFC	305	3	21877
AERMOD 15181	Agrium TAP_2004_CD.SUM	CD	ANNUAL	PHASE5	1ST	0.00013	471641	4742970	2007.98	2357.14	0	1 YEARS	Soda_BOI-04.SFC	305	3	21877
AERMOD 15181	Agrium TAP_2007_CD.SUM	CD	ANNUAL	PHASE5	1ST	0.00013	471641	4742970	2007.98	2357.14	0	1 YEARS	Soda_BOI-07.SFC	305	3	21877
AERMOD 15181	Agrium TAP_2006_CD.SUM	CD	ANNUAL	PHASE5	1ST	0.00012	471641	4742970	2007.98	2357.14	0	1 YEARS	Soda_BOI-06.SFC	305	3	21877
AERMOD 15181	Agrium TAP_2008_CD.SUM	CD	ANNUAL	PHASE5	1ST	0.00012	471641	4742970	2007.98	2357.14	0	1 YEARS	Soda_BOI-08.SFC	305	3	21877
AERMOD 15181	Agrium TAP_2005_CD.SUM	CD	ANNUAL	PHASE8	1ST	0.00009	472953	4741731	1982.05	2282.46	0	1 YEARS	Soda_BOI-05.SFC	305	3	21877
AERMOD 15181	Agrium TAP_2004_CD.SUM	CD	ANNUAL	PHASE8	1ST	0.00008	472953	4741731	1982.05	2282.46	0	1 YEARS	Soda_BOI-04.SFC	305	3	21877
AERMOD 15181	Agrium TAP_2007_CD.SUM	CD	ANNUAL	PHASE8	1ST	0.00008	472953	4741731	1982.05	2282.46	0	1 YEARS	Soda_BOI-07.SFC	305	3	21877
AERMOD 15181	Agrium TAP_2008_CD.SUM	CD	ANNUAL	PHASE8	1ST	0.00008	472975.5	4741721	1982.21	2282.46	0	1 YEARS	Soda_BOI-08.SFC	305	3	21877
AERMOD 15181	Agrium TAP_2006_CD.SUM	CD	ANNUAL	PHASE8	1ST	0.00007	472953	4741731	1982.05	2282.46	0	1 YEARS	Soda_BOI-06.SFC	305	3	21877
AERMOD 15181	Agrium TAP_2004_FE.SUM	FE	24-HR	PHASE2	1ST	1.23736	471154.8	4743221	2001.9	2357.14	0	4011724	Soda_BOI-04.SFC	305	3	21877
AERMOD 15181	Agrium TAP_2005_FE.SUM	FE	24-HR	PHASE2	1ST	1.00254	471154.8	4743221	2001.9	2357.14	0	5121424	Soda_BOI-05.SFC	305	3	21877
AERMOD 15181	Agrium TAP_2006_FE.SUM	FE	24-HR	PHASE2	1ST	0.94592	471132.6	4743232	2002.32	2357.14	0	6120324	Soda_BOI-06.SFC	305	3	21877
AERMOD 15181	Agrium TAP_2007_FE.SUM	FE	24-HR	PHASE2	1ST	0.9075	471154.8	4743221	2001.9	2357.14	0	7012424	Soda_BOI-07.SFC	305	3	21877
AERMOD 15181	Agrium TAP_2008_FE.SUM	FE	24-HR	PHASE2	1ST	0.84856	471154.8	4743221	2001.9	2357.14	0	8012324	Soda_BOI-08.SFC	305	3	21877
AERMOD 15181	Agrium TAP_2004_FE.SUM	FE	24-HR	PHASE5	1ST	0.55156	471641	4742970	2007.98	2357.14	0	4011724	Soda_BOI-04.SFC	305	3	21877
AERMOD 15181	Agrium TAP_2006_FE.SUM	FE	24-HR	PHASE5	1ST	0.48719	471618.9	4742981	2008.44	2357.14	0	6120324	Soda_BOI-06.SFC	305	3	21877
AERMOD 15181	Agrium TAP_2005_FE.SUM	FE	24-HR	PHASE5	1ST	0.4516	471641	4742970	2007.98	2357.14	0	5012324	Soda_BOI-05.SFC	305	3	21877
AERMOD 15181	Agrium TAP_2007_FE.SUM	FE	24-HR	PHASE5	1ST	0.3894	471625	4742975	2007.66	2357.14	0	7012424	Soda_BOI-07.SFC	305	3	21877
AERMOD 15181	Agrium TAP_2008_FE.SUM	FE	24-HR	PHASE5	1ST	0.37642	471641	4742970	2007.98	2357.14	0	8012324	Soda_BOI-08.SFC	305	3	21877
AERMOD 15181	Agrium TAP_2004_FE.SUM	FE	24-HR	PHASE8	1ST	0.39967	472953	4741731	1982.05	2282.46	0	4011724	Soda_BOI-04.SFC	305	3	21877
AERMOD 15181	Agrium TAP_2006_FE.SUM	FE	24-HR	PHASE8	1ST	0.33654	472908.2	4741750	1982.68	2282.88	0	6120324	Soda_BOI-06.SFC	305	3	21877
AERMOD 15181	Agrium TAP_2005_FE.SUM	FE	24-HR	PHASE8	1ST	0.32394	472930.6	4741740	1982.24	2282.88	0	5022724	Soda_BOI-05.SFC	305	3	21877
AERMOD 15181	Agrium TAP_2007_FE.SUM	FE	24-HR	PHASE8	1ST	0.28482	472930.6	4741740	1982.24	2282.88	0	7012424	Soda_BOI-07.SFC	305	3	21877
AERMOD 15181	Agrium TAP_2008_FE.SUM	FE	24-HR	PHASE8	1ST	0.26074	472975.5	4741721	1982.21	2282.46	0	8021824	Soda_BOI-08.SFC	305	3	21877
AERMOD 15181	Agrium TAP_2005_NI.SUM	NI	ANNUAL	PHASE2	1ST	0.00134	471154.8	4743221	2001.9	2357.14	0	1 YEARS	Soda_BOI-05.SFC	305	3	21877
AERMOD 15181	Agrium TAP_2004_NI.SUM	NI	ANNUAL	PHASE2	1ST	0.00125	471154.8	4743221	2001.9	2357.14	0	1 YEARS	Soda_BOI-04.SFC	305	3	21877
AERMOD 15181	Agrium TAP_2007_NI.SUM	NI	ANNUAL	PHASE2	1ST	0.00122	471154.8	4743221	2001.9	2357.14	0	1 YEARS	Soda_BOI-07.SFC	305	3	21877
AERMOD 15181	Agrium TAP_2008_NI.SUM	NI	ANNUAL	PHASE2	1ST	0.00118	471154.8	4743221	2001.9	2357.14	0	1 YEARS	Soda_BOI-08.SFC	305	3	21877
AERMOD 15181	Agrium TAP_2006_NI.SUM	NI	ANNUAL	PHASE2	1ST	0.00112	471154.8	4743221	2001.9	2357.14	0	1 YEARS	Soda_BOI-06.SFC	305	3	21877
AERMOD 15181	Agrium TAP_2005_NI.SUM	NI	ANNUAL	PHASE5	1ST	0.0006	471641	4742970	2007.98	2357.14	0	1 YEARS	Soda_BOI-05.SFC	305	3	21877
AERMOD 15181	Agrium TAP_2004_NI.SUM	NI	ANNUAL	PHASE5	1ST	0.00057	471641	4742970	2007.98	2357.14	0	1 YEARS	Soda_BOI-04.SFC	305	3	21877
AERMOD 15181	Agrium TAP_2007_NI.SUM	NI	ANNUAL	PHASE5	1ST	0.00056	471641	4742970	2007.98	2357.14	0	1 YEARS	Soda_BOI-07.SFC	305	3	21877
AERMOD 15181	Agrium TAP_2008_NI.SUM	NI	ANNUAL	PHASE5	1ST	0.00053	471641	4742970	2007.98	2357.14	0	1 YEARS	Soda_BOI-08.SFC	305	3	21877
AERMOD 15181	Agrium TAP_2006_NI.SUM	NI	ANNUAL	PHASE5	1ST	0.00051	471641	4742970	2007.98	2357.14	0	1 YEARS	Soda_BOI-06.SFC	305	3	21877
AERMOD 15181	Agrium TAP_2005_NI.SUM	NI	ANNUAL	PHASE8	1ST	0.00038	472953	4741731	1982.05	2282.46	0	1 YEARS	Soda_BOI-05.SFC	305	3	21877
AERMOD 15181	Agrium TAP_2004_NI.SUM	NI	ANNUAL	PHASE8	1ST	0.00036	470404.9	4743907	2056.09	2357.14	0	1 YEARS	Soda_BOI-04.SFC	305	3	21877
AERMOD 15181	Agrium TAP_2007_NI.SUM	NI	ANNUAL	PHASE8	1ST	0.00036	470404.9	4743907	2056.09	2357.14	0	1 YEARS	Soda_BOI-07.SFC	305	3	21877
AERMOD 15181	Agrium TAP_2008_NI.SUM	NI	ANNUAL	PHASE8	1ST	0.00035	470404.9	4743907	2056.09	2357.14	0	1 YEARS	Soda_BOI-08.SFC	305	3	21877
AERMOD 15181	Agrium TAP_2006_NI.SUM	NI	ANNUAL	PHASE8	1ST	0.00033	470404.9	4743907	2056.09	2357.14	0	1 YEARS	Soda_BOI-06.SFC	305	3	21877

4/19/16 Agrium Rasmussen Valley TAP Model Results (3MM Tons/yr Production)

Pollutant	Average	Group	Rank	Modeled Conc. (ug/m3)	AACC/AAC (ug/m3)	% Standard
AS	ANNUAL	PHASE2	1ST	**1.40E-04**	2.3.E-04	61%
AS	ANNUAL	PHASE5	1ST	6.00E-05	2.3.E-04	26%
AS	ANNUAL	PHASE8	1ST	4.00E-05	2.3.E-04	17%
FE	24-HR	PHASE2	1ST	**1.24E+00**	5.0.E+01	2%
FE	24-HR	PHASE5	1ST	5.52E-01	5.0.E+01	1%
FE	24-HR	PHASE8	1ST	4.00E-01	5.0.E+01	1%
CD	ANNUAL	PHASE2	1ST	**3.10E-04**	5.6.E-04	55%
CD	ANNUAL	PHASE5	1ST	1.40E-04	5.6.E-04	25%
CD	ANNUAL	PHASE8	1ST	9.00E-05	5.6.E-04	16%
NI	ANNUAL	PHASE2	1ST	**1.34E-03**	4.2.E-03	32%
NI	ANNUAL	PHASE5	1ST	6.00E-04	4.2.E-03	14%
NI	ANNUAL	PHASE8	1ST	3.80E-04	4.2.E-03	9%

Appendix G (Model Protocol Approval)

STATE OF IDAHO
DEPARTMENT OF
ENVIRONMENTAL QUALITY

1410 NORTH HILTON, BOISE, ID 83706 · (208) 373-0502

C. L. "BUTCH" OTTER, GOVERNOR

JOHN TIPPETS, DIRECTOR

January 12, 2016

David Keane
RTP Environmental Associates on behalf of Agrium, Rassmussen Valley Mine, Caribou County, Idaho

Re: Modeling Protocol for the Rasmussen Valley Mine in Caribou County, Idaho

Dear David:

DEQ received your dispersion modeling protocol via email on December 18, 2015 on behalf of Agrium, Rasmussen Valley Mine project in Caribou County, Idaho. The modeling protocol was submitted by David Keane of RTP Environmental Associates, Inc (RTP). The modeling protocol proposes methods and data for use in the ambient impact analyses of a Permit to Construct (PTC) application for a new facility. The analyses are needed to demonstrate compliance with ambient air quality standards for the proposed facility. DEQ has the following comments:

- Comment 1: Documentation and justification of release parameters must be provided in the application. Refer to Section 3.4.3 of the *State of Idaho Guideline for Performing Air Quality Impact Analyses*, September 2013(http://www.deq.idaho.gov/media/1029/modeling-guideline.pdf). Simply stating that values are "manufacturer data" does not constitute adequate documentation and/or justification. DEQ requests that the application describe how the values were obtained (measurement, similar source, combustion evaluation, fan curves, etc.). If values were obtained from an equipment/engineering firm, then those forms, specification sheets, etc. provided by the firm should be included in the application as documentation for the values used in the modeling analyses. The application should be treated as a stand-alone document. If values have been taken from previous permit applications or permits, then the data and derivation from those permit applications or permits must be included in the document. If data was taken from a stack test, then the stack test report and data should also be included in the document.

- Comment 2: RTP states that operation of the emergency generator will be limited to 100 hours a year, and therefore will not be modeled for the NO_2 1-hour NAAQS analysis, per DEQ modeling guidelines. DEQ reminds RTP that the emissions for the emergency generator still need to be accounted for in the modeling analyses for other pollutants and for annual NO_2 analysis. Unless a permit provision limiting the source to total operations of less than 100 hours/year is requested by the applicant, annual modeling of emergency generators should assume 500 hours/year (a value EPA determined represents PTE, considering both testing, maintenance, and potential use during emergencies). Short term rates based on maximum hourly emissions should be adequate to demonstrate compliance with short term NAAQS, such as that for $PM_{2.5}$.

- Comment 3: Descriptions of the facility process are generally adequate. The ambient air boundary, as stated in the State of Idaho Guideline for Performing Air Quality Impact Analyses, should be defined by an area where the public access is legally and practically precluded. This includes separation from areas of habitation or activities by people not employed by the facility. The protocol states that the ambient boundary will not be controlled by a physical barrier but general access will be discouraged by posting, and facility employees will maintain awareness of possible trespasses. The applicant should strive to provide a very detailed description of the facility and boundary in the modeling report provided in the final submittal as described in section 1c of Section 6.5 in the Modeling Guideline [1] If a physical barrier is not used to preclude public access from areas excluded from ambient air, then the application must thoroughly describe the methods used to practically preclude access.

- Comment 4: RTP has proposed to use the meteorological data provided by DEQ. This data was collected at the nearby Soda Springs Idaho airport for the period 2008-2012~~,~~ and is deemed to be appropriately representative of the facility locale.

- Comment 5: RTP has chosen to model the mine haul roads as adjacent volume sources in accordance with the procedures adopted by the EPA Haul Road Workgroup, as described in "Haul Road Workgroup Final Report", EPA Region 5, March 2012. DEQ accepts that document as adequate guidance. DEQ will review RTP's adaptation of those procedures when the modeling analyses report is submitted with the permit application.

- Comment 6: DEQ is providing updated ambient background concentrations to be used in the modeling analyses. These data will be taken from the NWAIRQUEST tool using the coordinates of the facility.

- Comment 7: RTP did not provide detailed emission data with the modeling protocol. It should be noted that review and acceptance of the emission calculation and their usage with respect to modeling thresholds is the responsibility of the assigned permit writer, and DEQ review of such emissions estimates will be performed during DEQ's review of the submitted application. Usage of emissions with respect to modeling thresholds is normally limited to Level I thresholds. Level II modeling applicability thresholds are accepted on a case by case

situation, and discussions with DEQ and approval by DEQ are necessary before any pollutants can be excluded from site-specific analyses on the basis of emissions quantities below Level II thresholds. Therefore modeling applicability and estimated modeling emissions are considered preliminary as submitted in the protocol.

- Comment 8: RTP requests that no other sources be modeled in the application, and that the impact from all other nearby sources should be assumed to be included with the ambient background concentrations derived from NWAIRQUEST. DEQ will not agree to this request without further assessment of the existing sources in the immediate area of the proposed mine site. The background values from NWAIRQUEST are relatively small in magnitude, and would not account for another nearby source with significant emissions, (such as the Lanes Creek mine). The submitted application must provide justification for exclusion of any nearby facilities. If RTP requests that this issue be confidently resolved prior to submission of the application, then a protocol addendum could be submitted for DEQ's consideration prior to performing the analyses.

- Comment 9: RTP discusses various options available about assessing NO_2 impacts with respect to chemical transformation from NOx to NO_2. If non-default Tier 3 options such as OLM or PVMRM are used, the applicant must first contact DEQ for prior approval. The Tier 1 and Tier 2 options as discussed are adequate, as are the suggested equilibrium ratio of 0.9. The in-stack ratio (ISR) database items used for selection of the ISR for the diesel fired generators must be provided with the modeling report.

- Comment 10: RTP provides adequate description of a modeling receptor grid. DEQ agrees with placement of receptors on Lanes Creek Road. DEQ reminds the applicant that the density spacing of receptors in the immediate areas of maximum "design" concentrations should be such that DEQ is confident that maximum impacts have been identified at a level where compliance with the applicable standards is highly confident.

- Comment 11: DEQ has recently developed a modeling report template form for consultants/applicants to use when submitting modeling analyses. An electronic copy of this template should have been attached to the email delivering this protocol approval notice. DEQ now **requires** that this template be used for the submitted modeling analyses.

DEQ modeling staff considers the submitted dispersion modeling protocol, with consideration and resolution of the additional items noted above, to be approved. It should be noted, however, that the approval of this modeling protocol is not meant to imply approval of a completed dispersion modeling analysis. Please refer to the *State of Idaho Air Quality Modeling Guideline*, which is available on the Internet at http://www.deq.state.id.us/air/permits_forms/permitting/modeling_guideline.pdf, for further guidance.

DEQ modeling staff requests submission of electronic copies of all modeling input and output files (including BPIP and AERMAP input and output files) with an analysis report. Also, please include with

the application materials a copy of the protocol and this protocol approval in the appendix of the application. If you have any questions, please call at 208 373 0220

Sincerely,

Thomas Swain
Analyst 3 , Air Modeling
Idaho Department of Environmental Quality
208 373-0220
thomas.swain@deq.idaho.gov

([1])*State of Idaho Guideline for Performing Air Quality Impact Analyses*, September 2013