Attachment 13
Container Management Units
Table of Contents

D.0 Process Information **3**

D.1 Container Management Units **3**

D.1.a Descriptions of Containers 3

D.1.b Container Management Practices 4
D.1.b.(1) Container Waste Acceptance 5
D.1.b.(1)(a) Container Inspection 5
D.1.b.(1)(b) Container Staging 5
D.1.b.(2) Containers 6
D.1.b.(2)(a) Damaged Containers 6
D.1.b.(2)(b) Container Level 1 Control Requirements 6
D.1.b.(2)(c) Movement 7
D.1.b.(3) Container Decanting 7
D.1.b.(4) Stabilization in Containers 7
D.1.b.(5) Container Crushing 8

D.1.c Container Management Requirements - General 8
D.1.c.(1) General Storage Requirements 8
D.1.c.(2) Security, Safety and Emergency Equipment 9
D.1.c.(3) Aisle Space 9
D.1.c.(4) Incompatible, Ignitable and Reactive Wastes in Storage 10

D.1.d Container Management Practices - Handling Containers with Free Liquids 10
D.1.d.(1) Secondary Containment System Design and Operation 10
D.1.d.(2) Requirement for the Base or Liner to Contain Liquids 11
D.1.d.(3) Containment System Drainage 11
D.1.d.(4) Containment System Capacity 11
D.1.d.(5) Control of Run-On 12
D.1.d.(6) Removal of Liquids from Containment System 12
D.1.d.(7) Storage Unit Decontamination 12

D.1.e Container Management Practices - Handling Containers without Free Liquids 13
D.1.e.(1) Test for Free Liquids 13
D.1.e.(2) Container Management Unit Drainage 13

List of Tables

Table D-1 **Maximum Container and Containment Building Storage Volumes**

Table D-1a **Allowable Capacities**

D.0 Process Information

This Section provides specific process information for the following hazardous waste management activities at the facility:

- Container Management Units (CMUs) (Section D.1)
- Tank Systems (Section D.2)
- Surface Impoundments (Section D.4)
- Landfills (Section D.6)
- Miscellaneous Units (Section D.8)
- Containment Buildings (Section D.9)
- Treatment (Section D.10)

The information in this Section relates to both existing and proposed (future/to be constructed) hazardous waste management units and treatment processes. A summary of the applicable RCRA codes and design and process capacities for the facility and the respective hazardous waste management units are included in the Part A Form in Section A.

D.1 Container Management Units

References are made throughout this plan to regulations promulgated by the EPA regarding waste analysis requirements for hazardous waste management facilities. These requirements are generally found in 40 CFR Part 264, Subpart B, which has been adopted by reference in the rules of the Idaho Department of Environmental Quality (IDEQ). Unless otherwise specified herein, cited federal regulations have been adopted by reference by the IDEQ.

This Section provides descriptions of the types of container management practices used on-site for all permitted RCRA Container Management Units (CMUs):

- Container Storage Pad 4 (CSP #4)
- Container Storage Pad 5 (CSP #5)
- RCRA(Pad 7)/PCB Building
- Stabilization Facility
- Containment Building
- Truck Unloading Apron #1 and #2 (at the Containment Building)
- Truck Unloading Apron #3 (at the Containment Building)
- Container Storage Area 1 (CSA #1)

Containers managed inside the Containment Building are subject to the regulations and management practices of 40 CFR Part 264, Subpart DD. See Section D.9 for additional Containment Building storage information.

The locations of these units are shown on the Facility Site Plan, Figure D-1.

D.1.a Descriptions of Containers

Containers are used on-site to manage wastes with and without free liquids. These containers vary in size from small vials and pails to 52 yd^3 roll-off containers. Containers up to three (3) yd^3 capacity (including 55, 85 & 110 gallon drums, supersacks, and strong, tight containers, etc.) are generally considered non-bulk containers although any size container may be managed as a non-bulk container if it can be accommodated in an area permitted for container management. Containers used for stabilization at the

Stabilization Facility are specially-designed roll-off containers (sometimes referred to as “Mix Bins”) built to handle the severe service dictated by the stabilization process. Because of the physical impacts imparted by mixing, these roll-offs are sealed containers and are typically constructed with a minimum plate steel thickness of 3/16”. With approximate exterior dimensions of 28 ft. long by 10 ft. wide by six (6) ft. deep, these Mixing Bins are approximately 52 yd^3 in size.

The empty Mix Bins are maneuvered within the Stabilization Facility on rail tracks, and, if required (40 CFR §261.7), are closed (covered/tarped) at the end of each operating day and/or prior to storage in the various CMUs. The Mix Bins are not used for off-site transportation because of their size and weight. Specialized equipment is used for the loading, unloading, and movement of the bins.

D.1.b Container Management Practices

Containers are initially packaged off-site by the generator of the waste and shipped to the facility, but waste may be re-packaged on-site, if necessary or required. Containers are accepted for management based on the following criteria:

- The hazardous waste must be compatible with the container.
- The waste contents must be authorized in accordance with the facility’s permit.
- Each container must display a label identifying its contents (excluding Mixing Bins in process, unless in storage).
- All hazardous waste containers shipped to the facility must have an accompanying manifest.
- A piece count must be completed and compared to the manifest listing. Significant manifest discrepancies as defined in IDAPA 58.01.05.008 (40 CFR Parts 264.72 (b)) must be reconciled with the generator and/or transporter, or the IDEQ is notified when significant discrepancies occur in accordance with Section C.7.2 and 11.8 of the facility Waste Analysis Plan (WAP).

Each container placed into storage is labeled with the appropriate chemical compatibility category (A-H). Each segregated storage area within each CMU is marked to designate the chemical compatibility category of the wastes being stored in it. The marking is changed as the compatibility category of the waste changes. The containers are placed so the chemical compatibility category marking on each container is visible for inspection. Waste containers that will be brokered to an alternate treatment facility (once known) will be designated as such by placing a unique marking such as “red” label/mark on the container.

Listed dioxin wastes (F020, F021, F022, F023, F026 and F027) may only be stored in CMUs with appropriate secondary containment. These units are CSP #4, CSP #5, RCRA (Pad 7)/PCB Building, the Stabilization Facility, the Containment Building, and Truck Unloading Aprons #1, #2, & #3. This restriction applies to both liquid and solid forms of these wastes. See Table D-1 and D-1A for maximum capacity and size of the largest container. In addition, the wastes must be managed in accordance with all other requirements of the Dioxin Waste Management Plan, (see Appendix D.4.9).

Hazardous waste management activities in CMUs may consist of various operations. The operations and their order may vary for containers received and managed at the facility. Hazardous waste management activities in CMUs include:

- Container Waste Acceptance;
- Storage;
- Decanting;
- Stabilization;
- Container Crushing;
- Container Reuse;
- Handling/Movement;

- Inspection;
- Maintenance; and
- Staging

The following Sections describe each of these operations and their limits/controls.

D.1.b.(1) Container Waste Acceptance

Waste acceptance is comprised of the following five step process:

1. Waste arrives at the facility.
2. Waste is staged at either a CMU or a Truck Staging Area.
3. The waste is processed in accordance with the waste acceptance procedures described in the WAP.
4. The waste is rejected (or put on hold pending resolution) and held in designated staging areas, until the discrepancy is resolved; or
5. The waste is received into a CMU or other RCRA unit for treatment, storage, or disposal.

Unloading and staging of containers may occur at the Truck Staging Area or any of the CMUs, with the exception of CSA #1 (if the waste contains free liquids or dioxins). Staging is described in detail later in this section. Many functions may be performed during the unloading and staging process including inspection, opening and closing, unloading, and sampling of containers.

D.1.b.(1)(a) Container Inspection

Containers that can be observed while still on trucks may be inspected for integrity prior to acceptance and prior to unloading to expedite the unloading and implementation of corrective measures (e.g.; re-packaging).

Containers are normally unloaded directly into the CMU where they are opened and inspected. Waste samples, if appropriate, are obtained in accordance with the guidance provided in Section C.4 and C.5 of the facility WAP. Containers being unloaded are not placed into any standing liquid. If the containers contain free liquids then they are unloaded directly onto a CMU where appropriate secondary containment is provided (i.e., excludes CSA #1).

For purposes of container inspection and sampling, all containers to be inspected from a load may be opened at the same time to allow direct visual comparison of the materials in the different containers. Upon completion of inspection and sampling, containers are managed as described in Section D.1.c.(1). Containers in any CMU requiring Level 1 controls in accordance with 40 CFR Part 264, Subpart CC are identified as such on the Internal Control Form (ICF) and are managed in accordance with the requirements found in Section D.1.b.(2)(b).

D.1.b.(1)(b) Container Staging

Bulk wastes are staged while undergoing load acceptance processing in accordance with the WAP or for treatment (i.e., stabilization), disposal, or shipment off-site. Bulk or non-bulk wastes may be staged in any of the permitted CMUs or Containment Building in accordance with the capacities listed in Table D-1 and D-1A.

The procedures for staging wastes are dependent on the unloading and process scheduling. Because many different waste types arrive at the facility on any given day, it is not possible to specify the exact type of waste that will be staged on a given day in a given staging area. Unless it has been established in accordance with the procedures described in the WAP that non-bulk or bulk containers being unloaded

are compatible with the wastes already staged or stored in the unit, the new containers will be staged either with a minimum separation of five (5) ft. from other waste(s) in the CMU, in a separate sub-area or in an area for which the wastes are compatible. Procedures for determining compatibility are described in the WAP.

Containers may be opened for sampling and inspection during staging and, upon completion, the containers are closed unless they are in the Containment Building (e.g., emptied into a stabilization Mixing Bin Tank, sort floor, crushing system, or roll-off container). Section D.1.b.(2)(b) describes the facilities Level 1 Controls for the management of wastes in containers subject to IDAPA 58.01.05.008 and 40 CFR Part 264, Subpart CC rules.

Bulk containers (e.g., end dumps, dump trucks and pups, roll-offs, etc.) may be initially staged in the Truck Staging Area or the Truck Unloading Aprons of the Containment Building (Stabilization or Debris Portion). The Truck Staging Area is shown on the Facility Site Plan, Figure D-1 and is a compacted soil area for inspection and sampling of over-the-road bulk trucks. The only activities occurring in the Truck Staging Area are waste staging, inspection, sampling, and processing (in accordance with the WAP), and the tarping and un-tarping of truck shipments. This area is not used to store any hazardous waste containers or vehicles accepted for storage other than temporary staging prior to on-site management and/or waste acceptance determination.

Containers of liquid wastes meeting the LDR requirements of 40 CFR 268 are also staged at the concrete containment area at the Evaporation Pond while liquids are being transferred to the Evaporation Pond.

D.1.b.(2) Containers

D.1.b.(2)(a) Damaged Containers

All spills and leaks are expeditiously controlled and collected. If a container's integrity is compromised, the waste container, residue, and any spill cleanup materials generated are transferred to an intact container or over-pack, or the waste and the damaged container are expeditiously processed. Any required specific spill response actions are addressed in the Contingency Plan (Section G).

D.1.b.(2)(b) Container Level 1 Control Requirements

In accordance with the provisions of IDAPA 58.01.05.008 and 40 CFR Part 264, Subpart CC, Container Level 1 management standards for volatile organic wastes that exceed 500 ppm at the point of waste origination are used. The applicability of this standard is determined during the pre-acceptance evaluation as described in the WAP. The Container Level 1 requirement is determined on a waste stream by waste stream basis, and its applicability is noted on the container's ICF.

The Container Level 1 standards are as follows:

- The container must meet applicable DOT regulations.
- The container must be equipped with a cover and closure device that form a barrier over the container openings such that there are no visible holes, gaps, or other open spaces (e.g., a lid on a drum or a suitably secured tarp on a roll-off container). An open top container may be used if a vapor suppressant is applied over the hazardous waste such that it is not exposed to the atmosphere.
- The covers/closure devices used must be composed of materials that minimize the volatilization of the hazardous waste to the atmosphere. Factors to be considered in determining a suitable material for a cover/closure device include the effects of hazardous waste contact on the closure device, the effects of outdoor exposure, and other appropriate operating factors. This

determination is made during the pre-acceptance evaluation (waste/container compatibility) as described in the WAP.

- The container must be inspected within 24 hours of waste acceptance to document that there are no holes, cracks, or gaps in the cover/closure.
- All repairs to a container with a defect in the cover/closure must be initiated within 24 hours of defect detection. If repairs cannot be completed within five (5) calendar days of defect detection, then the hazardous waste must be removed from the container and placed into an acceptable container or managed with another authorized method.
- Level 1 controlled containers must be kept closed except:
    - While adding or removing waste or within 15 minutes after which no additional material has been added or removed from the container;
    - When sampling the waste or accessing other equipment inside the container;
    - When a pressure relief device is used for maintaining internal pressure within the container and the device operates as designed in accordance with the container design specifications;
    - When opening a safety device, as defined in 40 CFR §265.1081 to avoid an unsafe condition; and
    - When the container meets the definition of empty as defined in 40 CFR §261.7(b).

D.1.b.(2)(c) Movement

Reasonable care is taken to prevent damage to or rupture of containers. Before containers of hazardous waste are moved, they are checked for bulging ends or other conditions that might indicate a loss of integrity.

Containers are transported inside the facility using a variety of techniques, as appropriate. Drums are typically moved using a drum cart, forklift, loader, or bobcat loader with container grappling arms. Larger containers are moved with specialized equipment such as roll-on/roll-off trucks and trailers. Power units (tractors) are used to move end dumps, and roll-off trucks are used for the loading, unloading, and movement of roll-off containers and Mixing Bins. Other containers may be moved by flatbed trailers and straight bed trucks after being loaded with fork lifts, cranes, or other equipment.

Inspections of hazardous waste containers in CMUs are conducted as described in Section F. Inspections are also conducted after a CMU has been decontaminated for storage of incompatible materials, as described in Section D.1.d.(7).

D.1.b.(3) Container Decanting

Decanting only occurs in areas with secondary containment. These areas are:

- CSPs #4 & #5;
- RCRA(Pad 7)/PCB Building;
- Stabilization Facility;
- Containment Building (Debris portion) and Truck Unloading Apron #3; and
- Containment Building (Stabilization portion) and Truck Unloading Aprons #1 & #2.

Procedures for decanting are discussed in Section D.10.c.

D.1.b.(4) Stabilization in Containers

Stabilization in containers is performed at a number of units on-site (i.e., Stabilization Facility, Containment Building, CMUs). However, the type of waste permitted to be stabilized in containers varies between the different units.

Limited stabilization occurs in containers in those waste management units with secondary containment. This limited stabilization allows the facility to properly respond to liquids (e.g., non-recoverable/non-separable) discovered in containers of otherwise solid materials (e.g., separated during transportation). Stabilization is only conducted in containers with sufficient freeboard for mixing and the addition of reagents. Waste management units where stabilization is conducted are the Stabilization Facility, CSPs #4 & #5, the RCRA (Pad 7)/PCB Building, the Containment Buildings, and Truck Unloading Aprons #1, #2, & #3. With the exception of the Stabilization Facility, stabilization is usually performed in small (e.g., <250 gallon) containers. Bulk stabilization is performed in the Stabilization Facility in 52 yd^3 roll-off containers and inside the Containment Building in the stationary Mix Bin Tanks although other size containers can be accommodated in those areas and in the other waste management units.

Section D.9 describes the stabilization performed in the Containment Building. Section D.2 describes stabilization in the Mix Bin Tanks within the Containment Building. Sections D.10.a and D.10.b describe the stabilization processes utilized. Figure D-2 indicates the Stabilization Facility's process flow and Mixing Bin/tank movements.

D.1.b.(5) Container Crushing

Per 40 CFR §261.7, containers that have a volume of less than 110 gallons and once held hazardous waste are considered empty if no more than one (1) inch (2.5 centimeters) of residue remain on the bottom of the container. Containers larger than 110 gallons of volume are considered empty if no more than 0.3% by weight of the total capacity remains. Containers that have been emptied, visually inspected and determined to meet the criteria of 40 CFR §261.7 may be managed as an empty container (e.g. crushed etc.). A Container that once held an acute hazardous waste as defined in 40 CFR §§261.31, 32, or 261.33(e) must be triple rinsed prior to being considered empty. Once these containers are empty they may be crushed as described herein.

Empty containers to be disposed in a landfill must be crushed, shredded, or similarly reduced in volume to the maximum practical extent before burial in the landfill (40 CFR §264.315). Containers are crushed in areas with appropriate secondary containment such as the Stabilization Facility, Containment Building, or the landfill. Containers that are crushed in the landfill will be crushed 20 feet from any exposed surface of a liner. Crushing may be performed utilizing appropriate equipment (including excavators, bulldozers or loaders). Alternatively containers may be manually disassembled in any of the above listed waste management units (which all have secondary containment) or in the landfill.

Since it is not always possible to remove 100% of the liquid when emptying containers, if at any point during the disposal process (e.g., crushing activities etc.) free liquids are noted, appropriate amounts of non-biodegradable absorbent will be added to absorb the liquids, as necessary.

D.1.c Container Management Requirements - General

D.1.c.(1) General Storage Requirements

Containers are maintained in a closed condition unless:

- Waste is being added or removed;
- The container is being inspected or sampled;
- Reagents are being added;
- Treatment in the container is occurring at the Stabilization Facility (i.e., when the Mixing Bins are not being loaded with reagents, or being mixed, or immediately after mixing, and when being transferred to another authorized unit);
- The container is stored in the Containment Building and the required Air Pollution Control (APC) systems are functioning, if necessary; and
- The container meets the definition of 40 CFR Part §261.7, Residues of hazardous waste in empty containers.

Section D.1.b.(2)(b) describes the requirements of level 1 controls for containerized wastes that are subject to the requirements of 40 CFR 264 Subpart CC (IDAPA 58.01.05.008).

Solid wastes in non-bulk containers (e.g. bags, boxes and drums, etc.) placed into storage at CSA #1 will be elevated or otherwise protected from contact with accumulated liquid (40 CFR 264.175 (c)).

Drums and boxes may be double-stacked in storage. No containers are stacked more than two containers high except when banded or on shrink-wrapped pallets. These types of containers are often several units high on a single pallet. Smaller containers can be stacked higher as long as the total height of the stacked containers does not exceed (8) ft.

For operational purposes containers are normally placed in storage on pallets or other devices, however non-traditional containers (odd shaped) may be in storage without the use of pallets.

D.1.c.(2) Security, Safety and Emergency Equipment

All CMUs are located within the secure boundaries of the facility. Sources of ignition (e.g., open flames) are not allowed in the CMUs or in the immediate vicinity of any staged or stored ignitable hazardous waste unless the work is authorized by a Hot Work Permit. Any work requiring ignition sources or open flames are handled under the facility safety operating policies for Hot Work Permits as outlined in the facility Health and Safety Plan. In addition, each CMU has at least one dry chemical fire extinguisher available within or immediately adjacent to the unit.

CMUs used to store liquids have a minimum spill kit readily accessible consisting of an adequate number and size of drums and absorbent material. The absorbent material is either clay (e.g., floor-dri) or a package of sorbent pads or “pigs” that may be stored within one of the drums. This material may be used for over-packing leaking/damaged containers and containing spilled materials.

D.1.c.(3) Aisle Space

Adequate aisle space is provided within each CMU to permit easy access to all containers for routine inspections and emergency access (minimum aisle spaces of 24 in. between pallet rows and 24 in. between containers (except when containers are on trailers)). Building walls and/or edges of containment areas are also maintained at 24 in. between containers (except when containers are on trailers). A row consists of two containers or pallets placed on either or both sides of the aisle. With this layout, every container in a CMU can be readily inspected for leaks or deterioration. If a leaking container is identified, access is available to handle the container as necessary.

Bulk containers are stored with a minimum of 24 in. between them. Additionally, a minimum four (4) ft. wide aisle is located between every two rows of bulk containers to allow emergency equipment access. An example storage arrangement for bulk containers in CSA #1 is shown on Drawing # PRMI-R15.

D.1.c.(4) Incompatible, Ignitable and Reactive Wastes in Storage

Within the CMUs, incompatible wastes are kept in separate curbed areas to prevent incompatible wastes from contacting if a spill occurs. Facility personnel review the segregation requirements of each waste stream prior to placement in storage. Additional compatibility requirements are provided in Section C.6.4 and 6.5 of the WAP. USEI takes precautions to prevent the accidental ignition or reaction of ignitable or reactive waste per the requirements of IDAPA 58.01.05.008 {40 CFR §264.17}. This waste must be separated and protected from sources of ignition or reaction including but not limited to: open flames, smoking, cutting, and welding hot surfaces, frictional heat, sparks, spontaneous ignition, and radiant heat.

D.1.d Container Management Practices - Handling Containers with Free Liquids

D.1.d.(1) Secondary Containment System Design and Operation

CSP #4 is an unenclosed, subdivided storage, processing, and receiving area for containers with or without free liquids. It is curbed and constructed of sealed, reinforced concrete for containment. Drawing #PRMI-R11 shows the locations, dimensions and designations of the subdivided storage areas used for segregating incompatible wastes; this drawing also shows the locations and design of the containment systems, including slope and drainage information.

CSP #5 is an unenclosed, subdivided storage, processing, and receiving area for containers with or without free liquids. It is curbed and constructed of sealed, reinforced concrete for containment. Drawing #PRMI-R11, -C12, and -C13 show the locations, dimensions, and designations of the subdivided storage areas used for segregating incompatible wastes; these drawings also show the locations and design of the containment systems, including slope and drainage information.

The RCRA (Pad 7)/PCB Building is an enclosed storage, processing, and receiving area for containers with or without free liquids. The Pad 7 part of the building consists of a curbed, concrete floor for containment within a steel framed building. Drawings #PRMI-R21, PRMI-R22, PRMI-C16, and PRMI-C17 show the location, dimensions, and designation of the storage area; these drawings also show the locations and design of the containment systems, including slope and drainage information.

The Stabilization Facility is a subdivided, unenclosed storage, processing, and receiving area for containers with or without free liquids. It is curbed and constructed of sealed, reinforced concrete for containment. Drawing #'s PRMI-R31, -R32, -R33, -R34 and -R35 show the location, dimensions, and design of the containment systems, including slope and drainage information. Additional containment controls include dust hood/collector to minimize the release of reagents and waste during container loading; steel splash guard walls in the mixing area extend approximately eight (8) ft. above the tops of the Mixing Bins to contain any materials that may be splashed out during mixing operations. The process and instrumentation diagram (P&ID) shown on Drawing #PRMI-P31 indicates the general Stabilization Facility components. The specific design details of the Stabilization Facility processing system and the general arrangement of the material handling area support system of the Stabilization Facility are shown on Drawing #PRMI-R31 and -R32.
Truck Unloading Aprons #1 & #2, contiguous with the Stabilization portion of the Containment Building, is an unenclosed storage, processing, and receiving area for containers with or without free liquids. The aprons consist of individual reinforced concrete slabs with underlying 80 mil HDPE liners for containment. Drawing #'s 793P-C07, -C08, C09 and -C14 show the dimensions of these storage areas; these drawings also show the location and design of the containment systems, including slope and drainage information.

Truck Unloading Apron #3, contiguous with the Debris portion of the Containment Building, is an existing, unenclosed storage, processing, and receiving area for containers with or without free liquids. The apron consists of three (3) curbed, reinforced concrete slabs with underlying 80 mil HDPE primary and secondary liners for containment.

These aprons do not have segregated areas and, therefore, cannot store incompatible waste on the same apron. Drawing #'s D2020-A02 and -R02 show the locations, dimensions, and designations of the subdivided storage areas used for segregating incompatible wastes; these drawings also show the locations and design of the containment systems, including slope and drainage information. Additionally, Drawing #'s 773C-S01, S02, S03, and S04 show the access truck ramp over Apron Area #3.

D.1.d.(2) Requirement for the Base or Liner to Contain Liquids

CSPs #4 & #5 and the Stabilization Facility, which are utilized for containing waste with free liquids have sealed concrete to minimize the potential of migration of liquids through the concrete surface. The Containment Building and their associated aprons are underlain by HDPE liners for primary and/or secondary containment.

In general, all of the CMUs are maintained free of cracks or gaps that could allow the infiltration of liquid through the concrete or steel barrier. Significant cracks that would affect the slabs impervious features found in the flooring or curbing of the CMUs are filled and the coating or sealant reapplied, as necessary, to maintain compliance with 40 CFR §264.175(b). Small cracks may be present along one of the seams, however, the system is designed with appropriate redundancy and the crack may only occur on a sacrificial component of the containment system. Documentation of system integrity will be maintained accordingly as outlined in Section F.

Appendix D.1.2 provides information on coatings and sealers that may be used with specific types of waste. Appendix D.1.2.a provides examples of products appropriate for sealing the containment areas that may be used at the facility, however equivalent or superior sealants may be utilized. This includes CMUs that manage liquids and dioxin-bearing wastes that are constructed of materials compatible with the wastes stored. Engineering evaluations of the structural integrity of the base or floor of each CMU used to store liquid hazardous wastes are provided in Appendix D.1.3.

D.1.d.(3) Containment System Drainage

The base or floor of the CMUs (CSPs #4& #5, RCRA(Pad 7)/PCB Building, CSA #1, the Stabilization Facility, and Truck Unloading Aprons #1, #2, & #3) are sloped to drain and remove liquids resulting from leaks, spills, or precipitation.

D.1.d.(4) Containment System Capacity

Calculations of the containment system capacity are provided in Appendix D.1.1. These calculations were completed when the storage areas were constructed. All containers are stored on pallets and a correction for reduction in area due to the footprint of the pallets is not included as the volume of the pallets is negligible. However, Tables D-1 and D-1A summarize these calculations and identify the volume of the largest container both with and without free liquids, the total volume of containers with free liquids within the CMU, and the containment system capacity for each CMU and segregated area. Additionally, Tables D-1 and D-1A demonstrate the containment system for each CMU managing liquids has sufficient capacity to contain the greater of 10% of the volume of all the containers that can be stored in an area, or the volume of the largest container, plus the precipitation from a 25-year, 24-hour storm event (for unenclosed CMUs).

All of the facility's CMUs are designed for storage of liquids except for CSA #1 which is designated for solids (i.e., no free liquids) storage only. Allowable hazardous waste inventories, including non-bulk and bulk, for each CMU are summarized in Table D-1. All drum inventories are based on 55-gallon drums stacked two drums high. In no case will the maximum drum inventory of containers with free liquids inventory be exceeded in a given CMU, however, if the containers do not contain free liquids, the limits summarized in Table D-1 may be exceeded if all other operating procedures are maintained.

D.1.d.(5) Control of Run-On

Run-on into the containment system of each CMU is prevented as follows:

- Each CMU has perimeter berms, curbs, ramps, and/or walls that prevent run-on from adjacent areas.
- All of the unenclosed CMUs are elevated from the surrounding ground surface so potential run-on is diverted.
- The facility has a storm water management system designed, constructed, and maintained to control 25-year, 24-hour storm events.

Precipitation falling directly on the unenclosed CMUs (other than CSA #1) is contained by dedicated containment systems. The containment system for each of the unenclosed CMUs has been sized to hold the greater of 10% of the maximum allowable storage volume for that specific storage area, or the volume of the largest container plusthe volume of precipitation from a 25-year, 24-hour storm event. For run-off purposes CSA #1 is sloped to the North to Northeast to drainage collection points. Diversion channels exist to South and Southwest of the unit to control run-on (Drawing PRMI-R15).

Drawings that indicate the perimeter berms, curbs, ramps and/or walls to prevent run-on from entering the CMUs are referenced in Section D.1.c.(1). The *Surface Water Management Plan* that describes the management of storm water run-off for the facility is contained in Appendix D.4.7.
Containers in the RCRA (Pad 7)/PCB Building and the Containment Buildings are not exposed to precipitation since they are enclosed buildings. Additionally, Drawing #PRMI-T04 and -T12 indicate the grading adjacent to these units, designed to minimize run-on.

D.1.d.(6) Removal of Liquids from Containment System

Spilled or leaked wastes and accumulated precipitation are removed from the containment systems in a timely manner to prevent overflow of the containment system. Typical equipment used to remove these liquids includes vacuum trucks, portable submersible pumps, hoses, fixed piping, etc. If any recoverable liquids are discovered in the containment systems removal of the material is scheduled and implemented within two (2) working days, unless the liquid is frozen. Within two (2) working days after the liquid is no longer frozen, the liquids are removed. Rain water is removed as soon as practicable. Any spills or leaks of waste are remediated as described in the Contingency Plan. Residues from the containment systems are handled as described in the facility WAP (Section C.11.7). If the collected residue is determined to be uncontaminated storm water, then it may be incorporated into the stabilization process as process or make-up water.

D.1.d.(7) Storage Unit Decontamination

As previously stated, only one chemical compatibility class of materials is stored in a segregated sub-area of a CMU at any one time.

If it is determined that decontamination of a CMU is necessary in order to store a different, incompatible waste, then the following decontamination options are available:

- The area is swept and, as necessary, washed with appropriate cleansers or solvents to remove residues, if any. The removal of residues prevents subsequent potential reaction with incompatible wastes. If significant residues remain, high pressure washing or abrasive cleaning may be necessary to complete cleaning.
- Waste residues are properly characterized in accordance with the requirements of the WAP.
- Following cleaning, a visual inspection is conducted to verify the unit has been sufficiently cleaned so as to preclude reactions between the new waste to be placed in the unit and the residue of the incompatible waste previously stored there, if any. Inspections also examine the integrity of the concrete flooring, curbing, and containment system trench drain/sump while full access is available. In accordance with the procedures detailed in Section F, significant cracks (e.g., non-hair line cracks) discovered in the sealant or base are repaired prior to placing containers in that container storage area.

D.1.e Container Management Practices - Handling Containers without Free Liquids

Within the CMUs previously described, containers without free liquids are managed and stored in a manner similar to containers that contain free liquids.

Only containers without free liquids (i.e., wastes without free standing liquids or that pass the paint filter test) will be managed in CSA #1. In addition, no wastes carrying the waste codes of F020, F021, F022, F023, F026 or F027 will be placed within this unit for staging or storage. Drawing # PRMI-R15 shows the locations, dimensions, designations, and surrounding drainage information of CSA #1.

D.1.e.(1) Test for Free Liquids

CSA #1 will only store waste containers that have no visible free standing liquid or contain waste that passes the paint filter test described in the facility WAP.

D.1.e.(2) Container Management Unit Drainage

CSA #1 has a compacted soil base with no containment. This unit is designed with diversion channels to minimize run-on from entering and is sloped to shed precipitation. As such, the CSA #1 will not accumulate any precipitation.

Unit Name		Maximum Non-Bulk or Bulk Container Capacity By Area & Unit		Non-Bulk Containers with Free Liquid (1.)					Bulk Containers with Free Liquid (1.)					Non-Bulk/Bulk Containers without Free Liquid				Largest Container with Free Liquids (11.)		Greater Value of Largest Contaiaer Volume or 10% of Total Volume of Typical Containers (10.)	Required Containment Volume with Free Liquids	Actual Containment Volume of Containment System	Surface Area of Storage Area	Design Volume for Rainfall (3.)	Remarks/ Comments
				Number of Typical Containers (2.)	Typical Size of Containers (2.)		Total Volume of Typical Containers	10% of Total Volume of Typical Containers	Number of Typical Containers (2.)	Typical Size of Containers (2.)		Total Volume of Typical Containers	10% of Total Volume of Typical Containers	Number of Typical Containers	Typical Size of Containers		Total Volume of Typical Containers								
		Gallons	yd^3		Gallons	yd^3	Gallons	Gallons		Gallons	yd^3	Gallons	Gallons		Gallons	yd^3	Gallons	Gallons	yd^3	Gallons	Gallons	Gallons	ft^2	Gallons	
CONTAINER MANAGEMENT UNITS																									
Container Storage Pad 4 (CSP #4)	Area 4A	279,310	1,383	1,000	55	0.27	55,000	5,500	1	19,841	52	19,841	1,984	14	10,503	52	147,037	19,841	98	19,841	27,931	27,931	7,415	8,090	
	Area 4B	32,420	161	240	55	0.27	13,200	1,320	1	2,420	10	2,420	242	4	10,503	52	42,011	2,420	11	2,420	3,242	3,242	754	822	
	Area 4C	31,200	154	240	55	0.27	13,200	1,320	1	2,319	10	2,319	232	4	10,503	52	42,011	2,319	11	2,319	3,120	3,120	735	801	
	Area 4D	11,390	56	120	55	0.27	6,600	660	1	738	3	738	74	2	10,503	52	21,005	738	3	738	1,139	1,139	367	401	
	Area 4E	10,580	52	120	55	0.27	6,600	660	1	657	3	657	66	2	10,503	52	21,005	657	3	660	1,061	1,058	367	401	
Total - Container Storage Pad 4		**364,900**	**1,807**	**1,720**	**55**	**0.27**	**94,600**					**25,975**					**364,900**				**36,493**	**36,490**	**9,638**	**10,515**	
Container Storage Pad 5 (CSP #5)	Area 5A	26,770	133	280	55	0.27	15,400	1,540	12	808	4	9,695	969	2	10,503	52	21,005	1,643	8	1,643	2,677	2,677	948	1,034	
	Area 5B	19,750	98	160	55	0.27	8,800	880	12	808	4	9,695	969	2	10,503	52	21,005	927	4	969	2,017	1,975	960	1,048	
	Area 5C	23,520	116	220	55	0.27	12,100	1,210	12	808	4	9,695	969	2	10,503	52	21,005	1,304	6	1,304	2,352	2,352	960	1,048	
	Area 5D	47,650	236	460	55	0.27	25,300	2,530	12	2,020	10	24,237	2,424	4	10,503	52	42,011	2,671	13	2,671	4,766	4,766	1,921	2,095	
	Area 5E	56,130	278	580	55	0.27	31,900	3,190	12	2,020	10	24,237	2,424	4	10,503	52	42,011	3,545	17	3,545	5,613	5,613	1,896	2,068	
	Area 5F	27,660	137	300	55	0.27	16,500	1,650	12	808	4	9,695	969	2	10,503	52	21,005	1,732	8	1,732	2,766	2,766	948	1,034	
	Area 5G	19,400	96	150	55	0.27	8,250	825	12	808	4	9,695	969	2	10,503	52	21,005	892	4	969	2,017	1,940	960	1,048	
	Area 5H	21,730	108	190	55	0.27	10,450	1,045	12	808	4	9,695	969	2	10,503	52	21,005	1,126	5	1,126	2,174	2,174	960	1,048	
Total - Container Storage Pad 5		**242,610**	**1,201**	**2,340**	**55**	**0.27**	**128,700**					**106,642**					**242,610**				**24,382**	**24,263**	**9,554**	**10,423**	based on individual containment areas (6.)
RCRA(Pad 7)/PCB Building (CSP #7) (4.)(8.)	Area 7A	33,820	167	614	55	0.27	33,770	3,377	12	2,020	10	24,240	2,424	3	10,503	52	31,509	3,382	1	3,382	3,520	3,533	2,500	n/a	Covered area, no reductions for rainfall.
	Area 7B	33,840	168	614	55	0.27	33,770	3,377	12	2,020	10	24,240	2,424	3	10,503	52	31,509	3,384	1	3,384	3,520	3,533	2,500	n/a	Covered area, no reductions for rainfall.
	Area 7C	22,900	113	320	55	0.27	17,600	1,760	12	808	4	9,696	970	2	10,503	52	21,006	2,290	1	2,290	1,760	2,544	1,000	n/a	Covered area, no reductions for rainfall.
	Area 7D	24,310	120	320	55	0.27	17,600	1,760	12	808	4	9,696	970	2	10,503	52	21,006	2,431	1	2,431	1,760	2,611	1,000	n/a	Covered area, no reductions for rainfall.
	Area 7E	25,170	125	320	55	0.27	17,600	1,760	12	808	4	9,696	970	2	10,503	52	21,006	2,517	1	2,517	1,760	2,611	1,000	n/a	Covered area, no reductions for rainfall.
	Area 7F	22,770	113	320	55	0.27	17,600	1,760	12	808	4	9,696	970	2	10,503	52	21,006	2,277	1	2,277	1,760	2,611	1,000	n/a	Covered area, no reductions for rainfall.
	Area 7G	19,420	96	320	55	0.27	17,600	1,760	12	808	4	9,696	970	2	10,503	52	21,006	1,942	1	1,942	1,760	2,544	1,000	n/a	Covered area, no reductions for rainfall.
Total - RCRA(Pad 7)/PCB Building		**182,230**	**902**	**2,828**	**55**	**0.27**	**155,540**	**15,554**				**96,960**		**16**			**168,048**	**18,223**		**18,223**	**15,840**	**19,987**	**10,000**	**n/a**	
Stabilization Facility	Area #1	42,011	208	300	55	0.27	16,500	1,650	4	4,039	20	16,158	1,616	4	10,503	52	42,011	4,739	23	4,739	6,261	6,261	1,395	1,522	
	Area #2	126,032	624	1,200	55	0.27	66,000	6,600	12	10,503	52	126,032	12,603	12	10,503	52	126,032	13,084	64	13,084	18,544	18,544	5,005	5,460	
	Sub-Total Apron Area	**161,579**	**800**	**1,500**	**55**	**0.27**	**82,500**	**8,250**				**142,190**	**14,219**				**168,042**				**24,805**	**24,805**	**6,400**	**6,982**	
	Area #3	21,005	104	0	0	0.00	0	0	1	10,503	52	10,503	1,050	2	10,503	52	21,005	10,839	53	10,839	12,118	12,118	1,173	1,280	
	Area #4	31,508	156	0	0	0.00	0	0	0	0	0	0	0	3	10,503	52	31,508	3,213	15	3,213	4,982	4,982	1,622	1,769	
	Area #5	52,513	260	0	0	0.00	0	0	5	10,503	52	52,513	52,513	2	10,503	52	21,005	13,714	67	52,513	54,949	16,150	2,233	2,436	
	Area #6	31,508	156	0	0	0.00	0	0	3	10,503	52	31,508	31,508	2	10,503	52	21,005	14,727	72	31,508	33,941	17,160	2,230	2,433	
	Area #7	94,524	468	0	0	0.00	0	0	9	10,503	52	94,524	94,524	9	10,503	52	94,524	37,106	183	94,524	101,038	43,620	5,971	6,514	upto el 68.33' - bulk only
	Area #8	94,524	468	0	0	0.00	0	0	9	10,503	52	94,524	94,524	9	10,503	52	94,524	37,475	185	94,524	100,676	43,628	5,640	6,153	upto el 68.33' - bulk only
	Area #9	21,005	104	80	55	0.27	4,400	440	0	0	0	0	0	2	10,503	52	21,005	454	2	454	3,739	3,739	3,011	3,285	upto 66.75'
	Sub-Total Remaining Area	**282,764**	**1,400**	**80**	**55**	**0.27**	**4,400**	**440**	**27**			**283,572**		**29**			**304,577**					**141,397**	**21,880**	**23,870**	
	Total - Stabilization Facility	**444,343**	**2,200**	**1,580**	**55**	**0.27**	**86,900**	**8,690**				**425,761**					**472,619**					**166,203**	**28,280**	**30,851**	
Truck Unloading Apron # 1 (located adjacent to the Containment Building, Stabilization Portion)		14,138	70	120	55	0.27	6,600	660	11	606	3	6,665	667	1	14,138	70	14,138	705	3	705	1,545	1,545	770	840	
Truck Unloading Apron # 2 (located adjacent to the Containment Building, Stabilization Portion)		14,138	70	120	55	0.27	6,600	660	11	606	3	6,665	667	1	14,138	70	14,138	705	3	705	1,545	1,545	770	840	
Truck Unloading Apron #3 (located adjacent to the Containment Building, Debris Portion)	Area No. 1	14,138	70	120	55	0.27	6,600	660	6	1,616	8	9,695	969	1	14,138	70	14,138	1,865	9	1,865	3,125	3,125	1,155	1,260	
	Area No. 2	14,138	70	120	55	0.27	6,600	660	6	1,616	8	9,695	969	1	14,138	70	14,138	1,814	8	1,814	3,074	3,074	1,155	1,260	
	Area No. 3	14,138	70	120	55	0.27	6,600	660	6	1,616	8	9,695	969	1	14,138	70	14,138	1,947	9	1,947	3,177	3,177	1,128	1,230	
Total - Truck Unloading Apron #3		**42,415**	**52**	**360**	**55**	**0.27**	**19,800**					**29,084**		**3**	**14,138**	**70**	**42,415**					**9,376**	**3,438**	**3,750**	
Container Storage Area 1 (CSA #1)		662,475	3,280	0	0	0.00	0	0	0	0	0	0		82	8,079	40	662,475	0	0	0	0	0	0	0	(5.)
Total - Container Storage Built		1,276,497	6,320																						
Containment Building (Debris Portion)(4.)	Mixing Bin Tank No. 3 (Permit Limit)	12,000	226	0	0	0	0	0	1	12,000	59	12,000	1,200	1	45,646	226	45,646	12,000	59	12,000	12,000	45,135	0	0	(9.)
	Mixing Bin Tank No. 3 (Tot. Capacity)	60,996	302	0	0	0	0	0	1	60,996	302	60,996	6,100	1	60,996	302	60,996	60,996	302	60,996	N/A	N/A	0	0	(9.)
	Mixing Bin Tank No. 4 (Permit Limit)	12,000	226	0	0	0	0	0	1	12,000	59	12,000	1,200	1	45,646	226	45,646	12,000	59	12,000	12,000	45,135	0	0	(9.)
	Mixing Bin Tank No. 4 (Tot. Capacity)	60,996	302	0	0	0	0	0	1	60,996	302	60,996	6,100	1	60,996	302	60,996	60,996	302	60,996	N/A	N/A	0	0	(9.)
	Sort Floor No. 1	18,178	90	120	55	0.27	6,600	660	10	808	4	8,079	808	1	18,178	90	18,178	875	4	875	875	875	0	0	upto el 100'-0"
	Sort Floor No. 2	18,178	90	120	55	0.27	6,600	660	10	808	4	8,079	808	1	18,178	90	18,178	853	4	853	853	853	0	0	upto el 100'-0"
	Sort Floor No. 3	18,178	90	120	55	0.27	6,600	660	10	808	4	8,079	808	1	18,178	90	18,178	853	4	853	853	853	0	0	upto el 100'-0"
	Bldg Floor Below Elev 100'-0"	16,158	80	152	55	0.27	8,360	836	10	808	4	8,079	808	2	8,079	40	16,158	875	4	875	875	875	0	0	not including the sort floors
	Bldg Floor From Elev 100'-0" to Elev 100'-6"	210,053	1,040	1,048	55	0.27	57,640	5,764	20	10,503	52	210,053	21,005	20	8,079	40	161,579	42,703	211	42,703	42,703	42,703	0	0	not including the sort floors
Total - Containment Building (Debris Portion) w/ Sort Floors		**252,468**	**1,250**	**1,560**	**55**	**0.27**	**85,800**					**242,369**					**232,270**					**46,159**	**0**	**0**	
Total - Containment Building (Debris Portion) w/ Mixing Bin Tanks		**250,211**	**1,724**									**242,132**					**299,729**								
Total - Containment Building (Debris Portion) with Excavator Ramps																						**45,135**			
Containment Building (Stabilization Portion) (4.)	Mixing Bin Tank No. 1	22,390	111	0	0	0.00	0	0	1	22,390	111	22,390	2,239	1	22,390	111	22,390	22,390	111	22,390	22,390	22,390	0	0	upto el 97.33' with free board
	Mixing Bin Tank No. 1	25,993	129	0	0	0.00	0	0	1	25,892	128	25,593	2,559	1	25,993	128	25,993	25,993	128	25,993	25,993	25,993	0	0	upto el 99.33' without free board
	Floor only upto el 99.58'	80,790	400	60	55	0.27	3,300	330	1	4,039	20	4,039	404	10	8,079	40	80,790	4,275	21	4,275	4,275	4,275	0	0	from el 97.33' upto el 99.58'
	Floor only upto el 100.0'	80,790	400	200	55	0.27	11,000	1,100	5	6,059	30	30,296	3,030	10	8,079	40	80,790	6,926	34	6,926	6,926	6,926	0	0	from el 97.33' upto el 100.0'
	Floor only upto el 100.5'	105,027	520	400	55	0.27	22,000	2,200	10	10,503	52	105,027	10,503	10	8,079	40	80,790	14,503	71	14,503	14,503	14,503	0	0	from el 97.33' upto el 100.5'
	Mixing Bin Tank No. 2	21,632	107	0	0	0.00	0	0	1	21,632	107	21,632	2,163	1	21,632	107	21,632	21,632	107	21,632	21,632	21,632	0	0	upto el 97.33' with free board
	Mixing Bin Tank No. 2	25,198	125	0	0	0.00	0	0	1	25,198	124	25,198	2,520	1	25,198	124	25,198	25,198	124	25,198	25,198	25,198	0	0	upto el 99.33' without free board
	Floor only upto el 99.58'	80,790	400	60	55	0.27	3,300	330	1	4,039	20	4,039	404	10	8,079	40	80,790	4,262	21	4,262	4,262	4,262	0	0	from el 97.33' upto el 99.58'
	Floor only upto el 100.0'	80,790	400	200	55	0.27	11,000	1,100	5	6,059	30	30,296	3,030	10	8,079	40	80,790	7,054	34	7,054	7,054	7,054	0	0	from el 97.33' upto el 100.0'
	Floor only upto el 100.5'	105,027	520	400	55	0.27	22,000	2,200	10	10,503	52	105,027	10,503	10	8,079	40	80,790	15,268	75	15,268	15,268	15,268	0	0	from el 97.33' upto el 100.5'
Total - Containment Building (Stabilization Portion)		**260,844**	**1,293**	**800**	**55**	**0.27**	**44,000**					**260,844**					**212,770**					**80,962**	**0**	**0**	
Total - Containment Building Storage Available		**494,836**	**2,450**	**2,360**	**55**	**0.27**	**129,800**					**503,213**					**445,040**					**127,121**	**0**	**0**	

Footnotes:

1. Wastes with Codes F020, F021, F022, F023, F026 and F027 will be stored following the procedures for Wastes with Free Liquids.
2. The number and size of typical containers is for example only. For materials with free liquids, the maximum size of the container is as listed in the column titled "Volume of Largest Container with Free Liquids."
3. Design volume for rainfall is based on an intensity for a 25 year, 24 hour storm event = 1.75 inches
4. Enclosed unit with run-on controls, therefore rainfall volume not included for containment volume calculations.
5. Wastes with Codes F020, F021, F022, F023, F026 and F027 will not be stored in these units. See Appendix D.4.9.
6. Totals are for compatibility between the areas within the unit unless noted.
7. Totals are without compatibility between the areas within the unit.
8. TSCA regulates liquid storage in PCB portion
9. Mix Bin Tank Nos. 3 and 4 have a permitted capacity for liquid waste management of 12,000 gallons each. The capacities for waste without free liquids is 226 cubic yards each.
10. Containers are stored on pallets within secondary containment areas. Volume of containment consumed by pallets is negligible, and therefore is not deducted from maximum volume.
11. The largest container with free liquids is assumed to be a container with volume equal to the available containment capacity.

Table D-1A

Container Storage Location	Maximum Allowable Inventory of Containers	Maximum Allowable Liquid Inventory (gal)	Largest Liquid Volume Allowed in a Single Container (gal)	Actual Containment Capacity (gal)	Required Containment Capacity (gal)
Pad 4					
4A	1,000	279,310	19,841	27,931	27,931
4B	240	32,420	2,420	3,242	3,242
4C	240	31,200	2,319	3,120	3,120
4D	120	11,390	738	1,139	1,139
4E	120	10,580	657	1,058	1,058
Pad 5					
5A	280	26,770	1,643	2,677	2,677
5B	160	19,750	927	1,975	1,975
5C	220	23,520	1,304	2,352	2,352
5D	460	47,650	2,671	4,765	4,765
5E	580	56,130	3,545	5,613	5,613
5F	300	27,660	1,732	2,766	2,766
5G	150	19,400	892	1,940	1,940
5H	190	21,730	1,126	2,173	2,173
RCRA (Pad 7) /PCB Storage Building					
7A	614	33,820	3,382	3,382	3,382
7B	614	33,840	3,384	3,384	3,384
7C	320	22,900	2,290	2,290	2,290
7D	320	24,310	2,431	2,431	2,431
7E	320	25,170	2,517	2,517	2,517
7F	320	22,770	2,277	2,277	2,277
7G	320	19,420	1,942	1,942	1,942
Stabilization					
Area #1	300	42,011	4,739	6,261	6,261
Area #2	1200	126,032	13,084	18,544	18,544
Area #3	NS	21,005	10,839	12,118	12,118
Area #4	NS	31,508	3,213	4,982	4,982
Area #5	NS	52,513	13,714	16,150	16,150
Area #6	NS	31,508	14,727	17,160	17,160
Area #7	NS	94,524	37,106	43,620	43,620
Area #8	NS	94,524	37,475	43,628	43,628
Area #9	80	4,540	454	3,739	3,739
Truck Unloading Apron #1	120	15,450	705	1,545	1,545
Truck Unloading Apron #2	120	15,450	705	1,545	1,545

Container Storage Location	Maximum Allowable Inventory of Containers	Maximum Allowable Liquid Inventory (gal)	Largest Liquid Volume Allowed in a Single Container (gal)	Actual Containment Capacity (gal)	Required Containment Capacity (gal)
Truck Unloading Apron at Contain. Building					
Area #1	120	31,250	1,865	3,125	3,125
Area #2	120	30,740	1,814	3,074	3,074
Area #3	120	31,770	1,947	3,177	3,177

NS: Not Specified, the total number of containers is not provided since areas typically store a wide range of container sizes, however the total allowable liquid inventory is provided, which will be used in the event areas are used for storage.
Note: Table D-1A provides a summary of storage capacities for the most commonly used areas. Refer to Table D-1 for detail on other areas

DWG. NO. PRMI-C16
PROJ. NO. 12U-4133

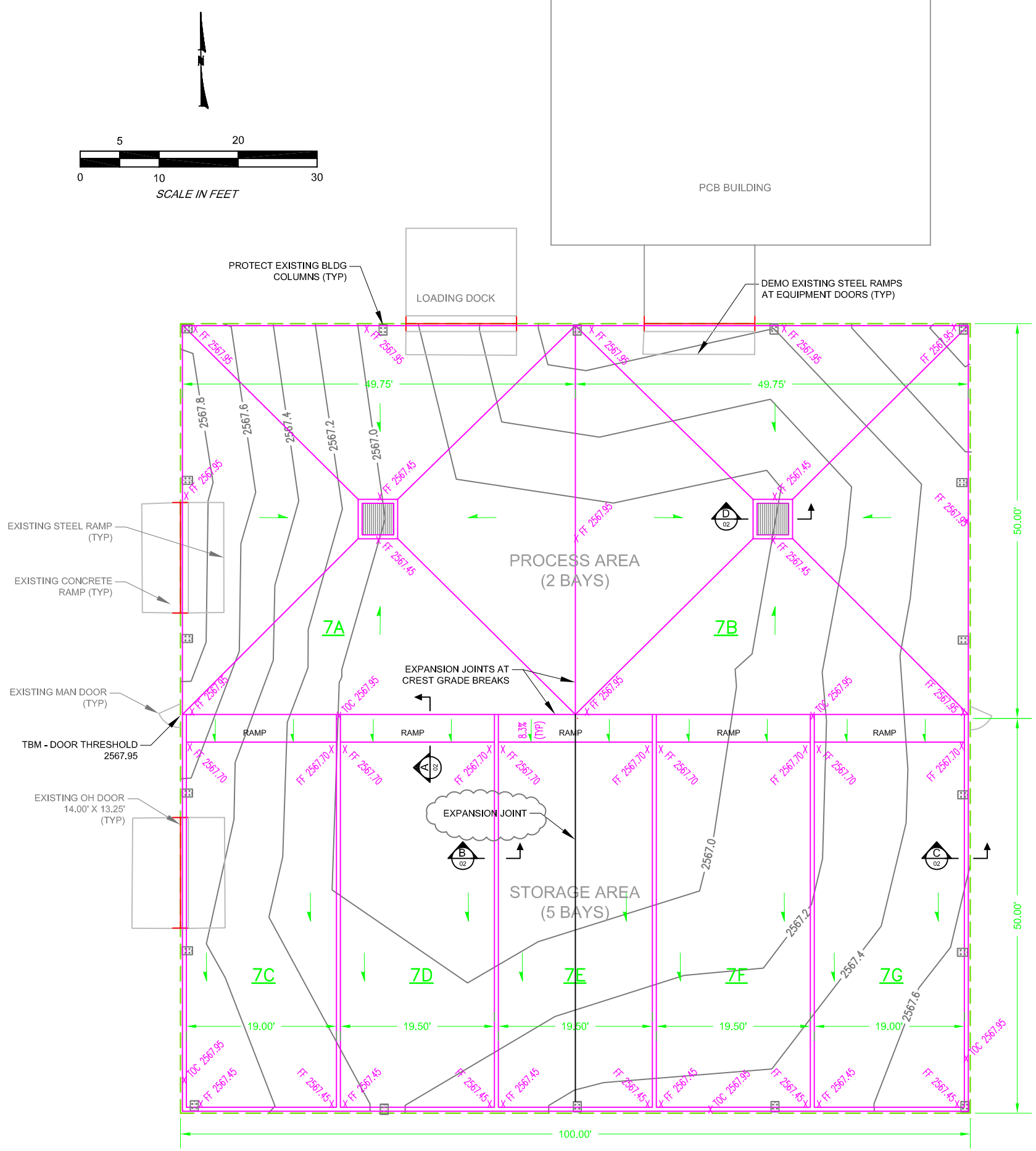

LEGEND

FF	FINISH FLOOR PLAN ELEVATION
TOC	TOP OF CURB PLAN ELEVATION
TBM	TEMPORARY BENCH MARK
	PRE-CONSTRUCTION SUBGRADE TOPOGRAPHY
	EXISTING BUILDING LINE

NOTES:

1. EXCAVATE EXCESS AGGREGATE SUBGRADE MATERIALS AND STOCKPILE AS NEEDED. COMPACT REMAINING AGGREGATE SUBGRADE MATERIALS TO 95% OF MODIFIED PROCTOR (ASTM D 1557).
2. ALL REINFORCING STEEL IS GRADE 60.
3. ALL CONCRETE ON PROJECT REQUIRED TO ACHIEVE 4,000 PSI COMPRESSIVE STRENGTH IN 28 DAYS.
4. FLOOR SLABS SHALL BE CURED WITH AN APPROVED CURING COMPOUND. CURING COMPOUND TO BE COMPATIBLE WITH FINISH MATERIALS.
5. EPOXY COATING TO BE APPLIED ON ALL FINISHED CONCRETE SURFACES.
6. CONSTRUCTION JOINTS AND CONTROL JOINT LAYOUT TO BE APPROVED BY ENGINEER PRIOR TO SETTING FORMS.
7. PLACE 3 - #5 X 8'-0" BARS IN SLABS AT RE-ENTRANT CORNERS OF SUMPS.
8. PRE-CONSTRUCTION TOPOGRAPHIC SURVEY OF INTERIOR AGGREGATE SURFACE PERFORMED BY EAGLE LAND SURVEY ON APRIL 28, 2011.
9. DIMENSION LABELS HAVE PRECEDENCE OVER SCALED DIMENSIONS
10. ANY DISCREPANCIES SHALL BE BROUGHT TO THE ATTENTION OF THE ENGINEER.
11. AS BUILT CONTAINMENT VOLUMES SURVEYED BY EAGLE LAND SURVEY ON NOVEMBER 7, 2012.

PAD NO. 7 CONTAINMENT VOLUMES

DESCRIPTION	AS-BUILT SURVEYED CONTAINMENT (GAL)
PROCESS AREA 7A	3,382
PROCESS AREA 7B	3,384
STORAGE AREA 7C	2,290
STORAGE AREA 7D	2,431
STORAGE AREA 7E	2,517
STORAGE AREA 7F	2,277
STORAGE AREA 7G	1,942

REV.	BY	DATE	CHK'D	DATE	DESCRIPTION	ENGL SURV	PROJ MGR
B	WF	10/2/12			AS-BUILT CONDITIONS		
A	WF	7/13/12			REGULATORY REVIEW - PERMIT MODIFICATION		

USEcology Idaho
an American Ecology company

SITE B
GRAND VIEW, IDAHO
US EPA ID NO. IDD 073 114 654

TITLE: CONTAINER STORAGE PAD NO. 7 STORAGE AND PROCESSING AREAS GRADING PLAN

DRAWN BY: VJT	DATE 5/11	FILE CODE PRMIC16_REVB	REV. NO.
CHECKED	DATE	DWG. NO. PRMI-C16	B
PROJ. MGR.	DATE	PROJ. NO. 12U-4113	

DWG. NO. PRMI-C17
PROJ. NO. 12U-4133

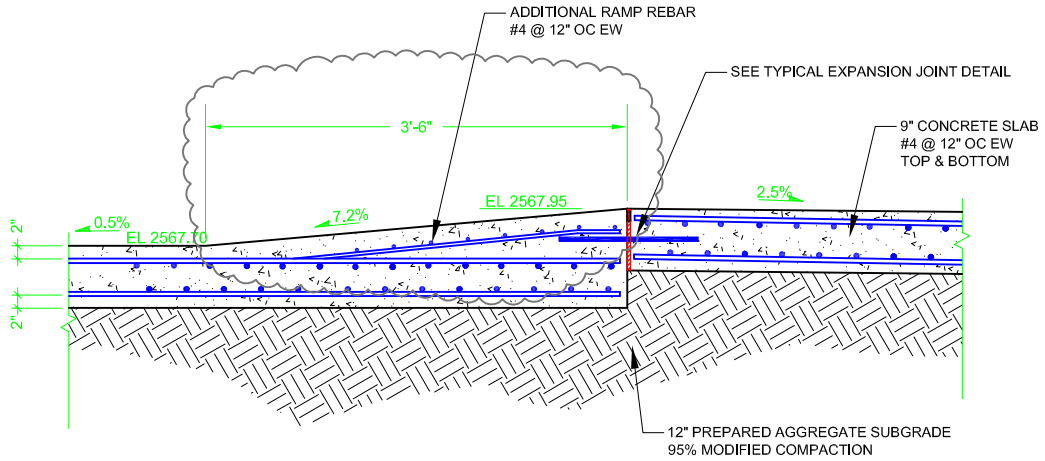

TYPICAL RAMP SECTION (A / 01)

N.T.S.

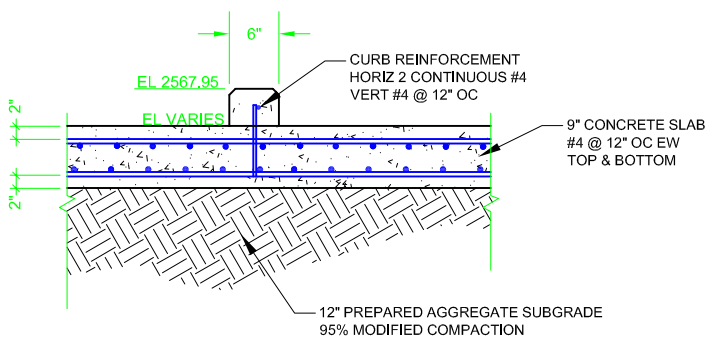

TYPICAL INTER-BAY CURB (B / 01)

N.T.S.

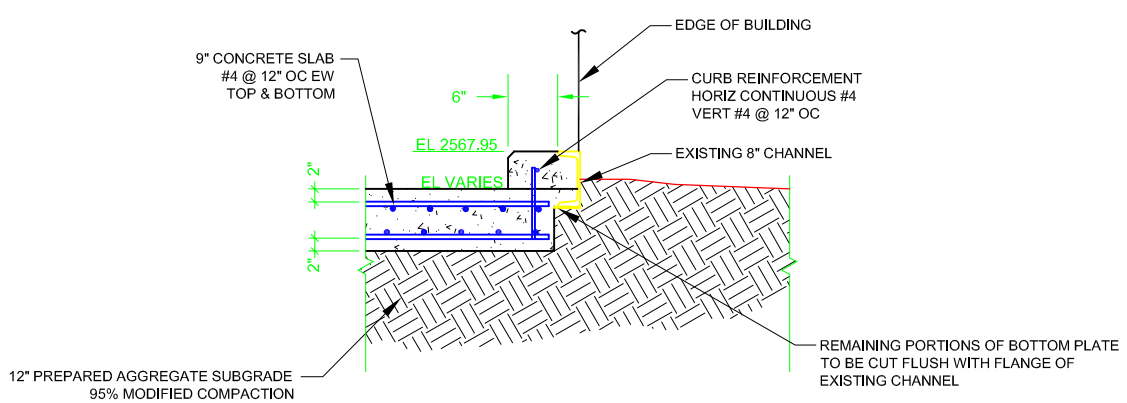

TYPICAL PERIMETER CURB (C / 01)

N.T.S.

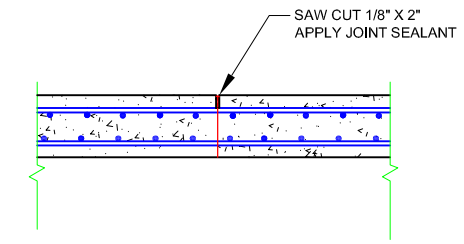

TYPICAL CONTROL JOINT DETAIL

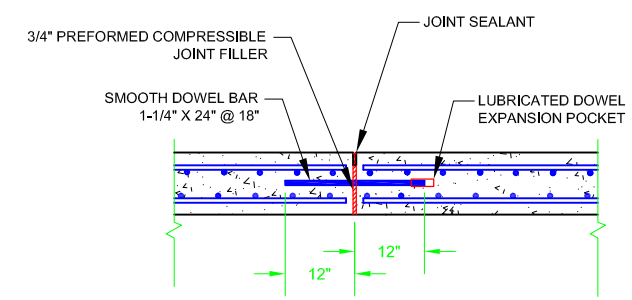

TYPICAL EXPANSION JOINT DETAIL

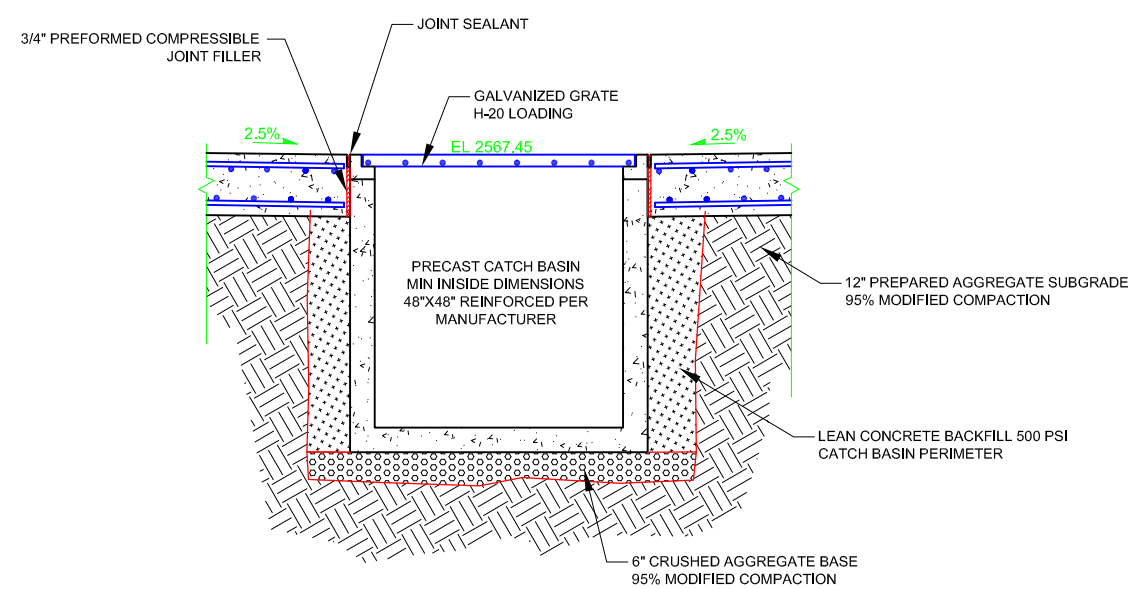

TYPICAL SUMP SECTION (D / 01)

N.T.S.

NOTES:

1. COMPACT UPPER 8 iNCHES OF EXISTING SUBGRADE MATERIALS TO 95% OF MODIFIED PROCTOR (ASTM D 1557).
2. PROVIDE 3/4" X 3/4" CHAMFER ON ALL EXPOSED CONCRETE EDGES.
3. EPOXY COATING TO BE APPLIED ON ALL FINISHED CONCRETE SURFACES.
4. CONSTRUCTION JOINTS AND CONTROL JOINT LAYOUT TO BE APPROVED BY ENGINEER PRIOR TO SETTING FORMS.

REV.	BY / DATE	CHK'D / DATE	DESCRIPTION	PROJ. ENGR. / DATE	SURV. CHIEF / DATE
B	WF 12/9/13		AS-BUILT CONDITIONS		
A	WF 7/19/13		REGULATORY REVIEW – PERMIT MODIFICATION		

USEcology Idaho
an American Ecology company

SITE B
GRAND VIEW, IDAHO
US EPA ID NO. IDD 073 114 654

TITLE: CONTAINER STORAGE PAD NO. 7
STORAGE AND PROCESSING AREAS
SECTIONS AND DETAILS

DRAWN BY / DATE	FILE CODE	REV. NO.
WJT 5/11	PRMIC16_REV0	
CHECKED / DATE	DWG. NO. PRMI-C17	
PROJ. MGR. / DATE	PROJ. NO. 12U-4113	B

DWG. NO. PRMI-R11
PROJ. NO. PRMI

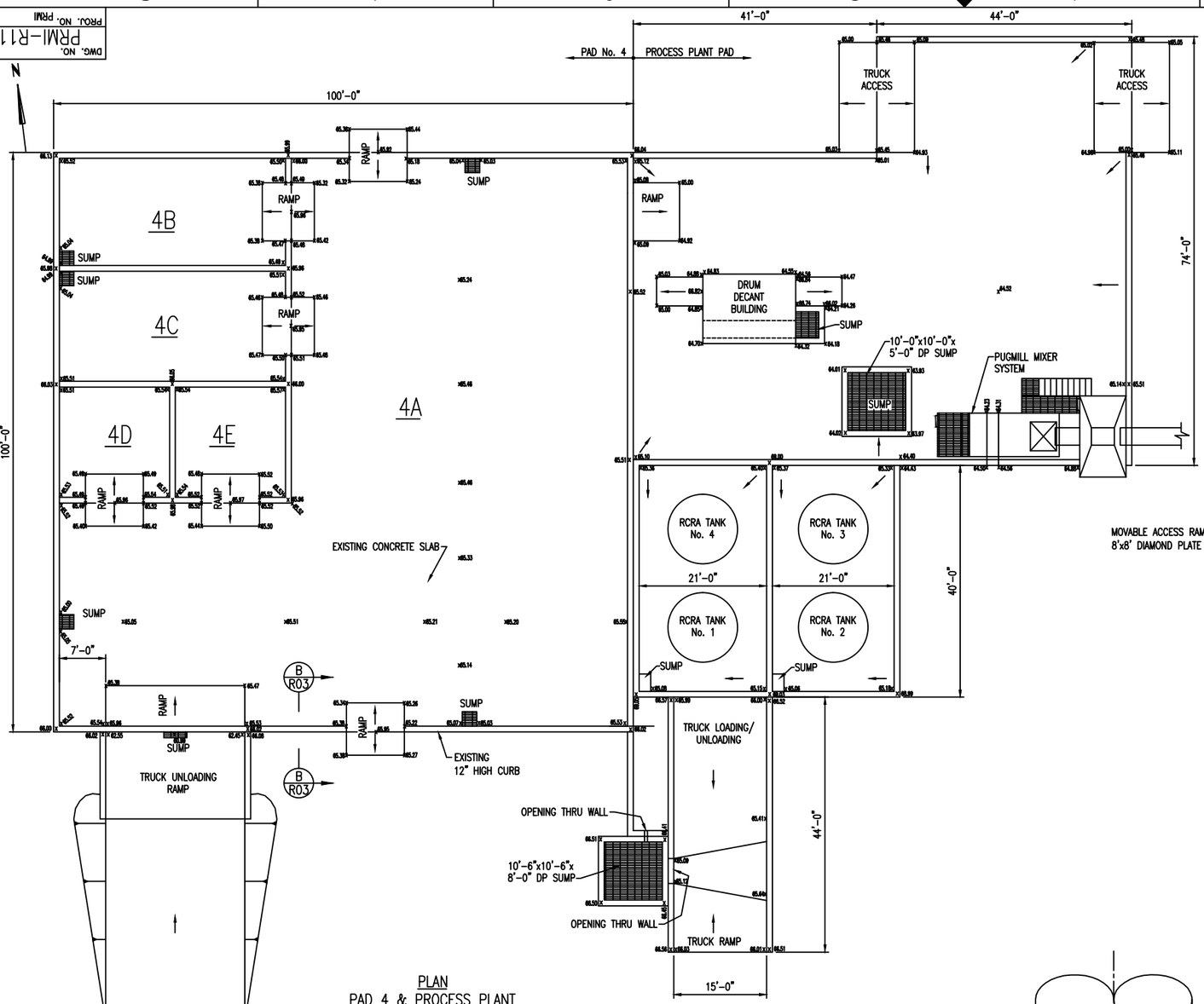

PLAN
PAD 4 & PROCESS PLANT

0 5 10 20 30 40 50

SCALE: IN FEET

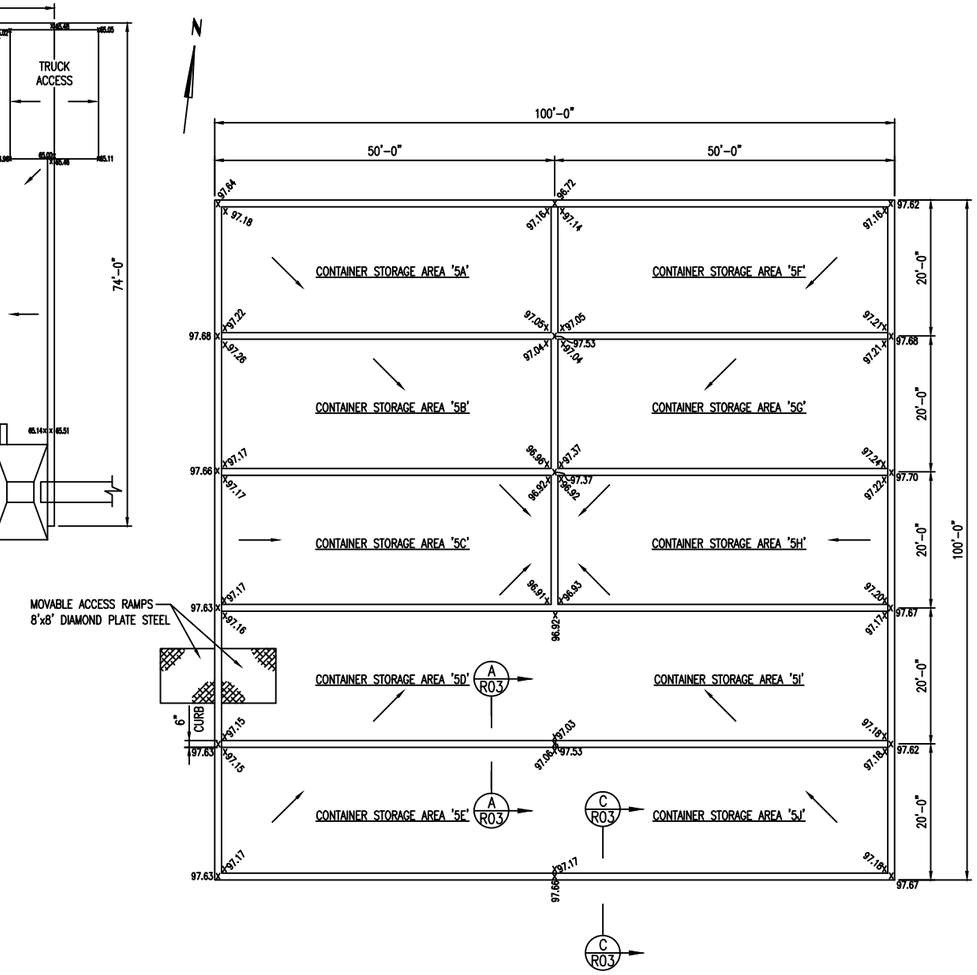

PLAN – PAD 5

0 5 10 20 30 40 50

SCALE: IN FEET

NOTE:
ALL ELEVATIONS ADD 2500 FEET

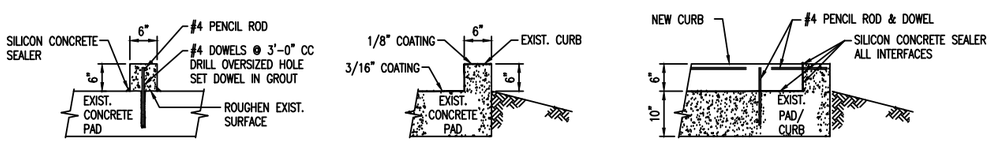

SECTION A–A
SCALE: NTS

SECTION B–B
SCALE: NTS

SECTION C–C
SCALE: NTS

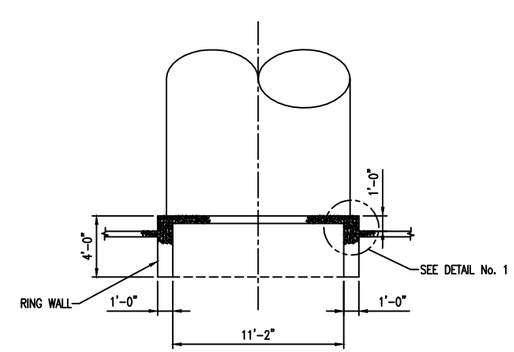

TYPICAL TANK FOUNDATION
SCALE: NTS

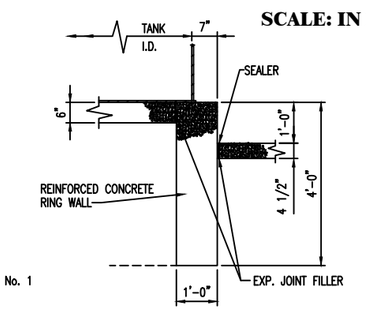

DETAIL No 1
SCALE: NTS

REV.	BY	CHK'D	DESCRIPTION	PROJ. ENGR.	SUPV. ENGR.
B	RJM 4/8/03	- -	2003 PERMIT RENEWAL	- -	JH 4/8/03
A	EHH 7/28/98	- -	ISSUED FOR B PERMIT RENEWAL APPLICATION	- -	- -

USEcology Idaho
an American Ecology company

SITE B
GRAND VIEW, IDAHO
US EPA ID NO. IDD 073 114 654

TITLE:
TYPICAL GENERAL ARRANGEMENT
CONTAINER STORAGE AREAS
PAD NOS. 4 & 5, AND PLANT PAD

DRAWN BY: JZ	DATE 12/16/97	SCALE:	FILE CODE PRMIR11B	REV. NO.
CHECKED	DATE	ENGINEER DATE	DWG. NO. PRMI–R11	B
PROJ. MGR.	DATE	APPROVED DATE	PROJ. NO. PRMI	

DWG. NO. PRMI-R21
PROJ. NO. PRMI

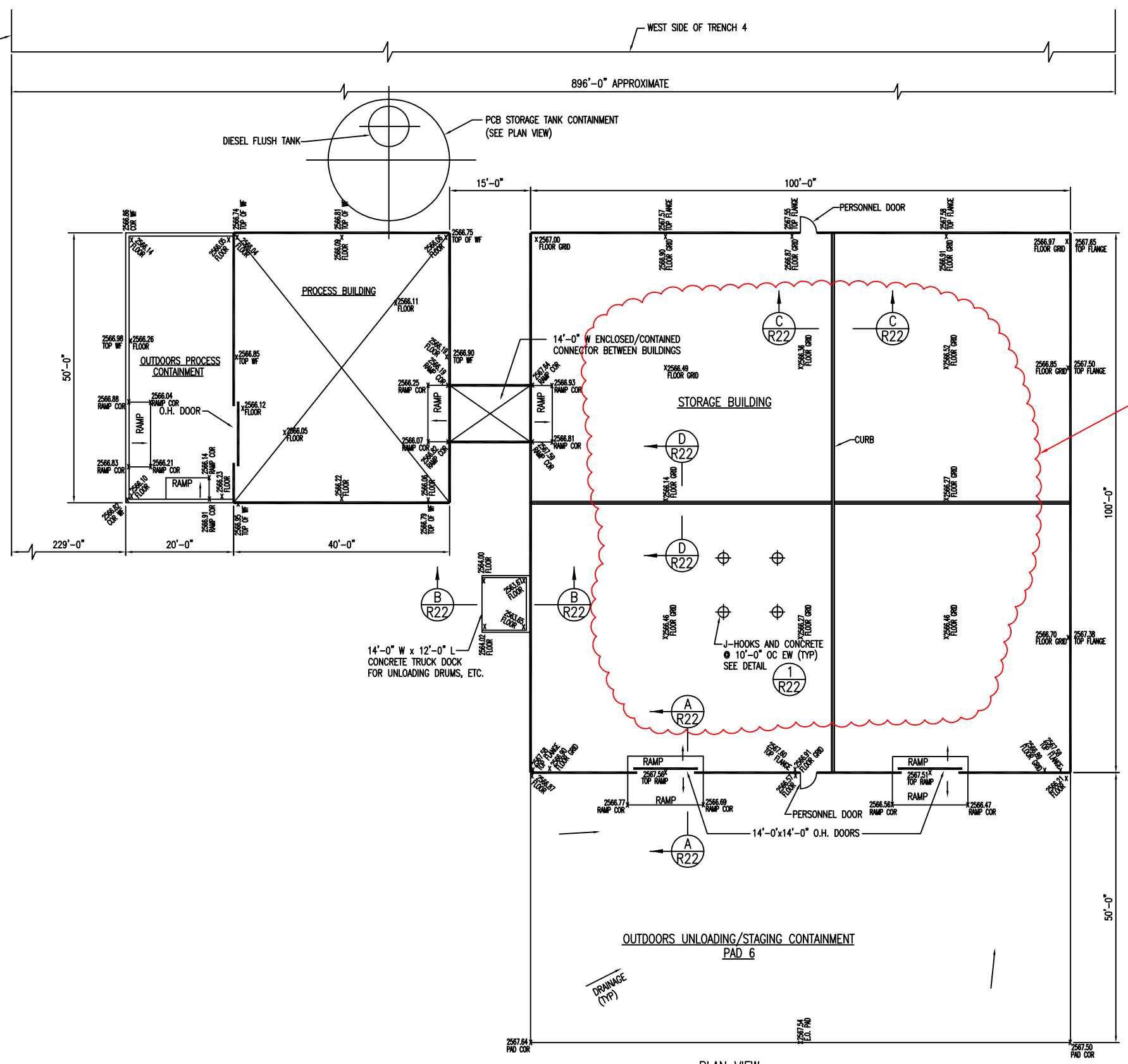

PLAN VIEW
RCRA/PCB STORAGE BUILDING AND PCB PROCESSING BUILDING
SCALE: NTS

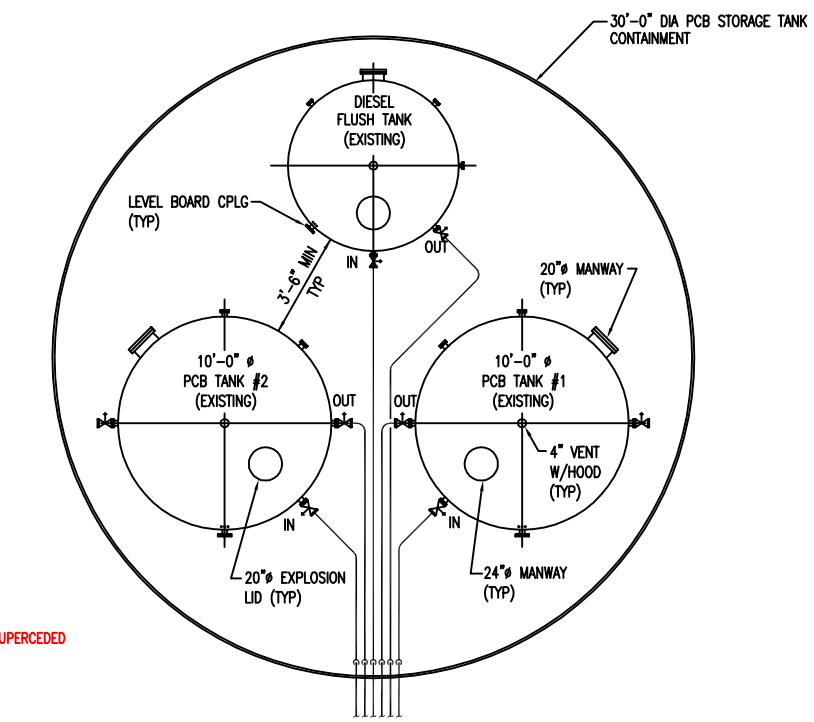

PLAN VIEW
PCB STORAGE TANK CONTAINMENT LAYOUT
SCALE: NTS

NOTES:

1. THE FLOOR THE PROCESS BUILDING IS CONSTRUCTED OF 1/4" CARBON STEEL PLATE, CONTINUOUS LAP (3" MIN) WELDED WITH AN 8" HIGH CONTAINMENT WALL TYPICAL.
2. OUTDOORS CONTAINMENT AT THE PROCESS BUILDING IS ALSO 1/4" CARBON STEEL PLATE WITH AN 8" HIGH CONTAINMENT WALL.
3. OUTDOORS UNLOADING/STAGING CONTAINMENT AT THE STORAGE BUILDING IS REINFORCED CONCRETE WITH 8" HIGH (NOMINAL) CURB WALL ON THREE (3) SIDES. SLAB IS SLOPED TO DRAIN TO SOUTHEAST FOR COLLECTION.
4. THE TRUCK DOCK IS REINFORCED CONCRETE WITH DRAINAGE TO A CENTRAL SUMP.
5. STEEL CONTAINMENT FLOOR WAS REMOVED FROM STORAGE BUILDING AND HAS BEEN REPLACED WITH CONCRETE CONTAINMENT SLABS, AS SHOWN ON DRAWINGS PRMI-C16 AND PRMI-C17.

REV.	BY / DATE	CHK'D / DATE	DESCRIPTION	PROJ ENGR / DATE	SUPV ENGR / DATE
C	VJT / 4/22/13	-- / --	UPDATED FLOOR REMOVAL / PAD 7 REF.	-- / --	-- / --
B	RMM / 4/16/03	- / -	2003 PERMIT RENEWAL	- / -	JH / 4/16/03
A	EMH / 7/28/97	- / -	ISSUED FOR B PERMIT RENEWAL APPLICATION	- / -	- / -

USEcology Idaho
an American Ecology company

SITE B
GRAND VIEW, IDAHO
US EPA ID NO. IDD 073 114 654

TITLE: GENERAL ARRANGEMENT – RCRA/PCB STORAGE BLDG & PCB PROCESSING BLDG, AND PCB STORAGE TANK FACILITY – PLANS

DRAWN BY: JZ	DATE 12/29/97	SCALE:	FILE CODE PRMIR21B	REV. NO.
CHECKED	DATE	ENGINEER DATE	DWG. NO. PRMI-R21	C
PROJ. MGR.	DATE	APPROVED DATE	PROJ. NO. PRMI	

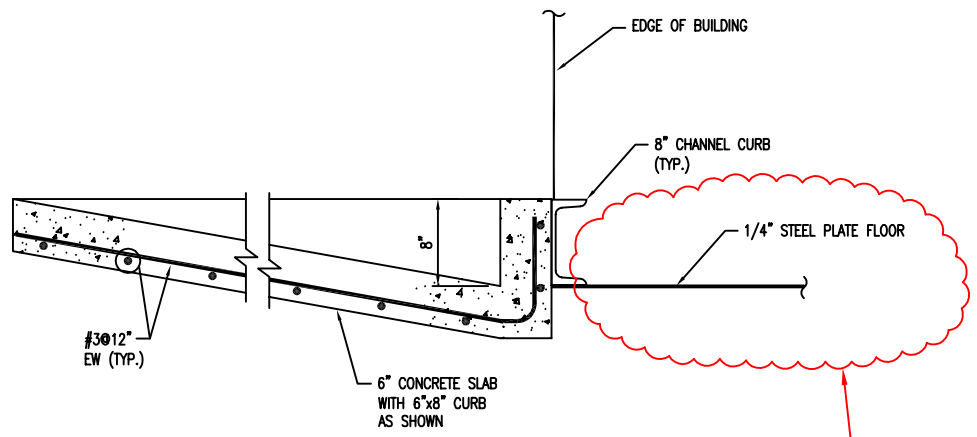

SECTION THRU CONCRETE PAD @ STORAGE BUILDING INTERFACE

SECTION A / R21
SCALE: NTS

STEEL FLOOR SUPERCEDED SEE NOTE 1

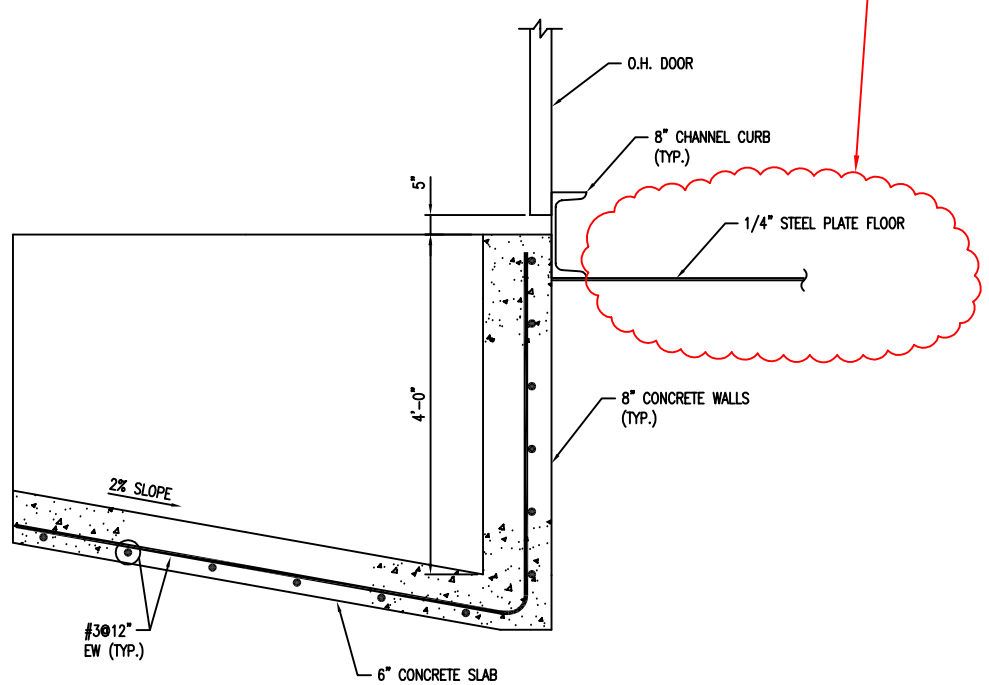

SECTION THRU CONCRETE TRUCK DOCK @ STORAGE BUILDING INTERFACE

SECTION B / R21
SCALE: NTS

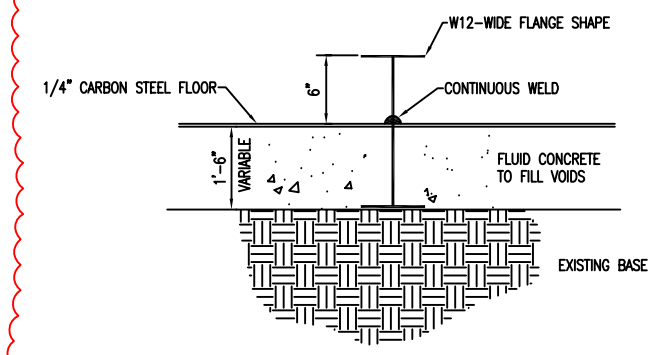

SECTION C / R21
SCALE: NTS

NOTE:

6" WILL BE MINIMUM HEIGHT OF CURB "ON TOP" BUT MAY BE MORE DUE TO STEEL CONTOUR.

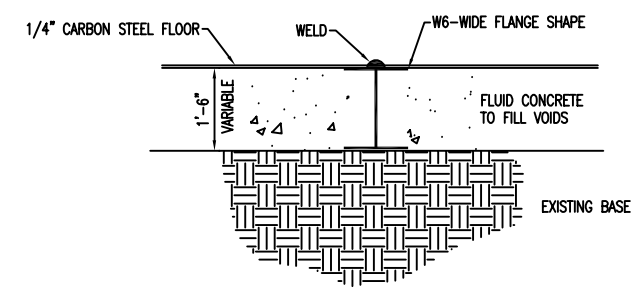

SECTION D / R21
SCALE: NTS

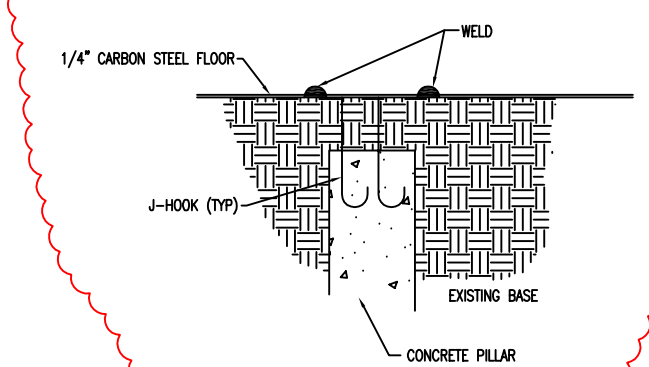

DETAIL 1 / R21
SCALE: NTS

NOTES:

1. STEEL CONTAINMENT FLOOR WAS REMOVED FROM STORAGE BUILDING AND HAS BEEN REPLACED WITH CONCRETE CONTAINMENT SLABS AND CURBS, AS SHOWN ON DRAWINGS PRMI-C16 AND PRMI-C17
2. CONTAINMENT CAPACITY OF 100'-0"x50'-0" CONCRETE UNLOADING/STAGING PAD ON WEST SIDE OF STORAGE BULDING IS APPROXIMATE 12,500 GAL.

REV.	BY / DATE	CHK'D / DATE	DESCRIPTION	PROJ. ENGR.	SUPV. ENGR.
C	VJT 4/22/12	-- --	UPDATED FLOOR REMOVAL / PAD 7 REF.	-- --	-- --
B	RJM 4/22/03	- -	2003 PERMIT RENEWAL	- -	JH 4/22/03
A	EBH 7/29/96	- -	ISSUED FOR B PERMIT RENEWAL APPLICATION	- -	- -

USEcology Idaho
an American Ecology company

SITE B
GRAND VIEW, IDAHO
US EPA ID NO. IDD 073 114 654

TITLE: GENERAL ARRANGEMENT – RCRA/PCB STORAGE BLDG & PCB PROCESSING BLDG, AND PCB STORAGE TANK FACILITY – SECTIONS

DRAWN BY: JZ	DATE 12/30/97	SCALE:	FILE CODE PRMIR22B	REV. NO.
CHECKED	DATE	ENGINEER DATE	DWG. NO. PRMI-R22	C
PROJ. MGR.	DATE	APPROVED DATE	PROJ. NO. PRMI	