IDAHO
DEPARTMENT OF ENVIRONMENTAL QUALITY

HWMA STORAGE and TREATMENT PERMIT for the

IDAHO NUCLEAR TECHNOLOGY and ENGINEERING CENTER, and the RADIOACTIVE WASTE MANAGEMENT COMPLEX

on the

IDAHO NATIONAL LABORATORY

EPA ID NO. ID4890008952

Effective Date: April 27, 2009
Revision Date: August 19, 2016
Book 2 of 3

HWMA/RCRA PART B PERMIT

FOR THE IDAHO NATIONAL LABORATORY

Volume 18 – Idaho Nuclear Technology and Engineering Center

APPENDIX 1

Debris Treatment Processes
Holdup and Collection Tanks
CPP-659/-1659 Storage
CPP-666 FDP Cell Container Storage and Slab Tank Storage
Other Miscellaneous Treatment Processes
RMWSF (CPP-1617) Container Storage Area

FACILITY PHOTOGRAPHS

Revision Date: July 2, 2015

PHOTOGRAPH LIST

Page Number	Photo Number	Description of Photo
1	PN-96-98-1-5	CPP-1659 Exterior Looking North East
2	PN-96-98-1-0	Vehicle Entry CPP-659 Room 417 Looking East
3	PN-99-0082-1-15	Decontamination Sinks Enclosure CPP-659 Looking South East
4	PN-99-0082-1-17	Decontaminations Sinks Enclosure CPP-659 Room 415 Looking East
5	PN-99-0082-1-24	Entrance into Decontamination Sinks Enclosure CPP-659 Room 415 Looking East
6	PN-96-243-1-30	Decontamination Sinks CPP-659 Room 415 Looking South East
7	PN-96-243-1-35	Interior Decontamination Sinks Enclosure CPP-659 Room 415 Looking South
8	PN-96-243-1-31	Ultrasonic Cleaner Sink CPP-659 Room 415 Looking South
9	PN-96-98-2-28	Low-Level Decontamination Shielded Storage CPP-659 Room 415 Looking South
10	PN-99-0082-1-25	Curb Around Chemical Make-up Tanks CPP-659 Room 415 Looking North West
11	No Photo Number Available	VAC PAC (w/o Head and Hose)
12	PN-96-0098-2-17	Exterior Steam Spray Booth (w/o Glove Box) CPP-659 Room 418 Looking North West
13	PN-96-243-1-12	Interior Steam Spray Booth (w/o False Floor) CPP-659 Room 418 Looking South
14	PN-99-0082-1-3	Exterior Steam Spray Booth (w/Glove Box) CPP-659 Room 418 Looking North West
15	PN-99-0082-1-10	Interior Steam Spray Booth w/False Floor) CPP-659 Room 418 Looking South

Page Number	Photo Number	Description of Photo
16	PN-99-0082-1-7	Glove Box CPP-659 Room 418 Looking North West
17	PN-99-0082-1-8	Glove Box CPP-659 Room 418 Looking South West
18	PN-81-4767	Valve Cubicle CPP-659 Looking West
19	PN-96-98-1-19	Filter Cell CPP-659 Looking South
20	PN-81-4278	CPP-659 Room 308 Overhead Crane and Room 323 Hatch Covers Looking East
21	PN-82-5127	Looking at a transfer into CPP-659 Room 309 from the Crane Maintenance and Transfer Area Room 323
22	PN-96-85-1-12	CPP-659 HEPA Filter Leaching System Room 309 Looking South
23	PN-82-5131	CPP-659 Room 308 Decontamination Cell Looking West
24	PN-96-98-1-7	CPP-666 FAST Building Exterior Looking South East
25	PN-96-84-1-9	CPP-666 FDP Cell Container Storage -13’-0’ Level Looking East
26	1617-16	RMWSF Main Gate CPP-1617 Storage Area Looking South
27	1617-01	RMWSF Inside CPP-1617 Temporary Structure Looking East
28	1617-11	RMWSF Mixed Waste Storage Boxes Paved Area Looking North East
29	98-546-2-2	RMWSF High Radiation Storage Area with Radioactive and Mixed Waste Boxes (with covers) Paved Area Looking East
30	1617-14	RMWSF Cargo Containers Paved Area Looking North
31	89-566-1-15	RMWSF CPP-1617 Exterior Looking North East
32	1617-07	RMWSF CPP-1617 Building Looking North West

Page Number	Photo Number	Description of Photo
33	95-1015-1-8	RMWSF Interior Cargo Container, Drip Pan, Inspector, and Liquid Waste Electric Base Board Heater Lower Left Looking West
34	1617-09	RMWSF Heated Cargo Containers Paved Area Looking South West
35	ILTSF 003.jpg	External View of an Interim Storage Container
36	ILTSF 001.jpg	View of Empty Interim Storage Container
37	ILTSF 005.jpg	Example of Shielded Overpack Container
38	Not Available (N/A)	RH TRU Cask Loading Platform
39	N/A	RH TRU Removable Lid Container (RLC) Inspection Stand (empty)
40	N/A	RH TRU Cask Loading and RLC Inspection Areas
41	N/A	RH TRU View of Overhead Crane
42	N/A	RH TRU RLC Inspection Station with Empty RLC
43	N/A	RH TRU RLC with Lid Removed and Placed on Lid Inspection Stand
44	N/A	RH TRU Personnel Operating Station
45	N/A	RH TRU Lag Storage Rack
46	N/A	RH TRU Cask Storage Rack and Impact Limiter Staging Stand (both empty)
47	N/A	RH TRU Funnel for Loading Inserts into Casks
48	N/A	RH TRU Transport Trailer with 72B Shipping Cask
49	N/A	RH TRU Decon Cell with Repackaged Drum

Page Number	Photo Number	Description of Photo
50	N/A	RH TRU Decon Cell with Turntable/Sorting Table with Downdraft Repackage Waste Container
51	N/A	RH TRU Crane Maintenance and Transfer Area (Room 323)
52	N/A	RH TRU Real-Time Radiography (RTR) Access Port into Room 306
53	N/A	RH TRU RTR Equipment
54	N/A	RH TRU Decontamination Access Tent into Remote Decon Cell (Room 308)
55	N/A	RH TRU Port Cover over Remote Decon Cell (Room 308) located in Decontamination Access Tent
56	N/A	RH TRU Shielded Operating Area in the Equipment Decon Room
57	N/A	RH TRU Equipment Decon Room (418) Overpack Area - 55-gallon Waste Drum
58	N/A	Argon Repackaging Station (ARS) unit for use in CPP-659 Room 308
59	N/A	ARS unit showing a lexan wall with a drum out port. The wall is replaceable with either a wall with a drum out port or a solid wall. The ARS unit will be installed in CPP-659, Room 308
60	N/A	ARS 1 unit prior to installation into the CPP-666 FDP Cell
61	N/A	ARS 2 unit prior to installation into the CPP-666 FDP Cell
62	N/A	ARS 2 unit with empty waste containers prior to installation into the CPP-666 FDP Cell

CPP-1659 Exterior
Looking North East

PN-96-98-1-5

Vehicle Entry
CPP-659 Room 417
Looking East

PN-96-98-1-0

Decontamination Sinks Enclosure
CPP-659
Looking South East

PN 99-0082-1-15

Decontamination Sinks Enclosure
CPP-659 Room 415
Looking East

PN-99-0082-1-17

Entrance into Decontamination Sinks Enclosure
CPP-659 Room 415
Looking East

PN-99-0082-1-24

Decontamination Sinks
CPP-659 Room 415
Looking South East

PN-96-243-1-30

Interior Decontamination Sinks Enclosure
CPP-659 Room 415
Looking South

PN-96-243-1-35

Ultrasonic Cleaner Sink
CPP-659 Room 415
Looking South

PN-96-243-1-31

Low-Level Decontamination Shielded Storage
CPP-659 Room 415
Looking South

PN-96-96-2-28

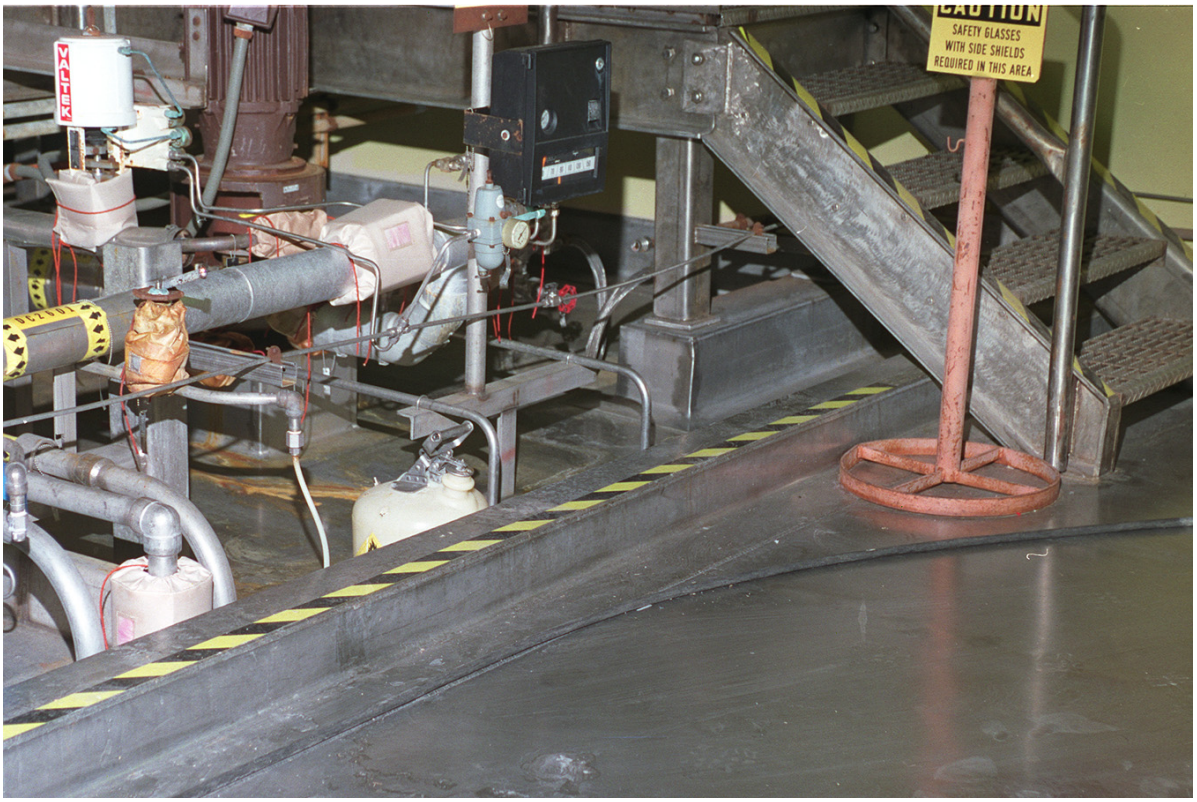

Curb Around Chemical Make-up Tanks
CPP-659 Room 415
Looking North West

PN-99-0082-1-25

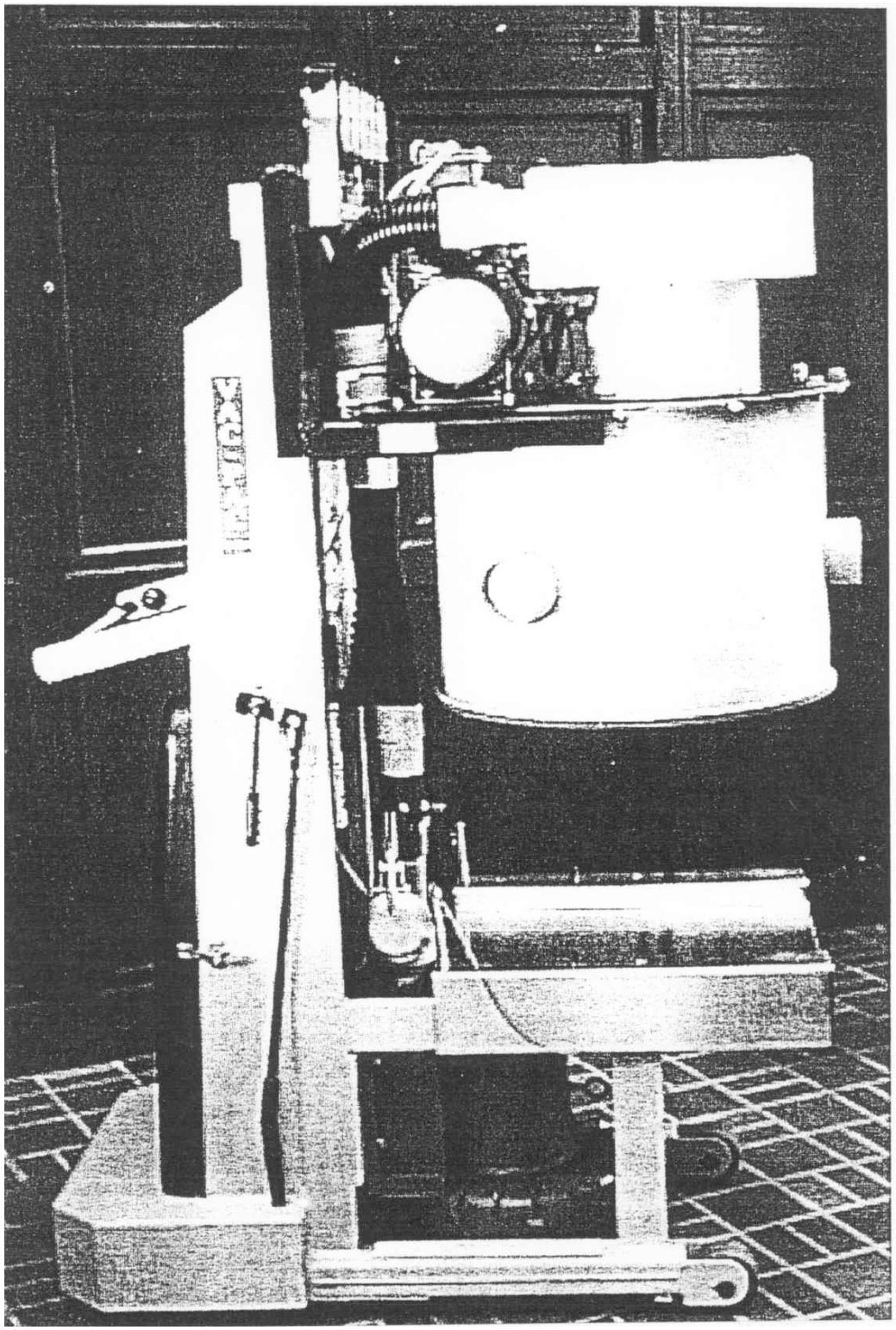

VAC PAC System (w/o Head and Hose)

(Photocopy)

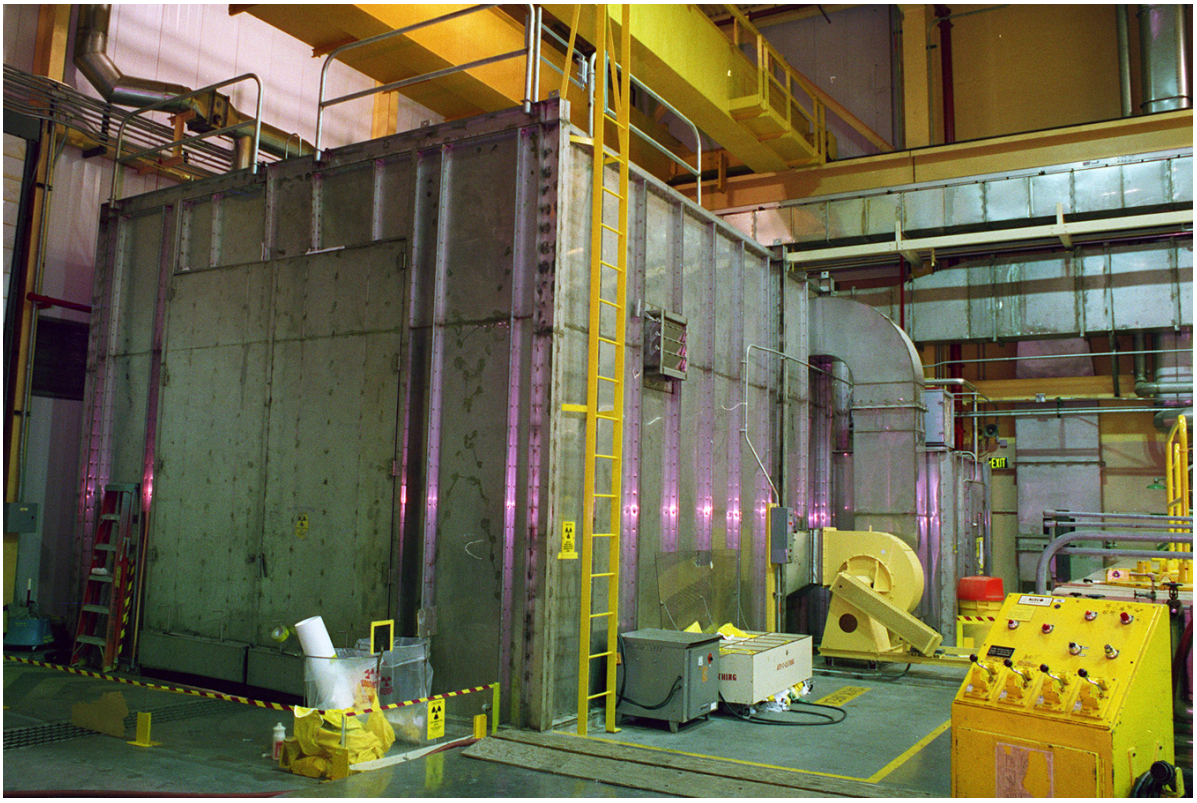

Exterior Steam Spray Booth (w/o Glove Box)
CPP-659 Room 418
Looking North West

PN-96-0098-2-17

Interior Steam Spray Booth (w/o false floor)
CPP-659 Room 418
Looking South

PN-96-243-1-12

Exterior Steam Spray Booth (w/Glove Box)
CPP-659 Room 418
Looking North West

PN-99-0082-1-3

Interior Steam Spray Booth (w/False floor)
CPP-659 Room 418
Looking South

PN-99-0082-1-10

Glove Box
CPP-659 Room 418
Looking North West

PN-99-0082-1-7

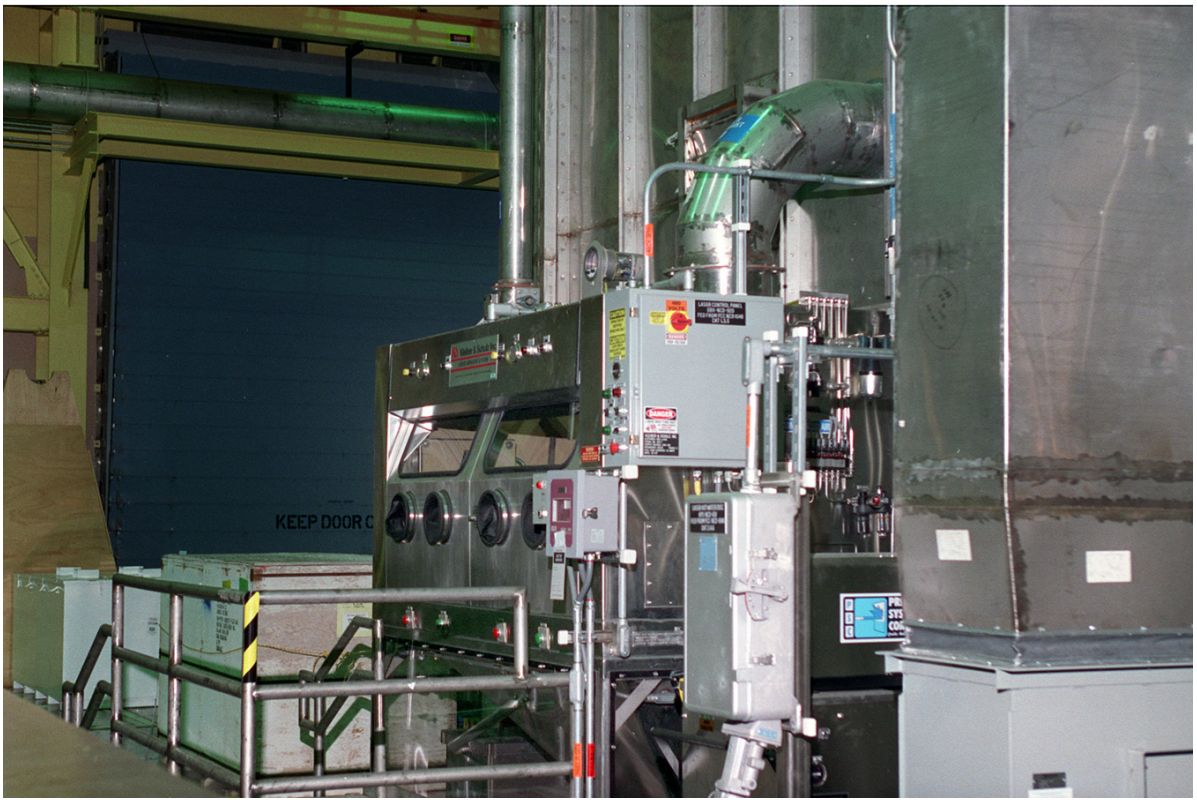

Glove Box
CPP-659 Room 418
Looking South West

PN-99-0082-1-8

Valve Cubicle
CPP-659
Looking West
PN-81-4767

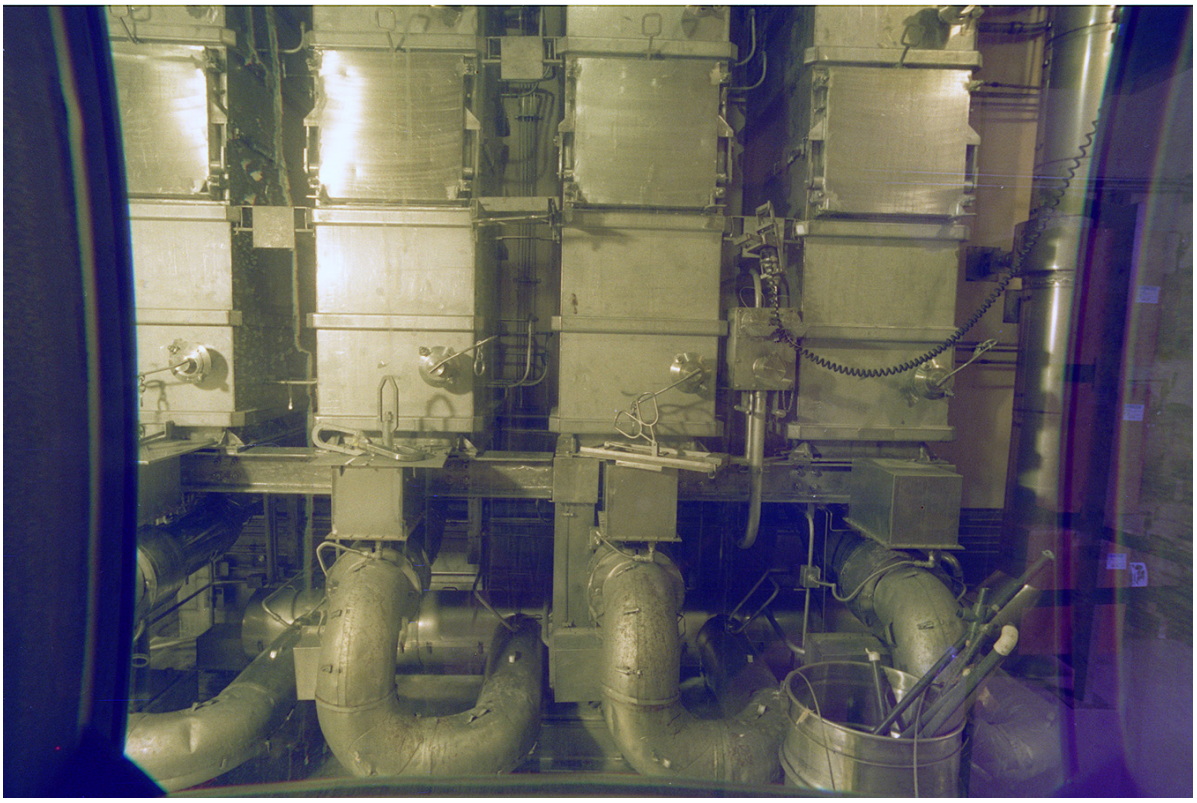

Filter Cell
CPP-659
Looking South

PN-96-98-1-19

CPP-659 Room 308 Overhead Crane and Room 323 Hatch Covers
Looking East

PN-81-4278

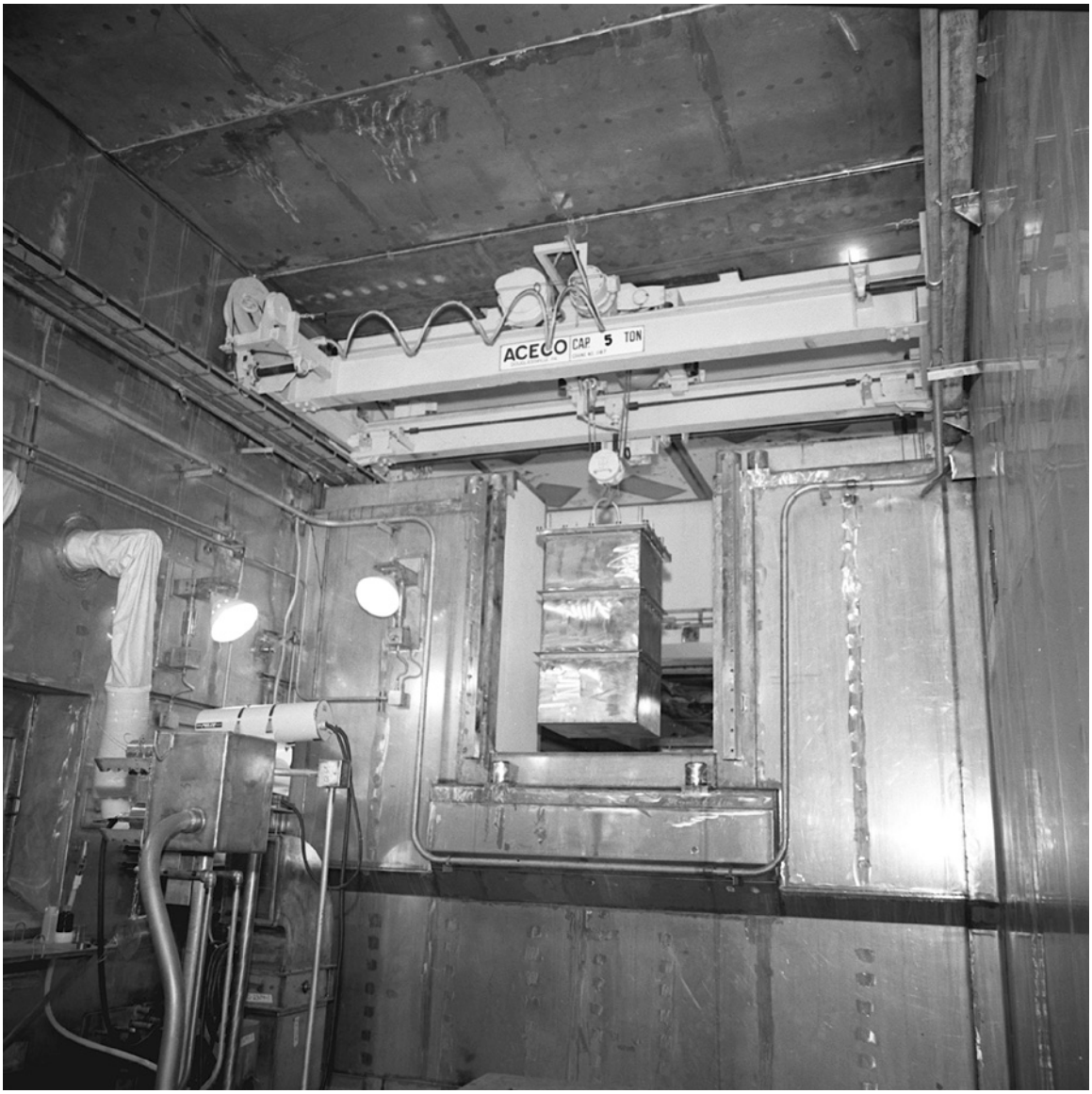

Looking at a transfer into CPP-659 Room 308
from the Crane Maintenance and Transfer Area Room 323

PN-82-5127

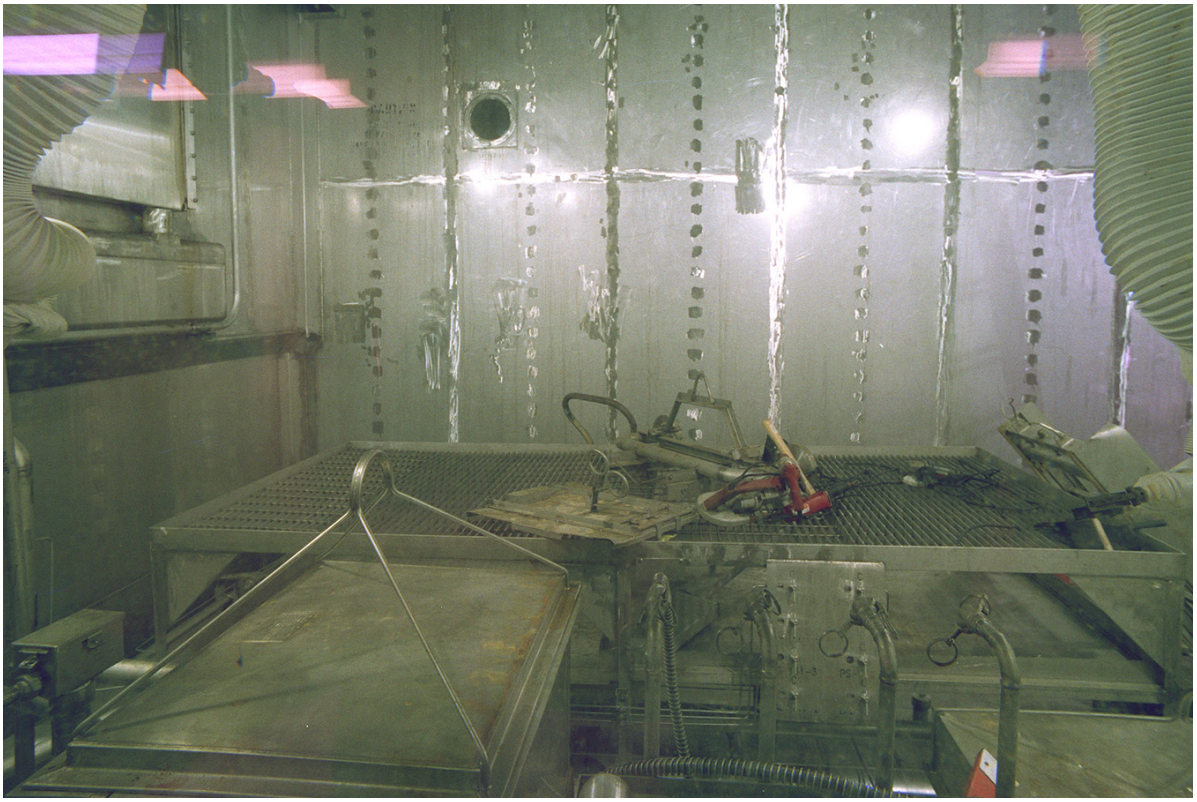

CPP-659 HEPA Filter Leaching System
Room 309
Looking South

PN-96-85-1-12

CPP-659 Room 308
Decontamination Cell
Looking West

PN-82-5131

CPP-666 FAST Building Exterior
Looking South East

PN-96-98-1-7

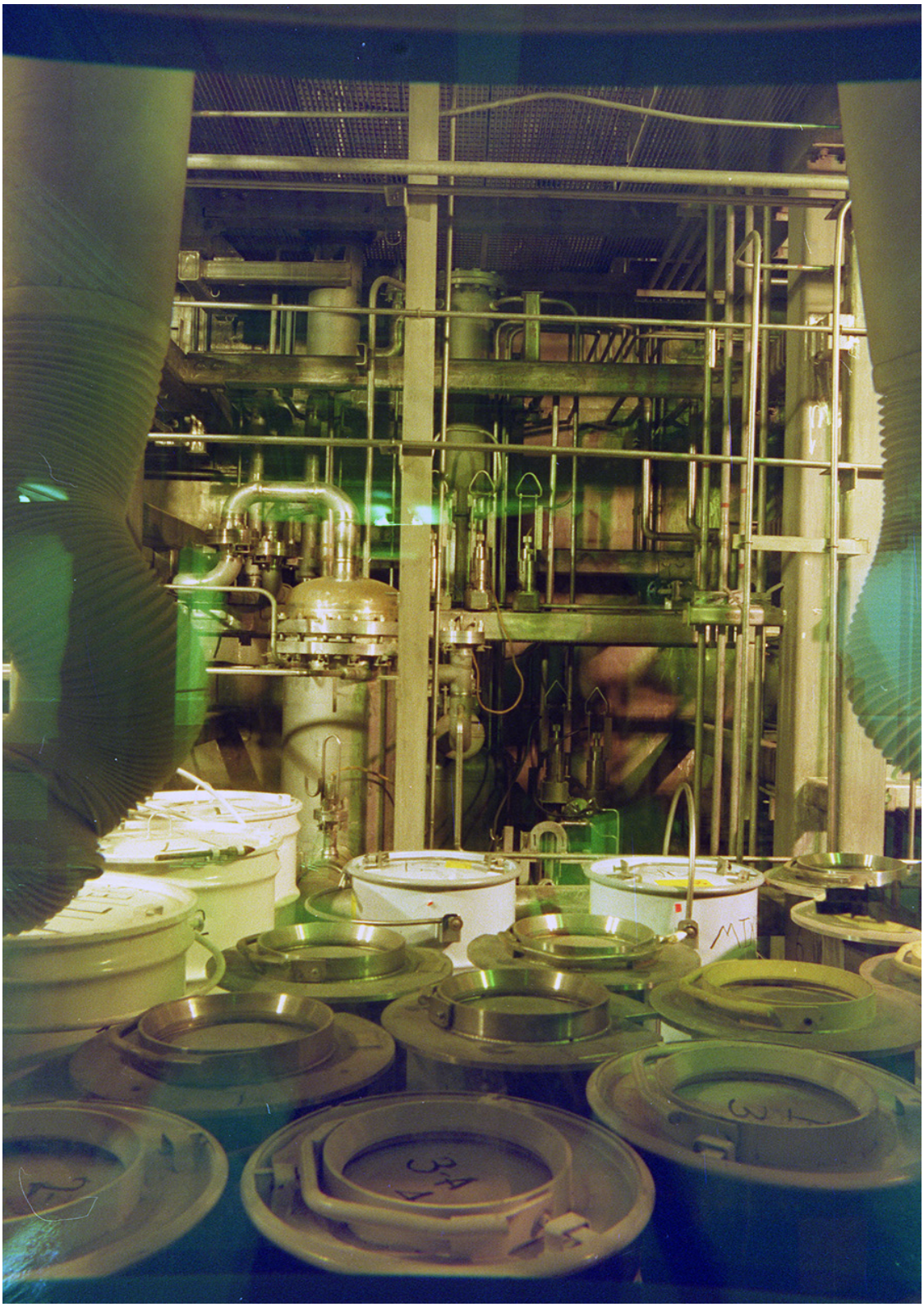

CPP-666 FDP Cell Container Storage
-13'-0' Level
Looking East

PN-96-84-1-9

03-06-02
RMWSF
Main Gate CPP-1617
Storage Area
Looking South

Photo number: 1617-16

03-06-02
RMWSF
Inside CPP-1617
Temporary Structure
Looking East

Photo Number: 1617-01

03-06-02
RMWSF
Mixed Waste Storage Boxes
Paved Area
Looking North East

Photo Number: 1617-11

9-29-98
RMWSF
High Radiation Storage Area with Radioactive and Mixed Waste Boxes (with covers)
Paved Area
Looking East

Photo Number: 98-546-2-2

03-03-02
RMWSF
Cargo Containers
Paved Area
Looking North

Photo Number: 1617-14

1989
RMWSF
CPP-1617 Exterior
Looking North East

Photo Number: 89-566-1-15

03-06-02
RMWSF
CPP-1617 Building
Looking North West

Photo Number: 1617-07

1995
RMWSF
Interior Cargo Container, Drip Pan, Inspector, and Liquid Waste
Electric Base Board Heater Lower Left
Looking West

Photo Number: 95-1015-1-8

03-06-02
RMWSF
Heated Cargo Containers
Paved Area
Looking South West

Photo Number: 1617-09

06-07-04
External View of an Interim Storage Container

Photo Number: ILSTF 003.jpg

06-07-04
View of Empty Interim Storage Container

Photo Number: ILTSF 001.jpg

09-23-04
Example of Shielded Overpack Container

Photo Number: ILTSF 005.jpg

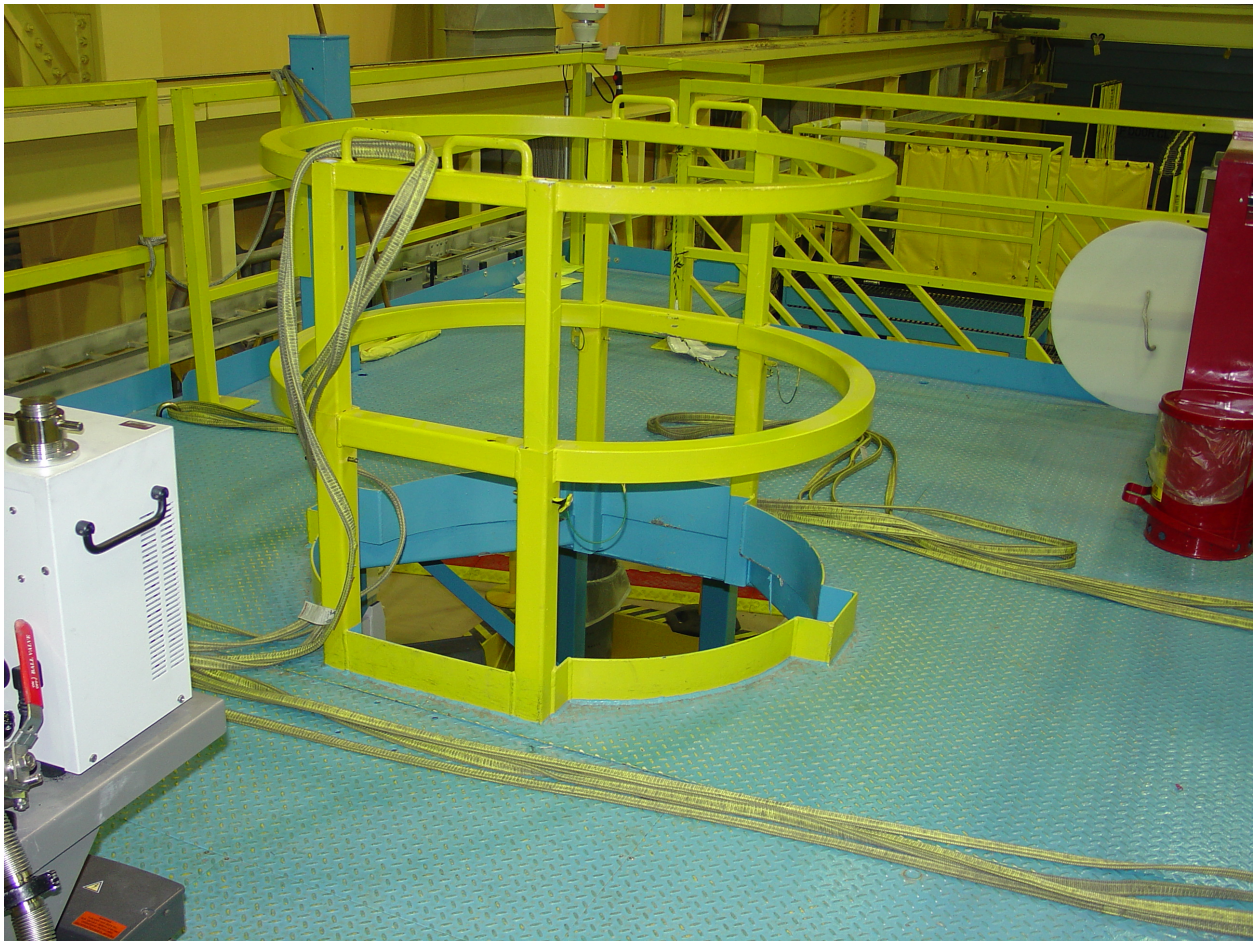

01-21-09
RH TRU Cask Loading Platform
CPP-659, Room 428

Photo Number: N/A

01-21-09
RH TRU Removable Lid Container (RLC) Inspection Stand (empty)
CPP-659, Room 428

Photo Number: N/A

01-21-09
RH TRU Cask Loading and RLC Inspection Areas
CPP-659, Room 428

Photo Number: N/A

01-21-09
RH TRU View of Overhead Crane
CPP-659, Room 428 Looking West

Photo Number: N/A

01-21-09
RH TRU RLC Inspection Station with Empty RLC
CPP-659, Room 428

Photo Number: N/A

01-21-09
RH TRU RLC with Lid Removed and Placed on Lid Inspection Stand
CPP-659, Room 428

Photo Number: N/A

01-21-09
RH TRU Personnel Operating Station
CPP-659, Room 428

Photo Number: N/A

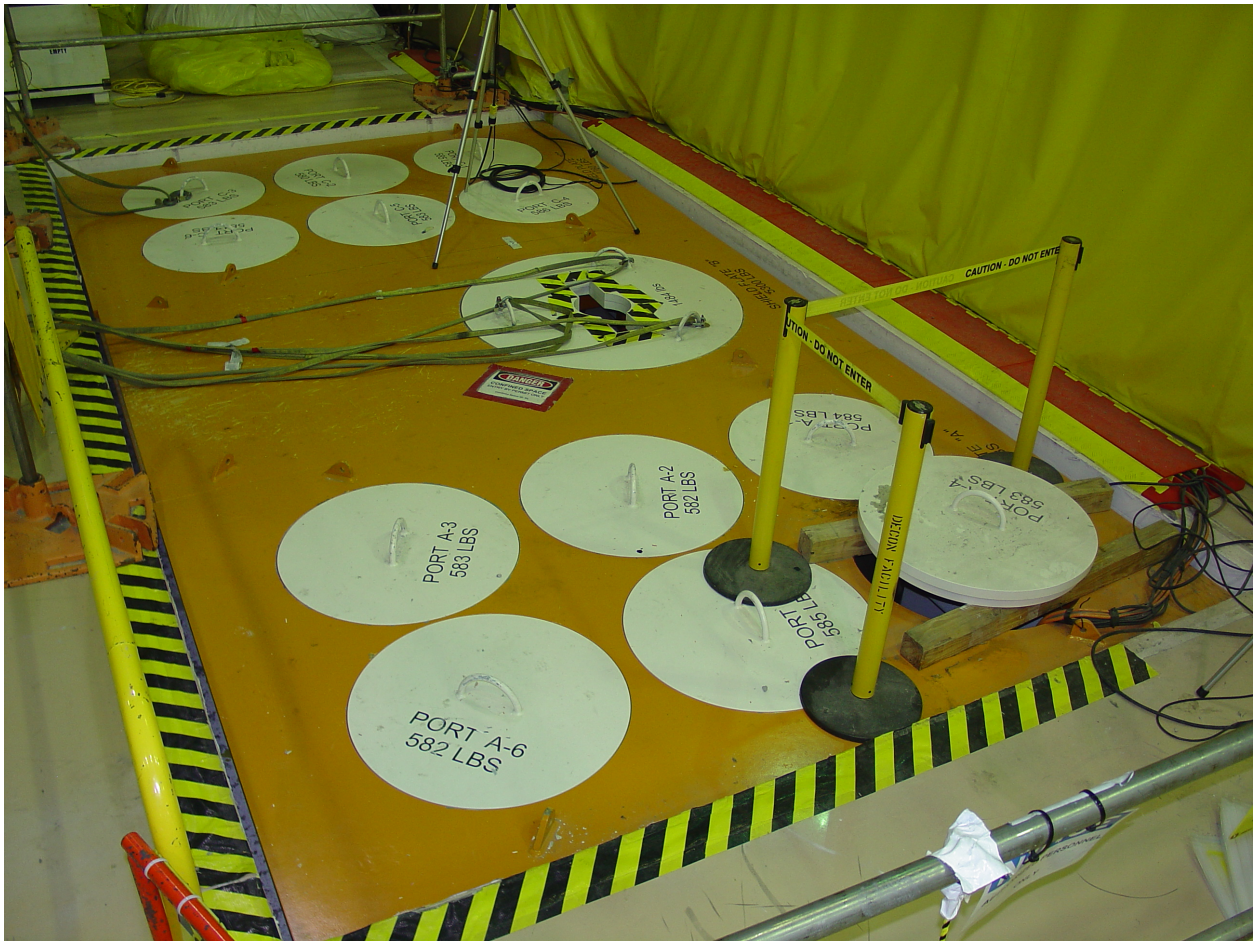

01-21-09
RH TRU Lag Storage Rack
CPP-659, Room 428

Photo Number: N/A

01-21-09
RH TRU Cask Storage Rack and Impact Limiter Staging Stand (both empty)
CPP-659, Room 428

Photo Number: N/A

01-21-09
RH TRU Funnel for Loading Inserts into Casks
CPP-659, Room 428

Photo Number: N/A

01-21-09
RH TRU Transport Trailer with 72B Shipping Cask
Located east of CPP-659

Photo Number: N/A

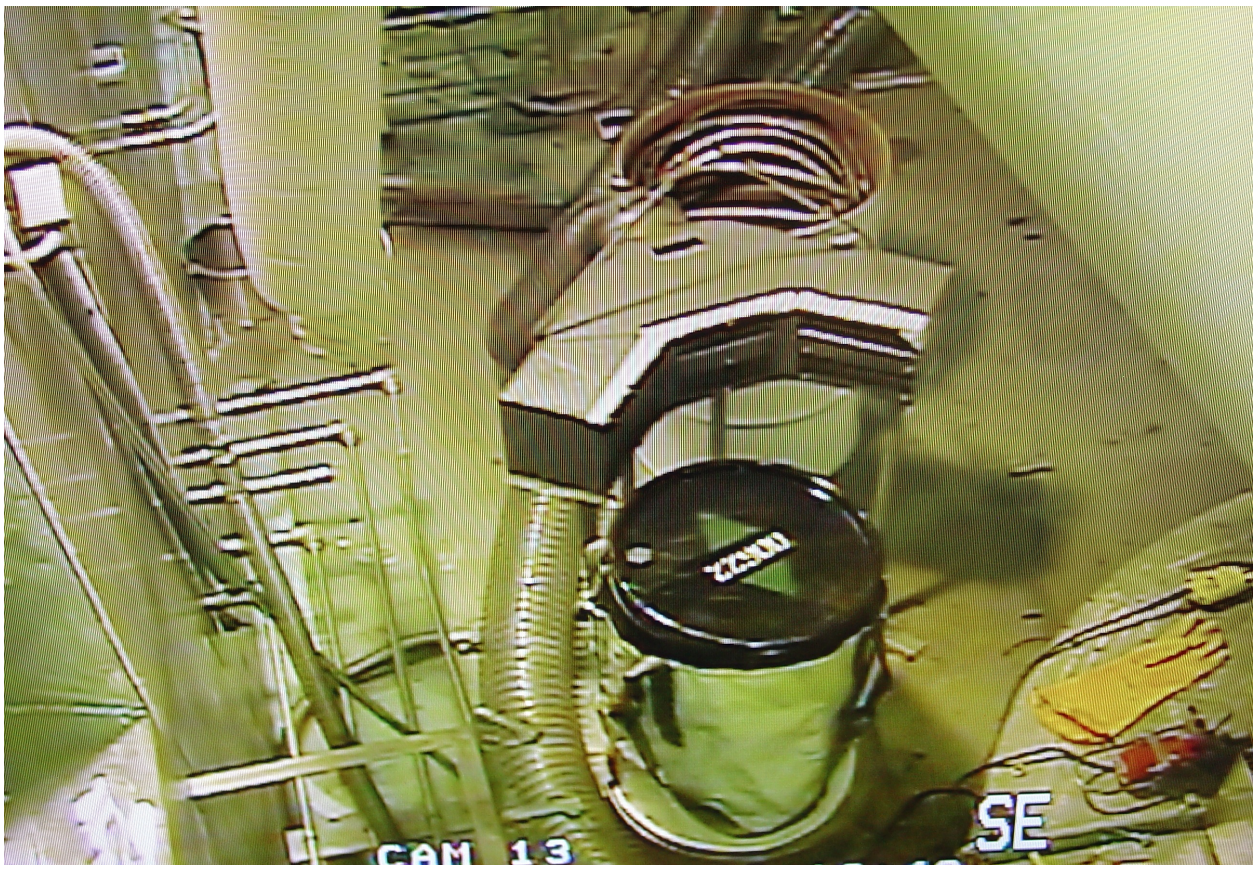

01-21-09
RH TRU Decon Cell with Repackaged Drum
CPP-659, Room 208

Photo Number: N/A

01-21-09
RH TRU Decon Cell with Turntable/Sorting Table with Downdraft Repackage Waste Container
CPP-659, Room 208

Photo Number: N/A

01-21-09
RH TRU Crane Maintenance and Transfer Area
CPP-659, Room 323

Photo Number: N/A

01-21-09
RH TRU Real-Time Radiography (RTR) Access Port into Room 306
CPP-659, Room 418

Photo Number: N/A

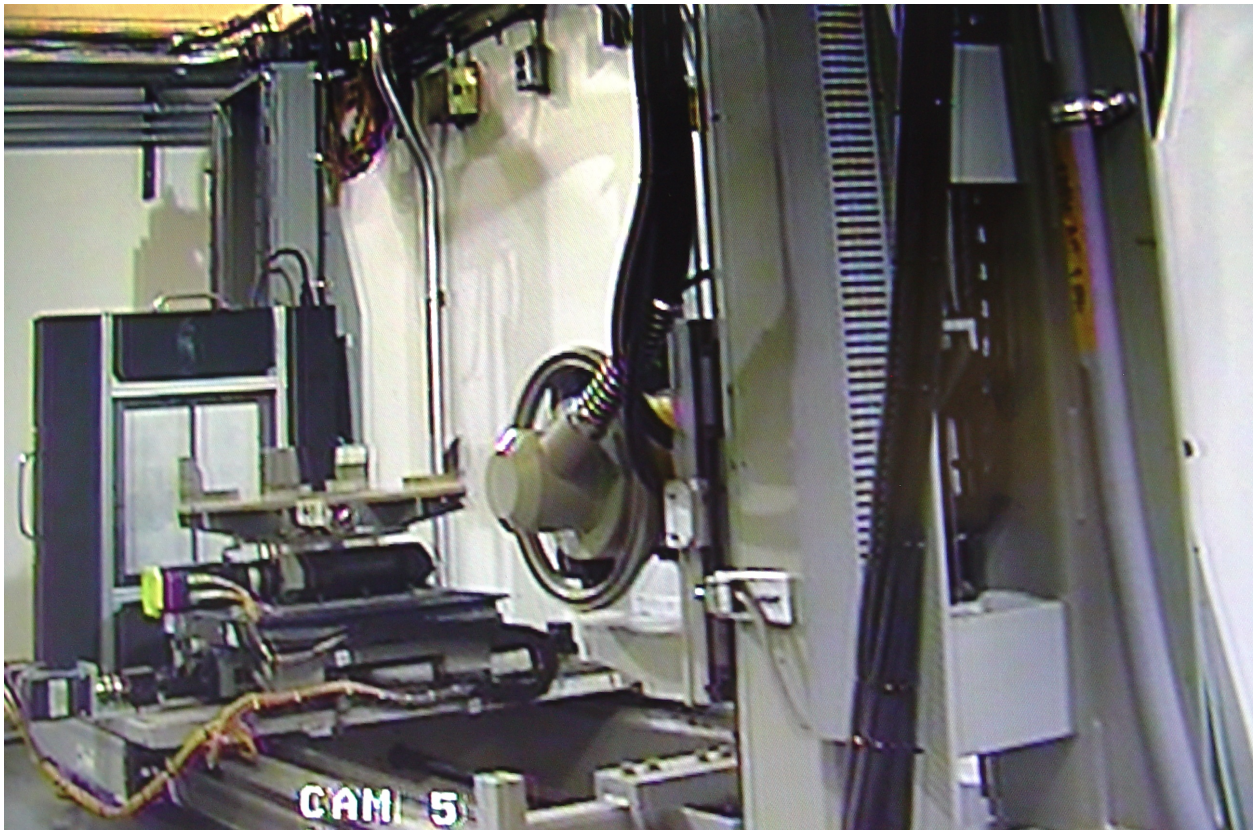

01-21-09
RH TRU RTR Equipment
CPP-659, Room 306

Photo Number: N/A

01-21-09
RH TRU Decontamination Access Tent into Remote Decon Cell (Room 308)
CPP-659, Room 418

Photo Number: N/A

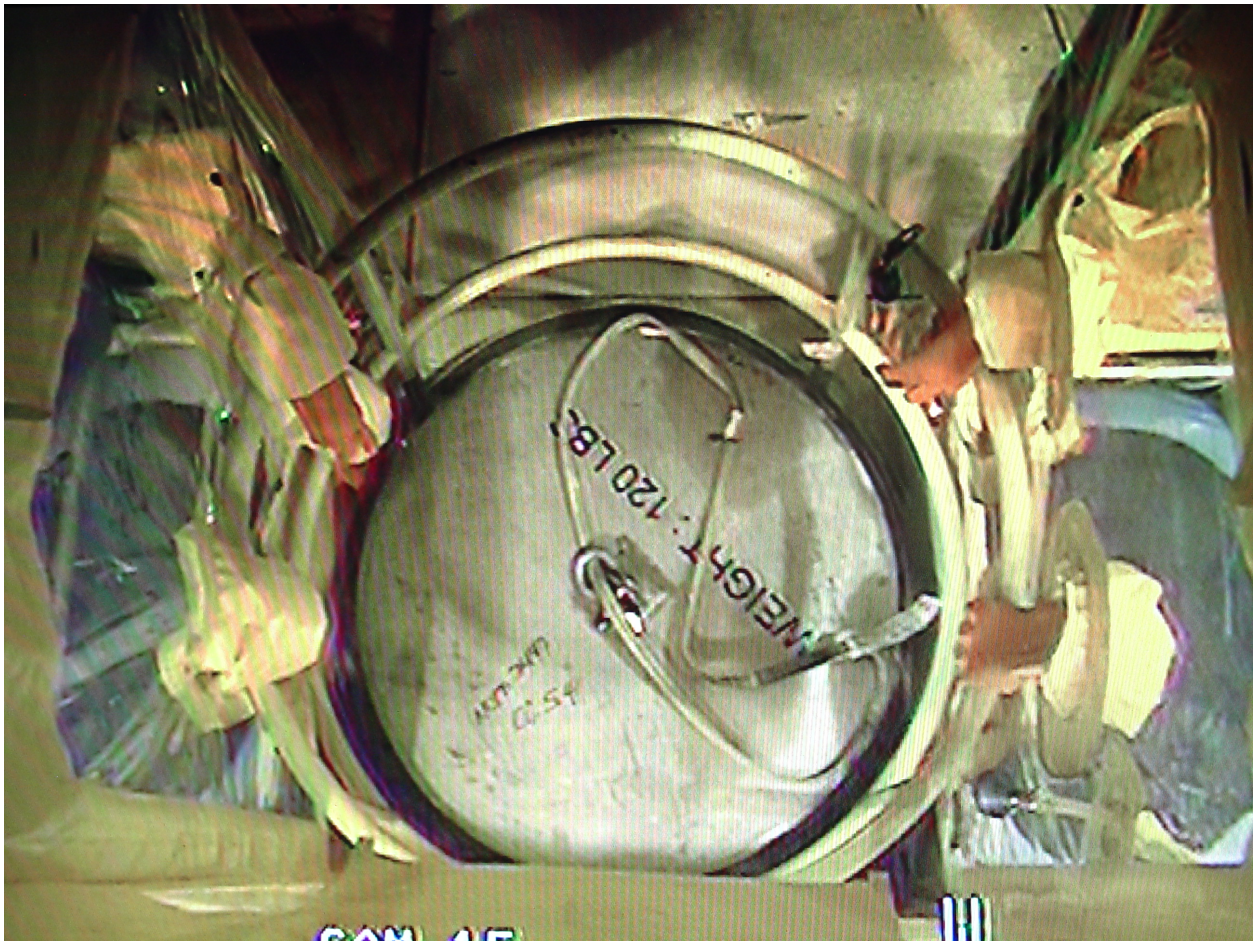

01-21-09
RH TRU Port Cover over Remote Decon Cell (Room 308) located in Decontamination Access Tent
CPP-659, Room 418

Photo Number: N/A

01-21-09
RH TRU Shielded Operating Area in the Equipment Decon Room
CPP-659, Room 418

Photo Number: N/A

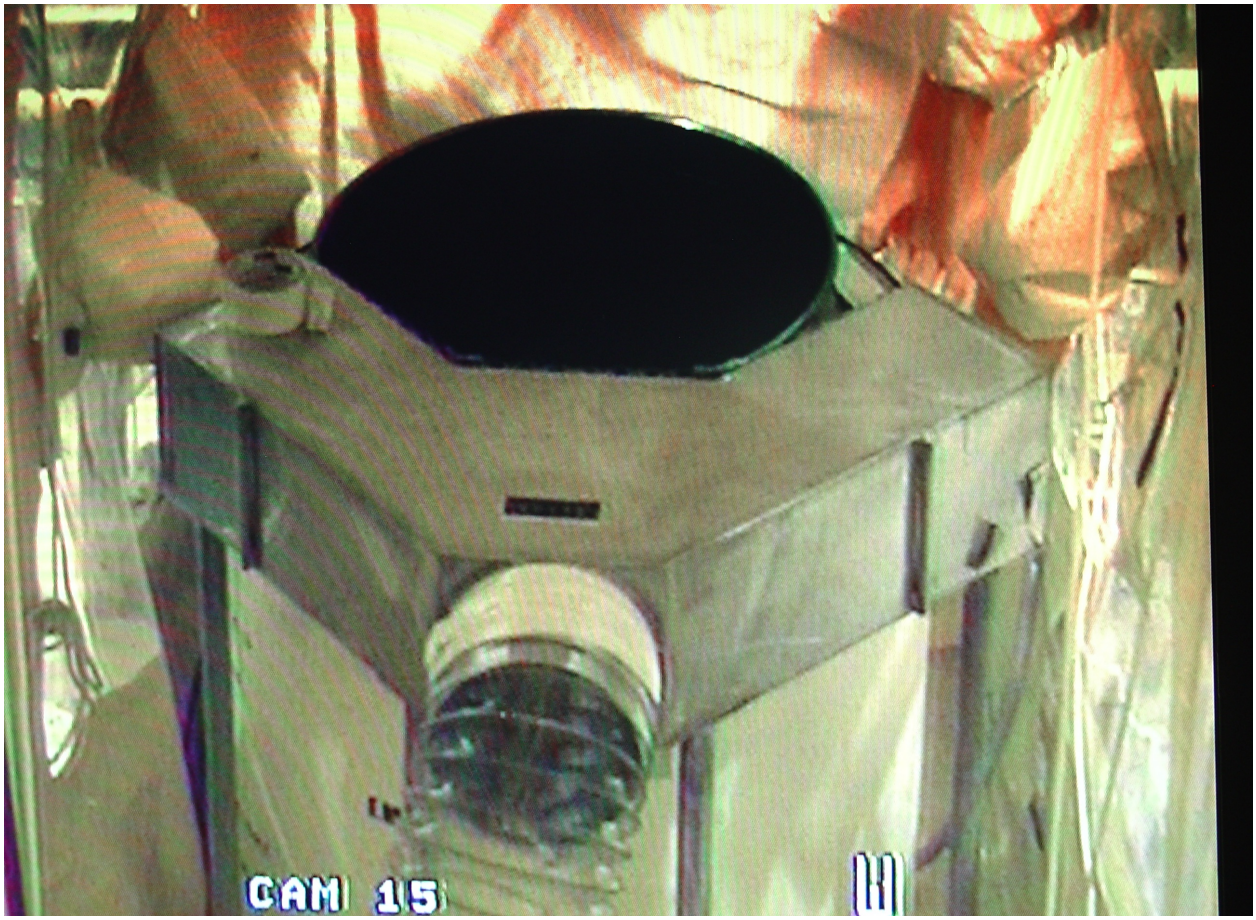

01-21-09
RH TRU Equipment Decon Room (418) Overpack Area -55-gallon Waste Drum
CPP-659, Room 418

Photo Number: N/A

04-09-2015
Argon Repackaging Station (ARS) unit for use in CPP-659 Room 308

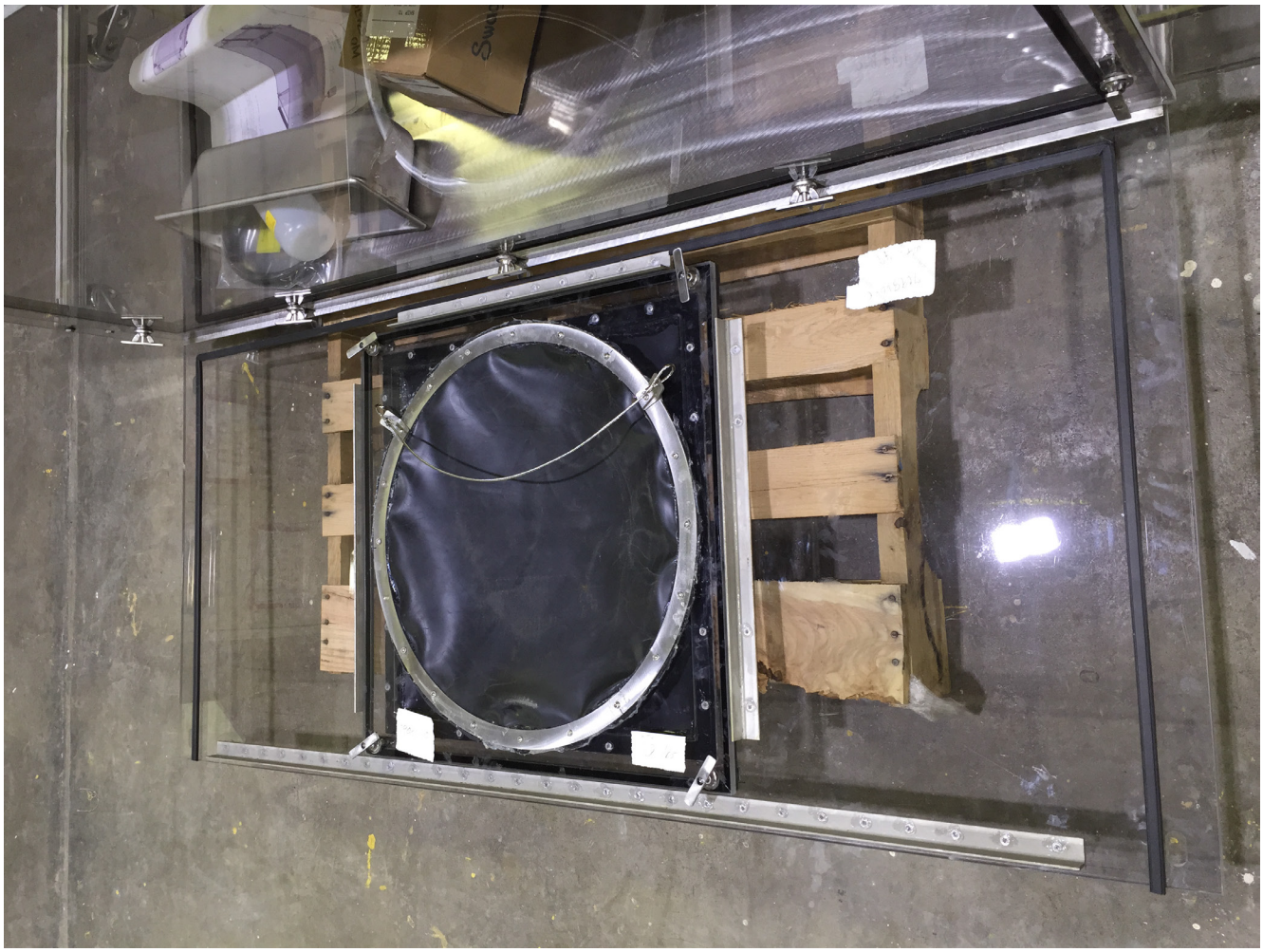

04-09-2015
ARS unit showing a lexan wall with a drum out port. The wall is replaceable with either a wall with a drum out port or a solid wall.
The ARS unit will be installed in CPP-659, Room 308

ARS 1 Unit Prior to installation into the CPP-666 FDP Cell

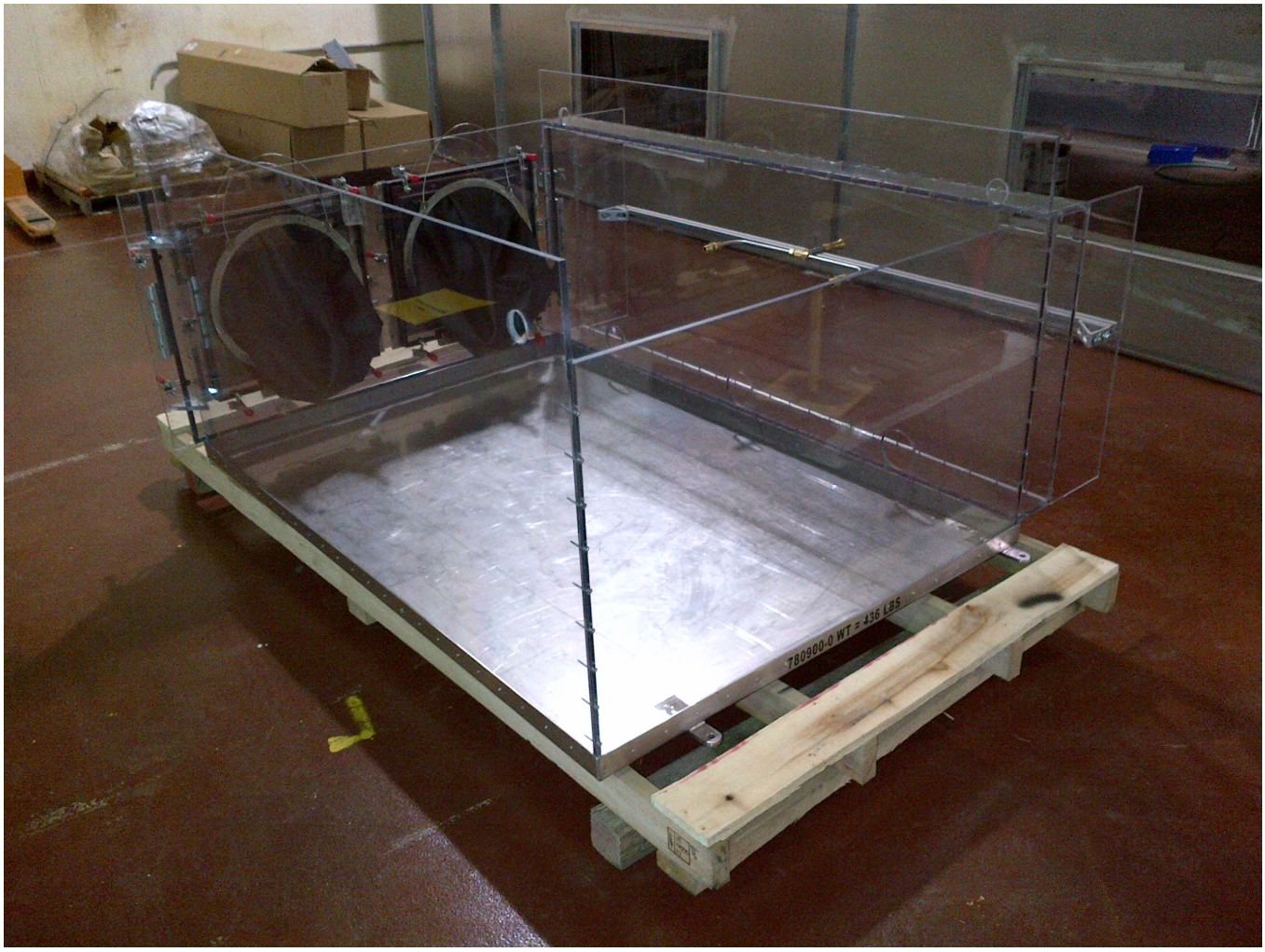

ARS 2 unit prior to installation into the CPP-666 FDP Cell

ARS 2 setup with empty waste containers prior to installation into the CPP-666 FDP Cell

HWMA/RCRA PART B PERMIT

FOR THE IDAHO NATIONAL LABORATORY

Volume 18 – Idaho Nuclear Technology and Engineering Center

APPENDIX 2

Debris Treatment Processes
Holdup and Collection Tanks
CPP-659/-1659 Storage
CPP-666 FDP Cell Container Storage and Slab Tank Storage
Other Miscellaneous Treatment Processes
RMWSF (CPP-1617) Container Storage Area

FACILITY DRAWINGS

Revision Date: February 12, 2016

DRAWING LIST

Drawing Number	Revision Number	Description
056381	22	CPP Piping & Instrument Legend, Symbols & Abbreviations
142644	3	Fluorinel and Storage Facility Mechanical Process Legend & Symbols
132378	2	3rd Level Floor Slab Plan No. 3 Calcining Area
132464	6	1st Level Floor & FDN Plan Decontamination Area
132545	1	Decon. Coll.Tank & Pump Cells Wall Sections Calcining Area
132797	1	Item No. VES-NCD-123 Decontamination Area Hold-Up Tk. Decon Area
132799	1	Item No. VES-NCD-129 Collection Tank Decon Area
133399	12	Utility Flow Diagram Process & Utility Drain Line @ Levels No, 1, 2, & 3, NWCF
133400	9	Utility Flow Diagram Process & Utility Drain Lines @ Levels No 1, 2, 3, NWCF
133401	12	Utility Flow Diagram Process & Utility Drain Lines @ Levels No 1, 2, 3, NWCF
133402	11	Utility Flow Diagram Process & Utility Drain Lines @ Levels No 1, 2, 3, NWCF
133408	28	Mechanical P&ID Hot Sump Tanks Cell, NWCF
133409	31	Mechanical P&ID Hot Sump Tanks Cell, NWCF
133443	23	Mechanical Flow Diagram Decontamination Area, NWCF
133444	20	Mechanical Flow Diagram Decontamination Area, NWCF
133445	23	Mechanical Flow Diagram Decontamination Area, NWCF
133446	23	Mechanical Flow Diagram Decontamination Area, NWCF
133447	27	Mechanical Flow Diagram Decontamination Area, NWCF
133448	27	Mechanical Flow Diagram Decontamination Area, NWCF
134621	2	Stainless Steel Floor Liner Plate Installation Floor Plan No. 3 Decon Area, NWCF

Drawing Number	Revision Number	Description
444389	7 Sheet P-3	HEPA Filter Leach System Process and Instrumentation Diagram
444390	3 Sheet P-4	Modifications to HEPA Filter Leach System Piping Plan
097870	3	CPP-659 NWCF Truck Bay Decon Spray Booth DSB-NC-601 P&ID
097877	2 Sheets 1 - 2 of 2	CPP-659 NWCF Truck Bay Decon Spray Booth and Glovebox DSB-NC-601 and GBX NCD-920 Configuration
097878	2	ICPP BLDG 659 NWCF Truck Bay Liquid Abrasive Spray Glove Box GBX-NCD-920 Component Arrangement
184190	5 Sheet V-1	ICPP BLDG 659 Spray Booth DSB-NC-601 and HVAC Air Flow and Control Diagram
184193	2 Sheet V-4	ICPP BLDG 659 Decon Spray Booth DSB-NC-601 1st Level HVAC Plan View
384861	2	Debris Rule Compliance Project Steam Spray Booth Floor Plan, Sect. & Details
384870	8	DSB-NC-601 & GBX-NCD-920 Process Trench and Drain Flow Diagram
141706	6	Fluorinel and Storage Facility Architectural Enlarged Partial Plan EL -13'-0 -27'-0" -31-0"
092723	1	CPP-659 Room # 415 Contamination Control Barrier Plan View
142404	4	Fluorinel and Storage Facility Mechanical Hatch Cover Waste Transfer Room
142423	3	Fluorinel and Storage Facility Mechanical Waste Transfer Shielded Box
143388	7	Fluorinel and Storage Facility Structural Dissolution Cell Wall Elevations and Sections Sht 1
143409	9	Fluorinel and Storage Facility Structural Dissolution Cell Sections Sht 2
143434	8	Fluorinel and Storage Facility Structural Dissolution Cell Sections Sht 3
143493	5	Fluorinel and Storage Facility Structural Typical Liner Plate Plan, Elevation, Section & Details

Drawing Number	Revision Number	Description
149885	2	FDP Cell Grating Modifications Steel Framing Plan @ EL -0'-2
149886	2	FDP Cell Grating Modifications Grating Plan @ EL -0'-0
141703	9	Fluorinel and Storage Facility Architectural Floor Plan EL 0'-0"
092443	4	CPP-666 Space Occupancy First Floor Plan
350205	1	Slab Tank VES-FC-184 Modify Cell Sump System
092700	7	CPP-666 Fluorinel Dissolution Process FM Area Noncontaminated Aqueous Waste Collection & Disposal P&ID
058061	20 Sheet 3	CPP-666 Fluorinel Dissolution Process Cell P & ID
142524	2	Fluorinel and Storage Facility Mechanical Remote Handling Air Filtration Cell Plywood Box
630299	1 Sheets 1 – 3 of 3	CPP-659 Remote Waste Box Bail Assembly CONT-NCM-16
625880	3	RWMC Remote Handling for TRU Waste Interim Storage System Interim Storage Container Assembly and Details
625881	2	RWMC Remote Handling for TRU Waste Interim Storage System Interim Storage Container Sections and Details
625882	3	RWMC Remote Handling for TRU Waste Interim Storage System Interim Storage Container Lid Assembly and Details
625883	1	RWMC Remote Handling for TRU Waste Interim Storage System Interim Storage Container Insert Assembly and Details
513174	4	Storage and Characterization Overpack for RH-TRU Waste Final Assembly
511342	4 Sheet 1 of 3	30 Gallon Storage and Characterization Overpack for RH-TRU Waste
455184	3 Sheets 1 – 4 of 4	Storage and Characterization Overpack for RH-TRU Waste (Bolted Base Construction)
133413	25	CPP-659 Mechanical Flow Diagram Blend & Hold Cell & Valve Cubicle New Waste Calcining Facility

Drawing Number	Revision Number	Description
635083	2 Sheet P-3	INTEC IWTU Modifications to NWCF Valve Cubicle P&ID
571621	1 Sheet P-1	CPP-666 RH TRU Distillation System Instrumentation Legend
571622	3 Sheet P-2	CPP-666 RH-TRU Distillation System Instrumentation Legend
571700	2 Sheets 1-6 of 6	CPP-666 RH-TRU Distillation Project Distillation Vessel Assembly VES-FC-101
571699	4 Sheets 1-4 of 4	CPP-666 RH-TRU Distillation System Collection Vessel Assembly VES-FC-85
571693	2 Sheets 1-2 of 2	CPP-666 RH-TRU Distillation System Spool Piece 1
571694	2 Sheets 1-2 of 2	CPP-666 RH-TRU Distillation System Spool Piece 2
571695	2 Sheets 1-4 of 4	CPP-666 RH-TRU Distillation System Spool Piece 3
571701	3 Sheets 1-2 of 2	CPP-666 RH-TRU Distillation System Spool Piece 5
571697	2 Sheets 1-2 of 2	INTEC-666 RH-TRU Distillation System Condenser Support Assembly
571718	2 Sheets 1-3 of 3	INTEC CPP-666 RH-TRU Distillation System DNI Room Secondary Containment Pan Assembly
571518	1	INTEC CPP-666 RH-TRU Distillation System DNI Room Secondary Containment Threshold
571623	4 Sheet P-7	INTEC-666 RH-TRU Sodium Distillation System Installation Thermal Fluid Skid P&ID
790816	1	INTEC CPP-659 Argon Repackaging Station ARS-3. ARS-3 Configurations

Drawing Number	Revision Number	Description
571515	2 Sheets 1-5 of 5	CPP-666 RH-TRU SODIUM DISTILLATION SYSTEM DISTILLATION ASSEMBLY MODIFICATION
571517	1	CPP-666 RH-TRU SODIUM DISTILLATION SYSTEM SPOOL PIECE 4 MODIFICATION
571505	1 Sheet PF-1	CPP-666 RH-TRU SODIUM DISTILLATION SYSTEM CONDENSER/COLLECTION VESSEL PROCESS FLOW DIAGRAM
571501	2 Sheet P-1	CPP-666 RH-TRU SODIUM DISTILLATION SYSTEM CONDENSER/COLLECTION VESSEL DISTILLATION VESSEL AND CONDENSER PIPING AND INSTRUMENTATION DIAGRAM
571502	1 Sheet P-2	CPP-666 RH-TRU SODIUM DISTILLATION SYSTEM CONDENSER/COLLECTION VESSEL TRANSFER VESSEL AND COLLECTION VESSEL PIPING AND INSTRUMENTATION DIAGRAM
571503	2 Sheet P-3	CPP-666 RH-TRU SODIUM DISTILLATION SYSTEM CONDENSER/COLLECTION VESSEL FILTER AND VACUUM PUMP PIPING AND INSTRUMENTATION DIAGRAM
786868	1 Sheets 1-5 of 5	CPP-666 RH-TRU DISTILLATION SYSTEM CONDENSER / COLLECTION VESSEL ASSEMBLY COND-FC-103A / VES-FC-85A
786869	1 Sheets 1-4 of 4	CPP-666 RH-TRU DISTILLATION SYSTEM CONDENSER / COLLECTION VESSEL ASSEMBLY INNER ASSEMBLY COND-FC-103A/VES-FC-85A
786870	1 Sheets 1-3 of 3	CPP-666 RH-TRU DISTILLATION SYSTEM CONDENSER / COLLECTION VESSEL OUTER SHELL ASSEMBLY
786871	0 Sheets 1-2 of 2	CPP-666 RH-TRU DISTILLATION SYSTEM COLLECTION TANK ASSEMBLY VES-FC-85A
785276	1 Sheets 1-3 of 3	CPP-666 RH-TRU DISTILLATION SYSTEM COLD TRAP FILTER ASSEMBLY F-FC-221
788579	2	CPP-666 RH-TRU DISTILLATION SYSTEM SPOOL PIECE 6
792396	1	INTEC CPP-666 ARGON REPACKAGING STATIONS 1.0 AND 2.0

VALVES, MANUALLY OPERATED

BY ADDING AN ACTUATOR TO THE BASIC VALVE SYMBOL, VALVE BECOMES A CONTROL VALVE.

- ANGLE GATE
- ANGLE GLOBE
- BALL
- BLOW DOWN
- BUTTERFLY
- CHECK
- CHECK ANGLE
- CHECK ANGLE STOP
- CHECK STOP
- COCK
- DIAPHRAGM
- FOUR WAY
- GATE
- GLOBE
- GLOBE WITH BELLOWS SEAL
- HOSE ANGLE GATE
- HOSE GATE
- HOSE ANGLE GLOBE
- HOSE GLOBE
- MANIPULATOR OPERATED
- NEEDLE
- PINCH
- PLUG
- QUICK RELEASE
- RELIEF
- SLIDE
- THREE WAY
- SAFETY
- VENT — BLEED VALVE OR PURGE VALVE

VALVE ACTUATORS

VALVES SHOWN IN PHANTOM ARE FOR REFERENCE ONLY. SUBSTITUTE APPROPRIATE SYMBOLS AS REQUIRED.

- CYLINDER OPERATED
- CYLINDER OPERATED SINGLE ACTING AIR TO OPEN
- CYLINDER OPERATED SINGLE ACTING AIR TO CLOSE
- CYLINDER OPERATED DOUBLE ACTING
- CYLINDER OPERATED RAM
- DIAPHRAGM OPERATED
- FLOAT OPERATED
- EXTENSION
- MOTOR OPERATION
- REGULATOR – PRESSURE REDUCING WITH INTEGRAL RELIEF & OUTPUT PRESSURE INDICATOR
- PRESSURE REGULATOR INTEGRAL RELIEF
- REGULATOR – BACK PRESSURE
- REGULATOR – EXTERNAL PRESSURE TAP
- REGULATOR – PRESSURE REDUCING
- REGULATOR – PRESSURE REDUCING WITH INTERNAL PRESSURE TAPS
- REGULATOR – PRESSURE REDUCING WITH INTERNAL PRESSURE TAPS AND IN AND OUT PRESSURE GAUGES
- SOLENOID OPERATED
- CHAIN OPERATED
- SOLENOID OPERATED WITH RESET
- DIAPHRAGM OPERATED WITH HANDWHEEL
- DIAPHRAGM OPERATED WITH POSITIONER

VALVE STATUS

VALVES SHOWN IN PHANTOM ARE FOR REFERENCE ONLY. SUBSTITUTE APPROPIATE SYMBOLS AS REQUIRED.

- LC — LOCKED CLOSED
- LO — LOCKED OPEN
- NC — NORMALLY CLOSED
- NO — NORMALLY OPEN
- POST INDICATOR
- FO — FAIL OPEN
- FC — FAIL CLOSED

LINE SYMBOLS

- PRIMARY
- SECONDARY
- PNUEMATIC SIGNAL
- CAPILLARY
- ELECTRICAL
- FLEX HOSE
- RCRA CONTROLLED

JOINT TYPES

VALVES SHOWN IN PHANTOM ARE FOR REFERENCE ONLY. SUBSTITUTE APPROPRIATE SYMBOLS AS REQUIRED.

- SCREWED
- FLANGED
- BUTT WELD
- SOLDERED
- SOCKET WELD
- TUBING FITTING
- TUBING UNION
- TUBING TEE

ABBREVIATIONS

ABBREVIATIONS COMMONLY USED ON CPP DRAWINGS BUT NOT IN G.E. DRAFTING MANUAL

OTA------OPEN TO ATMOSPHERE

MISCELLANEOUS

- AIRLIFT
- FILTER
- JET
- LINE BLIND FLANGE
- SPECTACLE BLIND (INSTALL DONUT)
- BLIND FLANGE
- QUICK DISCONNECT COUPLING
- STRAINER
- STRAINER (Y-TYPE)
- STRAINER (DUAL)
- PUMP (CENTRIFUGAL)
- PUMP (DIAPHRAGM)
- STEAM TRAP
- REDUCER
- PIPE PLUG
- SOCKET WELD CAPPED LINE OR THREADED CAPPED LINE
- BUTT WELD CAPPED LINE
- HOSE CONNECTION
- SPRAY NOZZLE
- FREEZE PLUG
- VENTURI TUBE
- DIAPHRAGM SEAL
- CONTINUATION ZONE BOX (CONTINUATION DRAWING NUMBER; ZONE LETTER; ZONE NUMBER)
- FLOOR DRAIN
- CAPPED FLOOR DRAIN
- CAPPED FLOOR DRAIN WITH PENETRATION
- SPARGE

MISCELLANEOUS (CONT.)

- TIE POINT (.56; TP; 3)
- DISTANCE FROM WALL TO TIE POINT
- CONSECUTIVE NUMBERS
- NEW TO EXISTING
- VACUUM BREAKER
- VALVE DRIP PAN
- HEAT EXCHANGER
- EYE WASH
- SAFETY SHOWER
- AIR OPERATED FLOOR DRAIN PLUG VALVE
- LOCKOUT CAN
- SURGE POT

INSTRUMENTATION

FOR INSTRUMENTATION SYMBOLS SEE DRAWING 058560

NO.	REVISIONS	DRAFTER DATE	CHECKER DATE	OPTE SUPV DATE	SYS. ENGR DATE
22	PER DCN #171556-AB8	BUBBA 2-5-97	DJG 2-26-97		GAJ 2/26/97
21	REVISED PER DCN #155754-AB38	WILMORE 06-24-94	GS 06-28-94	DBJ 06-28-94	JW 06-28-94

CONTROLLED DOCUMENT CLASS I

APPROVALS	SIGNATURE	DATE
ENGR.		
OPTNS.		
CHECKER		
REQUESTER		
D.SUPV.		

SCALE

DATE ISSUED

Westinghouse Idaho Nuclear Company Inc.
IDAHO CHEMICAL PROCESSING PLANT
IDAHO FALLS, IDAHO

FOR
U.S. DEPARTMENT OF ENERGY
IDAHO OPERATIONS OFFICE
IDAHO FALLS, IDAHO

CPP PIPING & INSTRUMENT LEGEND, SYMBOLS & ABBREVIATIONS

COM

DWG. SIZE	INDEX CODE NUMBER: AREA	DWG TYPE	CL	ORIG.	DRAWING NUMBER	REV.
D	200	9999	24	030	056381	22

JOB NUMBER

CAD GENERATED – AUTOCAD 2.5

IDENTIFICATION LETTERS

	FIRST LETTER		SUCCEEDING LETTERS (3)			
	MEASURED OR INDICATING VARIABLE	MODIFIER	READOUT OR PASSIVE FUNCTION	OUTPUT FUNCTION	FIRST MODIFIER	SECOND MODIFIER
A	ANALYSIS		ALARM		ALARM	
B	BURNER FLAME		USER'S CHOICE	USER'S CHOICE	USER'S CHOICE	
C	CONDUCTIVITY OR CORROSION			CONTROL	CLOSED	
D	DENSITY (MASS) OR SPECIFIC GRAVITY	DIFFERENTIAL				
E	VOLTAGE		PRIMARY ELEMENT			
F	FLOW RATE	RATIO (FRACTION)				
G	GAGING (DIMENSIONAL)		GLASS			
H	HAND (MANUALLY INITIATED)				HIGH	HIGH
I	CURRENT (ELECTRICAL)		INDICATE			
J	POWER	SCAN				
K	TIME OR TIME-SCHEDULE			CONTROL STATION		
L	LEVEL		LIGHT (PILOT)		LOW	LOW
M	MOISTURE OR HUMIDITY				MIDDLE OR INTERMEDIATE	
N	USER'S CHOICE		USER'S CHOICE	USER'S CHOICE	USER'S CHOICE	
O	CONTROLLED		ORIFICE (RESTRICTION)		OPEN	
P	PRESSURE OR VACUUM		POINT (TEST CONNECTION)			
Q	QUANTITY OR EVENT	INTEGRATE OR TOTALIZE				
R	RADIOACTIVITY		RECORD OR PRINT			
S	SPEED OR FREQUENCY	SAFETY		SWITCH		
T	TEMPERATURE			TRANSMIT		
U	MULTIVARIABLE		MULTIFUNCTION	MULTIFUNCTION	MULTIFUNCTION	
V	VISCOSITY			VALVE, DAMPER OR LOUVER		
W	WEIGHT OR FORCE		WELL			
X	VIBRATION		UNCLASSIFIED	UNCLASSIFIED	UNCLASSIFIED	
Y	USER'S CHOICE			RELAY OR COMPUTE		
Z	POSITION			DRIVE, ACTUATE (FINAL CONTROL ELEMENT)		

INSTRUMENT IDENTIFICATION

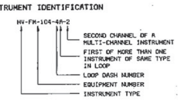

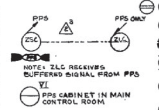

INSTRUMENT SYMBOLS

PER ISA STANDARD S 5.1 - 1973

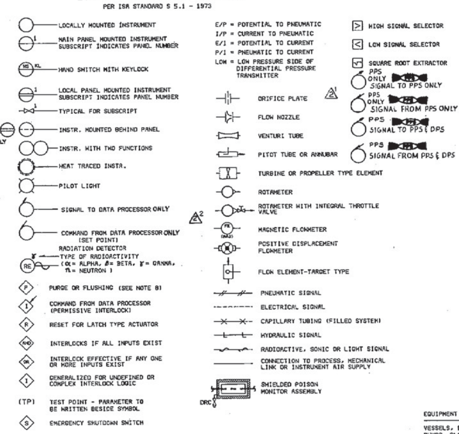

VALVE ACTUATOR SYMBOLS

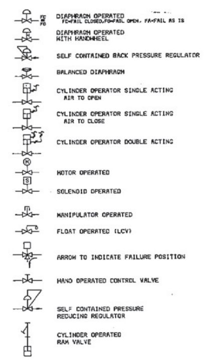

GENERAL NOTES:

1) VENTS, DRAINS AND HYDROTEST CONNECTIONS TO BE SHOWN ON P & ID'S ONLY FOR EQUIPMENT WITHIN FUEL PROCESSING CELLS.

2) LAST FOUR DIGITS OF LINE NUMBER SHOWN. FOR BUILDING 666, ALL LINES SHALL BE PREFIXED WITH NUMBER 12. (3)

3) SEE PIPING SPECIFICATION FOR MATERIAL CLASSES.

4) NOTES ON DRAWINGS:
   1. REFERS TO INFORMATION THAT IS GENERAL IN NATURE FOR THAT PARTICULAR DRAWING.
   [1] REFERS TO INFORMATION THAT IS UNIQUE TO A SPECIFIC POINT ON THAT DRAWING.

5) A. THE FOLLOWING LINES MUST NOT BE POCKETED:
   PROCESS
   OFFGAS
   SAMPLING
   INSTRUMENT SENSING
   B. THE FOLLOWING LINES SHOULD NOT BE POCKETED:
   PROCESS REAGENT ADDITION
   DECONTAMINATION
   C. THE SPARGE AND STEAM JET LINES WILL BE POCKETED.

6) SEE DRAWING 1560-CPP-666-V-1 FOR HVAC SYMBOLS AND ABBREVIATIONS.

7) FOR THE EQUIPMENT IDENTIFICATION CODE, SEE APPENDIX B, ICPP SUPPLEMENT TO ID ENGINEERING STANDARDS.

8) THIS SYMBOL INCLUDES THE USE OF A PURGE ROTAMETER & ΔP REGULATOR, FOR INSTRUMENTATION PURPOSES.

9) PNEUMATIC INSTRUMENTATION LINES INSIDE THE PROCESS CELL WILL BE GIVEN LINE NUMBERS BECAUSE PIPING SPECIFICATIONS MUST BE DESIGNATED FOR THESE LINES

10) HOSES AND HOSE CONNECTIONS, UNLESS DESIGNATED AS A SPECIALITY ITEM, ARE NOT IN CONTRACT AND ARE TO BE SUPPLIED BY OTHERS.

11) ALL DRAIN VALVES, SAMPLE VALVES & HOSE CONN. ARE NORMALLY CLOSED UNLESS OTHERWISE NOTED.

12) ALL PIPING HIGH POINTS SHALL BE VENTED AND ALL LOW POINTS SHALL BE DRAINED UNLESS OTHERWISE NOTED.

13) FOR FREEZE PLUG DETAIL SEE PIPING DWG.

PIPING AND P&ID SYMBOLS

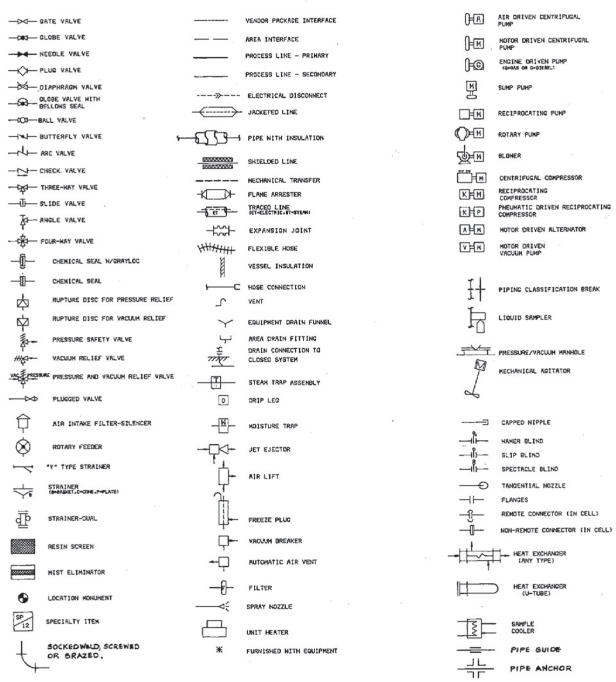

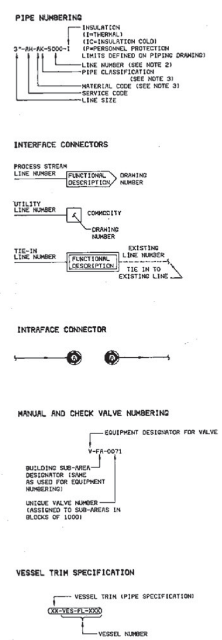

EQUIPMENT NUMBERING

EQUIPMENT CATEGORY & CENTURY NUMBER

VESSELS, DISSOLVERS, SCRUBBERS	- 100
PUMPS, BLOWERS	- 200
HEAT EXCHANGERS, CONDENSERS	- 300
COMPRESSORS, AGITATORS	- 400
JETS	- 500
AIRLIFTS	- 550
SAMPLERS	- 600
HOPPERS/FILTERS/SEPARATORS	- 800
SPEC. MECH. EQUIPMENT	- 900
INSTRUMENTS (NOT ASSOCIATED WITH ANY SPECIFIC EQUIPT.)	- 000

VES-FC-121

ASSIGNED EQUIPMENT NUMBER

SUB-AREA DESIGNATION

CS - CHEMICAL STORAGE
FA - ACCESS AREA
FC - FLUORINEL PROCESS CELL
FE - FAST FACILITY EXTERIOR (YARD AREA)
FH - CELL MAINT. & LOAD OUT AREA
FI - INSTRUMENT & TRANSMITTER AREA
FL - FLUORINEL SERVICE AREA
FM - MAKEUP AREA
FO - OPERATING AREA
FP - PERSONNEL & CONTROL ROOM AREA
FR - TRUCK RECEIVING BAY
CASK RECEIVING AREA
FS - FUEL HANDLING & TRANSFER AREA
FUEL STORAGE AREA
FUEL CUTTING & PREPARATION AREA
FT - WATER TREATMENT AREA
FV - HEATING AND VENTILATION
FW - VALVE VAULT

SYSTEM & DECADE NUMBER

FLUORINEL & UTILITIES

PROCESS HEATING & COOLING	- 0
LINE ONE EQUIPMENT	- 1
LINE TWO EQUIPMENT	- 2
LINE THREE EQUIPMENT	- 3
COMMON PROCESS EQUIPMENT	- 4
PROCESS MAKEUP SYSTEM	- 5
PROCESS FEED SYSTEM	- 6
UTILITY SYSTEMS	- 7
HVAC SYSTEMS	- 8 & 9

FUEL STORAGE & UTILITIES

PROCESS EQUIPMENT	- 0,1
REGENERATION & MAKEUP EQUIPMENT	- 2
WASTE SYSTEMS EQUIPMENT	- 3,4 & 5
UTILITY SYSTEMS	- 6 & 7
HVAC SYSTEMS	- 8 & 9

SERVICE CODE

AH	AMMONIUM HYDROXIDE	LH	AIR (HUMIDIFIED)
AN	ALUMINUM NITRATE	LS	LOW PRESSURE STEAM
BA	BREATHING AIR	MN	MERCURIC NITRATE
BR	BASIN WATER RETURN	MG	MAKEUP OFF GAS
BS	BASIN WATER SUPPLY	NA	NITRIC ACID
BW	BASIN WATER	NH	NITROGEN GAS (HUMIDIFIED)
CC	CASK COOLANT	NR	NITROGEN GAS (DRY)
CD	CADMIUM OXIDE	NW	NUCLEAR POISONED WATER
CG	CELL OFF GAS	ON	OXYGEN
CL	CHLORINE	PC	PROCESS SOLUTION (COMPLEXED)
CN	CADMIUM NITRATE	PE	PROCESS EQUIPMENT WASTE
CO	CHROMIC OXIDE	PF	PRESSURIZED COOLING/HEATING SUPPLY
CP	CADMIUM SULFATE	PH	HYDROGEN PEROXIDE
CR	CHILLED WATER RETURN	PL	PROCESS WASTE LOW LEVEL
CS	CHILLED WATER SUPPLY	PP	PROPANE
CT	CONDENSATE	PR	PRESSURIZED COOLING/HEATING RETURN
CW	POTABLE WATER	PS	PROCESS SOLUTION
DC	DECONTAMINANT	PU	PROCESS SOLUTION (UNCOMPLEXED)
DE	DIATOMACEOUS EARTH	PW	PROCESS WASTE HIGH LEVEL
DG	DISSOLVER OFF GAS	RD	REFRIGERANT HOT GAS
DL	DIESEL OIL	RG	RARE GAS
DW	DEIONIZED WATER	RL	REFRIGERANT LIQUID
FL	FUEL OIL	RS	REFRIGERANT SUCTION
FP	FILTERED PRODUCT	RW	RAW WATER
FW	FIRE WATER	SA	SULFURIC ACID
GR	GLYCOL SOLUTION RETURN	SG	SAMPLE OFF GAS
GS	GLYCOL SOLUTION SUPPLY	SH	SODIUM HYDROXIDE
HA	HIGH PRESSURE AIR ABOVE 50# (DRY)	ST	STARTING AIR
HB	HIGH PRESSURE AIR 350# (DRY)	SV	SANITARY VENT
HC	HYDROCHLORIC ACID	SW	SERVICE WASTE
HF	HYDROFLUORIC ACID	TA	TRANSPORT AIR
HW	HYDROGEN	TW	TREATED WATER
HS	HIGH PRESSURE STEAM	UV	UTILITY VENT
HW	HIGH LEVEL WASTE	VA	VACUUM AIR
HY	HYDRAULIC	VG	VESSEL OFF GAS
LA	LOW PRESSURE AIR UNDER 50# (DRY)	WO	SANITARY WASTE
LI	INSTRUMENT AIR (DRY)	XW	CHEMICAL WASTE
LO	LUBE OIL		
LN	LIQUID NITROGEN		

ABBREVIATIONS

AAV - AUTOMATIC AIR VENT
ARC - AUTOMATIC RECIRCULATION
BAS - BREATHING AIR STATION
BF - BOTTOM FLAT
BLD - BLIND
BOD - BOTTOM OR BACK OF DUCT
BOP - BOTTOM OR BACK OF PIPE
BVCS - BASIN VACUUM CLEANING STATION
CH-O - CHAIN OPERATED
CO - CLEAN OUT
CONC - CONCENTRIC
CSO - CAR SEAL OPEN
CSC - CAR SEAL CLOSED
DF - DRAIN FUNNEL
DRC - DRAIN CONNECTION
ECC - ECCENTRIC
ELL - ELBOW
ENC - ENCLOSURE
ESD - EMERGENCY SHUT-DOWN
FLG - FLANGE
FPM - FLUORINEL PROCESS MAKE-UP
LCP - LOCAL CONTROL PANEL
HLL - HIGH LIQUID LEVEL
HLW - HIGH LEVEL WASTE
HPO - HEALTH PHYSICS OFFICE
LC - LOCK CLOSED
LLL - LOW LIQUID LEVEL
LO - LOCK OPEN
MAH - MANHOLE
MIN - MINIMUM
MCRP - MAIN CONTROL ROOM PANEL
NC - NORMALLY CLOSED } POSITION OF MANUAL
NO - NORMALLY OPEN } VALVE DURING OPERATION
NIC - NOT IN CONTRACT
NLL - NORMAL LIQUID LEVEL
PEW - PROCESS EQUIPMENT WASTE
PIV - POST INDICATOR VALVE
PEN - PENETRATION
R - INSTRUMENT RACK
RED - REDUCER OR REDUCING i.e. RED TEE
RD - RUPTURE DISC
SC - SAMPLE CONNECTION
SOL - SOCKOLET
SP - SET POINT
SR - SHORT RADIUS
TF - TOP FLAT
TOS - TOP OF STEEL
U - UTILITY SUPPORT
US - UTILITY STATION
VB - VACUUM BREAKER
WP - WORK POINT
WOL - WELDOLET

APPROVED FOR CONSTRUCTION

NO	DATE	REVISIONS	LOC	RMP CO APPVD	APPVD	ENICL APPVD
3	7-21-81	REVISED PER RDFP 1906R1		[illegible]		[illegible]
2	10-30-80	REVISED PER ECR 168, DCN 2479		[illegible]		[illegible]
1	3/25/80	REVISED PER ECR 103 DCN 1368		[illegible]		LEW

	BY	DATE
DESIGNED	[illegible]	[illegible]
DRAWN	P.F. [illegible]	6/2/78
CHECKED	[illegible]	[illegible]
APPROVED	[illegible]	[illegible]

APPROVALS

ORGAN.	BY	DATE
ACC	[illegible]	[illegible]

THE RALPH M. PARSONS COMPANY
ARCHITECTS-ENGINEERS
PASADENA, CALIFORNIA

FOR

U.S. ENERGY RESEARCH & DEVELOPMENT ADMINISTRATION
IDAHO OPERATIONS OFFICE
IDAHO FALLS, IDAHO

CPP AREA — BUILDING NO. CPP-666

FLUORINEL AND STORAGE FACILITY
MECHANICAL PROCESS
LEGEND & SYMBOLS

FX

CONTROLLED DOCUMENT CLASS 1

INDEX CODE NUMBER

AREA	DWG TYPE	CL	DWG	SERIAL
200	0666	24	693	142644

SCALE: NONE
DATE ISSUED: 10-27-78
DWG. NO. 1560-CPP-666-P-20 — REV. NO. 3

PROJECT NO 5586-7304
HP0896

MAINTAINED AS-BUILT

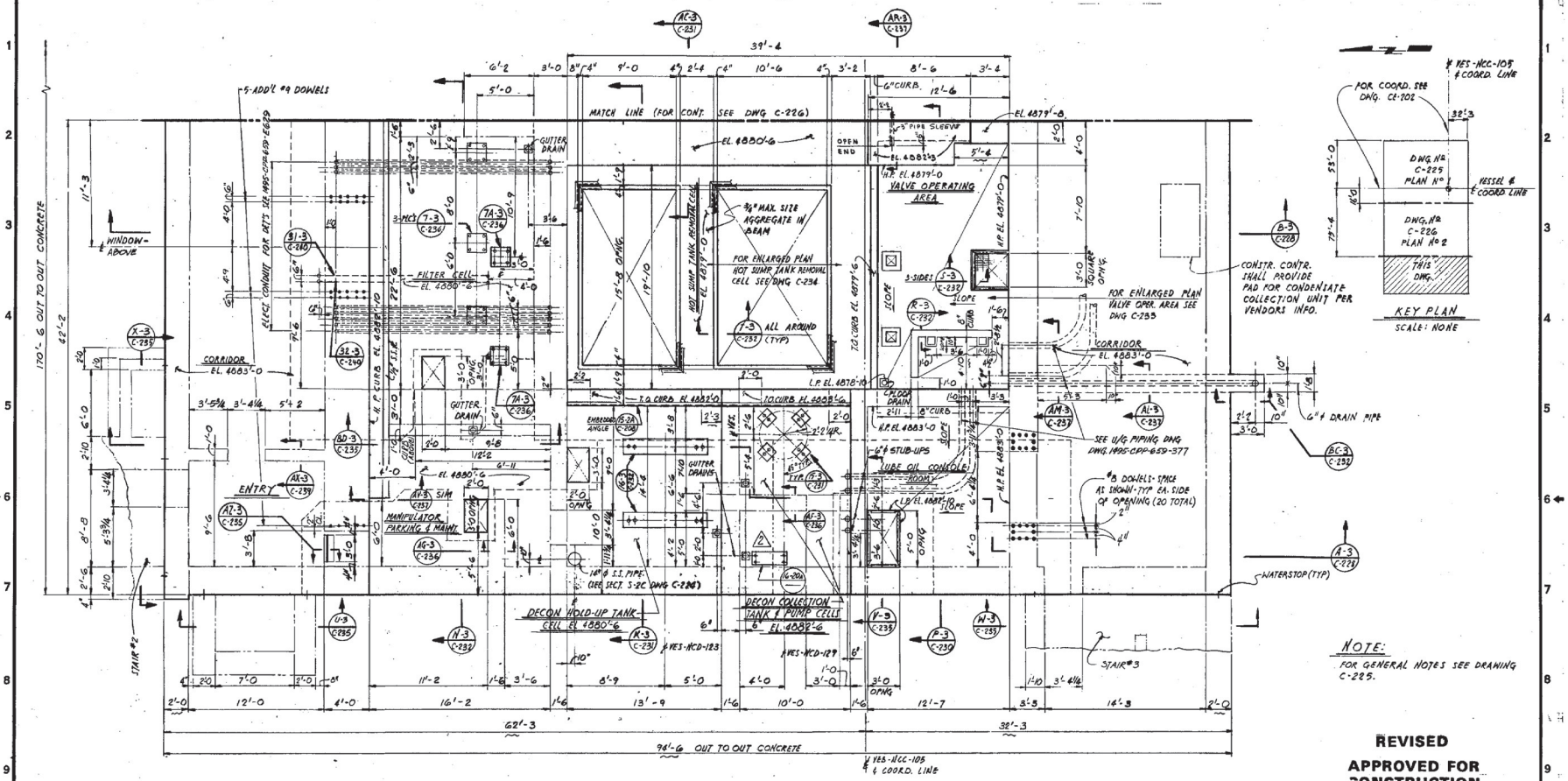

REVISED

APPROVED FOR CONSTRUCTION

NO	DATE	DESCRIPTION	LOC	APPRD	APPRD
2	2-24-77	REVISED PER AD DOC & DCR 529			
1	4/6/77	REV PER DCN-93-1 & 101-1			

REVISIONS

ALLIED CHEMICAL CORPORATION
IDAHO CHEMICAL PROGRAMS - OPERATIONS OFFICE
IDAHO FALLS, IDAHO

THIS DOCUMENT IS RELEASED 4-14-77 AND SUBSEQUENTLY CONTROLLED IN ACCORDANCE WITH ACC STANDARD PRACTICES.

CPP AREA — BLDG. NO. 659

3RD LEVEL FLOOR SLAB PLAN NO 3
CALCINING AREA
NEW WASTE CALCINING FACILITY

FLUOR
ENGINEERS AND CONSTRUCTORS, INC.
LOS ANGELES, CALIFORNIA

U.S. ENERGY R&D ADMINISTRATION
IDAHO OPERATIONS OFFICE
IDAHO FALLS, IDAHO

IN-PLANT CODE: NCM

	BY	DATE
DRAWN	T. MARTIN	2-24-77
CHECKED	W. PARKE	2-24-77
APPROVED	F. KEY	2-24-77
APPROVED	T. Martin	2-24-77
APPROVED	[illegible]	2-24-77
APPROVED	[illegible]	2-24-77
ACC APPROVED	[illegible]	4-14-77

SCALE: 1/4"=1'-0
DATE: 4-14-77

INDEX CODE NUMBER: 2000659 62287 132378

DWG. NO. 1495-CPP-659-C-227 — REV. 2

FLUOR CONTRACT Q 65504

132378

DRAWING NUMBER

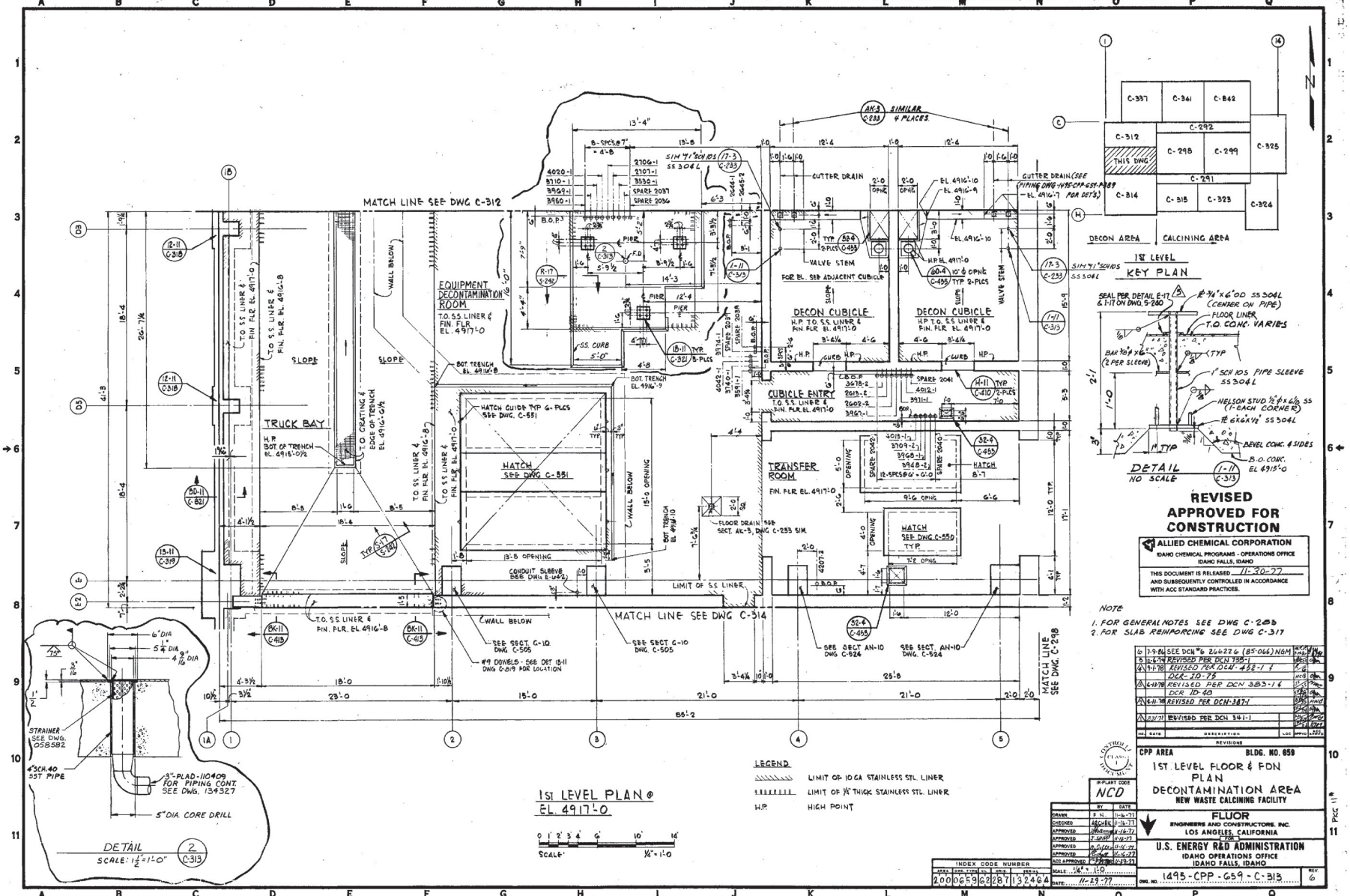

REVISED APPROVED FOR CONSTRUCTION

ALLIED CHEMICAL CORPORATION
IDAHO CHEMICAL PROGRAMS - OPERATIONS OFFICE
IDAHO FALLS, IDAHO
THIS DOCUMENT IS RELEASED 11-20-77 AND SUBSEQUENTLY CONTROLLED IN ACCORDANCE WITH ACC STANDARD PRACTICES.

NO.	DATE	DESCRIPTION	LOC	APPD
6	7-9-86	SEE DCN #6 264226 (85-066) NGM		
5	12-6-79	REVISED PER DCN 795-1		
4	9-1-78	REVISED PER DCN 452-1 & DCR-ID-75		
3	6-13-78	REVISED PER DCN 383-1 & DCR ID-69		
2	6-11-78	REVISED PER DCN-387-1		
1	2-21-77	REVISED PER DCN 341-1		

REVISIONS

CPP AREA — BLDG. NO. 659

1ST LEVEL FLOOR & FDN PLAN
DECONTAMINATION AREA
NEW WASTE CALCINING FACILITY

FLUOR
ENGINEERS AND CONSTRUCTORS, INC.
LOS ANGELES, CALIFORNIA

U.S. ENERGY R&D ADMINISTRATION
IDAHO OPERATIONS OFFICE
IDAHO FALLS, IDAHO

1495-CPP-659-C-313 — REV. 6

IN-PLANT CODE: NCD

	BY	DATE
DRAWN	F. N.	11-16-77
CHECKED	ARCHER	11-16-77
APPROVED	[illegible]	11-16-77
APPROVED	[illegible]	11-16-77
APPROVED	[illegible]	11-16-77
APPROVED	[illegible]	11-16-77
ACC APPROVED	[illegible]	11-19-77

INDEX CODE NUMBER: 2000659 6 2287 132464

SCALE: 1/4" = 1'-0"

DATE: 11-29-77

FLUOR CONTRACT 455504

PAGE 11

132464

RADIUM DRAWING

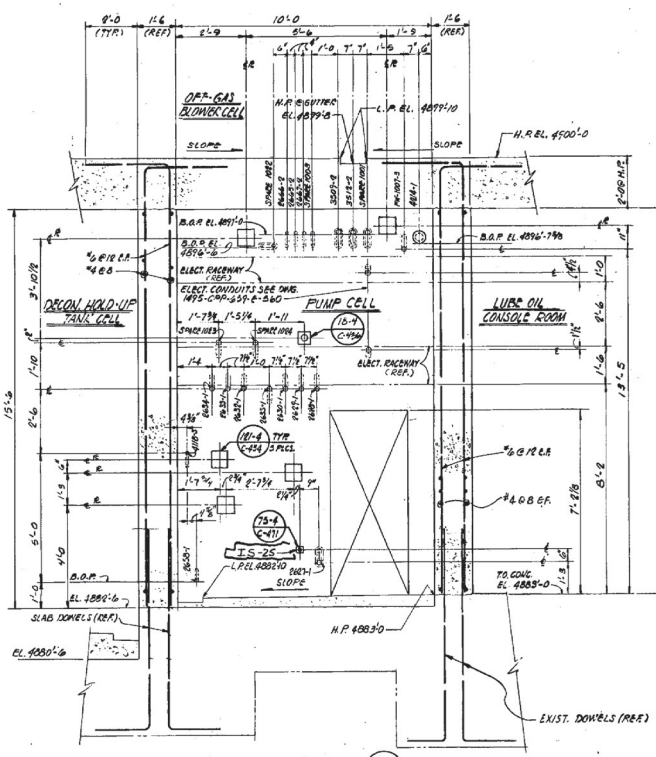

SECTION HX-4 C-243
LOOKING EAST

FOR OPPOSITE SIDE SEE SECT. XY-4 THIS DWG.

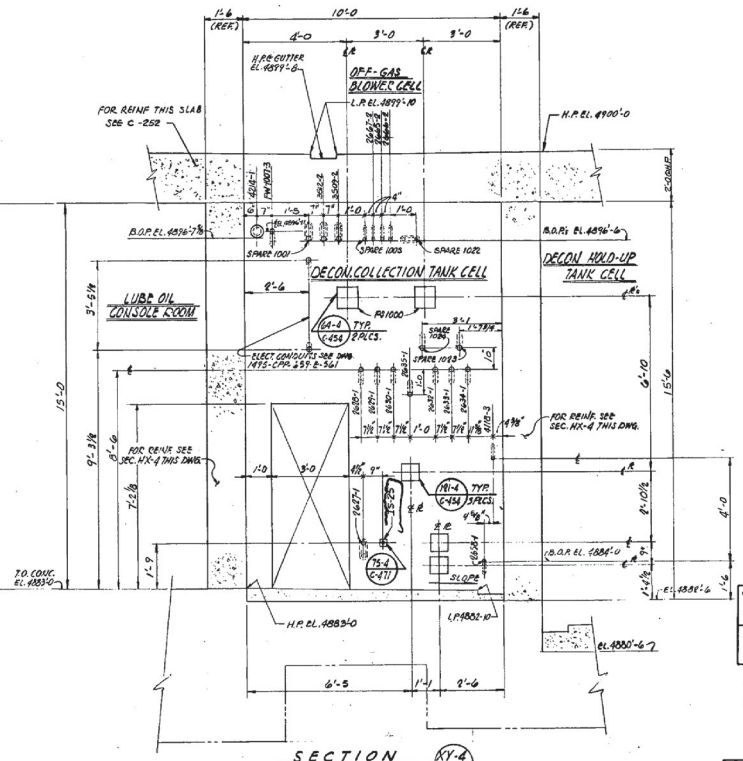

SECTION XY-4 C-243
LOOKING WEST

FOR OPPOSITE SIDE SEE SECT. HX-4 THIS DWG.

SCALE: 0 1'-0 2'-0 3'-0 4'-0 5'-0 ½" = 1'-0

APPROVED FOR CONSTRUCTION

ALLIED CHEMICAL CORPORATION
IDAHO CHEMICAL PROGRAMS - OPERATIONS OFFICE
IDAHO FALLS, IDAHO

THIS DOCUMENT IS RELEASED 10-3-77 AND SUBSEQUENTLY CONTROLLED IN ACCORDANCE WITH ACC STANDARD PRACTICES.

NOTE:
FOR GENERAL NOTES SEE DWG. C-241

NO.	DATE	DESCRIPTION	LOC	APP'D	CHK'D
1	12-5-80	SEE DCN 02-3096			

REVISIONS

CPP AREA BLDG. NO. 659
DECON. COLL. TANK & PUMP CELLS
WALL SECTIONS
CALCINING AREA
NEW WASTE CALCINING FACILITY

FLUOR
ENGINEERS AND CONSTRUCTORS, INC.
LOS ANGELES, CALIFORNIA

U.S. ENERGY R&D ADMINISTRATION
IDAHO OPERATIONS OFFICE
IDAHO FALLS, IDAHO

IN-PLANT CODE NCC

	BY	DATE
DRAWN	M.I.F.	9-21-77
CHECKED	J.CHU	9-21-77
APPROVED	[illegible]	9-26-77
APPROVED	[illegible]	9-26-77
APPROVED	[illegible]	9-26-77
APPROVED	[illegible]	9-26-77
ACC APPROVED	[illegible]	10-3-77

SCALE: 1/8" = 1'-0
DATE: 9-30-77

INDEX CODE NUMBER

AREA	SYS	TYPE	CL	DWG	SHEET	REVISION
2000	659	02	2B7	32545		

DWG. NO. 1495-CPP-659-C-394 REV. 1

FLUOR CONTRACT #453504

FOR #4C

DRAWING NUMBER

DRAWING NUMBER

DRAWING NUMBER

DRAWING NUMBER

SK5081

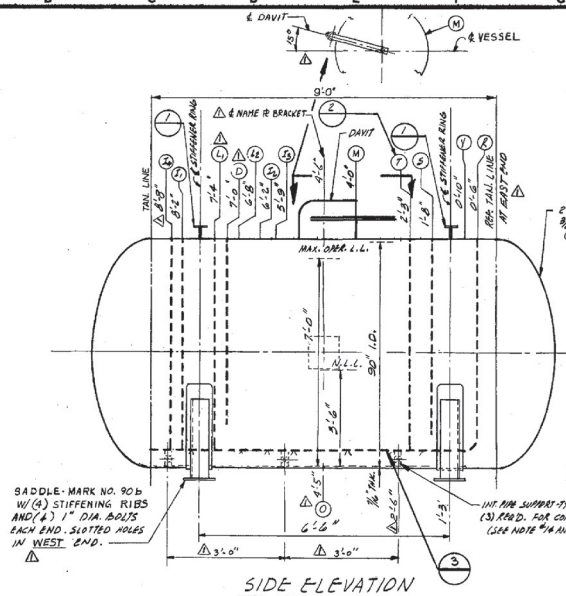

SIDE ELEVATION

ONE VESSEL REQUIRED

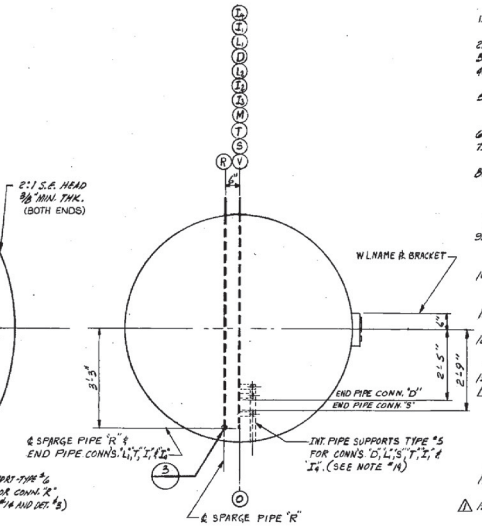

EAST END ELEVATION

NOTES

1. VESSEL FABRICATOR SHALL FURNISH AND INSTALL ALL PARTS UNLESS SPECIFIED OTHERWISE.
2. VESSEL CAPACITY = 3,800 GALLONS. (FULL)
3. SPECIFIC GRAVITY OF LIQUID = 1.03 @ 150°F.
4. DISTANCES ARE FROM REF. TANGENT LINE EXCEPT AS NOTED.
5. GASKETS: FLEXITALLIC SPIRAL WOUND (304L WITH SILICA-AMERICAN CRICIBOLITE FILLER) OR PURCHASER APPROVED EQUAL.
6. "DELETED"
7. NOMINAL CORROSION ALLOWANCE = 0.125" SERVICE CORROSION ALLOWANCE PLUS 0.010" CLEANING ALLOWANCE = 0.135" TOTAL
8. VESSEL SUPPORT SADDLES AND ANCHOR BOLTS ARE DESIGNED FOR DESIGN BASIS EARTHQUAKE (D.B.E.). BASED ON THE SUPPORT POINT RESPONSE SPECTRA AT 2% DAMPING AND NATURAL VESSEL FREQUENCY GREATER THAN 33 HZ, THE PEAK ACCELERATION IS 0.23 G. (HORIZ.) AND 0.32 G. (VERT.).
9. INTERNAL PIPE SHALL BE SAME NOMINAL SIZE AND SCHEDULE AS NOZZLE NECK TO WHICH ATTACHED, UNLESS NOTED OTHERWISE.
10. ALL INTERNAL SURFACES (INCLUDING WELDS) SHALL BE SMOOTH, FREE OF WELD SPATTER, BURRS AND ANY OTHER IRREGULARITIES.
11. NO REINFORCING PADS ALLOWED, EITHER AT OPENINGS OR AT EXTERNAL ATTACHMENTS.
12. ALL STUD END NOZZLE NECKS SHALL BE BEVELED FOR WELDING TO EXTERNAL PIPE PER REF. DWG. 1495-CPP-659-V-161.
13. EXTERNAL PIPING WELDED TO STUB END CONNS. WILL BE ½" SCH 80S FOR CONN'S; ½ SCH 40S FOR CONN'S "D" AND "L₁"; 1½" SCH 40S FOR CONN. "R"; 3" SCH. 40S FOR CONN. "V" AND "I₂"; AND SCH. 80S (NOMINAL SIZE PER "CONNECTION SCHEDULE") FOR EACH OF THE REMAINING STUB END CONNECTIONS. STUB END I.D. SHALL BE TAPERED TO MATCH EXTERNAL PIPING I.D. PER SPEC. SP-453504-42-2 PARA. 7.4.7.
14. INTERNAL PIPE SUPPORT DETAILS WILL BE PER REFERENCE DRAWING 1495-CPP-659-V-161.
15. "DELETED"
16. ALL 3" AND SMALLER PIPE TO SHELL OR HEAD WELDS SHALL BE LIQUID PENETRANT INSPECTED AT EACH LAYER IN LIEU OF 100% RADIOGRAPHY PER SPEC. SP-453504-90-1.
17. FOR MANUFACTURING TOLERANCES, SEE SPEC. SP-453504-42-2, PARA. 8.4 AND FIG. 2.

DESIGN DATA

1. DESIGN BASIS	ASME SECTION VIII DIV. 1 (DESIGN AND CONSTRUCTION)
2. STAMPING REQUIREMENTS:	(NONE)
3. SPECS:	SP-453504-42-2 AND -90-1
4. DESIGN: PRESSURE	30 INT./7.4 EXTERNAL PSIG, TEMP. 194 °F
5. OPER.: PRESSURE	0.3 EXTERNAL PSIG, TEMP. 150 °F
6. POSTWELD HEAT TREATMENT	(NONE)
7. WELD EXAMINATION:	FULL-RADIOGRAPH & LIQUID PENETRANT PER SPEC. SP-453504-90-1 (SEE NOTE #16)
8. JOINT EFFICIENCY	SHELL 100% HEADS 100%
9. NOM. CORROSION ALLOWANCE (SEE NOTE #7)	SHELL 0.135" HEADS 0.135" NOZZLE NECKS 0.135"
10. MAX. ALLOWABLE WORKING PRESSURE @ DESIGN TEMP.	30 PSIG
11. BASIS FOR CALCULATED TEST PRESSURE	75 (M.A.P. - NEC) PSIG
SHOP TEST LIMITED BY	SHELL
12. HYDROSTATIC TEST PRESSURE SHOP	110 PSIG FIELD 45 (NEC) PSIG
13. MATERIAL SPECIFICATIONS	
(a) SHELL	SA-240-304L
(b) HEADS	SA-240-304L
(c) LINING CLADDING	(NONE)
(d) NOZZLE NECKS & PIPE	SA-312-TP304L
(e) FLANGES (EXTERNAL)	SA-182-F304L
(f) COUPLINGS (SOCKET WELD)	SA-182-F304L
(g) GASKETS	(SEE NOTE #5)
(h) BOLTING (EXTERNAL)	SA-193-B8C-CL.1 / NUTS - SA-194-8C
(i) BOLTING (INTERNAL)	SA-193-B8C-CL.1 / NUTS - SA-194-8C
(k) INTERNALS	SA-240-304L
(l) SUPPORT SADDLES	SA-240-304L
(m) STIFFENER RINGS	SA-240-304L
(n)	
(o) EXTERNAL APPURTENANCES	SA-240-304L
14. M.H.	FURN. W/ BOLTED COVER, STUDS, GASKETS, & NUTS
15. PAINT PER SP. -	(NONE)
16. INSULATION (NONE)	NO. OF LAYERS / TOTAL THK.
17. FIREPROOFING (BY OTHERS) INSIDE & OUTSIDE SKIRT	THK. / MATL. / SQ. FT. / CU. FT.
18.	
19. INSPECTION BY	PURCHASER

NOZZLE PROJECTIONS ARE FROM ℄ OF VESSEL TO EXTREME FACE OF FLANGE OR STUB END, EXCEPT AS NOTED.

4'-3½" FOR 4" & SMALLER

4'-7½" FOR 18" & LARGER

ESTIMATED VESSEL WEIGHTS

	FURN. BY / INSTALLED BY	LB.
(a)		
(b) FABR. (LESS TRAYS)		10,160 LB.
(c) EMPTY (LESS OPER. LIQUID)		10,930 LB.
(d) OPERATING		23,340 LB.
(e) FULL OF WATER		42,070 LB.
(f) OPERATING (@ MAX. OPER. L.L. = 75°F)		42,350 LB.

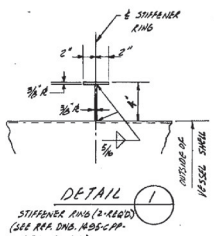

DETAIL 1

STIFFENER RING (2-REQ'D) (SEE REF. DWG. 1495-CPP-659-V-160)

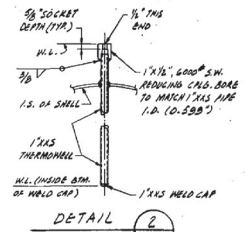

DETAIL 2

THERMO WELL, CONN. "T"

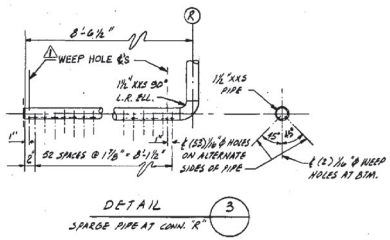

DETAIL 3

SPARGE PIPE AT CONN. "R"

MARK	NO. REQ'D	SIZE	NOZZLE NECK SCHED.	FLANGE AND/OR FACING	DESCRIPTION
I₂	1	1½"	XXS	STUB END	INLET W/ INT. PIPE
S	1	½"	XXS	STUB END	SAMPLE SUPPLY W/ INT. PIPE
R	1	1½"	XXS	STUB END	SPARGE W/ INT. PIPE (SEE DETAIL #3)
T	1	1"	XXS	STUB END	THERMOWELL W/ INT. PIPE (SEE DETAIL #2)
O	1	2"	160	STUB END	DRAIN
M	1	24"	30	FLAT FACE	MANHOLE
L₂	1	1"	XXS	STUB END	LEVEL / PRESSURE
L₁	1	1"	XXS	STUB END	LEVEL / DENSITY W/ INT. PIPE
V	1	3"	160	STUB END	VENT
I₂, I₁	2	1½"	XXS	STUB END	INLETS
I₁	1	3"	160	STUB END	INLET W/ INT. PIPE
D	1	1"	XXS	STUB END	DENSITY W/ INT. PIPE

CONNECTION SCHEDULE

-V-161	STANDARD DETS. FOR INT. SUPPS., STUB CONN. WELD PREP., MANHOLE COVER DAVIT & NAME PLATE BRACKET.
-V-160	SADDLE DETAILS FOR HORIZONTAL VESSELS

DWG. NO. 1495-CPP-659 — REFERENCE DRAWING

REV.	DATE	REVISION DESCRIPTION	INITIALS	APP.
1	3/16/77	ORIENTATION ADDED AND REVISED AS INDICATED BY △ PER DCN # 85-1	JLB	

PROCESS ENGR. APPROVED R. W. Keller DATE 3-28-77

INSTRUMENT ENGR. APPROVED J.J. PAUL DATE 3-28-77

INSTRUMENT APPROVAL CONSISTS OF CHECKING SIZE & ELEVATION OF INSTRUMENT CONNECTIONS.

	VESSEL	TRAYS
PURCHASE ORDER NO.		
FABRICATOR		

REVISED APPROVED FOR CONSTRUCTION

ALLIED CHEMICAL CORPORATION
IDAHO CHEMICAL PROGRAMS - OPERATIONS OFFICE
IDAHO FALLS, IDAHO

THIS DOCUMENT IS RELEASED 3-30-77 AND SUBSEQUENTLY CONTROLLED IN ACCORDANCE WITH ACC STANDARD PRACTICES.

CPP AREA BLDG. NO. 659

ITEM NO. VES-NCD-123

DECONTAMINATION AREA HOLD-UP TK.

DECON AREA

NEW WASTE CALCINING FACILITY

IN PLANT CODE NCD

	BY	DATE
DRAWN	R. EVANS	3/16/77
CHECKED		3-22-77
APPROVED		3-28-77
APPROVED		3-29-77
APPROVED		3-29-77
APPROVED		3-29-77
ACC APPROVED		3-29-77

SCALE: NONE

DATE 3-29-77

FLUOR
ENGINEERS AND CONSTRUCTORS, INC.
LOS ANGELES, CALIFORNIA

U.S. ENERGY R&D ADMINISTRATION
IDAHO OPERATIONS OFFICE
IDAHO FALLS, IDAHO

DWG. NO. 1495-CPP-659-V-123 SHEET 1 OF 1 REV. 1

INDEX CODE NUMBER: 20006591530197 / 138797

FLUOR CONTRACT 453504

402

138797

DRAWING NUMBER

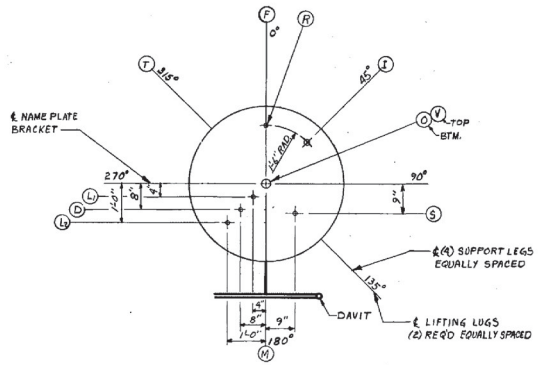

PLAN
NORTH @ 0°

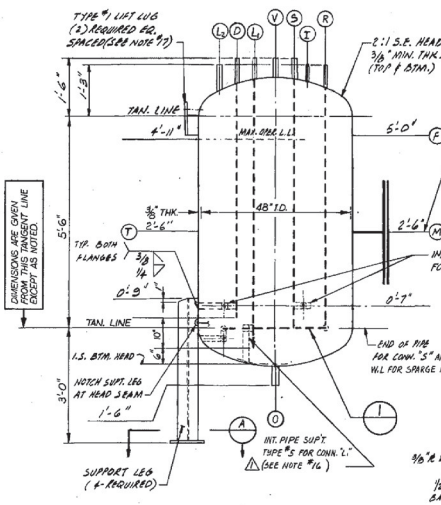

ELEVATION
SEE PLAN FOR TRUE ORIENTATION ONE VESSEL REQ'D.

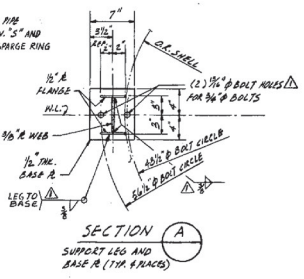

SECTION A
SUPPORT LEG AND BASE R. (TYP. 4 PLACES)

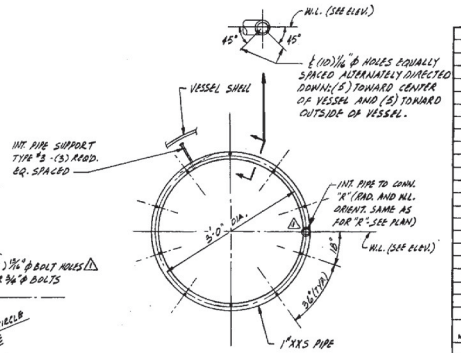

DETAIL 1
SPARGE RING AT CONN. "R"

NOTES

1. VESSEL FABRICATOR SHALL FURNISH AND INSTALL ALL PARTS UNLESS SPECIFIED OTHERWISE.
2. SPECIFIC GRAVITY OF LIQUID = 1.03 @ 150°F
3. VESSEL CAPACITY = 550 GALLONS (TO OVERFLOW)
4. "DELETED"
5. GASKETS = FER/TALLIC SPIRAL WOUND (304L WITH BLUE ARRAN CROCIDOLITE FILLER) OR PURCHASER APPROVED EQUAL.
6. NOMINAL CORROSION ALLOWANCE = 0.125" SERVICE CORROSION ALLOWANCE PLUS 0.010" CLEANING ALLOWANCE = 0.135" TOTAL
7. ALL STUB END NOZZLE NECKS SHALL BE BEVELED FOR WELDING TO EXTERNAL PIPE PER REF. DWG. 1495-CPP-659-V-161.
8. EXTERNAL PIPE WELDED TO STUB END CONNECTIONS WILL BE 1/4" SCH. 80S FOR CONN. "S"; 1/4" SCH. 40S FOR CONNECTIONS "L1-2" AND "D"; AND SCH. 80S (NOMINAL SIZE PER "CONNECTION SCHEDULE") FOR EACH OF THE REMAINING STUB END CONNS. STUB END I.D. SHALL BE TAPERED TO MATCH EXTERNAL PIPING I.D. PER SPEC. SP-453504-42-2, PARA. 7.4.7.
9. INTERNAL PIPE SHALL BE SAME NOMINAL SIZE AND SCHEDULE AS NOZZLE NECK TO WHICH ATTACHED, UNLESS NOTED OTHERWISE.
10. ALL INTERNAL SURFACES (INCLUDING WELDS) SHALL BE SMOOTH, FREE OF WELD SPATTER, BURRS AND ANY OTHER IRREGULARITIES.
11. NO REINFORCING PADS ALLOWED, EITHER AT OPENINGS OR AT EXTERNAL ATTACHMENTS.
12. VESSEL SUPPORT LEGS, BASE PLATES AND ANCHOR BOLTS ARE DESIGNED FOR OPERATING BASE EARTHQUAKE (O.B.E.). BASED ON THE SUPPORT POINT RESPONSE SPECTRA AT 2% DAMPING AND NATURAL VESSEL FREQUENCY GREATER THAN 33 HZ, THE PEAK ACCELERATION IS 0.16 G. (HORIZ.) AND 0.110 G. (VERT.).
13. "DELETED"
14. A MINIMUM 10% OF THE CONNECTIONS 3" AND SMALLER SHALL BE LIQUID PENETRANT INSPECTED AT EACH LAYER OF THEIR WELDS TO HEAD OR SHELL. THIS IS IN LIEU OF SPOT RADIOGRAPHY.
15. FOR MANUFACTURING TOLERANCES, SEE SPEC. SP-453504-42-2, PARA. 8.4 AND FIG. 2.
16. INTERNAL PIPE SUPPORT DETAILS AND MANHOLE COVER DAVIT DETAILS SHALL BE PER REFERENCE DRAWING NO. 1495-CPP-659-V-161.
17. DETAILS FOR LIFTING LUGS SHALL BE PER REF. DRAWING NO. 1495-CPP-659-V-164.

REVISED APPROVED FOR CONSTRUCTION

ALLIED CHEMICAL CORPORATION
IDAHO CHEMICAL PROGRAMS - OPERATIONS OFFICE
IDAHO FALLS, IDAHO
THIS DOCUMENT IS RELEASED 3-30-77 AND SUBSEQUENTLY CONTROLLED IN ACCORDANCE WITH ACC STANDARD PRACTICES.

MARK	NO. REQ'D	SIZE	NOZZLE NECK SCHED.	RATING AND/OR FACING	DESCRIPTION
M	1	24"	30	150# RF	MANHOLE
T	1	1½"	XXS	150# RF	THERMOWELL CONN.
V	1	2"	160	STUB END	VENT
S	1	½"	XXS	STUB END	SAMPLE SUPPLY ½" INT. PIPE
R	1	1"	XXS	STUB END	SPARGE ½" INT. PIPE (SEE DETAIL #1)
O	1	2"	160	STUB END	DRAIN
L_2	1	1"	XXS	STUB END	LEVEL / PRESSURE
L_1	1	1"	XXS	STUB END	LEVEL / DENSITY ½" INT. PIPE
I	1	1½"	XXS	STUB END	DECON INLET
F	1	1½"	XXS	STUB END	OVERFLOW
D	1	1"	XXS	STUB END	DENSITY ½" INT. PIPE

CONNECTION SCHEDULE

-V-164	VESSEL APPURTENANCES
-V-161	STANDARD DETS. FOR INT. SUPTS., STUB CONN. HOLD DOWN, MANHOLE COVER DAVITS AND NAME PLATE BRACKET
DWG. NO.	1495-CPP-659
CONTRACT NO. 453504	REFERENCE DRAWING

INDEX CODE NUMBER

AREA	DWG TYPE	CL	DWG	DETAIL
200	06659	53	287	132799

DESIGN DATA

1. DESIGN BASIS	ASME SECTION VIII DIV. I (DESIGN & CONSTRUCTION)
2. STAMPING REQUIREMENTS:	(NONE)
3. SPECS:	SP 453504-42-2 AND 90-100
4. DESIGN: PRESSURE	30 INT./14 EXTERNAL PSIG, TEMP. 194 °F
5. OPER.: PRESSURE	0.3 EXT. PSIG, TEMP. 150 °F
6. POSTWELD HEAT TREATMENT	(NONE)
7. WELD EXAMINATION:	SPOT-RADIOGRAPH (SEE NOTE #14)
8. JOINT EFFICIENCY	SHELL 85 % HEADS 85 %
9. NOM. CORROSION ALLOWANCE (SEE NOTE #6)	SHELL .135" HEADS .135" NOZZLE NECKS .135"
10. MAX. ALLOWABLE WORKING PRESSURE @ DESIGN TEMP.	30 PSIG
11. BASIS FOR CALCULATED TEST PRESSURE	114 (M.A.P.-N&C) PSIG
SHOP/[redacted] TEST LIMITED BY	SHELL
12. HYDROSTATIC TEST PRESSURE SHOP	174 PSIG FIELD 52 (N&C) PSIG
13. MATERIAL SPECIFICATIONS	
(a) SHELL	SA-240-304L
(b) HEADS	SA-240-304L
(c) LINING CLADDING	(NONE)
(d) NOZZLE NECKS & PIPE	SA-312-TP304L
(e) FLANGES (EXTERNAL)	SA-182-F304L
(f) COUPLINGS [redacted]	NONE
(g) GASKETS	(SEE NOTE #5)
(h) BOLTING (EXTERNAL)	SA-193-B8C-CL1 / NUTS SA-194-8C
(i) BOLTING (INTERNAL)	SA-193-B8C-CL1 / NUTS SA-194-8C
(k) INTERNALS	SA-240-304L
(l) SUPPORT LEGS	SA-240-304L
(m) BASE PLATES	SA-240-304L
(n)	
(o) EXTERNAL APPURTENANCES	SA-240-304L
14. M.H. [redacted] FURN. W/ [redacted] DAVITED COVER, STUDS, GASKETS & NUTS	
15. PAINT PER SP.-	NONE
16. INSULATION (NONE)	NO. OF LAYERS / TOTAL THK.
17. FIREPROOFING (BY OTHERS) INSIDE & OUTSIDE SKIRT	THK. / MATL. / SQ. FT. / CU. FT.
18.	
19. INSPECTION BY	PURCHASER [redacted]

NOZZLE PROJECTIONS ARE FROM ℄ OF VESSEL TO EXTREME FACE OF FLANGE OR STUB END EXCEPT AS NOTED.

2'-6½" FOR 4" & SMALLER

2'-10½" FOR CONN. "M"

ESTIMATED VESSEL WEIGHTS

(a)	FURN. BY / INSTALLED BY	LB.
(b) FABR. (LESS TRAYS)	3,485	LB.
(c) EMPTY (LESS OPER. LIQUID)	3,575	LB.
(d) OPERATING	8,915	LB.
(e) FULL OF WATER	8,950	LB.

DATE	REVISION DESCRIPTION	INITIALS	APP.
5/6/77	ADDED ORIENTATION AND REVISED AS INDICATED BY △ PER DCN # B5-1	[illegible]	[illegible]

PROCESS ENGR. APPROVED [illegible] DATE 3-25-77
INSTRUMENT ENGR. APPROVED JJ PAUL DATE 3-28-77
INSTRUMENT APPROVAL CONSISTS OF CHECKING SIZE & ELEVATION OF INSTRUMENT CONNECTIONS.

VESSEL	TRAYS
PURCHASE ORDER NO.	
FABRICATOR	

IN-PLANT CODE NCD

CPP AREA BLDG. NO. 659

ITEM NO. VES-NCD-129
COLLECTION TANK
DECON AREA
NEW WASTE CALCINING FACILITY

	BY	DATE
DRAWN	R.A. Ives	3-23-77
CHECKED	[illegible]	3-25-77
APPROVED	[illegible]	3-28-77
APPROVED	[illegible]	3-29-77
APPROVED	[illegible]	3-29-77
APPROVED	[illegible]	3-31-77
ACC APPROVED	[illegible]	3-29-77

SCALE: NONE
DATE 3-29-77

FLUOR
ENGINEERS AND CONSTRUCTORS, INC.
LOS ANGELES, CALIFORNIA
FOR
U.S. ENERGY R&D ADMINISTRATION
IDAHO OPERATIONS OFFICE
IDAHO FALLS, IDAHO

DWG. NO. 1495-CPP-659-V-129 SHEET 1 OF 1 REV. 1

FLUOR CONTRACT 453504

402

REF. NO. 19

REMOVED FROM ORIGINAL DRAWING

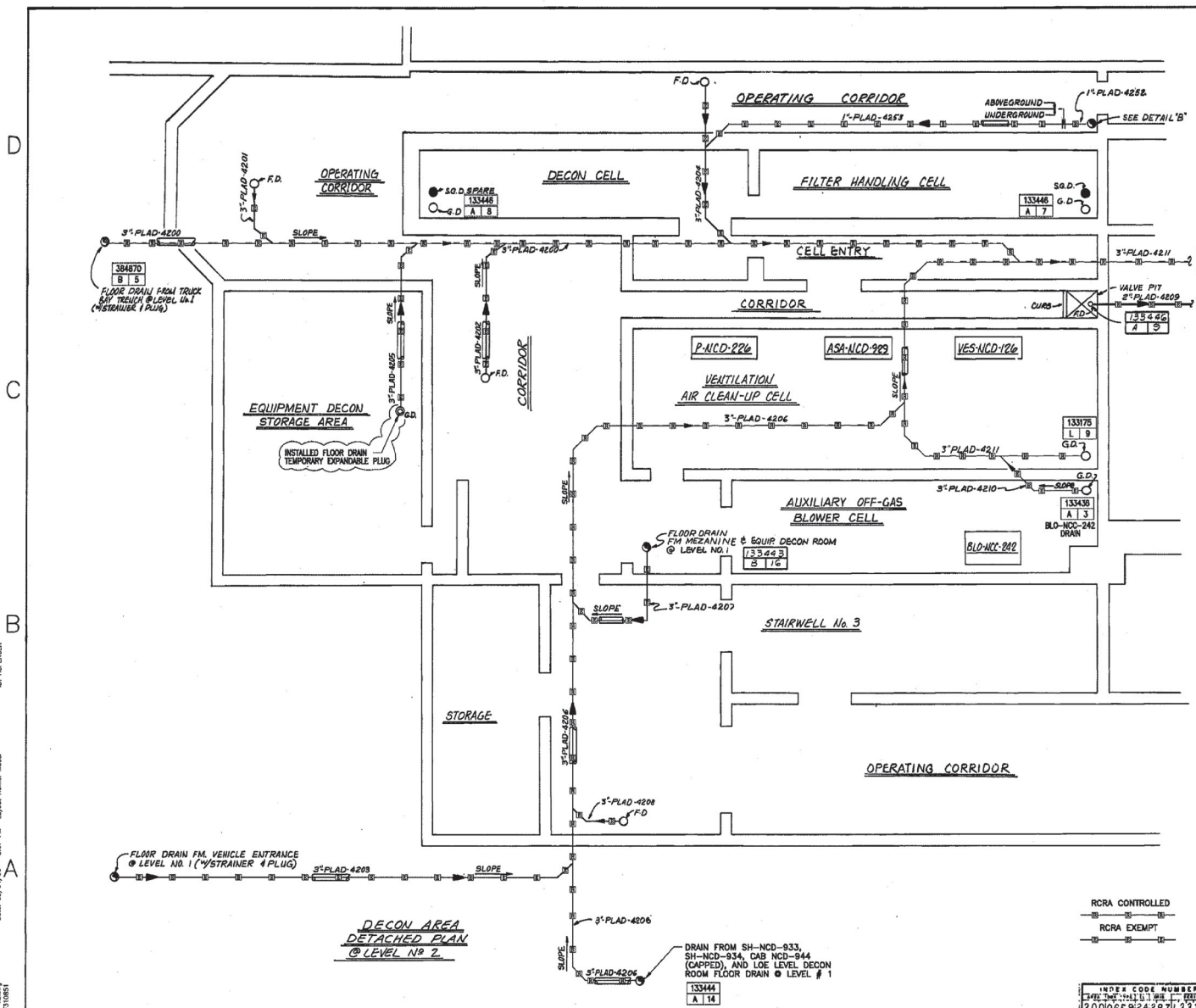
OPERATING CORRIDOR
DECON CELL
FILTER HANDLING CELL
CELL ENTRY
CORRIDOR
EQUIPMENT DECON STORAGE AREA
VENTILATION AIR CLEAN-UP CELL
AUXILIARY OFF-GAS BLOWER CELL
STAIRWELL No. 3
STORAGE
P-NCD-226
ASA-NCD-989
VES-NCD-126
BLD-NCC-242
3"-PLAD-4200
3"-PLAD-4201
3"-PLAD-4202
3"-PLAD-4203
3"-PLAD-4204
3"-PLAD-4205
3"-PLAD-4206
3"-PLAD-4207
3"-PLAD-4208
3"-PLAD-4209
3"-PLAD-4210
3"-PLAD-4211
1"-PLAD-4252
1"-PLAD-4253
SEE DETAIL "B"
ABOVEGROUND
UNDERGROUND
SLOPE
F.D.
G.D.
S.G.D. SPARE
VALVE PIT
CURB
FLOOR DRAIN FROM TRUCK BAY TRENCH @ LEVEL No. 1 (W/STRAINER & PLUG)
INSTALLED FLOOR DRAIN TEMPORARY EXPANDABLE PLUG
FLOOR DRAIN FM MEZANINE & EQUIP DECON ROOM @ LEVEL NO. 1
BLD-NCC-242 DRAIN
FLOOR DRAIN FM. VEHICLE ENTRANCE @ LEVEL NO. 1 (W/STRAINER & PLUG)
DRAIN FROM SH-NCD-933, SH-NCD-934, CAB NCD-944 (CAPPED), AND LOE LEVEL DECON ROOM FLOOR DRAIN @ LEVEL # 1
384870 B 5
133448 A 8
133446 A 7
133448 A 2
133446 A 3
133400 C 9
133175 L 9
133436 A 3
133443 B 16
133444 A 14
DECON AREA DETACHED PLAN @ LEVEL No 2.
RCRA CONTROLLED
RCRA EXEMPT
CALCINER EXHAUST PLENUM DRAIN CONNECTIONS
DECON EXHAUST PLENUM DRAIN CONNECTIONS
PL-22
PL-25
1"-PLAD-4252
1"-PLAD-4254
SEE THIS DWG, SECT. 10
DETAIL "B"
LEVEL NO. 1
NCD
ALLIED CHEMICAL CORPORATION
IDAHO CHEMICAL PROGRAMS - OPERATIONS OFFICE
IDAHO FALLS, IDAHO
THIS DOCUMENT IS RELEASED
AND SUBSEQUENTLY CONTROLLED IN ACCORDANCE WITH ACC STANDARD PRACTICES.
12 INCORPORATED FDC #3106 AS-BUILT AS OF 4-4-06 SEE DRF 310851 HS 05-04-06
11 AS BUILT AS OF 11-5-01 SEE DAR B7032 MEW 11-5-01 DRJ 11-5-01
10 SEE DAR 40349 MEW 8-2-99 GCB 8-2-99
9 SEE DAR #18651 MEW 1/27/98 DRJ 1-7-98
NO. REVISIONS DRAWN DATE APPROVED DATE
CPP AREA BLDG. NO. 659
UTILITY FLOW DIAGRAM PROCESS & UTILITY DRAIN LINES @ LEVELS No 1, 2 & 3
NEW WASTE CALCINING FACILITY
FLUOR
ENGINEERS AND CONSTRUCTORS, INC
LOS ANGELES, CALIFORNIA
FOR
U.S. ENERGY R&D ADMINISTRATION
IDAHO OPERATIONS OFFICE
IDAHO FALLS, IDAHO
DRAWN G.K.K. 9-9-77
CHECKED G.BRAD 9-9-77
APPROVED J.PAUL 9-9-77
SCALE NONE
DATE 9-20-77
INDEX CODE NUMBER
2 0 0 0 6 5 9 2 4 2 8 7 1 3 3 3 9 9
DWG. 1495-CPP-659-F-105
FRAME NO. 1 OF 4
REV 12
FLUOR CONTRACT NO 453504
REV 4 5/18/90
CAD OVERLAY DRAWING
File: 133399-12.dwg
Path: P:\DRF310851
Date: 05/04/06 - 3:07 PM
Layout Name: Model
ID: HSPENCER

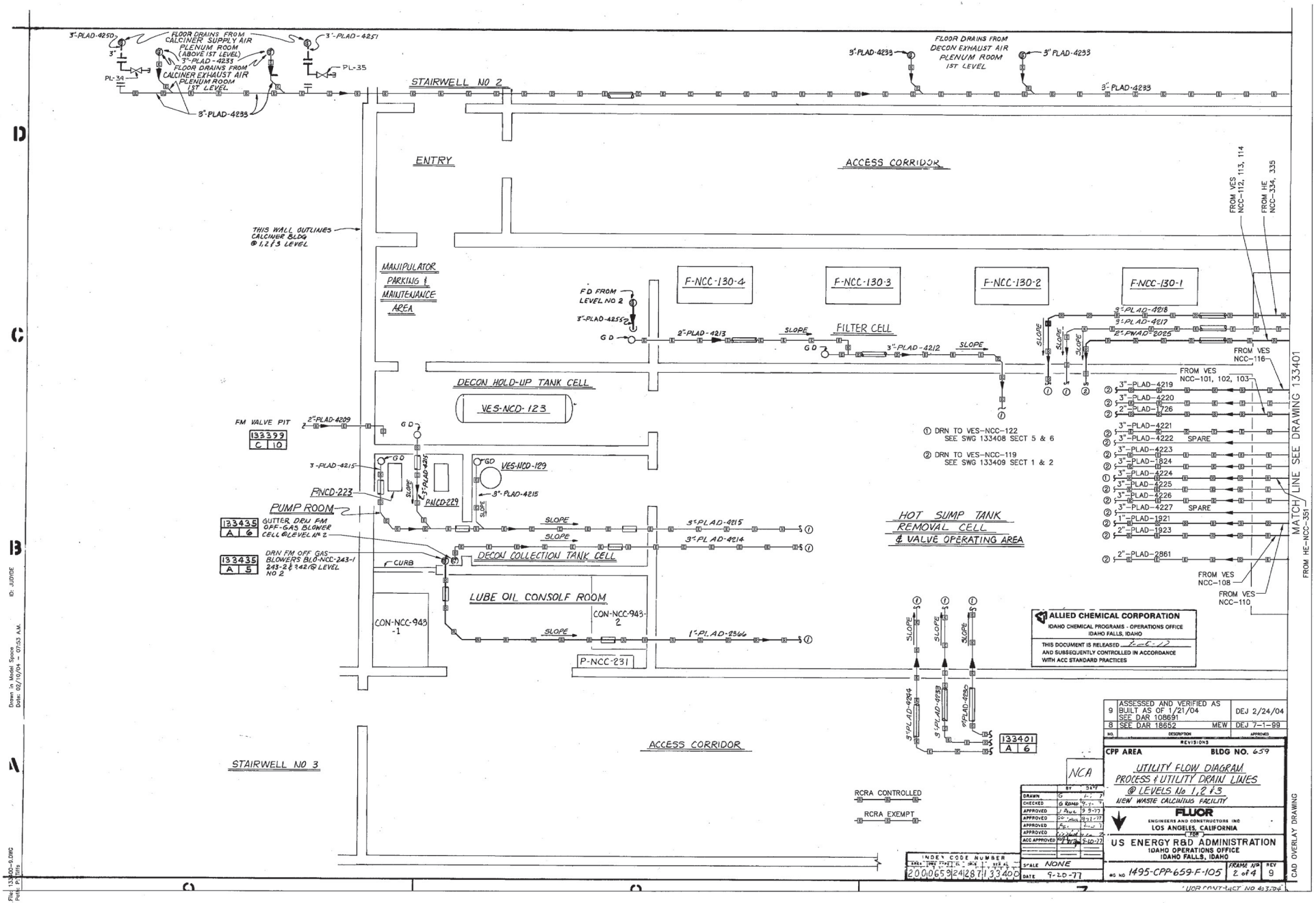
3"-PLAD-4250
FLOOR DRAINS FROM CALCINER SUPPLY AIR PLENUM ROOM (ABOVE 1ST LEVEL)
3"-PLAD-4233
FLOOR DRAINS FROM CALCINER EXHAUST AIR PLENUM ROOM 1ST LEVEL
3"-PLAD-4251
PL-34
PL-35
3"-PLAD-4233
STAIRWELL NO 2
FLOOR DRAINS FROM DECON EXHAUST AIR PLENUM ROOM 1ST LEVEL
ENTRY
ACCESS CORRIDOR
THIS WALL OUTLINES CALCINER BLDG @ 1,2 & 3 LEVEL
MANIPULATOR PARKING & MAINTENANCE AREA
F-NCC-130-4
F-NCC-130-3
F-NCC-130-2
F-NCC-130-1
FD FROM LEVEL NO 2
3"-PLAD-4255
GD
2"-PLAD-4213
SLOPE
FILTER CELL
3"-PLAD-4212
3"-PLAD-4218
3"-PLAD-4217
2"-PWAD-2025
FROM VES NCC-112, 113, 114
FROM HE NCC-334, 335
FROM VES NCC-116
FROM VES NCC-101, 102, 103
DECON HOLD-UP TANK CELL
VES-NCD-123
FM VALVE PIT
133399 C 10
2"-PLAD-4209
3"-PLAD-4215
VES-NCD-129
PNCD-223
PNCD-229
PUMP ROOM
133435 A 6
GUTTER DRN FM OFF-GAS BLOWER CELL @ LEVEL No 2
133435 A 5
DRN FM OFF GAS BLOWERS BLD-NCC-243-1 243-2 & 242 @ LEVEL NO 2
CURB
DECON COLLECTION TANK CELL
3"-PLAD-4215
3"-PLAD-4214
① DRN TO VES-NCC-122 SEE SWG 133408 SECT 5 & 6
② DRN TO VES-NCC-119 SEE SWG 133409 SECT 1 & 2
HOT SUMP TANK REMOVAL CELL & VALVE OPERATING AREA
3"-PLAD-4219
3"-PLAD-4220
2"-PLAD-1726
3"-PLAD-4221
3"-PLAD-4222 SPARE
3"-PLAD-4223
3"-PLAD-1824
3"-PLAD-4224
3"-PLAD-4225
3"-PLAD-4226
3"-PLAD-4227 SPARE
1"-PLAD-1921
2"-PLAD-1923
2"-PLAD-2861
FROM VES NCC-108
FROM VES NCC-110
MATCH LINE SEE DRAWING 133401
FROM HE-NCC-351
LUBE OIL CONSOLF ROOM
CON-NCC-943-1
CON-NCC-943-2
1"-PLAD-2566
P-NCC-231
3"-PLAD-9244
3"-PLAD-4233
9"PLAD-4182
133401 A 6
ACCESS CORRIDOR
STAIRWELL NO 3
RCRA CONTROLLED
RCRA EXEMPT
ALLIED CHEMICAL CORPORATION
IDAHO CHEMICAL PROGRAMS - OPERATIONS OFFICE
IDAHO FALLS, IDAHO
THIS DOCUMENT IS RELEASED 2-6-72 AND SUBSEQUENTLY CONTROLLED IN ACCORDANCE WITH ACC STANDARD PRACTICES
9 ASSESSED AND VERIFIED AS BUILT AS OF 1/21/04 SEE DAR 108691 DEJ 2/24/04
8 SEE DAR 18652 MEW DEJ 7-1-99
REVISIONS
CPP AREA BLDG NO. 659
UTILITY FLOW DIAGRAM PROCESS & UTILITY DRAIN LINES @ LEVELS No 1,2 & 3
NEW WASTE CALCINING FACILITY
FLUOR
ENGINEERS AND CONSTRUCTORS INC
LOS ANGELES, CALIFORNIA
US ENERGY R&D ADMINISTRATION
IDAHO OPERATIONS OFFICE
IDAHO FALLS, IDAHO
NCA
SCALE NONE
DATE 9-20-77
DRG NO 1495-CPP-659-F-105
FRAME NO 2 of 4
REV 9
INDEX CODE NUMBER
200065924287133400
CAD OVERLAY DRAWING
UOR CONTRACT NO 423204
ID: JUDYDE
Drawn in Model Space
Date: 02/10/04 - 07:53 A.M.
File: 133400-9.DWG
Path: P:\Plts

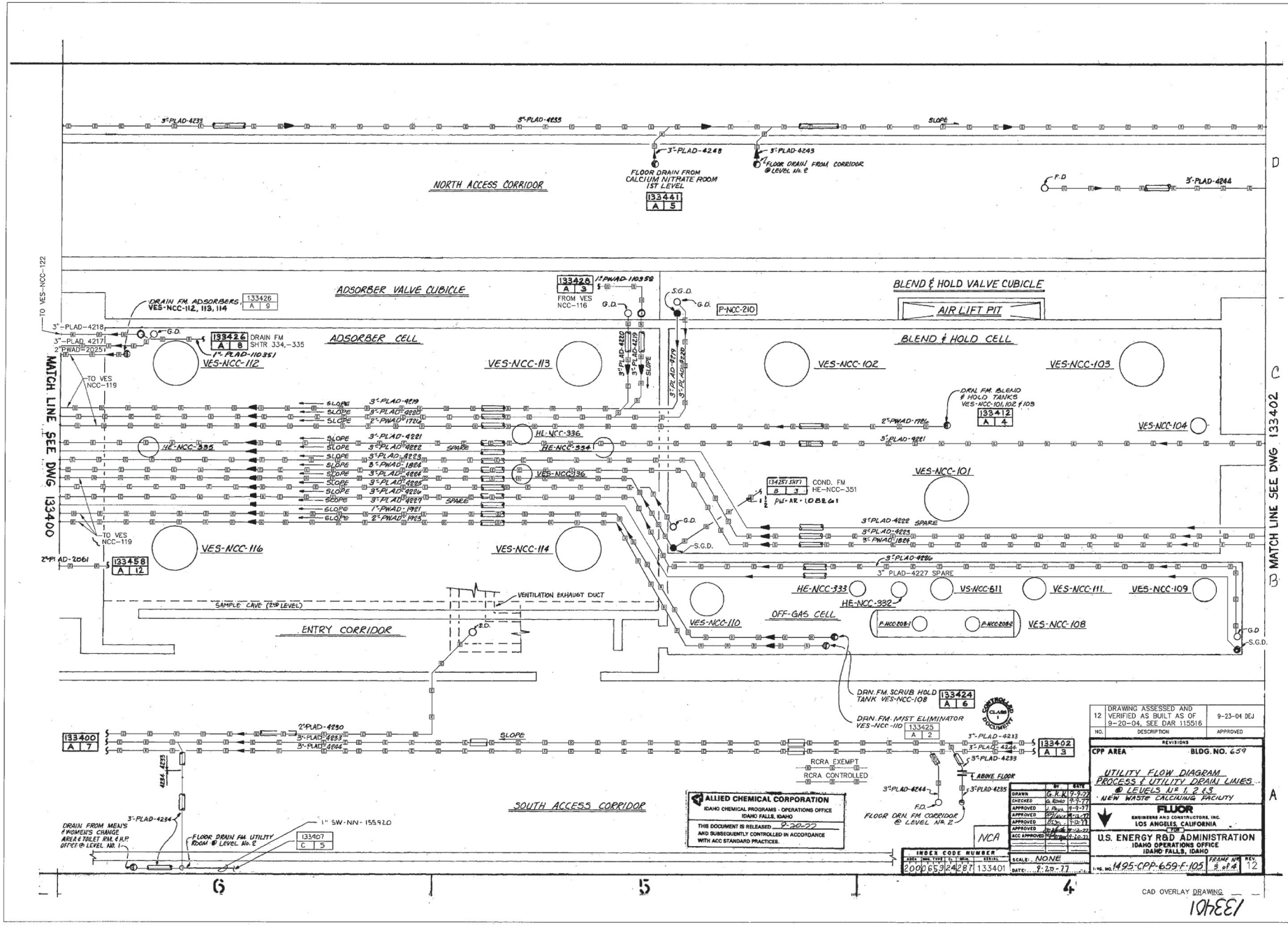
NORTH ACCESS CORRIDOR
ADSORBER VALVE CUBICLE
ADSORBER CELL
BLEND & HOLD VALVE CUBICLE
AIR LIFT PIT
BLEND & HOLD CELL
ENTRY CORRIDOR
SAMPLE CAVE (2ND LEVEL)
OFF-GAS CELL
SOUTH ACCESS CORRIDOR
VENTILATION EXHAUST DUCT
FLOOR DRAIN FROM CALCIUM NITRATE ROOM 1ST LEVEL
FLOOR DRAIN FROM CORRIDOR @ LEVEL No. 2
DRAIN FM. ADSORBERS VES-NCC-112, 113, 114
DRAIN FM SHTR 334,-335
FROM VES NCC-116
DRAIN FM BLEND & HOLD TANKS VES-NCC-101,102 & 103
COND. FM HE-NCC-351
DRN. FM. SCRUB HOLD TANK VES-NCC-108
DRN. FM. MIST ELIMINATOR VES-NCC-110
FLOOR DRN. FM CORRIDOR @ LEVEL No. 2
DRAIN FROM MEN'S & WOMEN'S CHANGE AREA & TOILET RM. & H.P. OFFICE @ LEVEL No. 1
FLOOR DRAIN FM. UTILITY ROOM @ LEVEL No. 2
RCRA EXEMPT
RCRA CONTROLLED
ABOVE FLOOR
VES-NCC-112
VES-NCC-113
VES-NCC-102
VES-NCC-103
VES-NCC-104
VES-NCC-101
VES-NCC-116
VES-NCC-114
VES-NCC-110
VES-NCC-108
VES-NCC-109
VES-NCC-111
VS-NCC-611
HE-NCC-335
HE-NCC-336
HE-NCC-334
HE-NCC-333
HE-NCC-332
P-NCC-210
P-NCC-208-1
P-NCC-208-2
TO VES-NCC-122
MATCH LINE SEE DWG 133400
MATCH LINE SEE DWG 133402
ALLIED CHEMICAL CORPORATION
IDAHO CHEMICAL PROGRAMS - OPERATIONS OFFICE
IDAHO FALLS, IDAHO
THIS DOCUMENT IS RELEASED 9-20-77
AND SUBSEQUENTLY CONTROLLED IN ACCORDANCE WITH ACC STANDARD PRACTICES.
CONTROLLED DOCUMENT CLASS I
NCA
INDEX CODE NUMBER
AREA SYS TYPE SQ SEQ. SERIAL
2000 659 24287 133401
SCALE: NONE
DATE: 9-20-77
12 DRAWING ASSESSED AND VERIFIED AS BUILT AS OF 9-20-04, SEE DAR 115516 9-23-04 DEJ
NO. DESCRIPTION APPROVED
REVISIONS
CPP AREA BLDG. NO. 659
UTILITY FLOW DIAGRAM
PROCESS & UTILITY DRAIN LINES
@ LEVELS UP 1, 2 & 3
NEW WASTE CALCINING FACILITY
FLUOR
ENGINEERS AND CONSTRUCTORS, INC.
LOS ANGELES, CALIFORNIA
U.S. ENERGY R&D ADMINISTRATION
IDAHO OPERATIONS OFFICE
IDAHO FALLS, IDAHO
DRAWN G.K.K. 9-9-77
CHECKED G. Kovac 9-9-77
APPROVED 9-9-77
APPROVED 9-9-77
APPROVED 9-9-77
APPROVED 9-20-77
ACC APPROVED 9-16-77
LTR. NO. 1495-CPP-659-F-105
FRAME NO. 3 of 4
REV. 12
CAD OVERLAY DRAWING
133401

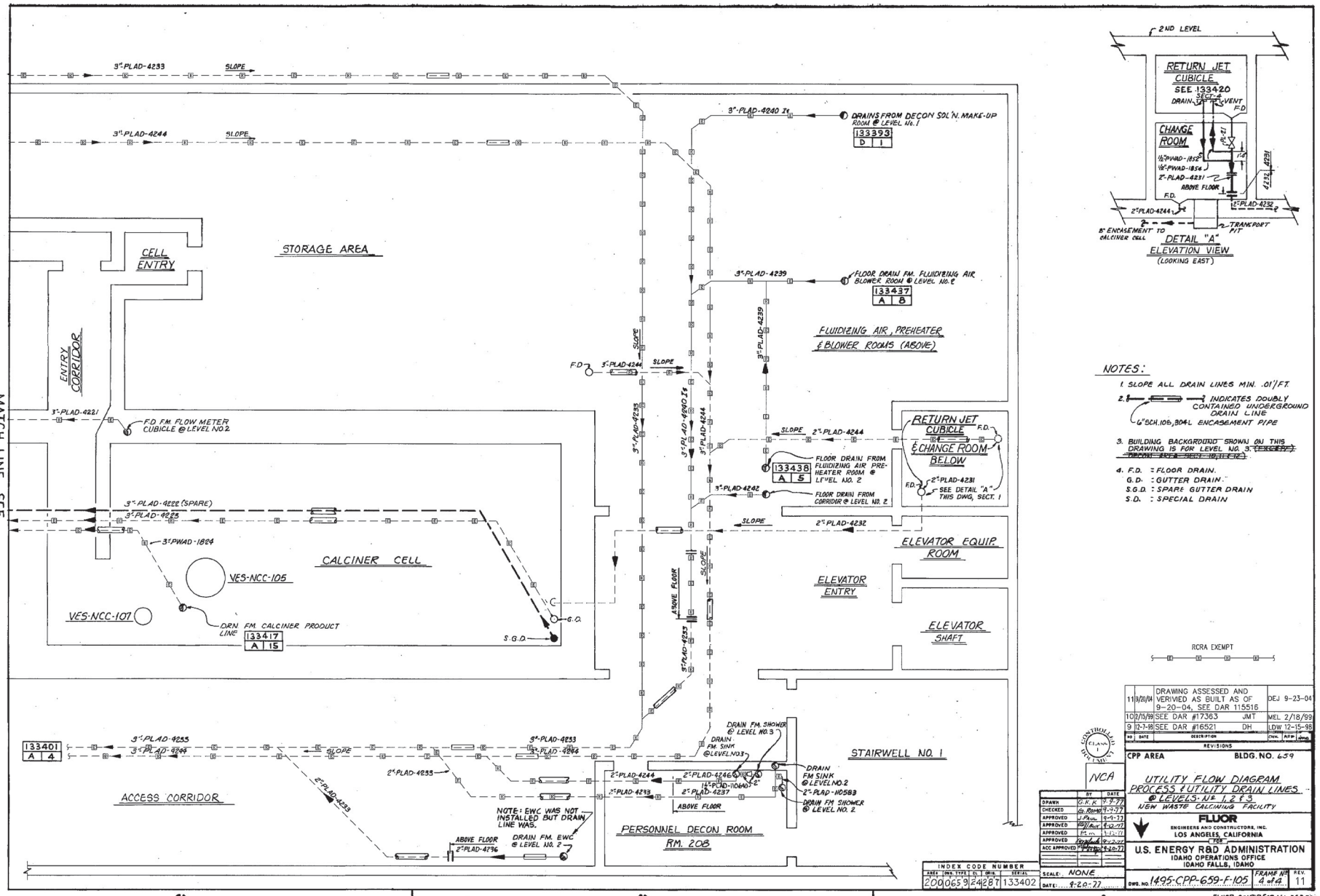
STORAGE AREA
CELL ENTRY
ENTRY CORRIDOR
CALCINER CELL
VES-NCC-105
VES-NCC-107
ACCESS CORRIDOR
PERSONNEL DECON ROOM RM. 208
STAIRWELL NO. 1
ELEVATOR EQUIP. ROOM
ELEVATOR ENTRY
ELEVATOR SHAFT
FLUIDIZING AIR, PREHEATER & BLOWER ROOMS (ABOVE)
RETURN JET CUBICLE & CHANGE ROOM BELOW
MATCH LINE SEE DWG 133401
3"-PLAD-4233
3"-PLAD-4244
SLOPE
3"-PLAD-4240 I.E.
DRAINS FROM DECON SOL'N. MAKE-UP ROOM @ LEVEL No. 1
133393 D 1
3"-PLAD-4239
FLOOR DRAIN FM. FLUIDIZING AIR BLOWER ROOM @ LEVEL NO. 2
133437 A 8
3"-PLAD-4221
F.D. FM. FLOW METER CUBICLE @ LEVEL NO. 2
3"-PLAD-4222 (SPARE)
3"-PLAD-4223
3"-PWAD-1824
DRN. FM. CALCINER PRODUCT LINE
133417 A 15
S.G.D.
G.D.
FLOOR DRAIN FROM FLUIDIZING AIR PRE-HEATER ROOM @ LEVEL NO. 2
133438 A 5
3"-PLAD-4242
FLOOR DRAIN FROM CORRIDOR @ LEVEL NO. 2
2"-PLAD-4244
2"-PLAD-4231
SEE DETAIL "A" THIS DWG, SECT. 1
2"-PLAD-4232
ABOVE FLOOR
133401 A 4
2"-PLAD-4233
2"-PLAD-4246
2"-PLAD-4237
DRAIN FM. SHOWER @ LEVEL NO. 3
DRAIN FM. SINK @ LEVEL NO. 3
DRAIN FM SINK @ LEVEL NO. 2
2"-PLAD-1058 3
DRAIN FM SHOWER @ LEVEL NO. 2
NOTE: EWC WAS NOT INSTALLED BUT DRAIN LINE WAS.
2"-PLAD-4236
DRAIN FM. EWC @ LEVEL NO. 2
2ND LEVEL
RETURN JET CUBICLE
SEE 133420 SECT. 4
DRAIN
VENT
F.D.
CHANGE ROOM
1½"PWAD-1858
1½"PWAD-1854
2"-PLAD-4231
ABOVE FLOOR
2"PLAD-4244
2"PLAD-4232
8" ENCASEMENT TO CALCINER CELL
TRANSPORT PIT
DETAIL "A"
ELEVATION VIEW
(LOOKING EAST)
NOTES:
1. SLOPE ALL DRAIN LINES MIN. .01'/FT.
2. INDICATES DOUBLY CONTAINED UNDERGROUND DRAIN LINE
6" SCH. 105, 304L ENCASEMENT PIPE
3. BUILDING BACKGROUND SHOWN ON THIS DRAWING IS FOR LEVEL NO. 3.
4. F.D. : FLOOR DRAIN.
G.D. : GUTTER DRAIN.
S.G.D. : SPARE GUTTER DRAIN
S.D. : SPECIAL DRAIN
RCRA EXEMPT
INDEX CODE NUMBER
AREA 200 DRL TYP 065 DL 9 DRN 24287 SERIAL 133402
SCALE: NONE
DATE: 9-20-77
NCA
DRAWN D.K.K. 9-7-77
CHECKED G. Bishop 9-7-77
APPROVED J. Pace 9-9-77
APPROVED 9-12-77
APPROVED 9-20-77
APPROVED 9-20-77
ACC APPROVED 9-20-77
11 9/20/04 DRAWING ASSESSED AND VERIFIED AS BUILT AS OF 9-20-04, SEE DAR 115516 DEJ 9-23-04
10 2/15/99 SEE DAR #17363 JMT MEL 2/18/99
9 12-7-98 SEE DAR #16521 DH LDW 12-15-98
NO. DATE DESCRIPTION CHKD. APP'D
REVISIONS
CPP AREA
BLDG. NO. 659
UTILITY FLOW DIAGRAM
PROCESS & UTILITY DRAIN LINES
@ LEVELS NO. 1, 2 & 3
NEW WASTE CALCINING FACILITY
FLUOR
ENGINEERS AND CONSTRUCTORS, INC.
LOS ANGELES, CALIFORNIA
U.S. ENERGY R&D ADMINISTRATION
IDAHO OPERATIONS OFFICE
IDAHO FALLS, IDAHO
DWG. NO. 1495-CPP-659-F-105
FRAME NO. 4 of 4
REV. 11
FLUOR CONTRACT NO 953-C04

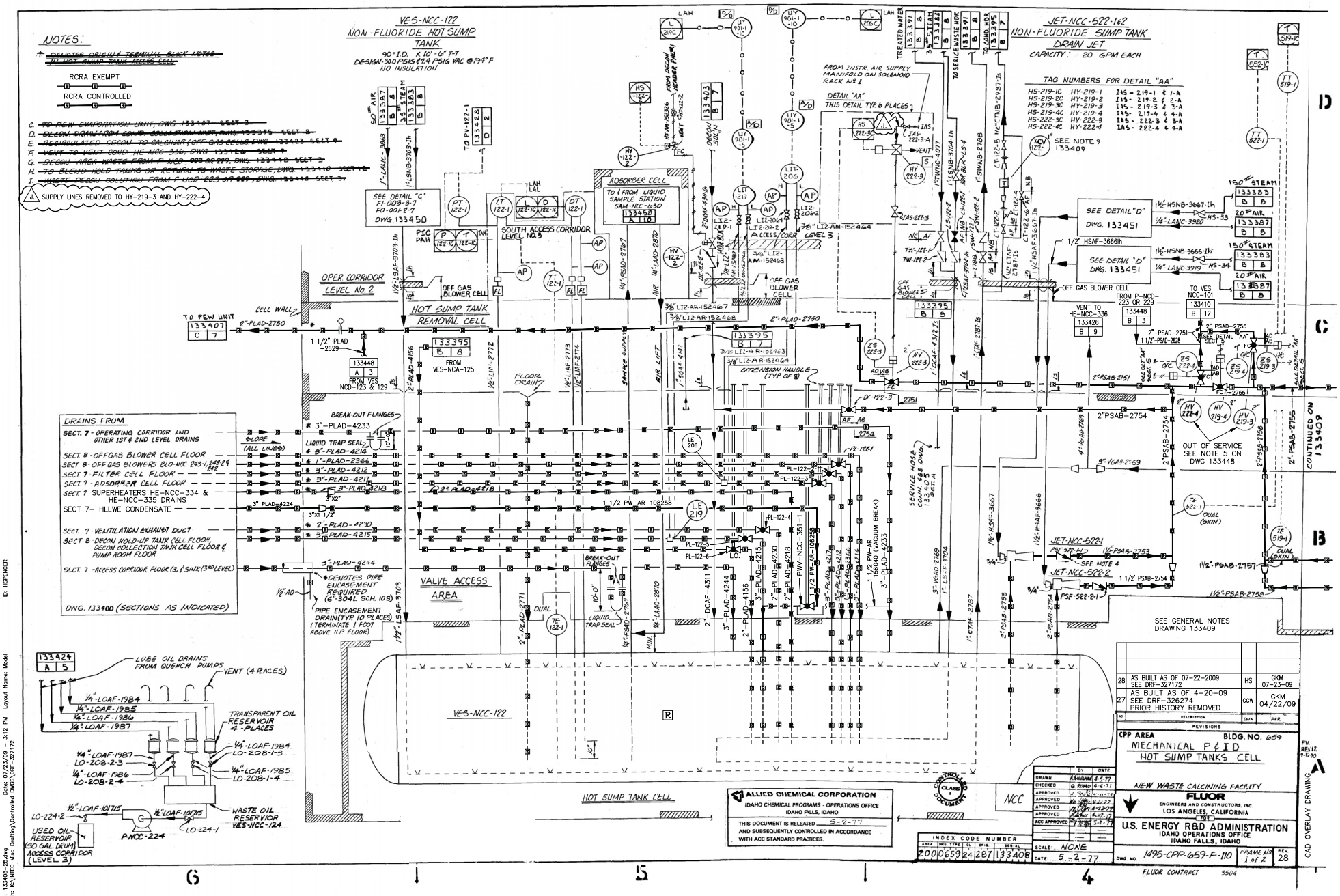

Date: 07/23/09 – 3:12 PM Layout Name: Model
File: 133408-28.dwg
Path: K:\NTEC Misc Drafting\Controlled DWGS\DRF-327172
ID: HSPENCER

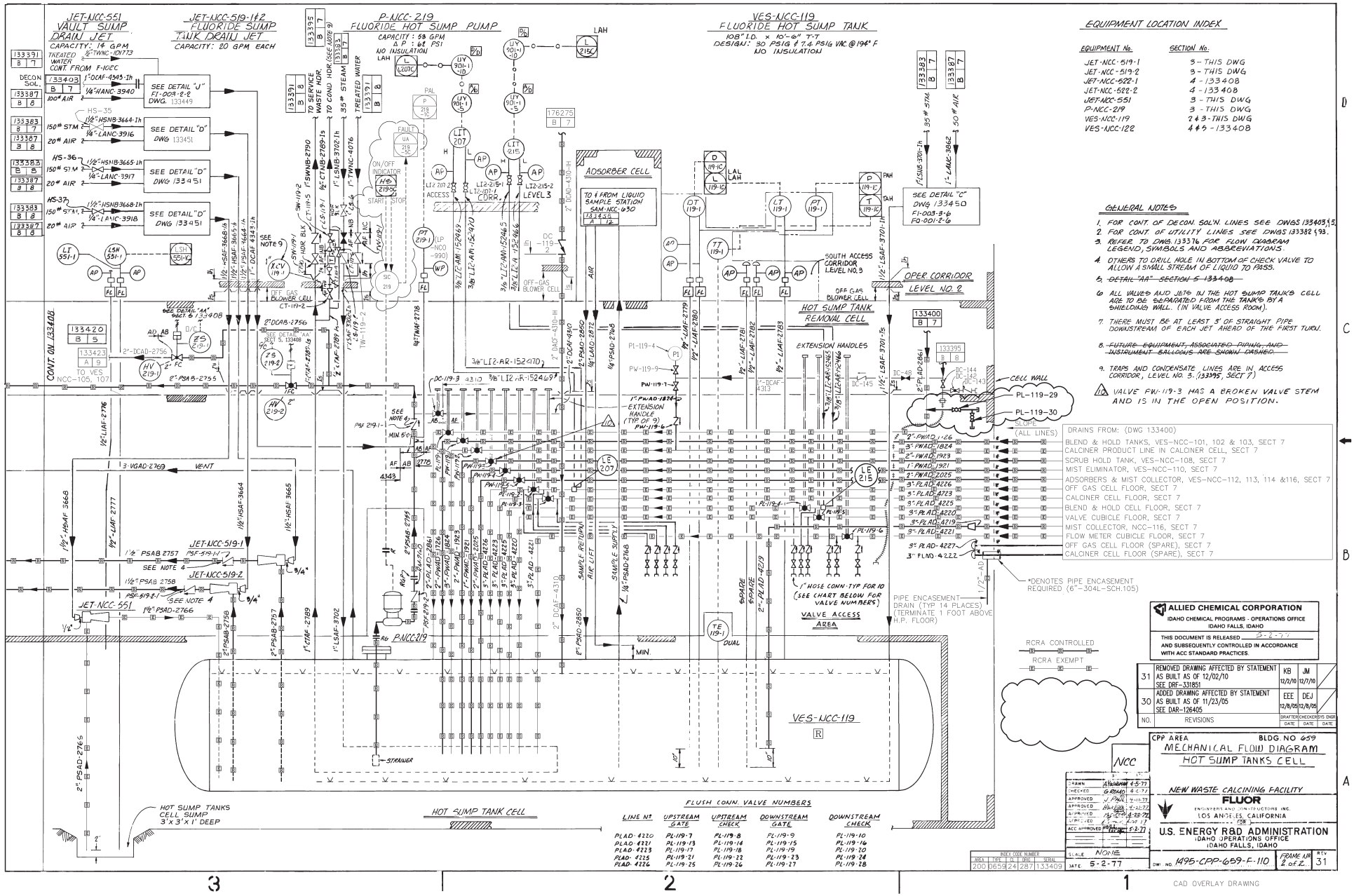

EQUIPMENT LOCATION INDEX

EQUIPMENT No.	SECTION No.
JET-NCC-519-1	3 - THIS DWG
JET-NCC-519-2	3 - THIS DWG
JET-NCC-522-1	4 - 133408
JET-NCC-522-2	4 - 133408
JET-NCC-551	3 - THIS DWG
P-NCC-219	3 - THIS DWG
VES-NCC-119	2 & 3 - THIS DWG
VES-NCC-122	4 & 5 - 133408

GENERAL NOTES

1. FOR CONT. OF DECON. SOL'N. LINES SEE DWGS 133403 & 5.
2. FOR CONT. OF UTILITY LINES SEE DWGS 133382 & 93.
3. REFER TO DWG. 133376 FOR FLOW DIAGRAM LEGEND, SYMBOLS AND ABBREVIATIONS.
4. OTHERS TO DRILL HOLE IN BOTTOM OF CHECK VALVE TO ALLOW A SMALL STREAM OF LIQUID TO PASS.
5. ~~DETAIL "AA" SECTION 5 133408~~
6. ALL VALVES AND JETS IN THE HOT SUMP TANKS CELL ARE TO BE SEPARATED FROM THE TANKS BY A SHIELDING WALL. (IN VALVE ACCESS ROOM).
7. THERE MUST BE AT LEAST 3' OF STRAIGHT PIPE DOWNSTREAM OF EACH JET AHEAD OF THE FIRST TURN.
8. ~~FUTURE EQUIPMENT, ASSOCIATED PIPING, AND INSTRUMENT BALLOONS ARE SHOWN DASHED.~~
9. TRAPS AND CONDENSATE LINES ARE IN ACCESS CORRIDOR, LEVEL NO. 3. (133395, SECT 7)

⚠ VALVE FW-119-3 HAS A BROKEN VALVE STEM AND IS IN THE OPEN POSITION.

FLUSH CONN. VALVE NUMBERS

LINE Nº	UPSTREAM GATE	UPSTREAM CHECK	DOWNSTREAM GATE	DOWNSTREAM CHECK
PLAD-4220	PL-119-7	PL-119-8	PL-119-9	PL-119-10
PLAD-4221	PL-119-13	PL-119-14	PL-119-15	PL-119-16
PLAD-4223	PL-119-17	PL-119-18	PL-119-19	PL-119-20
PLAD-4225	PL-119-21	PL-119-22	PL-119-23	PL-119-24
PLAD-4226	PL-119-25	PL-119-26	PL-119-27	PL-119-28

ALLIED CHEMICAL CORPORATION
IDAHO CHEMICAL PROGRAMS - OPERATIONS OFFICE
IDAHO FALLS, IDAHO

THIS DOCUMENT IS RELEASED 3-2-77 AND SUBSEQUENTLY CONTROLLED IN ACCORDANCE WITH ACC STANDARD PRACTICES.

NO.	REVISIONS	DRAFTER DATE	CHECKER DATE	BYS ENGR DATE
31	REMOVED DRAWING AFFECTED BY STATEMENT AS BUILT AS OF 12/02/10 SEE DRF-331851	KB 12/2/10	JM 12/7/10	
30	ADDED DRAWING AFFECTED BY STATEMENT AS BUILT AS OF 11/23/05 SEE DAR-126405	EEE 12/8/05	DEJ 12/8/05	

DRAWN	A. Vandham	4-5-77
CHECKED	G. Grant	4-6-77
APPROVED	J. Paul	4-11-77
APPROVED	H. Lee	4-21-77
APPROVED	[illegible]	4-28-77
APPROVED	[illegible]	4-28-77
ACC APPROVED	[illegible]	5-2-77

SCALE NONE
DATE 5-2-77

INDEX CODE NUMBER: AREA 200 TYPE 06 SYS 59 DWG 24 SEQ 287 133409

CPP AREA — BLDG. NO 659

MECHANICAL FLOW DIAGRAM
HOT SUMP TANKS CELL

NEW WASTE CALCINING FACILITY
FLUOR
ENGINEERS AND CONSTRUCTORS INC.
LOS ANGELES, CALIFORNIA
FOR
U.S. ENERGY R&D ADMINISTRATION
IDAHO OPERATIONS OFFICE
IDAHO FALLS, IDAHO

DWG. NO. 1495-CPP-659-F-110 — FRAME NO. 2 of 2 — REV. 31

File: 133409-31.dwg
Path: K:\NEW\Misc Drafting\Controlled DWGS\DRF-331851
Date: 12/08/10 — 8:12 AM — Layout Name: Model — ID: KBR

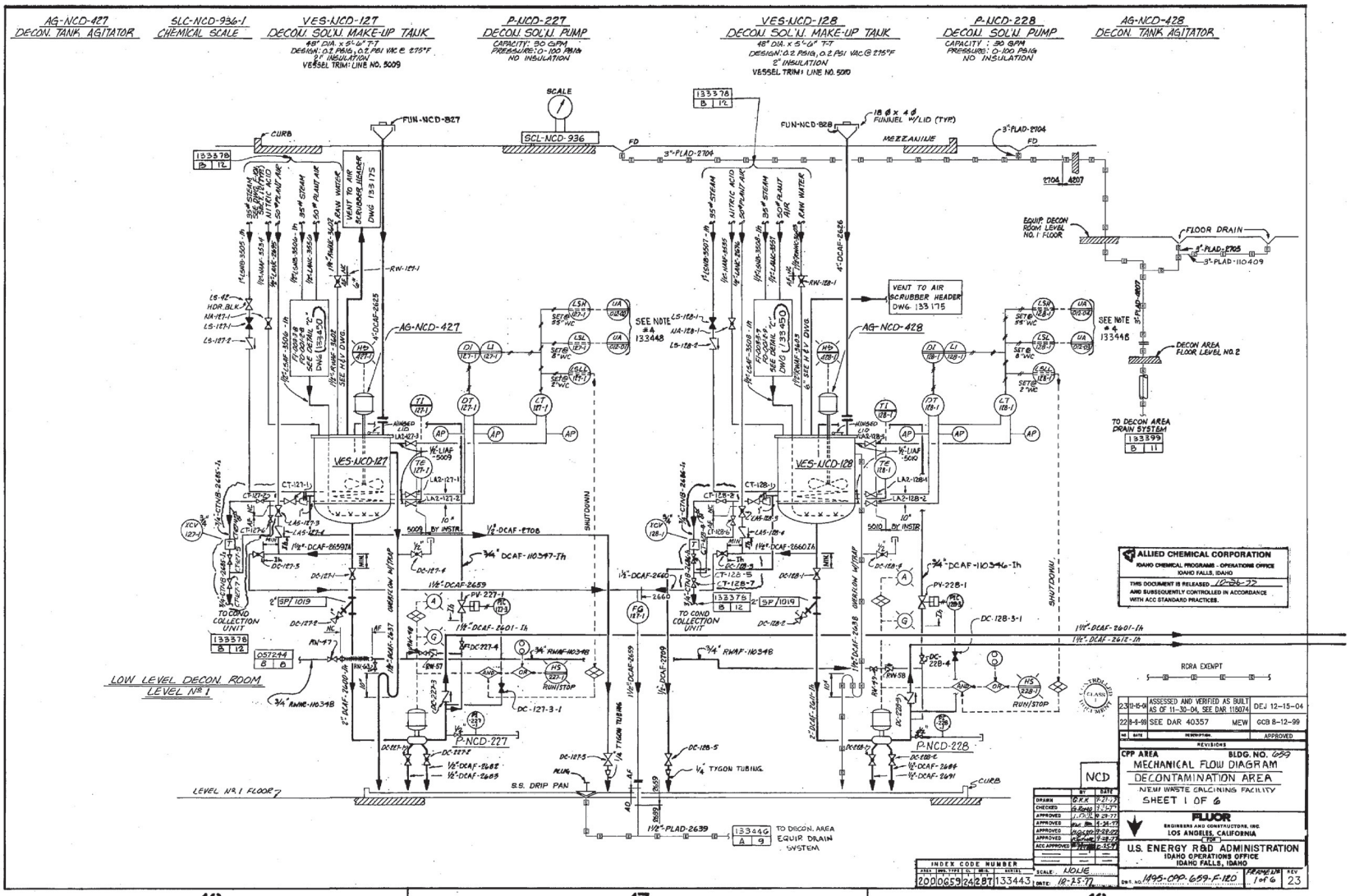
AG-NCD-427
DECON. TANK AGITATOR
SLC-NCD-936-1
CHEMICAL SCALE
VES-NCD-127
DECON. SOL'N. MAKE-UP TANK
48" DIA. x 5'-6" T-T
DESIGN: 0.2 PSIG, 0.2 PSI VAC. @ 275°F
2" INSULATION
VESSEL TRIM: LINE NO. 5009
P-NCD-227
DECON. SOL'N. PUMP
CAPACITY: 30 GPM
PRESSURE: 0-100 PSIG
NO INSULATION
VES-NCD-128
DECON. SOL'N. MAKE-UP TANK
48" DIA. x 5'-6" T-T
DESIGN: 0.2 PSIG, 0.2 PSI VAC. @ 275°F
2" INSULATION
VESSEL TRIM: LINE NO. 5010
P-NCD-228
DECON. SOL'N. PUMP
CAPACITY: 30 GPM
PRESSURE: 0-100 PSIG
NO INSULATION
AG-NCD-428
DECON. TANK AGITATOR
SCALE
SCL-NCD-936
FUN-NCD-827
FUN-NCD-828
MEZZANINE
CURB
FD
3"-PLAD-2704
VENT TO AIR SCRUBBER HEADER DWG 133175
EQUIP. DECON ROOM LEVEL NO. 1 FLOOR
FLOOR DRAIN
3"-PLAD-2705
3"-PLAD-110409
DECON AREA FLOOR LEVEL NO. 2
TO DECON AREA DRAIN SYSTEM
SEE NOTE #4 133448
AG-NCD-427
AG-NCD-428
VES-NCD-127
VES-NCD-128
SHUTDOWN
OVERFLOW WITRAP
TO CONDO COLLECTION UNIT
P-NCD-227
P-NCD-228
S.S. DRIP PAN
LEVEL No. 1 FLOOR
LOW LEVEL DECON. ROOM LEVEL No. 1
TO DECON. AREA EQUIP. DRAIN SYSTEM
RORA EXEMPT
ALLIED CHEMICAL CORPORATION
IDAHO CHEMICAL PROGRAMS - OPERATIONS OFFICE
IDAHO FALLS, IDAHO
THIS DOCUMENT IS RELEASED 10-26-22
AND SUBSEQUENTLY CONTROLLED IN ACCORDANCE WITH ACC STANDARD PRACTICES.
CPP AREA
BLDG. NO. 659
MECHANICAL FLOW DIAGRAM
DECONTAMINATION AREA
NEW WASTE CALCINING FACILITY
SHEET 1 OF 6
FLUOR
ENGINEERS AND CONSTRUCTORS, INC.
LOS ANGELES, CALIFORNIA
U.S. ENERGY R&D ADMINISTRATION
IDAHO OPERATIONS OFFICE
IDAHO FALLS, IDAHO
NCD
SCALE: NONE
DATE: 12-15-77
DWG. NO. 1495-CPP-659-F-120
FRAME 1/R 1 of 6
REV 23
ASSESSED AND VERIFIED AS BUILT AS OF 11-30-04, SEE DAR 118074
SEE DAR 40357
APPROVED
REVISIONS
INDEX CODE NUMBER
20010659 242BT 133443
User: MINHELLE
Date: 08/12/99 - 11:45 A.M.

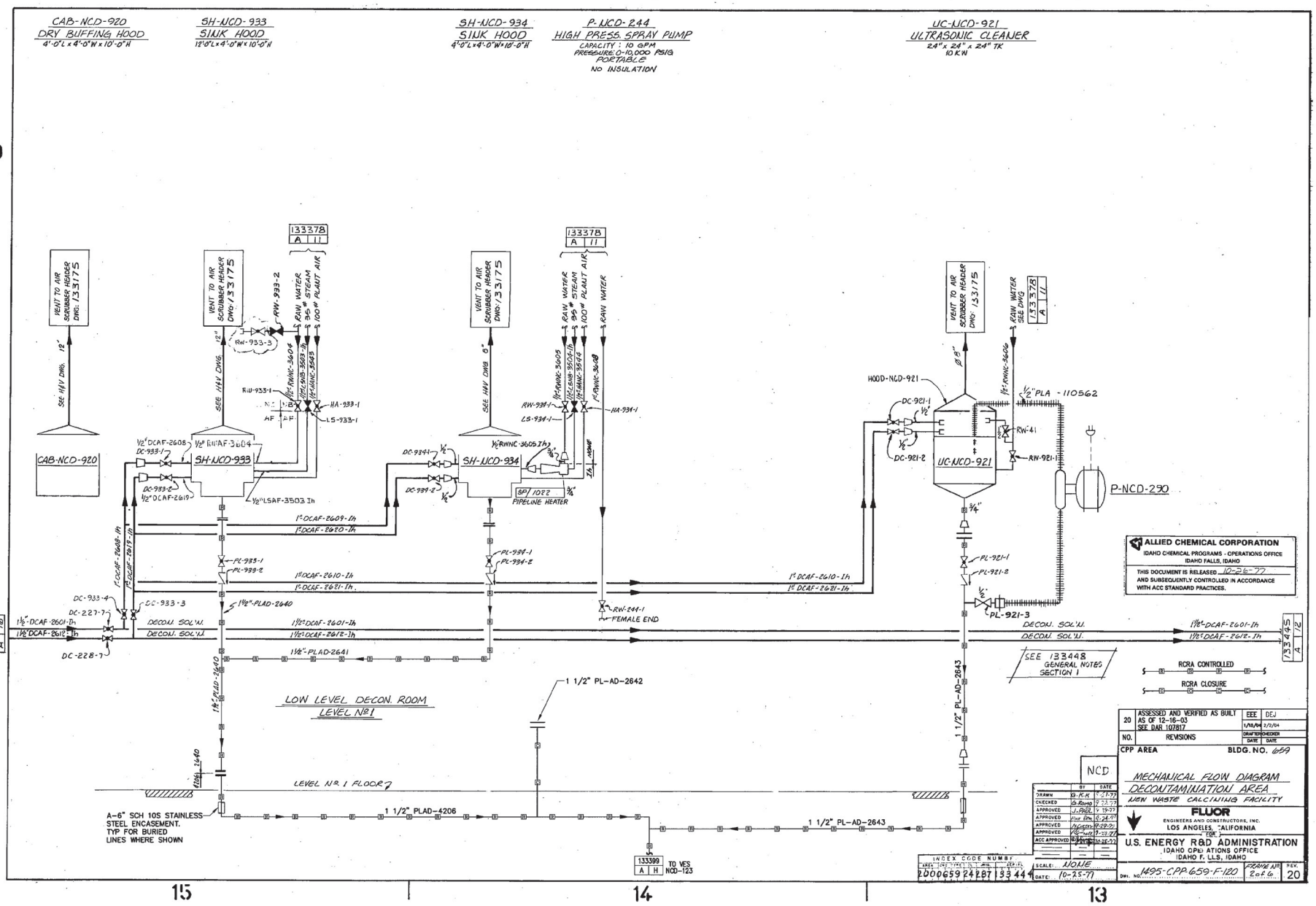
CAB-NCD-920
DRY BUFFING HOOD
4'-0"L x 4'-0"W x 10'-0"H
SH-NCD-933
SINK HOOD
12'-0"L x 4'-0"W x 10'-0"H
SH-NCD-934
SINK HOOD
4'-0"L x 4'-0"W x 10'-0"H
P-NCD-244
HIGH PRESS. SPRAY PUMP
CAPACITY: 10 GPM
PRESSURE: 0-10,000 PSIG
PORTABLE
NO INSULATION
UC-NCD-921
ULTRASONIC CLEANER
24" x 24" x 24" TK
10 KW
VENT TO AIR SCRUBBER HEADER DWG: 133175
RAW WATER
95# STEAM
100# PLANT AIR
RAW WATER SEE DWG 133378 A 11
133378 A 11
SEE HVV DWG.
HOOD-NCD-921
½" PLA - 110562
P-NCD-290
CAB-NCD-920
SH-NCD-933
SH-NCD-934
UC-NCD-921
FIPELINE HEATER
FEMALE END
DECON. SOL'N.
LOW LEVEL DECON. ROOM
LEVEL Nº1
LEVEL Nº 1 FLOOR
1 1/2" PL-AD-2642
1 1/2" PL-AD-2643
1 1/2" PLAD-4206
A-6" SCH 10S STAINLESS STEEL ENCASEMENT. TYP FOR BURIED LINES WHERE SHOWN
133399 A H TO VES NCD-123
133445 A 16
133445 A 12
SEE 133448 GENERAL NOTES SECTION 1
RCRA CONTROLLED
RCRA CLOSURE
ALLIED CHEMICAL CORPORATION
IDAHO CHEMICAL PROGRAMS - OPERATIONS OFFICE
IDAHO FALLS, IDAHO
THIS DOCUMENT IS RELEASED 10-26-77
AND SUBSEQUENTLY CONTROLLED IN ACCORDANCE WITH ACC STANDARD PRACTICES.
20 ASSESSED AND VERIFIED AS BUILT AS OF 12-16-03 SEE DAR 107817
NO. REVISIONS
CPP AREA
BLDG. NO. 659
MECHANICAL FLOW DIAGRAM
DECONTAMINATION AREA
NEW WASTE CALCINING FACILITY
FLUOR
ENGINEERS AND CONSTRUCTORS, INC.
LOS ANGELES, CALIFORNIA
U.S. ENERGY R&D ADMINISTRATION
IDAHO OPERATIONS OFFICE
IDAHO FALLS, IDAHO
SCALE: NONE
DATE: 10-25-77
1495-CPP-659-F-120
REV. 20
133444

FMT-01-REV 2

REVISIONS		
REV	DESCRIPTION	EFFECTIVE DATE:
22	AS-BUILT AS OF 9/15/2003 SEE DAR 103775	9/22/2003
23	AS-BUILT AS OF 3-2-05 SEE DAR 120814	3-10-05 DEJ

VES-NCD-138 PORTABLE SOAK TANK

48" DIA X 5'-0"
VESSEL DESIGN: 0.2 PSIG, 0.2 PSI VAC @ 275° F
JACKET DESIGN: 50 PSIG @ 360° F
JACKETED W/3" INSULATION
VESSEL TRIM: LN #5040

VES-NCD-139 PORTABLE SOAK TANK

24" DIA X 5'-0"
VESSEL DESIGN: 0.2 PSIG, 0.2 PSI VAC @ 275° F
JACKET DESIGN: 50 PSIG @ 360° F
JACKETED W/2" INSULATION
VESSEL TRIM: LN #5039

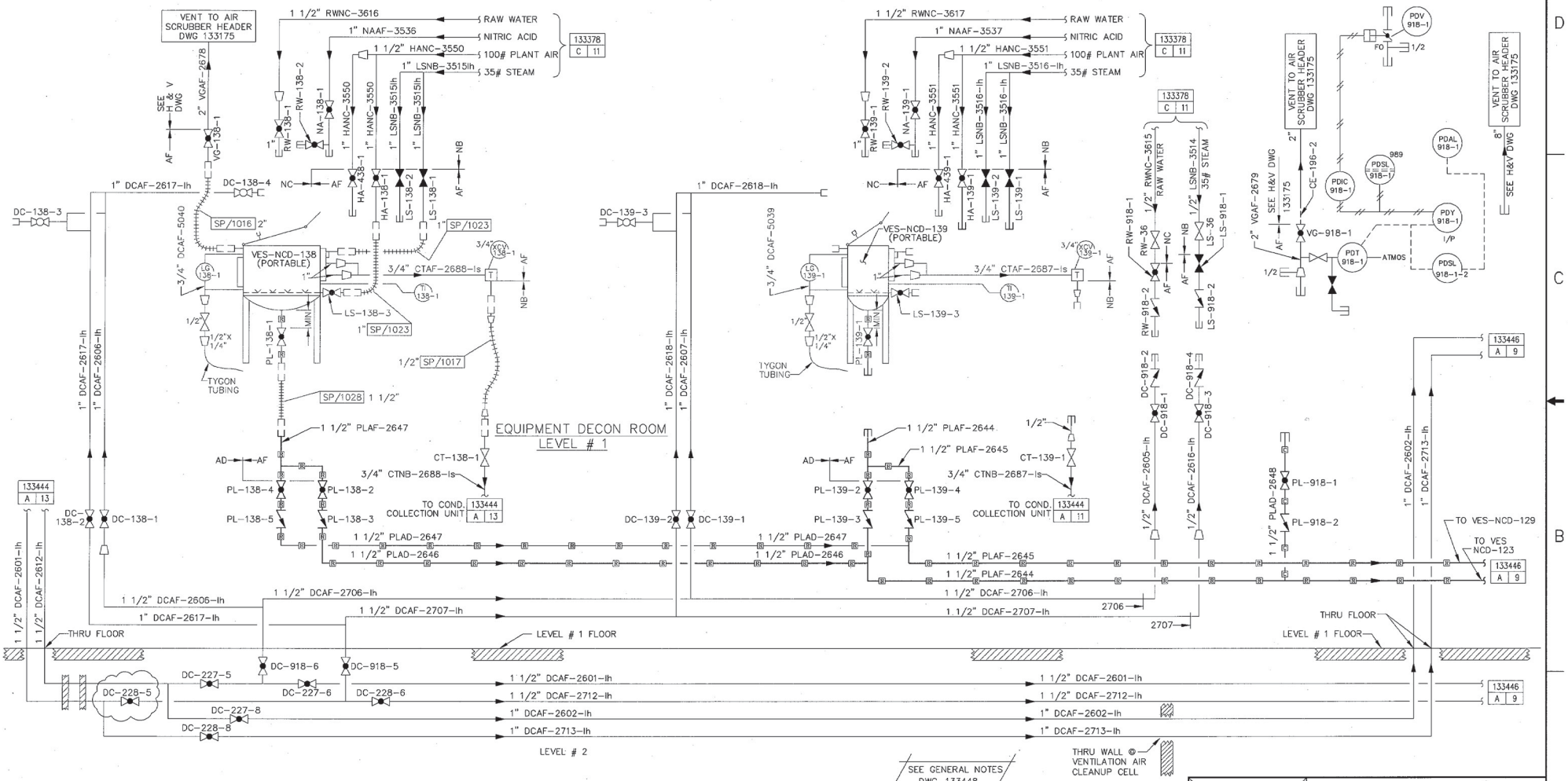

NOTE:
ALL PIPELINE NUMBERS ON THIS DWG ARE PRECEDED BY 10.
SIZE-XX-XX-10XXXX

SUBCONTRACT NO.	LOCKHEED MARTIN
REQUESTER:	CPP AREA — BLDG NO. 659
DESIGN:	MECHANICAL FLOW DIAGRAM
DRAWN:	DECONTAMINATION AREA
PROJECT NO.	NEW WASTE CALCINING FACILITY
SPEC CODE	PEWE
FOR REVIEW/APPROVAL SIGNATURES SEE DWG NO. 18668	SIZE D — CAGE CODE 01MF3 — INDEX CODE NUMBERS AREA 200 TYPE 0659 SI 24 SEQ 267 — DWG-133445 — REV 23
EFFECTIVE DATE:	SCALE: NONE — NCD — SHEET

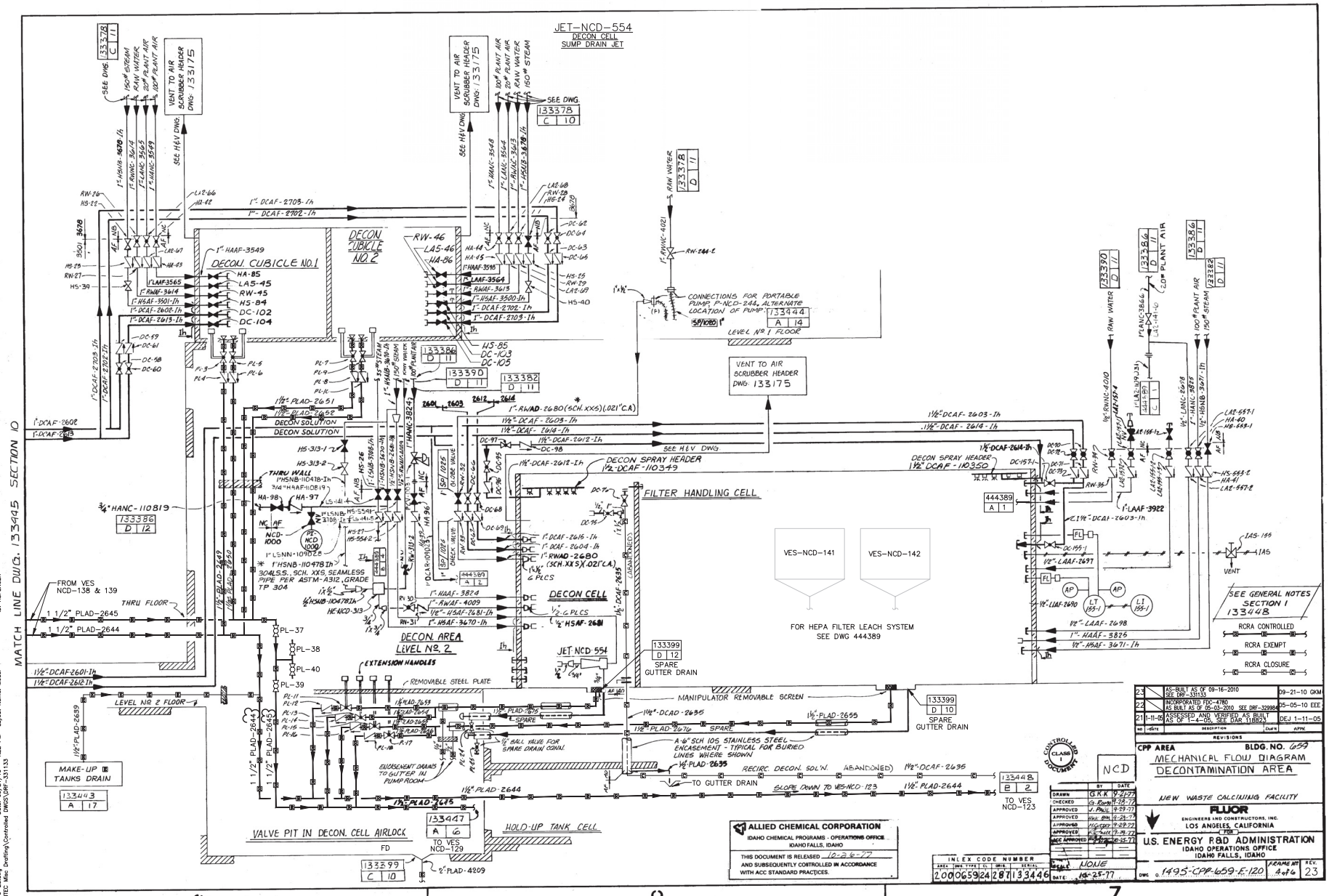
JET-NCD-554
DECON CELL
SUMP DRAIN JET
DECON. CUBICLE NO.1
DECON CUBICLE NO.2
DECON. AREA
LEVEL NO. 2
DECON CELL
FILTER HANDLING CELL
VALVE PIT IN DECON. CELL AIRLOCK
HOLD-UP TANK CELL
MATCH LINE DWG. 133495 SECTION 10
VENT TO AIR SCRUBBER HEADER DWG. 133175
CONNECTIONS FOR PORTABLE PUMP, P-NCD-244, ALTERNATE LOCATION OF PUMP
VES-NCD-141
VES-NCD-142
FOR HEPA FILTER LEACH SYSTEM SEE DWG 444389
SEE GENERAL NOTES SECTION I 133448
RCRA CONTROLLED
RCRA EXEMPT
RCRA CLOSURE
MAKE-UP & TANKS DRAIN
SPARE GUTTER DRAIN
TO VES NCD-123
TO VES NCD-129
TO GUTTER DRAIN
MANIPULATOR REMOVABLE SCREEN
REMOVABLE STEEL PLATE
EXTENSION HANDLES
FROM VES NCD-138 & 139
THRU FLOOR
LEVEL NO 2 FLOOR
LEVEL NO. 1 FLOOR
ALLIED CHEMICAL CORPORATION
IDAHO CHEMICAL PROGRAMS - OPERATIONS OFFICE
IDAHO FALLS, IDAHO
THIS DOCUMENT IS RELEASED AND SUBSEQUENTLY CONTROLLED IN ACCORDANCE WITH ACC STANDARD PRACTICES.
CPP AREA
BLDG. NO. 659
MECHANICAL FLOW DIAGRAM
DECONTAMINATION AREA
NEW WASTE CALCINING FACILITY
FLUOR
ENGINEERS AND CONSTRUCTORS, INC.
LOS ANGELES, CALIFORNIA
U.S. ENERGY R&D ADMINISTRATION
IDAHO OPERATIONS OFFICE
IDAHO FALLS, IDAHO
1495-CPP-659-F-120
FRAME NO. 4 of 6
REV. 23
SCALE NONE
DATE 10-25-77
INDEX CODE NUMBER
2000659242871334 46
AS-BUILT AS OF 09-16-2010 SEE DRF-331133
INCORPORATED FDC-4780 AS BUILT AS OF 05-03-2010 SEE DRF-329984
ASSESSED AND VERIFIED AS BUILT AS OF 1-4-05, SEE DAR-108863
REVISIONS
DRAWN G.K.K.
CHECKED G. Rush
APPROVED J. Paul
APPROVED Vick Bhn
APPROVED
APPROVED
ACC APPROVED

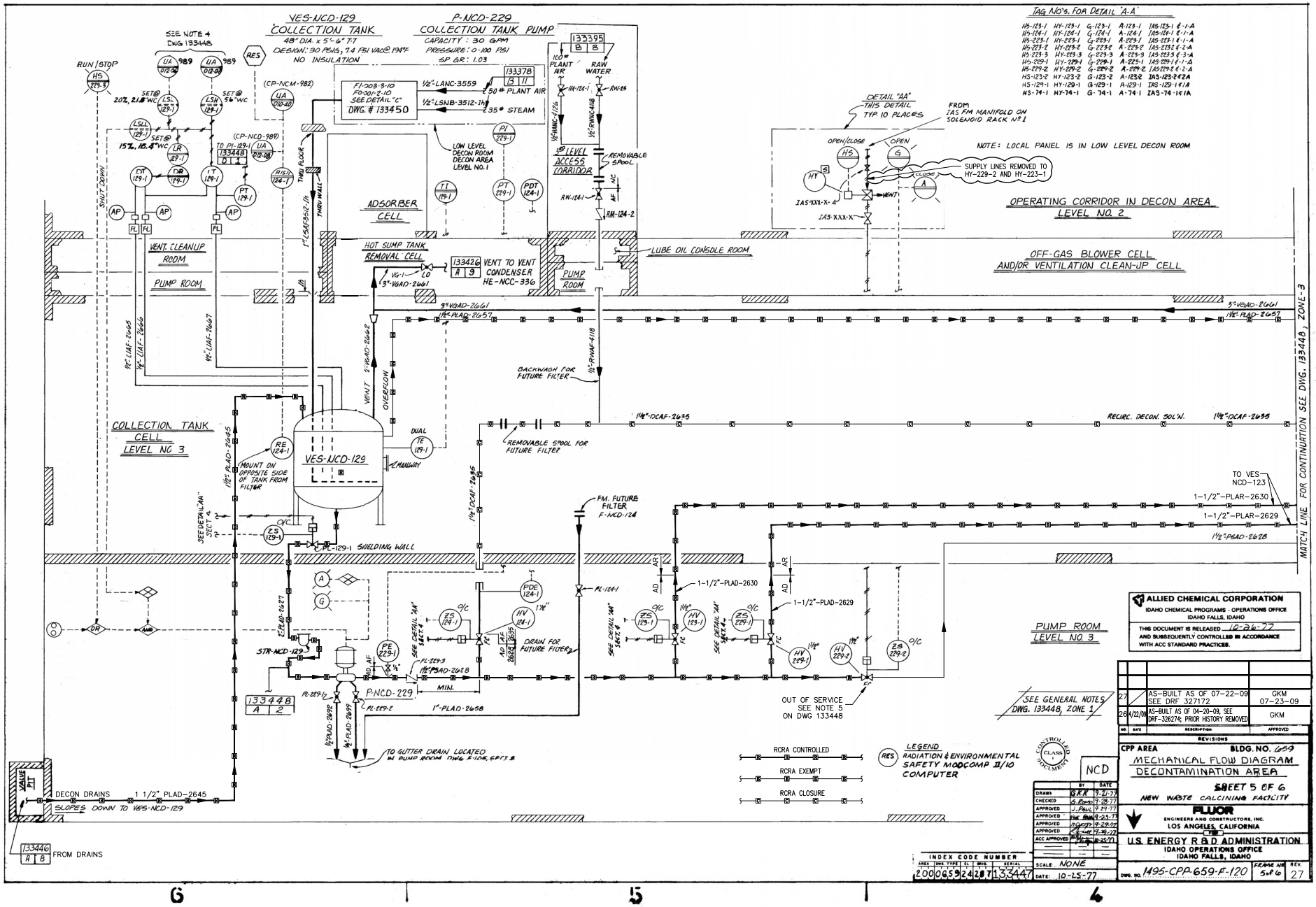

File: 133447-27.dwg Date: 07/23/09 3:14 PM Layout Name: Model
Path: K:\NEED Mod Drafting\Controlled DWGS\DRF-327172
ID: HSPENCER

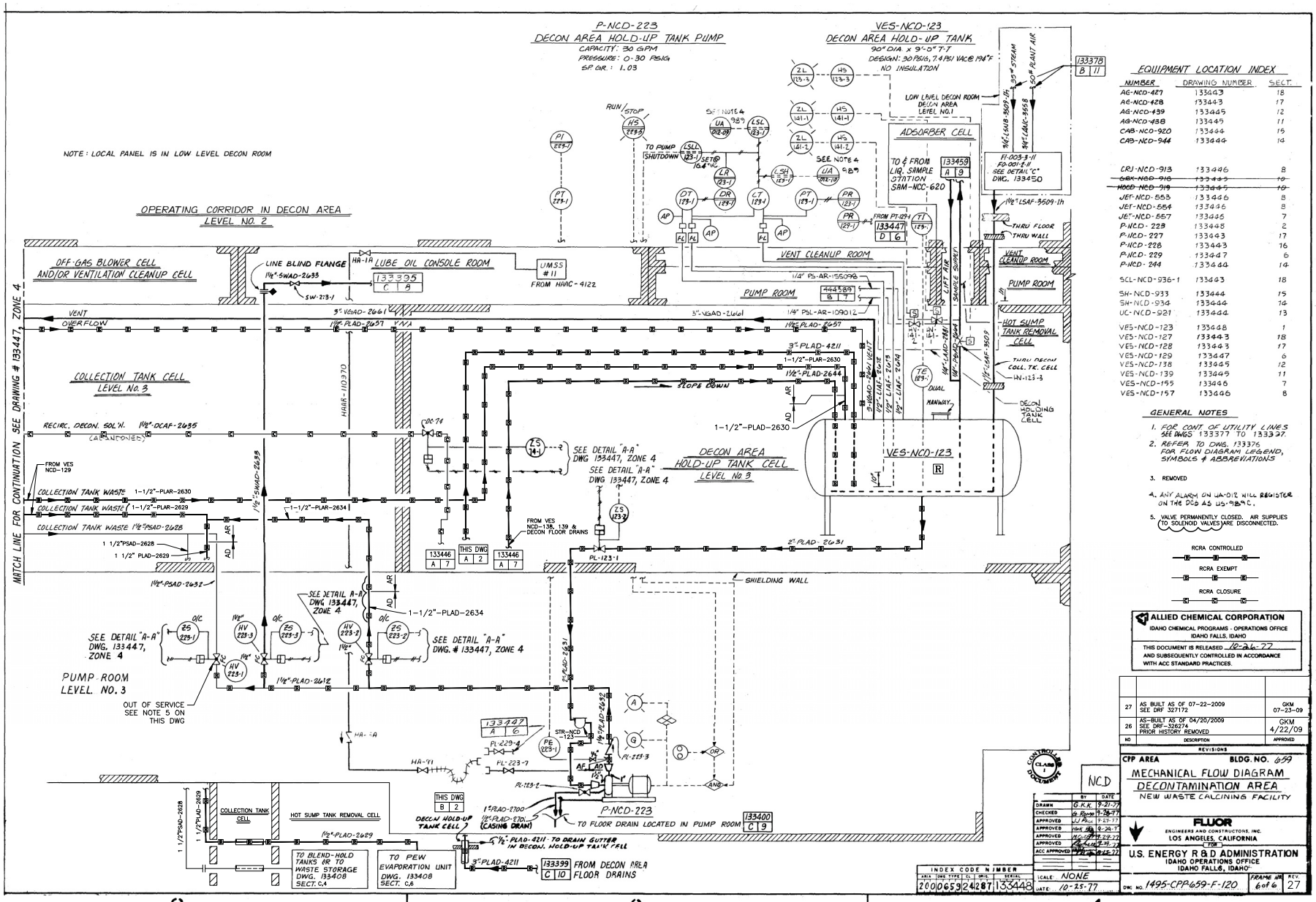
P-NCD-223
DECON AREA HOLD-UP TANK PUMP
CAPACITY: 30 GPM
PRESSURE: 0-30 PSIG
SP. GR.: 1.03
VES-NCD-123
DECON AREA HOLD-UP TANK
90" DIA x 9'-0" T-T
DESIGN: 30 PSIG, 7.4 PSI VAC @ 194°F
NO INSULATION
NOTE: LOCAL PANEL IS IN LOW LEVEL DECON ROOM
OPERATING CORRIDOR IN DECON AREA
LEVEL NO. 2
OFF-GAS BLOWER CELL
AND/OR VENTILATION CLEANUP CELL
LUBE OIL CONSOLE ROOM
VENT CLEANUP ROOM
PUMP ROOM
ADSORBER CELL
HOT SUMP TANK REMOVAL CELL
COLLECTION TANK CELL
LEVEL NO. 3
DECON AREA
HOLD-UP TANK CELL
LEVEL NO 3
PUMP ROOM
LEVEL NO. 3
SHIELDING WALL
MATCH LINE FOR CONTINUATION SEE DRAWING # 133447, ZONE 4
EQUIPMENT LOCATION INDEX
GENERAL NOTES
1. FOR CONT. OF UTILITY LINES SEE DWGS 133377 TO 133397.
2. REFER TO DWG. 133376 FOR FLOW DIAGRAM LEGEND, SYMBOLS & ABBREVIATIONS
3. REMOVED
4. ANY ALARM ON UA-012 WILL REGISTER ON THE DCS AS US-989C.
5. VALVE PERMANENTLY CLOSED. AIR SUPPLIES TO SOLENOID VALVES ARE DISCONNECTED.
RCRA CONTROLLED
RCRA EXEMPT
RCRA CLOSURE
ALLIED CHEMICAL CORPORATION
IDAHO CHEMICAL PROGRAMS - OPERATIONS OFFICE
IDAHO FALLS, IDAHO
THIS DOCUMENT IS RELEASED 10-26-77
AND SUBSEQUENTLY CONTROLLED IN ACCORDANCE WITH ACC STANDARD PRACTICES.
REVISIONS
CPP AREA
BLDG. NO. 659
MECHANICAL FLOW DIAGRAM
DECONTAMINATION AREA
NEW WASTE CALCINING FACILITY
FLUOR
ENGINEERS AND CONSTRUCTORS, INC.
LOS ANGELES, CALIFORNIA
U.S. ENERGY R&D ADMINISTRATION
IDAHO OPERATIONS OFFICE
IDAHO FALLS, IDAHO
SCALE: NONE
DATE: 10-25-77
DWG. NO. 1495-CPP-659-F-120
FRAME NO. 6 of 6
REV. 27
CAD OVERLAY DRAWING
FIELD VERIFIED REV 14 OUT OF CELL

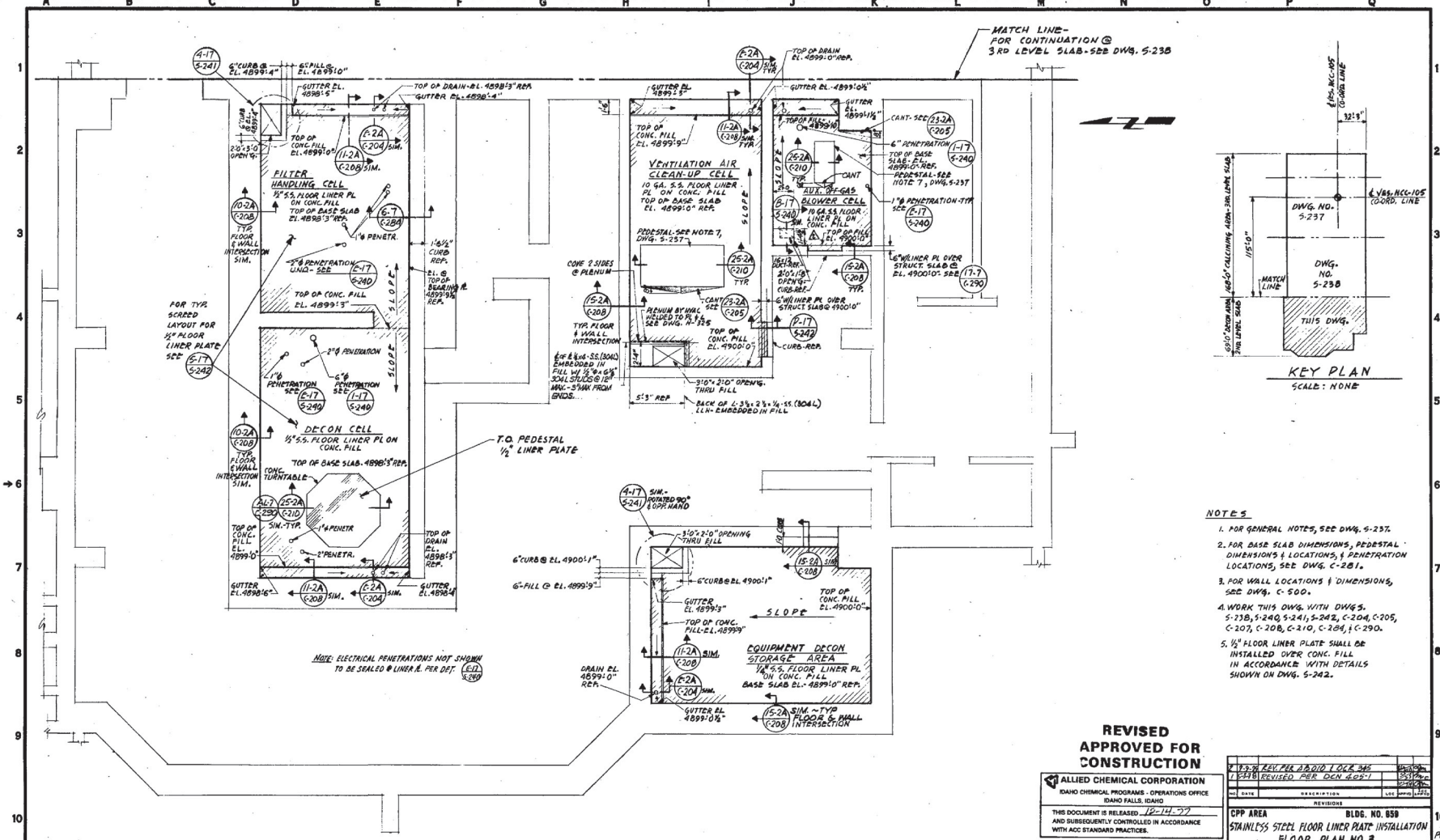

REMAIN DRAWING

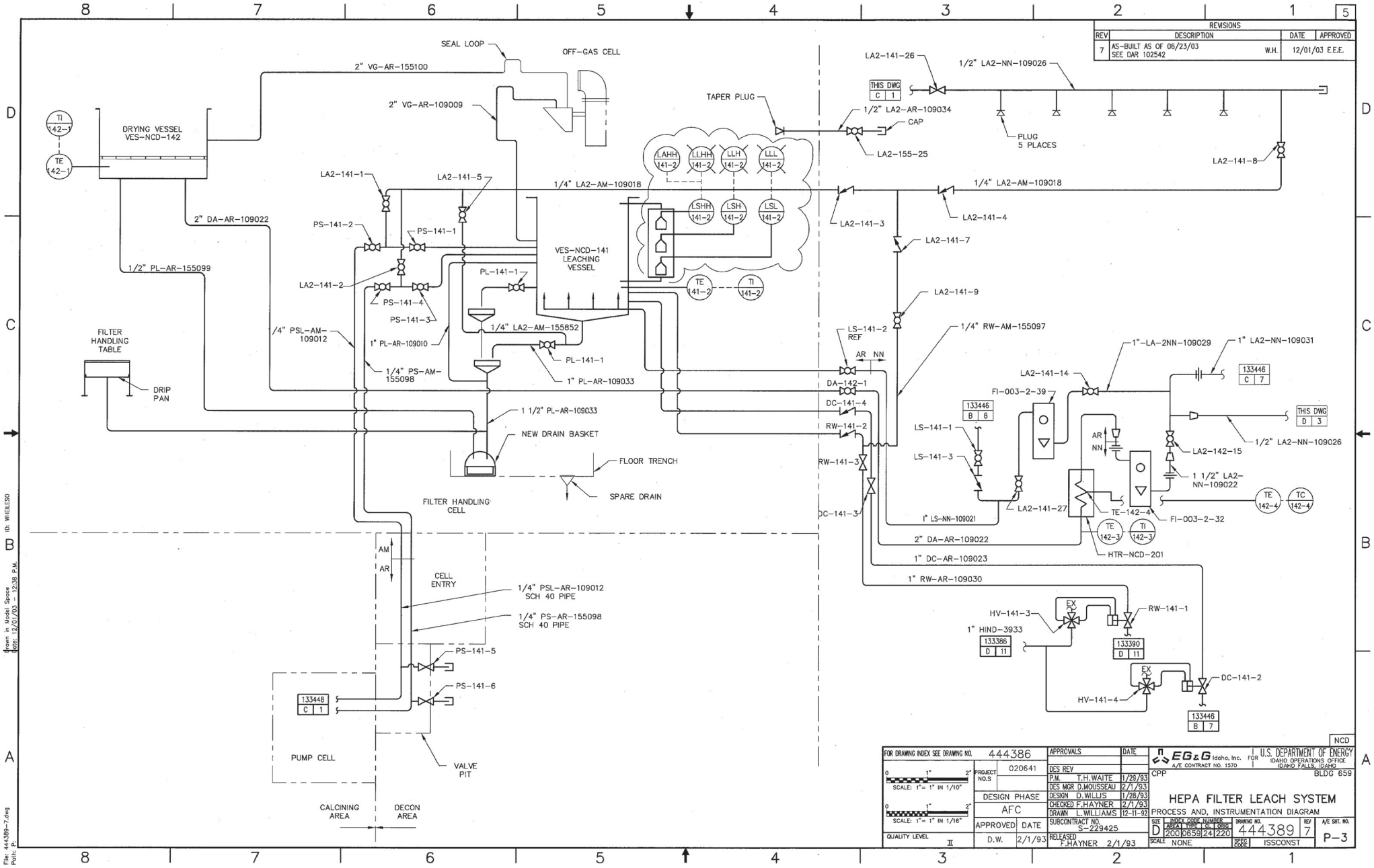
SEAL LOOP
OFF-GAS CELL
2" VG-AR-155100
2" VG-AR-109009
TI 142-1
TE 142-1
DRYING VESSEL VES-NCD-142
2" DA-AR-109022
1/2" PL-AR-155099
LA2-141-1
LA2-141-5
PS-141-2
PS-141-1
LA2-141-2
PS-141-4
PS-141-3
1/4" PSL-AM-109012
1" PL-AR-109010
1/4" PS-AM-155098
PL-141-1
1/4" LA2-AM-155852
1" PL-AR-109033
1/4" LA2-AM-109018
VES-NCD-141 LEACHING VESSEL
LAHH 141-2
LLHH 141-2
LLH 141-2
LLL 141-2
LSHH 141-2
LSH 141-2
LSL 141-2
TE 141-2
TI 141-2
FILTER HANDLING TABLE
DRIP PAN
1 1/2" PL-AR-109033
NEW DRAIN BASKET
FLOOR TRENCH
SPARE DRAIN
FILTER HANDLING CELL
AM
AR
CELL ENTRY
1/4" PSL-AR-109012 SCH 40 PIPE
1/4" PS-AR-155098 SCH 40 PIPE
PS-141-5
PS-141-6
133448 C 1
PUMP CELL
VALVE PIT
CALCINING AREA
DECON AREA
TAPER PLUG
THIS DWG C 1
1/2" LA2-AR-109034
CAP
LA2-155-25
LA2-141-26
1/2" LA2-NN-109026
PLUG 5 PLACES
LA2-141-8
1/4" LA2-AM-109018
LA2-141-3
LA2-141-4
LA2-141-7
LA2-141-9
1/4" RW-AM-155097
LS-141-2 REF
AR NN
DA-142-1
DC-141-4
RW-141-2
RW-141-3
DC-141-3
1" LA2-NN-109031
1"-LA-2NN-109029
LA2-141-14
133446 C 7
FI-003-2-39
133446 B 8
THIS DWG D 3
1/2" LA2-NN-109026
LS-141-1
LS-141-3
LA2-142-15
1 1/2" LA2-NN-109022
TE 142-4
TC 142-4
LA2-141-27
TE-142-4
FI-003-2-32
1" LS-NN-109021
TE 142-3
TI 142-3
HTR-NCD-201
2" DA-AR-109022
1" DC-AR-109023
1" RW-AR-109030
HV-141-3
RW-141-1
1" HIND-3933
133386 D 11
133390 D 11
DC-141-2
HV-141-4
133446 B 7
NCD
FOR DRAWING INDEX SEE DRAWING NO. 444386
SCALE: 1"= 1" IN 1/10"
SCALE: 1"= 1" IN 1/16"
QUALITY LEVEL II
PROJECT NO.S 020641
DESIGN PHASE AFC
APPROVED D.W. DATE 2/1/93
APPROVALS DATE
DES REV
P.M. T.H.WAITE 1/29/93
DES MGR D.MOUSSEAU 2/1/93
DESIGN D.WILLIS 1/28/93
CHECKED F.HAYNER 2/1/93
DRAWN L.WILLIAMS 12-11-92
SUBCONTRACT NO. S-229425
RELEASED F.HAYNER 2/1/93
EG&G Idaho, Inc. A/E CONTRACT NO. 1570
FOR U.S. DEPARTMENT OF ENERGY IDAHO OPERATIONS OFFICE IDAHO FALLS, IDAHO
CPP BLDG 659
HEPA FILTER LEACH SYSTEM
PROCESS AND INSTRUMENTATION DIAGRAM
SIZE D INDEX CODE NUMBER AREA 200 TYPE 0659 CL 24 ORIG 220
DRAWING NO. 444389 REV 7
A/E SHT. NO. P-3
SCALE NONE
SPEC CODE ISSCONST
REVISIONS
REV 7 DESCRIPTION AS-BUILT AS OF 06/23/03 SEE DAR 102542 W.H. DATE 12/01/03 APPROVED E.E.E.
ID: WIGILESO
Drawn in Model Space Date: 12/01/03 - 12:38 P.M.
File: 444389-7.dwg Path: P:

REV	DESCRIPTION	DATE	APPROVED
3	PER DCN #167361-AB24 LTR	11/5/96	

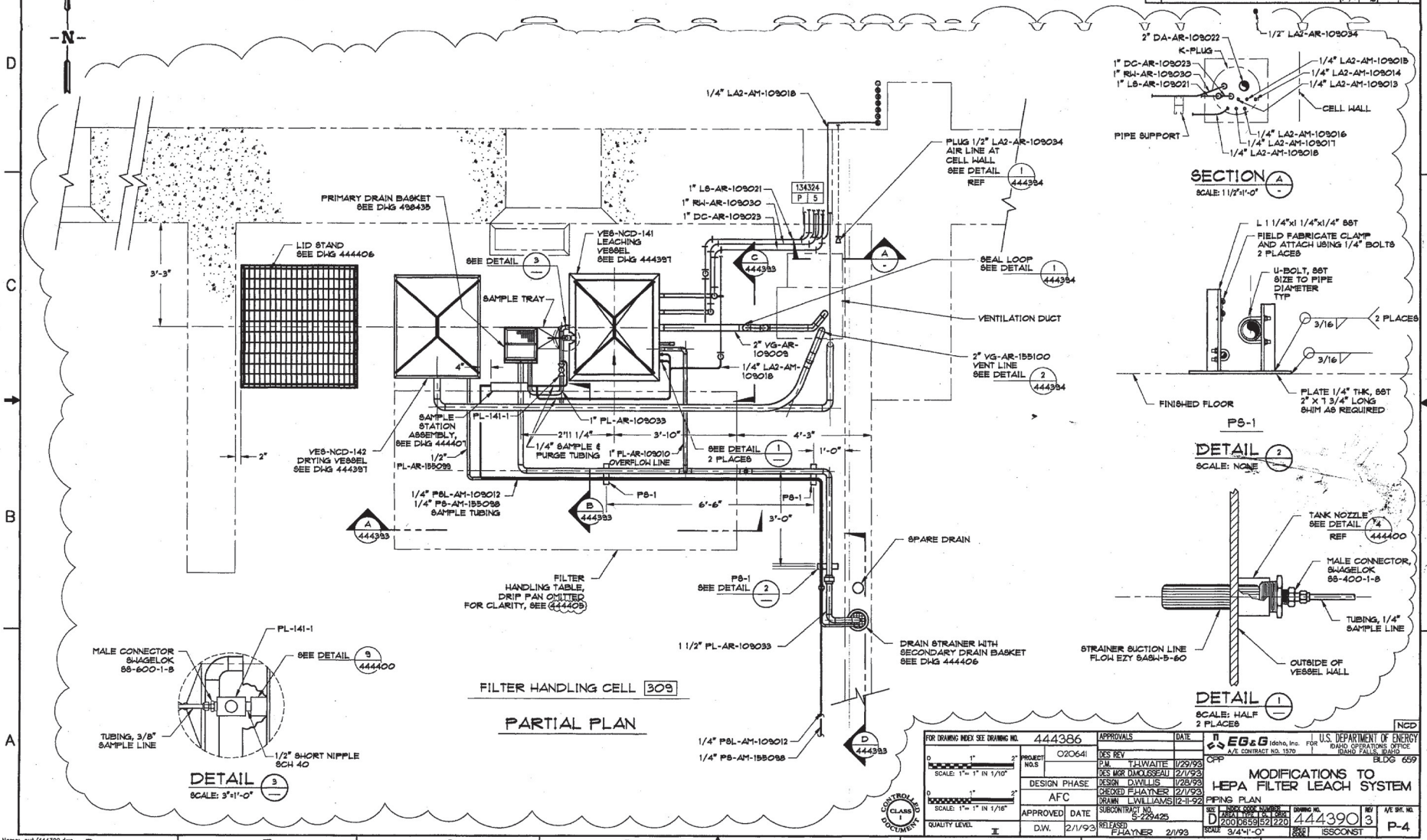

FOR DRAWING INDEX SEE DRAWING NO.	444386	APPROVALS	DATE
SCALE: 1"= 1" IN 1/10"	PROJECT NO.S 020641	DES REV	
		P.M. T.H.WAITE	1/29/93
		DES MGR D.MOUSSEAU	2/1/93
	DESIGN PHASE	DESIGN D.WILLIS	1/28/93
SCALE: 1"= 1" IN 1/16"	AFC	CHECKED F.HAYNER	2/1/93
		DRAWN L.WILLIAMS	12-11-92
QUALITY LEVEL II	APPROVED D.W. DATE 2/1/93	SUBCONTRACT NO. S-229425	
		RELEASED F.HAYNER	2/1/93

EG&G Idaho, Inc. A/E CONTRACT NO. 1570 — FOR U.S. DEPARTMENT OF ENERGY, IDAHO OPERATIONS OFFICE, IDAHO FALLS, IDAHO

OPP — BLDG 659

MODIFICATIONS TO HEPA FILTER LEACH SYSTEM

PIPING PLAN

SIZE	INDEX CODE NUMBER (AREA TYP. SYS. SEQ.)	DRAWING NO.	REV	A/E SHT. NO.
D	200 D659 S2 220	444390	3	P-4
SCALE 3/4"=1'-0"	SPEC CODE ISSCONST			

NCD

CONTROLLED DOCUMENT CLASS I

Name: put/444390.dwg
Date: 10-12-94
Time: 18:26:57 Ver: 12_c1

DRAWING NUMBER

444390

FMT-01-REV 2

REVISIONS		
REV	DESCRIPTION	EFFECTIVE DATE:
3	ASSESSED AND VERIFIED AS BUILT AS OF 11-30-04 SEE DAR 118074	12-15-04 DEJ

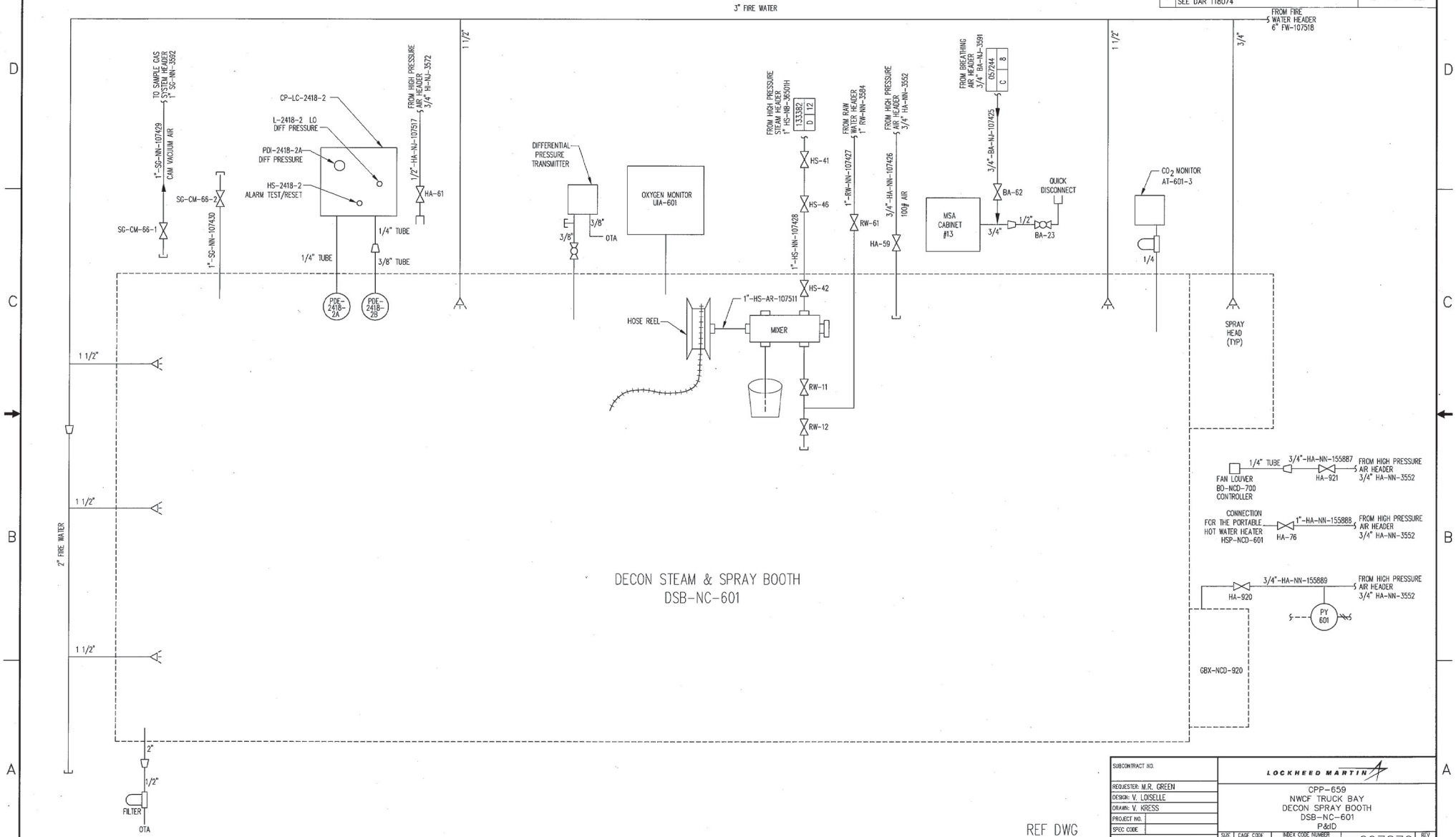

REF DWG
133378

SUBCONTRACT NO.	LOCKHEED MARTIN
REQUESTER: M.R. GREEN	CPP-659 NWCF TRUCK BAY DECON SPRAY BOOTH DSB-NC-601 P&ID
DESIGN: V. LOISELLE	
DRAWN: V. KRESS	
PROJECT NO.	
SPEC CODE	SIZE D; CAGE CODE 01MF3; INDEX CODE NUMBER AREA 200 TYPE 0659 CL 24 ORIG 530; DWG-097870; REV 3
FOR REVIEW/APPROVAL SIGNATURES SEE DAR NO. 16089	
EFFECTIVE DATE: 4/12/99 MEL	SCALE: NONE; NC; SHEET 1 OF 1

REV STATUS OF SHEETS			
2	1	SHEET	
2	2	REV	

REVISIONS

REV	DESCRIPTION	EFFECTIVE DATE:
–	REPLACES DWG 094628 REV 1, DWG 094629 REV 1, AND DWG 094630 REV 1 SEE DAR 18246 VK	MEL 4–13–99
1	SEE DAR #41392 W.O. SSB ALR 10–5–99	MEL 10–21–99
2	SEE DAR 106213 VKJ	DEJ 11–5–03

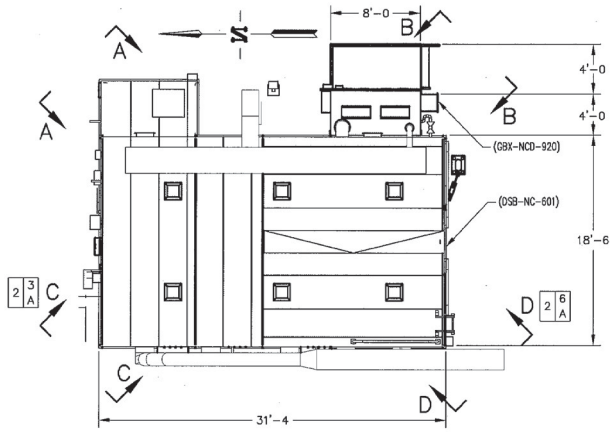

PLAN VIEW
SCALE: 3/16"=1'–0"

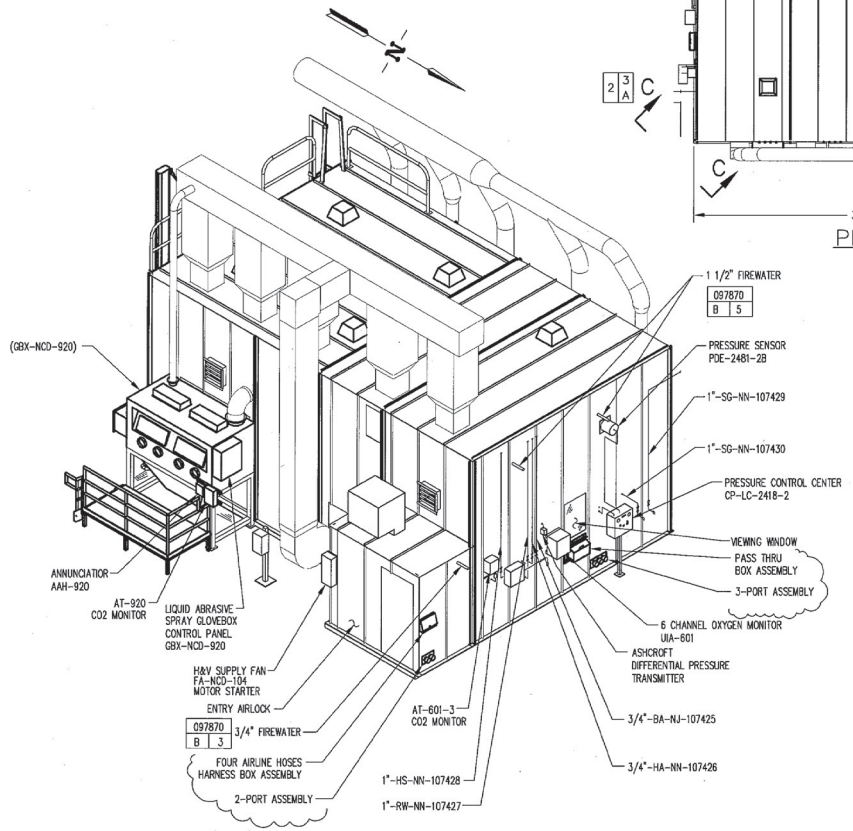

VIEW A–A (NORTHEAST ELEVATION)
SCALE: 1/4"=1'–0"

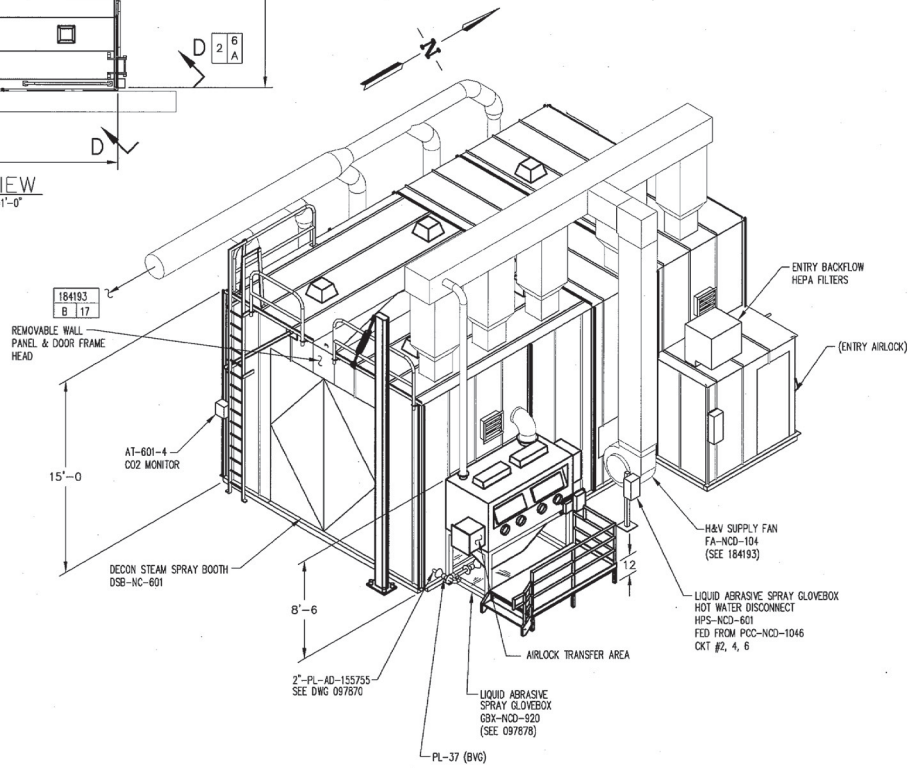

VIEW B–B (SOUTHEAST ELEVATION)
SCALE: 1/4"=1'–0"

DASH NO.	NEXT QTY REQD	FINAL QTY REQD	NEXT ASSY
–	–	–	–

APPLICATION

SUBCONTRACT NO.
REQUESTER: M.R. GREENE
DESIGN:
DRAWN: V. KRESS
PROJECT NO.
SPEC CODE
FOR REVIEW/APPROVAL SIGNATURES SEE DAR NO. 18246
EFFECTIVE DATE: 4–13–99 MEL

LOCKHEED MARTIN

CPP–659
NWCF TRUCK BAY
DECON SPRAY BOOTH AND GLOVEBOX
DSB–NC–601 AND GBX–NCD–920
CONFIGURATION

SIZE	CAGE CODE	INDEX CODE NUMBER AREA	TYPE	CL	ORIG	DWG–097877	REV
D	01MF3	200	0659	60	530		2

SCALE: NOTED NCD SHEET 1 OF 2

FMT–D1–REV 2
File: 097877–2.DWG
Path: D:
Layout Name: Sheet 1
Date: 11/04/03 – 07:39 A.M.
ID: KRESV

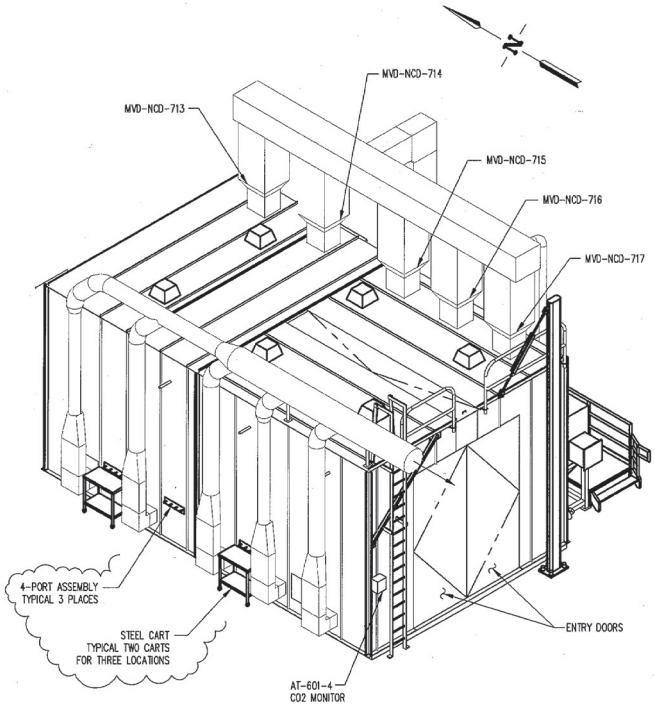

VIEW D–D (SOUTHWEST ELEVATION)

SCALE: 1/4"=1'-0"

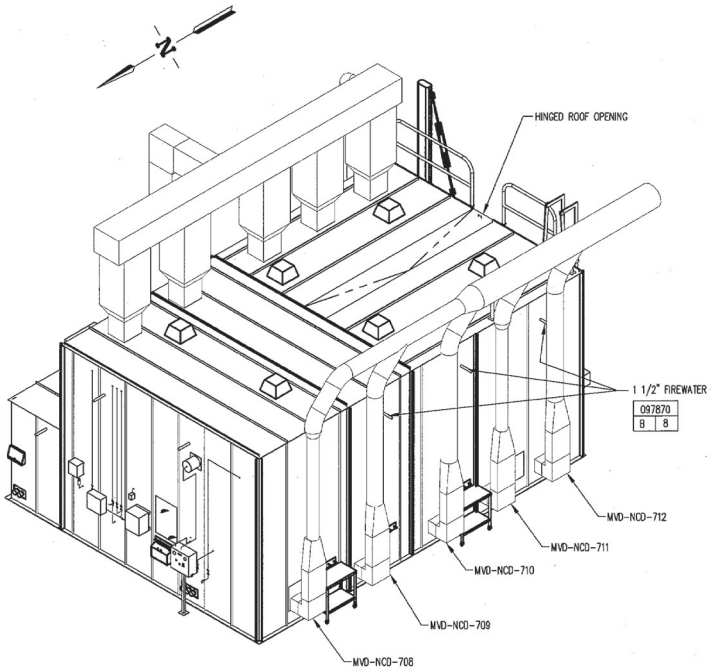

VIEW C–C (NORTHWEST ELEVATION)

SCALE: 1/4"=1'-0"

SIZE	CAGE CODE	INDEX CODE NUMBER					DWG-097877	REV
		AREA	TYPE	CL	DRG			
D	01MF3	200	0659	60	5.30			2
SCALE: NOTED							SHEET 2	

File: 097877-2.DWG
Path: G:
Layout Name: Sheet 2
Date: 11/04/03 – 08:13 A.M.
ID: KRESV

REVISIONS			
REV	DESCRIPTION		EFFECTIVE DATE:
1	SEE DAR #41393 W.O. SSB	ALR 10-5-99	MEL 10-21-99
2	ASSESSED AND VERIFIED AS BUILT AS OF 11-30-04 SEE DAR 118074		12-15-04 DEJ

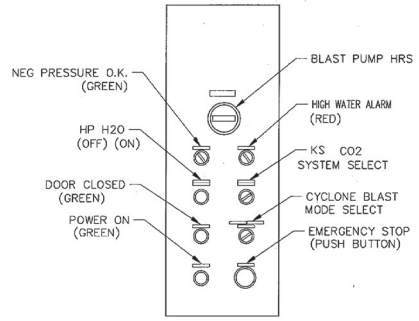

ELECTRICAL PANEL DETAIL

SEE DWG 097891

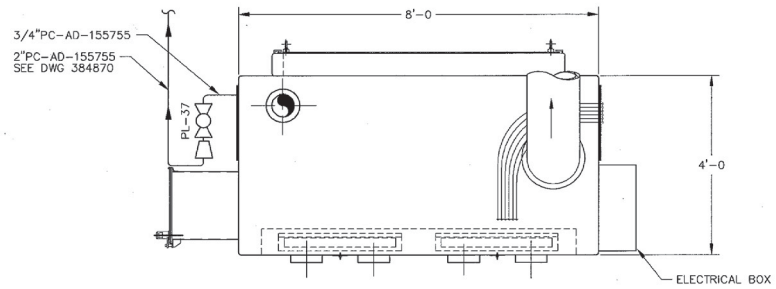

PLAN VIEW

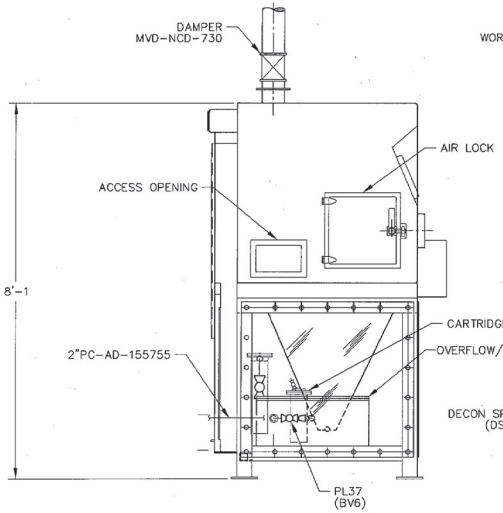

LEFT SIDE ELEVATION

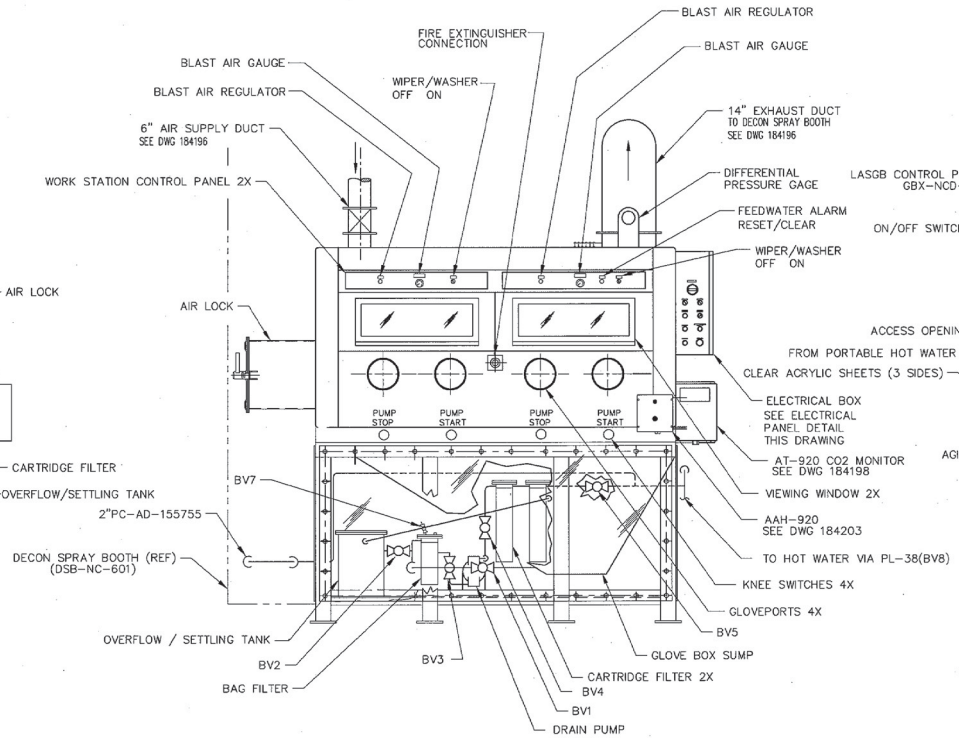

FRONT ELEVATION

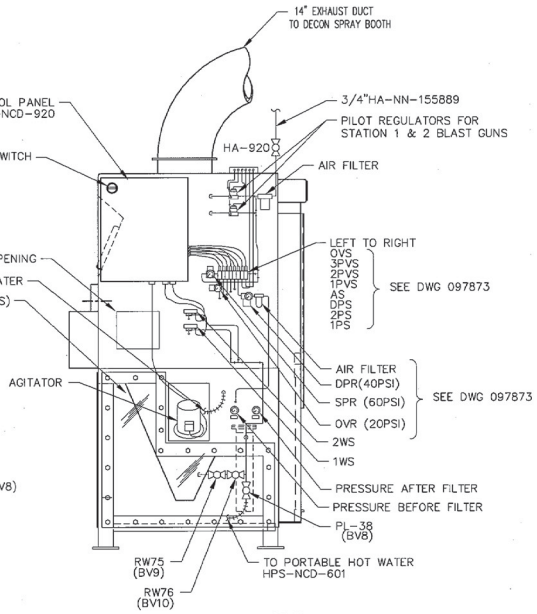

RIGHT SIDE ELEVATION

SUBCONTRACT NO.	LOCKHEED MARTIN
REQUESTER:	ICPP BLDG 659 NWCF TRUCK BAY LIQUID ABRASIVE SPRAY GLOVE BOX GBX-NCD-920 COMPONENT ARRANGEMENT
DESIGN:	
DRAWN: JUAN M TRACY	
PROJECT NO.	
SPEC CODE	
FOR REVIEW/APPROVAL SIGNATURES SEE DAR NO. 18613	SIZE D · CAGE CODE 01MF3 · INDEX CODE NUMBER AREA 1 200 TYPE 0659 A 42 SEQ 530 · DWG-097878 · REV 2
EFFECTIVE DATE: 4/13/99 MEL	SCALE: NONE · NCD · SHEET 1 OF 1

File: 097878-2.dwg Path: A:\Offs
Date: 12/15/04 – 12:36 P.M. Drawn in Model Space
ID: JUDYDE

REVISIONS		
REV	DESCRIPTION	EFFECTIVE DATE:
4	SEE DAR 41394 MEW	MEL 10-21-99
5	ASSESSED AND VERIFIED AS BUILT AS OF 11-30-04 SEE DAR 118074	12-15-04 DEJ

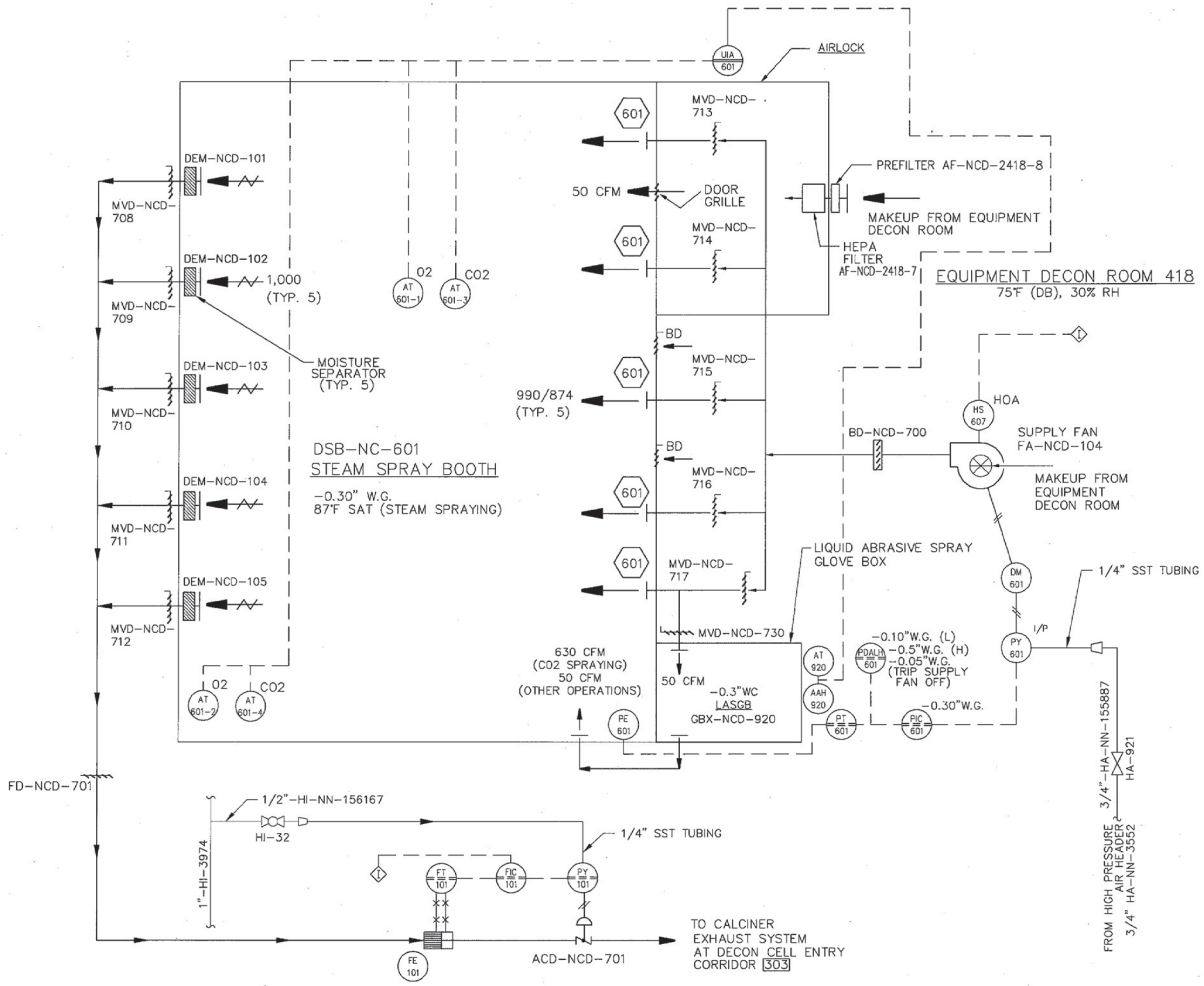

OPERATING LOGIC

1.0 GENERAL

1.1 THIS DRAWING ADDRESSES THE SUPPLY AND EXHAUST VENTILATION SYSTEMS FOR THE STEAM SPRAY BOOTH AND THE LIQUID ABRASIVE SPRAY GLOVEBOX.

1.2 THE STEAM SPRAY BOOTH OPERATES IN EITHER A VENTILATION ON OR VENTILATION OFF MODE.

1.3 WHEN THE STEAM SPRAY BOOTH VENTILATION SUPPLY FAN IS NOT OPERATING THE EXHAUST SYSTEM CONTINUES TO MAINTAIN THE INDICATED NEGATIVE BOOTH PRESSURE BY INDUCING THE AIRFLOW SCHEDULED AS VENTILATION OFF MODE THROUGH EXISTING BACKDRAFT DAMPERS.

1.4 SEE THE "SCHEDULE OF OPERATING SCHEMES" FOR THE POSSIBLE OPERATING SCHEMES, THEIR AIRFLOW SETPOINTS, AND THE DAMPER CONDITIONS (OPEN, CLOSED, MODULATION (MOD)).

2.0 SEQUENCE OF OPERATIONS

2.1 THE OPERATOR SELECTS THE OPERATING SCHEME. (ON OR OFF)

2.2 FOR THE SELECTED OPERATING SCHEME, THE SOFTWARE DOES THE FOLLOWING:
- 2.2.1 SETS THE SCHEDULED DAMPER CONDITIONS,
- 2.2.2 SETS THE SCHEDULED FLOW CONTROLLER SETPOINTS,
- 2.2.3 STARTS SUPPLY FAN FA-NCD-104.

2.3 FLOW CONTROLLER MODULATES THE INDICATED DAMPER TO MAINTAIN EXHAUST AIRFLOW AT SETPOINT.

2.4 THE SPACE PRESSURE CONTROLLER, PIC-601, MODULATES THE INLET VANES OF SUPPLY FAN FA-NCD-104 TO MAINTAIN SETPOINT.

2.5 AT THE END OF OPERATIONS, THE OPERATOR SELECTS THE OFF SCHEME TO MAINTAIN MINIMUM FLOW AND BOOTH PRESSURE DURING NON-OPERATING CONDITIONS.

3.0 OTHER OPERATIONS

3.1 AIR FROM THE EQUIPMENT DECON ROOM IS DRAWN THROUGH THE AIRLOCK DOOR AND INTO THE SPACE THROUGH EXISTING FILTERS AS INDICATED.

3.2 NO SMOKE DETECTION OR AUTOMATIC SHUTDOWN OF THE SUPPLY FAN IS PROVIDED FOR FIRE. IN THE EVENT OF FIRE IN THE TRUCK BAY OR THE SPRAY BOOTH, THE CONDITION IS ALARMED AND THE OPERATOR MUST MANUALLY STOP THE FAN.

3.3 CO2 AND O2 DETECTORS ACTIVATE ALARM UIA-601 UPON DEVIATION FROM SETPOINTS DETERMINED BY THE CONTRACTOR..

4.0 NOTES

4.1 SCHEDULED SUPPLY FAN AIRFLOWS FOR CO2 INJECTION ARE MINIMUM AIRFLOWS, BASED UPON CONTINUOUS CO2 BLAST GUN FLOWS OF 580 CFM.

4.2 FOR LEGEND SEE DWG 184176.

4.3 FOR EQUIPMENT SCHEDULE SEE DWG 184191.

REFERENCE DRAWINGS

133190 PROCESS & INSTRUMENTATION DIAGRAM, EQUIPMENT DECON ROOM

SCHEDULE OF OPERATING SCHEMES

SCHEMES	STEAM SPRAY BOOTH (SSB)				FLOW CONTROLLER SETPOINTS (CFM)	DAMPER CONDITIONS (TAG NO "ACD-NCD-XXX")
			S. FAN	EXHAUST		
	STEAM INJ	CO2 INJ	CFM	CFM	FIC-601	701
VENTILATION ON	YES	NO	4,900	5,000	5,000	MOD
VENTILATION ON	NO	YES	4,900	5,000	5,000	MOD
VENTILATION OFF	NO	NO	0	1,500	1,500	MOD

FOR DRAWING INDEX SEE DRAWING NO. 184175	SUBCONTRACT NO. 294005.2
SCALE: 1"= 1" IN 1/10"	REQUESTER: C.E. JOHNSON
	DESIGN: M VAN SICKLE
	DRAWN: RA FRIESZ
SCALE: 1"= 1" IN 1/16"	PROJECT NO. 294005.2
	SPEC CODE ISSCONST
DESIGN PHASE: AFC	FOR REVIEW/APPROVAL SIGNATURES SEE DAR NO. 5745
QUALITY LEVEL: 3	EFFECTIVE DATE: 3/24/97

LOCKHEED MARTIN

ICPP BLDG 659
SPRAY BOOTH DSB-NC-601
HVAC AIR FLOW AND CONTROL DIAGRAM

NCD

SIZE	CAGE CODE	INDEX CODE NUMBER				DWG-	REV
		AREA	TYPE	SL	ORG		
D	01MF3	200	0659	20	530	184190	5

SCALE NONE SHEET V-1

ADOCS NO.

FMT-01-REV 0
ID: JUDYDE
Date: 12/15/04 - 12:14 PM | Drawn in Model Space
File: 184190-5.dwg
Path: P:\Tiffs

REVISIONS			
REV	DESCRIPTION		EFFECTIVE DATE:
2	SEE DAR 17962	JMT	4/12/99 MEL

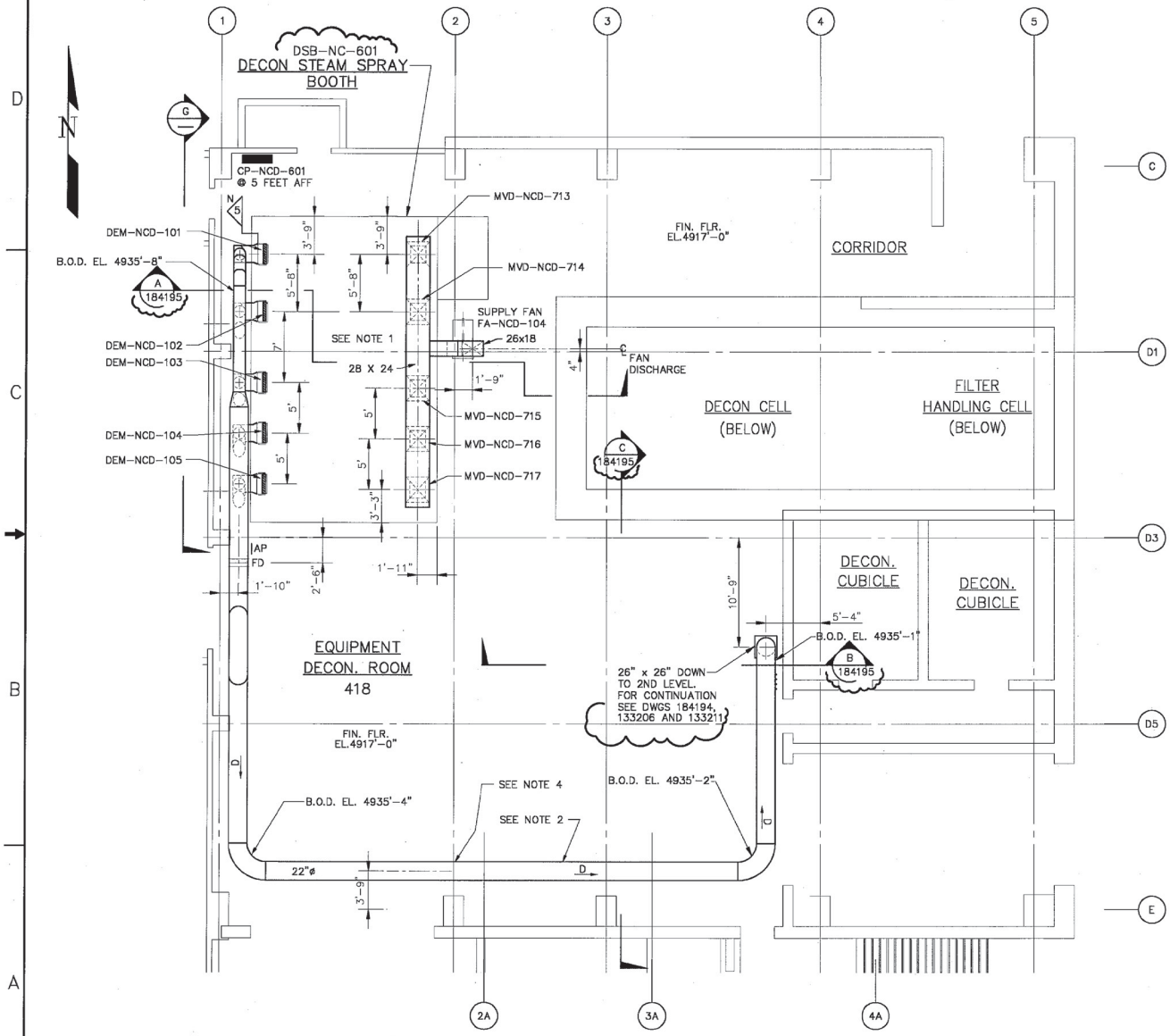

1ST LEVEL HVAC PLAN

THIS DRAWING CONTAINS THE FOLLOWING X-REFS:

659-HV01.DWG
659-A1M.DWG
C02-NEW.DWG
SPRAYOLD.DWG
SPRAYNEW.DWG
NCD-920.DWG
NCD-933.DWG
NCD-934.DWG
NCD-921.DWG
WASHTABL.DWG
WASHER35.DWG
K-S_4X4.DWG
K-S_4X8.DWG
PLATFORM.DWG

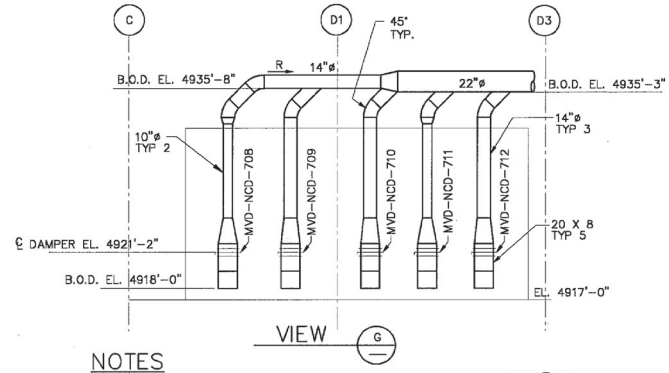

VIEW G

NOTES

1. FOR DIMENSIONS OF DUCT PENETRATIONS AND LOCATIONS, SEE DWG 184178. SEAL SPACE BETWEEN DUCT AND DUCT PENETRATION FRAMING W/RTV SEALANT ALL AROUND TYP.
2. THE PURPOSE OF THE EXHAUST DUCTWORK SLOPE IS TO DRAIN CONDENSATE. DUCTWORK SLOPE SHALL BE 1 INCH PER 30 FEET IN THE DIRECTION INDICATED. ELEVATIONS SHOWN ARE BASED UPON THIS SLOPE TO THE NEAREST INCH. CONTRACTOR TO DETERMINE EXACT ELEVATIONS.
3. BOTTOM OF THE DUCT ELEVATION AT COLUMN LINE 2 TO BE EL. 3935'-3" TO AVOID INTERFERENCE WITH EXISTING STRUCTURAL MEMBER.
4. ALL EXHAUST DUCTWORK PRESSURE CLASSIFICATION IS -5.0 "WG."
5. FOR DUCT SUPPORT PLAN SEE DWG 184181.

FOR DRAWING INDEX SEE DRAWING NO. 184175	SUBCONTRACT NO. 294005.2	LOCKHEED MARTIN
SCALE: 1"= 1" IN 1/10"	REQUESTER: C.E. JOHNSON	ICPP BLDG 659 DECON SPRAY BOOTH DSB-NC-601 1ST LEVEL HVAC PLAN VIEW
SCALE: 1"= 1" IN 1/16"	DESIGN: M VAN SICKLE	
	DRAWN: RA FRIESZ	
	PROJECT NO. 294005.2	
	SPEC CODE ISSCONST	
DESIGN PHASE: AFC	FOR REVIEW/APPROVAL SIGNATURES SEE DAR NO. 5745	SIZE D; CAGE CODE 01MF3; INDEX CODE NUMBER AREA 200, TYPE 0659, Q 20, ORIG 530; DWG-184193; NCD; REV 2
QUALITY LEVEL: 3	EFFECTIVE DATE: 3/24/97.	SCALE: 3/16"=1'-0"; SHEET V-4

659-V4
MBC
2/10/97
9:50

ADOCS NO.

REV.	REVISION DESCRIPTION		APPROVED DATE	RE&C	
1	AS-BUILT W/NO DEN		11-20-96		
2	DRAWING REINSTATED SEE SAR 18807	HS	12-7-95		LDW

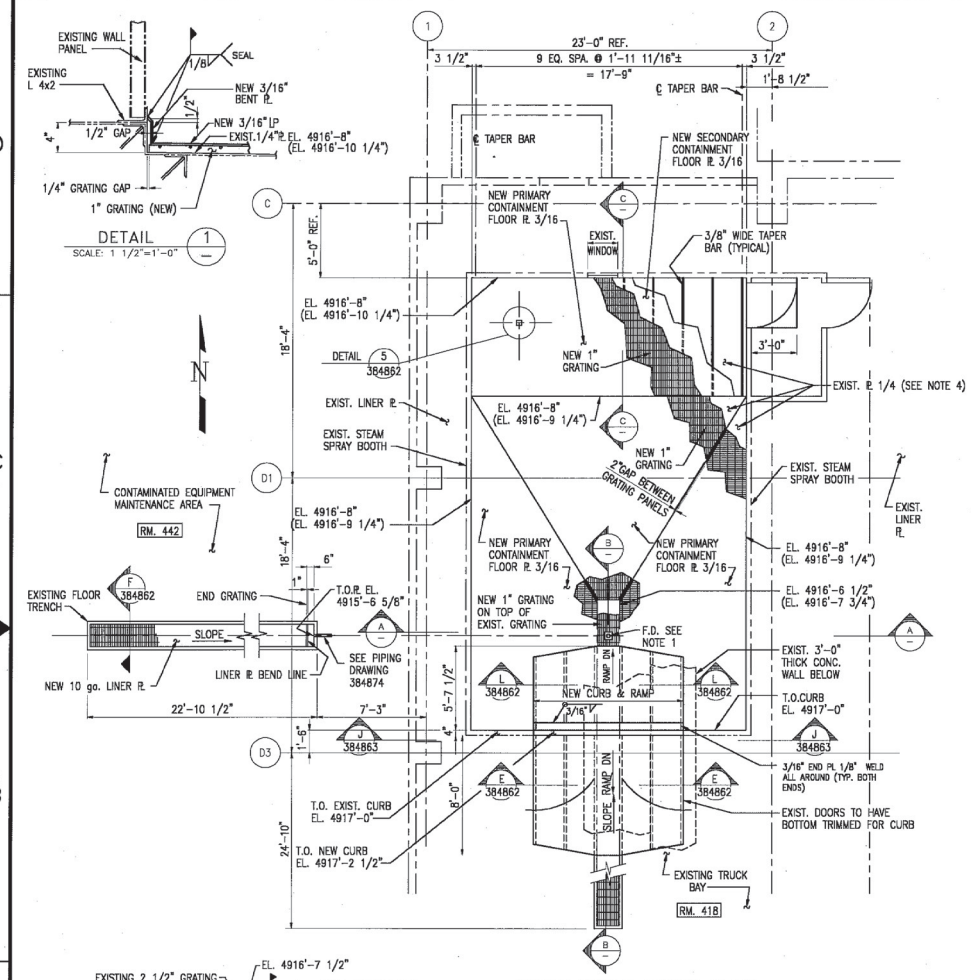

STEAM SPRAY BOOTH PLAN
SCALE: 1/4"=1'-0"

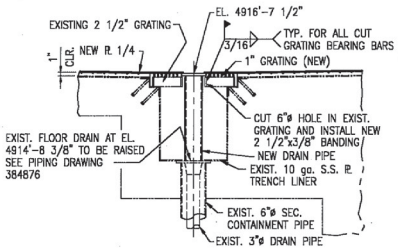

DETAIL 2
SCALE: 3/4"=1'-0"

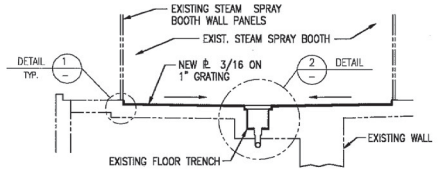

SECTION A
SCALE: 1/4"=1'-0"

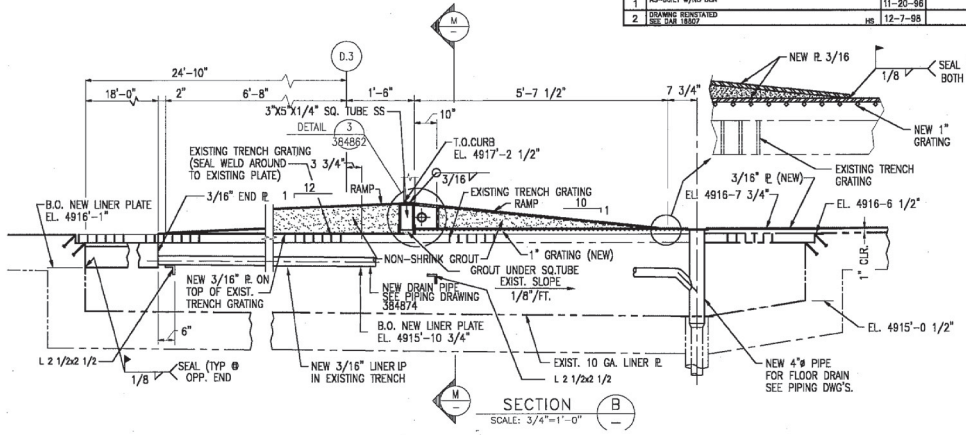

SECTION B
SCALE: 3/4"=1'-0"

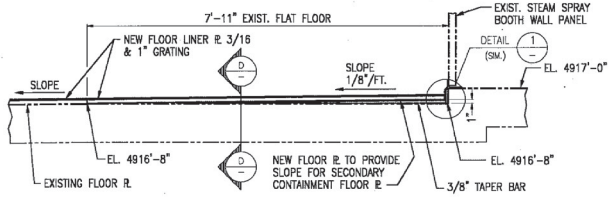

SECTION C
SCALE: 3/4"=1'-0"

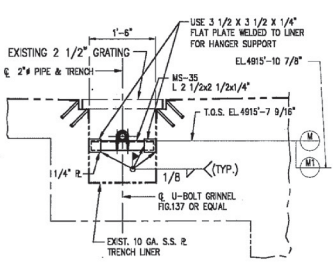

SECTION M
SCALE: 3/4"=1'-0"

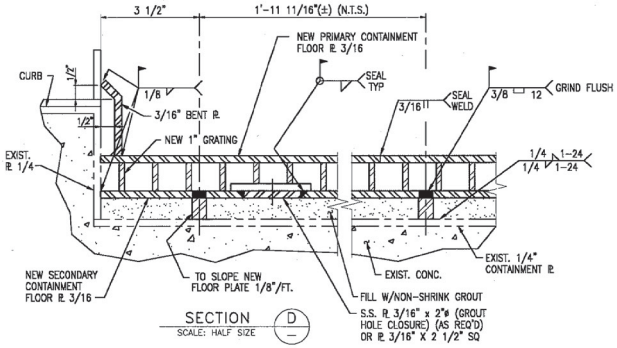

SECTION D
SCALE: HALF SIZE

NOTES

1. FLOOR DRAIN TO BE RAISED TO BOTTOM OF NEW PRIMARY CONTAINMENT FLOOR PLATE (SEE PIPING DRAWINGS).
2. ALL GRATING AND PLATE TO BE STAINLESS STEEL DESIGNED PER THE REQUIREMENTS OF ANSI/AISC N690.
3. ( ) NEW TOP OF PL AT PRIMARY CONTAINMENT FLOOR
4. ENTIRE EXISTING FLOOR AREA OF STEAM SPRAY BOOTH SHALL BE LIQUID PENETRANT TESTED BY THE CONTRACTOR TO IDENTIFY AREAS NEEDING TO BE REPAIRED. REPAIRS SHALL BE MADE TO THE EXISTING FLOOR LINER PLATE BY THE SUBCONTRACTOR IN ACCORDANCE WITH SPECIFICATION SECTION 05062.
5. 3/16" WELD IN 3/16" PLATE SHALL NOT BE INSPECTED FOR FULL PENETRATION.

NCD

DESIGN INTERFACE	DATE	DRAWING STATUS		APPROVALS		DATE
ARCHITECTURAL		DESIGN PHASE	DATE APPROVED	ORIGINATOR	ST	05/04/94
STRUCTURAL		AFC	10/14/94	CHECKER	SJT	9/7/94
ENVIRONMENTAL				RESPONSIBLE LDE		
ELECTRICAL				TASK MANAGER		
INSTRUMENTATION				QA ENGINEER		
MECHANICAL				CHIEF ENGINEER		
PROCESS				RE&C PROJECT MGR.		
PIPING				M&O PROJECT MGR.		
STRESS ANALYSIS		QUALITY LEVEL III		PROJECT NO. 9354.182		
				SUBCONTRACT NO. S-294005		
				ISSUED FOR CONSTRUCTION		

Raytheon
Engineers & Constructors
A Consolidation of Badger and BVAC
FOR
US DEPARTMENT OF ENERGY
IDAHO OPERATIONS OFFICE
IDAHO FALLS, IDAHO

IOPP TITLE II-PHASE I BLDG. 659
DEBRIS RULE COMPLIANCE PROJECT
STEAM SPRAY BOOTH
FLOOR PLAN, SECT. & DETAILS

SIZE	INDEX CODE NUMBERS AREA	DWG. TYPE	EL.	DRG#	DRAWING NO.	REV.
D	200	0659	61	812	384861	2

SCALE: AS SHOWN | SPEC. CODE | A/E SHEET NO. S-01

10/10/94 N PBM 9354.182 CAD NO: D32SS002.DWG FLT SCALE 1 = 1 COLOR PEN WEIGHT

384861

FORM INEG-01

REV.	REVISION DESCRIPTION		APPROVED DATE	RE&C	WINCO
7	SEE DAR 40409	MEW	8-12-99		
8	SEE DAR 40838	MEW	9-20-99		

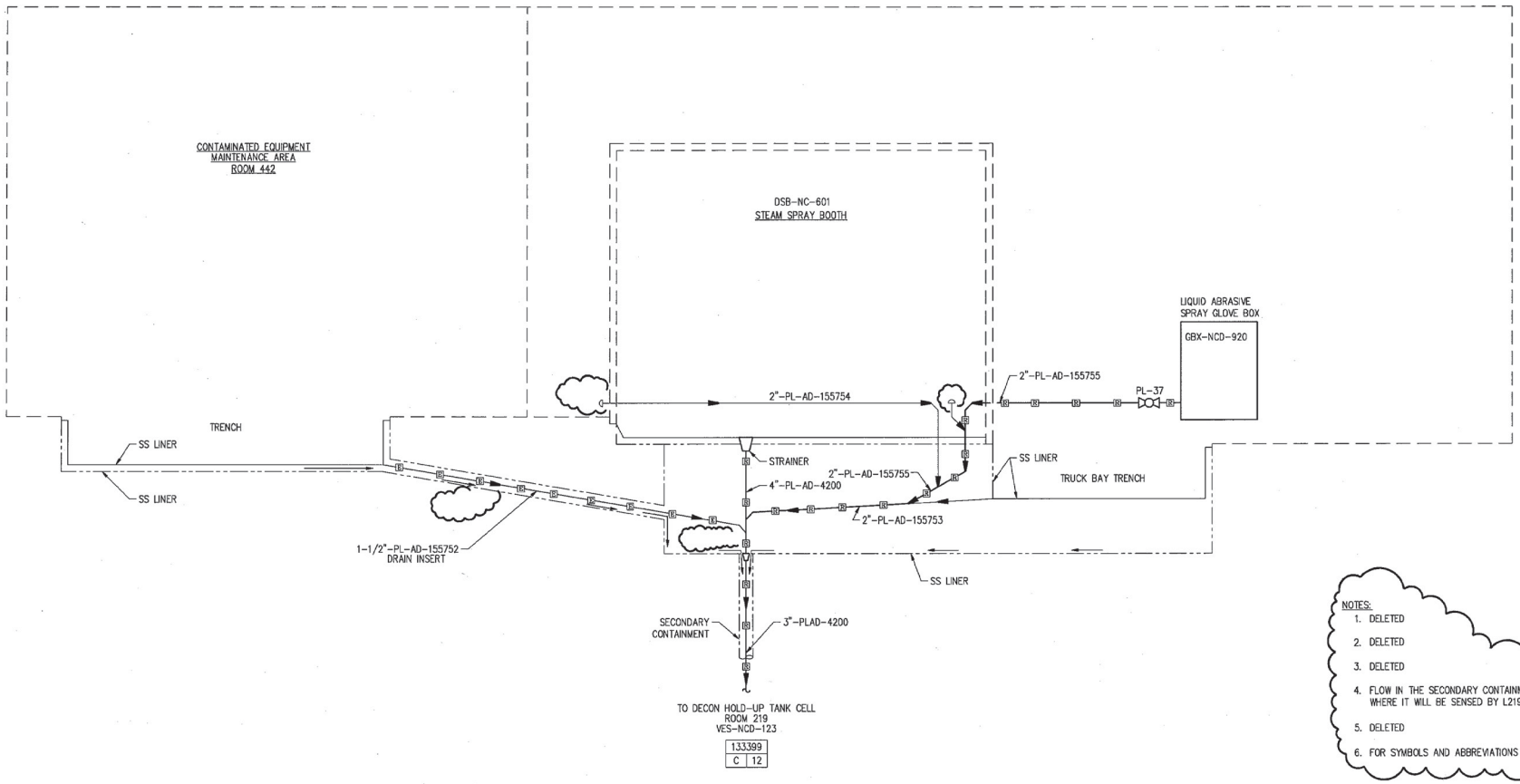

NOTES:

1. DELETED
2. DELETED
3. DELETED
4. FLOW IN THE SECONDARY CONTAINMENT WILL DRAIN TO ROOM 219 WHERE IT WILL BE SENSED BY L219C.
5. DELETED
6. FOR SYMBOLS AND ABBREVIATIONS REFER TO DRAWING 384885

RCRA CONTROLLED

RCRA EXEMPT

NCD

DESIGN INTERFACE	DATE
ARCHITECTURAL	
STRUCTURAL	
ENVIRONMENTAL	
ELECTRICAL	
INSTRUMENTATION	
MECHANICAL	
PROCESS	
PIPING	
STRESS ANALYSIS	

DRAWING STATUS	DATE
DESIGN PHASE	APPROVED
AFC	10-14-94
QUALITY LEVEL III	

APPROVALS		DATE
ORIGINATOR	MJN	5/9/94
CHECKER	KEN	9/7/94
RESPONSIBLE LDE		
TASK MANAGER		
QA ENGINEER		
CHIEF ENGINEER		
RE&C PROJECT MGR.		
M&O PROJECT MGR.		
PROJECT NO. 9354.182		
SUBCONTRACT NO. S-294005		
ISSUED FOR CONSTRUCTION		

Raytheon
Engineers & Constructors
A Consortium of Raytheon and WEMI
FOR
US DEPARTMENT OF ENERGY
IDAHO OPERATIONS OFFICE
IDAHO FALLS, IDAHO

ICPP BLDG. 659

DSB-NC-601 & GBX-NCD-920
PROCESS TRENCH AND DRAIN
FLOW DIAGRAM

SIZE	INDEX CODE NUMBER: AREA	DWG. TYPE	CL	DISC.	DRAWING NO.	REV.
D	200	0559	24	812	384870	8

SCALE NONE | SPEC. CODE | A/E SHEET NO. P-01

2 09/30/94 09:00 KEN 9354.182 PEN PARAM 1 2 3 4 5 6 7 8 9 10 11 12 13 14 15 D-650-FS CAD NO: D32PS008.DWG PLT SCALE 1 = 1

File: 384870.dwg
Path: P:\pewe
FORM INEL-01

User: MWHITELE
Date: 09/30/99 - 09:02 A.M.

384870 8

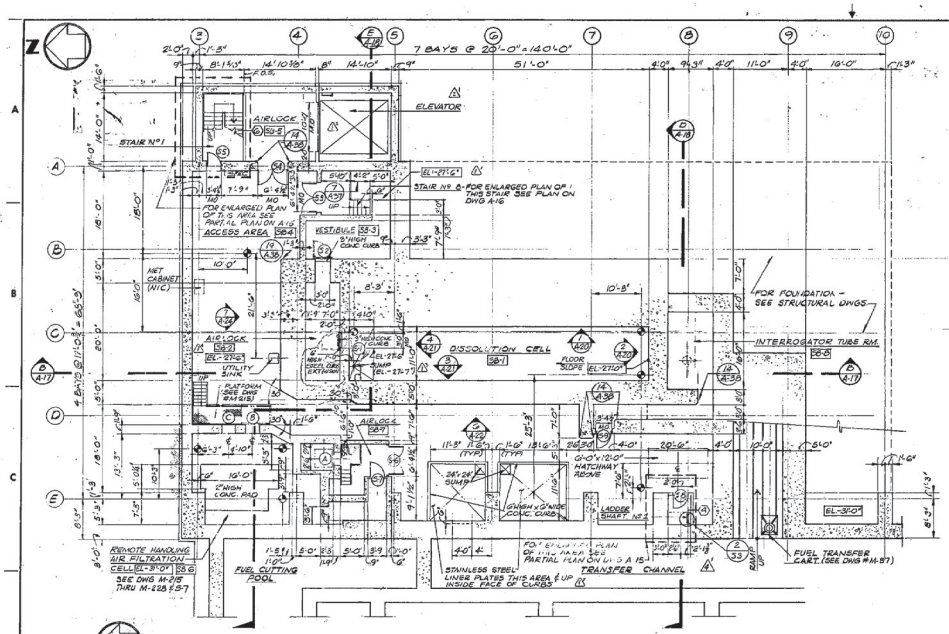

ENLARGED PARTIAL PLAN FIN FL REFERENCE EL-13'-0" (UNLESS OTHERWISE NOTED)
1/8" = 1'-0"

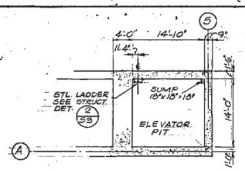

ENLARGED PARTIAL PLAN
FIN. FL. EL. - 37'-9" 1/8" = 1'-0"

NOTES
1. WINDOW DETAILS: SEE DWGS M-215 FOR WINDOWS (A), (B) & (C)
SEE DWGS M 72 FOR WINDOWS (D) THRU (K)
MONUMENT LOCATION - SEE (13) (2-37) (14) (2-37)

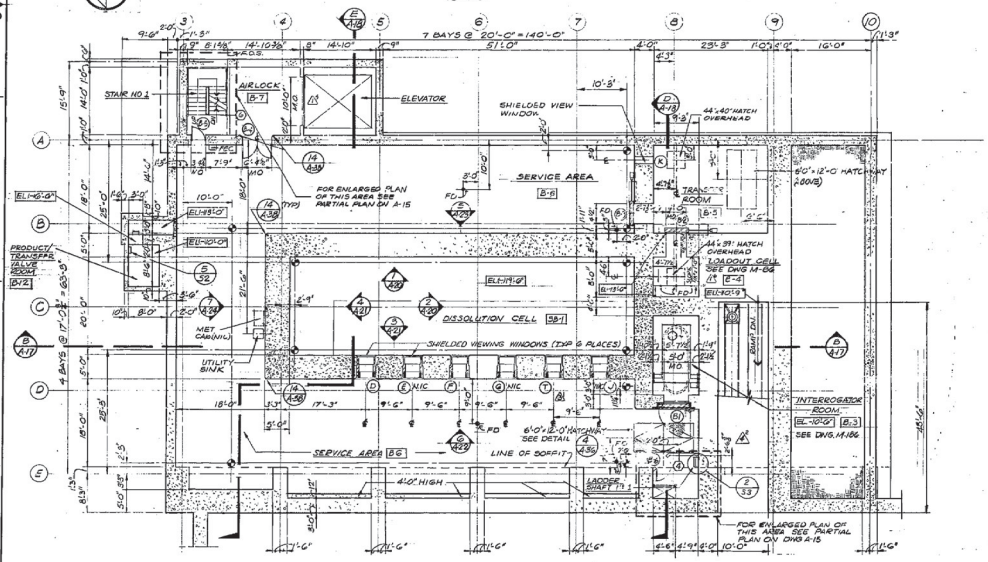

ENLARGED PARTIAL PLAN FIN FL REFERENCE EL-13'-0" (UNLESS OTHERWISE NOTED)
1/8" = 1'-0"

APPROVED FOR CONSTRUCTION

REFERENCE EL 0'-0" = TRUE EL 4918.00 FT.

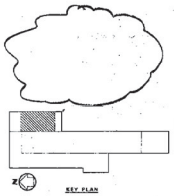

NO	DATE	REVISIONS	BY	CHK	APPD
6	10-19-78	ACTIVATE PER DCN # 152058-A82, 58	JOM		
5	10/14/77	REVISED PER DCN # 107112-204	J.T.C.	CDM	
4	7-11-77	AS BUILT PER NCR 61F524			
3	10/26/76	REV. PER RDF RNA 520			
2	11-18-75	REVISED PER ECR 153, DCN 582			
1	9-29-75	REVISED PER ECR 114, DCN 454			

DESIGNED J.S. Kyan 11/6/77
DRAWN K.D. Hayashi 11/6/77
CHECKED J.S. Kyan 11/23/77
APPROVED J.J. Jones
APPROVALS

DRAWN	BY	DATE
ACC		

THE RALPH M. PARSONS COMPANY
ARCHITECTS-ENGINEERS
PASADENA, CALIFORNIA
CEC

U.S. ENERGY RESEARCH & DEVELOPMENT ADMINISTRATION
IDAHO OPERATIONS OFFICE
IDAHO FALLS, IDAHO

CPP AREA BUILDING NO. CPP-666
FLUORINEL AND STORAGE FACILITY
ARCHITECTURAL
ENLARGED PARTIAL PLAN
EL-13'-0 -27'-0"-31-0"

SCALE: 1/8" = 1'-0"
DATE ISSUED: 1-15-73
DWG. NO. 1560-CPP-666-A-6 REV. NO. 6
PROJECT NO. 5585-5006

INDEX CODE NUMBER
AREA | TYPE | SYS | SEQ | REV.
2000066000693141700

FX

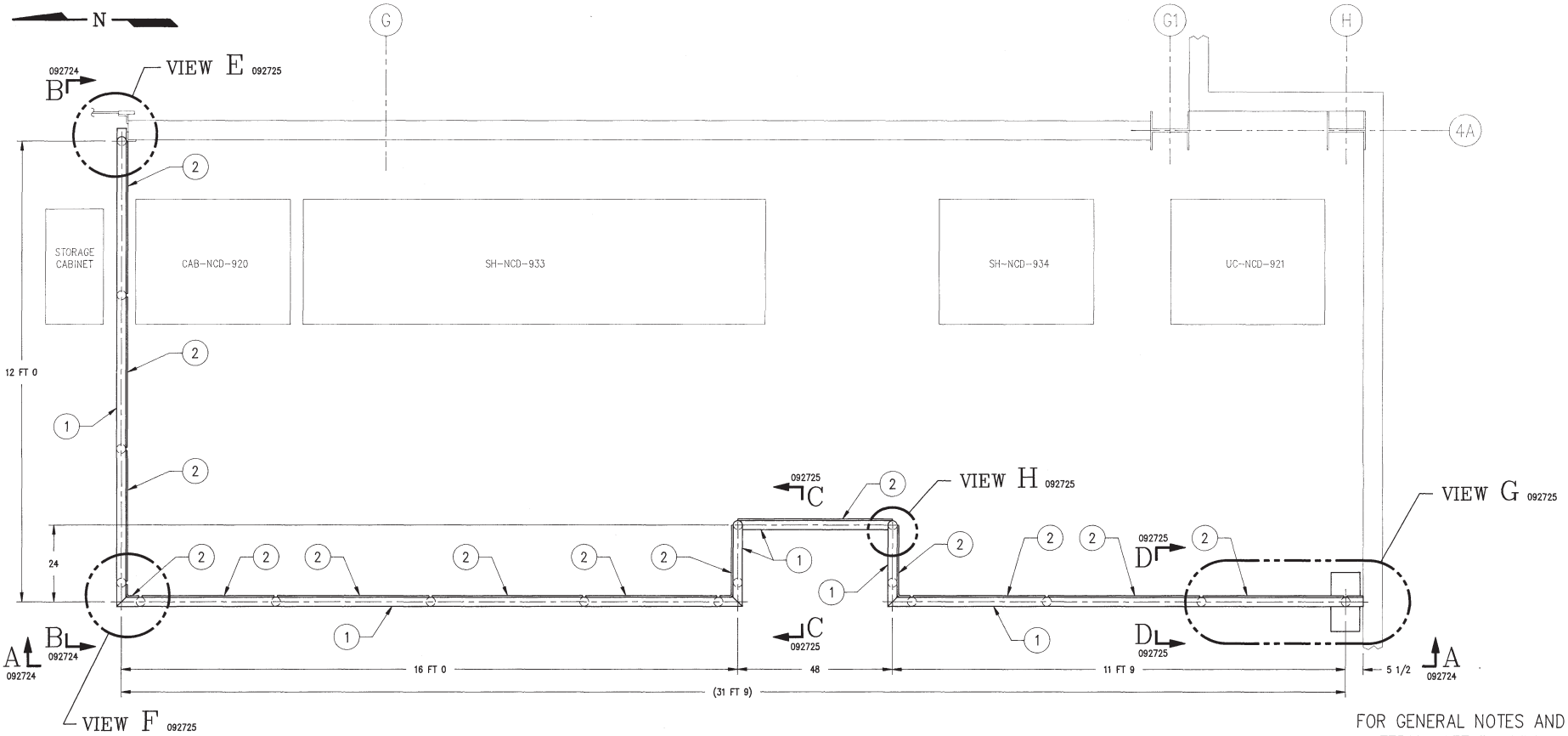

PLAN VIEW FIRST FLOOR
-1 ASSEMBLY

FOR GENERAL NOTES AND LIST OF MATERIAL SEE DRAWING 092725

NO.	REVISIONS	DRAFTER DATE	CHECKER DATE	DFTG SUPV DATE	SYS ENGR DATE
1	REVISED PER DCN # 138150-AB3	WH 10/12/92	10/12/92	10/12/92	11/13/92

CONTROLLED DOCUMENT CLASS I

DARK LINES INDICATE INSTALLATION

REFERENCE DRAWINGS:
092722 THRU 092725

PIPING DIMENSIONAL TOLERANCES
(UNLESS OTHERWISE SPECIFIED)

0" – 18"	18" – 36"	36" – 120"	OVER 120"
± 1/16"	± 1/8"	± 1/4"	± 1/2"

LINEAR DIMENSIONS UP TO AND INCLUDING 120 INCHES ARE EXPRESSED IN INCHES, THOSE GREATER ARE EXPRESSED IN FEET AND INCHES. INCH MARKS ARE OMITTED EXCEPT IN THE CASE OF 1, 6, OR 9 USED ALONE.

INSPECTION REQUIREMENTS
~~QC REQUIRED~~
QC NOT REQUIRED
~~QC DENOTES S/A, NOP, RFQS~~

APPROVALS	SIGNATURE	DATE
DRAFTER	Hudson	04/05/91
CHECKER	ERICKSON	07/10/91
DFTG SUPV	GTW	07/11/91
DESIGN ENGR	SPEARS	07/11/91
SYS ENGR	MONDOK	07/11/91
ENGR MGR	TRAXLER	07/11/91
PROJ MGR		

SCALE 3/4" = 1 FT 0
DATE ISSUED GTW 07/11/91

Westinghouse Idaho Nuclear Company Inc.
IDAHO CHEMICAL PROCESSING PLANT
IDAHO FALLS, IDAHO

FOR
U.S. DEPARTMENT OF ENERGY
IDAHO OPERATIONS OFFICE
IDAHO FALLS, IDAHO

INSTALLATION
CPP-659
ROOM # 415 CONTAMINATION
CONTROL BARRIER
PLAN VIEW -1 ASSEMBLY

NCD

DWG. SIZE	INDEX CODE NUMBER: AREA	DWG TYPE	CL	ORIG.	DRAWING NUMBER	REV.
D	200	0659	40	936	092723	1

JOB NUMBER 001854 TAKEN FROM DRAWING NO. NEW DWG

CAD GENERATED - AUTOCAD

NOTES:

1. WORK THIS DWG. WITH DWG. M-26
2. FOR GENERAL ARRANGEMENT SEE DWG. M-72 & M-86.
3. FOR MECHANICAL DETAILS OF WASTE TRANSFER SHIELDED BOX. SEE M-45.
4. FOR MECHANICAL DETAILS OF WASTE TRANSFER CASK SEE M-42.
5. FOR STRUCT DWG SEE DWG NO S-131 & S-136 FOR ARCHITECT DWG SEE DWG NO A-4 & A-10
6. FOR SPECIFICATION SEE M61-03 AND EQUIPMENT NO PLUG-FA-941
7. WELD LINER & IS PLACE EACH ON NORTH AND SOUTH SIDE OF HATCH OPENING AS INDICATED IN VIEW B/M-25.

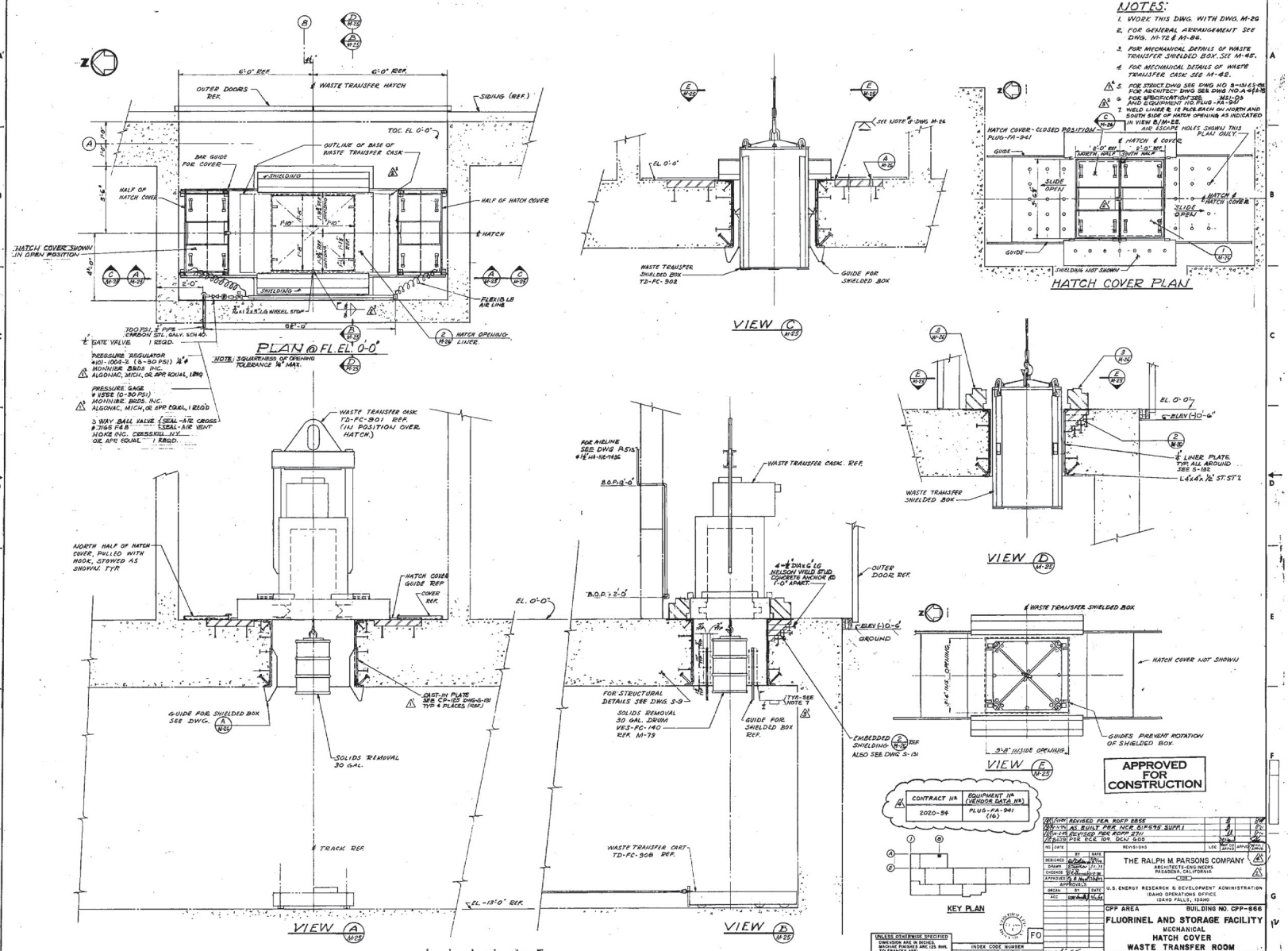

APPROVED FOR CONSTRUCTION

CONTRACT NR	EQUIPMENT NR (VENDOR DATA NR)
2020-54	PLUG-FA-941 (16)

NO	DATE	REVISIONS	DRN	CHK	APPROVED
4	11/14/78	REVISED PER RDFP 2855			
3	4/4/78	AS BUILT PER NCR DIF645 SURF.			
2	1/25/78	REVISED PER RDFP 2711			
1	8/31/77	PER ECR 109, DCN 609			

DESIGNED, DRAWN, CHECKED, APPROVED — BY / DATE

THE RALPH M. PARSONS COMPANY
ARCHITECTS-ENGINEERS
PASADENA, CALIFORNIA

U.S. ENERGY RESEARCH & DEVELOPMENT ADMINISTRATION
IDAHO OPERATIONS OFFICE
IDAHO FALLS, IDAHO

CPP AREA — BUILDING NO. CPP-666

FLUORINEL AND STORAGE FACILITY
MECHANICAL
HATCH COVER
WASTE TRANSFER ROOM

DWG NO 1560-CPP-666-M-25 — REV NO 4

UNLESS OTHERWISE SPECIFIED DIMENSION ARE IN INCHES. MACHINE FINISHES ARE 125 RMS. TOLERANCES ARE: FRACTIONS ±1/32, DECIMALS .XX ±.03, .XXX ±.005, ANGLES ±1°

INDEX CODE NUMBER: STD. DRW. TYPE | C | DRG. | SERIAL — 2000666 | 41693 | 42404

DATE ISSUED 3-16-79 — SCALE ½"=1'-0" — FO

PROJECT NO. 5586-5003

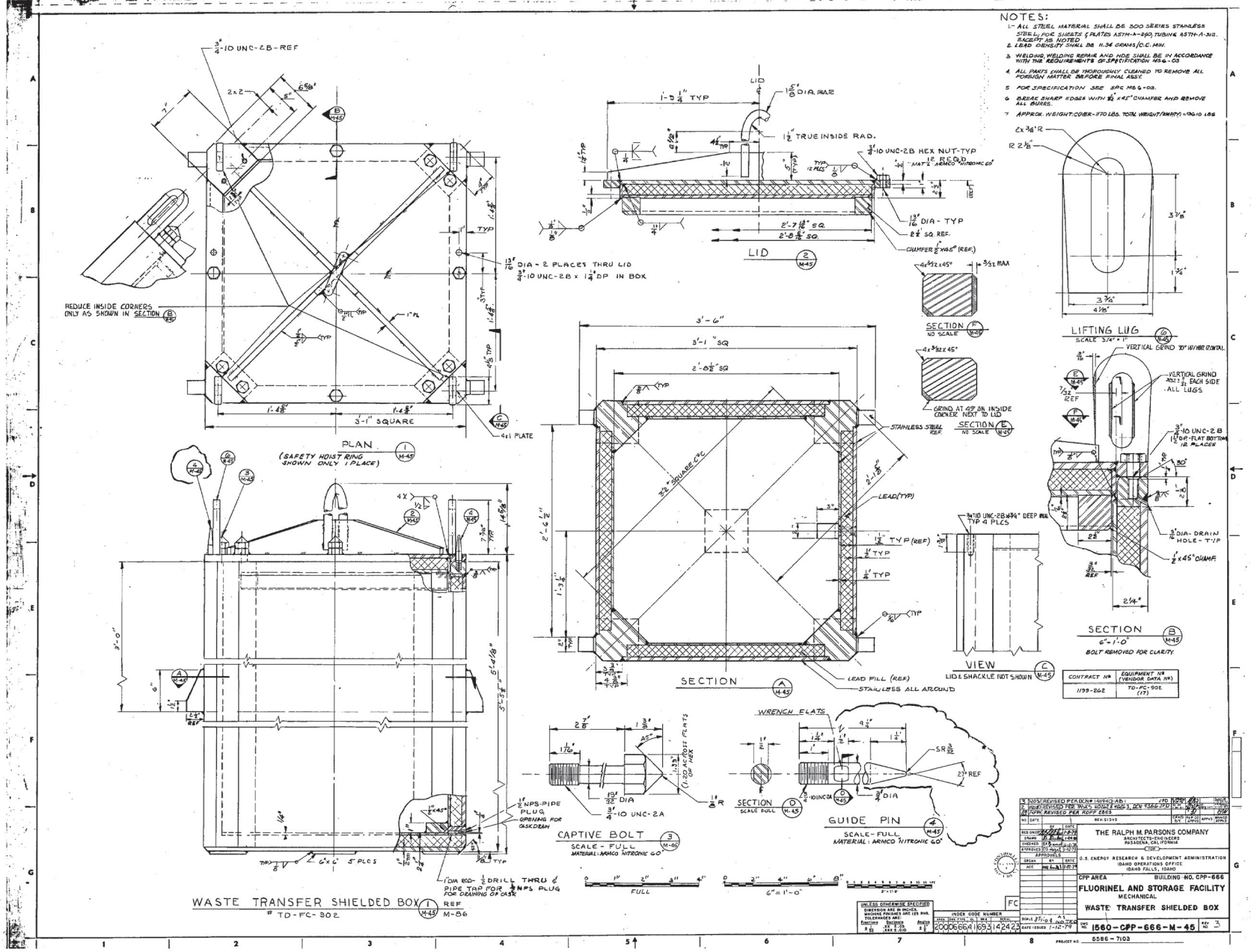
NOTES:
1. ALL STEEL MATERIAL SHALL BE 300 SERIES STAINLESS STEEL, FOR SHEETS & PLATES ASTM-A-240, TUBING ASTM-A-312, EXCEPT AS NOTED.
2. LEAD DENSITY SHALL BE 11.34 GRAMS/C.C. MIN.
3. WELDING, WELDING REPAIR AND HDE SHALL BE IN ACCORDANCE WITH THE REQUIREMENTS OF SPECIFICATION MS6-03
4. ALL PARTS SHALL BE THOROUGHLY CLEANED TO REMOVE ALL FOREIGN MATTER BEFORE FINAL ASS'Y.
5. FOR SPECIFICATION SEE SPC MS6-03.
6. BREAK SHARP EDGES WITH 1/16" x 45° CHAMFER AND REMOVE ALL BURRS.
7. APPROX. WEIGHT: COVER-1170 LBS. TOTAL WEIGHT/ENTITY ~9610 LBS
PLAN
(SAFETY HOIST RING SHOWN ONLY 1 PLACE)
REDUCE INSIDE CORNERS ONLY AS SHOWN IN SECTION B
3'-1" SQUARE
4x1 PLATE
LID
1-5 1/4" TYP
1 1/2" TRUE INSIDE RAD.
3/4"-10 UNC-2B HEX NUT-TYP
1 1/2" DIA - TYP
2'-7 13/16" SQ.
2'-8 5/16" SQ.
CHAMFER 1/8" x 45° (REF.)
13/16" DIA - 2 PLACES THRU LID
3/4"-10 UNC-2B x 1 1/4" DP IN BOX
SECTION
NO SCALE
LIFTING LUG
SCALE 3/4" = 1"
VERTICAL GRIND "D" W/WIRE DENTAL
VERTICAL GRIND 30±1 1/2 EACH SIDE - ALL LUGS
3/4"-10 UNC-2B 1 1/2" DP-FLAT BOTTOM 12 PLACES
3/16" DIA - DRAIN HOLE - TYP
1/8" x 45° CHAMF.
SECTION
6" = 1'-0"
BOLT REMOVED FOR CLARITY
3'-6"
3'-1" SQ
2'-8 5/16" SQ
STAINLESS STEEL REF.
LEAD (TYP)
1 1/2" TYP (REF)
LEAD FILL (REF)
STAINLESS ALL AROUND
SECTION
VIEW
LID & SHACKLE NOT SHOWN
CAPTIVE BOLT
SCALE - FULL
MATERIAL: ARMCO NITRONIC 60
GUIDE PIN
SCALE - FULL
MATERIAL: ARMCO NITRONIC 60
WRENCH FLATS
WASTE TRANSFER SHIELDED BOX
TD-FC-302
REF M-86
THE RALPH M. PARSONS COMPANY
ARCHITECTS-ENGINEERS
PASADENA, CALIFORNIA
U.S. ENERGY RESEARCH & DEVELOPMENT ADMINISTRATION
IDAHO OPERATIONS OFFICE
IDAHO FALLS, IDAHO
CPP AREA
BUILDING NO. CPP-666
FLUORINEL AND STORAGE FACILITY
MECHANICAL
WASTE TRANSFER SHIELDED BOX
1560-CPP-666-M-45
REV. 3
PROJECT NO. 5586-7103
CONTRACT NO. 1199-202
EQUIPMENT NO. (VENDOR DATA NO.) TD-FC-302 (17)
UNLESS OTHERWISE SPECIFIED
DIMENSION ARE IN INCHES.
MACHINE FINISHES ARE 125 RMS.
TOLERANCES ARE:
FRACTIONS ± 1/32
DECIMALS .XX ± .010 .XXX ± .005
ANGLES ± 1/2°
UNDER CODE NUMBER
200066641693142422
DATE ISSUED 1-12-79
SCALE 3/4" = 1"
FULL
6" = 1'-0"
2" = 1'-0"

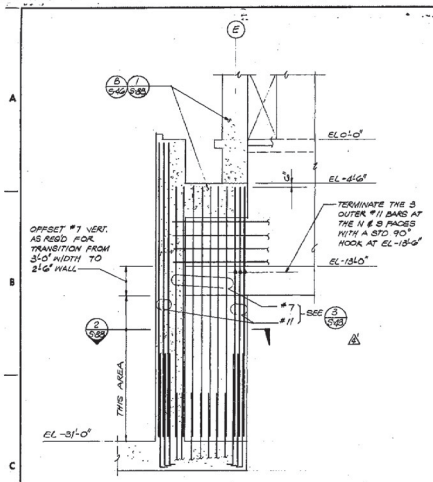

DETAIL 1 S-21
4" = 1'-0"

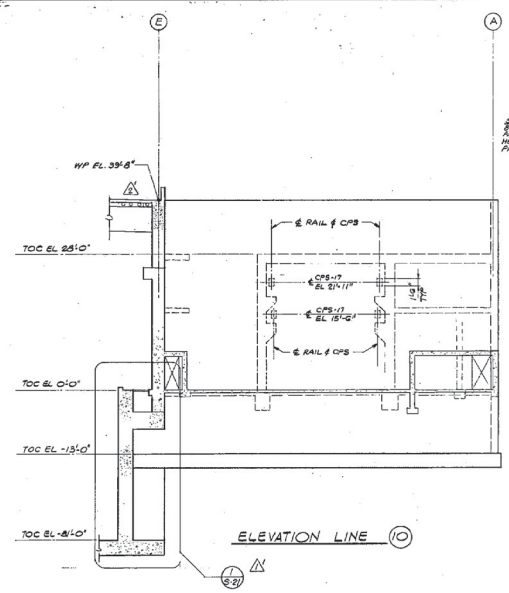

ELEVATION LINE 10

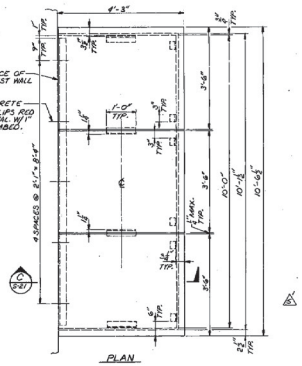

DETAIL 2 S-21 REF. S-9, A-16
NTS

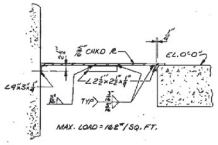

SECTION C S-21
NTS

SECTION D S-21 REF. S-9
N.T.S.

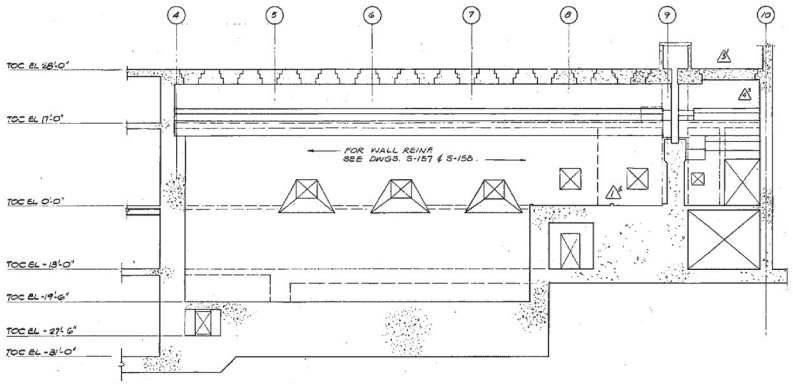

SECTION A S-21
REF. S-3, S-5, S-6, S-9, S-12, S-13

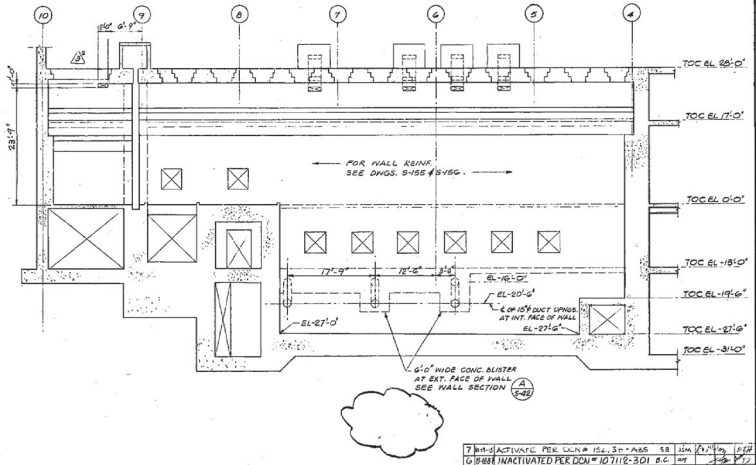

SECTION B S-21
REF. S-3, S-5, S-7, S-12, S-13

NOTE: FOR NOTES SEE DWG. S-13

APPROVED FOR CONSTRUCTION

REFERENCE EL 0'-0" = TRUE EL 4818.00 FT.

NO.	DATE	REVISIONS	DRN.	CHK.	APPROV.	APPROV.
7	8-11-71	INACTIVATE PER DCN # 15-L, 3-1-A&B	S.B.	JLM	R.L.T.	
6	5-8-71	INACTIVATED PER DCN # 107112-301	S.C.			
5		REVISED PER RCFP E/O(R) 2728				
4		REVISED PER RCFP E/O(R) 2677				
3	9-9-70	REVISED PER ECN-116, DCN-2010				
2	2-5-70	REVISED PER ECN-156, DCN-1786				
1		REVISED PER ECC 67, DCN 271				

	BY	DATE
DESIGNED		
DRAWN		
CHECKED		
APPROVED		
APPROVALS		
ORIGIN	BY	DATE
ACC		

THE RALPH M. PARSONS COMPANY
ARCHITECTS-ENGINEERS
PASADENA, CALIFORNIA

U.S. ENERGY RESEARCH & DEVELOPMENT ADMINISTRATION
IDAHO OPERATIONS OFFICE
IDAHO FALLS, IDAHO

CPP AREA — BUILDING NO. CPP-666

FLUORINEL AND STORAGE FACILITY

STRUCTURAL

DISSOLUTION CELL

WALL ELEVATIONS & SECTIONS SHT 1

SCALE: 3/8" = 1'-0"

DWG. NO. 1560-CPP-666-S-21 — REV. NO. 7

INDEX CODE NUMBER: 2000066626951435386

DATE ISSUED: 4-16-71

PROJECT NO. 5586-5007

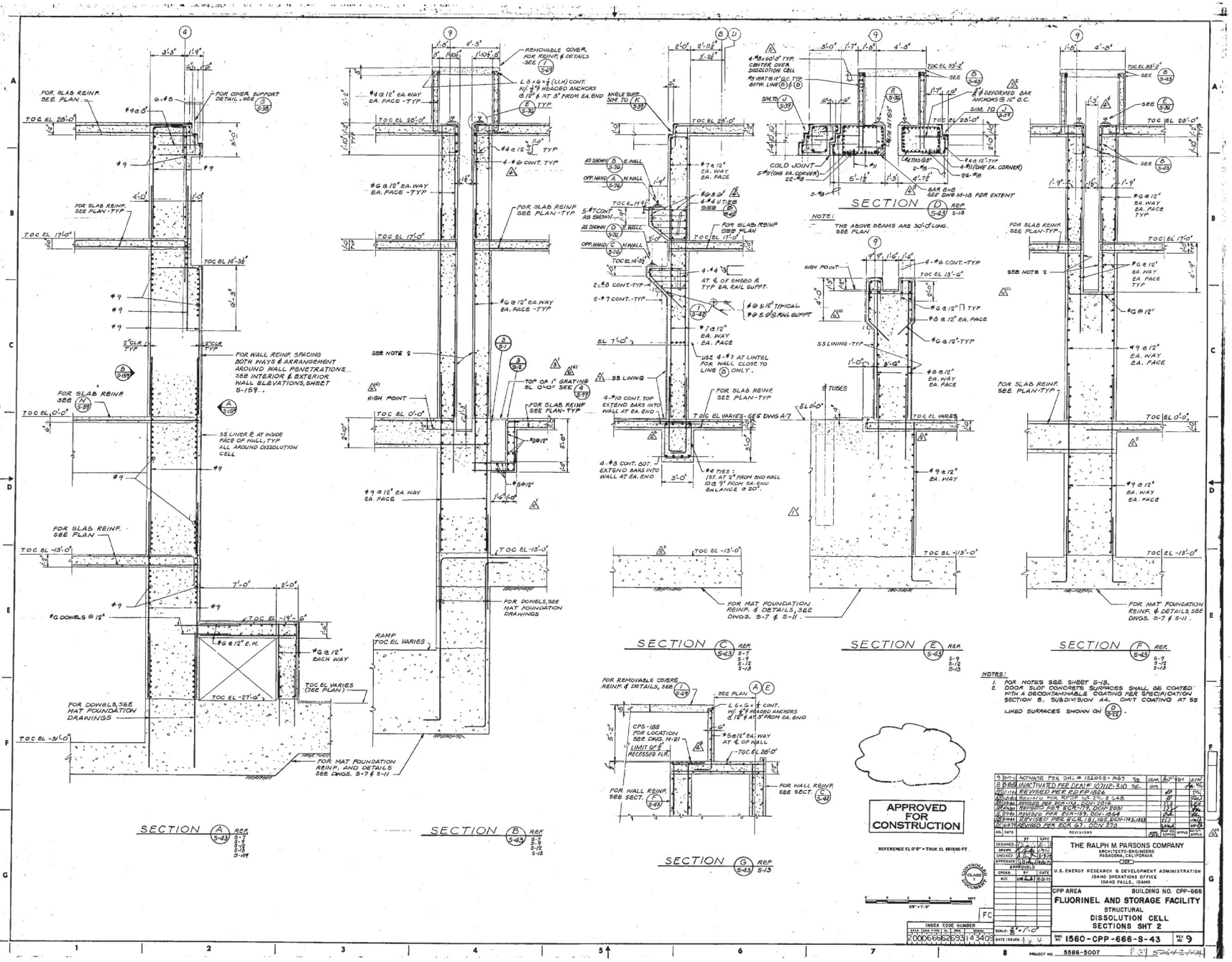
SECTION A REF S-43
SECTION B REF S-43
SECTION C REF S-43
SECTION D REF S-43
SECTION E REF S-43
SECTION F REF S-43
SECTION G REF S-43
NOTES:
1. FOR NOTES SEE SHEET S-13.
2. DOOR SLOT CONCRETE SURFACES SHALL BE COATED WITH A DECONTAMINABLE COATING PER SPECIFICATION SECTION 5, SUBDIVISION A4. OMIT COATING AT SS LINED SURFACES SHOWN ON D S-43.
APPROVED FOR CONSTRUCTION
REFERENCE EL 0'-0" = TRUE EL 4815.00 FT
THE RALPH M. PARSONS COMPANY
ARCHITECTS-ENGINEERS
PASADENA, CALIFORNIA
U.S. ENERGY RESEARCH & DEVELOPMENT ADMINISTRATION
IDAHO OPERATIONS OFFICE
IDAHO FALLS, IDAHO
CPP AREA
BUILDING NO. CPP-666
FLUORINEL AND STORAGE FACILITY
STRUCTURAL
DISSOLUTION CELL
SECTIONS SHT 2
1560-CPP-666-S-43
REV NO 9
PROJECT NO. 5586-5007

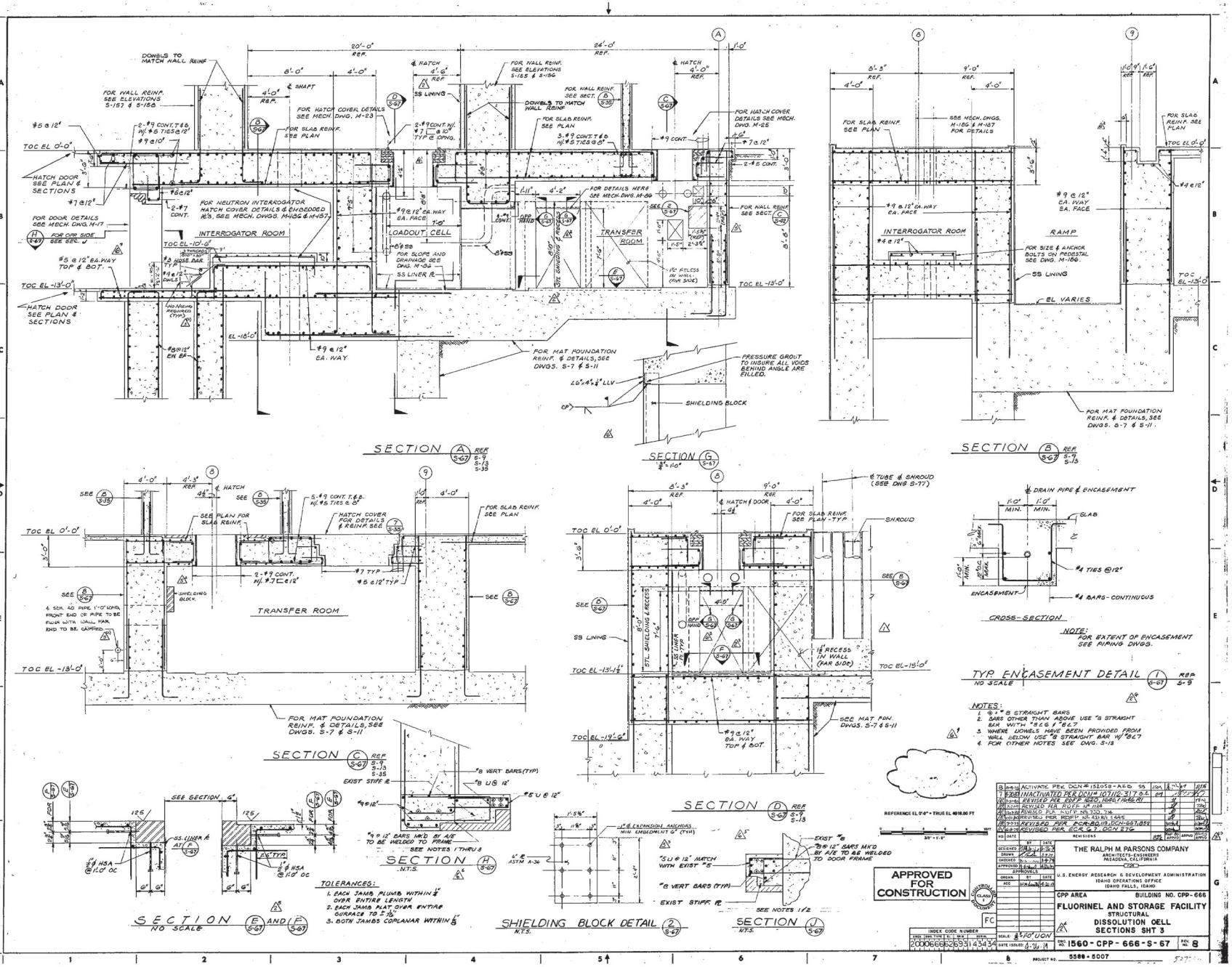
SECTION A REF S-9 S-13 S-35
SECTION G
SECTION B REF S-9 S-13
SECTION C REF S-9 S-13 S-35
SECTION D REF S-9 S-13
SECTION H N.T.S.
SECTION E AND F NO SCALE
SHIELDING BLOCK DETAIL N.T.S.
SECTION J N.T.S.
TYP ENCASEMENT DETAIL NO SCALE
CROSS-SECTION
NOTE: FOR EXTENT OF ENCASEMENT SEE PIPING DWGS.
NOTES:
1. @ = #8 STRAIGHT BARS
2. BARS OTHER THAN ABOVE USE #8 STRAIGHT BAR WITH #8@6 & #6@7
3. WHERE DOWELS HAVE BEEN PROVIDED FROM WALL BELOW USE #8 STRAIGHT BAR W/ #6@7
4. FOR OTHER NOTES SEE DWG. S-13
TOLERANCES:
1. EACH JAMB PLUMB WITHIN 1/4" OVER ENTIRE LENGTH
2. EACH JAMB FLAT OVER ENTIRE SURFACE TO 1/16"
3. BOTH JAMBS COPLANAR WITHIN 1/8"
INTERROGATOR ROOM
LOADOUT CELL
TRANSFER ROOM
RAMP
SS LINING
SHIELDING BLOCK
FOR MAT FOUNDATION REINF. & DETAILS, SEE DWGS. S-7 & S-11
PRESSURE GROUT TO INSURE ALL VOIDS BEHIND ANGLE ARE FILLED.
REFERENCE EL 0'-0" = TRUE EL 4918.00 FT
APPROVED FOR CONSTRUCTION
THE RALPH M. PARSONS COMPANY
ARCHITECTS-ENGINEERS
PASADENA, CALIFORNIA
U.S. ENERGY RESEARCH & DEVELOPMENT ADMINISTRATION
IDAHO OPERATIONS OFFICE
IDAHO FALLS, IDAHO
CPP AREA
BUILDING NO. CPP-666
FLUORINEL AND STORAGE FACILITY
STRUCTURAL
DISSOLUTION CELL
SECTIONS SHT 3
1560-CPP-666-S-67
REV. NO. 8
PROJECT NO. 5586-5007

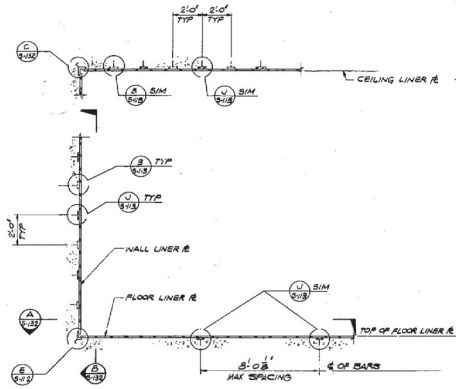

TYPICAL SECTION
3/8" = 1'-0"

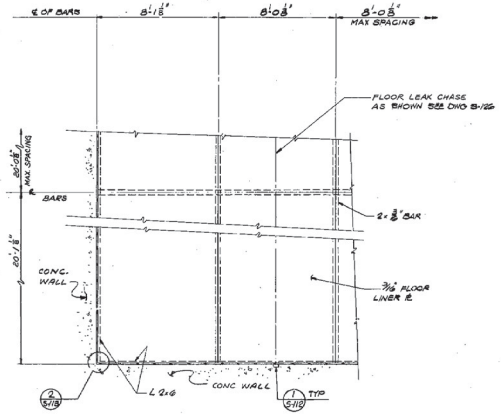

FLOOR PLAN
3/8" = 1'-0"

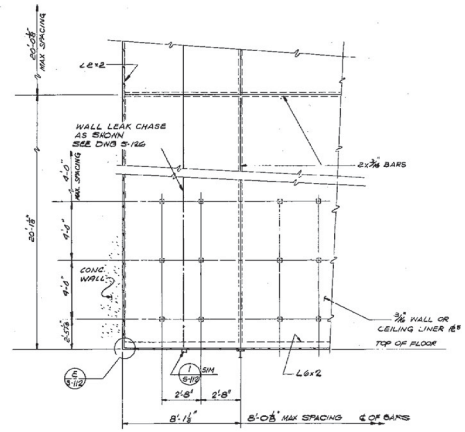

WALL ELEVATION
3/8" = 1'-0"

CEILING PLAN SIMILAR

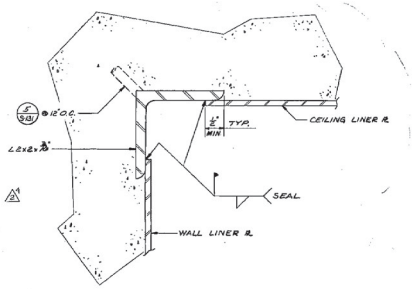

DETAIL
FULL SCALE

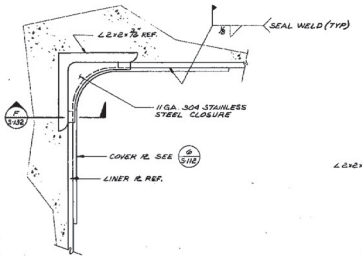

VIEW
FULL SCALE
REF DWG. S-111 S-112 S-150

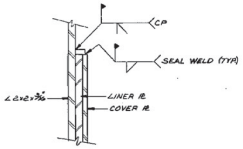

SECTION
FULL SCALE

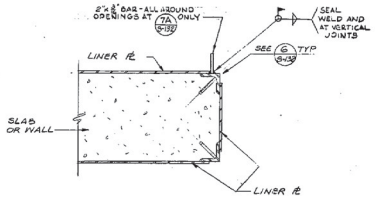

TYP RECT. OR SQUARE OPENING DETAIL UON
3" = 1'-0"

NOTES:

1. FOR NOTES SEE DRAWING S-111
2. FOR LOCATION OF LINER PLATES AND TOP OF WAINSCOT SEE ARCHITECTURAL DWG A-18

APPROVED FOR CONSTRUCTION

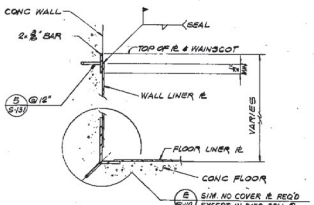

TYP WAINSCOT DETAIL UON
3" = 1'-0"

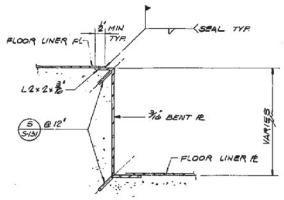

TYP CURB DETAIL UON
3" = 1'-0"

NO	DATE	REVISIONS	DWN	APPD
5	8-27-80	INACTIVATE PER DNC# 152038-A03	SG	
4	8-21-80	INACTIVATED PER DCN# 109500-971	JPD	
3	11-7-79	REVISED PER RDFP 284IRE		
2	10-25-79	REVISED PER RDFP DEF. 2399.81		
1	7-3-80	REVISED PER ECR.151, DCN 1640		

	BY	DATE
DESIGNED		
DRAWN		
CHECKED		
APPROVED		

APPROVALS

ORGAN	BY	DATE
AEC		

THE RALPH M. PARSONS COMPANY
ARCHITECTS-ENGINEERS
PASADENA, CALIFORNIA

U.S. ENERGY RESEARCH & DEVELOPMENT ADMINISTRATION
IDAHO OPERATIONS OFFICE
IDAHO FALLS, IDAHO

CPP AREA — BUILDING NO. CPP-666

FLUORINEL AND STORAGE FACILITY

STRUCTURAL
TYPICAL LINER PLATE
PLAN, ELEVATION, SECTION & DETAILS

SCALE: AS SHOWN
DATE ISSUED: 12-27-78
DWG. NO. 1560-CPP-666-S-132
REV. NO. 5

INDEX CODE NUMBER
2000666626931 43493

PROJECT NO. 5586-5007

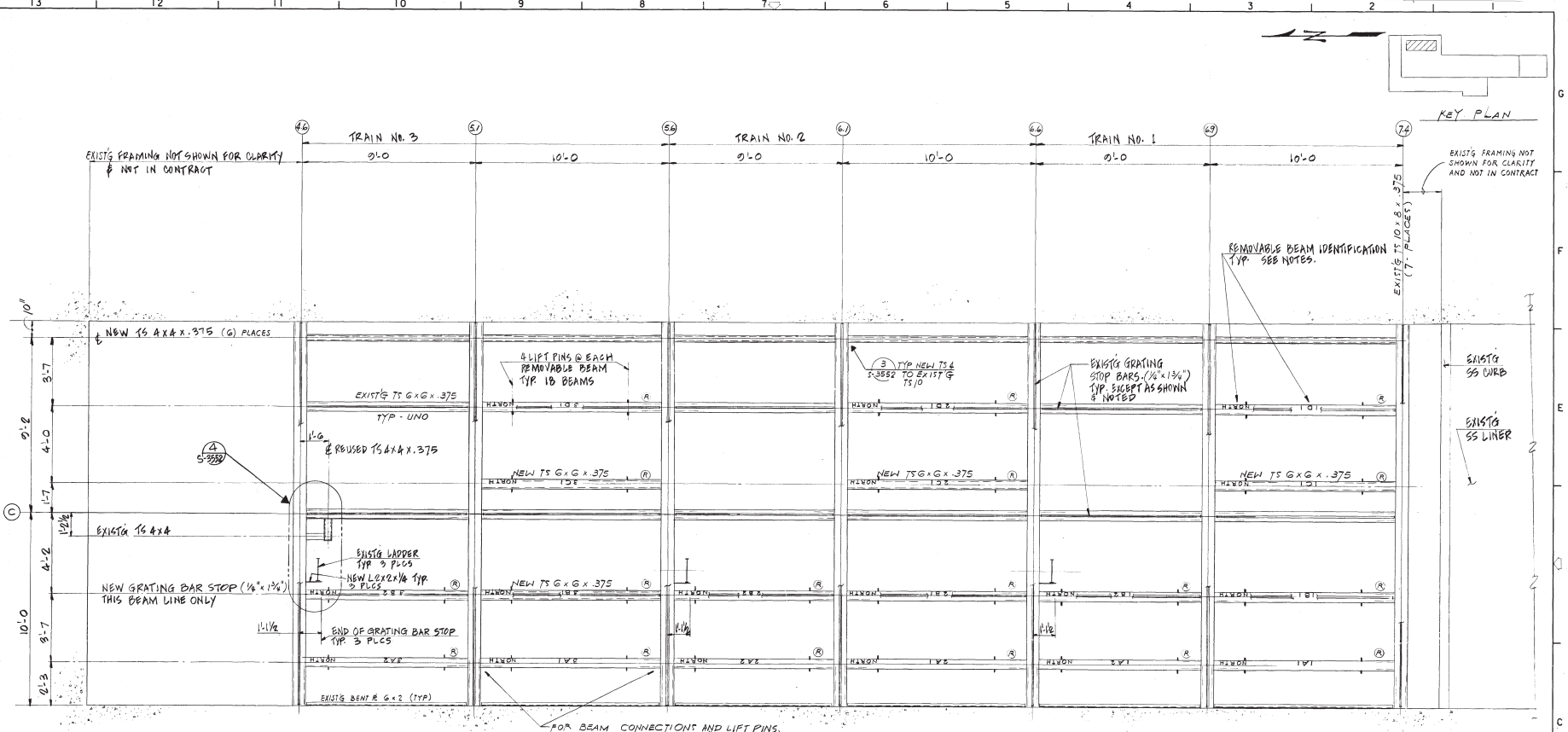

LEGEND

(R) = BEAMS SHALL BE MODIFIED TO A REMOVABLE TYPE

PLAN - T.O.S. EL. (-) 0'-2"

MODIFIED FRAMING PLAN (MAJOR FRAMING SHOWN ONLY)

NOTES:

1. EXISTING DIMENSIONS AND ELEVATIONS ARE FOR REFERENCE ONLY AND MUST BE FIELD VERIFIED BY SUBCONTRACTOR PRIOR TO MODIFICATION OR FABRICATION.
2. SUBCONTRACTOR SHALL TAKE CARE NOT TO DAMAGE EXISTING EQUIPMENT OR STRUCTURES. DAMAGED ITEMS SHALL BE RESTORED TO THEIR ORIGINAL CONDITION BY THE SUBCONTRACTOR.
3. ALL STEEL SHALL BE STAINLESS PER SPECIFICATION 30000-ST1, STRUCTURAL STEEL.
4. WELDING SHALL BE PER SPECIFICATION 30000-W1, STRUCTURAL WELDING. ALL WELDS SHALL BE VISUALLY INSPECTED. ALL WELDS TO BE SEALED TO PREVENT ANY CONTAMINATION TRAPS.
5. FABRICATION AND ERECTION TOLERANCE SHALL BE ± 1/16 INCH, UNLESS NOTED OTHERWISE.
6. THE CENTER OF GRAVITY OF THE REMOVABLE BEAMS SHALL BE DETERMINED AFTER BEAM MODIFICATIONS ARE COMPLETE EXCEPT INSTALLATION OF LIFT PINS. LIFT PINS SHALL THEN BE INSTALLED CENTERED AROUND THE ACTUAL BEAM CENTER OF GRAVITY AS SHOWN.
7. FOR BEAM REMOVAL TOOL SEE DRAWING 30437-CPP-666-M-3570.
8. ALL GRATING BETWEEN COLUMN LINE, 4.6 AND 7.4 SHALL BE REMOTELY REMOVABLE. THIS REQUIRES ALL GRATING TO HAVE 1/4 INCH DIAMETER CROSS BARS AS CALLED OUT IN SPECIFICATION 30000-ST1 TO FIT THE REMOVAL TOOL. SUBMIT GRATING SAMPLE AS CALLED OUT IN SPECIFICATION 30437-MS-S49, TO VERIFY COMPATIBILITY WITH GRATING REMOVAL TOOL.
9. GRATING TO BE REUSED SHALL BE FLAT WITHIN 1/8 INCH IN 2 FEET OR 1/4 INCH IN 5 FEET IN ANY DIRECTION. BEARING BARS AND CROSS BARS SHALL BE WHOLE AND UNCUT. ENDS AND ANY NEW CUTOUTS SHALL BE BANDED PER SPECIFICATION 30000-ST1.
10. NEW GRATING PANELS SHALL HAVE 1/4 INCH CLEARANCE AT GRATING STOP BARS AND CELL WALLS AND 1/4 INCH TO 1/2 INCH CLEARANCE BETWEEN PANELS. GRATING PANELS WHICH ARE NOT DIMENSIONED SHALL HAVE A WIDTH BETWEEN 24 INCHES AND 36 INCHES. GRATING IS NOT TO HAVE ANY CLIPS HOLDING IT IN PLACE.
11. REMOVABLE BEAMS SHALL BE MARKED WITH THE IDENTIFICATION NUMBER SHOWN AT THE CENTER OF THE BEAM AND THE COMPASS DIRECTION AT THE NORTH END OF THE BEAM. THE IDENTIFICATION IS TO BE READABLE FROM THE WINDOWS ON THE EAST SIDE OF THE FDP CELL. THE LETTERS ARE TO BE 1-1/2 INCHES HIGH AND MARKED WITH PUNCH MARKS SPACED AT 1/4 INCH. USE ROUND ENDED PUNCH 1/16 INCH TO 1/8 INCH DIAMETER.
12. GRATING PANELS SHALL BE MARKED WITH THE IDENTIFICATION NUMBER AS SHOWN ON DRAWING 30437-CPP-666-S-3550. THE IDENTIFICATION IS TO BE READABLE FROM THE WINDOWS ON THE EAST SIDE OF THE FDP CELL. THE LETTERS ARE TO BE 1-1/2 INCH HIGH, MARKED WITH A WELD BEAD ON A 1/8 INCH THICK BY 3 INCH BY 5 INCH STAINLESS PLATE. THIS PLATE TO BE TACK WELDED ON TOP OF THE GRATING PANEL IN THE POSITION SHOWN.
13. SEE SCHEDULE "X" FOR GOVERNMENT FURNISHED EQUIPMENT AND MATERIALS (GFE).
14. WORK SHALL BE APPROVED BY TITLE III INSPECTION PRIOR TO OPERATIONS WHICH WOULD MAKE AREAS INACCESSABLE AND AT CONCLUSION OF WORK BEFORE FINAL RELEASE.
15. PLATFORM AT EL 0'-0" DESIGNED TO 1'-8" DROP OF 850 POUND OBJECT, 1'-2" DROP OF 1350 POUND OBJECT OR 500 POUNDS PER SQUARE FOOT STATIC UNIFORM LOAD.

REV	DATE	DESCRIPTION
2	10-1-87	ACTIVATE PER DCN # 152058-AB10
1	8/19/87	REVISED PER DCN # 107112-275

DRAWN BY: BERVIN 11-14-86
DESIGN: EFH
INDEX: H. ALFARO
SUPERVISOR: K. FRIEZE 11-14-86
PROJECT ENGINEER: E. HATCH-S 11-14-86
MECH. DISC.: J. BRAGANZA 11-14-86
CIVIL: N. [illegible]
DRAWING CHECK: APP.
APP. DATE

INDEX CODE NUMBER: 2000666612B7149885

QUALITY LEVEL II **TITLE II**

FOR DRAWING INDEX SEE DRAWING NO. 30437-CPP-666-T-3547

FLUOR
CONTRACT NO. 842304
FOR
U.S. DEPARTMENT OF ENERGY
IDAHO OPERATIONS OFFICE
IDAHO FALLS, IDAHO
CONTRACT DE-AC07-84IC12401

CPP AREA — BLDG CPP-666

FDP CELL GRATING MODIFICATIONS

STEEL FRAMING PLAN @ EL (-) 0'-2

SIZE: E — INDEX CODE NUMBER: AREA / DWG. TYPE / CL / ORIG — DRAWING NO. 30437 — REV 2
SPEC CODE — CPP-666-S-3549
SCALE: 1/2" = 1'-0 — WORK REQUEST NO. 85-31 — A/E SHEET NO.

FORM 842036-A 6/85

CONTROLLED DOCUMENT CLASS 1 DECEMBER

30437-CPP-666-S-3549 R.0

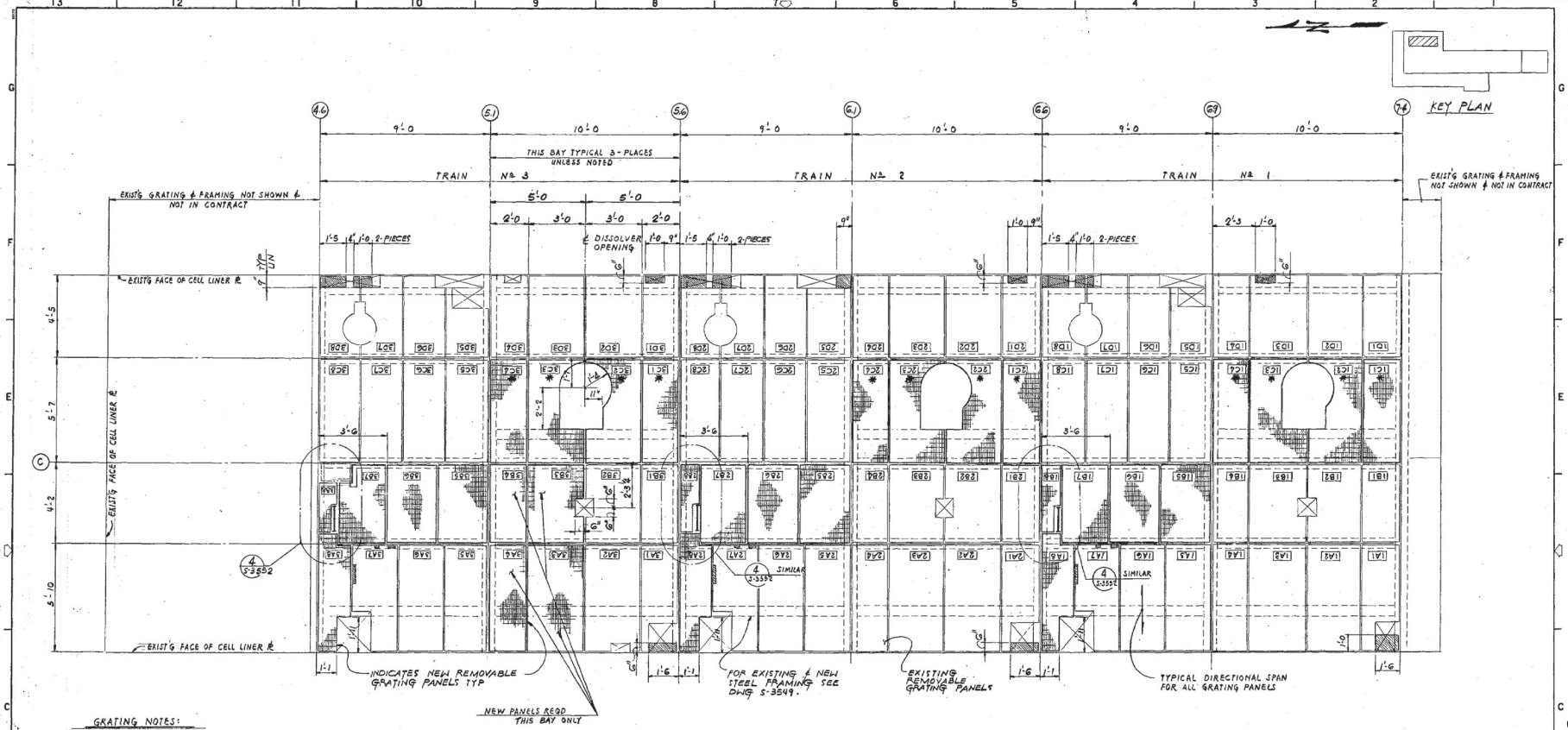

GRATING NOTES:

ALL GRATING SHALL BE 2"x 3/16", BEARING BARS @ 15/16" O.C. (TYP UNLESS NOTED)

* - GRATING 2"x 3/8", BEARING BARS @ 15/16" O.C.

▒ - INDICATES AREAS OF EXISTING GRATING CUTOUTS TO BE PATCHED. SEE TYP GRATING PATCH DETAIL DWG S-3552.

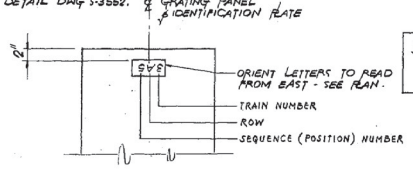

TYPICAL GRATING PANEL IDENTIFICATION

FOR LOCATION OF IDENTIFICATION RATE ON NEW OR EXISTING GRATING PANELS SEE PLAN.

PLAN T.O. GRATING EL. 0'-0

MODIFIED GRATING PLAN

SUB CONTRACTOR SHALL FIELD VERIFY ALL DIMENSIONS BEFORE THE FABRICATION OF GRATING PANELS AND SUPPORT BEAMS

NOTE:

FOR NOTES SEE DRAWING 30437-CPP-666-S-3549.

QUALITY LEVEL II TITLE II

FOR DRAWING INDEX SEE DRAWING NO. 30437-CPP-666-T-3547

FLUOR CONTRACT NO. 840204

FOR

U.S. DEPARTMENT OF ENERGY
IDAHO OPERATIONS OFFICE
IDAHO FALLS, IDAHO
CONTRACT DE-AC07-84ID12401

CPP AREA BLDG CPP-666

FDP CELL GRATING MODIFICATIONS

GRATING PLAN @ EL 0'-0

CONTROLLED DOCUMENT CLASS I FC

INDEX CODE NUMBER: 2000666612871498866

REV	DATE	REVISION DESCRIPTION	DRAWN	CHECKED	APP.
2	10-11-93	ACTIVATE PER DCN # 152058-A&11			
1	8/19/92	REVISED PER DCN # 107112-278			

DESIGNED BERVIN EAST 11-14-85
DRAWN NAKATEGE 11-14-85
CHECKED 11-14-85
PROJECT ENGR. 11-15-85
PROJECT MGR. 11-15-85

SIZE E | INDEX CODE NUMBER: AREA, DWG TYPE, EL, GRID | DRAWING NO. 30437 CPP666-S-3550 | REV. 2

SCALE 1/2 = 1'-0 | SPEC CODE | WORK REQUEST NO. 85-31 | A/E SHEET NO.

DISTRIBUTION CODE:

FORM 840204-A 6/85

30437-CPP-666-S-3550 R.0

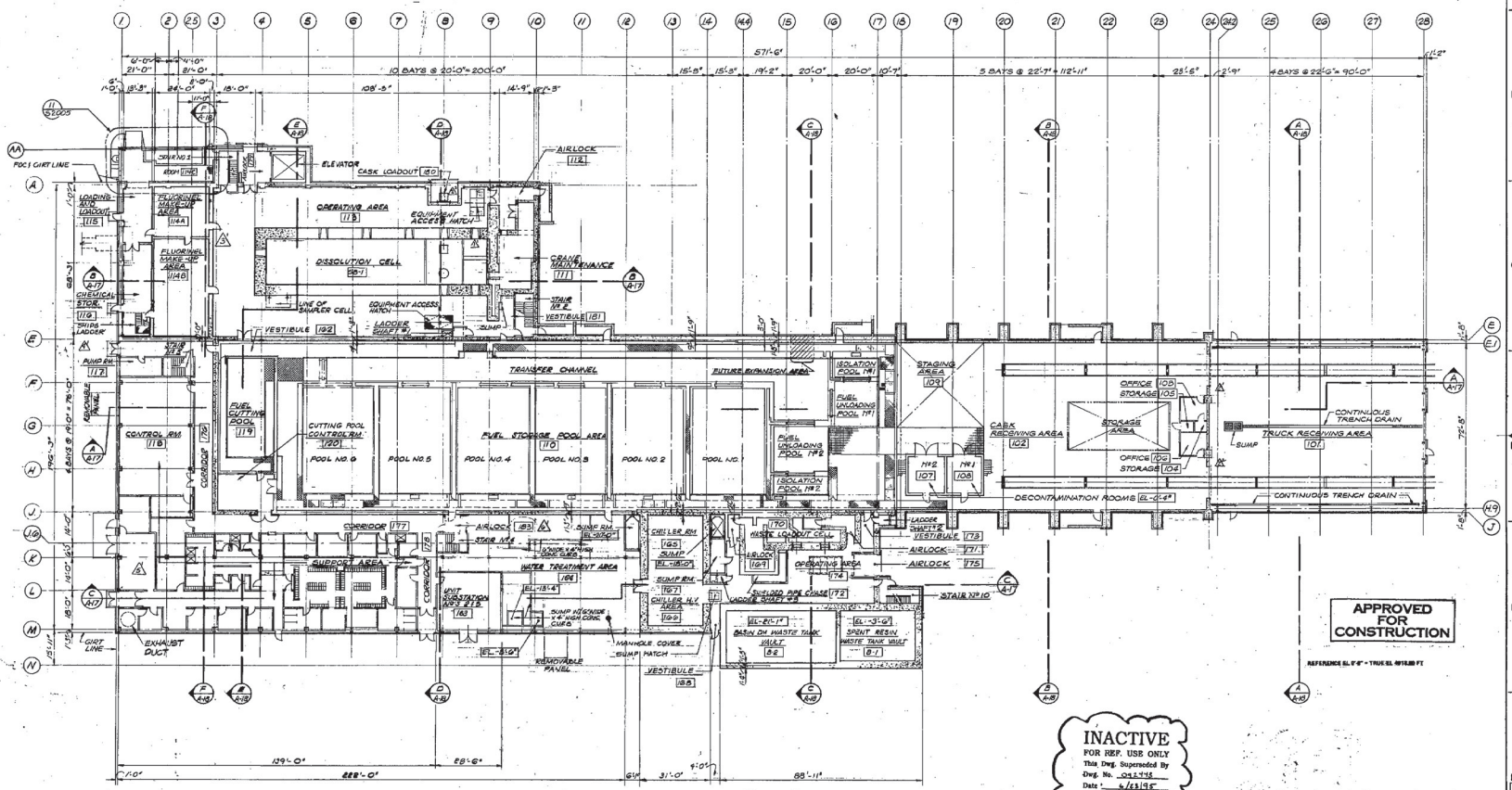

FLOOR PLAN FIN FL REF EL 0'-0" (UNLESS OTHERWISE NOTED)

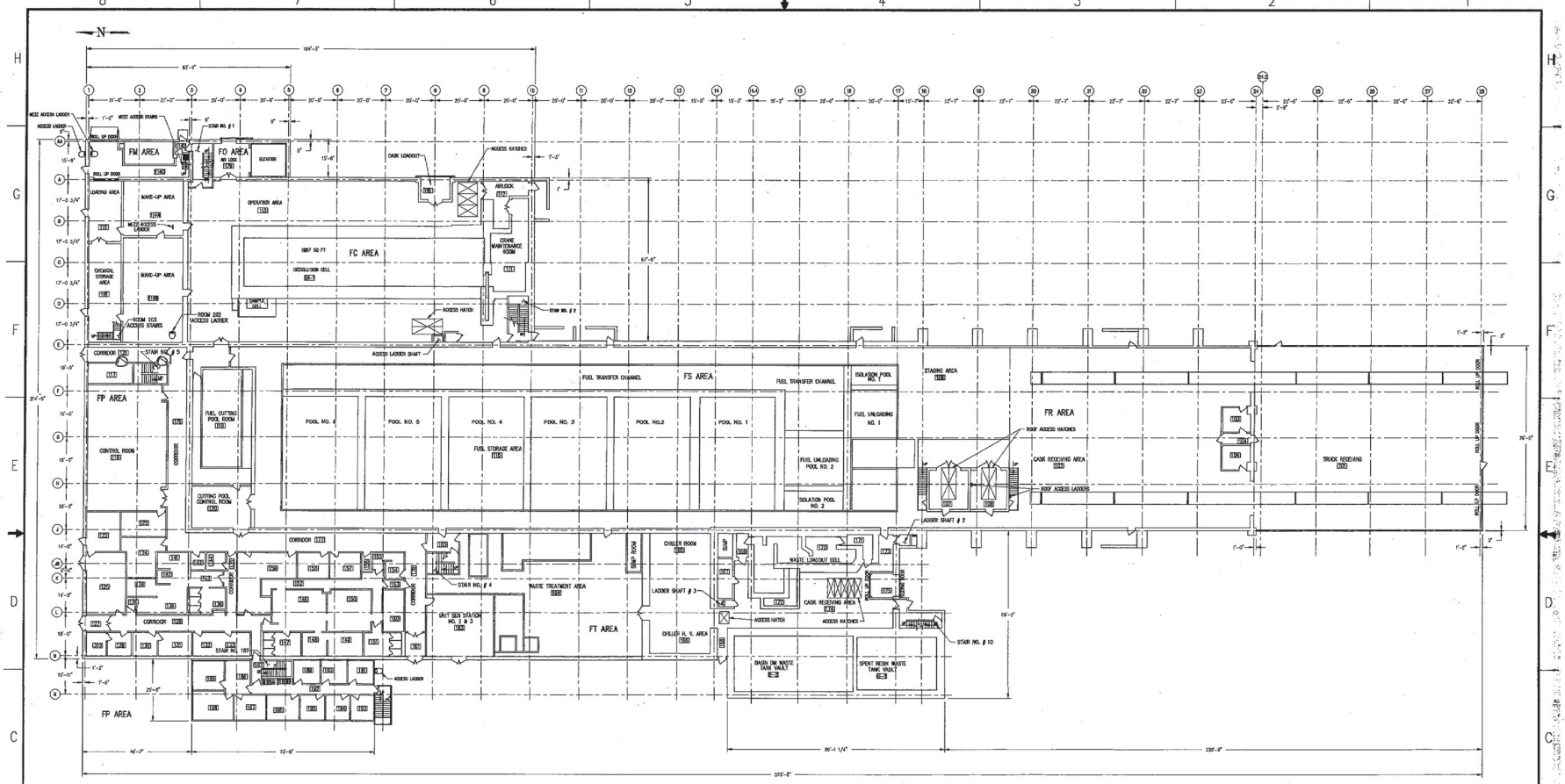

ROOM NO.	TITLE	SQUARE FOOT	ROOM NO.	ROOM TITLE	SQUARE FOOT	ROOM NO.	ROOM TITLE	SQUARE FOOT
101	TRUCK RECEIVING AREA	7,050	134	–	–	169	AIRLOCK ROOM	48
102	CASK RECEIVING AREA	8,735	135	CORRIDOR	111	170	WASTE LOADOUT CELL	523
103	OFFICE ROOM	112	136	WOMEN'S ROOM	148	171	AIRLOCK ROOM	80
104	CORRIDOR	50	137	–	–	172	PIPE CHASE AREA	84
105	–	–	138	WOMEN'S LOCKER ROOM	200	173	VESTIBULE	89
106	OFFICE ROOM	113	139	WOMEN'S LOCKER ROOM	85	174	CASK RECEIVING AREA	902
107	DECON. ROOM NO. 2	256	140	WOMEN'S SHOWER AREA	45	175	AIRLOCK ROOM	87
108	DECON ROOM NO.1	245	141	WOMEN'S CHANGE ROOM	62	176	CORRIDOR	577
109	STAGING AREA	1,728	142	JANITOR ROOM	42	177	CORRIDOR	624
110	FUEL STORAGE AREA	30,523	143	VESTIBULE	86	178	CORRIDOR	335
111	CRANE MAINTENANCE AREA	455				179	AIRLOCK ROOM	201
112	AIRLOCK ROOM	211	144	OFFICE ROOM	62	180	–	–
113	OPERATION AREA	4,771	145	–	–	181	–	–
114A	MAKE-UP AREA	545	146	MEN'S CHANGE ROOM	402	182	–	–
114B	MAKE-UP AREA	1,048	147	MEN'S ROOM	153	183	AIR LOCK ROOM	101
114C	MAKE-UP AREA	563	148	MEN'S DRYING AREA	98	184	–	–
114D	MAKE-UP AREA	26	149	MEN'S SHOWER ROOM	144	185	OFFICE ROOM	137
115	LOADING AREA	33	150	MEN'S CHANGE ROOM	307	186	OFFICE ROOM	140
116	CHEMICAL STORAGE AREA	474	151	MEN'S ROOM	167	187	STAIRWAY	121
117	PUMP ROOM	163	152	CORRIDOR	200	188A	CLOSET ROOM	15
118	CONTROL ROOM	1,640	153	VESTIBULE	25	188B	CLOSET ROOM	15
119	FUEL CUTTING POOL ROOM	1,148	154	MEN'S H. P. SHOWER AREA	76	189	–	–
120	CUTTING POOL CONTROL ROOM	472	155	MEN'S DRYING AREA	14	190	OFFICE ROOM	132
121	CORRIDOR	201	156	JANITOR ROOM	30	191	OFFICE ROOM	101
122	U. P. S.	220	157	OFFICE ROOM	132	192	CORRIDOR	192
123	STORAGE ROOM	156	158	OFFICE ROOM	133	193	OFFICE ROOM	97
124	HEALTH PHYSICS ROOM	232	159	LUNCHROOM	302	194	OFFICE ROOM	101
125	UNIT SUB STATION NO. 1 ROOM	404	160	MEN'S CHANGE ROOM	142	195	OFFICE ROOM	101
126	VESTIBULE	15	161	AIRLOCK ROOM	81	196	OFFICE ROOM	136
127	AIRLOCK ROOM	68	162	–	–	197	OFFICE ROOM	139
128	CORRIDOR	396	163	UNIT SUB STATION NO 2 & 3 ROOM	699	198	OFFICE ROOM	143
129	STORAGE ROOM	97	164	WASTE TREATMENT AREA	3,435	–	ELEVATOR	186
130	OFFICE ROOM	99	165	CHILLER ROOM	1,206	–	–	–
131	OFFICE ROOM	134	166	CHILLER H. V. AREA	SAME AREA 165	–	–	–
132	OFFICE ROOM	113	167	SUMP ROOM	165	–	–	–
133	OFFICE ROOM	113	168	VESTIBULE	48	–	–	–

FIRST FLOOR PLAN ELEV. 0'-0

GENERAL NOTES:

1. TOTAL FLOOR AREA: 77,008 SQ. FT. FOOTAGE CALCULATED FROM INSIDE OF THE EXTERIOR WALLS.

NO.	REVISIONS	DRAWN	CHECKED	ENGINEER	DATE
4	REVISED PER DCN #57058-A020	ASB	JAS	JHT	10-22-90
3	REVISED PER DCN 155147-AB2	LPD(mb)	DKS	MEB	7-13-90

Westinghouse Idaho Nuclear Company Inc.
IDAHO CHEMICAL PROCESSING PLANT
IDAHO FALLS, IDAHO

FOR
U.S. DEPARTMENT OF ENERGY
IDAHO OPERATIONS OFFICE
IDAHO FALLS, IDAHO

CPP-666
SPACE OCCUPANCY
FIRST FLOOR PLAN

FC FR FM FS FO FT FP FV

APPROVALS	SIGNATURE	DATE
DRAFTER	ALBERNEDER	4/26/90
CHECKER	G.T.W	6/8/90
DFTG SUPV	G.T.W	6/26/90
DESIGN CHKR		
SYS ENGR	D.J.LP	6/26/90
CHGR MGR		
PROJ MGR		

SCALE 1/16 = 1FT 0
DATE ISSUED G.T.W 6/26/90

DWG. SIZE	INDEX CODE NUMBER: AREA	DWG TYPE	CL	DWG.	DRAWING NUMBER	REV.
F	200	0666	03	936	092443	4

JOB NUMBER 122820 TAKEN FROM DRAWING NO. NEW DWG

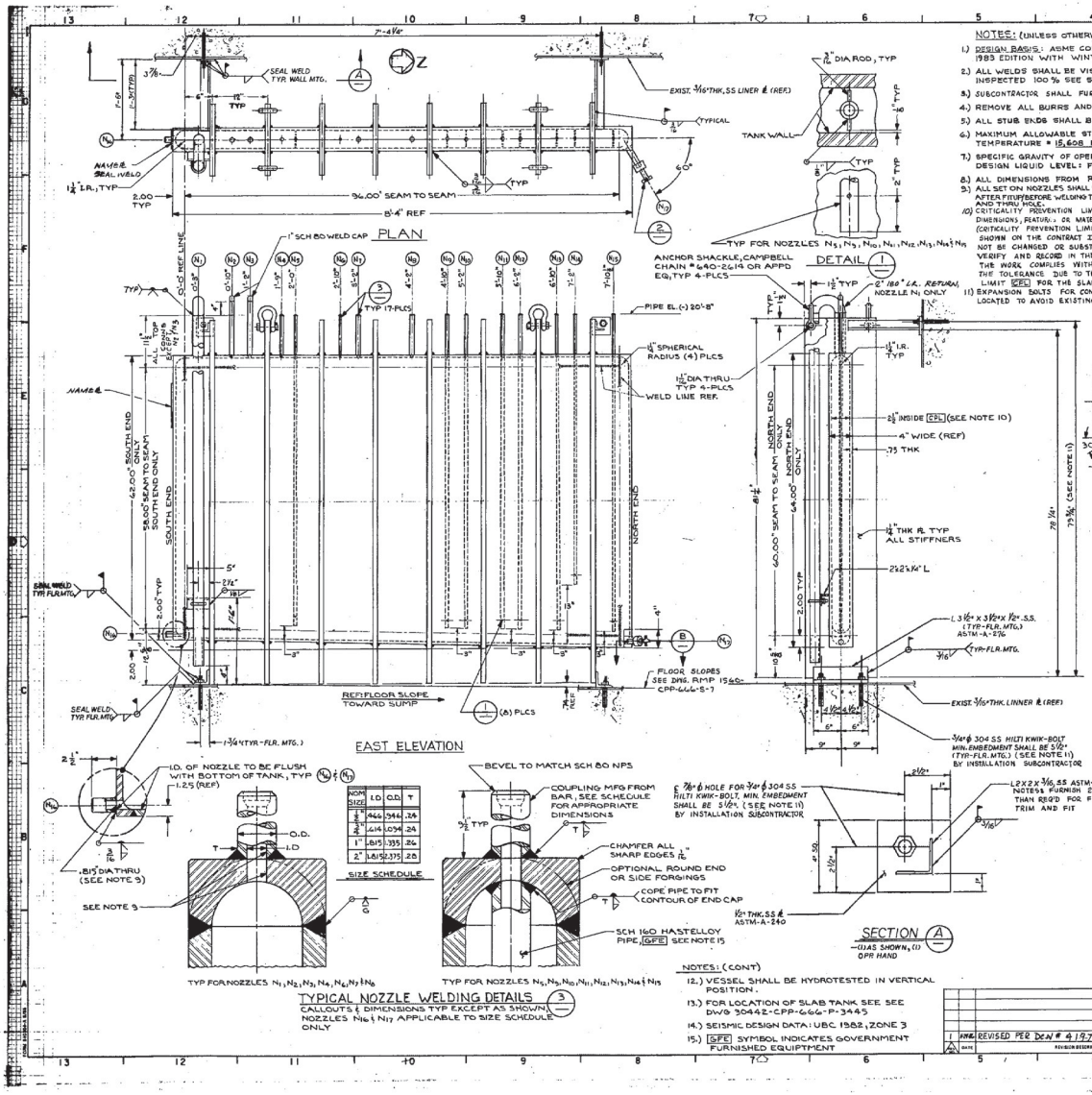

NOTES: (UNLESS OTHERWISE SPECIFIED)

1.) DESIGN BASIS: ASME CODE, SECTION VIII, DIVISION 1 1983 EDITION WITH WINTER 1984 ADDENDA. APPENDIX 18
2.) ALL WELDS SHALL BE VISUAL AND DYE PENETRANT INSPECTED 100 % SEE SPECIFICATION 30000-M-1
3.) SUBCONTRACTOR SHALL FURNISH ALL PARTS.
4.) REMOVE ALL BURRS AND SHARP EDGES
5.) ALL STUB ENDS SHALL BE BEVELED PER ANSI B16.25
6.) MAXIMUM ALLOWABLE STRESS @ DESIGN TEMPERATURE = 15,608 PSI.
7.) SPECIFIC GRAVITY OF OPERATING LIQUID: 1.17 DESIGN LIQUID LEVEL: FULL
8.) ALL DIMENSIONS FROM REFERENCE LINE
9.) ALL SET ON NOZZLES SHALL BE INSPECTED BY SUB-CONTRACTOR AFTER FITUP BEFORE WELDING TO ENSURE ALIGNMENT OF I.D. OF NOZZLE AND THRU HOLE.
10) CRITICALITY PREVENTION LIMIT CPL DIMENSIONS, FEATURES OR MATERIALS DESIGNATED BY THE CPL (CRITICALITY PREVENTION LIMIT) SYMBOL SHALL BE AS SHOWN ON THE CONTRACT DRAWINGS AND SHALL NOT BE CHANGED OR SUBSTITUTED. THE INSPECTOR SHALL VERIFY AND RECORD IN THE INSPECTION RECORDS THAT THE WORK COMPLIES WITH THE CONTRACT DRAWINGS. THE TOLERANCE DUE TO THE CRITICALITY PREVENTION LIMIT CPL FOR THE SLAB TANK IS ±.125
11) EXPANSION BOLTS FOR CONCRETE SHALL BE FIELD LOCATED TO AVOID EXISTING REINFORCING STEEL.

NOTES: (CONT)

12.) VESSEL SHALL BE HYDROTESTED IN VERTICAL POSITION.
13.) FOR LOCATION OF SLAB TANK SEE SEE DWG 30442-CPP-666-P-3445
14.) SEISMIC DESIGN DATA: UBC 1982, ZONE 3
15.) GFE SYMBOL INDICATES GOVERNMENT FURNISHED EQUIPMENT

DESIGN DATA

1. DESIGN BASIS #- SEE NOTE 1	
2. STAMPING REQUIREMENTS YES PER ASME CODE	
3. SPEC. 30000-M1, W3, 30442-W9-943	
4. DESIGN PRESSURE	100 PSIG TEMP. 104 °F
5. OPER. PRESSURE	PSIG TEMP. °F
6. POSTWELD HEAT TREATMENT #	NONE °F HOURS
7. WELD EXAMINATION RT-1, VISUAL & DYE PENETRANT SEE NOTE 2	
8. JOINT EFFICIENCY	SHELL 100 % HEADS 100 %
9. NOM. CORROSION ALLOWANCE	SHELL .125" HEADS .125" NOZZLE NECKS .125"
10. MAX. ALLOWABLE WORKING PRESSURE @ DESIGN TEMP.	PER ASME CODE PSIG
11. BASIS FOR CALCULATED TEST PRESSURE	PSIG
SIGNIFIELD TEST LIMITED BY	PER ASME CODE
12. HYDROSTATIC TEST PRESSURE SHOP	150 PSIG SEE NOTE 12
13. MATERIAL SPECIFICATIONS	
(a) SIDES	SA240 T-304L
(b) ENDS	SA182 GR-F304L
(c) STIFFENERS	SA240 -304L
(d) NOZZLE NECKS & PIPE	SA 403 -304L
(e) FITTINGS	SA403 - 304L
(f) COUPLING	
(g) GASKETS	
(h) BOLTS - EXTERNAL	
(i) BOLTS - INTERNAL	
(j) NUTS - EXTERNAL	
(k) NUTS - INTERNAL	
(l) SHOP PLATES & SHAPES	
(m) SEAL	
(n) EXTERNAL ATTACHMENTS	SA-304L
(o) INTERNAL PIPES ASTM B622 (HASTELLOY C 4) GFE	
14. SEE G.N.S. FURN. AUTOMATIC COVERS, RIVER & GASKET	
15. SHUNT REQ'D	
16. INSULATION (BY OTHERS)	NO. OF LAYERS / TOTAL THK.
17. PAINTING (BY OTHERS)	THK. / MAT'L. / SOLFT. / CLIFT.
18. INSULATED OR PROTECTED SHUNTS TO HAVE SLOTTED OPENINGS	
19. INSPECTION BY	CLIENT/FLUOR

MARK	NO. REQ'D	NOM SIZE	RATING	FACING	DESCRIPTION
N1	1	2"		BE	VENT
N2	1	1"			SPARE (CAPPED)
N3	1	1"			SPARE (CAPPED)
N4	1	3/4"			SAMPLE RETURN
N5	1	1½"			SPARGE W/INT. PIPE
N6	1	1½"			INSTRUMENT- L.R. LEVEL PROBE
N7	1	1"			INLET FROM JET 586
N8	1	1"			INLET FROM JET 584
N9	1	3/4"			SAMPLE OUTLET W/INT. PIPE
N10	1	1"			SUCTION TO JET 501 W/INT. PIPE
N11	1	1"			SUCTION TO JET 502 W/INT. PIPE
N12	1	1"			SUCTION TO JET 503 W/INT. PIPE
N13	1	1½"			INSTRUMENT PROBE I.R. COMMON
N14	1	1½"			INSTRUMENT PROBE DENSITY L.R.
N15	1	1½"			SPARGE W/INT. PIPE
N16	1	1"			DECON LINE
N17	1	1"			CLEANOUT PORT

CONNECTION SCHEDULE

NOZZLE PROJECTIONS ARE FROM C/L OF VESSEL TO EXTREME FACE OF FLANGE-EXCEPT AS NOTED.

I.D. SEE ELEVATION

FOR		& SMALLER	
FOR		TO	INCL.
FOR		& LARGER	

ESTIMATED VESSEL WEIGHTS

(a)	FURN. BY / INSTALLED BY	LB.
(b)	FABR. (~~FOB SHAPE~~)	5660 LB.
(c)	EMPTY (LESS OPER. LIQUID)	6810 LB.
(d)	OPERATING	7515 LB.
(e)	FULL OF WATER	7200 LB.

CAPACITY: 8.6 CU FT, 65 GAL

APPROVED FOR CONSTRUCTION

CRITICALITY SAFETY APPROVAL

TITLE II

QUALITY LEVEL 1

FOR DRAWING INDEX SEE DRAWING NO. 30442-W9-666-T-3020

FLUOR

CONTRACT NO. 84304

U.S. DEPARTMENT OF ENERGY
IDAHO OPERATIONS OFFICE
IDAHO FALLS, IDAHO
CONTRACT DE-AC07-84ID12801

CPP AREA BUILDING 666

SLAB TANK
VES-FC-184

MODIFY SUMP SYSTEM

DRAWING NO.	30442-CPP-666 -M-3655
REV.	1
SCALE	NONE
MICRO REDUCED NO.	85-32
AD SHEET NO.	

UNLESS OTHERWISE SPECIFIED DIMENSIONS ARE IN INCHES

TOLERANCES ON:

DECIMAL	ANGLE	FRACTION
.XX ± .03	± 1/2°	± 1/16
.XXX ± .010		

ALL MACH SURFACES 125

NO	DATE	REVISION DESCRIPTION
1	1986	REVISED PER DCN # 41197 & TASK 40483

DISTRIBUTION CODE:

D.K.

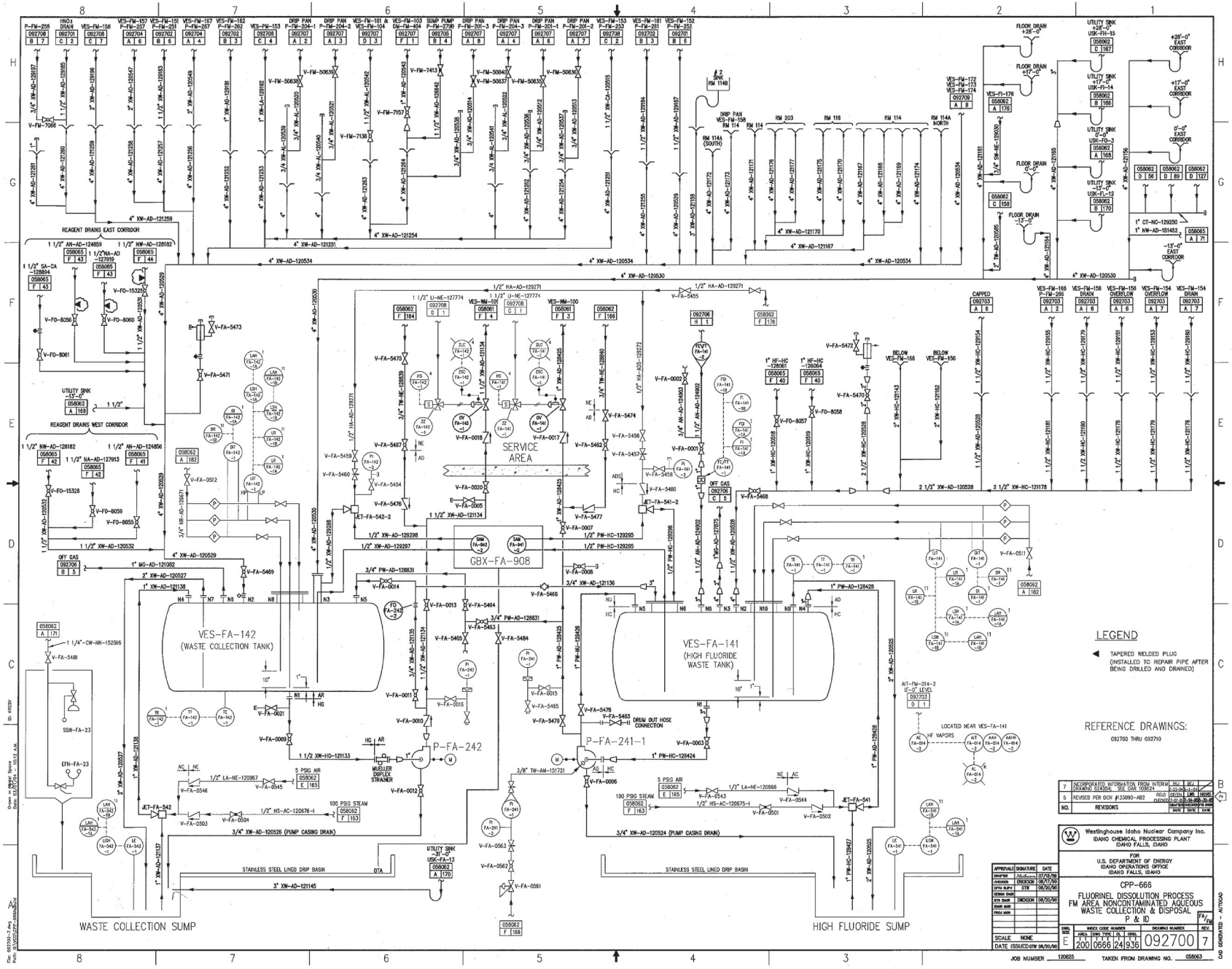
VES-FA-142
(WASTE COLLECTION TANK)
VES-FA-141
(HIGH FLUORIDE WASTE TANK)
GBX-FA-908
SERVICE AREA
P-FA-242
P-FA-241-1
WASTE COLLECTION SUMP
HIGH FLUORIDE SUMP
LEGEND
TAPERED WELDED PLUG (INSTALLED TO REPAIR PIPE AFTER BEING DRILLED AND DRAINED)
REFERENCE DRAWINGS:
092700 THRU 092710
Westinghouse Idaho Nuclear Company Inc.
IDAHO CHEMICAL PROCESSING PLANT
IDAHO FALLS, IDAHO
FOR
U.S. DEPARTMENT OF ENERGY
IDAHO OPERATIONS OFFICE
IDAHO FALLS, IDAHO
CPP-666
FLUORINEL DISSOLUTION PROCESS
FM AREA NONCONTAMINATED AQUEOUS
WASTE COLLECTION & DISPOSAL
P & ID
092700
7
JOB NUMBER 120825
TAKEN FROM DRAWING NO. 058063

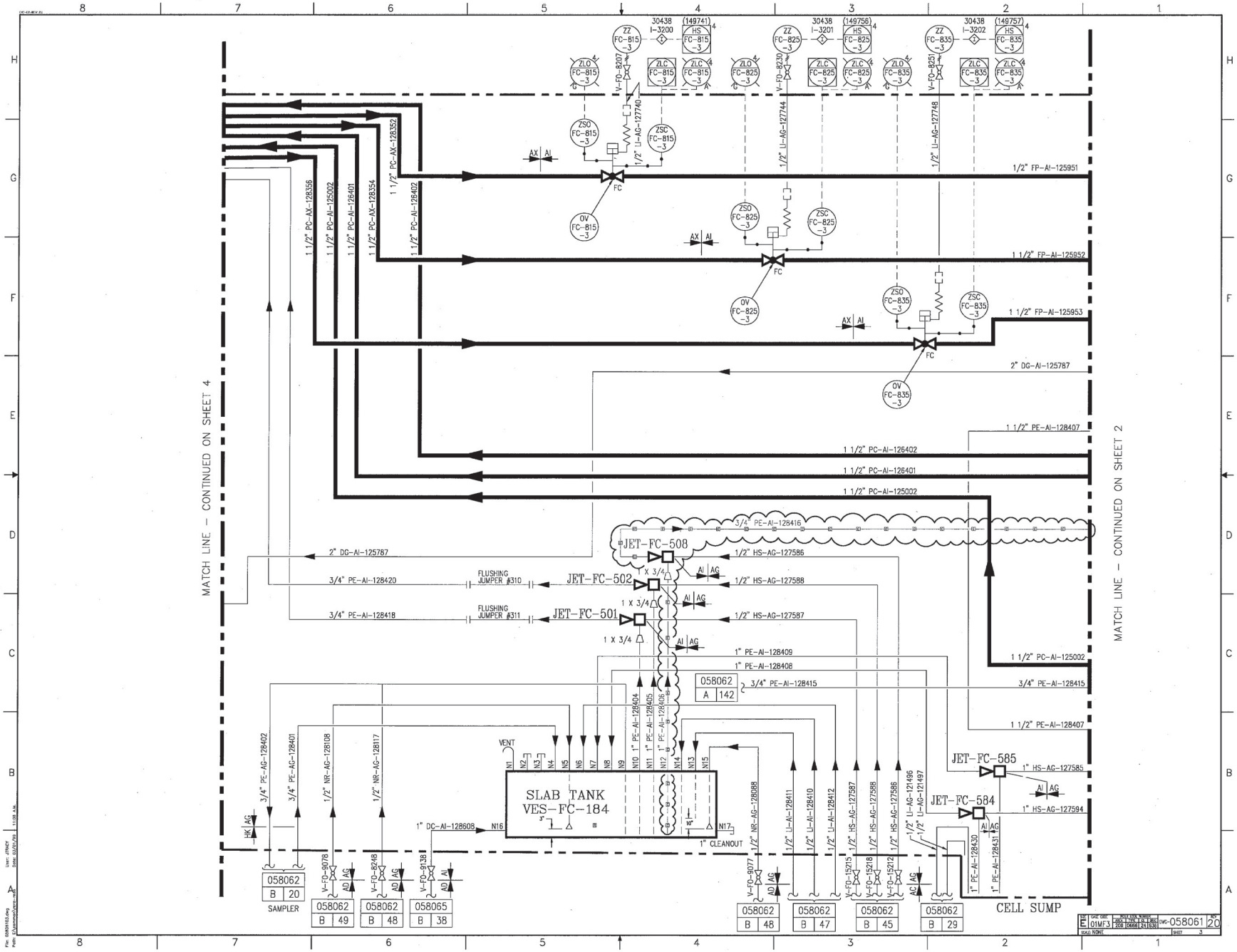
MATCH LINE – CONTINUED ON SHEET 4
MATCH LINE – CONTINUED ON SHEET 2
1/2" FP-AI-125951
1 1/2" FP-AI-125952
1 1/2" FP-AI-125953
2" DG-AI-125787
1 1/2" PE-AI-128407
1 1/2" PC-AI-126402
1 1/2" PC-AI-126401
1 1/2" PC-AI-125002
3/4" PE-AI-128416
JET-FC-508
JET-FC-502
JET-FC-501
JET-FC-585
JET-FC-584
FLUSHING JUMPER #310
FLUSHING JUMPER #311
3/4" PE-AI-128420
3/4" PE-AI-128418
1/2" HS-AG-127586
1/2" HS-AG-127588
1/2" HS-AG-127587
1" HS-AG-127585
1" HS-AG-127594
1" PE-AI-128409
1" PE-AI-128408
3/4" PE-AI-128415
1 1/2" PE-AI-128407
1 1/2" PC-AI-125002
SLAB TANK
VES-FC-184
VENT
1" DC-AI-128608
1" CLEANOUT
SAMPLER
CELL SUMP
058062 B 20
058062 B 49
058062 B 48
058065 B 38
058062 B 47
058062 B 45
058062 B 29
DWG-058061 20

NOTES:

1. BREAK ALL SHARP EDGES AND REMOVE ALL BURRS.
2. DIMENSIONS GIVEN ARE TO THEORETICAL SHARP CORNERS.
3. ALL PARTS SHALL BE THOROUGHLY CLEANED TO REMOVE ALL FOREIGN MATTER BEFORE FINAL ASSEMBLY.
4. FOR GENERAL ARRANGEMENT DRAWING SEE DRAWING NUMBER M-215.
5. ALL MATERIAL SHALL BE CARBON STEEL UNLESS OTHERWISE SPECIFIED.
6. ALL FITS SHALL CONFORM TO ANSI B4.1.

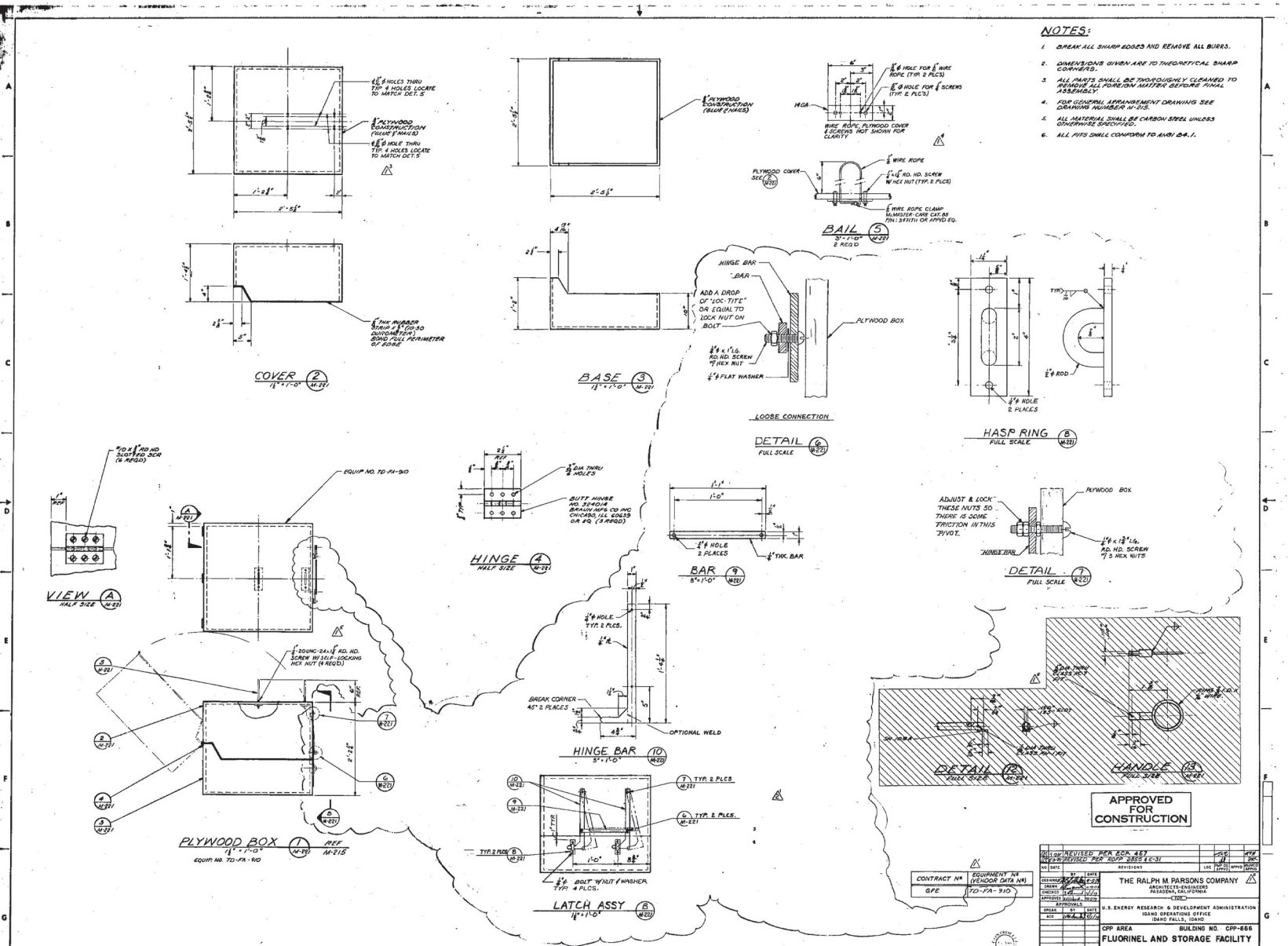

CONTRACT No.	EQUIPMENT No. (VENDOR DATA ONLY)
GFE	TD-FA-910

NO	DATE	REVISIONS	LOC	APP'D BY	APPVD	PLANTS APPVD
1	10/30/78	REVISED PER ECN 457				
2	3/9/79	REVISED PER RDFP 2865 & E-31				

THE RALPH M. PARSONS COMPANY
ARCHITECTS-ENGINEERS
PASADENA, CALIFORNIA

U.S. ENERGY RESEARCH & DEVELOPMENT ADMINISTRATION
IDAHO OPERATIONS OFFICE
IDAHO FALLS, IDAHO

CPP AREA — BUILDING NO. CPP-666

FLUORINEL AND STORAGE FACILITY

MECHANICAL

REMOTE HANDLING AIR FILTRATION CELL

PLYWOOD BOX

SCALE AS SHOWN

DATE ISSUED 4-5-79

DWG. NO. 1560-CPP-666-M-221 REV. NO. 2

PROJECT NO. 5586-7303

UNLESS OTHERWISE SPECIFIED DIMENSION ARE IN INCHES. MACHINE FINISHES ARE 125 RMS. TOLERANCES ARE:

INDEX CODE NUMBER: 2001 0664 1693 1 4 2524

PROENGINEER

3	2	1	SHEET
1	1	1	REV

REV STATUS OF SHEETS

REVISIONS

REV	DESCRIPTION		EFFECTIVE DATE:
1	REVISED PER DRF 316500	OM	4/9/2007 E.E.E.

NOTES:

1. REMOVE ALL BURRS AND SHARP EDGES.
2. ALL MACHINED FILLET RADII .03 MAXIMUM UNLESS OTHERWISE NOTED.
3. WELD PER INEEL WELD PROCEDURE SPECIFICATION S2.0 USING WELD FILLER METAL, ITEM 13.
4. (Q) VISUALLY INSPECT FINAL PASS OF ALL WELDS. ACCEPTANCE CRITERIA SHALL BE:

   NO CRACKS.

   COMPLETE FUSION SHALL EXIST BETWEEN WELD METAL AND BASE METAL.

   UNDERCUT SHALL NOT EXCEED .01" FOR MATERIAL LESS THAN 3/16". FOR MATERIAL 3/16" AND THICKER, UNDERCUT NOT TO EXCEED 1/32".

   FOR ALL WELDS THE SUM OF VISIBLE POROSITY 1/32" OR GREATER IN DIAMETER SHALL NOT EXCEED 3/8" IN ANY LINEAR INCH OF WELD AND SHALL NOT EXCEED 3/4" IN ANY 12" LENGTH OF WELD.

   ALL CRATERS SHALL BE FILLED TO THE FULL CROSS-SECTION OF THE WELD EXCEPT FOR ENDS OF FILLET WELDS OUTSIDE THEIR EFFECTIVE LENGTH.

   FILLET WELDS SHALL BE AT LEAST THE SIZE SPECIFIED IN THE WELD SYMBOL.
5. (Q) FINAL ASSEMBLY SHALL MEET CLEANLINESS REQUIREMENTS OF STD-7022, LEVEL D.
6. (Q) MECHANICALLY ETCH WITH INFORMATION SHOWN WITH 1 1/4" HIGH CHARACTERS SUBSTITUTING FOR "XX" THE SERIAL NUMBERS PROVIDED BY REQUESTER.
7. PROVIDE A CLEARANCE OF 1/8" MAXIMUM BETWEEN ITEM 8, BACK CLAMP, AND THE RECTANGULAR WASTE CONTAINER, WHEN THE CLAMP IS INSTALLED UNDER THE CONTAINER'S LIP.
8. (Q) VERIFY MARKING OF EQUIPMENT NUMBER HAS BEEN APPLIED ACCURATELY.
9. SEE EDF-5675 FOR CAPACITY CALCULATIONS AND PROOF TEST RESULTS
10. MECHANICALLY ETCH WITH INFORMATION SHOWN WITH 1 1/4" HIGH CHARACTERS.

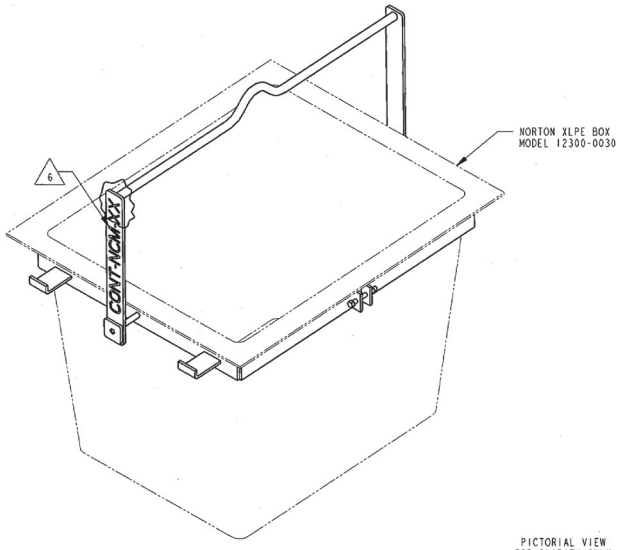

PICTORIAL VIEW
FOR CLARITY ONLY

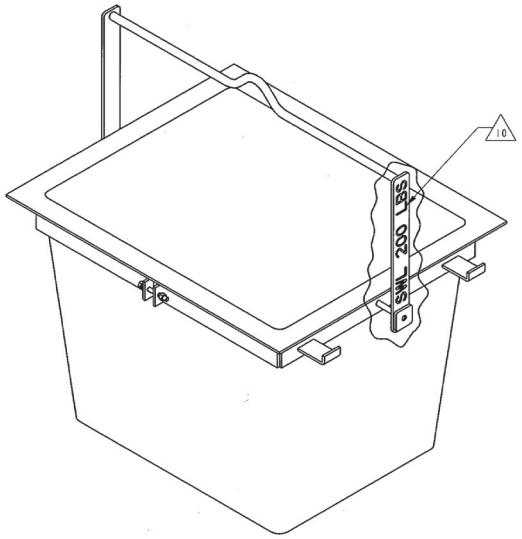

QTY REQD	SAFETY CAT.	PART OR IDENTIFYING NO.	NOMENCLATURE OR DESCRIPTION	MATERIAL/SPECIFICATION OR VENDOR NAME	ITEM NO.
	AR	CG		WELD FILLER METAL	ER308 OR 308L AWS A5.9	13
						12
	1	CG		NUT, HEX 3/8-16 UNC-2B	SST	11
	1	CG		BOLT, HEX HEAD 3/8-16 UNC-2A X 3 LG	SST	10
	2	CG	-9	FRONT CLAMP	BAR, 1/4 X 2 304 OR 304L SST ASTM A276	9
	1	CG	-8	BACK CLAMP	BAR, 1/4 X 2 304 OR 304L SST ASTM A276	8
	2	CG	-7	BAIL HANDLE	BAR, 1/4 X 2 304 OR 304L SST ASTM A276	7
	4	CG	-6	BAIL STOP	BAR, 1/4 X 2 304 OR 304L SST ASTM A276	6
	2	CG	-5	BAIL KEEPER	BAR, 1/4 X 2 304 OR 304L SST ASTM A276	5
	2	CG	-4	BAIL PIN	BAR, Ø1/2 304 OR 304L SST ASTM A276	4
	1	CG	-3	BAIL	BAR, Ø3/4 304 OR 304L SST ASTM A276	3
						2
		CG	-1	BAIL ASSEMBLY		1

PARTS LIST

INSPECTION REQUIREMENTS		
QC REQUIRED	-1	FINAL
~~QC NOT REQUIRED~~	DASH NO.	NEXT ASSY
(A) DENOTES Q/C INSP. REQD.	APPLICATION	

DIMENSIONING AND SYMBOLOGY ARE AMERICAN NATIONAL STANDARD UNLESS OTHERWISE SPECIFIED
SURFACE ROUGHNESS 125
DIMENSIONS AND TOLERANCES ARE IN INCHES
TOLERANCES: .X = ± .1
DECIMALS: .XX = ± .03
.XXX = ± .010
FRACTIONS ± 1/8
ANGULAR ± 2°
DO NOT SCALE DRAWING

SUBCONTRACT NO.
REQUESTER: J. LAW
DESIGN: W. SHURTLIFF
DRAWN: V.K. JACKSON
PROJECT NO.
SPCL CODE
FOR REVIEW/APPROVAL SIGNATURES SEE DAR NO. 120924
EFFECTIVE DATE: 03/08/05 D.E.J.

INEEL (Idaho National Engineering & Environmental Laboratory) BECHTEL BWXT IDAHO, LLC

CPP-659
REMOTE WASTE BOX
BAIL ASSEMBLY
CONT-NCM-16

SIZE	CAGE CODE	INDEX CODE NUMBER				DWG-	REV
		AREA	TYPE	CL	ORIG		
D	01MF3	200	0659	41	090	630299	1

SCALE: NONE NCM SHEET 1 OF 3

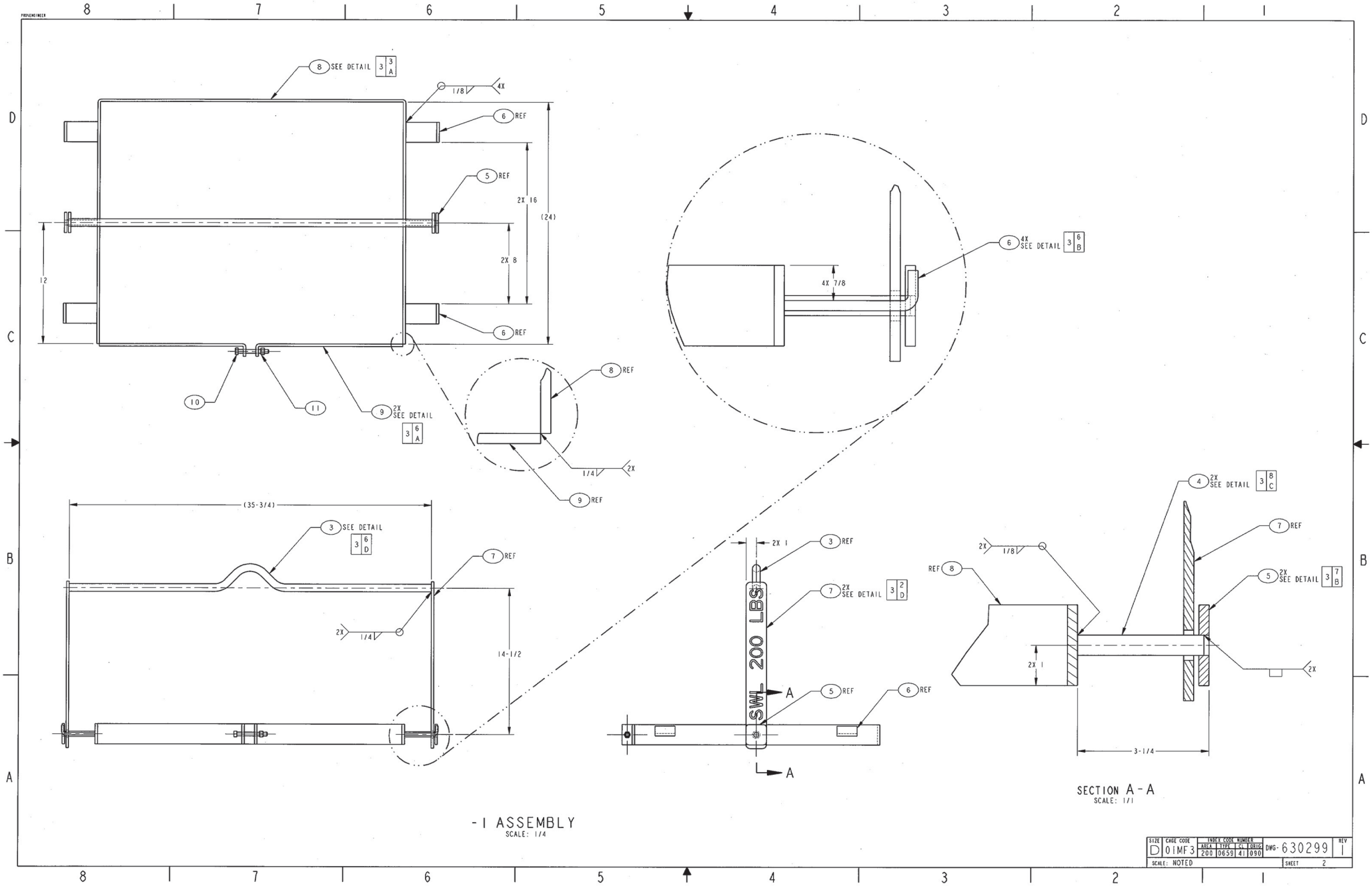
8 SEE DETAIL 3 3 A
1/8 4X
6 REF
5 REF
2X 16
(24)
2X 8
12
6 REF
10
11
9 2X SEE DETAIL 3 6 A
8 REF
1/4 2X
9 REF
6 4X SEE DETAIL 3 6 B
4X 7/8
(35-3/4)
3 SEE DETAIL 3 6 D
7 REF
2X 1/4
14-1/2
2X 1
3 REF
7 2X SEE DETAIL 3 2 D
SWL 200 LBS
A
5 REF
6 REF
A
4 2X SEE DETAIL 3 8 C
7 REF
2X 1/8
REF 8
5 2X SEE DETAIL 3 7 B
2X 1
2X
3-1/4
-1 ASSEMBLY
SCALE: 1/4
SECTION A-A
SCALE: 1/1
SIZE D
CAGE CODE 01MF3
INDEX CODE NUMBER AREA 200 TYPE 0659 CL 41 DRIG 090
DWG- 630299
REV 1
SCALE: NOTED
SHEET 2

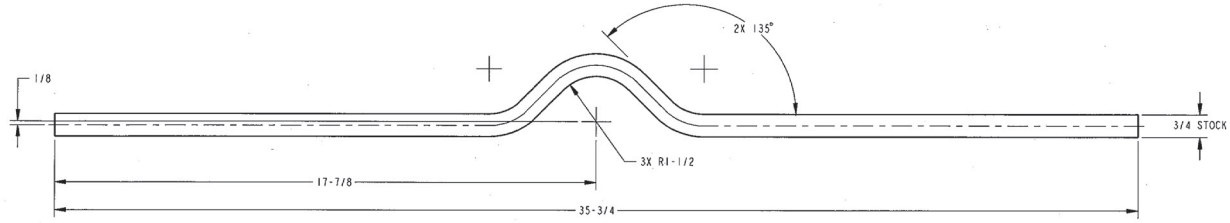

3 DETAIL
SCALE: 1/2

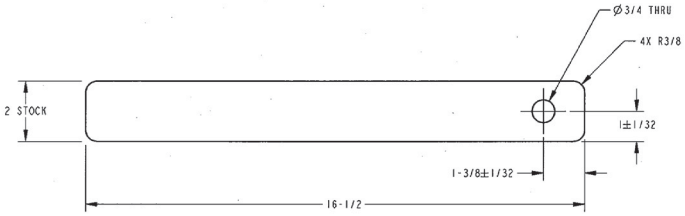

7 DETAIL
SCALE: 1/2

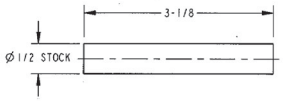

4 DETAIL
SCALE: 1/1

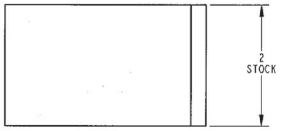

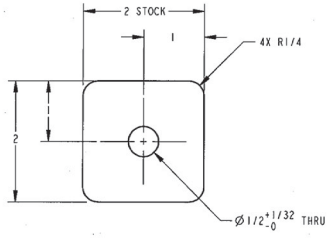

5 DETAIL
SCALE: 1/1

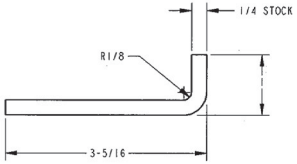

6 DETAIL
SCALE: 1/1

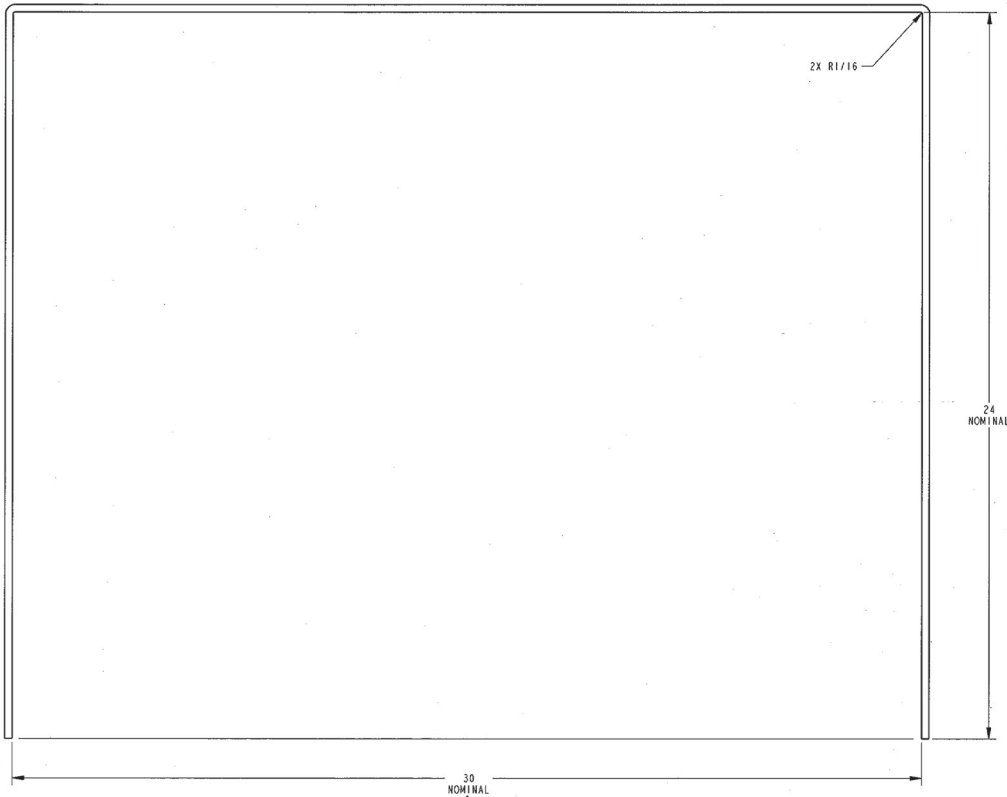

8 DETAIL
SCALE: 1/2

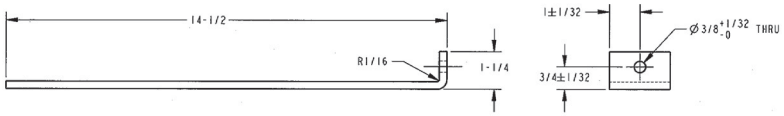

9 DETAIL
SCALE: 1/2

SIZE	CAGE CODE	INDEX CODE NUMBER				DWG-	REV
		AREA	TYPE	SL	ORIG		
D	01MF3	200	0659	41	090	630299	1

SCALE: NOTED SHEET 3

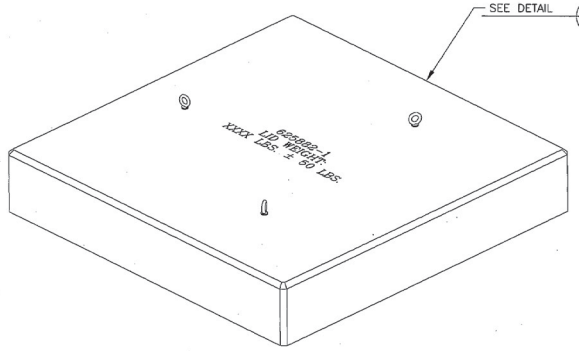

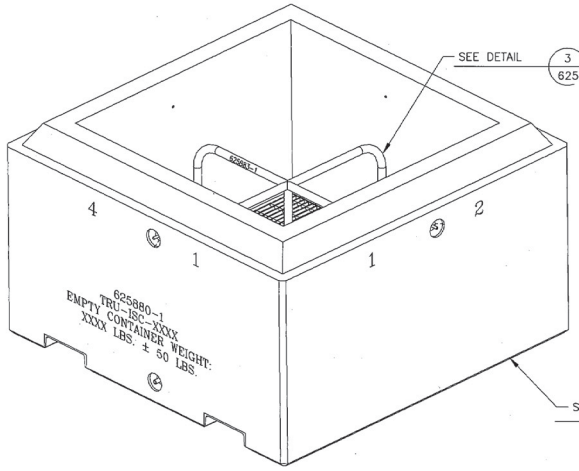

ISOMETRIC VIEW

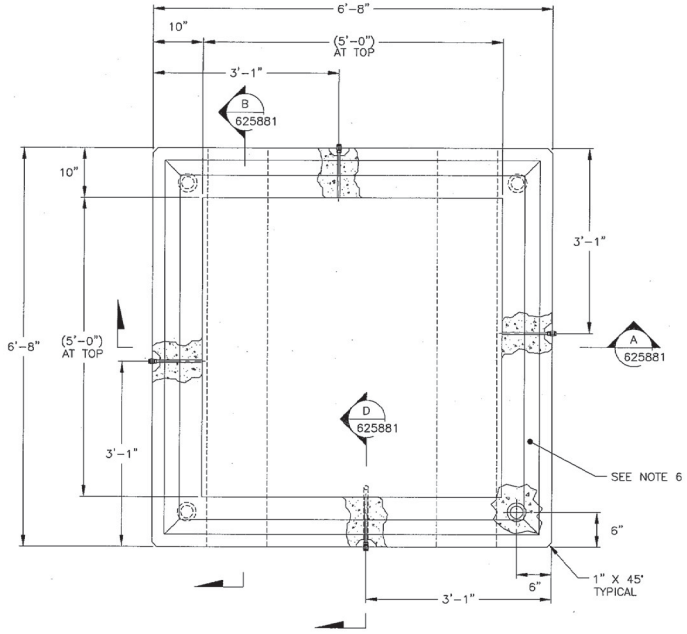

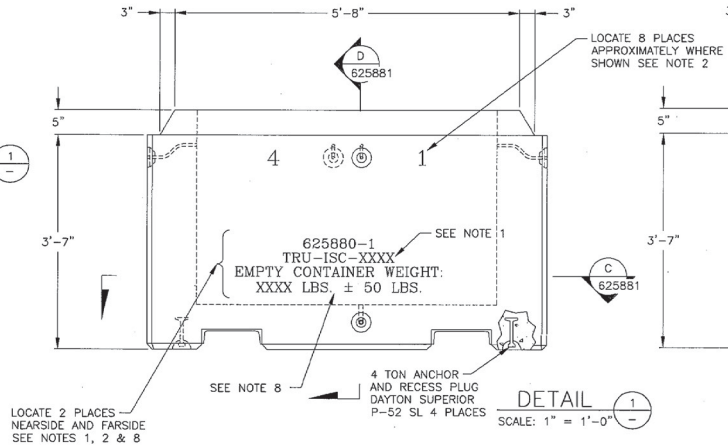

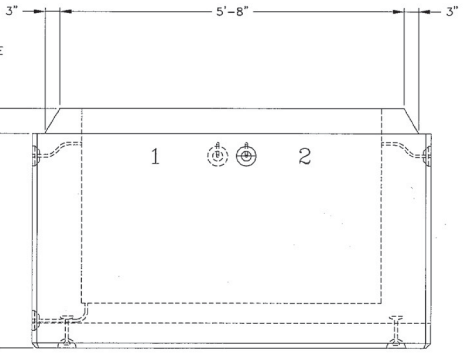

DETAIL 1 / –
SCALE: 1" = 1'-0"

REVISIONS

REV	DESCRIPTION	EFFECTIVE DATE:
1	SEE DAR 110317	4/9/2004
2	AS-BUILT AS OF 7-27-2004 SEE DAR 113928	8/30/2004
3	AS-BUILT AS OF 10/13/05 SEE DAR-125855	11/7/05

NOTES:

1. SEQUENTIALLY NUMBER EACH CONTAINER IN ORDER OF FABRICATION WITH TRU-ISC-0001 THRU TRU-ISC-0160.
2. PAINT, LETTERING AND NUMBERING IN 2" HIGH CHARACTERS USING BLACK ENAMEL PAINT AS SPECIFIED IN SPC-511.
3. CONCRETE SHALL HAVE A MINIMUM 28-DAY COMPRESSIVE STRENGTH OF 4,000 PSI. USE OF AN INTEGRAL REPELLENT ADMIXTURE (SUCH AS GRACE CONSTRUCTION PRODUCTS' DARAPEL).
4. REINFORCING STEEL SHALL CONFORM TO ASTM A615 GRADE 60.
5. PAINT ALL EXPOSED METAL SURFACES PER SPC-511.
6. APPLY WATER PROOFING ON ALL CONCRETE SURFACES PER SPC-511.
7. MATERIAL SPECIFICATIONS, TESTING AND DIMENSIONAL TOLERANCES FOR FINAL ASSEMBLY TO BE PER SPC-511.
8. WEIGH EMPTY CONTAINER AND LID AND PAINT EMPTY WEIGHT ON CONTAINER ± 50 LBS.
9. LIFT FROM EYEBOLTS SHALL BE WITHIN 5 DEGREES OF VERTICAL PER ASME B30.26-2004.

FOR DRAWING INDEX SEE DRAWING NO.	SUBCONTRACT NO.	INEEL Idaho National Engineering & Environmental Laboratory BECHTEL BWXT IDAHO, LLC
SCALE: 1" = 1'-0"	REQUESTER: DOUG PARKER DESIGN: STEVE MOODY DRAWN: O. MORGAN PROJECT NO. 23048 SPEC CODE	RWMC REMOTE HANDLING FOR TRU WASTE INTERIM STORAGE SYSTEM INTERIM STORAGE CONTAINER ASSEMBLY AND DETAILS
DESIGN PHASE:	FOR REVIEW/APPROVAL SIGNATURES SEE DAR NO. 109473	SIZE D · CAGE CODE 01MF3 · INDEX CODE NUMBER AREA 098 TYPE 9999 CL 47 ORG 090 · DWG-625880 · REV 3
SAFETY CATEGORY: CG	EFFECTIVE DATE: 2/19/2004	SCALE: NOTED · SHEET 1 OF 1

RMT-01-REV 3.3

Date: 10/24/05 - 7:02 AM | Layout Name: Sheet 1 | ID: PERKGW

File: 625880-3.dwg
Path: P:\DAR-125855

FMT-D1-REV 3.3

REVISIONS		
REV	DESCRIPTION	EFFECTIVE DATE
1	SEE DAR 110317	4/9/2004
2	AS-BUILT AS OF 7-27-2004 SEE DAR 113928	8/30/2004

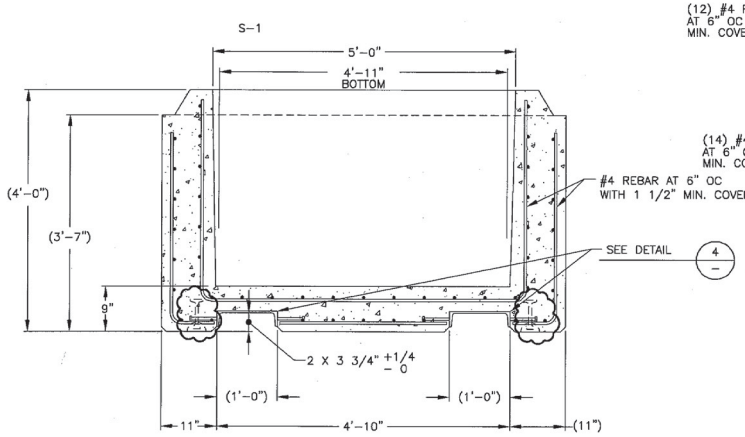

SECTION A 625880
1" = 1'-0"

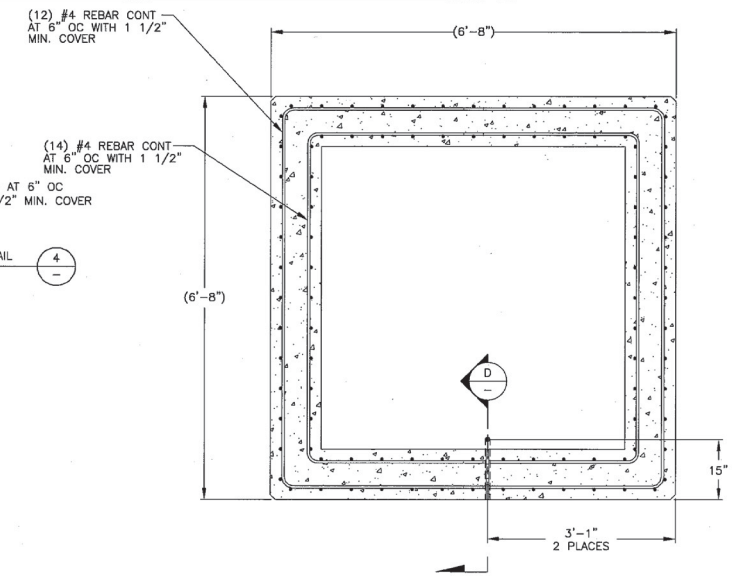

SECTION C 625880
1" = 1'-0"

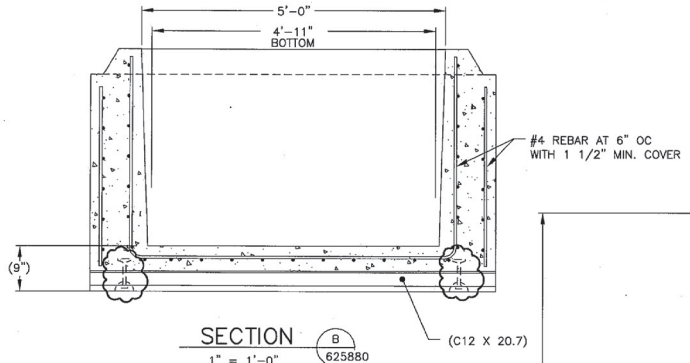

SECTION B 625880
1" = 1'-0"

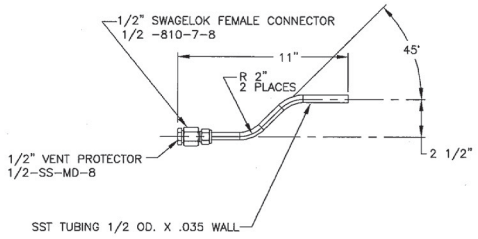

DETAIL 6
3"=1'-0"

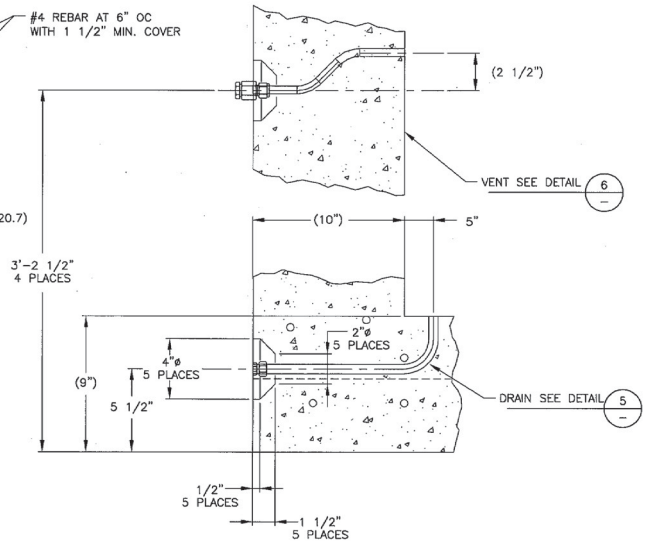

SECTION D
3"=1'-0"

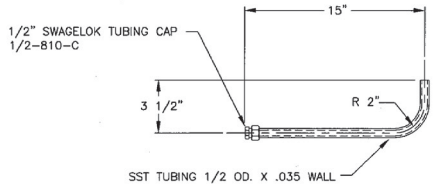

DETAIL 5
3"=1'-0"

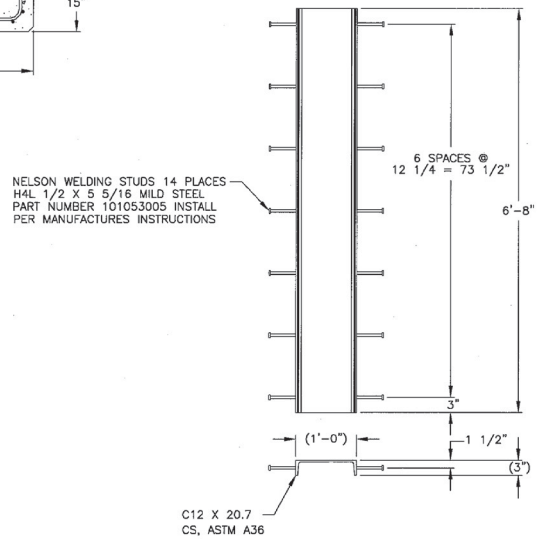

DETAIL 4
1"=1'-0"

NOTE: USE THIS DRAWING IN CONJUNCTION WITH DRAWING 625880

FOR DRAWING INDEX SEE DRAWING NO.	SUBCONTRACT NO.	INEEL (Idaho National Engineering & Environmental Laboratory) BECHTEL BWXT IDAHO, LLC
SCALE: 3" = 1'-0" / SCALE: 3/4" = 1'-0"	REQUESTER: DOUG PARKER	RWMC REMOTE HANDLING FOR TRU WASTE INTERIM STORAGE SYSTEM INTERIM STORAGE CONTAINER SECTIONS AND DETAILS
	DESIGN: STEVE WOODY	
	DRAWN: D. MORGAN	
	PROJECT NO. 23048	
	SPEC CODE	
DESIGN PHASE:	FOR REVIEW/APPROVAL SIGNATURES SEE DAR NO. 109473	SIZE D; CAGE CODE 01MF3; INDEX CODE NUMBER AREA 098 TYPE 9999 CL 47 ORIG 090; DWG-625881; REV 2
SAFETY CATEGORY: CG	EFFECTIVE DATE: 2/19/2004	SCALE: NOTED; SHEET 1 OF 1

File: 625881-2.DWG
Date: 08/30/04 - 08:36 A.M. | Layout Name: Sheet 2
ID: OMORGAN
Author: M.WOODY

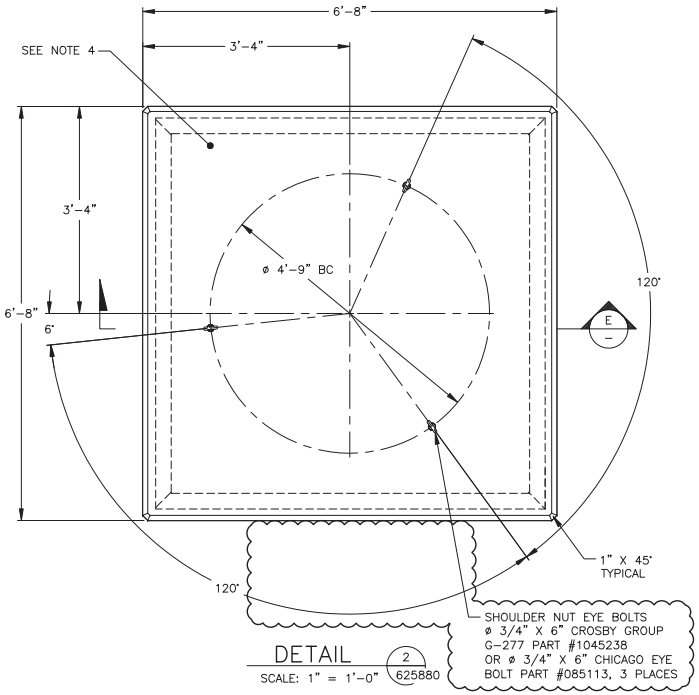

DETAIL (2) 625880
SCALE: 1" = 1'-0"

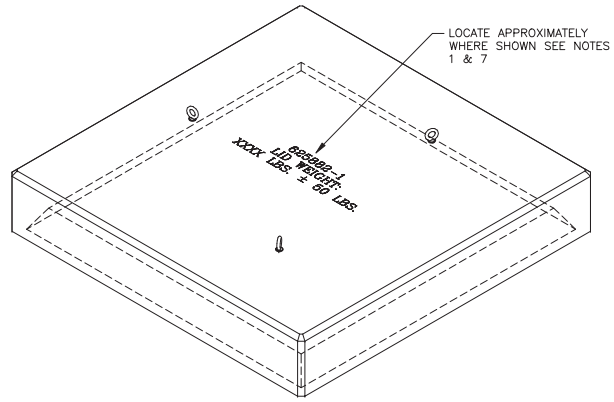

ISOMETRIC VIEW

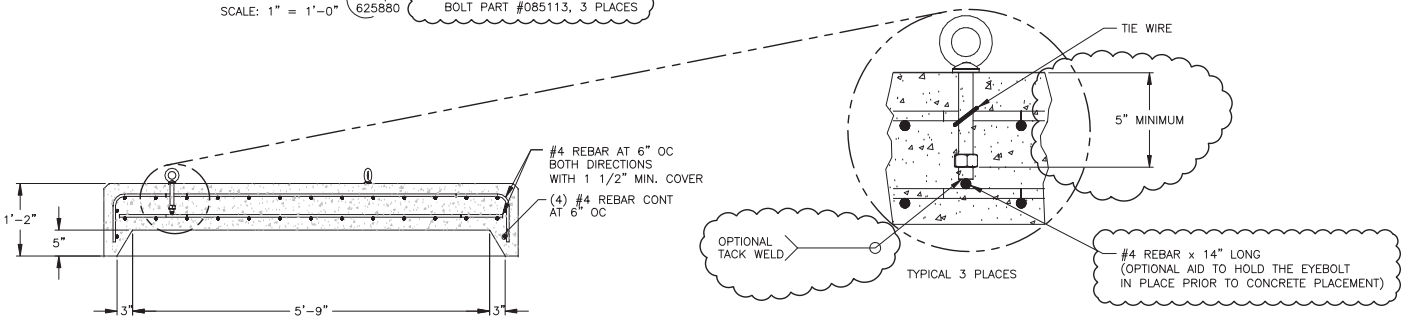

SECTION (E)
1 1/2" = 1'-0"

REVISIONS		
REV	DESCRIPTION	EFFECTIVE DATE:
1	AS-BUILT AS OF 7-27-2004 SEE DAR 113928	8/30/2004
2	AS-BUILT AS OF 10/12/05 SEE DAR-125856	11/7/05
3	AS-BUILT AS OF 7/23/09 SEE DRF 327186	8/12/09

NOTES:

1. PAINT, LETTERING AND NUMBERING IN 2" HIGH CHARACTERS USING BLACK ENAMEL PAINT AS SPECIFIED IN SPC-511.
2. CONCRETE SHALL HAVE A MINIMUM 28-DAY COMPRESSIVE STRENGTH OF 4,000 PSI. USE OF AN INTEGRAL WATER REPELLENT ADMIXTURE (SUCH AS GRACE CONSTRUCTION PRODUCTS' DARAPEL).
3. REINFORCING STEEL SHALL CONFORM TO ASTM A615 GRADE 60.
4. WATER PROOFING ON ALL EXPOSED SURFACES PER SPC-511.
5. SEE SPC-511 FOR DIMENSIONAL TOLERANCES.
6. MATERIAL SPECIFICATIONS AND TESTING FOR FINAL ASSEMBLY TO BE PER SPC-511.
7. WEIGH LID AND PAINT WEIGHT ON LID ± 50 LBS.

FOR DRAWING INDEX SEE DRAWING NO.

SCALE: 1" = 1'-0"

DESIGN PHASE:

SAFETY CATEGORY: CG

SUBCONTRACT NO.

REQUESTER: DOUG PARKER
DESIGN: STEVE MOODY
DRAWN: O. MORGAN
PROJECT NO. 23048
SPEC CODE
FOR REVIEW/APPROVAL SIGNATURES SEE DAR NO. 109473
EFFECTIVE DATE: 2/19/2004

INEEL Idaho National Engineering and Environmental Laboratory
BECHTEL BWXT IDAHO, LLC

RWMC REMOTE HANDLING FOR TRU WASTE
INTERIM STORAGE SYSTEM
INTERIM STORAGE CONTAINER LID
ASSEMBLY AND DETAILS

SIZE	CAGE CODE	INDEX CODE NUMBER				DWG-625882	REV
		AREA	TYPE	CL	ORIG		
D	01MF3	098	9999	47	090		3

SCALE: NOTED

SHEET 1 OF 1

FMT-D1-REV 3.3

File: 625882-3.dwg
Path: K:\INTEC Misc Drafting\Contract Dwgs DWGS\d8-DRF-327186
Date: 08/12/09 - 9:23 AM | Layout Name: Sheet 3 | ID: STAKKT

REVISIONS		
REV	DESCRIPTION	EFFECTIVE DATE
1	AS-BUILT AS OF 2-27-2004 SEE DAR 113928	8/30/2004

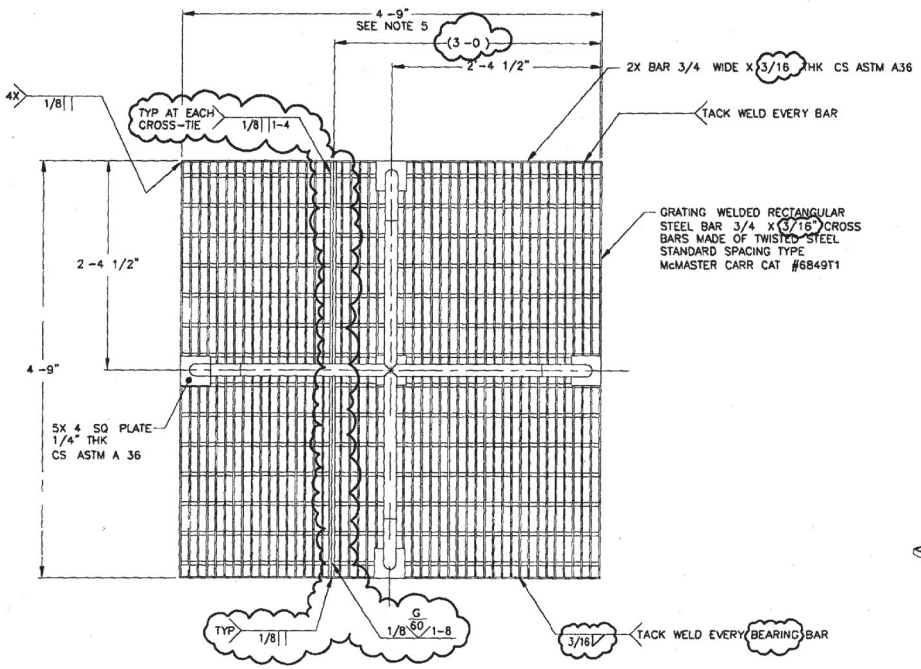

NOTES

1 PAINT LETTERING AND NUMBERING IN 1 HIGH CHARACTERS USING BLACK ENAMEL PAINT AS SPECIFIED IN SPC-511

2 PAINT ALL EXPOSED METAL SURFACES PER SPC-511 USING IMRON EPOXY MASTIC PRIMER AND URETHANE PAINT OR EQUAL

3 SEE SPC-511 FOR DIMENSIONAL TOLERANCES

4 MATERIAL SPECIFICATIONS AND TESTING FOR FINAL ASSEMBLY TO BE 3/4" X 3/16 GRATING

5 CONSTRUCT GRATING SUCH THAT A FULL BEARING BAR OCCURS ON OUTSIDE EDGES DIMENSION CAN VARY ± 1 3/16"

6 WELD 4 SQUARE PLATE TO TOP SURFACE OF GRATING AT EVERY BEARING BAR OR AT EVERY CROSS BAR WHERE POSSIBLE

7 WELD PER SPC-511 SECTION 4 4 7 AND INSPECT PER SPC-511 SECTION 6 2 4

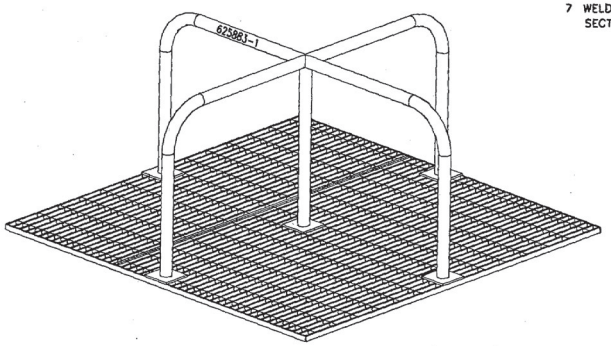

ISOMETRIC VIEW

SHOWN FOR CLARITY ONLY

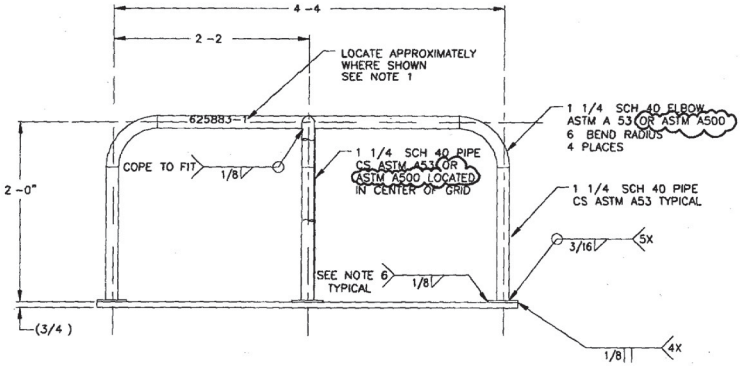

DETAIL 3 / 625880

SCALE 1 = 1 -0

FOR DRAWING INDEX SEE DRAWING NO	SUBCONTRACT NO	INEEL Idaho National Engineering & Environmental Laboratory BECHTEL BWXT IDAHO, LLC
SCALE 1 1 0	REQUESTER DOUG PARKER	RWMC REMOTE HANDLING FOR TRU WASTE INTERIM STORAGE SYSTEM INTERIM STORAGE CONTAINER INSERT ASSEMBLY AND DETAILS
	DESIGN STEVE MOODY	
	DRAWN D MORGAN	
	PROJECT NO 23048	
	SPEC CODE	
DESIGN PHASE	OR REVIEW/APPROVAL SIGNATURES SEE DAR NO 109473	SIZE D / CAGE CODE 01MF3 / INDEX CODE NUMBER AREA 098 TYPE 9999 SEQ 47 REV 090 / DWG 625883 / REV 1
SAFETY CATEGORY CG	EFFECTIVE DATE 2/19/2004	SCALE NOTED / SHEET 1 OF 1

M 0 REV 3.3
F: 625883 1.DWG
Path: C:\2272 Moody
Date 07/28/04 09 43 AM Layout Dome Sheet 4
B 0 CR

FMT-D1-REV 3.2

NOTES:

1. TORQUE IN ACCORDANCE WITH BOLT TORQUE SEQUENCE TO REQUIRED VALUE. INTERIM TORQUE VALUE FOR TOP FLANGE BOLTS TO ALLOW LIFTING OR TRANSPORT OF ASSEMBLED EMPTY OVERPACKS SHALL BE 150 ±25 FT LBS. TORQUE VALUE FOR TOP AND BOTTOM FLANGE BOLTS AT FINAL ASSY SHALL BE 350 +25 −0 FT LBS.

2. ALL RH-TRU STORAGE AND CHARACTERIZATION OVERPACKS SHALL HAVE EQUIPMENT NUMBERS OF THE FORMAT "RH513174-ASSEMBLY NUMBER -SERIAL NUMBER FOR EACH UNIT, PAINTED ON THE TOP AND BOTTOM FLANGES AND TWO PLACES ON THE SHELL USING 3/4 INCH HIGH CHARACTERS WITH BLACK ENAMEL PAINT.

3. TORQUE ITEM 18 OR REPLACEMENT FILTER ONE-HALF TURN BEYOND HAND TIGHT.

4. THE −1 ASSY IS UNIQUE BECAUSE IT HAS 1 1/8-7 UNC-2A BOLTS IN THE TOP AND BOTTOM FLANGES. THE −2 ASSY AND SUBSEQUENT ASSEMBLIES HAVE 1 1/8-8 UN-2A BOLTS IN THE TOP AND BOTTOM FLANGES.

5. NUMBERS TO INDICATE THE BOLT TORQUING SEQUENCE SHALL BE PAINTED USING 3/4 INCH CHARACTERS ON THE OUTSIDE FACE OF THE TOP AND BOTTOM FLANGES.

6. MARK "EMPTY WEIGHT XXXX LBS" ON TWO SIDES OF THE OVERPACK, WITH 3/4 INCH HIGH CHARACTERS USING BLACK ENAMEL PAINT, WHERE XXXX REPRESENTS THE ACTUAL OVERPACK WEIGHT. SCALE ACCURACY TO BE ± 2 LBS.

7. MARKING SHALL BE 1/4" HIGH AND PRODUCED INDIVIDUALLY OR IN GROUPS BY IMPACT FORCE APPLIED BY HAMMER OR OTHER DEVICE TO DRIVE STAMP INTO THE MATERIAL. "X" INDICATES OVERPACK ASSEMBLY NUMBER.

8. OVERPACKS ASSEMBLED AFTER 6-1-2005 SHALL HAVE AT LEAST ONE ITEM 19, OVERPACKS ASSEMBLED PRIOR TO THAT DATE THAT REQUIRE SAMPLING SHALL HAVE ONE EXISTING ITEM 18 REPLACED WITH ITEM 19.

REVISIONS

REV	DESCRIPTION	EFFECTIVE DATE:
1	SEE DAR 98769	02/11/03
2	SEE DAR-98991	13 March 2003
3	SEE DAR-109500	02/25/04
4	CHANGED INDEX CODE AREA AND CLASS, SEE DAR-123570	7-11-2005

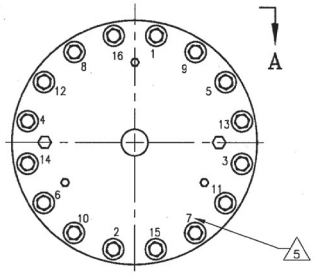

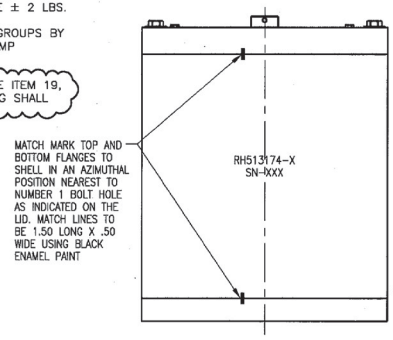

VIEW A−A

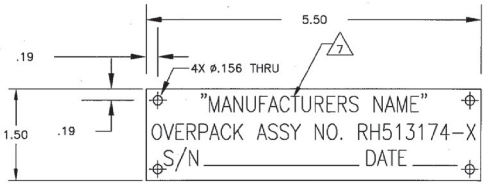

14 DETAIL
SCALE: 1/1

SERIES NUMBER	SERIAL NUMBER	FINAL ASSY NUMBER
1	SN-001 THRU SN-003	RH513174-1
2	SN-004 THRU SN-015	RH513174-2
3	SN-016 THRU SN-078	RH513174-3

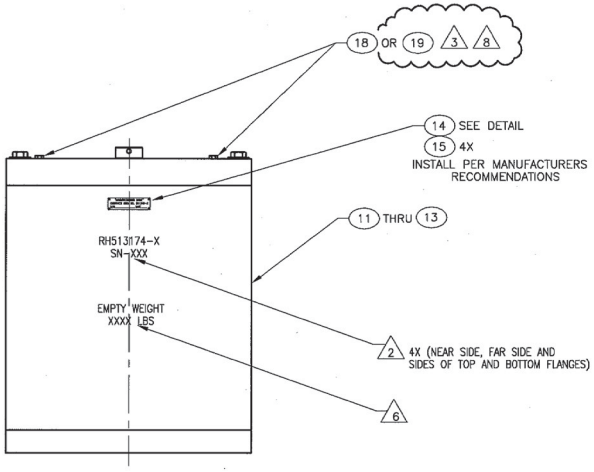

−1 THRU −10 ASSEMBLIES

−10	−9	−8	−7	−6	−5	−4	−3	−2	−1	SAFETY CAT.	PART OR IDENTIFYING NO.	NOMENCLATURE OR DESCRIPTION	MATERIAL/SPECIFICATION OR VENDOR NAME	ITEM NO.
							AR	AR	AR	CG	019DS	VENT FILTER	NUCLEAR FILTER TECH INC OR EQUIV (PASSPORT ID 108675, QL 3)	19
							AR	AR	AR	CG	013	VENT FILTER	NUCLEAR FILTER TECH INC OR EQUIV (PASSPORT ID 500008, QL 3)	18
														17
														16
							4	4	4	CG		DOMED HEAD DRIVE SCREW ø .16 X 0.5 LONG	SST	15
							1	1	1	CG	−14	ID PLATE	SHEET, 22 GA (.0293 THK) 304 SST ASTM A240	14
							1				511342-1	30 GAL. OVERPACK ASSY		13
								1			455184-2	30 GAL. OVERPACK TYPE 2 ASSY		12
									1		455184-1	30 GAL. OVERPACK TYPE 1 ASSY		11
											−10	FUTURE ASSEMBLY		10
											−9	FUTURE ASSEMBLY		9
											−8	FUTURE ASSEMBLY		8
											−7	FUTURE ASSEMBLY		7
											−6	FUTURE ASSEMBLY		6
											−5	FUTURE ASSEMBLY		5
											−4	FUTURE ASSEMBLY		4
										CG	−3	SERIES 3 ASSEMBLY		3
										CG	−2	SERIES 2 ASSEMBLY		2
										CG	−1	SERIES 1 ASSEMBLY		1

4

QTY REQD

PARTS LIST

DASH NO.	NEXT	FINAL	NEXT ASSY
−3		1	FINAL
−2		1	FINAL
−1		1	FINAL

APPLICATION

DIMENSIONING AND SYMBOLOGY ARE AMERICAN NATIONAL STANDARD UNLESS OTHERWISE SPECIFIED
SURFACE ROUGHNESS 125√
DIMENSIONS AND TOLERANCES ARE IN INCHES
TOLERANCES: .X = ± .1
DECIMALS: .XX = ± .03
.XXX = ± .010
FRACTIONS ± 1/8
ANGULAR ± 2°
DO NOT SCALE DRAWING

SUBCONTRACT NO.
REQUESTER: CRAIG TYLER
DESIGN: P PINSON
DRAWN: J JACKSON
PROJECT NO. 15638
SPEC CODE
FOR REVIEW/APPROVAL SIGNATURES SEE DAR NO. 43992
EFFECTIVE DATE: 3/20/2000

INEEL (Idaho National Engineering & Environmental Laboratory) BECHTEL BWXT IDAHO, LLC

STORAGE AND CHARACTERIZATION OVERPACK FOR RH-TRU WASTE FINAL ASSEMBLY

SIZE	CAGE CODE	INDEX CODE NUMBER				DWG-	REV
		AREA	TYPE	CL	LOBC		
D		098	9999	47	090	513174	4

SCALE: NONE
SHEET 1 OF 1

File: 513174-4.dwg
Path: C:\My Documents\BXS\Coil Design
Date: 07/11/05 - 11:41 AM | Layout Name: Sheet 1
ID: BXS

3	2	1	SHEET	REV STATUS OF SHEETS
4	4	4	REV	

REVISIONS

REV	DESCRIPTION	EFFECTIVE DATE:
1	SEE DAR 98769	02/11/03
2	SEE DAR-98991	13 March 2003
3	REVISED TITLE BLOCK AND INDEX CODE SEE DAR-102719	07/01/03
4	SEE DAR 109500	02/25/04

NOTES:

1. MAXIMUM SURFACE ROUGHNESS TO BE 250 UNLESS OTHERWISE NOTED.
2. REMOVE ALL BURRS, SCALE, OIL, AND SHARP EDGES. REDUCE EDGES TO .060 ±.020 R OR .06 X 45° CHAMFER. UNLESS OTHERWISE NOTED
3. REMOVED
4. THE FINAL OVERPACK ASSEMBLY SHALL BE SOAP BUBBLE LEAK TESTED PER ASME B&PV CODE, SECTION V, ARTICLE 10 APPENDIX I USING A TEST PRESSURE OF 10 PSIG. +5, −0, AND WITH THE TOP AND BOTTOM FLANGES TORQUED TO 350 +25 −0 FT LBS.
5. THE AIR LEAK TEST SHALL BE WITNESSED BY AN INSPECTOR QUALIFIED PER ASNT SNT-TC-1A LEVEL II OR III.
6. ALL SURFACES EXCEPT O-RING GROOVE SURFACES, THEIR MATING SURFACES, AND THREADED HOLES ARE TO BE SAND BLASTED CLEAN PER SSPC-SP5.
7. REMOVED
8. REMOVED
9. REMOVED
10. APPLY ITEM 18 TO ITEMS 16 AND 17 AND ALL UNPAINTED SURFACES PER MANUFACTURER'S RECOMENDATIONS.
11. LUBRICATE ALL THREADED FASTENERS WITH COLLOIDAL GRAPHITE AND ALCOHOL, ITEM 20, PRIOR TO ASSEMBLY.
12. ALL SURFACES EXCEPT O-RING GROOVE SURFACES, THEIR MATING SURFACES, AND THREADED HOLES ARE TO BE PAINTED WITH TWO COATS OF ITEM 21, PER MANUFACTURER'S INSTRUCTIONS EXCEPT AS NOTED.
13. SEE DRAWING 513174 FOR MARKINGS AND TORQUE VALUES

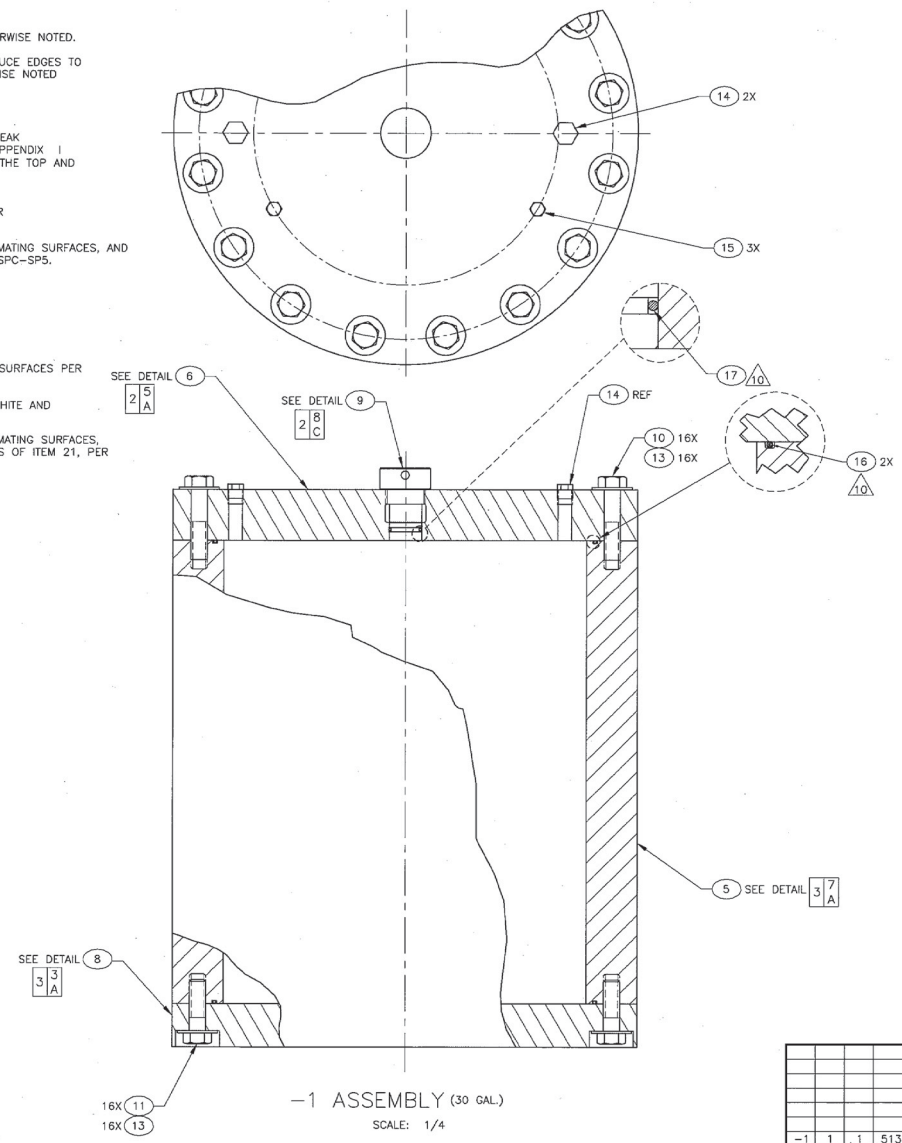

−1 ASSEMBLY (30 GAL.)
SCALE: 1/4

QTY REQD	SAFETY CAT.	PART OR IDENTIFYING NO.	NOMENCLATURE OR DESCRIPTION	MATERIAL/SPECIFICATION OR VENDOR NAME	ITEM NO.
	AR	CG	PAINT, AMERLOCK 400, WHITE	AMERON INTERNATIONAL	21
	AR	CG	NEO LUBE		20
					19
	AR	CG	SUPER-O-LUBE	LUBRICANT / PARKER	18
	1	LSC	2-330 COMPOUND N674-70	O-RING / PARKER SEAL GROUP	17
	2	LSC	2-475 COMPOUND N674-70	O-RING / PARKER SEAL GROUP	16
	3	CG		CAP SCREW, HEX HEAD 5/8-11 UNC-2A X 0.75 / CARBON STEEL	15
	2	SS		PIPE PLUG, 3/4-14 NPT / CARBON STEEL ASTM A105	14
	32	CG		WASHER, FLAT, 2.75 OD X 1.25 ID X 0.16 THICK / CARBON STEEL	13
					12
	16	SS		BOLT, HEAVY HEX HEAD, 1 1/8-8 UN-2A X 3 1/2 LG / CARBON STEEL, ASTM A193 GRADE B7	11
	16	SS		BOLT, HEAVY HEX HEAD, 1 1/8-8 UN-2A X 5 LG / CARBON STEEL, ASTM A193 GRADE B7	10
	1	SS	−9	PLUG / ROUND BAR, CS, ASTM A108 GR 12L14 CD	9
	1	SS	−8	BOTTOM FLANGE / PLATE, CARBON STEEL, ASTM A36	8
			−7	REMOVED	7
	1	SS	−6	TOP FLANGE / PLATE, CARBON STEEL, ASTM A36	6
	1	SS	−5	SHELL / CARBON STEEL, ASTM A105 OR ASTM A106 GR B	5
					4
					3
					2
	SS	−1	30 GAL OVERPACK ASSEMBLY		1

PARTS LIST

DASH NO.	NEXT QTY REQD	FINAL QTY REQD	NEXT ASSY
−1	1	1	513174-3

APPLICATION

DIMENSIONING AND SYMBOLOGY ARE AMERICAN NATIONAL STANDARD UNLESS OTHERWISE SPECIFIED
SURFACE ROUGHNESS "RS"
DIMENSIONS AND TOLERANCES ARE IN INCHES
TOLERANCES: .X = ±.1
DECIMALS: .XX = ±.03
.XXX = ±.010
FRACTIONS ± 1/8
ANGULAR ± 2°
DO NOT SCALE DRAWING

SUBCONTRACT NO.
REQUESTER: Craig Tyler
DESIGN: Kevin Skinner
DRAWN: L.D. TULIUS
PROJECT NO. 15638
SPEC CODE
FOR REVIEW/APPROVAL SIGNATURES SEE DAR NO. 42167
EFFECTIVE DATE: 3/20/2000

INEEL (INEL National Engineering & Environmental Laboratory) BECHTEL BWXT IDAHO, LLC

30 GALLON STORAGE AND CHARACTERIZATION OVERPACK FOR RH-TRU WASTE

SIZE	CAGE CODE	INDEX CODE NUMBER AREA	TYPE	SL	DRG	DWG-	REV
D		098	0628	47	090	511342	4

SCALE: NOTED
SHEET 1 OF 3

File: 511342D1-4.dwg ID: TOMLEL Drawn in Model Space
Path: S:\CAMPENDIWORK Date: 02/19/04 - 1:04 P.M.

4	3	2	1	SHEET
3	3	3	3	REV

REV STATUS OF SHEETS

REVISIONS

REV	DESCRIPTION	EFFECTIVE DATE:
1	SEE DAR NUMBER 15791.	09/16/98
2	SEE DAR NO. 17631	2-24-99
3	SEE DAR NO. 43989	3/20/2000

NOTES:

1. MAXIMUM SURFACE ROUGHNESS TO BE 250 UNLESS OTHERWISE NOTED.
2. REMOVE ALL BURRS, SCALE, OIL, AND BREAK ALL OD CORNERS OF SHELL AND FLANGE TO 1/8 ± 1/32 RADIUS OR CHAMFER.
3. MATERIAL SUBSTITUTIONS ALLOWED WITH WRITTEN APPROVAL FROM IDAHO NATIONAL ENGINEERING AND ENVIRONMENTAL LABORATORY.
4. REMOVED
5. REMOVED
6. REMOVED
7. REMOVED
8. REMOVED
9. REMOVED
10. REMOVED
11. REMOVED
12. REMOVED
13. IT IS PERMISSIBLE TO FABRICATE THE FLANGE FROM A CARBON STEEL BLIND PIPE FLANGE, 20-INCH, CLASS 600 LB, ASTM A105; HOWEVER, THE HOLES AND HOLE PATTERN SHALL BE PER THIS DRAWING.
14. THE FINAL OVERPACK ASSEMBLY SHALL BE SOAP BUBBLE LEAK TESTED USING A TEST PRESSURE OF 10 ± 5 PSI. HOLD THE TEST PRESSURE FOR A MINIMUM OF 15 MINUTES PRIOR TO THE TEST. THE OVERPACK MUST PASS THE TEST.
15. REMOVED
16. THE AIR LEAK TEST SHALL BE WHITNESSED BY AN INSPECTOR QUALIFIED PER ASNT SNT-TC-1A LEVEL II OR III.
17. ALL SURFACES EXCEPT O-RING GROOVE SURFACES, THEIR MATING SURFACES, AND THREADED HOLES ARE TO BE SAND BLASTED CLEAN PER SSPC-SP5. ALL SURFACES EXCEPT O-RING GROOVE SURFACES, THEIR MATING SURFACES, AND THREADED HOLES ARE TO BE PAINTED WITH TWO COATS OF ITEM 19, PER MANUFACTURER'S INSTRUCTIONS EXCEPT AS NOTED.
18. REMOVED
19. REMOVED
20. REMOVED
21. REMOVED
22. MARK "EMPTY WEIGHT XXXX LBS" ON THE SIDE OF THE OVERPACK, WITH 3/4 INCH HIGH CHARACTERS USING BLACK ENAMEL PAINT, WHERE XXXX REPRESENTS THE OVERPACK WEIGHT ROUNDED TO THE NEAREST ±10 POUNDS.
23. MARKING SHALL BE 1/4" HIGH AND PRODUCED INDIVIDUALLY OR IN GROUPS BY IMPACT FORCE APPLIED BY HAMMER OR OTHER DEVICE TO DRIVE STAMP INTO THE MATERIAL. "X" INDICATES OVERPACK ASSEMBLY NUMBER.
24. APPLY ITEM 22 TO ITEMS 15 AND 16 AND ALL UNPAINTED SURFACES PER MANUFACTURER'S RECOMENDATIONS.

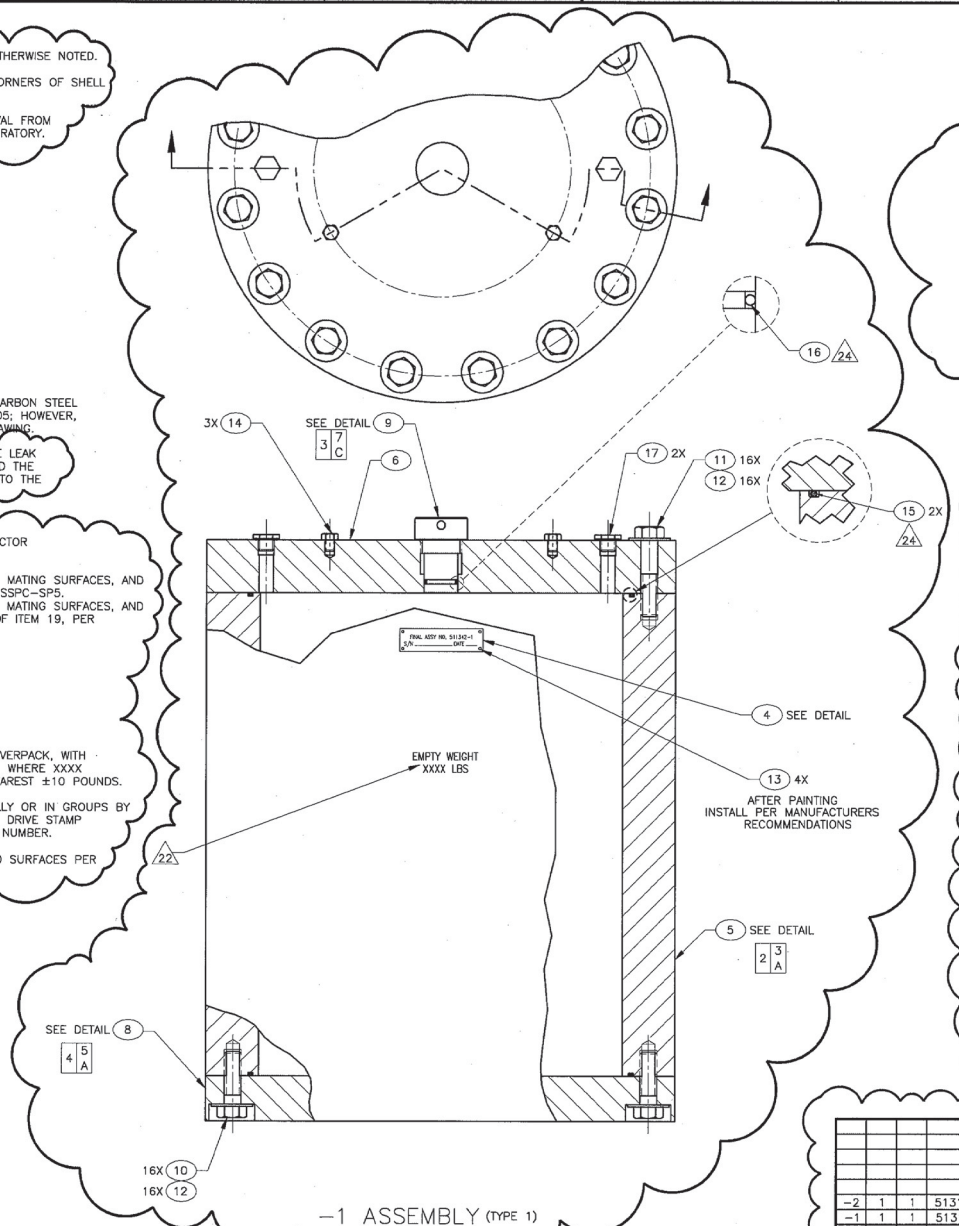

-1 ASSEMBLY (TYPE 1)

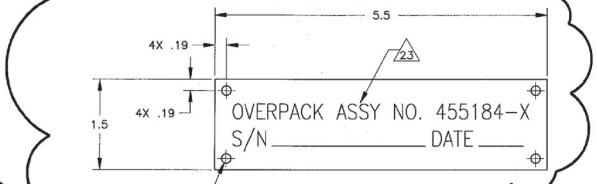

4 DETAIL
SCALE: 1/1

QTY REQD -2	QTY REQD -1	QUAL. LEVEL	PART OR IDENTIFYING NO.	NOMENCLATURE OR DESCRIPTION	MATERIAL SPECIFICATION	ITEM NO.
AR	AR	2	SUPER-O-LUBE	LUBRICANT	PARKER	22
16		2		BOLT, HEX HEAD, 1 1/8-8 UN-2A X 5.00 LG	CARBON STEEL, ASTM A193 GRADE B7	21
16		2		BOLT, HEX HEAD, 1 1/8-8 UN-2A X 3.50 LG	CARBON STEEL, ASTM A193 GRADE B7	20
	AR	3		PAINT, AMERLOCK 400, WHITE	AMERON INTERNATIONAL	19
			-18	REMOVE		18
2	2	3		PIPE PLUG, 3/4-14 NPT	PVC	17
1	1	3	2-330 COMPOUND N674-70	O-RING	PARKER SEAL GROUP	16
2	2	3	2-475 COMPOUND N674-70	O-RING	PARKER SEAL GROUP	15
3	3	3		CAP SCREW, HEX HEAD 5/8-11 UNC-2A X 0.75	CARBON STEEL	14
4	4	3		RIVET, DOMED HEAD ø1/8 x .196-.275 GRIP	SST	13
32	32	3		WASHER, FLAT, 2.75 OD X 1.25 ID X 0.16 THICK	CARBON STEEL	12
	16	2		BOLT, HEX HEAD, 1 1/8-7 UNC-2A X 5.00 LG	CARBON STEEL, ASTM A193 GRADE B7	11
	16	2		BOLT, HEX HEAD, 1 1/8-7 UNC-2A X 3.50 LG	CARBON STEEL, ASTM A193 GRADE B7	10
1	1	3	-9	PLUG	ROUND BAR, CS, ASTM A108 GR 12L14 CD	9
1	1	3		BASE 13	PLATE, CARBON STEEL, ASTM A36	8
		3		SHELL, TYPE 2	HSS 32 X 3.50 CARBON STEEL, ASTM A106	7
	1	3		TOP FLANGE 13	PLATE, CARBON STEEL, ASTM A36	6
	1	3		SHELL, TYPE 1	HSS 32 X 3.50 CARBON STEEL, ASTM A106	5
1	1	3	-4	ID PLATE	SHEET, 22 GA (.0293 THK) 304 SST ASTM A240	4
			-3	REMOVE		3
		2	-2	30 GAL OVERPACK ASSEMBLY, TYPE 2		2
		2	-1	30 GAL OVERPACK ASSEMBLY, TYPE 1		1

PARTS LIST

DASH NO.	NEXT QTY REQD	FINAL QTY REQD	NEXT ASSY
-2	1	1	513174-2
-1	1	1	513174-1

APPLICATION

DIMENSIONING AND SYMBOLOGY ARE AMERICAN NATIONAL STANDARD UNLESS OTHERWISE SPECIFIED
SURFACE ROUGHNESS 125
DIMENSIONS AND TOLERANCES ARE IN INCHES
TOLERANCES: .X = ± .1
DECIMALS: .XX = ± .03
.XXX = ± .010
FRACTIONS ± 1/8
ANGULAR ± 2°
DO NOT SCALE DRAWING

SUBCONTRACT NO.
REQUESTER: Craig Tyler
DESIGN: Kevin Skinner
DRAWN: EE.THOMAS
PROJECT NO. 15638
SPEC CODE
FOR REVIEW/APPROVAL SIGNATURES SEE DAR NO. 14307
EFFECTIVE DATE: 05/19/98

LOCKHEED MARTIN

STORAGE AND CHARACTERIZATION OVERPACK FOR RH-TRU WASTE (BOLTED BASE CONSTRUCTION)

SIZE D | CAGE CODE 01MF3 | INDEX CODE NUMBER AREA 400 TYPE 9999 GL 48 DRG 530 | DWG- 455184 | REV 3
SCALE: 1/4 | SHEET 1 OF 4

File: 455184D1-3.dwg ID: GRS Path: P:\1779 - Waste Con Drawn in Model Space Date: 03/20/00 - 08:01 AM

FNT-01-REV 2

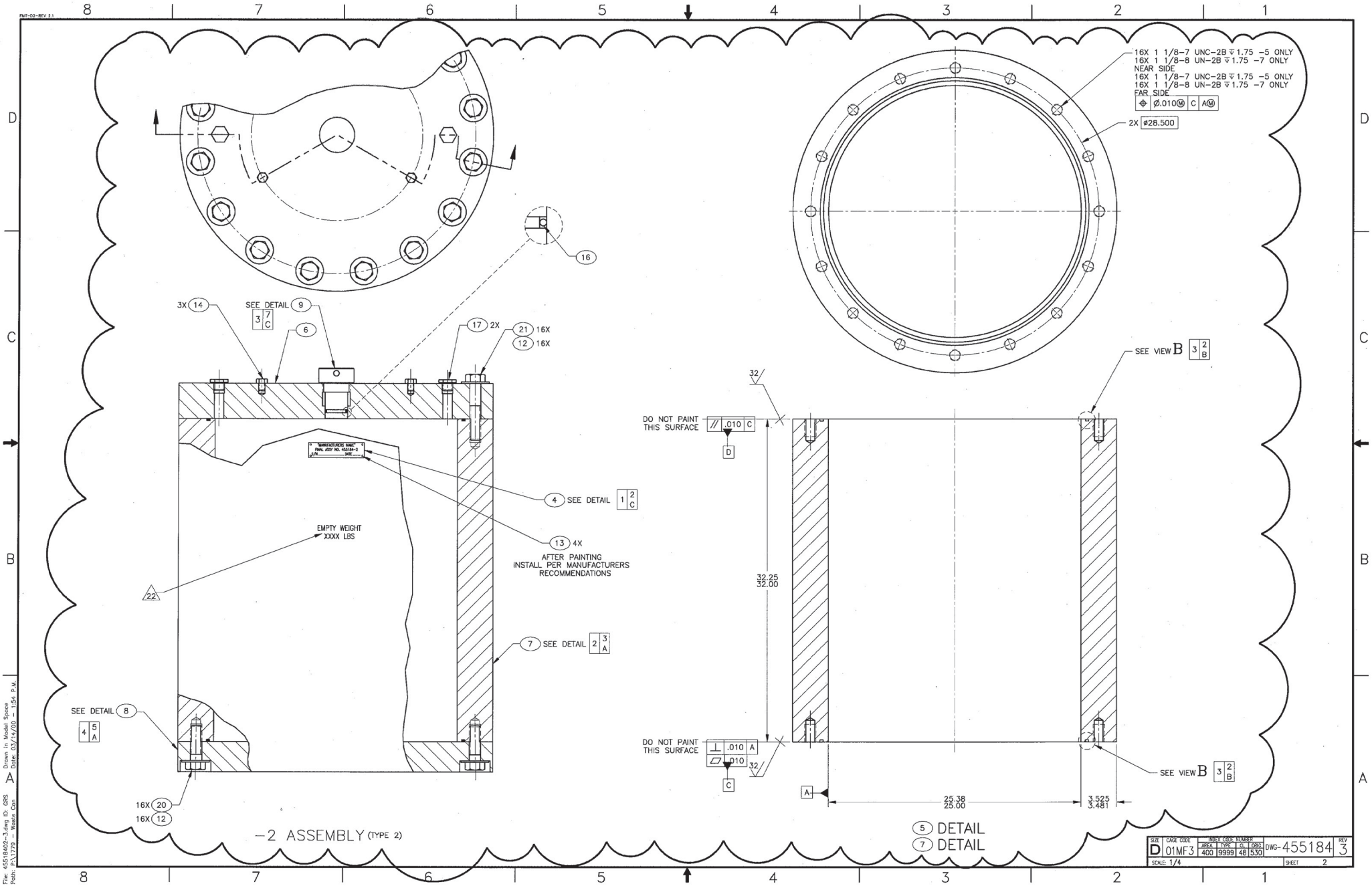
16X 1 1/8-7 UNC-2B ↧1.75 -5 ONLY
16X 1 1/8-8 UN-2B ↧1.75 -7 ONLY
NEAR SIDE
16X 1 1/8-7 UNC-2B ↧1.75 -5 ONLY
16X 1 1/8-8 UN-2B ↧1.75 -7 ONLY
FAR SIDE
⌖ Ø.010Ⓜ C AⓂ
2X Ø28.500
SEE VIEW B 3 2 B
32
DO NOT PAINT THIS SURFACE
// .010 C
D
32.25
32.00
DO NOT PAINT THIS SURFACE
⊥ .010 A
▱ .010
C
A
25.38
25.00
3.525
3.481
16
3X 14
SEE DETAIL 9
3 7 C
6
17 2X
21 16X
12 16X
"MANUFACTURERS NAME"
FINAL ASSY NO. 455184-2
S/N SHOP
4 SEE DETAIL 1 2 C
13 4X
AFTER PAINTING
INSTALL PER MANUFACTURERS
RECOMMENDATIONS
EMPTY WEIGHT
XXXX LBS
22
7 SEE DETAIL 2 3 A
SEE DETAIL 8
4 5 A
16X 20
16X 12
-2 ASSEMBLY (TYPE 2)
5 DETAIL
7 DETAIL
SIZE D
CAGE CODE 01MF3
INDEX CODE NUMBER
AREA 400 TYPE 9999 CL 48 QRD 530
DWG- 455184
REV 3
SCALE: 1/4
SHEET 2
FNT-D2-REV 2.1
File: 455184D2-3.dwg ID: GRS
Path: P:\1779 - Waste Con
Drawn in Model Space
Date: 03/14/00 - 1:54 P.M.

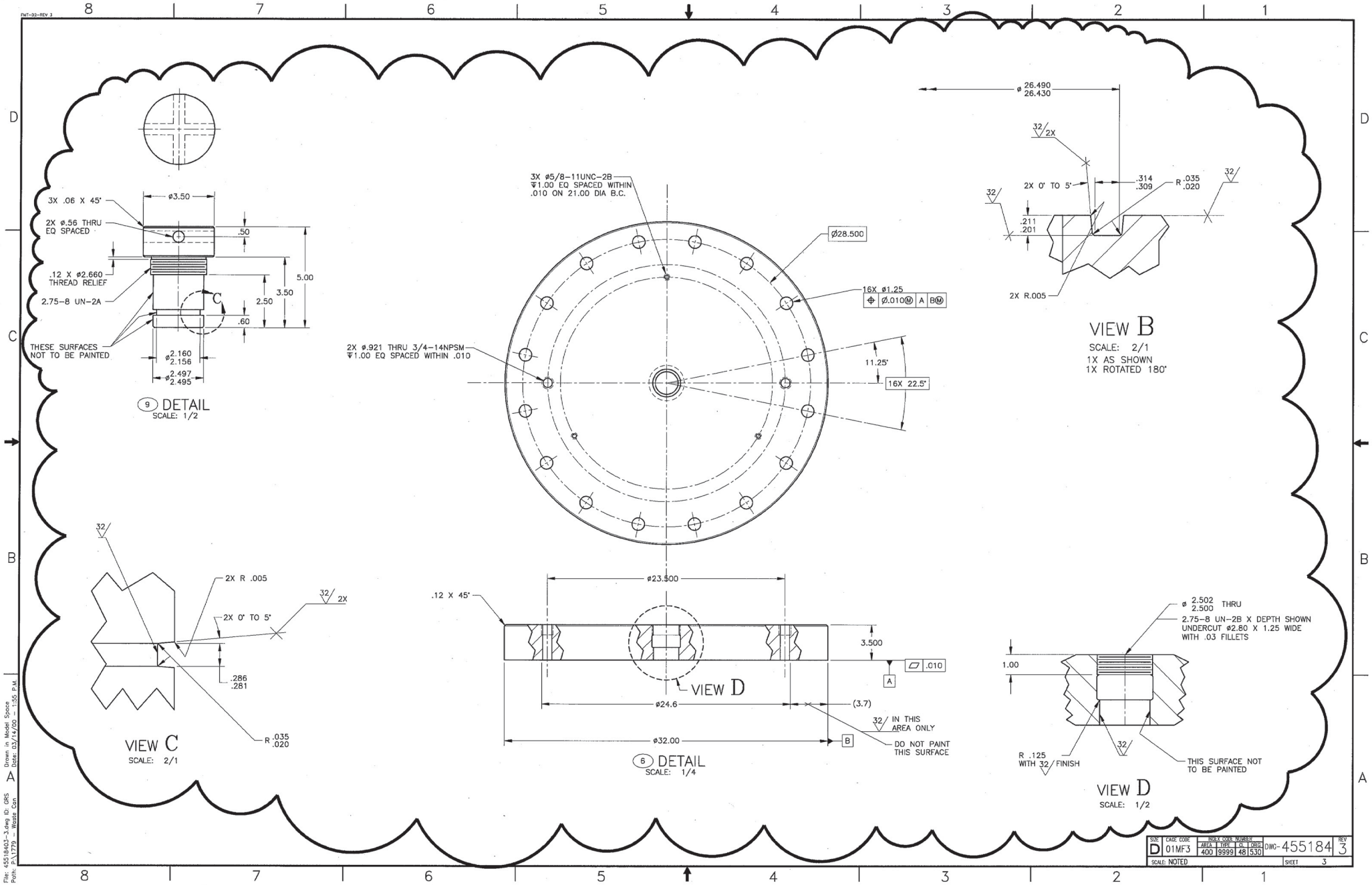
FMT-D2-REV 3
3X .06 X 45°
2X ø.56 THRU EQ SPACED
.12 X ø2.660 THREAD RELIEF
2.75-8 UN-2A
THESE SURFACES NOT TO BE PAINTED
ø3.50
.50
5.00
3.50
2.50
.60
ø2.160 2.156
ø2.497 2.495
9 DETAIL
SCALE: 1/2
3X ø5/8-11UNC-2B ↧1.00 EQ SPACED WITHIN .010 ON 21.00 DIA B.C.
Ø28.500
16X ø1.25
⌖ Ø.010Ⓜ A BⓂ
2X ø.921 THRU 3/4-14NPSM ↧1.00 EQ SPACED WITHIN .010
11.25°
16X 22.5°
ø 26.490 26.430
32 2X
2X 0° TO 5°
.314 .309
R .035 .020
.211 .201
2X R.005
VIEW B
SCALE: 2/1
1X AS SHOWN
1X ROTATED 180°
2X R .005
2X 0° TO 5°
.286 .281
R .035 .020
VIEW C
SCALE: 2/1
.12 X 45°
ø23.500
3.500
.010
A
VIEW D
ø24.6
(3.7)
ø32.00
B
32 IN THIS AREA ONLY
DO NOT PAINT THIS SURFACE
6 DETAIL
SCALE: 1/4
ø 2.502 2.500 THRU
2.75-8 UN-2B X DEPTH SHOWN UNDERCUT ø2.80 X 1.25 WIDE WITH .03 FILLETS
1.00
R .125 WITH 32 FINISH
THIS SURFACE NOT TO BE PAINTED
VIEW D
SCALE: 1/2
SIZE D
CAGE CODE 01MF3
INDEX CODE NUMBER AREA 400 TYPE 9999 CL 48 ORG 530
DWG-455184
REV 3
SCALE: NOTED
SHEET 3
File: 455184D3-3.dwg ID: GRS
Path: P:\1779 - Wease Con
Drawn in Model Space
Date: 03/14/00 - 1:55 P.M.

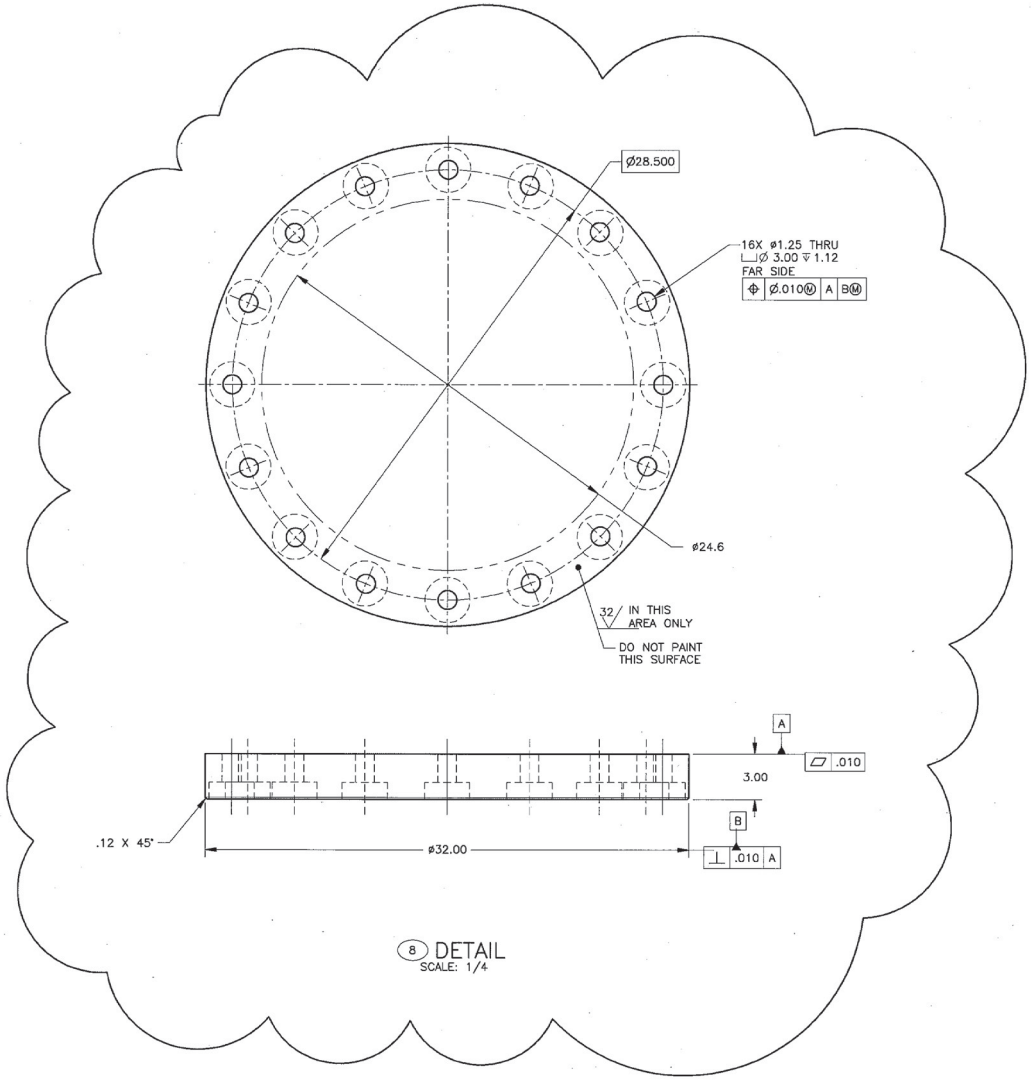

8 DETAIL
SCALE: 1/4

SIZE	CAGE CODE	INDEX CODE NUMBER					DWG-	REV
		AREA	TYPE	G.	ORG.			
D	01MF3	400	9999	48	530		455184	3
SCALE NOTED							SHEET 4	

File: 455184D4-3.dwg ID: GRS Drawn in Model Space
Path: P:\V79 - Waste Con Date: 03/14/00 - 1:59 P.M.

FMT-02-REV 2.1

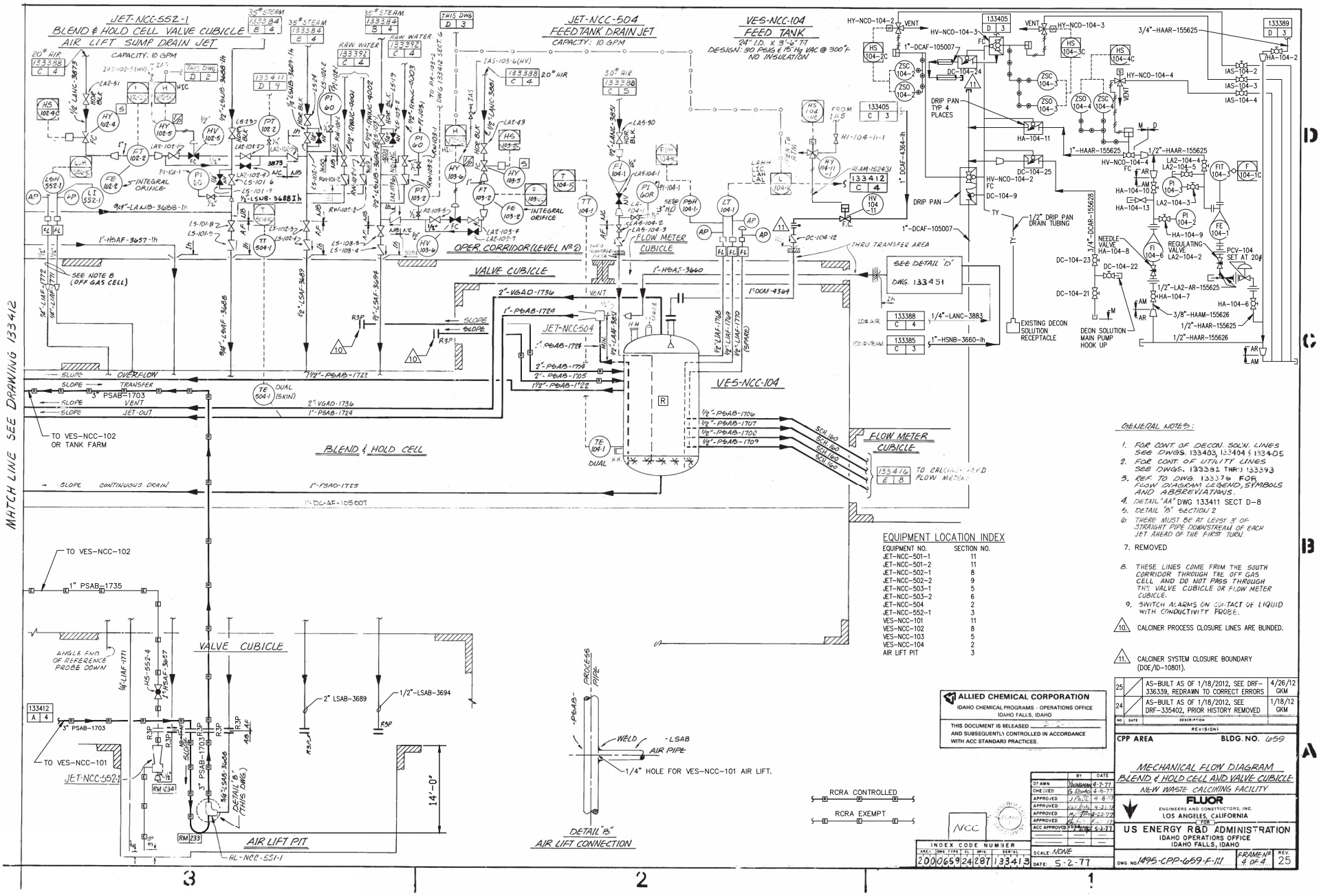

EQUIPMENT LOCATION INDEX

EQUIPMENT NO.	SECTION NO.
JET-NCC-501-1	11
JET-NCC-501-2	11
JET-NCC-502-1	8
JET-NCC-502-2	9
JET-NCC-503-1	5
JET-NCC-503-2	6
JET-NCC-504	2
JET-NCC-552-1	3
VES-NCC-101	11
VES-NCC-102	8
VES-NCC-103	5
VES-NCC-104	2
AIR LIFT PIT	3

GENERAL NOTES:

1. FOR CONT. OF DECON. SOLN. LINES SEE DWGS. 133403, 133404 & 133405
2. FOR CONT. OF UTILITY LINES SEE DWGS. 133381 THRU 133393
3. REF. TO DWG. 133376 FOR FLOW DIAGRAM LEGEND, SYMBOLS AND ABBREVIATIONS.
4. DETAIL "AA" DWG 133411 SECT D-8
5. DETAIL "B" SECTION 2
6. THERE MUST BE AT LEPST 3' OF STRAIGHT PIPE DOWNSTREAM OF EACH JET AHEAD OF THE FIRST TURN.
7. REMOVED
8. THESE LINES COME FRM THE SOUTH CORRIDOR THROUGH THE OFF GAS CELL AND DO NOT PASS THROUGH THE VALVE CUBICLE OR FLOW METER CUBICLE.
9. SWITCH ALARMS ON CONTACT OF LIQUID WITH CONDUCTIVITY PROBE.
10. CALCINER PROCESS CLOSURE LINES ARE BLINDED.
11. CALCINER SYSTEM CLOSURE BOUNDARY (DOE/ID-10801).

NO	DATE	DESCRIPTION	
25		AS-BUILT AS OF 1/18/2012, SEE DRF-336339, REDRAWN TO CORRECT ERRORS	4/26/12 GKM
24		AS-BUILT AS OF 1/18/2012, SEE DRF-335402, PRIOR HISTORY REMOVED	1/18/12 GKM

REVISIONS

ALLIED CHEMICAL CORPORATION
IDAHO CHEMICAL PROGRAMS - OPERATIONS OFFICE
IDAHO FALLS, IDAHO

THIS DOCUMENT IS RELEASED _____ AND SUBSEQUENTLY CONTROLLED IN ACCORDANCE WITH ACC STANDARD PRACTICES.

	BY	DATE
DRAWN	Vaughan	4-7-77
CHECKED	G. Romo	4-8-77
APPROVED	J. Pace	4-8-77
APPROVED	[illegible]	4-21-77
APPROVED	[illegible]	4-22-77
APPROVED	[illegible]	[illegible]
ACC APPROVED	[illegible]	5-2-77

SCALE: NONE
DATE: 5-2-77

INDEX CODE NUMBER
AREA 2000 | DWG TYPE 659 | SYS 24 | DWG 287 | SERIAL 133413

CPP AREA — BLDG. NO. 659

MECHANICAL FLOW DIAGRAM
BLEND & HOLD CELL AND VALVE CUBICLE
NEW WASTE CALCINING FACILITY

FLUOR
ENGINEERS AND CONSTRUCTORS, INC.
LOS ANGELES, CALIFORNIA
FOR
US ENERGY R&D ADMINISTRATION
IDAHO OPERATIONS OFFICE
IDAHO FALLS, IDAHO

DWG. NO. 1495-CPP-659-F-111 — FRAME No. 4 OF 4 — REV. 25

File: 133413-25.dwg
Path: V:\Designs\INTEC\MISC\INTEC Misc Drafting\Controlled DWGS\DRF-336339 DWG-133413
Date: 04/26/12 – 3:07 PM Layout Name: Model
ID: MUNNIKA

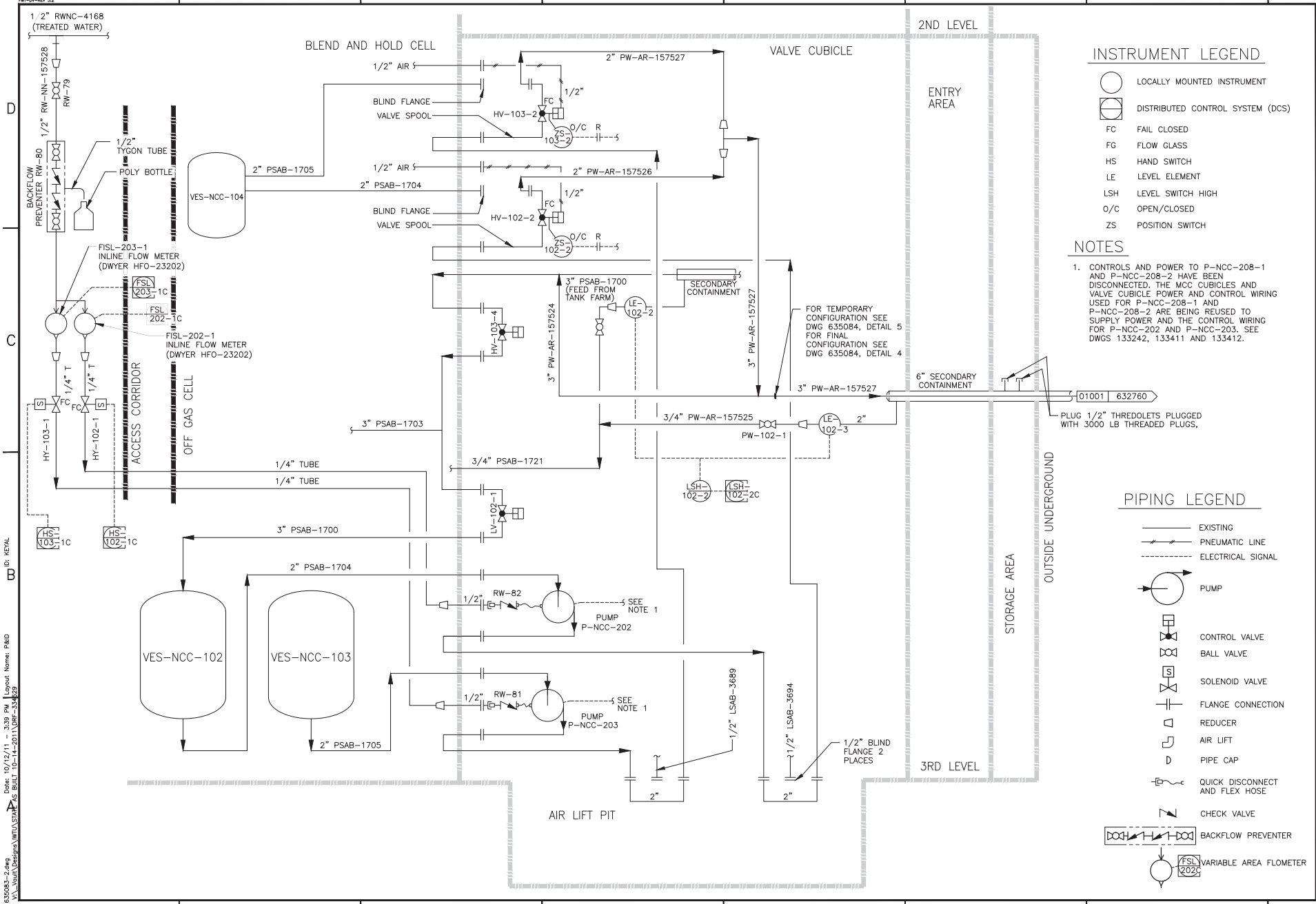

INSTRUMENT LEGEND

- LOCALLY MOUNTED INSTRUMENT
- DISTRIBUTED CONTROL SYSTEM (DCS)

FC	FAIL CLOSED
FG	FLOW GLASS
HS	HAND SWITCH
LE	LEVEL ELEMENT
LSH	LEVEL SWITCH HIGH
O/C	OPEN/CLOSED
ZS	POSITION SWITCH

NOTES

1. CONTROLS AND POWER TO P-NCC-208-1 AND P-NCC-208-2 HAVE BEEN DISCONNECTED. THE MCC CUBICLES AND VALVE CUBICLE POWER AND CONTROL WIRING USED FOR P-NCC-208-1 AND P-NCC-208-2 ARE BEING REUSED TO SUPPLY POWER AND THE CONTROL WIRING FOR P-NCC-202 AND P-NCC-203. SEE DWGS 133242, 133411 AND 133412.

PIPING LEGEND

- EXISTING
- PNEUMATIC LINE
- ELECTRICAL SIGNAL
- PUMP
- CONTROL VALVE
- BALL VALVE
- SOLENOID VALVE
- FLANGE CONNECTION
- REDUCER
- AIR LIFT
- PIPE CAP
- QUICK DISCONNECT AND FLEX HOSE
- CHECK VALVE
- BACKFLOW PREVENTER
- FSL 202C VARIABLE AREA FLOMETER

REV	DESCRIPTION
2	AS BUILT AS OF 10/5/11, INCORP'D FDC 4572, 7144, 7639, 7693, SEE DRF-334529
1	SEE DRF-316691

REVISION HISTORY

NO SCALE

DESIGN PHASE:	
QUALITY LEVEL:	3
HORIZONTAL SCALE	NONE
VERTICAL SCALE	NA
FOR DRAWING INDEX SEE DRAWING NO.	635080

SIGNATURES/DATES APPLY TO CURRENT RELEASE ONLY

	SIGN AND DATE
DESIGN: NA	– –
DRAFTER: A. KEY	Angela Key CWI 2011.10.12 15:40:22 -06'00'
TECHNICAL CHECK: NA	– –
ENG GROUP SUPERVISOR: NA	– –
DESIGN LEAD: NA	– –
DRAFTING CHECK/ EFFECTIVE DATE: G. MACE	Gerre Mace CWI 2011.10.12 15:49:45 -06'00'

Idaho Cleanup Project

INTEC IWTU MODIFICATIONS TO NWCF VALVE CUBICLE

P & ID

PROJECT NUMBER: 25051

INDEX CODE NUMBER			
AREA	DISC	CA	CODE
200	0659	24	136

SIZE D DWG-635083 REV 2

DRF NO. 126630 SHEET P-3

FMT-DV-REV 3.2

File: 635083-2.dwg
Path: V:_Data\Designs\IWTU\STAGE 2\ AS BUILT 10-14-2011\DRF-334529
Date: 10/12/11 – 3:39 PM Layout Name: P&ID
ID: KEYAL

FMT-DV-REV 2014-01-29

INSTRUMENTATION IDENTIFICATION SYMBOLS

	FIRST-LETTER		SUCCEEDING-LETTERS		
	MEASURED OR INITIATING VARIABLE	MODIFIER	READOUT OR PASSIVE	OUTPUT FUNCTION	MODIFIER
A	ANALYSIS		ALARM	FUNCTION	
B	BURNER, COMBUSTION		USER'S CHOICE	USER'S CHOICE	USER'S CHOICE
C	CONDUCTIVITY			CONTROL	CLOSE
D	DENSITY OR SPG	DIFFERENTIAL			
E	VOLTAGE		SENSOR (PRIMARY ELEMENT)		
F	FLOW RATE	RATIO (FRACTION)			
G	USER'S CHOICE		GLASS, VIEWING DEVICE		
H	HAND				HIGH
I	CURRENT (ELECTRICAL)		INDICATE		
J	POWER	SCAN			
K	TIME, TIME SCHEDULE	TIME RATE OF CHANGE			
L	LEVEL		LIGHT		LOW
M	MOTOR	MOMENTARY			MIDDLE, INTER-MEDIATE
N	USER'S CHOICE		USER'S CHOICE	USER'S CHOICE	USER'S CHOICE
O	USER'S CHOICE		ORIFICE, RESTRICTION		OPEN
P	PRESSURE, VACUUM		POINT (TEST) CONNECTION		
Q	QUANTITY	INTEGRATE TOTALIZE			
R	RADIATION		RECORD		
S	SPEED, FREQUENCY	SAFETY		SWITCH	
T	TEMPERATURE			TRANSMIT	
U	MULTIVARIABLE		MULTIFUNCTION	MULTIFUNCTION	MULTIFUNCTION
V	VISCOSITY			VALVE, DAMPER, LOUVER	
W	WEIGHT, FORCE		WELL		
X	VIBRATION	X AXIS	UNCLASSIFIED	UNCLASSIFIED	UNCLASSIFIED
Y	EVENT, STATE OR PRESENCE	Y AXIS		RELAY, COMPUTE, CONVERT	
Z	POSITION/DIMENSION	Z AXIS		DRIVER, ACTUATOR, UNCLASSIFIED FINAL CONTROL ELEMENT	

GENERAL NOTES:

1. INTEC INSTRUMENTATION SYMBOLOGY SHALL BE BASED ON ISA STANDARD 5.1
2. A COMPLETE INSTRUMENT IDENTIFICATION NUMBER FOR INTEC IS CONSTRUCTED AS FOLLOWS:

FIT-FC-216-002A

- SUFFIX PER ISA 5.1-84, PARA. 4.3.3.
- SEQUENTIAL NUMBER
- TEAM MEMBER
- AREA DESIGNATION
- INSTRUMENT FUNCTION FROM TABLE

PILOT LIGHT DESIGNATIONS

R	RED	UNSAFE	EMERGENCY, DANGER, HIGH PRIORITY ALARM, CLOSED/OFF/STOPPED (INACTIVE) CLOSED/ON/FLOWING (ELECTRICAL POWER DISTRIBUTION) *
Y	YELLOW	CAUTION	HAZARD SECOND PRIORITY ALARM ABNORMAL STATE
G	GREEN	SAFE	SAFE, SATISFACTORY, OPEN/ON/FLOWING (ACTIVE) OPEN/OFF/STOPPED (ELECTRICAL POWER DISTRIBUTION) *
LB	LIGHT BLUE (CYAN)	STATIC AND SIGNIFICANT	EQUIPMENT IN SERVICE MAJOR LABELS
DB	DARK BLUE	NON ESSENTIAL	EQUIPMENT IN STANDBY
M	MAGENTA	RADIATION	RADIATION ALARM/CAUTION
W	WHITE	DYNAMIC DATA	MEASUREMENT AND STATE INFORMATION SYSTEM MESSAGES TREND ACTIVE SEQUENCE STEP

* – THE ASSOCIATED COLOR MEANINGS ARE FOR ELECTRICAL POWER DISTRIBUTION SYSTEM DISPLAYS ONLY.

Randy Eastman
CWI
2014.03.20 08:00:00 -06'00'

PROFESSIONAL ENGINEER REGISTERED 4307 STATE OF IDAHO RANDY EASTMAN

I CERTIFY THAT THIS DRAWING REFLECTS THE CURRENT CONSTRUCTED CONDITION AS OF 3/18/2014

REVISION HISTORY

REV	DESCRIPTION
1	AS-BUILT AS OF 3/18/2014, SUBMITTAL TO STATE FOR RCRA PERMIT, SEE DRF-341590

Idaho Cleanup Project CH2M:WG IDAHO, LLC

CPP-666

RH-TRU DISTILLATION SYSTEM

INSTRUMENTATION LEGEND SHEET 1

SIGNATURES/DATES APPLY TO CURRENT RELEASE ONLY

	SIGN AND DATE
DESIGN: NA	– –
DRAFTER: J. MONCUR	Jim Moncur CWI 2014.03.19 13:05:32 -06'00'
TECHNICAL CHECK: NA	– –
ENG GROUP SUPERVISOR: NA	– –
DESIGN LEAD/AUTHORITY: D. MORGAN	David Morgan CWI 2014.03.20 08:38:36 -06'00'
DRAFTING CHECK/ EFFECTIVE DATE: K. KELLER	Kris Keller CWI 2014.03.20 09:52:10 -06'00'

NO SCALE

DESIGN PHASE:

QUALITY LEVEL: 3

HORIZONTAL SCALE: NONE

VERTICAL SCALE: NA

FOR DRAWING INDEX SEE DRAWING NO. 571426

PROJECT NUMBER: 31720

INDEX CODE NUMBER			
AREA	TYPE	CL	ORIG.
200	0666	24	136

SIZE D DWG- 571621 REV 1

DRF NO. 338620 SHEET P-1

File: 571621-1.dwg
Path: K:\RH-TRU Distillation\Drawings\DRF-341590
Date: 03/19/14 – 11:09 AM Layout Name: Layout1
ID: MXJ

FMT-DV-REV 2014-01-29

PROCESS LINES

- PRIMARY PROCESS
- PRIMARY PROCESS (UNDERGROUND)
- SECONDARY PROCESS
- SECONDARY PROCESS (UNDERGROUND)
- BURIED OR EMBEDDED PIPE
- HEAT TRACING — E-ELECTRICALLY TRACED (SHOWN) S-STEAM TRACED
- INL VENDOR — INL-VENDOR INTERFACE
- SEISMIC REQUIREMENTS APPLY BETWEEN FLAGS (FOR EXACT PHYSICAL DESCRIPTION OF SEISMIC BOUNDARIES REFER TO APPROPRIATE ISOMETRIC)

PIPING SYMBOLS

- INTERLOCK
- SPRAY NOZZLE
- REDUCER/INCREASER
- FLOW SIGHT GLASS
- VESSEL PORTS
- DRAIN
- STRAINER
- EXPANSION JOINT
- HOSE
- FLEXIBLE CONNECTION
- QUICK DISCONNECT W/O CHECKS (SHOWN OPEN)
- QUICK DISCONNECT WITH CHECKS (SHOWN CLOSED)
- PLUG
- CAP
- BLIND FLANGE
- LOOP SEAL
- RESTRICTION ORIFICE PLATE
- TRAP
- LUBRICATOR
- WATER HAMMER ARRESTOR
- VAPOR TRAP
- HOSE BIBB
- ST-STEAM TRAP (SHOWN) DT-DRAIN TRAP AT-AIR TRAP CT-CONDENSATE TRAP
- MOISTURE SEPARATOR WITH AUTOMATIC DRAIN
- MOISTURE SEPARATOR WITH MANUAL DRAIN
- H HEPA FILTER (SHOWN) C COALESCING FILTER S SCREEN FILTER P PAPER ELEMENT FILTER M METAL FILTER F PREFILTER
- EDUCTOR
- ATM — OPEN TO ATMOSPHERE
- DU — DIELECTRIC UNION
- COOLING JACKET
- DRAIN
- UNION

VALVE STATUS

N.O. N.C.

- L.O. – LOCKED OPEN
- L.C. – LOCKED CLOSED
- N.O. – NORMALLY OPEN (SHOWN)
- N.C. – NORMALLY CLOSED (SHOWN)
- F.O. – FAIL OPEN
- F.C. – FAIL CLOSED
- F.L. – FAIL LOCKED IN LAST POSITION
- F.I. – FAIL INDETERMINATE

SELF-ACTUATING REGULATORS

- TCV X — TEMPERATURE REGULATOR
- PDCV X — DIFFERENTIAL-PRESSURE-REDUCING REGULATOR WITH INTERNAL AND EXTERNAL PRESSURE TAPS
- PCV X — BACKPRESSURE REGULATOR, SELF-CONTAINED
- PCV X — PRESSURE-REDUCING REGULATOR, SELF-CONTAINED, WITH HANDWHEEL ADJUSTABLE SET POINT
- PCV X — PRESSURE-REDUCING REGULATOR, WITH EXTERNAL PRESSURE TAP
- PCV X — BACKPRESSURE REGULATOR WITH EXTERNAL PRESSURE TAP
- PCV X, PI — PRESSURE-REDUCING REGULATOR, WITH INTEGRAL OUTLET PRESSURE RELIEF VALVE OPTIONAL PRESSURE INDICATOR
- PSE X — RUPTURE DISK PRESSURE
- PSE X — RUPTURE DISK VACUUM
- PSV X — VACUUM RELIEF
- PSV X — PRESSURE RELIEF
- PSV X, VAC, PRESS — PRESSURE AND VACUUM RELIEF
- MANOMETER

DRYERS

- GENERAL
- DESSICANT

VALVES

- GENERAL OR GATE
- GLOBE
- CHECK
- THREE-WAY
- FOUR-WAY
- DIAPHRAGM OR PINCH
- BALL
- BALL-3 WAY
- BUTTERFLY
- RESTRICTION ORIFICE DRILLED IN VALVE
- PLUG
- COCK
- NEEDLE
- STOP CHECK
- ANGLE
- SLIDE
- DAMPER OR LOUVER
- BACKDRAFT DAMPER

ACTUATORS

- HAND
- DIAPHRAGM
- DIAPHRAGM PRESSURE-BALANCED
- S — SOLENOID
- M — MOTOR
- CYLINDER WITH PILOT MOUNTING
- CYLINDER, SINGLE-ACTING SPRING-OPPOSED
- CYLINDER, DOUBLE-ACTING
- FLOAT
- DIAPHRAGM WITH POSITIONER
- SPRING OR WEIGHT
- S, R — LATCH-TYPE ACTUATOR WITH MANUAL RESET
- I/P, TY X, TCV X — CONTROL VALVE WITH ATTACHED ELECTRO-PNEUMATIC SIGNAL CONVERTER (I/P)
- I/P, TY X, TCV X — CONTROL VALVE WITH SEPARATELY MOUNTED ELECTRO-PNEUMATIC SIGNAL CONVERTER (I/P)

PUMPS AND COMPRESSORS

- COMPRESSOR
- BLOWER OR FAN (CENTRIFUGAL)
- CENTRIFUGAL PUMP
- VACUUM PUMP
- AIR FAN

HEAT TRANSFER

- WATER COOLED EXCHANGER
- WATER COOLED CONDENSER
- SHELL AND TUBE EXCHANGER
- HEAT EXCHANGER
- HEATER
- SUPERHEATER OR REHEATER
- ELECTRICAL HEATER

DRIVERS

- MOTOR
- SR — SPEED REDUCER (GEAR DRIVEN)
- SPEED REDUCER (BELT DRIVEN)

INSTRUMENT & EQUIPMENT IDENTIFICATION

SA FORMAT PROCESS VARIABLE IDENTIFIER — PLANT AREA

PIT-SPF 100-0318

TEAM MEMBER — SEQUENCE NUMBER

HV-SPF-XXXX
- UNIQUE NUMBER
- PLANT AREA
- EQUIPMENT IDENTIFIER

INSTRUMENT LINES

- INSTRUMENT AIR
- UNDEFINED SIGNALS
- PNEUMATIC SIGNALS
- ELECTRICAL SIGNALS
- HYDRAULIC SIGNALS
- CAPILLARY TUBING
- PLC COMMUNICATIONS LINK
- MECHANICAL LINK

INSTRUMENT SYMBOLS

- HARDWIRED LOGIC
- DIGITAL LOGIC CONTROLS INTEGRAL TO ICS
- LIGHT
- X FI-X — INDICATING FLOWMETER (ROTAMETER)
- X FI-X — INDICATING FLOWMETER WITH INTEGRAL THROTTLING VALVE
- X PI-X — PRESSURE INDICATOR WITH INTEGRAL ISOLATION VALVE
- H/O/A X HS-X — H/O/A – HAND/OFF/AUTO (SHOWN) S/S – START/STOP O/O – ON/OFF O/A/C – OPEN/AUTO/CLOSE O/C – OPEN/CLOSE S/S/J – START/STOP/JOG
- X TE-X — TEMPERATURE ELEMENT WITH THERMOWELL
- X — ΔT THERMAL MASS FLOWMETER; C CAMERA

GENERAL INSTRUMENT OR FUNCTION

DISCRETE INSTRUMENTS

- FIELD MOUNTED DEVICES
- PRIMARY LOCATION (PLC OR INTERFACE CABINET) CABINET LOCATION
- AUXILIARY LOCATION (NORMALLY INACCESSIBLE)
- NORMALLY INACCESSIBLE OR BEHIND-THE-PANEL

OPERATOR CONTROL STATION

- OCS SHARED DISPLAY INACCESSIBLE TO OPERATOR
- CONTROL LOGIC IN OCS ACCESSIBLE TO OPERATOR

PROGRAMMABLE LOGIC CONTROL

- CONTROL LOGIC IN PLC INACCESSIBLE TO OPERATOR
- CONTROL LOGIC IN PLC ACCESSIBLE TO OPERATOR
- COMPUTER FUNCTION FIELD MOUNT
- COMPUTER FUNCTION NORMALLY ACCESSIBLE TO OPERATOR

SYSTEM ABBREVIATION

AA	ATMOSPHERE AIR
ATM	ATMOSPHERE
COM	CARBON MONOXIDE MONITORING
CW	POTABLE WATER
CWR	CHILLED WATER RETURN
CWS	CHILLED WATER SUPPLY
DRN	DRAIN
DWR	DOMESTIC WATER RETURN
DWS	DOMESTIC WATER SUPPLY
EX	EXHAUST
FASS	FIXED AIR SAMPLING SYSTEM
FP	FIRE PROTECTION
H	HYDROGEN GAS
HA	HIGH PRESSURE AIR
He	HELIUM, ULTRA HIGH PURITY
HI	INSTRUMENT AIR 100#
HWR	HOT WATER RETURN
HWS	HOT WATER SUPPLY
HY	HYDRAULIC FLUID (THERMAL FLUID)
IA	INSTRUMENT AIR
LI5	INSTRUMENT AIR 50#
NR	INERT GAS
O2M	OXYGEN MONITORING
POG	PROCESS OFF-GAS
SO	SODIUM
STP	STANDBY POWER
SW	SANITARY WASTE
VS	STACK EXHAUST
VA	VACUUM
WG	WELDING GAS

PIPE MATERIAL ABBREVIATION

AM	STAINLESS STEEL TUBE
AR	STAINLESS STEEL PIPE
NH	POLYETHOLENE TUBE
NN	CARBON STEEL PIPE

PIPE LINE NUMBERING SYSTEM

3"-HW-SH-160001-H

- SIZE
- SYSTEM ABBREVIATION
- PIPE MATERIAL ABBREVIATION
- INSULATION
- LINE SEQUENCE NUMBER

EQUIPMENT IDENTIFIERS

AAV	ATMOSPHERIC AIR VALVE
AC	GLOVEBOX ATMOSHPERE CONTROLLER
ADV	AUTOMATIC DRAIN VALVE
AE	ANALYSIS ELEMENT
AHU	AIR HANDLING UNIT
BFP	BACK FLOW PREVENTER
BLW	BLOWER
BU	BUBBLER
BV	BALANCING VALVE
CAB	CABINET
CCU	COOLING COIL UNIT
CHR	CHILLER
CK	CHECK VALVE
CMP	COMPRESSOR
COND	CONDENSER
CRU	CONDENSATE RETURN UNIT
CT	CURRENT TRANSFORMER
CY	CONTROL RELAY
DSW	DISCONNECT SWITCH
DM	DEMISTER
DMP	DAMPER
DPE	DRIP PAN ELBOW
DRY	DRYER
DT	DRI-TRAIN
EF	EXHAUST FAN
EN	ENCLOSURE
ET	EXPANSION TANK
FA	FIRE ALARM
FA	FAN
FCO	FLOOR CLEAN OUT
FCU	FAN COIL UNIT
FD	FLOOR DRAIN
F	FILTER
FIT	FLOW INDICATING TRANSMITTER
FURN	FURNACE
GBX	GLOVEBOX
HIV	INSTRUMENT AIR 100# VALVE
HTR	HEATER
HE	HEAT EXCHANGER
JB	JUNCTION BOX
LUB	LUBRICATOR
MOT	MOTOR
MS	MOTOR STARTER
NC	NORMALLY CLOSED
NO	NORMALLY OPEN
NRV	INERT GAS VALVE
P	PUMP
POGV	PROCESS OFF-GAS VALVE
PSD	PUMP SUCTION DIFFUSER
SE	SPECIALIZED EQUIPMENT
SEP	SEPARATOR
STR	STRAINER
SV	SLIDE VALVE
TK	TANK
TR	TRAP
V	VALVE
VAC	VACUUM
VB	VACUUM BREAKER
VES	VESSEL
VIB	VIBRATION EQUIPMENT

NOTES:

1. GRAPHICAL SYMBOLS AND IDENTIFIERS ARE BASED ON ANSI/ASA.
2. INSTRUMENTATION SYMBOLS AND IDENTIFICATION FROM ISA

Randy Eastman
CWI
2014.03.26 11:00:36 -06'00'

PROFESSIONAL ENGINEER REGISTERED 4307 STATE OF IDAHO RANDY EASTMAN

I CERTIFY THAT THIS DRAWING REFLECTS THE CURRENT CONSTRUCTED CONDITION AS OF 3/18/2014

REVISION HISTORY

REV	DESCRIPTION
1	INCORPORATED FDC-9007, -9135, -9347, SEE DRF-341129
2	AS-BUILT AS OF 3/18/2014, SUBMITTAL TO STATE FOR RCRA
	PERMIT, SEE DRF-341590
3	AS-BUILT AS OF 3/18/2014, SUBMITTAL TO STATE FOR RCRA
	PERMIT, SEE DRF-341662

Idaho Cleanup Project — CHEM-WG IDAHO, LLC

CPP-666

RH-TRU DISTILLATION SYSTEM

INSTRUMENTATION LEGEND SHEET 2

SIGNATURES/DATES APPLY TO CURRENT RELEASE ONLY

	SIGN AND DATE
DESIGN: NA	– –
DRAFTER: J. WILLIAMS	Jason Williams Hukari 2014.03.26 10:36:48 -06'00'
TECHNICAL CHECK: NA	– –
ENG GROUP SUPERVISOR: NA	– –
DESIGN LEAD/AUTHORITY: D. MORGAN	David Morgan CWI 2014.03.26 10:55:12 -06'00'
DRAFTING CHECK/ EFFECTIVE DATE: K. KELLER	Kris Keller CWI 2014.03.26 11:03:09 -06'00'

NO SCALE

DESIGN PHASE:	
QUALITY LEVEL:	3
HORIZONTAL SCALE	NONE
VERTICAL SCALE	NA

FOR DRAWING INDEX SEE DRAWING NO. 571426

PROJECT NUMBER: 31720

INDEX CODE NUMBER			
AREA	TYPE	CL	ORIG
200	0666	24	136

SIZE D — DWG- 571622 — REV 3

DRF NO. 338620 — SHEET P-2

ID: WILLJT

Date: 03/26/14 – 10:10 AM Layout Name: Layout2

File: 571622-3.dwg

Path: K:\RH-TRU Distillation\Drawings\DRF-341662

FMT-D1-REV 2014-01-29

REVISIONS	
REV	DESCRIPTION
1	INCORPORATED FDCs 8784, 8889, 8961, 9121, 9300, AND 9370 SEE DRF-340057
2	INCORPORATED FDCs 9442, 9468, 9526, AND 9548 AS-BUILT AS OF 3/18/2014, SUBMITTAL TO STATE FOR RCRA PERMIT, SEE DRF-341137

NOTES:

1. REMOVE ALL BURRS AND SHARP EDGES.
2. ALL MACHINED FILLET RADII .03 MAXIMUM UNLESS OTHERWISE NOTED.
3. WELDING SHALL BE PERFORMED IN ACCORDANCE WITH ASME B31.3 USING ITEM 18.
4. (Q) VISUALLY INSPECT ALL WELDS IN ACCORDANCE WITH ASME B31.3, PARA. 341.4.1 (a) FOR NORMAL FLUID SERVICE. ACCEPTANCE CRITERIA SHALL BE PER ASME B31.3, PARA. 341.3.2.
5. (Q) PERFORM IN-PROCESS INSPECTION OF WELDS WHERE SPECIFIED PER ASME B31.3 PARA. 344.7 USING LIQUID PENETRANT EXAMINATION OF THE ROOT AND FINAL PASS.
6. (Q) LIQUID PENETRANT EXAMINATION SHALL BE PERFORMED IN ACCORDANCE WITH THE BPV CODE SECTION V, ARTICLE 6. ACCEPTANCE CRITERIA SHALL BE:
   a. ALL SURFACES TO BE EXAMINED SHALL BE FREE OF:
      (1) RELEVANT LINEAR INDICATIONS
      (2) RELEVANT ROUNDED INDICATIONS GREATER THAN 5MM (3/16")
      (3) FOUR OR MORE RELEVANT ROUNDED INDICATIONS IN A LINE SEPARATED BY 1.5MM (1/16") OR LESS, EDGE-TO-EDGE.
   b. CRACK LIKE INDICATIONS DETECTED, IRRESPECTIVE OF SURFACE CONDITIONS, ARE UNACCEPTABLE.
7. (Q) FINAL ASSEMBLY SHALL BE FREE OF DIRT, CHIPS, WELDING FLUX, SLAG, SCALE, OIL, GREASE, ETC. PERFORM A VISUAL INSPECTION OF THE FINAL ASSEMBLY PER ASTM A380, PARA 7.2.1.
8. MARK PER CWI STD-7006-2A OR STD-7006-2D IN 1/2" HIGH CHARACTERS WITH INFORMATION AS SHOWN WHERE "ZZ" IS A UNIQUE NUMBER ASSIGNED FOR EACH ASSEMBLY BUILT AND "YY" IS THE MEASURED WEIGHT OF THE -1 ASSEMBLY. LOCATE APPROXIMATELY WHERE SHOWN. FILL CHARACTERS WITH SANFORD T.E.C. MARKER #13401 OR #13501, ITW DYMON FORMULA Q404 INK OR OTHER HIGH-PURITY LOW-CHLORIDE BLACK INK THAT COMPLIES WITH ASTM C1217-00 OR RDT F7-3T. DO NOT APPLY VARNISH OVER MARKING.
9. (Q) VERIFY MARKINGS HAVE BEEN ACCURATELY APPLIED AND RECORD THE UNIQUE NUMBER AND MEASURED WEIGHT.
10. (Q) COMPLETED ASSEMBLY SHALL UNDERGO A PNEUMATIC LEAK TEST IN ACCORDANCE WITH ASME B31.3 AT A PRESSURE OF 16.5 TO 18.5 PSIG. "SNOOP" ALL CONNECTIONS FOR LEAKS. PRESSURE DROP SHALL NOT EXCEED 0.1 PSIG OVER A 10 MINUTE PERIOD.
11. TOLERANCES ON DECIMALS
    .XX = ± .06
    .XXX = ± .005
12. REMOVED
13. DESIGN PRESSURE: FULL VACUUM TO 15 PSIG.
14. DESIGN TEMPERATURE: DISTILLATION VESSEL – 1250° F, VAPOR PIPING – 1200°F
15. REMOVED
16. REMOVED
17. A 1/4 NPT TELLTALE HOLE SHALL BE PROVIDED IN ITEM 24 FOR TESTING THE ATTACHING WELDS ACCORDING TO ASME BPV CODE SECTION VIII, DIV. 1, UG-37(g). 5 PSIG AIR SHALL BE USED FOR THE TEST. LEAVE HOLE UNFILLED.
18. WELD AS SHOWN ON EITHER SIDE OF THE SADDLE, WHICHEVER SIDE IS EASIEST TO ACCESS. BOTH SIDES NOT REQUIRED.
19. (Q) WELD PER INL WELD PROCEDURE SPECIFICATION S2.0 USING ITEM 18.
20. (Q) VISUALLY INSPECT ALL WELDS IN ACCORDANCE WITH TPR-4981 "VISUAL EXAMINATION" APPENDIX K "VISUAL ACCEPTANCE CRITERIA FOR AWS D1.6, FOR STATICALLY LOADED MEMBERS.

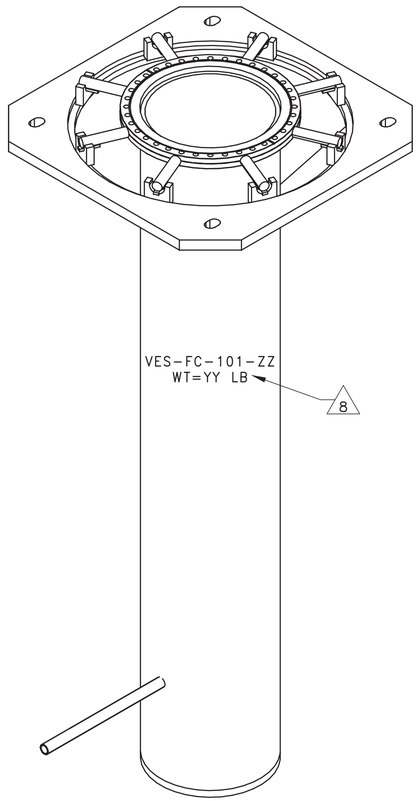

3D VIEW
(SHOWN FOR CLARITY)
SCALE: NONE

-5	-4	-3	-2	-1	QUAL LEVEL	PART OR IDENTIFYING NO.	NOMENCLATURE OR DESCRIPTION	MATERIAL/SPECIFICATION OR VENDOR NAME	ITEM NO.
	2				3	-24	REPAD HALF	PLATE 304H SST ASTM A240	24
				1	3	-23	COLLAR	PIPE, SEAMLESS 304H SST ASTM A312	23
									22
									21
									20
									19
AR	AR	AR		AR	3		WELD FILLER METAL	ER 308H AWS A 5.9	18
									17
									16
		8			3	-15	SHIM	PLATE 304 OR 304L SST ASTM A240	15
8					3	-14	ROD	BAR 304 OR 304H SST ASTM A479	14
1					3	-13	CF FLANGE	MAKE FROM #F1650X000N KURT J LESKER, CO.	13
		8			3	-12	SADDLE	PLATE 304H SST ASTM A240	12
		1			3	-11	PLATE	PLATE 304H SST ASTM A240	11
	1				3	-10	CONDENSOR LINE	PIPE, SEAMLESS 304H SST ASTM A312	10
	1				3	-9	NITROGEN LINE	PIPE, SEAMLESS 304H SST ASTM A312	9
	1				3	-8	BOTTOM PLATE	PLATE 304H SST ASTM A240	8
	1				3	-7	DISTILLATION BODY	PIPE, SEAMLESS 304H SST ASTM A312	7
						-6	REMOVED		6
				1	3	-5	INDEX ASSEMBLY		5
				1	3	-4	VESSEL ASSEMBLY		4
				1	3	-3	SADDLE ASSEMBLY		3
						-2	REMOVED		2
					3	-1	ASSEMBLY		1

QTY REQD — PARTS LIST

Randy Eastman
CWI
2014.03.20 12:53:30 -06'00'

PROFESSIONAL ENGINEER REGISTERED 4307 STATE OF IDAHO RANDY EASTMAN

I CERTIFY THAT THIS DRAWING REFLECTS THE CURRENT CONSTRUCTED CONDITION AS OF 3/18/2014

INSPECTION REQUIREMENTS	
QC REQUIRED	
(Q) DENOTES Q/C INSP. REQD.	

DASH NO.	NEXT ASSY
-1	571692

APPLICATION

DIMENSIONING AND SYMBOLOGY PER ASME Y14.5-2009 AND STD-11 UNLESS OTHERWISE SPECIFIED
SURFACE ROUGHNESS 125/
DIMENSIONS AND TOLERANCES ARE IN INCHES
TOLERANCES: .X = ± .1
DECIMALS: ~~.XX = ± .03~~ ~~.XXX = ± .010~~
FRACTIONS ± 1/8
ANGULAR ± 2°
(11)
DO NOT SCALE DRAWING

SIGNATURES/DATES APPLY TO CURRENT RELEASE ONLY	SIGN AND DATE
DESIGN: R. CAMPBELL	Rodney C. Campbell HukarAscendent 2014.03.20 11:39:38 -06'00'
DRAFTER: C. WRIDE	Caid Wride CWI 2014.03.20 11:24:55 -06'00'
TECHNICAL CHECK: N. SEAVER	Randy Eastman CWI 2014.03.20 16:10:04 -06'00'
ENG GROUP SUPERVISOR: R. EASTMAN, P.E.	Randy Eastman CWI 2014.03.20 12:52:53 -06'00'
DESIGN LEAD/AUTHORITY: D. MORGAN	David Morgan CWI 2014.03.20 11:50:35 -06'00'
DRAFTING CHECK/ EFFECTIVE DATE: S. BERTHELSON	Shawn Berthelson CWI 2014.03.20 16:24:35 -06'00'
PROJECT NUMBER: 31720	
DRF NUMBER: 337562	

Idaho Cleanup Project CH2M•WG IDAHO, LLC

CPP-666

RH-TRU DISTILLATION PROJECT
DISTILLATION VESSEL ASSEMBLY
VES-FC-101

SIZE	INDEX CODE NUMBER AREA	TYPE	CL	ORIG	DWG-	REV
D	200	0666	53	136	571700	2

SCALE: NONE — SHEET 1 OF 6

File: 571700-2.dwg
Path: K:\0-Signoff\Checker Review\Berthelson_Shawn\DRF-341137
Date: 03/20/14 – 11:20 AM | Layout Name: Sheet 1 | ID: WRIDCC

FMT-D2-REV 2014-01-29

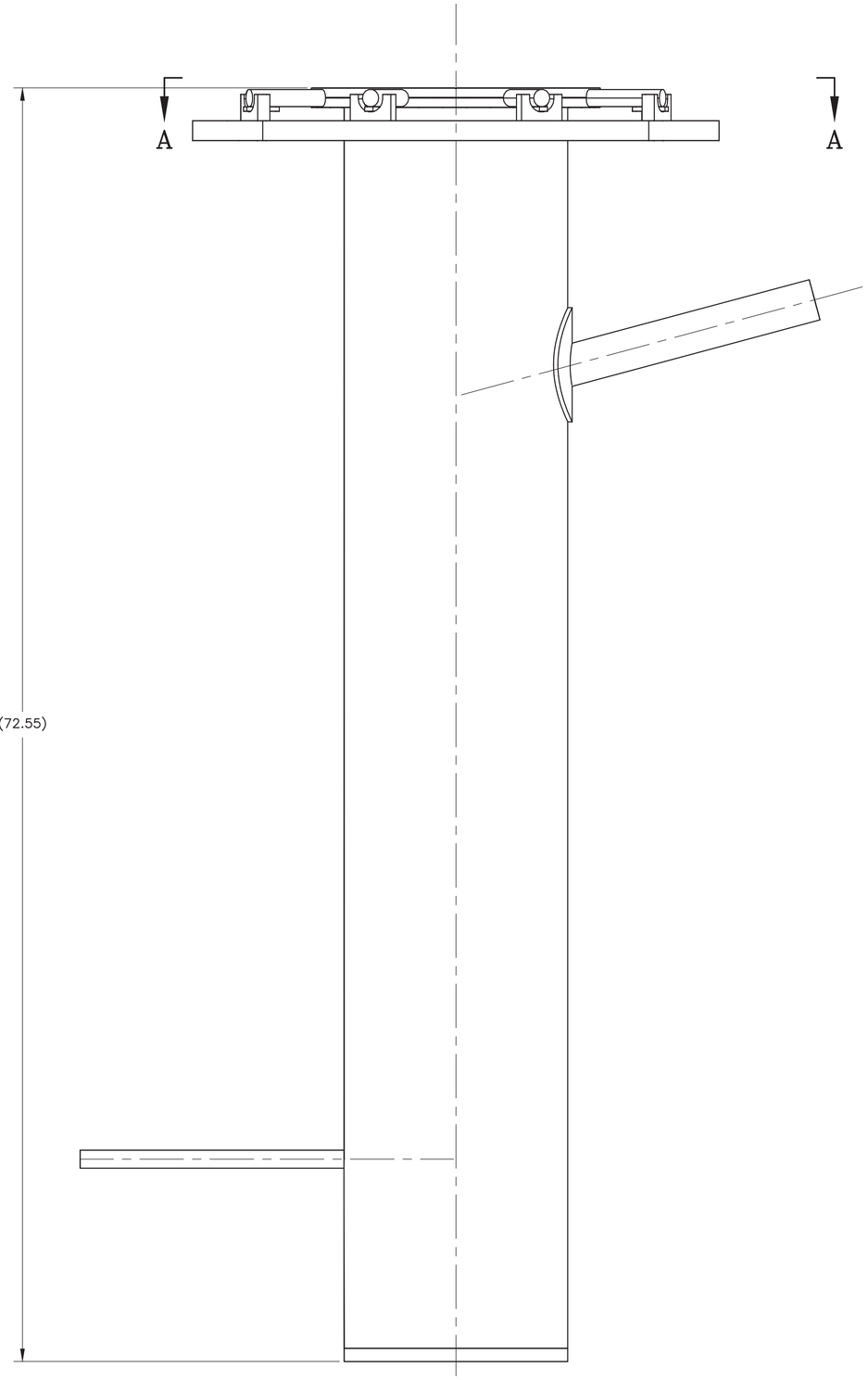

-1 ASSEMBLY
SCALE: 1/4

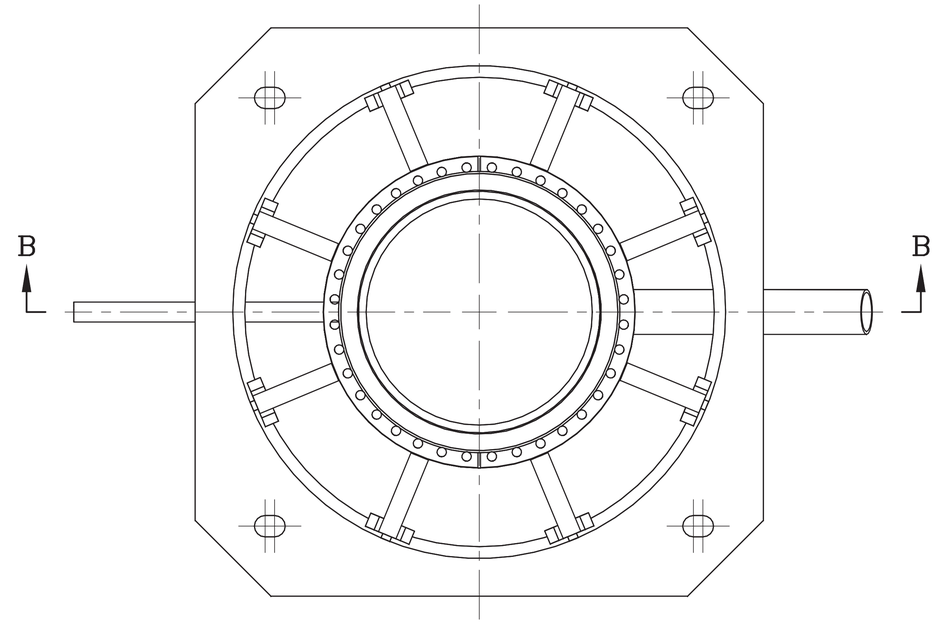

VIEW A-A
SCALE: 1/4

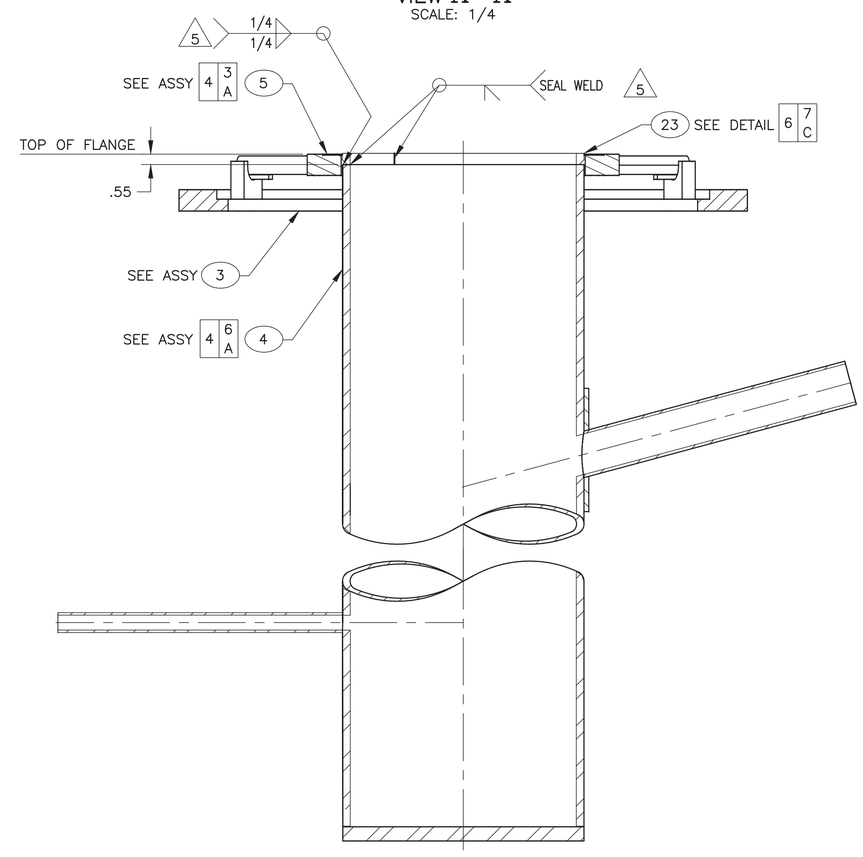

SECTION B-B
SCALE: 1/4

SIZE	INDEX CODE NUMBER					REV
	AREA	TYPE	CL	ORIG	DWG- 571700	2
D	200	0666	53	136		
SCALE: NOTED					SHEET 2	

File: 571700-2.dwg
Path: K:\0-Signoff\Checker Review\Berthelson_Shown\DRF-341137
Date: 03/20/14 - 11:20 AM | Layout Name: Sheet 2
ID: WRIDCC

FMT-D2-REV 2014-01-29

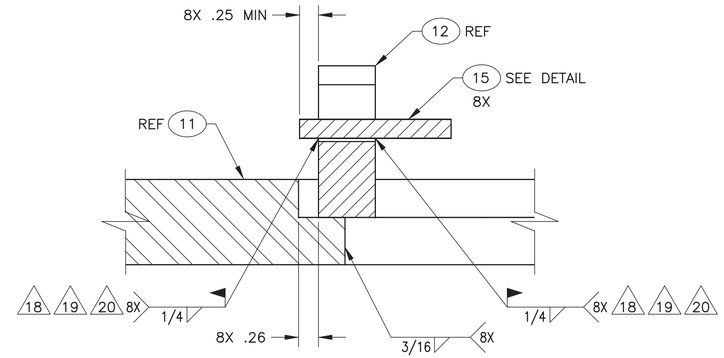

VIEW C–C
SCALE: 1/1

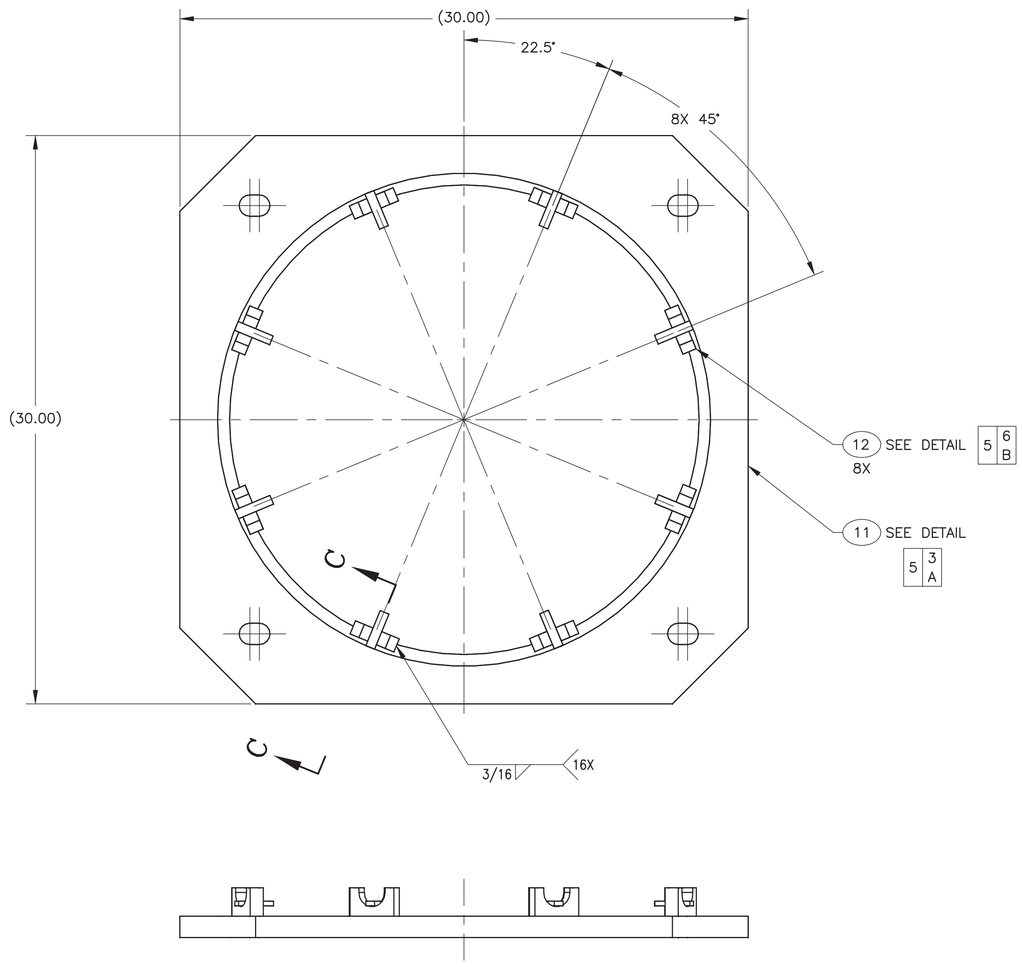

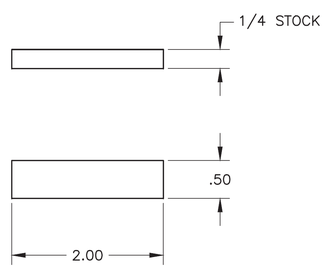

15 DETAIL
SCALE: 1/1

–3 ASSEMBLY
SCALE: 1/4

SIZE	INDEX CODE NUMBER						REV
	AREA	TYPE	CL	ORIG			
D	200	0666	53	136	DWG–	571700	2
SCALE: NOTED						SHEET 3	

File: 571700–2.dwg
Path: K:\0–Signoff\Checker Review\Berthelson_Shawn\DRF–341137
Date: 03/20/14 – 11:20 AM | Layout Name: Sheet 3
ID: WRIDCC

FMT-D2-REV 2014-01-29

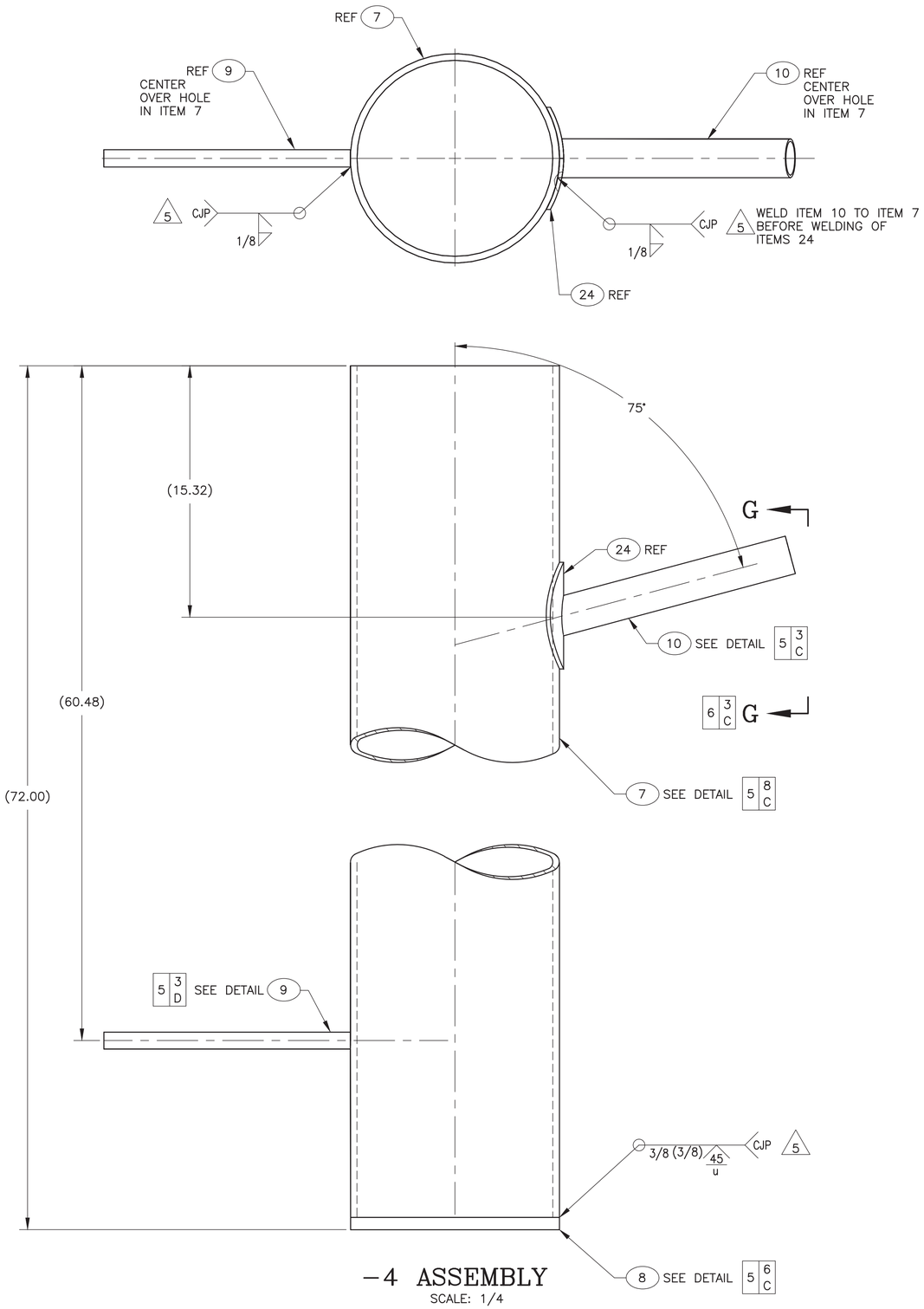

−4 ASSEMBLY

SCALE: 1/4

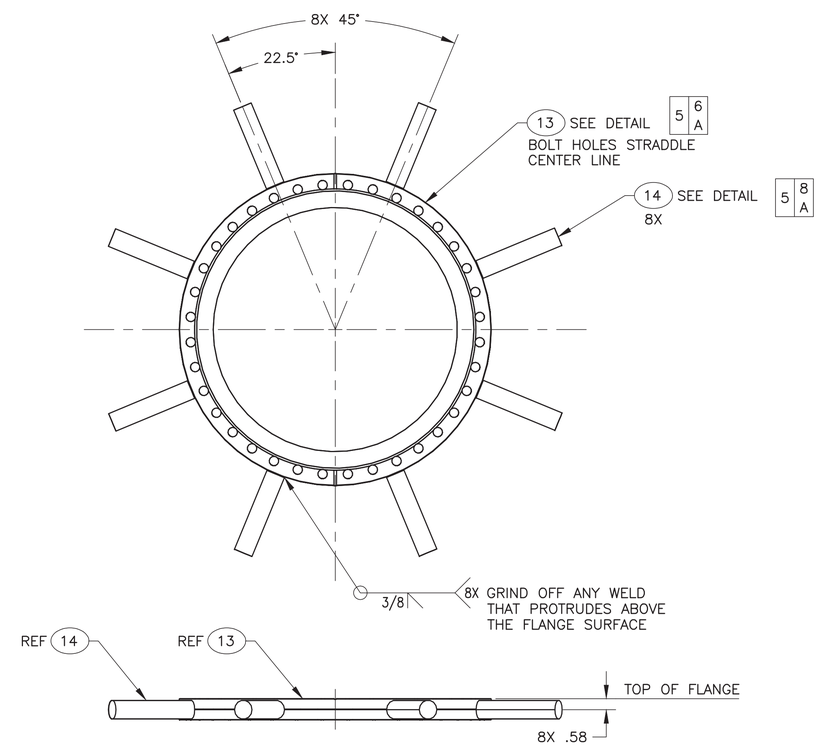

−5 ASSEMBLY

SCALE: 1/4

SIZE	INDEX CODE NUMBER					
	AREA	TYPE	CL	ORIG	DWG−	REV
D	200	0666	53	136	571700	2
SCALE: NOTED					SHEET 4	

File: 571700-2.dwg
Path: K:\0-Signoff\Checker Review\Berthelson_Shawn\DRF-341137
Date: 03/20/14 – 11:20 AM | Layout Name: Sheet 4
ID: WRIDCC

FMT-D2-REV 2014-01-29

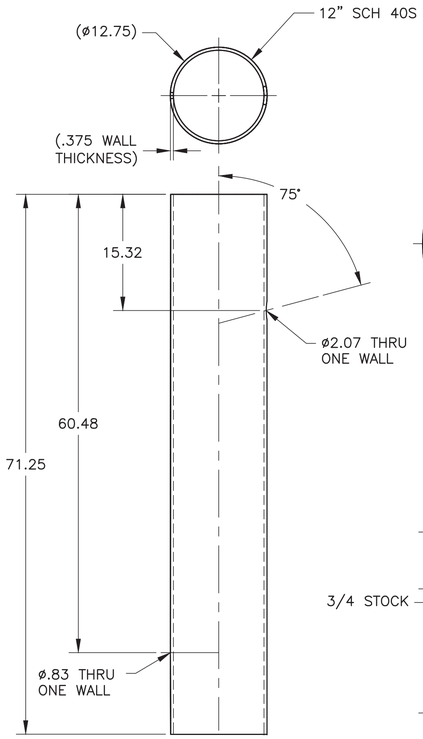

7 DETAIL
SCALE: 1/10

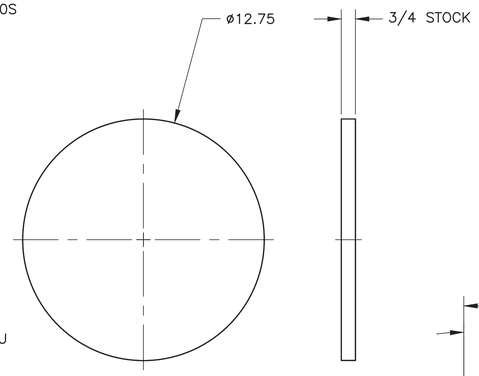

8 DETAIL
SCALE: 1/4

9 DETAIL
SCALE: 1/1

10 DETAIL
SCALE: 1/1

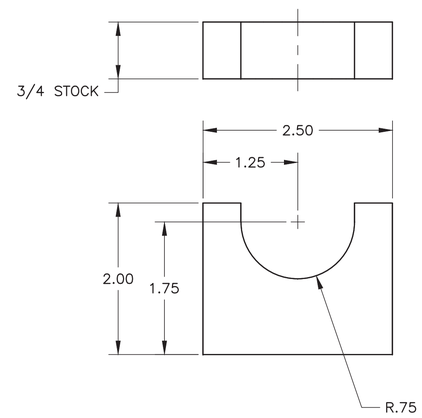

12 DETAIL
SCALE: 1/1

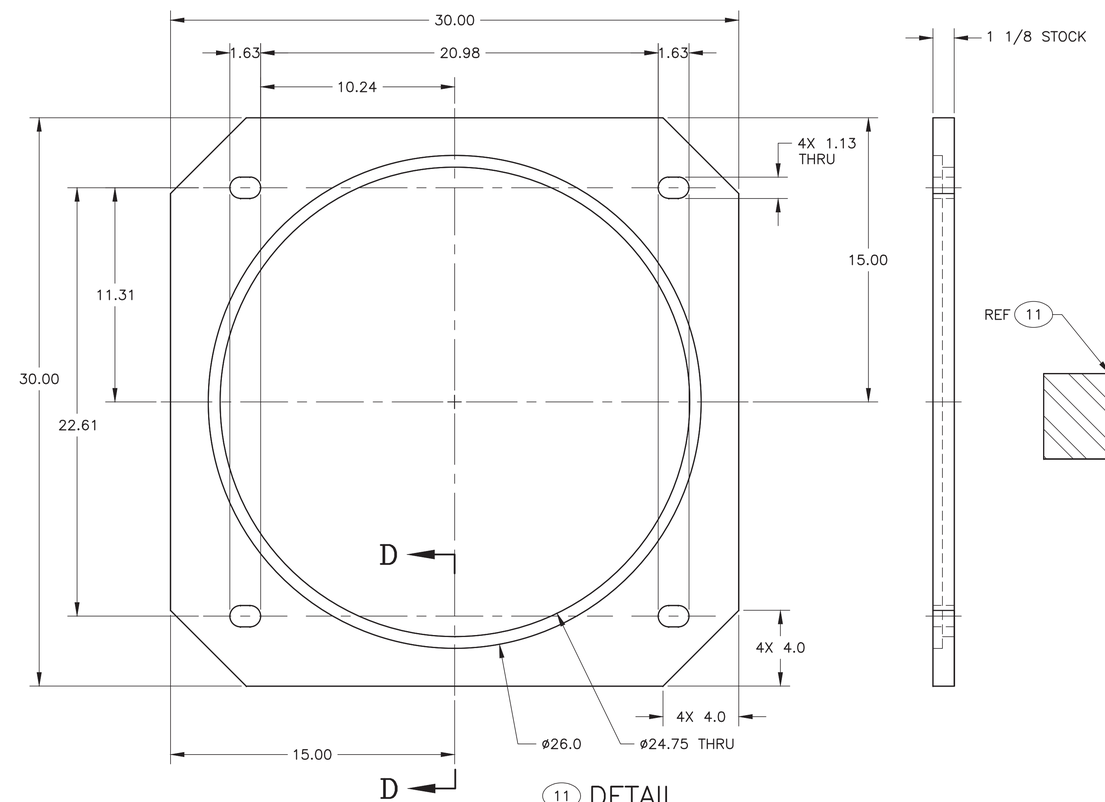

11 DETAIL
SCALE: 1/4

VIEW D–D
ROTATED 90° CW
SCALE: 1/1

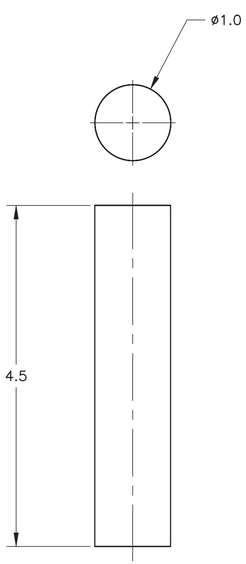

14 DETAIL
SCALE: 1/1

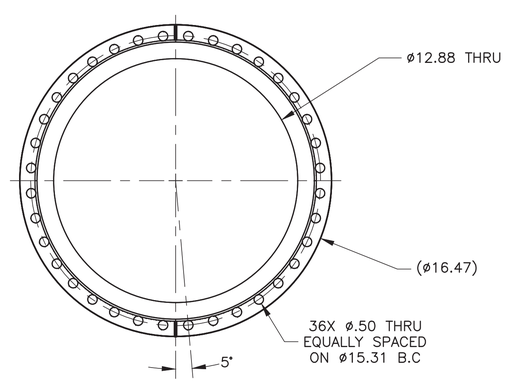

13 DETAIL
SCALE: 1/4

SIZE	INDEX CODE NUMBER					
	AREA	TYPE	CL	ORIG		
D	200	0666	53	136	DWG– 571700	REV 2
SCALE: NOTED					SHEET 5	

File: 571700-2.dwg
Path: K:\0-Signoff\Checker Review\Berthelson_Shawn\DRF-341137
Date: 03/20/14 – 11:20 AM | Layout Name: Sheet 5
ID: WRIDCC

FMT-D2-REV 2014-01-29

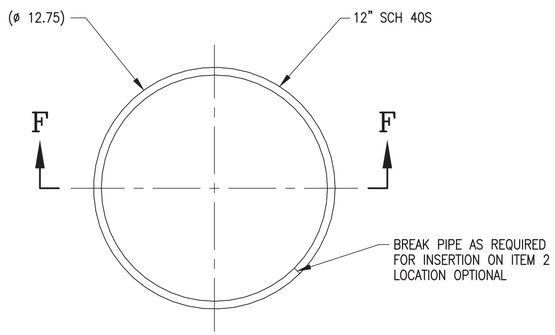

23 DETAIL
SCALE: 1/4

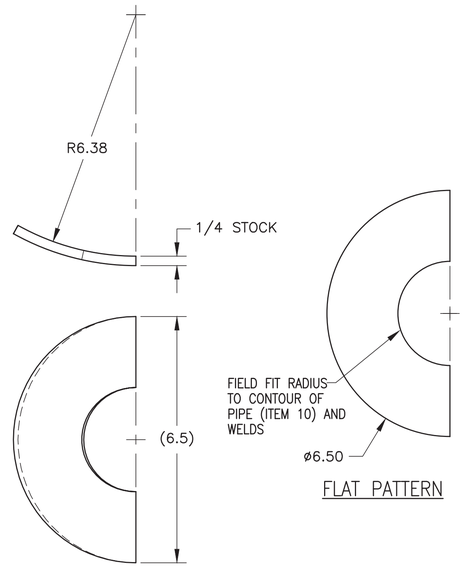

FLAT PATTERN

24 DETAIL 17
SCALE: 1/2

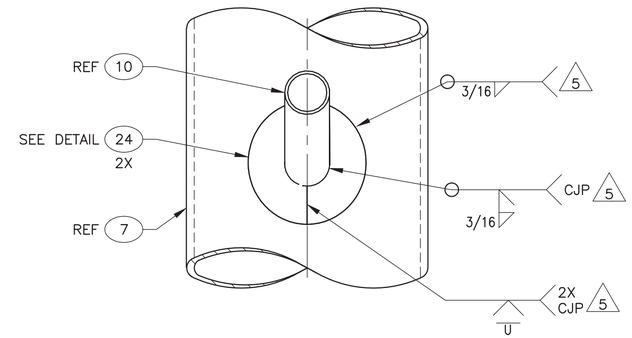

VIEW G—G
SCALE: 1/4

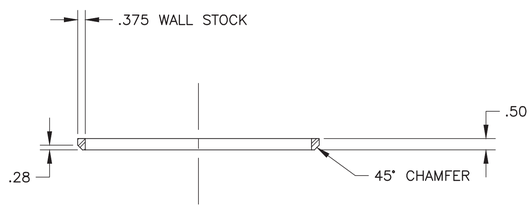

SECTION F—F
SCALE: 1/4

SIZE	INDEX CODE NUMBER						REV
	AREA	TYPE	CL	ORIG	DWG-	571700	2
D	200	0666	53	136			
SCALE: NOTED					SHEET 6		

File: 571700-2.dwg
Path: K:\0-Signoff\Checker Review\Bertnelson_Shawn\DRF-341137
Date: 03/20/14 - 11:20 AM | Layout Name: Sheet 6
ID: WRIDCC

FMT-D1-REV 2014-01-29

REVISIONS	
REV	DESCRIPTION
3	INCORP'D FDCs 9468, 9510, 9535, 9587, & 9605 PREVIOUS HISTORY REMOVED; SEE DRF-341136
4	AS-BUILT AS OF 3/18/2014, SUBMITTAL TO STATE FOR RCRA PERMIT, SEE DRF-341590

NOTES:

1. REMOVE ALL BURRS AND SHARP EDGES.
2. ALL MACHINED FILLET RADII .03 MAXIMUM UNLESS OTHERWISE NOTED.
3. ALL PRESSURE BOUNDARY WELDS SHALL COMPLY WITH BPV CODE SECTION VIII, DIV. 1, ASME SECTION X OR ASME B31.3.
4. ALL STRUCTURAL, NON-PRESSURE BOUNDARY WELDING SHALL BE PERFORMED IN ACCORDANCE WITH AWS D1.6, STRUCTURAL WELDING CODE FOR STAINLESS STEEL.
5. (Q) VISUALLY INSPECT ALL WELDS IN ACCORDANCE WITH ASME BPV CODE SECTION V, ARTICLE 9.
6. (Q) LIQUID PENETRANT EXAMINATION SHALL BE PERFORMED IN ACCORDANCE WITH THE BPV CODE SECTION V, ARTICLE 6. ACCEPTANCE CRITERIA SHALL BE:
   a. ALL SURFACES TO BE EXAMINED SHALL BE FREE OF:
      (1) RELEVANT LINEAR INDICATIONS
      (2) RELEVANT ROUNDED INDICATIONS GREATER THAN 5MM (3/16")
      (3) FOUR OR MORE RELEVANT ROUNDED INDICATIONS IN A LINE SEPARATED BE 1.5MM (1/16") OR LESS, EDGE-TO-EDGE.
   b. CRACK LIKE INDICATIONS DETECTED, IRRESPECTIVE OF SURFACE CONDITIONS, ARE UNACCEPTABLE.
7. (Q) FINAL ASSEMBLY SHALL BE FREE OF DIRT, CHIPS, WELDING FLUX, SLAG, SCALE, OIL, GREASE, ETC. PERFORM A VISUAL INSPECTION OF THE FINAL ASSEMBLY PER ASTM A380, PARA 7.2.1.
8. (Q) MARK PER STD-7006-2A OR STD-7006-2D IN 1/2" HIGH CHARACTERS WITH INFORMATION AS SHOWN WHERE "ZZ" IS A UNIQUE NUMBER ASSIGNED FOR EACH ASSEMBLY BUILT AND "YY" IS THE MEASURED WEIGHT OF THE -1 ASSEMBLY. LOCATE APPROXIMATELY WHERE SHOWN. FILL CHARACTERS WITH SANFORD T.E.C. MARKER #13401 OR #13501, ITW DYMON FORMULA Q404 INK OR OTHER HIGH-PURITY LOW-CHLORIDE BLACK INK THAT COMPLIES WITH ASTM C1217-00 OR RDT F7-3T. DO NOT APPLY VARNISH OVER MARKING.
9. (Q) VERIFY MARKINGS HAVE BEEN ACCURATELY APPLIED AND RECORD THE UNIQUE NUMBER AND MEASURED WEIGHT.
10. COMPLETED ASSEMBLY SHALL UNDERGO A PNEUMATIC LEAK TEST IN ACCORDANCE WITH ASME B31.3 AT A PRESSURE OF 16.5 TO 18.5 PSIG. "SNOOP" ALL CONNECTIONS FOR LEAKS. PRESSURE DROP SHALL NOT EXCEED 0.1 PSIG OVER A 10 MINUTE PERIOD.
11. DESIGN PRESSURE: FULL VACUUM TO 15 PSIG.
12. DESIGN TEMPERATURE = 1000° F
13. TOLERANCES ON DECIMALS
    .XX = ± .06
    .XXX = ± .005
14. BOLT TORQUES:
    TORQUE 1/2-13 UNC BOLTS, ITEM 26, TO 32(+3/-0)FT-LB.
    TORQUE M8 BOLTS, SUPPLIED WITH ITEM 23, TO 15(+2/-0)FT LB.
15. APPLY THREAD LUBRICANT, ITEM 31, TO ALL SCREWS AND BOLTS.
16. TRIM PIPES, ITEMS 4 AND 28, TO MATCH EXTERIOR SURFACE OF ITEMS 6 AND 7 AS NEEDED. CUT HOLES IN ITEMS 6 AND 7 TO MATCH ID OF ITEMS 4 AND 28 AS NEEDED.

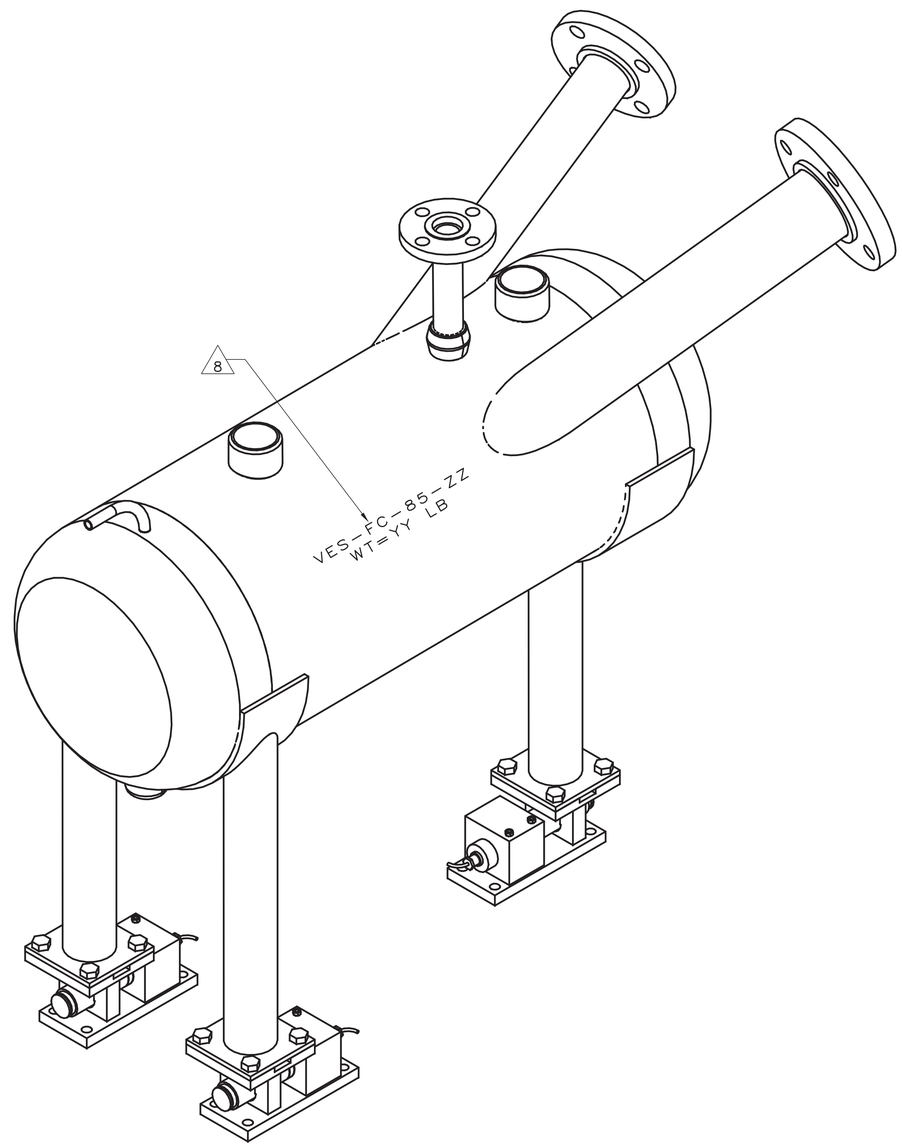

3D VIEW
(SHOWN FOR CLARITY)
SCALE: NONE

-3	-2	-1	QUAL LEVEL	PART OR IDENTIFYING NO.	NOMENCLATURE OR DESCRIPTION	MATERIAL/SPECIFICATION OR VENDOR NAME	ITEM NO.
		AR	3	77124	LOCTITE NICKEL ANTI-SEIZE THREAD LUBRICANT	LOCTITE	31
							30
		1	3		RF FLANGE, 2, SLIP ON, CLASS 150	F304H SST ASTM A182	29
		1	3	-28	LIGHT PORT	PIPE, SEAMLESS TP304H SST ASTM A312	28
		12	3		WASHER, FLAT, 1/2	18-8 SST, ASME B18.22.1	27
		12	3		CAP SCREW, HEX HEAD 1/2-13 UNC X 3/4 LONG	18-8 SST, ASTM F593	26
		3	3	496471	DUMMY LOAD CELL	VISHAY PRECISION GROUP	25
		3	3	471268	THERMAL INSULATION KIT	VISHAY PRECISION GROUP	24
		3	3	473855	PRECISION LOAD CELL AND MOUNT	VISHAY PRECISION GROUP	23
		1	3		END CAP, 1 1/2 SCH 40S, BW	F304H SST, MSS-SP-43, ASTM A403	22
		2	3		WELDOLET, 2 CLASS 3000 FITTING	F304H SST, MSS-SP-97, ASTM A182	21
		1	3		SOCKOLET, 1 CLASS 3000 FITTING	F304H SST, MSS-SP-97, ASTM A182	20
		1	3		SOCKOLET, 3/4 CLASS 3000 FITTING	F304H SST, MSS-SP-97, ASTM A182	19
		1	3		RF FLANGE, 1, SLIP ON, CLASS 150	F304H SST ASTM A182	18
		1	3	-17	SCALE	SHEET 304/304L SST ASTM A240	17
		1	3	-16	1/2" OD TUBING, TYPE 316/316L SS .065" WALL THICKNESS	SWAGELOK MADE FROM SS-T8-S-065-20	16
		3	3	-15	LOAD CELL PLATE	PLATE CS ASTM A36	15
		1	3	-14	LEVEL SWITCH PIPE	PIPE, SEAMLESS TP304H SST ASTM A312	14
1	1		3	-13	BASE PLATE	PLATE 304H SST ASTM A240	13
1			3	-12	SUPPORT TUBE	PIPE 304H SST ASTM A312	12
	1		3	-11	SUPPORT TUBE	PIPE 304H SST ASTM A312	11
1			3	-10	SADDLE	PLATE 304H SST ASTM A240	10
	1		3	-9	HALF SADDLE	PLATE 304H SST ASTM A240	9
		1	3	-8	END CAP, 12, BW, SCH 40S	304H SST, MSS-SP-43, ASTM A403	8
		1	3		END CAP, 12, BW, SCH 40S	304H SST, MSS-SP-43, ASTM A403	7
		1	3	-6	VESSEL BODY	PIPE, SEAMLESS TP304H SST ASTM A312	6
		1	3		RF FLANGE, 3, SLIP ON, CLASS 150	F304H SST ASTM A182	5
		1	3	-4	CAMERA PORT	PIPE, SEAMLESS TP304H SST ASTM A312	4
		1	3	-3	SADDLE ASSEMBLY		3
		2	3	-2	HALF SADDLE ASSEMBLY		2
			3	-1	ASSEMBLY		1

QTY REQD

PARTS LIST

Randy Eastman
CWI
2014.03.20 08:05:37 -06'00'

PROFESSIONAL ENGINEER REGISTERED 4307 STATE OF IDAHO RANDY EASTMAN

I CERTIFY THAT THIS DRAWING REFLECTS THE CURRENT CONSTRUCTED CONDITION AS OF 3/18/2014

INSPECTION REQUIREMENTS	DASH NO.	NEXT ASSY
QC REQUIRED	-1	571692
(Q) DENOTES Q/C INSP. REQD.	APPLICATION	

DIMENSIONING AND SYMBOLOGY PER ASME Y14.5-2009 AND STD-11 UNLESS OTHERWISE SPECIFIED
SURFACE ROUGHNESS 125√
DIMENSIONS AND TOLERANCES ARE IN INCHES
TOLERANCES: .X = ± .1
DECIMALS: ~~.XX = ± .03~~ ~~.XXX = ± .010~~
FRACTIONS ± 1/8
ANGULAR (13) ± 2°
DO NOT SCALE DRAWING

SIGNATURES/DATES APPLY TO CURRENT RELEASE ONLY	SIGN AND DATE
DESIGN: NA	– –
DRAFTER: J. MONCUR	Jim Moncur CWI 2014.03.19 13:44:17 -06'00'
TECHNICAL CHECK: NA	– –
ENG GROUP SUPERVISOR: NA	– –
DESIGN LEAD/AUTHORITY: D. MORGAN	David Morgan CWI 2014.03.20 08:36:30 -06'00'
DRAFTING CHECK/ EFFECTIVE DATE: K. KELLER	Kris Keller CWI 2014.03.20 09:50:49 -06'00'
PROJECT NUMBER: 31720	
DRF NUMBER: 337562	

Idaho Cleanup Project CH2M•WG IDAHO, LLC

CPP-666

RH-TRU DISTILLATION SYSTEM
COLLECTION VESSEL ASSEMBLY
VES-FC-85

SIZE	INDEX CODE NUMBER AREA	TYPE	CL	ORIG	DWG-	REV
D	200	0666	53	136	571699	4

SCALE: NOTED SHEET 1 OF 4

File: 571699-4.dwg
Path: K:\RH-TRU Distillation\Drawings\DRF-341590
Date: 03/19/14 – 12:46 PM Layout Name: SHEET 1 ID: MXJ

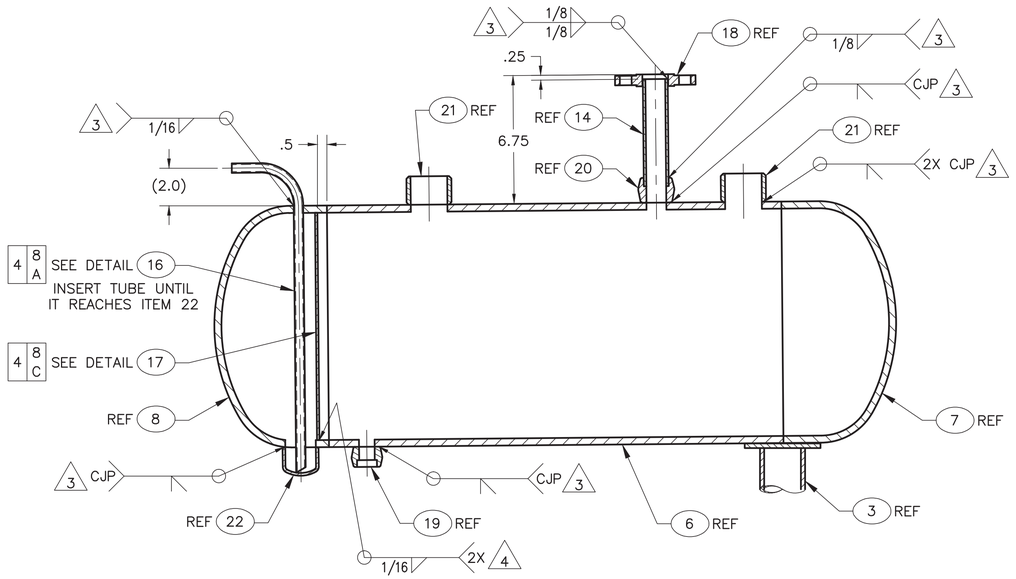

SECTION A–A
(SOME ITEMS REMOVED FOR CLARITY)
SCALE: 1/4

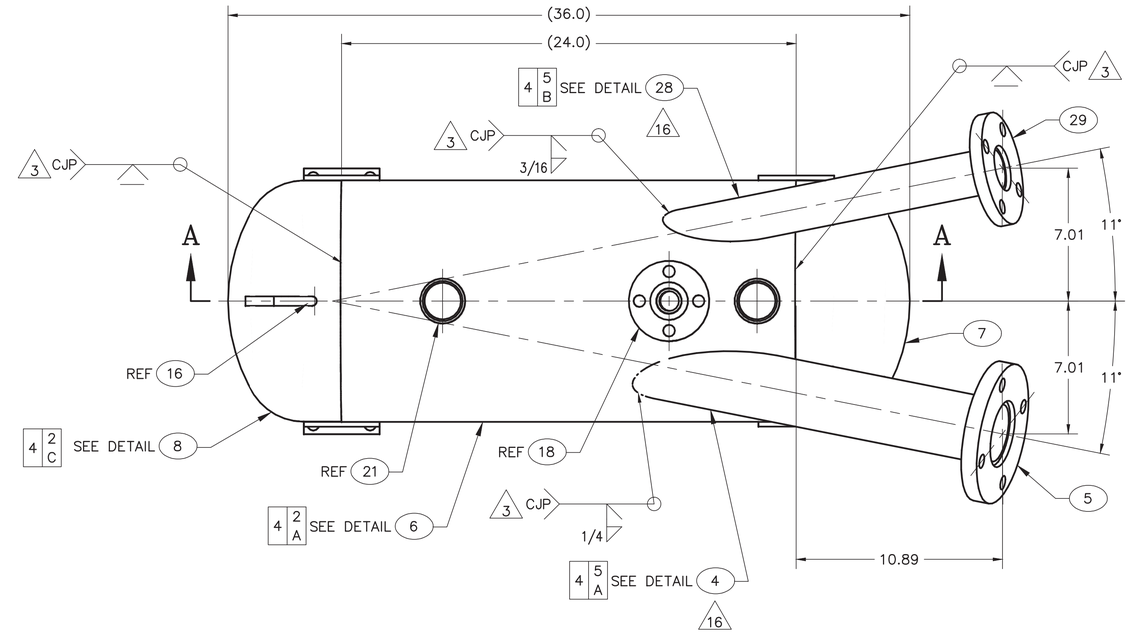

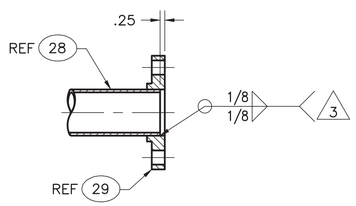

SECTION B–B
SCALE: 1/4

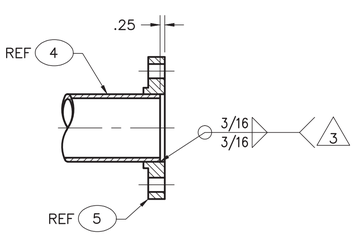

SECTION C–C
SCALE: 1/4

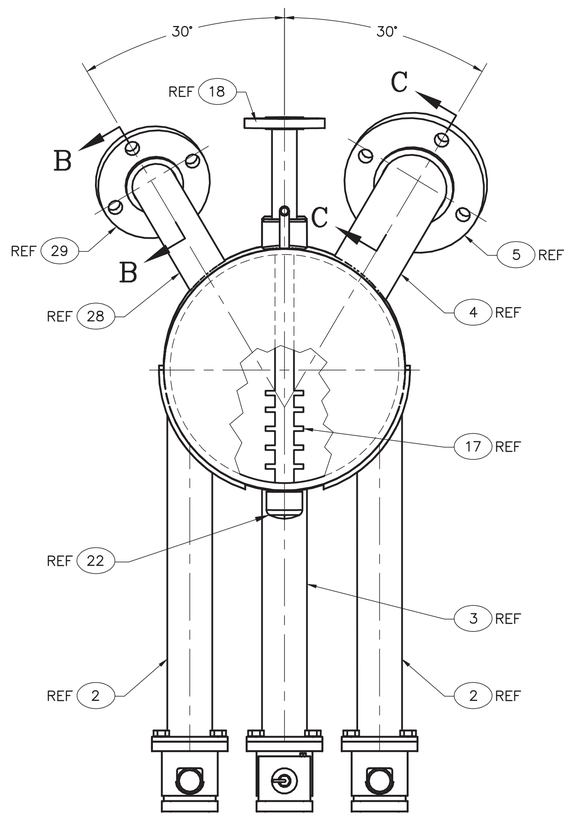

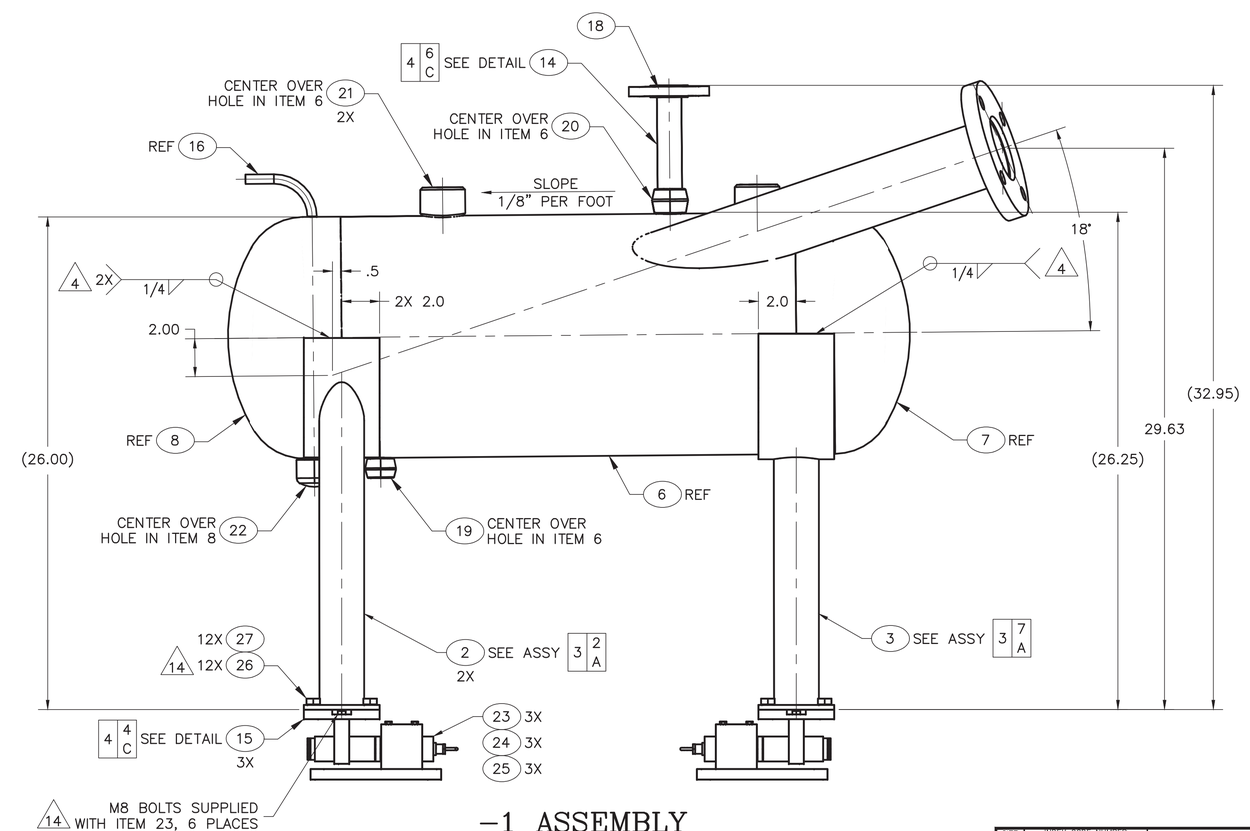

–1 ASSEMBLY
SCALE: 1/4

SIZE	INDEX CODE NUMBER						REV
	AREA	TYPE	CL	ORIG	DWG–	571699	4
D	200	0666	53	136			
SCALE: NOTED					SHEET	2	

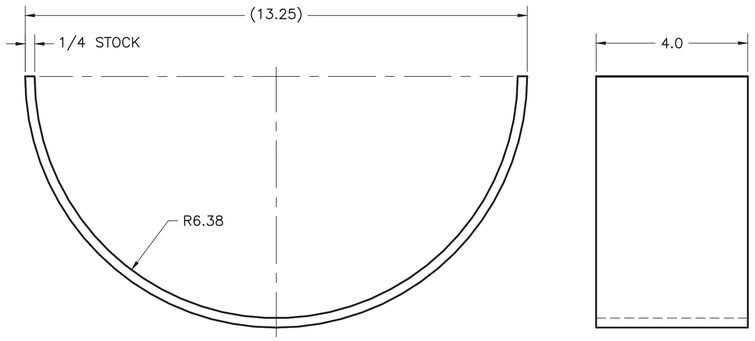

10 DETAIL
SCALE: 1/2

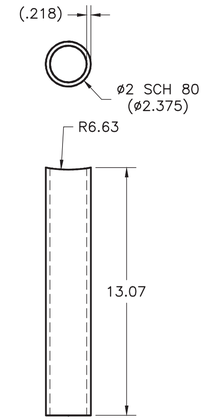

12 DETAIL
SCALE: 1/4

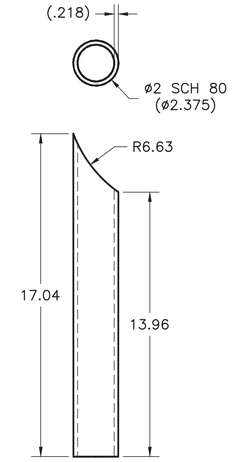

11 DETAIL
SCALE: 1/4

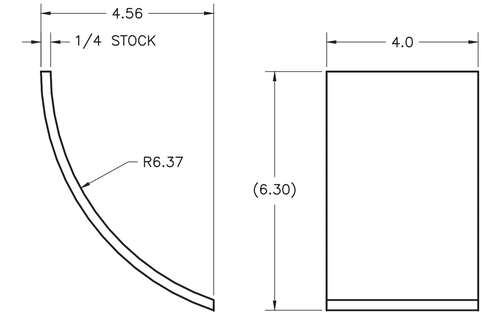

9 DETAIL
SCALE: 1/4

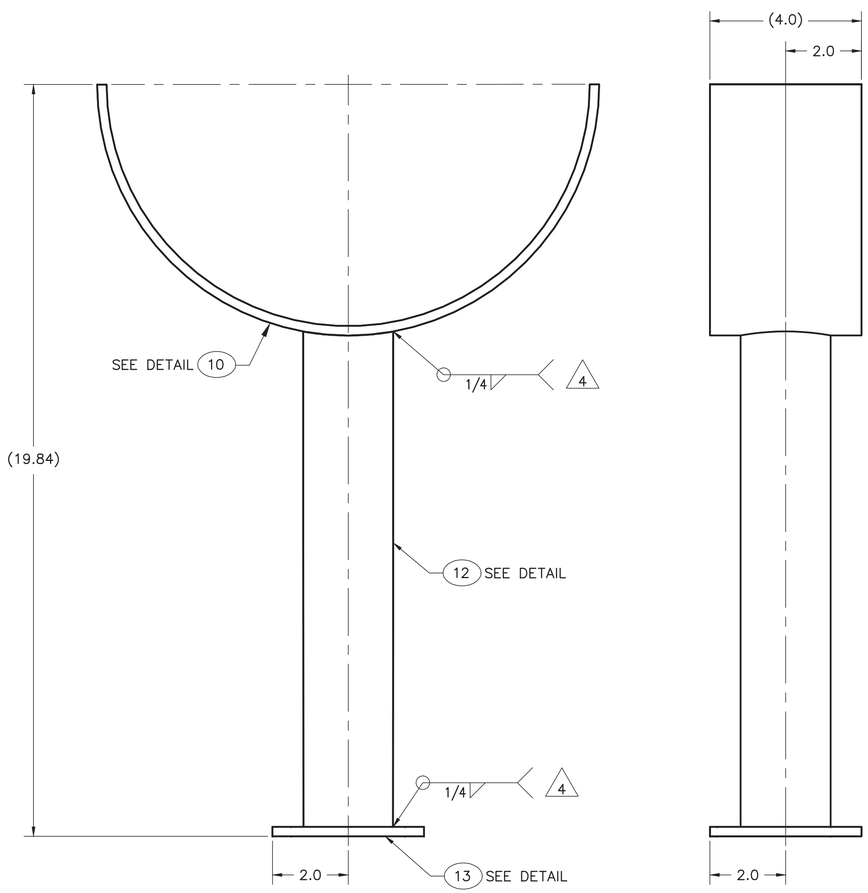

-3 ASSEMBLY
SCALE: 1/2

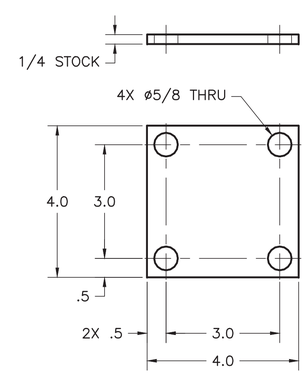

13 DETAIL
SCALE: 1/2

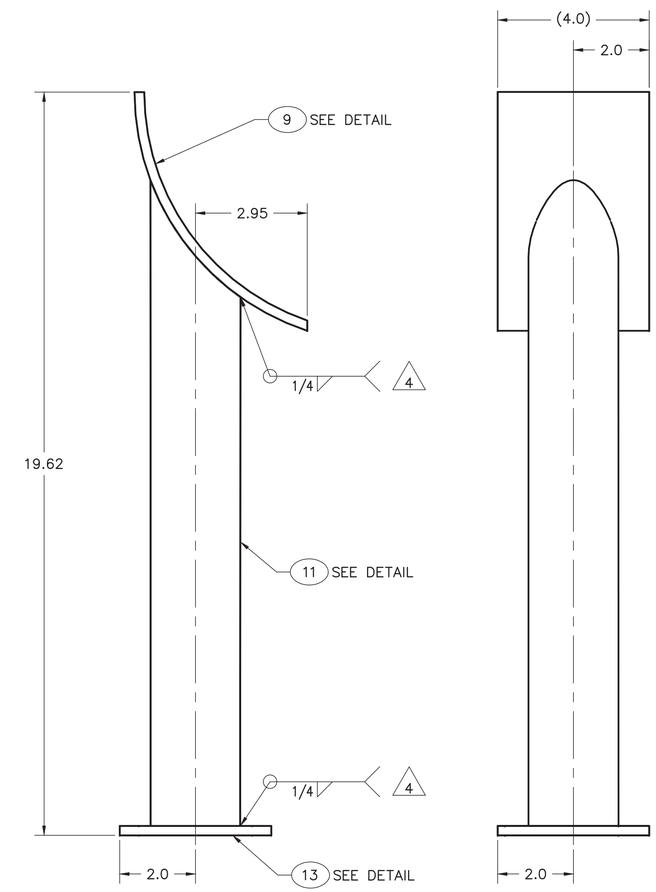

-2 ASSEMBLY
SCALE: 1/2

SIZE	INDEX CODE NUMBER						REV
	AREA	TYPE	CL	ORIG			
D	200	0666	53	136	DWG-	571699	4
SCALE: NOTED						SHEET 3	

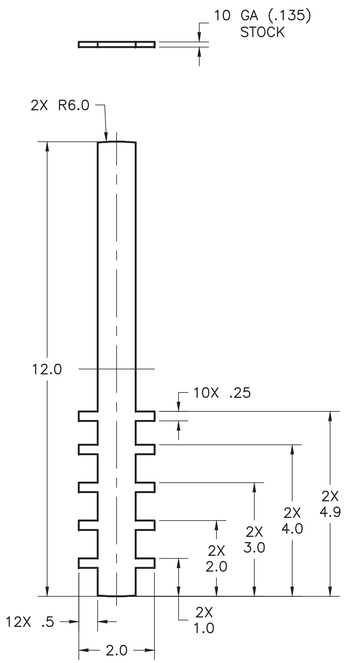

17 DETAIL
SCALE: 1/2

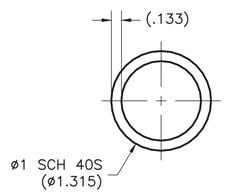

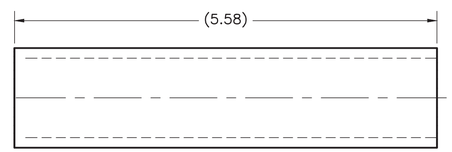

14 DETAIL
SCALE: 1/1

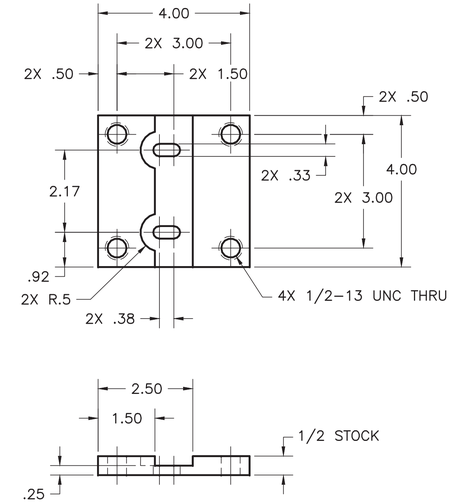

15 DETAIL
SCALE: 1/2

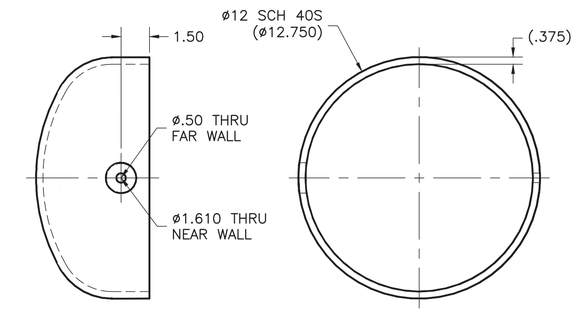

8 DETAIL
SCALE: 1/4

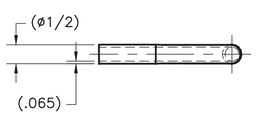

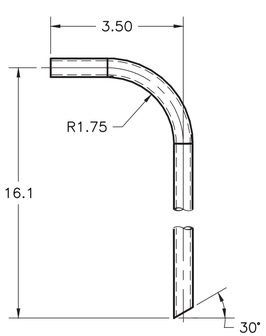

16 DETAIL
SCALE: 1/2

28 DETAIL
SCALE: 1/2

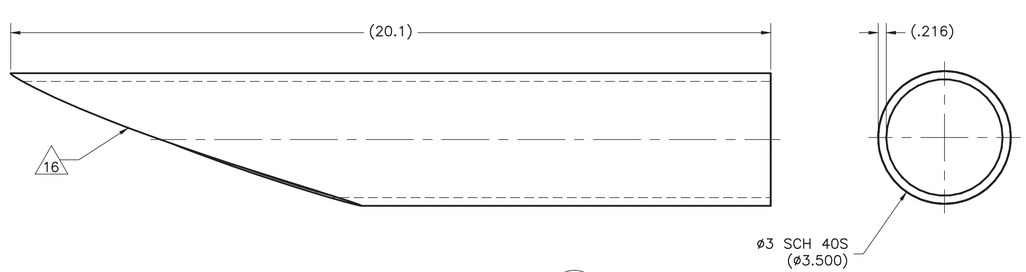

4 DETAIL
SCALE: 1/2

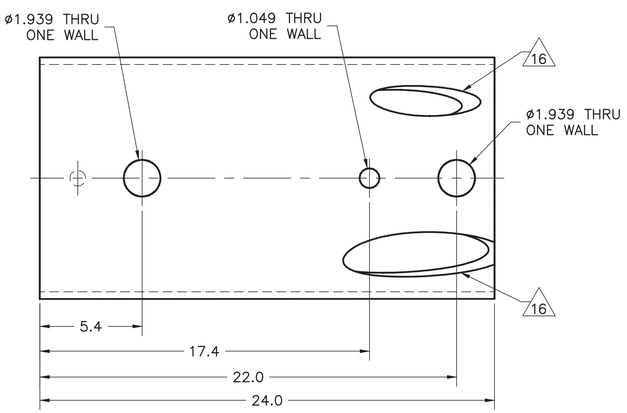

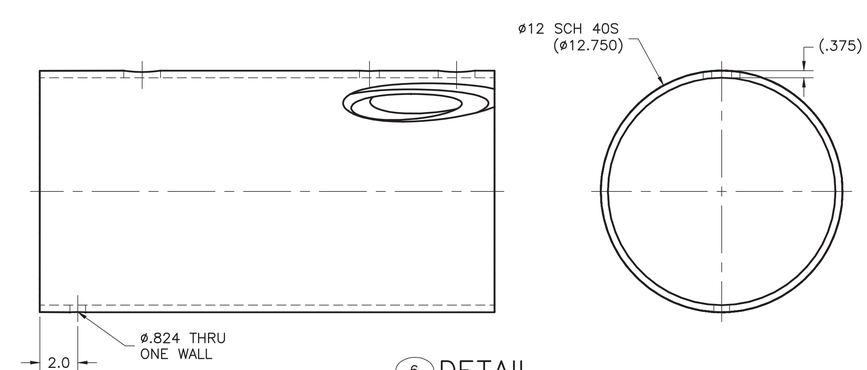

6 DETAIL
SCALE: 1/4

SIZE	INDEX CODE NUMBER				DWG-	571699	REV
	AREA	TYPE	CL	ORIG			
D	200	0666	53	136			4
SCALE: NOTED						SHEET 4	

FMT-D1-REV 2014-01-29

REVISIONS	
REV	DESCRIPTION
1	INCORPORATED FDC'S 8886, 8961, 9129 & 9415. SEE DRF-341131.
2	AS-BUILT AS OF 3/18/2014, SUBMITTAL TO THE STATE FOR RCRA PERMIT, SEE DRF-341590

NOTES:

1. REMOVE ALL BURRS AND SHARP EDGES.
2. ALL MACHINED FILLET RADII .03 MAXIMUM UNLESS OTHERWISE NOTED.
3. USE THREAD LUBRICANT (ITEM 12) ON ALL BOLT THREADS.
4. (Q) FINAL ASSEMBLY SHALL BE FREE OF DIRT, CHIPS, WELDING FLUX, SLAG, SCALE, OIL, GREASE, ETC. PERFORM A VISUAL INSPECTION OF THE FINAL ASSEMBLY PER ASTM A380, PARA 7.2.1.
5. (Q) TORQUE BOLTS ON 4.5" O.D. CF FLANGES TO 15 (+2/-0) FT LB USING A STAR PATTERN.
6. (Q) COMPLETED ASSEMBLY SHALL UNDERGO A PNEUMATIC LEAK TEST IN ACCORDANCE WITH ASME B31.3 AT A PRESSURE OF 16.5 TO 18.5 PSIG. "SNOOP" ALL CONNECTIONS FOR LEAKS. PRESSURE DROP SHALL NOT EXCEED 0.1 PSIG OVER A 10 MINUTE PERIOD.
7. WELDING SHALL BE PERFORMED IN ACCORDANCE WITH ASME B31.3 USING ITEM 11.
8. VISUALLY INSPECT ALL WELDS IN ACCORDANCE WITH ASME B31.3, PARA. 344.4.1 (A) FOR NORMAL FLUID SERVICE. ACCEPTANCE CRITERIA SHALL BE PER ASME B31.3, PARA. 341.3.2
9. PERFORM IN-PROCESS INSPECTION OF WELDS WHERE SPECIFIED PER ASME B31.3, PARA. 344.7 USING LIQUID PENETRANT EXAMINATION OF THE ROOT AND FINAL PASS.
10. LIQUID PENETRANT EXAMINATION SHALL BE PERFORMED IN ACCORDANCE WITH THE BPV CODE SECTION V, ARTICLE 6. ACCEPTANCE CRITERIA SHALL BE:
    A. ALL SURFACES TO BE EXAMINED SHALL BE FREE OF:
        (1) RELEVANT LINEAR INDICATIONS
        (2) RELEVANT ROUNDED INDICATIONS GREATER THAN 5 MM (.188")
        (3) FOUR OR MORE RELEVANT ROUNDED INDICATIONS IN A LINE
    B. SEPARATED BE 1.5 MM (.063") OR LESS, EDGE-TO-EDGE.
    CRACK LIKE INDICATIONS DETECTED, IRRESPECTIVE OF SURFACE CONDITIONS, ARE UNACCEPTABLE.
11. TOLERANCES ON DECIMALS
    .XX = ± .06
    .XXX = ± .005
12. DESIGN TEMPERATURE = 200° F.
13. DESIGN PRESSURE = FULL VACUUM TO 15 PSIG.

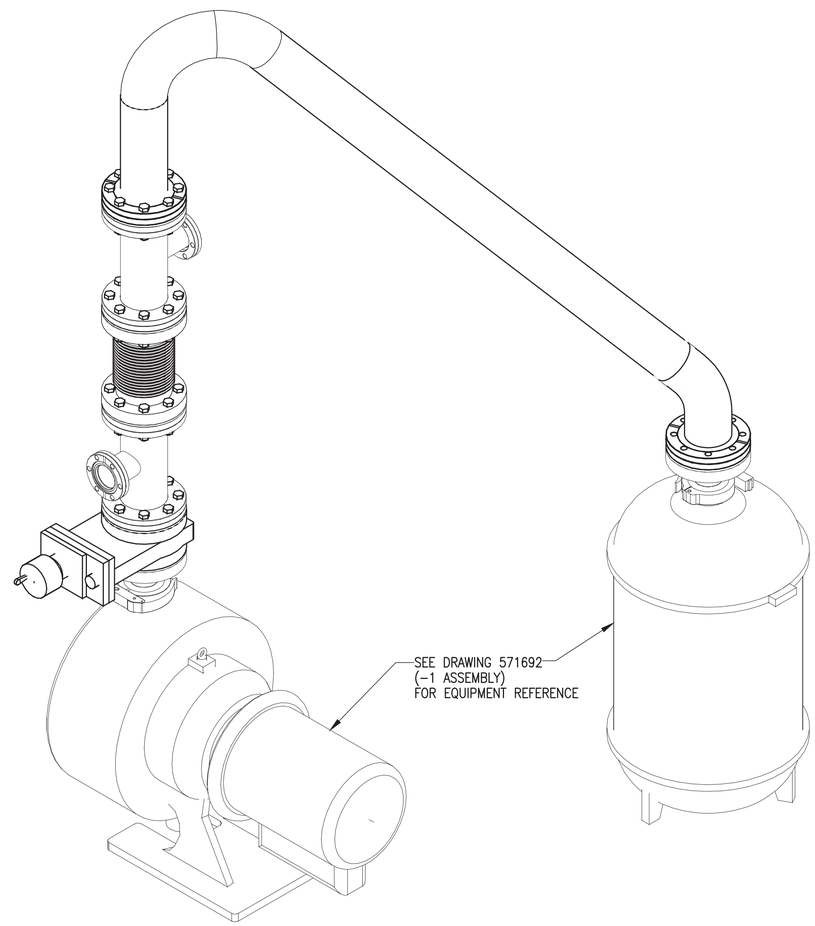

3D VIEW
(SHOWN FOR CLARITY)
SCALE: NONE

	QTY REQD	-0 QUAL LEVEL	PART OR IDENTIFYING NO.	NOMENCLATURE OR DESCRIPTION	MATERIAL/SPECIFICATION OR VENDOR NAME	ITEM NO.
	8	3		M8 WASHER, HIGH STRENGTH	316 SS DIN EN ISO 7089	14
	8	3		M8 X 35MM SCREW CLASS A4-80	316 SS DIN EN ISO 4017	13
	AR	3	77124	NICKEL ANTI-SEIZE THREAD LUBRICANT	LOCTITE CORP.	12
	AR	3		WELD FILLER METAL	ER 308H AWSA5.9	11
	2	3	F0450X250R	4.5" CF FLANGE, TYPE 304H SS ROTATABLE, 2.5" TUBE	KURT J. LESKER CO.	10
	1	3	100885030	BELLOWS SECTION,4.5" CF FLANGE TYPE 321 STAINLESS STEEL	MKS INSTRUMENTS, INC	9
	1	3	GVC 025 B65253000	PNEUMATIC GATE VALVE FOR VACUUM SERVICE WITH CF FLANGES, 4.5" OD	EDWARDS VACUUM	8
	1	3	G-2WC-250	ELBOW, 90°, NO TANGENT 2.5" OD X .065" WALL THICKNESS	KURT J. LESKER CO.	7
	1	3	G-2KL-250	ELBOW, 45°, WITH TANGENT 2.5" OD X .065" WALL THICKNESS	KURT J. LESKER CO.	6
	1	3	G-2WK-250	ELBOW, 45°, NO TANGENT 2.5" OD X .065" WALL THICKNESS	KURT J. LESKER CO.	5
	AR	3	SST-0250I	TUBING, STAINLESS STEEL 2.5" OD X .065" WALL THICKNESS	KURT J. LESKER CO.	4
	2	3	T-0450-275	CF FLANGED REDUCING TEE 4.5" FLANGE X 2.75" FLANGE	KURT J. LESKER CO.	3
	3	3	HBS31224200	BOLT & NUT SET 5/16-24 X 2" LONG	KURT J. LESKER CO.	2
	4	3	GA-0450NSP	GASKET FOR 4.5" CF FLANGE SILVER PLATED COPPER	KURT J. LESKER CO.	1
		3	-0	ASSEMBLY		0

PARTS LIST

Randy E... CWI
2014.03.18 08:02:00'

PROFESSIONAL ENGINEER 4307 STATE OF IDAHO RANDY EASTMAN

I CERTIFY THAT THIS DRAWING REFLECTS THE CURRENT CONSTRUCTED CONDITION AS OF 3/18/2014

INSPECTION REQUIREMENTS	-0	571692
QC REQUIRED	DASH NO.	NEXT ASSY
(Q) DENOTES Q/C INSP. REQD.	APPLICATION	

DIMENSIONING AND SYMBOLOGY PER ASME Y14.5-2009 AND STD-11
UNLESS OTHERWISE SPECIFIED
SURFACE ROUGHNESS 125
DIMENSIONS AND TOLERANCES ARE IN INCHES
TOLERANCES: DECIMALS: .X = ± .1 ~~.XX = ± .03~~ ~~.XXX = ± .010~~
FRACTIONS ± 1/8
ANGULAR (11) ± 2°
DO NOT SCALE DRAWING

SIGNATURES/DATES APPLY TO CURRENT RELEASE ONLY	SIGN AND DATE
DESIGN: NA	– –
DRAFTER: J. MONCUR	Jim Moncur CWI 2014.03.19 13:31:04 -06'00'
TECHNICAL CHECK: NA	– –
ENG GROUP SUPERVISOR: NA	– –
DESIGN LEAD/AUTHORITY: D. MORGAN	David Morgan CWI 2014.03.20 08:37:46 -06'00'
DRAFTING CHECK/ EFFECTIVE DATE: K. KELLER	Kris Keller CWI 2014.03.20 09:51:34 -06'00'
PROJECT NUMBER: 30062	
DRF NUMBER: 337562	

Idaho Cleanup Project CH2M•WG IDAHO, LLC

CPP-666

RH-TRU DISTILLATION SYSTEM

SPOOL PIECE 1

SIZE	INDEX CODE NUMBER AREA	TYPE	CL	ORIG	DWG-	REV
D	200	0666	53	136	571693	2

SCALE: NONE SHEET 1 OF 2

File: 571693-2.dwg
Path: K:\RH-TRU Distillation\Drawings\DRF-341590
Date: 03/19/14 – 11:42 AM Layout Name: 57169301
ID: MKJ

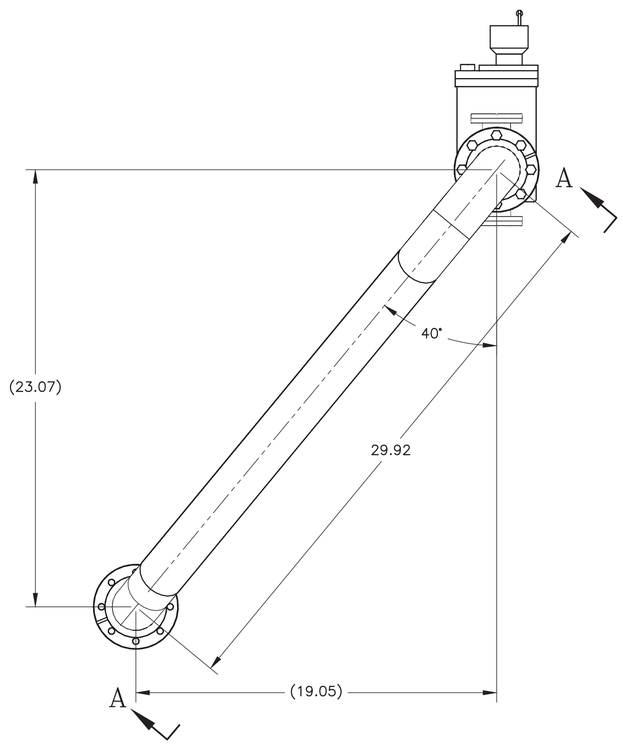

−0 ASSEMBLY
SCALE: 1/4

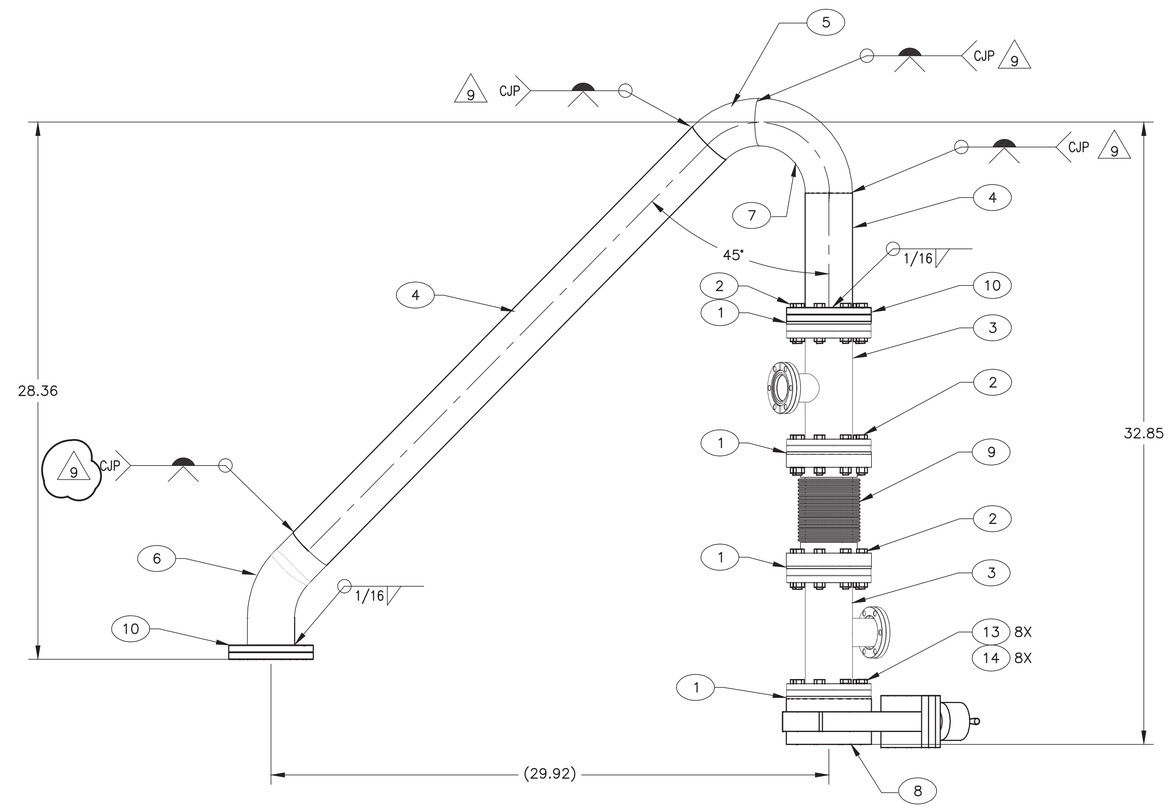

VIEW A−A
SCALE: 1/4

SIZE	INDEX CODE NUMBER				DWG−		REV
	AREA	TYPE	CL	ORIG			
D	200	0666	53	136		571693	2
SCALE: NOTED						SHEET 2	

FMT-D1-REV 2014-01-29

REVISIONS	
REV	DESCRIPTION
1	INCORPORATED FDC'S 8886, 8897, 8961 & 9338. SEE DRF-341132.
2	AS-BUILT AS OF 3/18/2014, SUBMITTAL TO THE STATE FOR RCRA PERMIT, SEE DRF-341590

NOTES:

1. REMOVE ALL BURRS AND SHARP EDGES.
2. ALL MACHINED FILLET RADII .03 MAXIMUM UNLESS OTHERWISE NOTED.
3. USE THREAD LUBRICANT (ITEM 13) ON ALL BOLT THREADS.
4. (Q) FINAL ASSEMBLY SHALL BE FREE OF DIRT, CHIPS, WELDING FLUX, SLAG, SCALE, OIL, GREASE, ETC. PERFORM A VISUAL INSPECTION OF THE FINAL ASSEMBLY PER ASTM A380, PARA 7.2.1.
5. (Q) TORQUE BOLTS ON 4.5" O.D. CF FLANGES TO 15 (+2/-0) FT LB USING A STAR PATTERN.
6. (Q) COMPLETED ASSEMBLY SHALL UNDERGO A PNEUMATIC LEAK TEST IN ACCORDANCE WITH ASME B31.3 AT A PRESSURE OF 16.5 TO 18.5 PSIG. "SNOOP" ALL CONNECTIONS FOR LEAKS. PRESSURE DROP SHALL NOT EXCEED 0.1 PSIG OVER A 10 MINUTE PERIOD.
7. WELDING SHALL BE PERFORMED IN ACCORDANCE WITH ASME B31.3 USING ITEM 12.
8. VISUALLY INSPECT ALL WELDS IN ACCORDANCE WITH ASME B31.3, PARA. 344.4.1 (A) FOR NORMAL FLUID SERVICE. ACCEPTANCE CRITERIA SHALL BE PER ASME B31.3, PARA. 341.3.2
9. PERFORM IN-PROCESS INSPECTION OF WELDS WHERE SPECIFIED PER ASME B31.3, PARA. 344.7 USING LIQUID PENETRANT EXAMINATION OF THE ROOT AND FINAL PASS.
10. LIQUID PENETRANT EXAMINATION SHALL BE PERFORMED IN ACCORDANCE WITH THE BPV CODE SECTION V, ARTICLE 6. ACCEPTANCE CRITERIA SHALL BE:
    A. ALL SURFACES TO BE EXAMINED SHALL BE FREE OF:
        (1) RELEVANT LINEAR INDICATIONS
        (2) RELEVANT ROUNDED INDICATIONS GREATER THAN 5 MM (.188")
        (3) FOUR OR MORE RELEVANT ROUNDED INDICATIONS IN A LINE
    B. SEPARATED BE 1.5 MM (.063") OR LESS, EDGE-TO-EDGE.
    CRACK LIKE INDICATIONS DETECTED, IRRESPECTIVE OF SURFACE CONDITIONS, ARE UNACCEPTABLE.
11. TOLERANCES ON DECIMALS
    .XX = ± .06
    .XXX = ± .005
12. PIPING DESIGN TEMPERATURE = 1000° F.
    TUBING DESIGN TEMPERATURE = 300° F.
13. DESIGN PRESSURE = FULL VACUUM TO 15 PSIG.

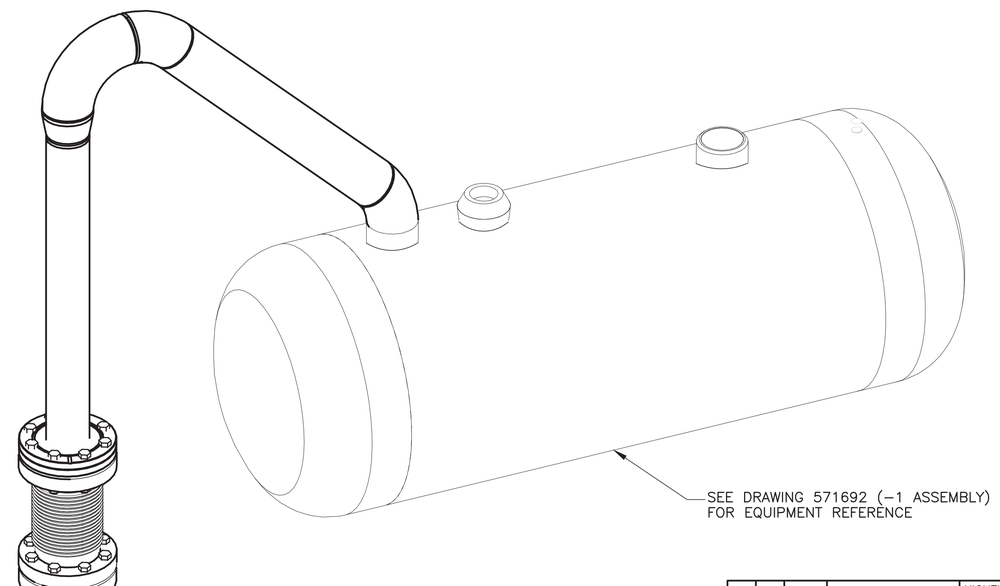

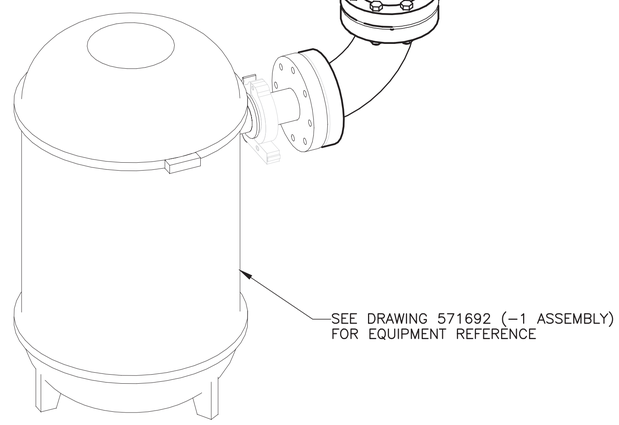

3D VIEW
(SHOWN FOR CLARITY)
SCALE: NONE

QTY REQD	-0 QUAL LEVEL	PART OR IDENTIFYING NO.	NOMENCLATURE OR DESCRIPTION	MATERIAL/SPECIFICATION OR VENDOR NAME	ITEM NO.
	AR	3	77124	NICKEL ANTI-SEIZE THREAD LUBRICANT	LOCTITE CORP.	13
	AR	3		WELD FILLER METAL	ER 308H AWSA5.9	12
						11
	1	3	F0450X200R	4.5", CF FLANGE, ROTATABLE, 2" TUBE TYPE 304L STAINLESS STEEL	KURT J. LESKER CO.	10
	2	3		ELBOW, 2", 45°, SCHED 40, SR BUTT WELD FITTING	TYPE 304H SST ASTM A403	9
	1	3		ELBOW, 2", 90°, SCHED 40, SR BUTT WELD FITTING	TYPE 304H SST ASTM A403	8
	AR	3		PIPE, 2", SCHED 40, SEAMLESS	TYPE 304H SST, ASTM A 312	7
	1	3	SW3120PX20T	PIPE TO TUBING ADAPTER, BUTT WELD	CENTRAL STATES INDUSTRIAL EQUIPMENT CO.	6
	AR	3	SST-02001	TUBING, TYPE 304L, SS 2" OD X .065" WALL THICKNESS	KURT J. LESKER CO.	5
	1	3	L-0450	4.5" CF FLANGED ELBOW, 90°, 2.5" OD X .065" WALL THICKNESS	KURT J. LESKER CO.	4
	1	3	100885030	BELLOWS SECTION,4.5" CF FLANGE TYPE 321 STAINLESS STEEL	MKS INSTRUMENTS, INC.	3
	2	3	HBS31224200	BOLT & NUT SET 5/16-24 X 2" LONG	KURT J. LESKER CO.	2
	2	3	GA-0450NSP	GASKET FOR 4.5" CF FLANGE SILVER PLATED COPPER	KURT J. LESKER CO.	1
		3	-0	ASSEMBLY		0

PARTS LIST

Randy Eastman
CWI
2014.03.20 08:02:00 -06'00'

PROFESSIONAL ENGINEER REGISTERED 4307 STATE OF IDAHO RANDY EASTMAN

I CERTIFY THAT THIS DRAWING REFLECTS THE CURRENT CONSTRUCTED CONDITION AS OF 3/18/2014

INSPECTION REQUIREMENTS
QC REQUIRED
(Q) DENOTES Q/C INSP. REQD.

DASH NO.	NEXT ASSY
-0	571692

APPLICATION

DIMENSIONING AND SYMBOLOGY PER ASME Y14.5-2009 AND STD-11
UNLESS OTHERWISE SPECIFIED
SURFACE ROUGHNESS 125/√
DIMENSIONS AND TOLERANCES ARE IN INCHES
TOLERANCES: .X = ± .1
DECIMALS: ~~.XX = ± .03~~ ~~.XXX = ± .010~~
FRACTIONS ± 1/8
ANGULAR ± 2°
(11)
DO NOT SCALE DRAWING

SIGNATURES/DATES APPLY TO CURRENT RELEASE ONLY	SIGN AND DATE
DESIGN: NA	– –
DRAFTER: J. MONCUR	Jim Moncur CWI 2014.03.19 13:33:34 -06'00'
TECHNICAL CHECK: NA	– –
ENG GROUP SUPERVISOR: NA	– –
DESIGN LEAD/AUTHORITY: D. MORGAN	David Morgan CWI 2014.03.20 08:37:30 -06'00'
DRAFTING CHECK/ EFFECTIVE DATE: K. KELLER	Kris Keller CWI 2014.03.20 09:51:22 -06'00'
PROJECT NUMBER: 31720	
DRF NUMBER: 337562	

Idaho Cleanup Project — CH2M•WG IDAHO, LLC

CPP-666

RH-TRU DISTILLATION SYSTEM

SPOOL PIECE 2

SIZE	INDEX CODE NUMBER AREA	TYPE	CL	ORIG	DWG-	REV
D	200	0666	53	136	571694	2

SCALE: NONE — SHEET 1 OF 2

File: 571694-2.dwg
Path: K:\RH-TRU Distillation\Drawings\DRF-341590
Date: 03/19/14 – 11:46 AM | Layout Name: 571694D1 | ID: MXJ

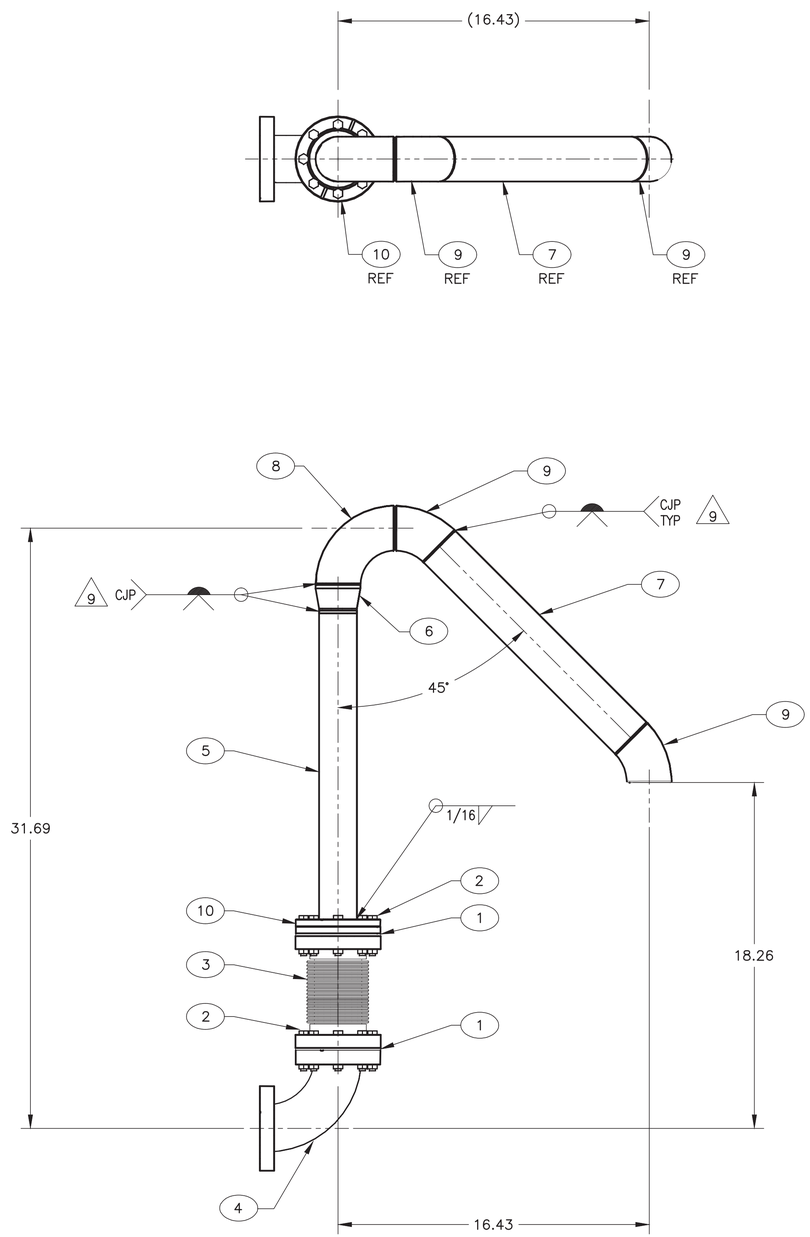

-0 ASSEMBLY

SCALE: 1/4

SIZE	INDEX CODE NUMBER					DWG-	REV
	AREA	TYPE	CL	ORIG			
D	200	0666	53	136		571694	2
SCALE: NOTED						SHEET 2	

FMT-D1-REV 2014-01-29

REVISIONS	
REV	DESCRIPTION
1	INCORPORATED FDC-8784, 8883, 8887, 8937, 8961, AND 8974, SEE DRF-339588
2	AS-BUILT AS OF 3/18/2014, ADDED SHEETS 3 & 4, SUBMITTAL TO STATE FOR RCRA PERMIT SEE DRF-341589

NOTES:

1. REMOVE ALL BURRS AND SHARP EDGES.
2. ALL MACHINED FILLET RADII .03 MAXIMUM UNLESS OTHERWISE NOTED.
3. (Q) FINAL ASSEMBLY SHALL MEET CLEANLINESS REQUIREMENTS OF STD-7022, LEVEL C.
4. REMOVED
5. (Q) COMPLETED ASSEMBLY SHALL UNDERGO A PNEUMATIC LEAK TEST IN ACCORDANCE WITH TPR-4976 "LEAK TEST PROCEDURE", APPENDIX A "BUBBLE TEST-DIRECT PRESSURE TECHNIQUE". USE AIR OR INERT GAS AT A PRESSURE OF 3 PSIG, +0/-0.1 PSIG.
6. WELDING SHALL BE PERFORMED IN ACCORDANCE WITH INL WELD S2.0 USING WELD FILLER METAL, ITEM 7, FOR 304H STAINLESS STEEL FITTINGS AND PIPE OR WELD FILLER METAL. CHARPY IMPACT REQUIREMENTS WILL NOT BE IMPOSED.
7. VISUALLY INSPECT ALL WELDS IN ACCORDANCE WITH TPR-4981, 'VISUAL EXAMINATION' FOR NORMAL FLUID SERVICE. ACCEPTANCE CRITERIA SHALL BE PER APPENDIX A "VISUAL ACCEPTANCE CRITERIA FOR ASME B31.3 WELDS, BASE MATERIALS AND BRAZING" AS SHOWN IN TABLE A-1.
8. PERFORM IN-PROCESS EXAMINATION PER TPR-4981 AND ASME B31.3, PARAGRAPH 344.7.1.
9. LIQUID PENETRANT EXAMINATION SHALL BE PERFORMED ON ALL WELDS IN ACCORDANCE WITH TPR-4975 "LIQUID PENETRANT EXAMINATION", APPENDIX B WITH ACCEPTANCE PER APPENDIX J, ACCEPTANCE CRITERIA FOR ASME B31.3 WELDS, NORMAL FLUID SERVICE. USE LIQUID PENETRANT EXAMINATION OF ROOT AND FINAL PASS FOR BUTT WELDS AND THE FINAL PASS FOR FILLET WELDS.
10. TOLERANCES ON DECIMALS
    .XX = ± .06
    .XXX = ± .005
11. DESIGN TEMPERATURE = 1000° F.
12. DESIGN PRESSURE = FULL VACUUM TO 3 PSIG.

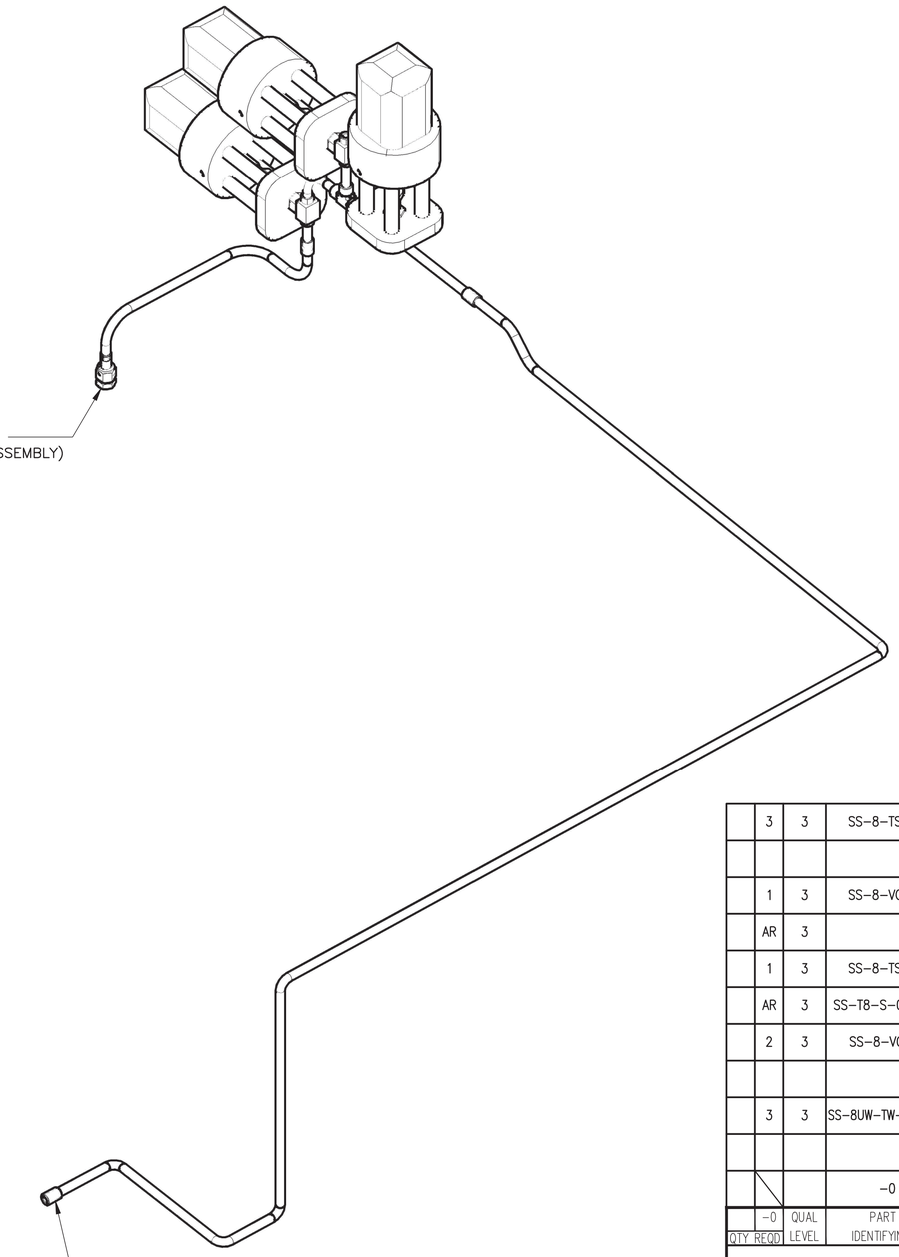

3D VIEW
(SHOWN FOR CLARITY)
SCALE: NONE

QTY REQD -0	QUAL LEVEL	PART OR IDENTIFYING NO.	NOMENCLATURE OR DESCRIPTION	MATERIAL/SPECIFICATION OR VENDOR NAME	ITEM NO.
3	3	SS-8-TSW-6	1/2" TUE SOCKET WELD UNION, TYPE 316 SS	SWAGELOK	10
1	3	SS-8-VCR-3	SOCKET WELD GLAND, TYPE 316 SS 1/2" VCR X 1/2" TUBE	SWAGELOK	8
AR	3		WELD FILLER METAL	ER 308 OR 308L AWSA5.9	7
1	3	SS-8-TSW-3	TUBE SOCKET WELD TEE, TYPE 316 SS 1/2" X 1/2" X 1/2"	SWAGELOK	6
AR	3	SS-T8-S-065-20	1/2" OD TUBING, TYPE 316 SS .065" WALL THICKNESS	SWAGELOK	5
2	3	SS-8-VCR-1	1/2" VCR FEMALE NUT TYPE 316 STAINLESS STEEL	SWAGELOK	4
					3
3	3	SS-8UW-TW-HT-6CM	BELLOWS, SEALED VALVE, 1/2" TUBE SOCKET WELD CONNECTIONS	SWAGELOCK	2
					1
		-0	ASSEMBLY		0

PARTS LIST

Randy Eastman
CWI
2014.03.20 07:59:00'

PROFESSIONAL ENGINEER REGISTERED 4307 STATE OF IDAHO RANDY EASTMAN

I CERTIFY THAT THIS DRAWING REFLECTS THE CURRENT CONSTRUCTED CONDITION AS OF 3/18/2014

INSPECTION REQUIREMENTS
QC REQUIRED
(Q) DENOTES Q/C INSP. REQD.

DASH NO.	NEXT ASSY
-0	571692

APPLICATION

DIMENSIONING AND SYMBOLOGY PER ASME Y14.5-2009 AND STD-11
UNLESS OTHERWISE SPECIFIED
SURFACE ROUGHNESS 125/
DIMENSIONS AND TOLERANCES ARE IN INCHES
TOLERANCES: .X = ± .1
DECIMALS: ~~.XX = ± .03~~ ~~.XXX = ± .010~~
FRACTIONS ± 1/8
ANGULAR ± 2° (10)
DO NOT SCALE DRAWING

SIGNATURES/DATES APPLY TO CURRENT RELEASE ONLY	SIGN AND DATE
DESIGN: NA	– –
DRAFTER: J. MONCUR	Jim Moncur CWI 2014.03.19 14:02:39 -06'00'
TECHNICAL CHECK: NA	– –
ENG GROUP SUPERVISOR: NA	– –
DESIGN LEAD/AUTHORITY: D. MORGAN	David Morgan CWI 2014.03.20 08:35:08 -06'00'
DRAFTING CHECK/ EFFECTIVE DATE: K. KELLER	Kris Keller CWI 2014.03.20 09:48:52 -06'00'
PROJECT NUMBER: 31720	
DRF NUMBER: 337562	

Idaho Cleanup Project — CH2M•WG IDAHO, LLC

CPP-666

RH-TRU DISTILLATION SYSTEM

SPOOL PIECE 3

SIZE	INDEX CODE NUMBER AREA	TYPE	CL	ORIG	DWG-	REV
D	200	0666	53	136	571695	2

SCALE: NONE — SHEET 1 OF 4

File: 571695-2.dwg
Path: K:\RH-TRU Distillation\Drawings\DRF-341589
Date: 03/19/14 – 10:20 AM | Layout Name: SHEET 1
ID: MXJ

FMT-D2-REV 3.2

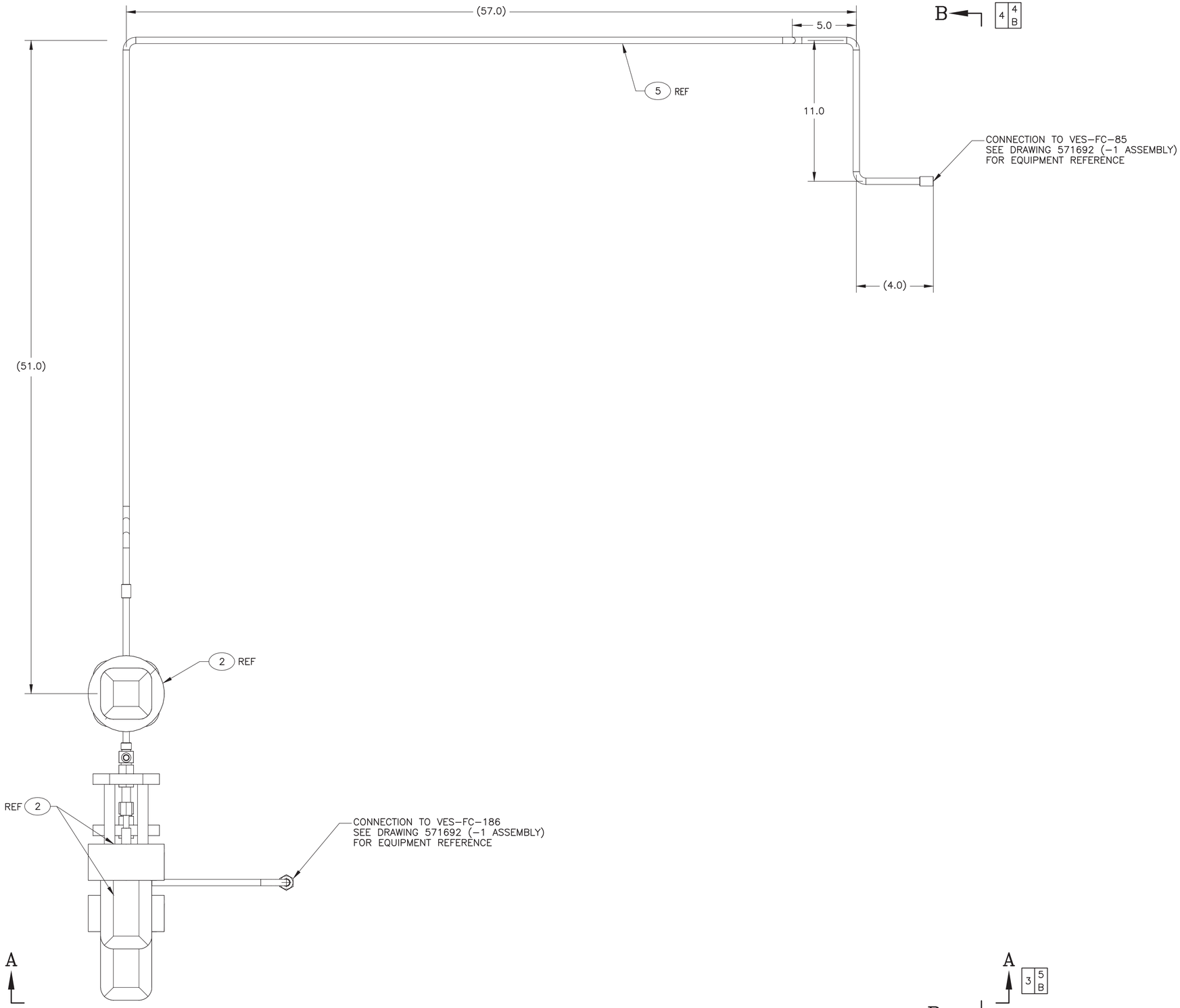

-0 ASSEMBLY

SCALE: 1/4

SIZE	CAGE CODE	INDEX CODE NUMBER					DWG-	REV
		AREA	TYPE	CL	ORIG			
D	01MF3	200	0666	53	136		571695	2
SCALE: NOTED							SHEET 2	

File: 571695-2.dwg
Path: K:\RH-TRU Distillation\Drawings\DRF-341589
Date: 03/19/14 - 10:20 AM | Layout Name: SHEET 2
ID: MXJ

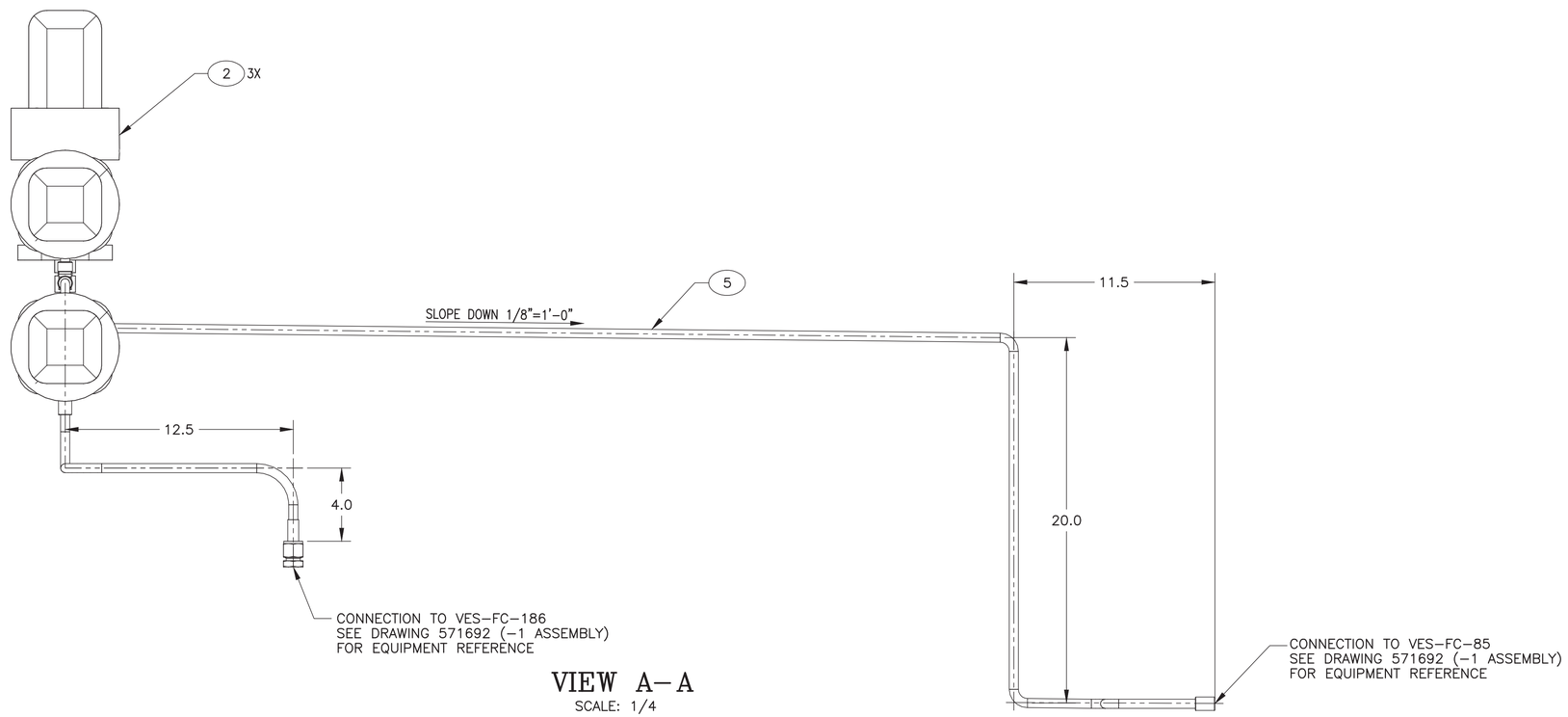

VIEW A-A
SCALE: 1/4

SIZE	CAGE CODE	INDEX CODE NUMBER						REV
		AREA	TYPE	CL	ORIG			
D	01MF3	200	0666	53	136	DWG-571695		2
SCALE: NOTED							SHEET 3	

FMT-D2-REV 3.2
File: 571695-2.dwg
Path: K:\RH-TRU Distillation\Drawings\DRF-341589
Date: 03/19/14 - 10:20 AM | Layout Name: SHEET 3 | ID: MXJ

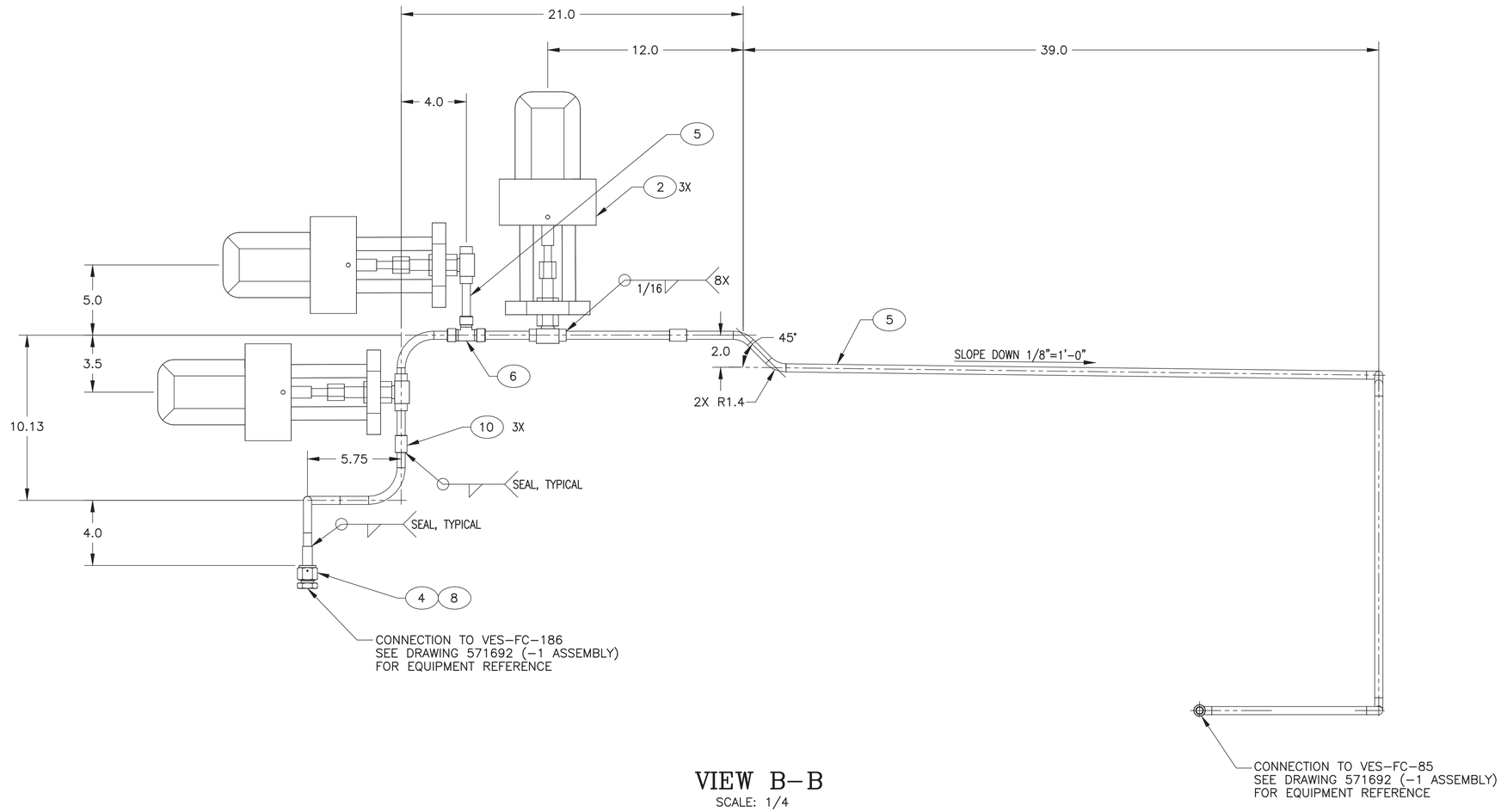

VIEW B-B

SCALE: 1/4

SIZE	CAGE CODE	INDEX CODE NUMBER					
		AREA	TYPE	CL	ORIG		REV
D	01MF3	200	0666	53	136	DWG-571695	2
SCALE: NOTED						SHEET 4	

File: 571695-2.dwg
Path: K:\RH-TRU Distillation\Drawings\DRF-341589
Date: 03/19/14 - 10:20 AM | Layout Name: SHEET 4
ID: MXJ

FMT-D1-REV 2014-01-29

REVISIONS	
REV	DESCRIPTION
1	INCORPORATED FDC-8784, 8961, 9109, 9196, 9338, 9369 AND 9402 SEE DRF-340403
2	INCORPORATED FDC-9528. SEE DRF-341257.
3	AS-BUILT AS OF 3/18/2014, SUBMITTAL TO STATE FOR RCRA PERMIT, SEE DRF-341590

NOTES:

1. REMOVE ALL BURRS AND SHARP EDGES.
2. ALL MACHINED FILLET RADII .03 MAXIMUM UNLESS OTHERWISE NOTED.
3. (Q) FINAL ASSEMBLY SHALL BE FREE OF DIRT, CHIPS, WELDING FLUX, SLAG, SCALE, OIL, GREASE, ETC. PERFORM A VISUAL INSPECTION OF THE FINAL ASSEMBLY PER ASTM A380, PARA 7.2.1.
4. (Q) COMPLETED ASSEMBLY SHALL UNDERGO A PNEUMATIC LEAK TEST IN ACCORDANCE WITH ASME B31.3 AT A PRESSURE OF 16.5 TO 18.5 PSIG. "SNOOP" ALL CONNECTIONS FOR LEAKS. PRESSURE DROP SHALL NOT EXCEED 0.1 PSIG OVER A 10 MINUTE PERIOD.
5. (Q) WELDING SHALL BE PERFORMED IN ACCORDANCE WITH ASME B31.3 USING ITEM 4.
6. (Q) VISUALLY INSPECT ALL WELDS IN ACCORDANCE WITH ASME B31.3, PARA. 341.4.1 (A) FOR NORMAL FLUID SERVICE. ACCEPTANCE CRITERIA SHALL BE PER ASME B31.3, PARA. 341.3.2
7. (Q) PERFORM IN-PROCESS INSPECTION OF WELDS WHERE SPECIFIED PER ASME B31.3, PARA. 344.7 USING LIQUID PENETRANT EXAMINATION OF THE ROOT AND FINAL PASS.
8. (Q) LIQUID PENETRANT EXAMINATION SHALL BE PERFORMED IN ACCORDANCE WITH THE BPV CODE SECTION V, ARTICLE 6. ACCEPTANCE CRITERIA SHALL BE:
   A. ALL SURFACES TO BE EXAMINED SHALL BE FREE OF:
      (1) RELEVANT LINEAR INDICATIONS
      (2) RELEVANT ROUNDED INDICATIONS GREATER THAN 5 MM (3/16")
      (3) FOUR OR MORE RELEVANT ROUNDED INDICATIONS IN A LINE
   B. SEPARATED BY 1.5 MM (1/16") OR LESS, EDGE-TO-EDGE.
   CRACK LIKE INDICATIONS DETECTED, IRRESPECTIVE OF SURFACE CONDITIONS, ARE UNACCEPTABLE.
9. TOLERANCES ON DECIMALS
   .XX = ± .06
   .XXX = ± .005
10. DESIGN TEMPERATURE = 800° F.
11. DESIGN PRESSURE = FULL VACUUM TO 15 PSIG.
12. REMOVED.
13. REMOVED.

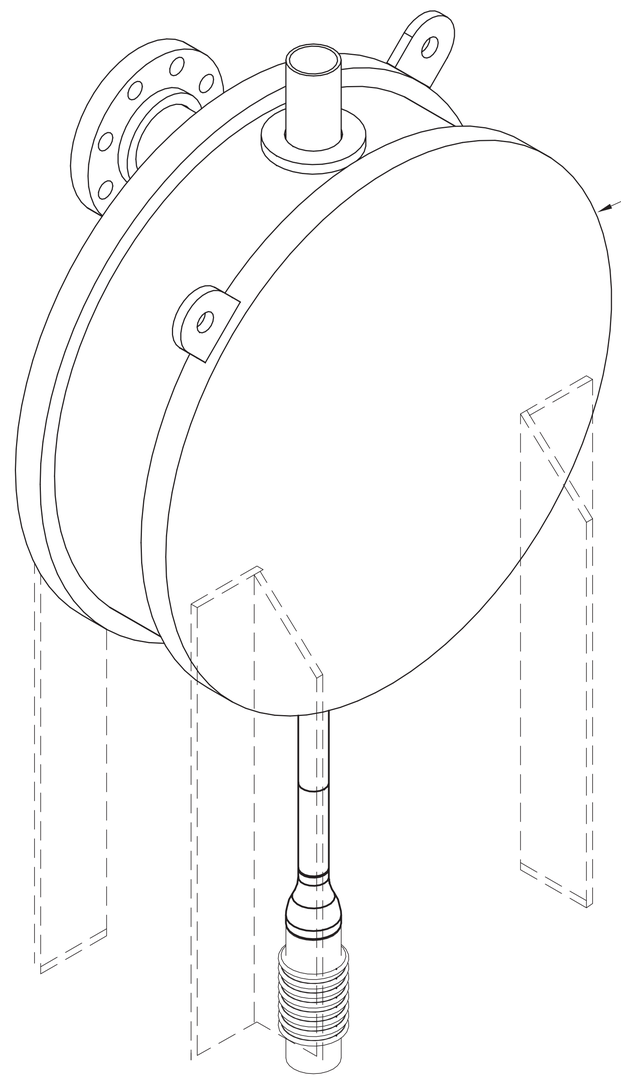

3D VIEW
(SHOWN FOR CLARITY)
SCALE: NONE

QTY REQD -0	QUAL LEVEL	PART OR IDENTIFYING NO.	NOMENCLATURE OR DESCRIPTION	MATERIAL/SPECIFICATION OR VENDOR NAME	ITEM NO.
	1	3		PIPE, 1" SCHED 40S, SEAMLESS	304H SST ASTM A312	15
				REMOVED		14
				REMOVED		13
				REMOVED		12
				REMOVED		11
						10
						9
						8
						7
				REMOVED		6
						5
(5)	AR	3		WELD FILLER METAL	ER 308H AWSA5.9	4
	1	3		REDUCER, 2" X 1", BUTT WELD SCHED 40	304H SST, ASTM A403	3
						2
	1	3	US-2-12-85L	BELLOWS EXPANSION JOINT, 2" X WELDED ENDS, SST, ASTM A240-T321	U. S. BELLOWS	1
		3	-0	ASSEMBLY		0

PARTS LIST

Randy Eastman
CWI
2014.03.20 08:06:06'00'

PROFESSIONAL ENGINEER REGISTERED 4307 STATE OF IDAHO RANDY EASTMAN

I CERTIFY THAT THIS DRAWING REFLECTS THE CURRENT CONSTRUCTED CONDITION AS OF 3/18/2014

INSPECTION REQUIREMENTS	
QC REQUIRED	
(Q) DENOTES Q/C INSP. REQD.	

DASH NO.	NEXT ASSY
-0	571692

APPLICATION

DIMENSIONING AND SYMBOLOGY PER ASME Y14.5-2009 AND STD-11 UNLESS OTHERWISE SPECIFIED
SURFACE ROUGHNESS 125/
DIMENSIONS AND TOLERANCES ARE IN INCHES
TOLERANCES: .X = ± .1
DECIMALS: ~~.XX = ± .03~~ ~~.XXX = ± .010~~
FRACTIONS ± 1/8
ANGULAR ± 2°
(9)
DO NOT SCALE DRAWING

SIGNATURES/DATES APPLY TO CURRENT RELEASE ONLY	SIGN AND DATE
DESIGN: NA	– –
DRAFTER: J. MONCUR	Jim Moncur CWI 2014.03.19 12:49:39 -06'00'
TECHNICAL CHECK: NA	– –
ENG GROUP SUPERVISOR: NA	– –
DESIGN LEAD/AUTHORITY: D. MORGAN	David Morgan CWI 2014.03.20 08:36:09 -06'00'
DRAFTING CHECK/ EFFECTIVE DATE: K. KELLER	Kris Keller CWI 2014.03.20 09:50:38 -06'00'
PROJECT NUMBER: 31720	
DRF NUMBER: 337562	

Idaho Cleanup Project CH2M•WG IDAHO, LLC

CPP-666

RH-TRU DISTILLATION SYSTEM

SPOOL PIECE 5

SIZE	INDEX CODE NUMBER AREA	TYPE	CL	ORIG	DWG-	REV
D	200	0666	53	136	571701	3

SCALE: NONE SHEET 1 OF 2

File: 571701-3.dwg
Path: K:\RH-TRU Distillation\Drawings\DRF-341590
Date: 03/19/14 – 12:46 PM Layout Name: 571701 01
ID: MXJ

FMT-D2-REV 2014-01-29

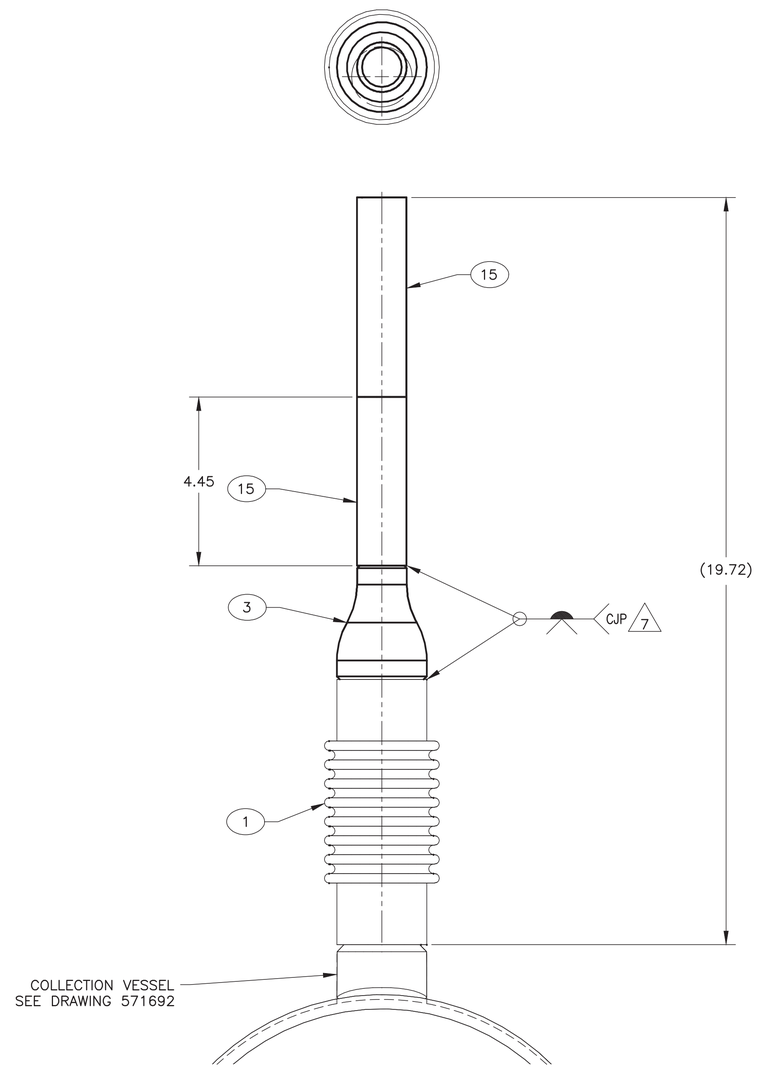

-0 ASSEMBLY

SCALE: 1/2

SIZE	INDEX CODE NUMBER				DWG-		REV
	AREA	TYPE	CL	ORIG			
D	200	0666	53	136		571701	3
SCALE: NOTED						SHEET 2	

File: 571701-3.dwg
Path: K:\RH-TRU Distillation\Drawings\DRF-341590
Date: 03/19/14 - 12:46 PM | Layout Name: 571701 02
ID: MXJ

FMT-D1-REV 2014-01-29

REVISIONS	
REV	DESCRIPTION
1	INCORPORATED FDC-8784, 8946, 8972, 8991 AND 9468 SEE DRF-341134
2	AS-BUILT AS OF 3/18/2014, SUBMITTAL TO STATE FOR RCRA PERMIT, SEE DRF-341590

NOTES:

1. REMOVE ALL BURRS AND SHARP EDGES.
2. ALL MACHINED FILLET RADII .03 MAXIMUM UNLESS OTHERWISE NOTED.
3. WELDING SHALL BE PERFORMED IN ACCORDANCE WITH AWS D1.1 AND USING ITEM 6.
4. VISUALLY INSPECT FINAL PASS OF ALL WELDS. ACCEPTANCE CRITERIA SHALL BE:

   NO CRACKS.

   COMPLETE FUSION SHALL EXIST BETWEEN WELD METAL AND BASE METAL.

   UNDERCUT SHALL NOT EXCEED .01" FOR MATERIAL LESS THAN 3/16". FOR MATERIAL 3/16" AND THICKER, UNDERCUT NOT TO EXCEED 1/32".

   FOR ALL WELDS THE SUM OF VISIBLE POROSITY 1/32" OR GREATER IN DIAMETER SHALL NOT EXCEED 3/8" IN ANY LINEAR INCH OF WELD AND SHALL NOT EXCEED 3/4" IN ANY 12" LENGTH OF WELD.

   ALL CRATERS SHALL BE FILLED TO THE FULL CROSS-SECTION OF THE WELD EXCEPT FOR ENDS OF FILLET WELDS OUTSIDE THEIR EFFECTIVE LENGTH.

   FILLET WELDS SHALL BE AT LEAST THE SIZE SPECIFIED IN THE WELD SYMBOL.

Q 5. FINAL ASSEMBLY SHALL BE FREE OF DIRT, CHIPS, WELDING FLUX, SLAG, SCALE, OIL, GREASE, ECT. PERFORM A VISUAL INSPECTION OF THE FINAL ASSEMBLY.

Q 6. MARK PER STD-7006-2A OR STD-7006-2D IN 1/2" HIGH CHARACTERS WITH INFORMATION AS SHOWN WHERE YYY IS THE MEASURED WEIGHT OF THE ASSEMBLY. LOCATE APPROXIMATELY WHERE SHOWN. FILL CHARACTERS WITH SANFORD T.E.C. MARKER #13401 OR #13501, ITW DYMON FORMULA Q404 INK OR OTHER HIGH-PURITY, LOW-CHLORIDE BLACK INK THAT COMPLIES WITH ASTM C1217-00 OR RTD F7-3T. DO NOT APPLY VARNISH OVER MARKING.

Q 7. VERIFY MARKINGS HAVE BEEN ACCURATELY APPLIED AND RECORD THE MEASURED WEIGHT.

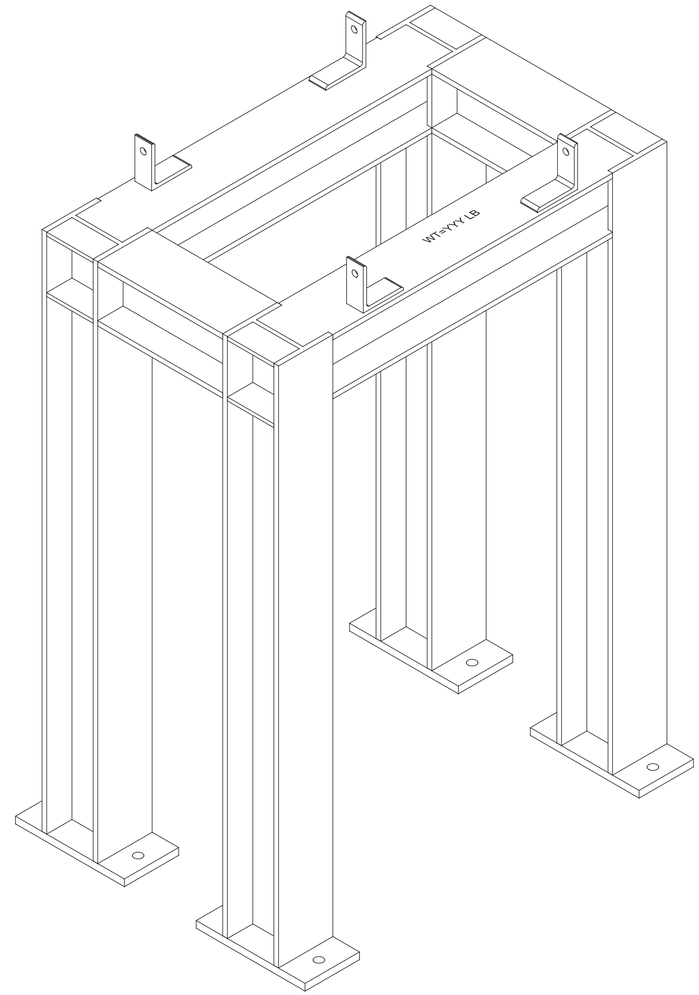

3D VIEW
(SHOWN FOR CLARITY)
SCALE: 1/4

QTY REQD	-0	QUAL LEVEL	PART OR IDENTIFYING NO.	NOMENCLATURE OR DESCRIPTION	MATERIAL/SPECIFICATION OR VENDOR NAME	ITEM NO.
	4	3	-7	BOLTING CLIP	ANGLE CS ASTM A36	7
	AR	3		WELD FILLER METAL	ER70S AWS A5.18	6
	2	3	-5	SHORT SUPPORT BEAM	BEAM CS ASTM A36	5
	2	3	-4	LONG SUPPORT BEAM	BEAM CS ASTM A36	4
	4	3	-3	SUPPORT LEG	BEAM CS ASTM A36	3
	4	3	-2	BASE PLATE	BAR OR PLATE CS ASTM A36	2
	8	3	-1	SIDE PLATE	BAR OR PLATE CS ASTM A36	1
		3	-0	ASSEMBLY		0

PARTS LIST

Randy Eastman
CWI
2014.03.20 08:02:50 -06'00'

PROFESSIONAL ENGINEER REGISTERED 4307 STATE OF IDAHO RANDY EASTMAN

I CERTIFY THAT THIS DRAWING REFLECTS THE CURRENT CONSTRUCTED CONDITION AS OF 3/18/2014

INSPECTION REQUIREMENTS	-0	571692
QC REQUIRED	DASH NO.	NEXT ASSY
Q DENOTES Q/C INSP. REQD.	APPLICATION	

DIMENSIONING AND SYMBOLOGY PER ASME Y14.5-2009 AND STD-11
UNLESS OTHERWISE SPECIFIED
SURFACE ROUGHNESS 125
DIMENSIONS AND TOLERANCES ARE IN INCHES

TOLERANCES: .X = ± .1
DECIMALS: .XX = ± .03
.XXX = ± .010
FRACTIONS ± 1/8
ANGULAR ± 2°

DO NOT SCALE DRAWING

SIGNATURES/DATES APPLY TO CURRENT RELEASE ONLY	SIGN AND DATE
DESIGN: NA	– –
DRAFTER: J. MONCUR	Jim Moncur CWI 2014.03.19 13:38:51 -06'00'
TECHNICAL CHECK: NA	– –
ENG GROUP SUPERVISOR: NA	– –
DESIGN LEAD/AUTHORITY: D. MORGAN	David Morgan CWI 2014.03.20 08:36:58 -06'00'
DRAFTING CHECK/ EFFECTIVE DATE: K. KELLER	Kris Keller CWI 2014.03.20 09:51:02 -06'00'
PROJECT NUMBER: 31720	
DRF NUMBER: 337681	

Idaho Cleanup Project CH2M•WG IDAHO, LLC

INTEC-666

RH-TRU DISTILLATION SYSTEM

CONDENSER SUPPORT ASSEMBLY

SIZE	INDEX CODE NUMBER AREA	TYPE	CL	ORIG	DWG-	REV
D	200	0666	61	136	571697	2
SCALE: NOTED					SHEET 1 OF 2	

File: 571697-2.dwg
Path: K:\RH-TRU Distillation\DrawFgs\DRF-341590
Date: 03/19/14 – 12:34 PM | Layout Name: 571697_1
ID: MXJ

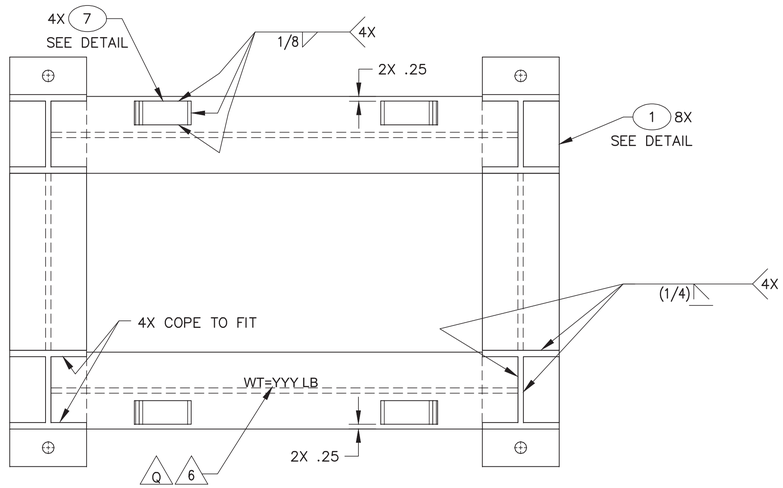

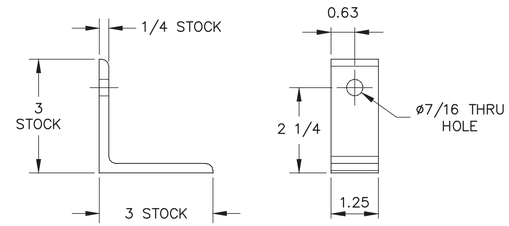

7 DETAIL
SCALE 1/2

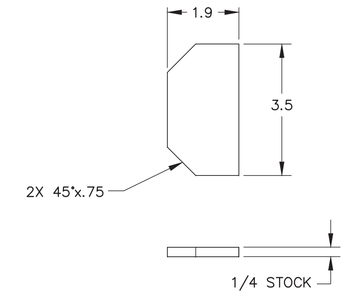

1 DETAIL
SCALE 1/2

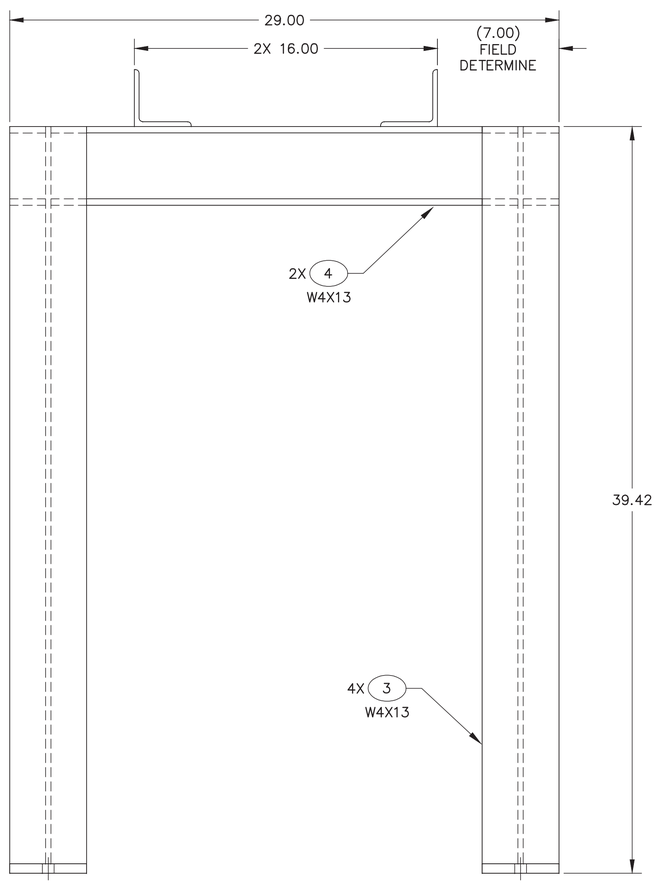

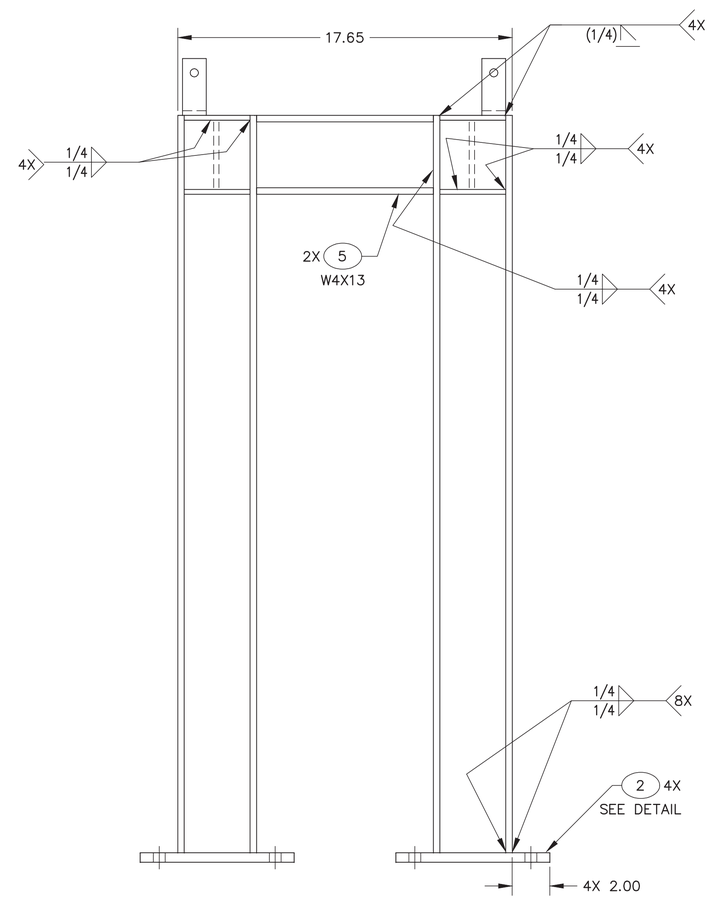

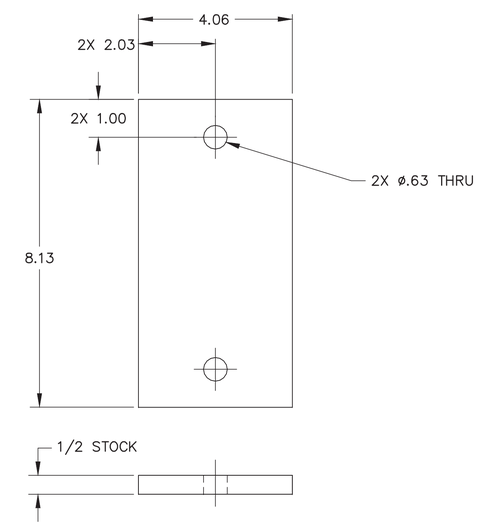

2 DETAIL
SCALE 1/2

-0 ASSEMBLY
SCALE: 1/4

SIZE	INDEX CODE NUMBER					DWG-		REV
	AREA	TYPE	CL	ORIG				
D	200	0666	61	136			571697	2
SCALE: NOTED							SHEET 2	

FMT-D1-REV 2014-01-29

REVISIONS	
REV	DESCRIPTION
1	INCORP'D FDCs 8964, 8965, 9017, 9053, 9064; COMPLETELY REVISED; ADDED SHEET 3; SEE DRF-341386
2	AS-BUILT AS OF 3/18/2014, SUBMITTAL TO STATE FOR RCRA PERMIT, SEE DRF-341590

NOTES:

1. REMOVE ALL BURRS AND SHARP EDGES.
2. FINAL ASSEMBLY SHALL MEET CLEANLINESS REQUIREMENT OF STD-7022 LEVEL D.
3. WELD PER INL WELD PROCEDURE S2.0 USING WELD FILLER METAL (ITEM 6).
4. WELD JOINT PREPARATION GEOMETRY IS AT WELDERS DISCRETION.
5. (Q) VISUALLY INSPECT FINAL PASS OF ALL WELDS. ACCEPTANCE CRITERIA SHALL BE PER TPR-4981, APPENDIX H VISUAL ACCEPTANCE CRITERIA FOR AWS D1.3 WELDS AND BASE MATERIALS.
6. MATERIAL MUST HAVE TYPICAL CERTIFIED MATERIAL TEST REPORTS (CMTRs) ISSUED BY THE ORIGINAL MANUFACTURER OR INDEPENDENT TESTING LABORATORY PERFORMING MATERIAL TESTING WHICH CERTIFIES THAT THE MATERIAL HAS BEEN INSPECTED AND TESTED IN ACCORDANCE WITH THE REQUIREMENTS OF THE SPECIFICATION AND THAT THE RESULTS OF THE CHEMICAL ANALYSES AND MECHANICAL TESTS MEET THE REQUIREMENTS OF THE SPECIFICATION FOR THE SPECIFIC GRADE. THE HEAT NUMBER SHALL BE MARKED ON THE CMTRs.
7. MATERIAL MUST HAVE TYPICAL CERTIFIED MATERIAL TEST REPORTS (CMTRs) ISSUED BY THE ORIGINAL MANUFACTURER OR INDEPENDENT TESTING LABORATORY PERFORMING MATERIAL TESTING WHICH CERTIFIES THAT THE MATERIAL HAS BEEN INSPECTED AND TESTED IN ACCORDANCE WITH THE REQUIREMENTS OF THE SPECIFICATION AND THAT THE RESULTS OF THE CHEMICAL ANALYSES MEET THE REQUIREMENTS OF THE SPECIFICATION FOR THE AWS MATERIAL CLASSIFICATION. EACH END OF CUT LENGTHS OF WELD FILLER METAL SHALL BE MARKED (OR MARK THE END OF THE SPOOLED WIRE) SHOWING THE AWS MATERIAL CLASSIFICATION AND HEAT NUMBER. THE HEAT NUMBER MUST APPEAR ON THE CMTRs.
8. THE PAN ASSEMBLY CONSTITUTES A SECONDARY CONFINEMENT FOR RCRA PURPOSES.
9. THE PAN ASSEMBLY HAS A CAPACITY OF APPROXIMATELY 65.5 GALLONS.
10. ALL FUTURE PENETRATIONS SHALL BE SEALED USING HEAT RESISTANT SEALANT (ITEM 5).
11. PT ALL INSIDE WELDS IN ACCORDANCE WITH TPR-4975, APPENDIX B. ACCEPTANCE CRITERIA SHALL BE NO CRACKS AND NO ROUNDED INDICATIONS GREATER THAN 1/8-INCH.

FIELD INSTALLATION NOTES:

15. ALL MEASUREMENTS SHALL BE FIELD VERIFIED.
16. EACH OF THE FLOOR CONTAINMENT SECTIONS SHALL BE FIELD FIT.
17. ANY PENETRATIONS SHALL BE SEALED BY USING HEAT RESISTANT SEALANT (ITEM 5) OR EQUIVALENT.
18. ALL FLOOR OBSTRUCTIONS WILL BE REMOVED PRIOR TO INSTALLING FLOOR CONTAINMENT.
19. FIELD FIT AND MATCH DRILL EXTENSION ASSEMBLY (ITEM 1). INSTALL ANCHORS (ITEM 4) PER MANUFACTURER'S INSTRUCTIONS.
20. OVERALL DIMENSIONS OF THE FLOOR CONTAINMENT ARE APPROXIMATE AND SHALL BE ALTERED AS NEEDED TO ACHIEVE DESIRED COVERAGE.
21. FIELD MEASURE AND CUT THRESHOLD (ITEM 3) AS NEEDED.

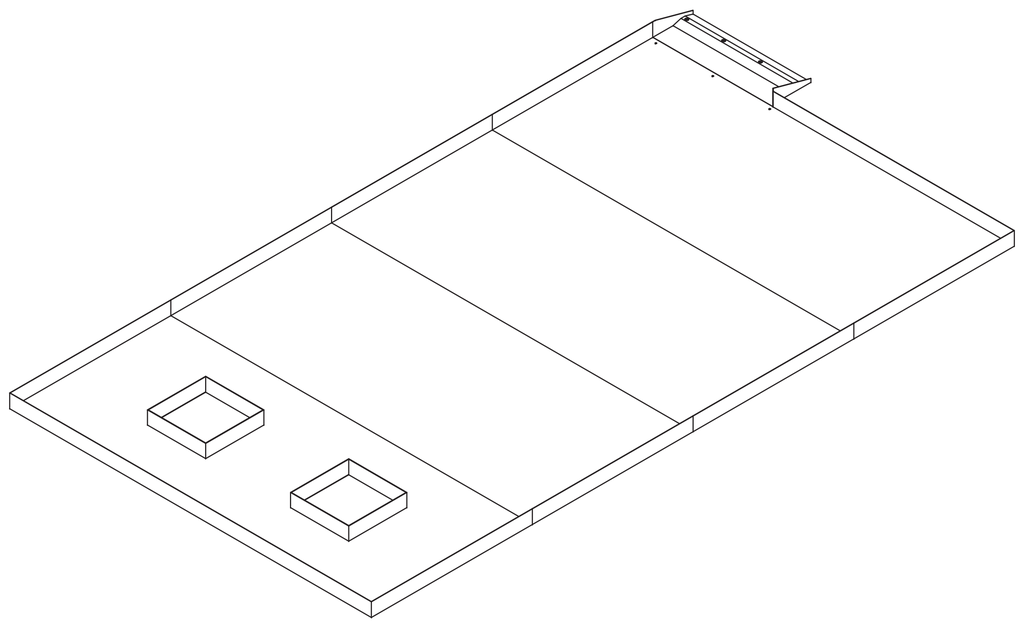

3D VIEW
(SHOWN FOR CLARITY)
SCALE: NONE

QTY REQD -1	QTY REQD -0	QUAL LEVEL	PART OR IDENTIFYING NO.	NOMENCLATURE OR DESCRIPTION	MATERIAL/SPECIFICATION OR VENDOR NAME	ITEM NO.
AR	AR	3		WELD FILLER MATERIAL	ER308 OR ER308L AWS A5.9	6
	AR	3	736	HEAT RESISTANT SEALANT	DOW CORNING OR EQUAL	5
	4	3	00418055	SCREW ANCHOR WITH WASHER KH-EZ 3/8 X 1-7/8 LONG	HILTI	4
	1	3	571518-0	THRESHOLD		3
AR	AR	3	-2	FLOOR CONTAINMENT SHEETING	SHEET 304 OR 304L SST ASTM A240	2
	1	3	-1	EXTENSION ASSEMBLY		1
		3	-0	ASSEMBLY		0

PARTS LIST

Eric Decker
PORTLAND, OR
2014.03.20 13:46:00 -06'00'

PROFESSIONAL ENGINEER
13561
STATE OF IDAHO
ERIC DECKER

I CERTIFY THAT THIS DRAWING REFLECTS THE CURRENT CONSTRUCTED CONDITION AS OF 3/18/2014

INSPECTION REQUIREMENTS	-0	FINAL
QC REQUIRED	DASH NO.	NEXT ASSY
(Q) DENOTES Q/C INSP. REQD.	APPLICATION	

DIMENSIONING AND SYMBOLOGY PER ASME Y14.5-2009 AND STD-11
UNLESS OTHERWISE SPECIFIED
SURFACE ROUGHNESS 125
DIMENSIONS AND TOLERANCES ARE IN INCHES
TOLERANCES: .X = ± .1
DECIMALS: .XX = ± .03, .XXX = ± .010
FRACTIONS ± 1/8
ANGULAR ± 2°
DO NOT SCALE DRAWING

SIGNATURES/DATES APPLY TO CURRENT RELEASE ONLY	SIGN AND DATE
DESIGN: NA	– –
DRAFTER: C. WRIDE	Caid Wride CWI 2014.03.19 14:12:45 -06'00'
TECHNICAL CHECK: NA	– –
ENG GROUP SUPERVISOR: NA	– –
DESIGN LEAD/AUTHORITY: D. MORGAN	David Morgan CWI 2014.03.20 08:35:49 -06'00'
DRAFTING CHECK/ EFFECTIVE DATE: K. KELLER	Kris Keller CWI 2014.03.20 14:03:00 -06'00'
PROJECT NUMBER: 31720	
DRF NUMBER: 338608	

Idaho Cleanup Project
CH2M•WG IDAHO, LLC

INTEC CPP-666
RH-TRU DISTILLATION SYSTEM
DNI ROOM SECONDARY CONTAINMENT

PAN ASSEMBLY

SIZE	INDEX CODE NUMBER: AREA	TYPE	CL	ORIG	DWG-	REV
D	200	0666	62	136	571718	2

SCALE: NONE
SHEET 1 OF 3

File: 571718-2.dwg
Path: K:\RH-TRU Distillation\Drawings\DRF-341590
Date: 03/19/14 – 8:39 AM | Layout Name: Sheet 1 | ID: MXJ

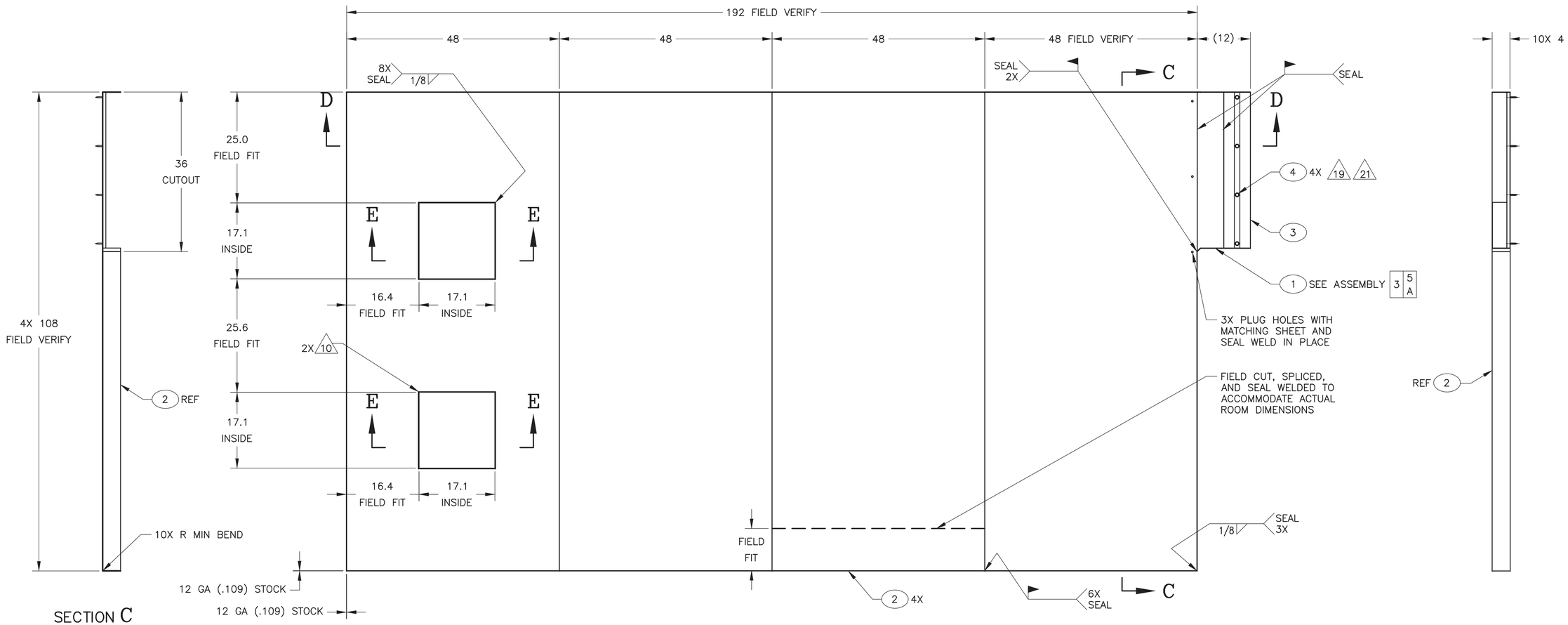

SECTION C
SCALE: 1" = 1'-0"

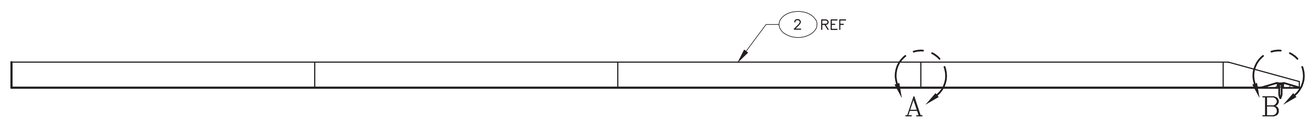

SECTION D–D
SCALE: 1" = 1'-0"

–0 ASSEMBLY
SCALE: 1" = 1'-0"

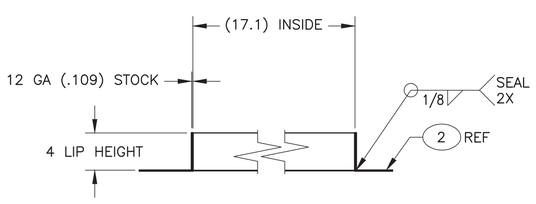

SECTION E–E
SCALE: 1/8
2X

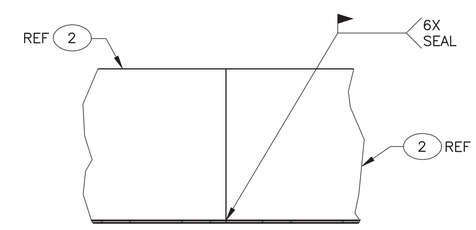

VIEW A
SCALE: 1/2
3X

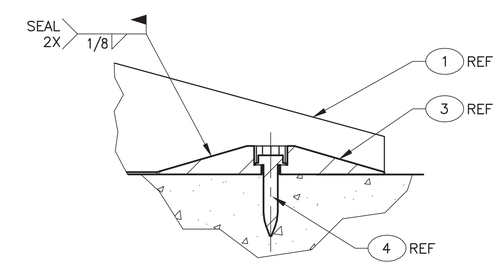

VIEW B
SCALE: 1/2

SIZE	INDEX CODE NUMBER						
	AREA	TYPE	CL	ORIG			REV
D	200	0666	62	136	DWG–	571718	2
SCALE: NOTED						SHEET 2	

File: 571718-2.dwg
Path: K:\RH-TRU Distillation\Drawings\DRF-341590
Date: 03/19/14 – 8:39 AM | Layout Name: Sheet 2 | D: MXJ

FMT-D2-REV 2014-01-29

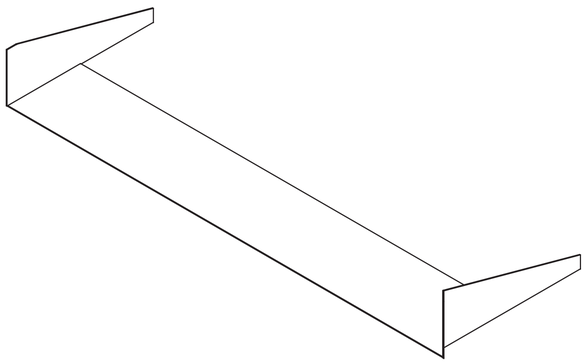

3D VIEW
(SHOWN FOR CLARITY)
SCALE: NONE

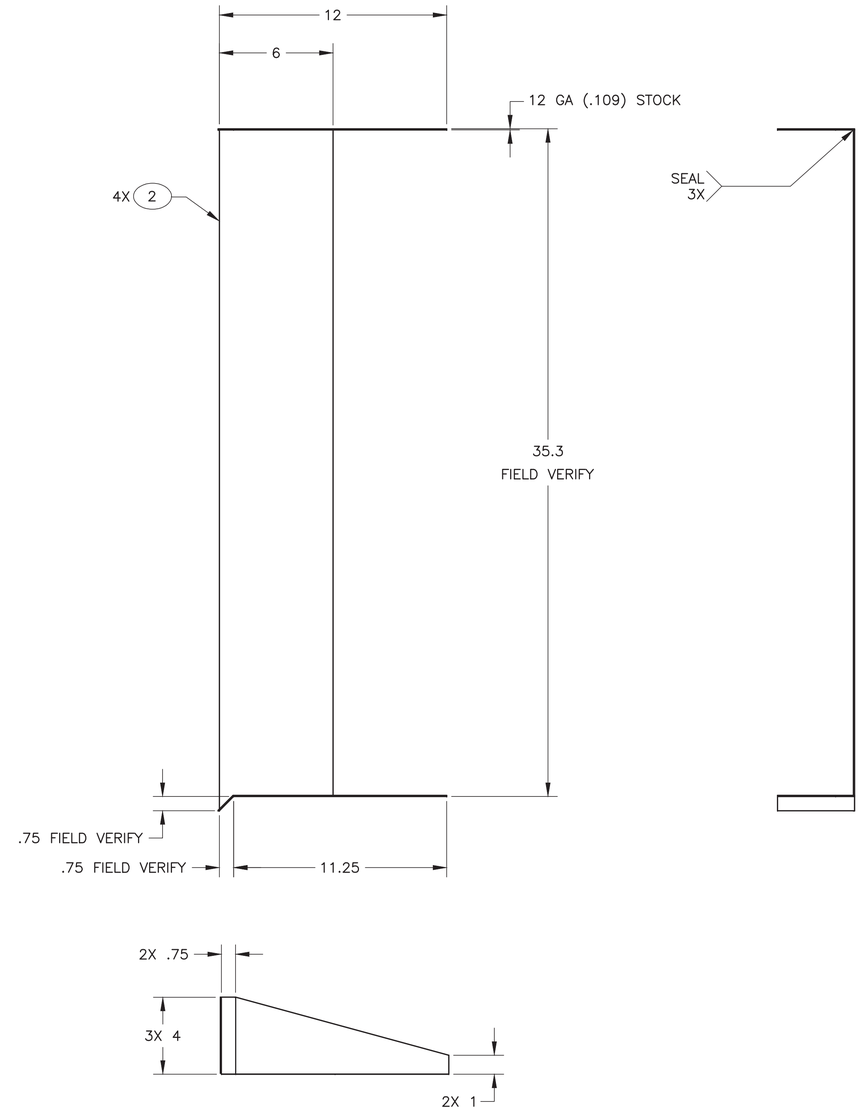

−1 ASSEMBLY
SCALE: 1/4

SIZE	INDEX CODE NUMBER						
	AREA	TYPE	CL	ORIG			
D	200	0666	62	136	DWG−	571718	REV 2
SCALE: NOTED						SHEET 3	

File: 571718-2.dwg
Path: K:\RH-TRU Distillation\Drawings\DRF-341590
Date: 03/19/14 - 8:39 AM
Layout Name: Sheet 3
ID: MXJ

FMT-D1-REV 2014-01-29

REVISIONS	
REV	DESCRIPTION
1	INCORPORATED FDC-9610; SHEET 2 REMOVED; REVISED TITLE BLOCK; AS-BUILT AS OF 3/18/2014, SUBMITTAL TO STATE FOR RCRA PERMIT, SEE DRF-341590

NOTES:

1. REMOVE ALL BURRS AND SHARP EDGES.
2. (Q) FINAL ASSEMBLY SHALL MEET CLEANLINESS REQUIREMENT OF STD-7022, LEVEL D.

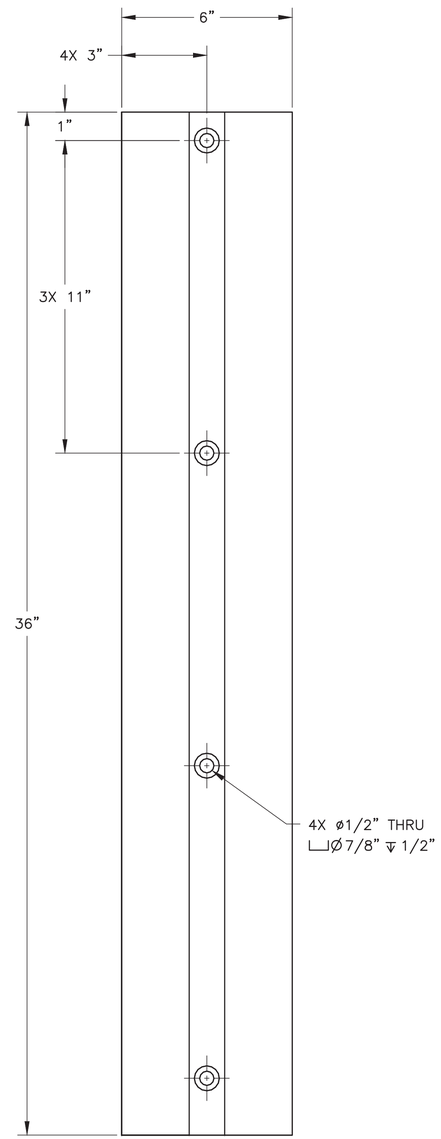

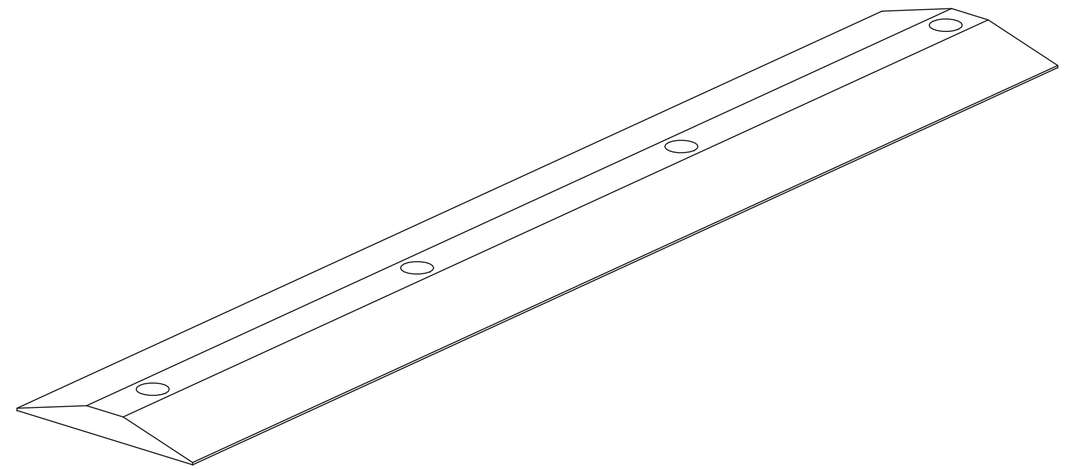

3D VIEW
(SHOWN FOR CLARITY)
SCALE: NONE

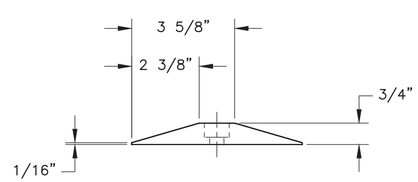

(0) DETAIL
SCALE: 3/8

Eric Decker
PORTAL
2014.03.20 13:45:53 -06'00'

PROFESSIONAL ENGINEER LICENSED 13561 STATE OF IDAHO ERIC DECKER

I CERTIFY THAT THIS DRAWING REFLECTS THE CURRENT CONSTRUCTED CONDITION AS OF 3/18/2014

INSPECTION REQUIREMENTS
QC REQUIRED
(Q) DENOTES Q/C INSP. REQD.

DASH NO.	NEXT ASSY
-0	571718

APPLICATION

QTY REQD	QUAL LEVEL	PART OR IDENTIFYING NO.	NOMENCLATURE OR DESCRIPTION	MATERIAL/SPECIFICATION OR VENDOR NAME	ITEM NO.
	3	-0	THRESHOLD	BAR 304 OR 304L SST ASTM A276	0

PARTS LIST

DIMENSIONING AND SYMBOLOGY PER ASME Y14.5-2009 AND STD-11
UNLESS OTHERWISE SPECIFIED
SURFACE ROUGHNESS 125√
DIMENSIONS AND TOLERANCES ARE IN INCHES
TOLERANCES: .X = ± .1
DECIMALS: .XX = ± .03, .XXX = ± .010
FRACTIONS ± 1/8
ANGULAR ± 2°
DO NOT SCALE DRAWING

SIGNATURES/DATES APPLY TO CURRENT RELEASE ONLY	SIGN AND DATE
DESIGN: NA	– –
DRAFTER: C. WRIDE	Caid Wride CWI 2014.03.19 14:12:34 -06'00'
TECHNICAL CHECK: NA	– –
ENG GROUP SUPERVISOR: NA	– –
DESIGN LEAD/AUTHORITY: D. MORGAN	David Morgan CWI 2014.03.20 08:38:53 -06'00'
DRAFTING CHECK/ EFFECTIVE DATE: K. KELLER	Kris Keller CWI 2014.03.20 14:02:46 -06'00'
PROJECT NUMBER: 31720	
DRF NUMBER: 341311	

Idaho Cleanup Project — CH2M·WG IDAHO, LLC

INTEC CPP-666
RH-TRU DISTILLATION SYSTEM
DNI ROOM SECONDARY CONTAINMENT

THRESHOLD

SIZE	INDEX CODE NUMBER				DWG-	REV
	AREA	TYPE	CL.	ORIG.		
D	200	0666	62	136	571518	1

SCALE: NONE — SHEET 1 OF 1

File: 571518-1.dwg
Path: K:\RH-TRU Distillation\Drawings\DRF-341590
Date: 03/19/14 – 11:11 AM | Layout Name: Sheet 1 of 1 | ID: MXJ

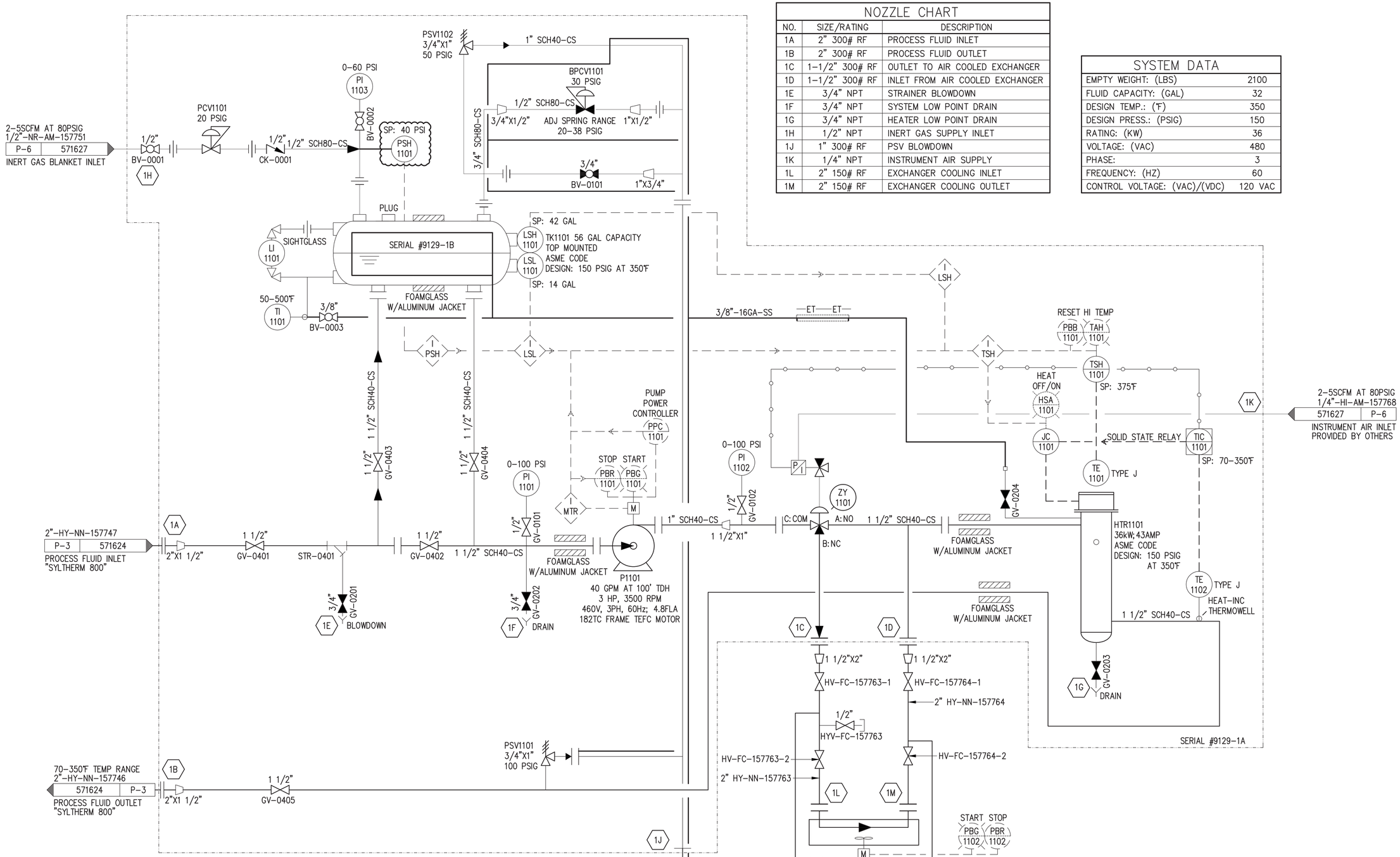

NOZZLE CHART

NO.	SIZE/RATING	DESCRIPTION
1A	2" 300# RF	PROCESS FLUID INLET
1B	2" 300# RF	PROCESS FLUID OUTLET
1C	1–1/2" 300# RF	OUTLET TO AIR COOLED EXCHANGER
1D	1–1/2" 300# RF	INLET FROM AIR COOLED EXCHANGER
1E	3/4" NPT	STRAINER BLOWDOWN
1F	3/4" NPT	SYSTEM LOW POINT DRAIN
1G	3/4" NPT	HEATER LOW POINT DRAIN
1H	1/2" NPT	INERT GAS SUPPLY INLET
1J	1" 300# RF	PSV BLOWDOWN
1K	1/4" NPT	INSTRUMENT AIR SUPPLY
1L	2" 150# RF	EXCHANGER COOLING INLET
1M	2" 150# RF	EXCHANGER COOLING OUTLET

SYSTEM DATA

EMPTY WEIGHT: (LBS)	2100
FLUID CAPACITY: (GAL)	32
DESIGN TEMP.: (°F)	350
DESIGN PRESS.: (PSIG)	150
RATING: (KW)	36
VOLTAGE: (VAC)	480
PHASE:	3
FREQUENCY: (HZ)	60
CONTROL VOLTAGE: (VAC)/(VDC)	120 VAC

GENERAL NOTES

1. DELETED
2. SKID MOUNTED NEMA 4 CONTROL CENTER.
3. POWER SUP: 480V, 3PH, 60HZ, 100AMP SERVICE.
4. HEATER MOUNTED IN A VERTICAL POSITION.
5. CELLULAR FOAMGLASS INSULATION WITH ALUMINUM JACKET.
6. HEAT TRANSFER FLUID: SYLTHERM 800.
7. SYSTEM RUN TESTED WITH PURCHASED FLUID (SYLTHERM 800).
8. PAINT AND SURFACE PREPARATION TO BE IN ACCORDANCE W/HEAT INC. CORPORATE SPECIFICATIONS; "HEAT GREEEN" COLOR.
9. REMOTE MOUNTED AIR COOLED HEAT EXCHANGER SHIPPED LOOSE.

REVISION HISTORY

REV	DESCRIPTION
1	REVISED FOR WORK ORDER
–	RELEASED BY ICP, SEE DRF–338458
2	REVISED TITLE BLOCK, INCORP'D FDC–9067, 9347, 9470,
	AS–BUILT AS OF 1/28/2014, SEE DRF–341124
3	AS–BUILT AS OF 3/24/2014, SUBMITTAL TO STATE FOR RCRA
	PERMIT, SEE DRF–341665
4	AS–BUILT AS OF 2/02/2016, INCORP'D FDC–8923, SEE DRF–347765

Idaho Cleanup Project CH2M-WG IDAHO, LLC

INTEC–666

RH–TRU SODIUM DISTILLATION SYSTEM INSTALLATION

THERMAL FLUID SKID P&ID

SIGNATURES/DATES APPLY TO CURRENT RELEASE ONLY

	SIGN AND DATE
DESIGN: NA	– –
DRAFTER: J. MONCUR	Angela L Key, Nuclear Technology, 2016.02.10 15:08:51 -07'00'
TECHNICAL CHECK: NA	– –
ENG GROUP SUPERVISOR: NA	– –
DESIGN LEAD/AUTHORITY: D. MORGAN	David Morgan, CWI, 2016.02.11 09:31:26 -07'00'
DRAFTING CHECK/ EFFECTIVE DATE: K. KELLER	Kris Keller, CWI, 2016.02.11 10:37:05 -07'00'

NO SCALE

DESIGN PHASE:	
QUALITY LEVEL:	3
HORIZONTAL SCALE	NONE
VERTICAL SCALE	NA

FOR DRAWING INDEX SEE DRAWING NO. 571425

PROJECT NUMBER: 31720

INDEX CODE NUMBER			
AREA	TYPE	CL	ORIG
200	0666	24	136

SIZE D DWG– 571623 REV 4

DRF NO. 33458 SHEET P–7

FMT–DV–REV 2014–01–29

File: 571623–4.dwg Path: K:\RH–TRU Distillation\Drawing\ Date: 02/10/16 – 11:27 AM Layout Name: 571623 ID: KEYAL

INV: FMT-D1-REV 2014-01-29

REVISIONS	
REV	DESCRIPTION
1	REVISED TITLE BLOCK, ADDED INDEX CODE, AND ADDED DRAIN BOTTLE SEE DRF-347065

NOTES:

1. ARS-3 BOX CONTRUCTION MATERIALS LEXAN MR10 AND STAINLESS STEEL PAN.
2. THE CONTAINMENT PAN MUST BE PLUGGED ANYTIME WATER IS USED IN THE ARS AT DRAIN PORT USING EXPANSION PLUG.
3. THE ARS DRAIN BOTTLE WILL BE INSTALLED FOR WASTE STREAMS HAVING CRITICALITY SAFETY CONTROLS.
4. SECONDARY SST CONTAINMENT PAN CAPACITY = 12.6 U.S. GALLONS (2,913.38 CUBIC INCHES). ARS-3 BOX VOLUME = 201.7 U.S. GALLONS (46,614.08 CUBIC INCHES).

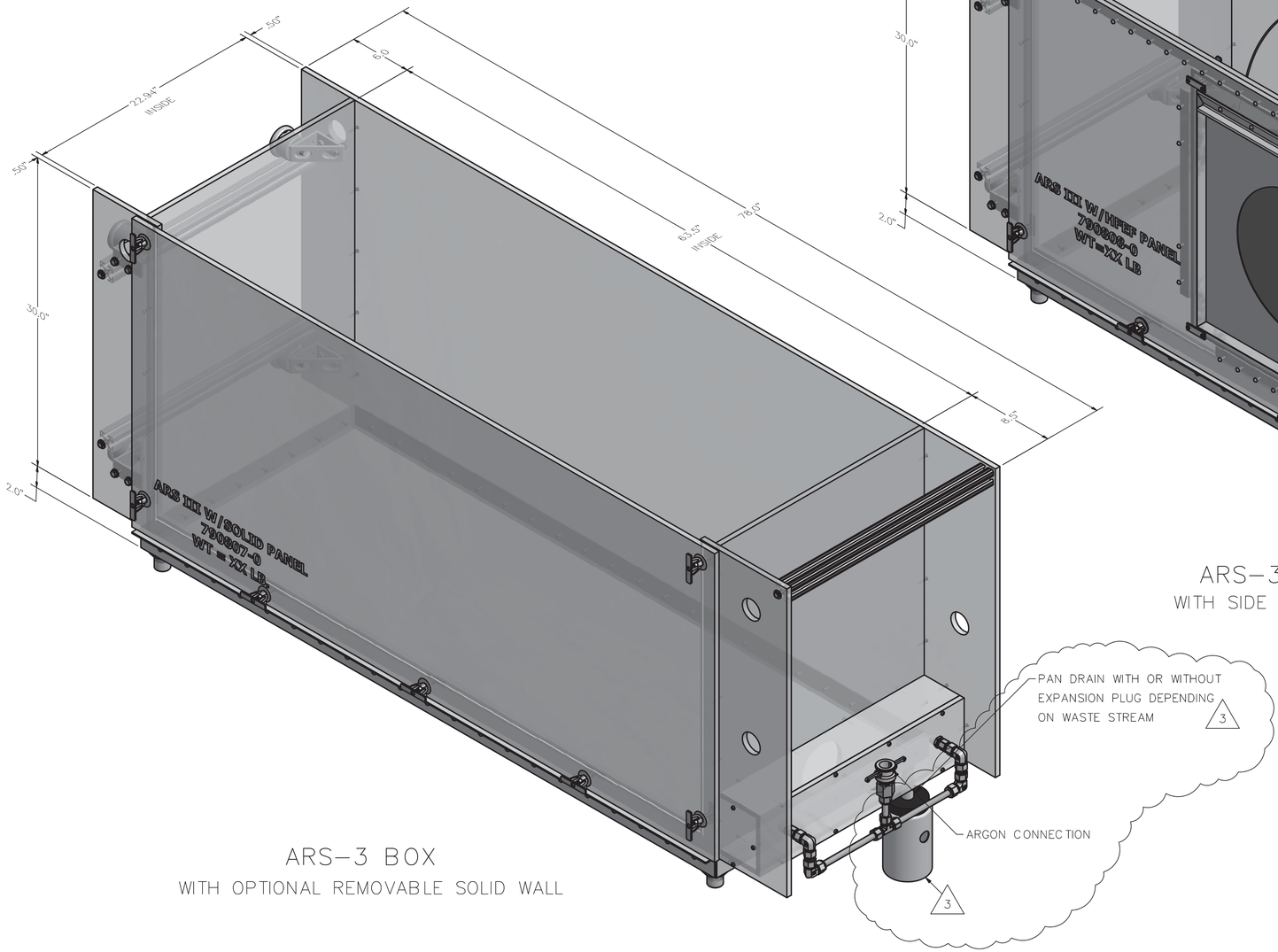

ARS-3 BOX
WITH OPTIONAL REMOVABLE SOLID WALL

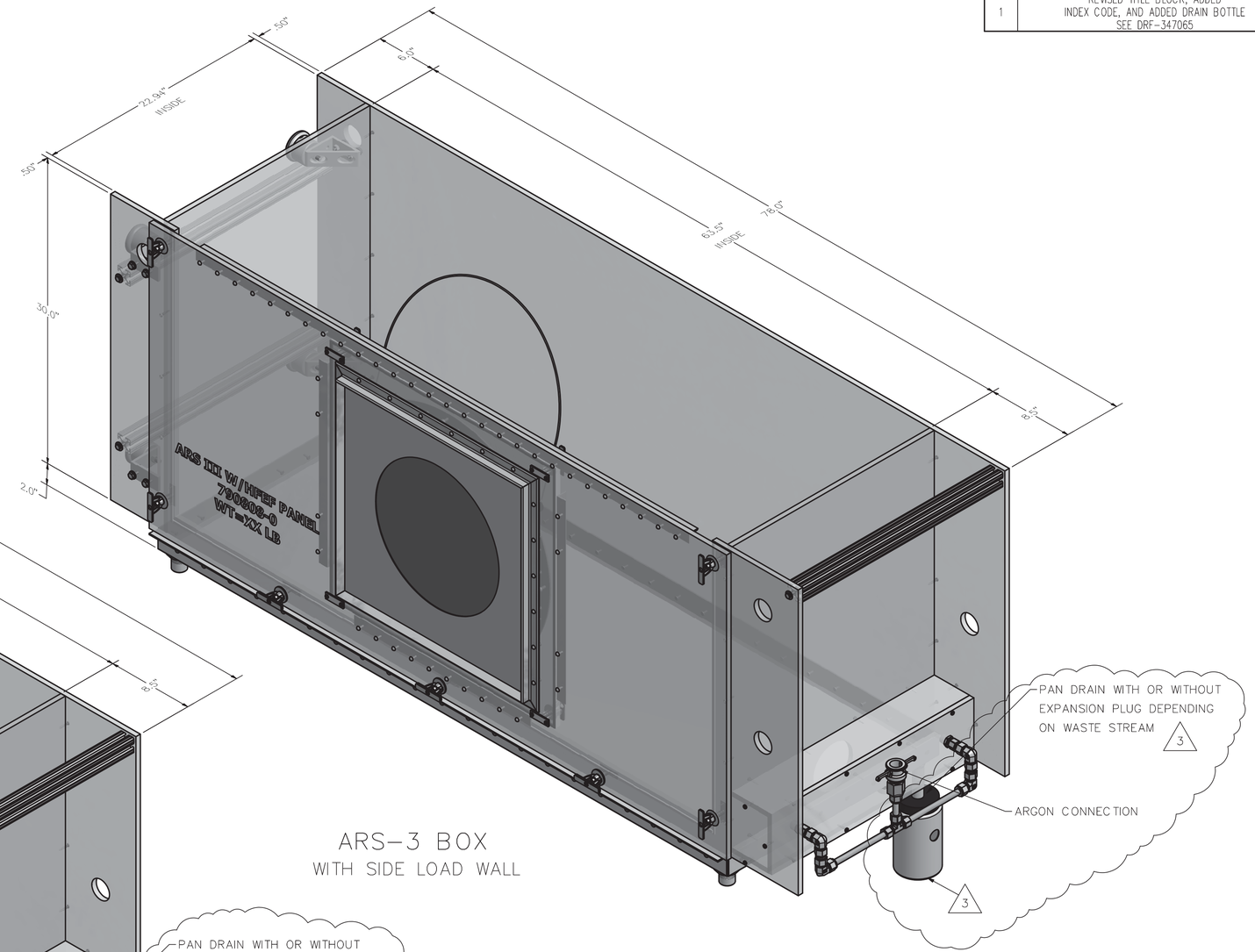

ARS-3 BOX
WITH SIDE LOAD WALL

PROFESSIONAL ENGINEER REGISTERED 4307 STATE OF IDAHO RANDY EASTMAN

DASH NO.	NEXT ASSY
-0	790808
-0	790807

APPLICATION

INDEX CODE NUMBER			
AREA	TYPE	CL	ORIG.
200	0666	41	136

SIGNATURES/DATES APPLY TO CURRENT RELEASE ONLY	SIGN AND DATE
DESIGN: K. KRIVANEK	Kenneth R. Krivanek North Wind Inc. 2015.11.12 15:32:49 -07'00'
DRAFTER: O. MORGAN	T.J. Romriell Hukari 2015.11.12 11:01:35 -07'00'
TECHNICAL CHECK: T. JORGENSEN	Travis Jorgensen North Wind Inc. 2015.11.12 15:01:19 -07'00'
ENG GROUP SUPERVISOR: R. EASTMAN P.E.	Randy Eastman CWI 2015.11.12 14:40:14 -07'00'
DESIGN LEAD/AUTHORITY: D. MORGAN	David Morgan CWI 2015.11.12 13:36:18 -07'00'
DRAFTING CHECK/ EFFECTIVE DATE: K. KELLER	Kris Keller CWI 2015.11.12 15:36:31 -07'00'
PROJECT NUMBER: 31720	
DRF NUMBER: 344992	

Idaho Cleanup Project CH2M•WG IDAHO, LLC

INTEC CPP-659/666
ARGON REPACKAGING STATION ARS 3
ARS 3 CONFIGURATIONS

SIZE	INDEX CODE NUMBER				DWG-	REV
	AREA	TYPE	CL	ORIG		
D	200	0659	41	136	790816	1

SCALE: NOTED | FS | SHEET 1 OF 1

ID: pennmr
Layout Name: 790816-790816.dwg
File: 790816.dwg
Path: V:_Vault\Designs\INTEC\MISC\INTEC_Misc_Drafting\790816\

FMT-D1-REV 2014-01-29

REVISIONS	
REV	DESCRIPTION
1	RELOCATED CONDENSER/COLLECTION VESSEL AND PIPING SEE DRF-344903
2	INCORP'D FDC-10409, 10453, 10474, AND 10529, SEE DRF-346066

NOTES:

1. REMOVE ALL BURRS AND SHARP EDGES.
2. ALL MACHINED FILLET RADII .03 MAXIMUM UNLESS OTHERWISE NOTED.
3. USE THREAD LUBRICANT (ITEM 21) ON ALL BOLT THREADS.
4. Q FINAL ASSEMBLY SHALL BE FREE OF DIRT, CHIPS, WELDING FLUX, SLAG, SCALE, OIL, GREASE, ETC. PERFORM A VISUAL INSPECTION OF THE FINAL ASSEMBLY PER ASTM A380, PARA 7.2.1.
5. Q REMOVED
6. DESIGN PRESSURE = FULL VACUUM TO 15 PSIG.
7. Q REMOVED.
8. WELDING SHALL BE PERFORMED IN ACCORDANCE WITH ASME B&PV CODE SECTION IX. WELD PER INL WELD PROCEDURE SPECIFICATION S2.0 USING ITEM 20.
9. Q PERFORM VISUAL EXAMINATION OF THE FINAL PASS OF ALL WELDS IN ACCORDANCE WITH ASME B31.3, PARAGRAPH 344.2, WITH ACCEPTANCE CRITERIA IN ACCORDANCE WITH TABLE 341.3.2 FOR NORMAL FLUID SERVICE.
10. PERFORM IN-PROCESS INSPECTION OF WELDS WHERE SPECFIED PER ASME B31.1, PARAGRAPH 344.7 USING LIQUID PENETRANT EXAMINATION OF THE ROOT AND FINAL PASS.
11. Q LIQUID PENETRANT EXAMINATION FOR THE ROOT AND FINAL PASS OF BUTT-WELDS AND FINAL PASS OF FILLET WELDS SHALL BE PERFORMED IN ACCORDANCE WITH ASME B31.3, PARAGRAPH 344.4 WITH ACCEPTANCE CRITERIA IN ACCORDANCE WITH TABLE 341.3.2 FOR NORMAL FLUID SERVICE.
12. REMOVED.
13. FOR SODIUM DISTILLATE ENCLOSURE SEE DRAWINGS 779875 THROUGH 779894 AND 780219 THROUGH 780223.
14. LOCATION OF EQUIPMENT MAY BE ADJUSTED AS NECESSARY.
15. DESIGN TEMPERATURE = SEE SUBASSEMBLIES.
16. Q COMPLETED ASSEMBLY SHALL UNDERGO A PNEUMATIC LEAK TEST IN ACCORDANCE WITH ASME B31.3 USING A DIRECT PRESSURE BUBBLE TEST TECHNIQUE, PERFORM TEST AT A PRESSURE OF 14.5 TO 15.0 PSIG. "SNOOP" ALL CONNECTIONS & WELDED JOINTS FOR LEAKS.
17. EXISTING EQUIPMENT SHOWN AS LIGHT GRAY.
18. THIS DRAWING WAS GENERATED FROM DRAWING 571692.
19. Q TORQUE BOLTS ON GRAYLOK CLAMP TO 55 (+5.5/-0) FT-LB.
20. Q TORQUE BOLTS ON 2-3/4" OD CF FLANGES TO 12 (+1/-0) FT. LB.
21. PERFORM IN-PROCESS INSPECTION OF WELDS WHERE SPECIFIED PER ASME B31.3, PARAGRAPH 344.7 USING LIQUID PENETRANT EXAMINATION OF THE ROOT AND FINAL PASS OF BUTT-WELDS AND FINAL PASS OF FILLET WELDS

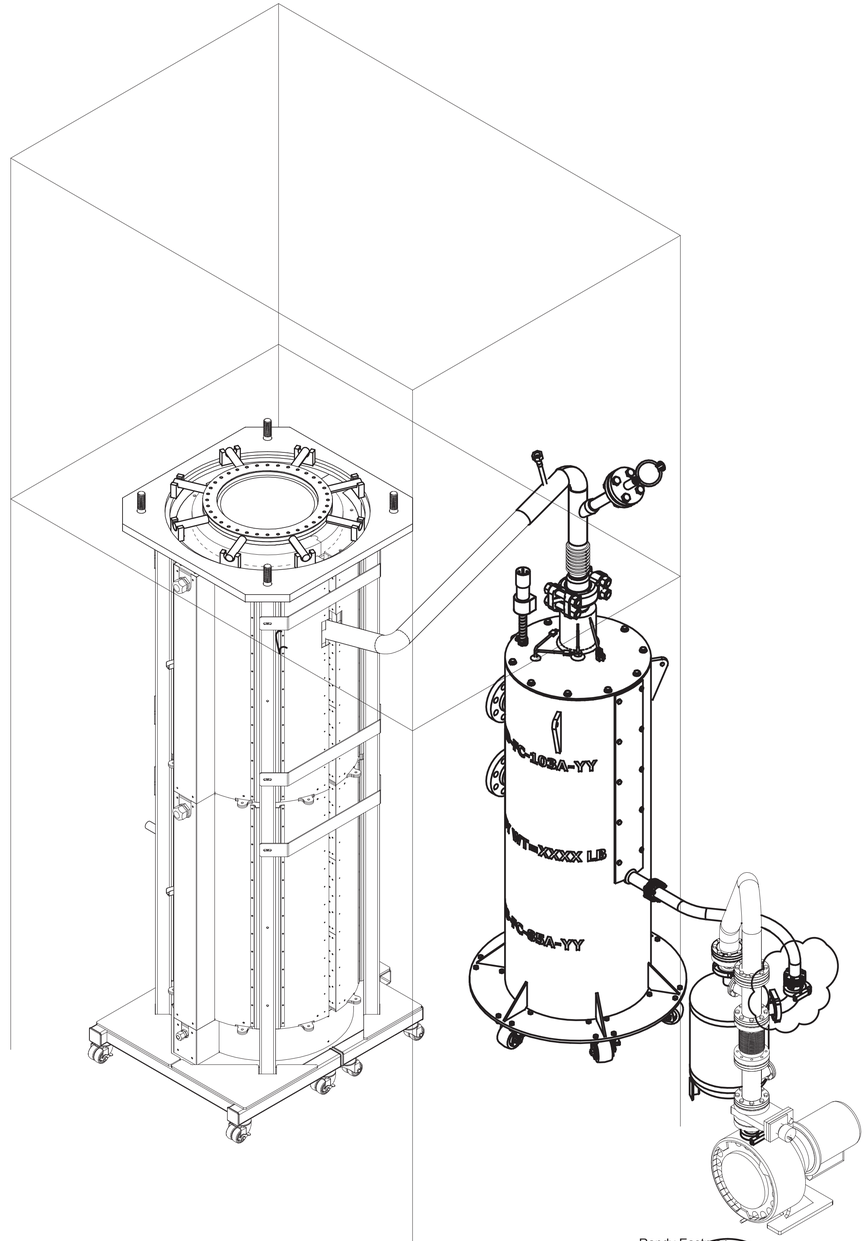

3D VIEW
(SHOWN FOR CLARITY)
SCALE: NONE

QTY REQD	QUAL LEVEL	PART OR IDENTIFYING NO.	NOMENCLATURE OR DESCRIPTION	MATERIAL/SPECIFICATION OR VENDOR NAME	ITEM NO.
	1	3	H90243-38WB-1	CLAMP, 2 PIECE	GRAYLOC	25
	1	3	H90174-18	SEAL RING, 20, HIGH STRENGTH	GRAYLOC	24
	1	3	HBS-25028138	BOLT, HEX HEAD/NUT SETS 1/4-28UNF	KURT J. LESKER COMPANY	23
	3	3	GA-0275NSP	GASKET, FOR 2 3/4" OD CF FLANGE, SILVER PLATED COPPER	KURT J. LESKER COMPANY	22
	AR	3	77124	NICKEL ANTI-SEIZE THREAD LUBRICANT	LOCTITE CORP.	21
	AR	3		WELD FILLER METAL	ER308H AWS A5.9	20
	4	3	QF40-150-OPR	OVER-PRESSURE RING KF-40	KURT J LESKER	19
	1	3	F0275XQF40	CF TO KF FLANGE ADAPTER 2.75" CF FLANGE TO KF40 FLANGE	KURT J. LESKER COMPANY	18
						17
	1	3	QF40-150-E90	ELBOW, KF-40 90° FLANGED	KURT J. LESKER COMPANY	16
						15
	1	3	MHB-CF-C30	HYDRAULICALLY FORMED BELLOWS SST, FLANGED BELLOWS, 24" LONG	KURT J. LESKER COMPANY	14
	1	3	788579	SPOOL PIECE 8		13
						12
						11
	4	3	QF40-150-CS	MACHINED CLAMP FOR KF40 FLANGE	KURT J. LESKER	10
	4	3	QF40-150-SRB	CENTERING RING W/ BUNA-N O-RING FOR KF40 FLANGE	KURT J. LESKER	9
						8
	1	3	785276-0	COLD TRAP FILTER		7
						6
						5
						4
	1		786868-0	CONDENSER / COLLECTION VESSEL		3
						2
		3	-1	ASSEMBLY		1

PARTS LIST

Randy Eastman
CWI
2015.08.05 15:18:50 -06'00'

PROFESSIONAL ENGINEER REGISTERED 4307 STATE OF IDAHO RANDY EASTMAN

I CERTIFY THE CHANGES SHOWN ON THIS DRAWING REFLECT THE CURRENT CONSTRUCTED CONDITION AS OF 07/15/2015

INSPECTION REQUIREMENTS	DASH NO.	NEXT ASSY
QC REQUIRED	-1	FINAL
Q DENOTES Q/C INSP. REQD.	APPLICATION	

DIMENSIONING AND SYMBOLOGY PER ASME Y14.5-2009 AND STD-11 UNLESS OTHERWISE SPECIFIED
SURFACE ROUGHNESS 125√
DIMENSIONS AND TOLERANCES ARE IN INCHES
TOLERANCES: .X = ± .1
DECIMALS: .XX = ± .03, .XXX = ± .010
FRACTIONS ± 1/8
ANGULAR ± 2°
DO NOT SCALE DRAWING

SIGNATURES/DATES APPLY TO CURRENT RELEASE ONLY	SIGN AND DATE
DESIGN: R. CAMPBLELL	Rodney C. Campbell HukariAscendent 2015.08.05 14:47:25 -06'00'
DRAFTER: A. KEY	Angela L Key Nuclear Technology 2015.08.05 15:02:25 -06'00'
TECHNICAL CHECK: T. BURNETT P.E.	Troy P. Burnett Walsh Engineering 2015.08.05 15:13:18 -06'00'
ENG GROUP SUPERVISOR: R. EASTMAN P. E.	Randy Eastman CWI 2015.08.05 15:18:49 -06'00'
DESIGN LEAD/AUTHORITY: D. MORGAN	David Morgan CWI 2015.08.05 14:52:32 -06'00'
DRAFTING CHECK/ EFFECTIVE DATE: S. BERTHELSON	Shawn Berthelson CWI 2015.08.05 17:23:12 -06'00'
PROJECT NUMBER: 31720	
DRF NUMBER: 343941	

Idaho Cleanup Project CH2M•WG IDAHO, LLC

CPP-666

RH-TRU SODIUM DISTILLATION SYSTEM
DISTILLATION SYSTEM
ASSEMBLY MODIFICATION

SIZE	INDEX CODE NUMBER AREA	TYPE	CL.	ORIG.	DWG-	REV
D	200	0666	53	136	571515	2

SCALE: NOTED
SHEET 1 OF 5

ID: KEYAL
Layout Name: Sheet 1
Date: 08/05/15 - 9:42 AM
File: 571515-2.dwg
Path: K:\RH-TRU Distillation\Drawings\DRF-346066

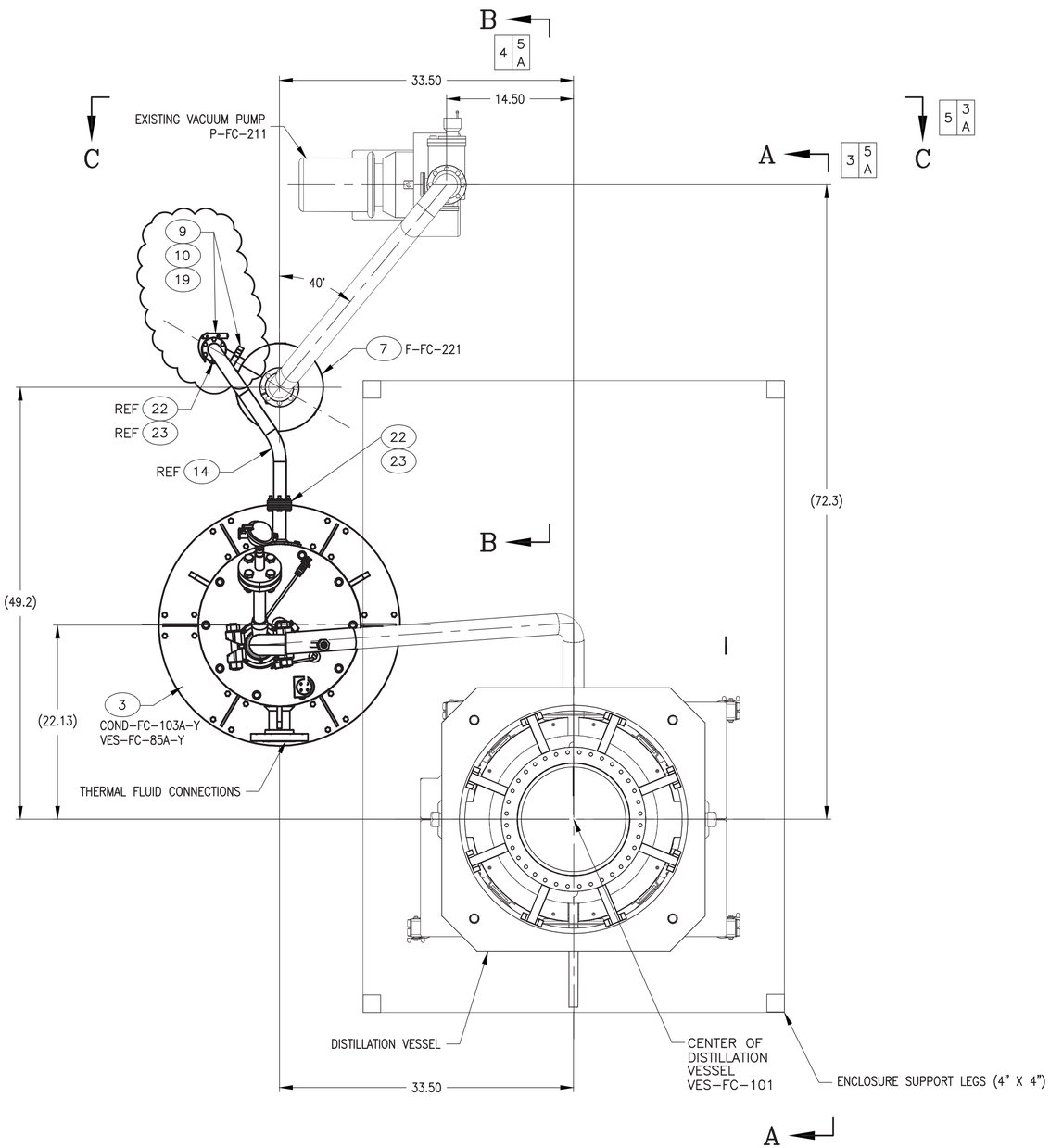

-1 ASSEMBLY 14

SCALE: 1/8

SIZE	INDEX CODE NUMBER						REV
	AREA	TYPE	CL	ORIG			
D	200	0666	53	136	DWG-	571515	2
SCALE: NOTED						SHEET 2	

FMT-D2-REV 2014-01-29

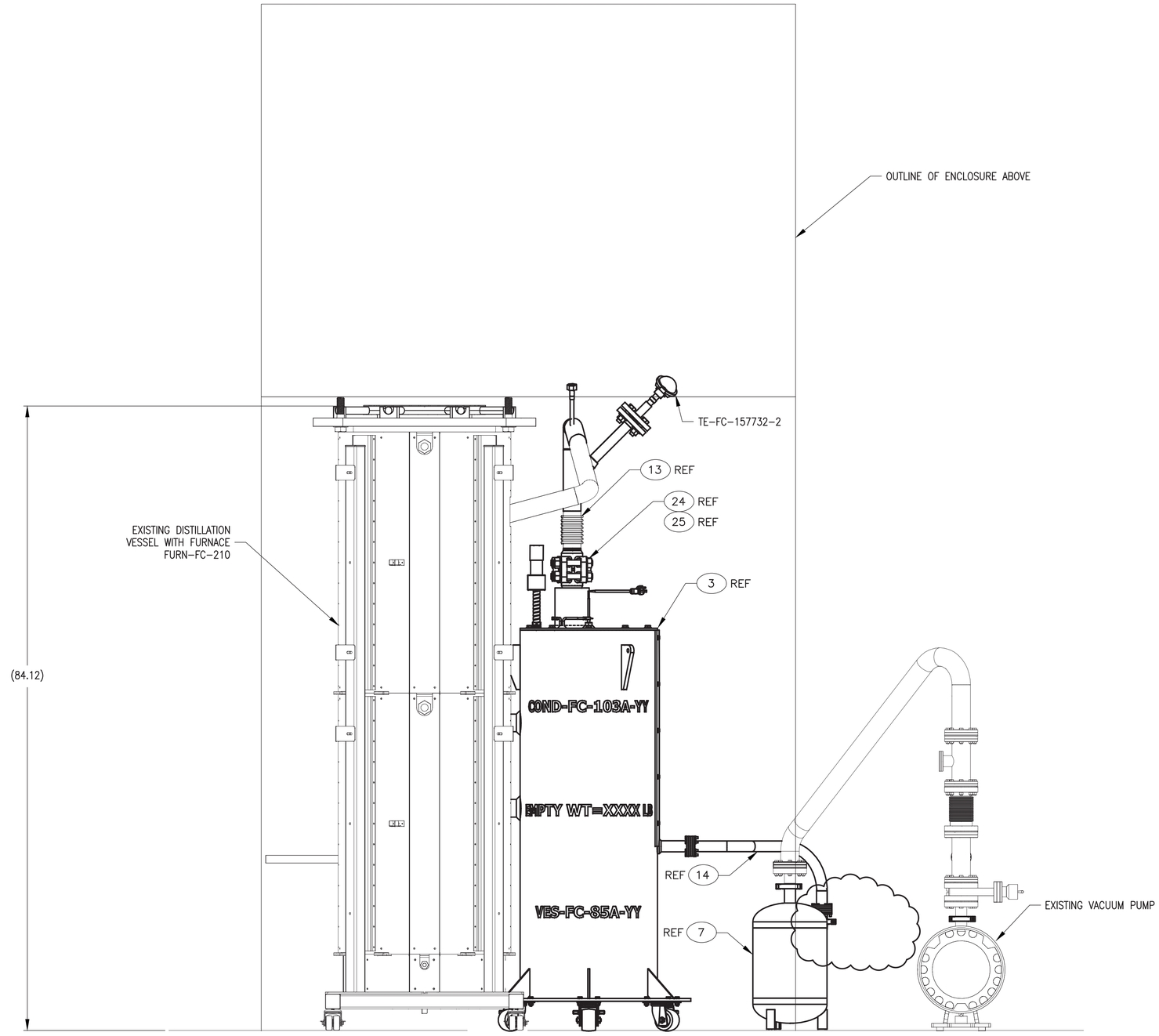

VIEW A–A 15
SCALE: 1/8

SIZE	INDEX CODE NUMBER						REV
	AREA	TYPE	CL	ORIG			
D	200	0666	53	136	DWG–	571515	2
SCALE: NOTED						SHEET 3	

File: 571515-2.dwg
Path: K:\RH-TRU Distillation\Drawings\DRF-346066
Date: 08/05/15 – 9:42 AM | Layout Name: Sheet 3 | ID: KEYAL

FMT-D2-REV 2014-01-29

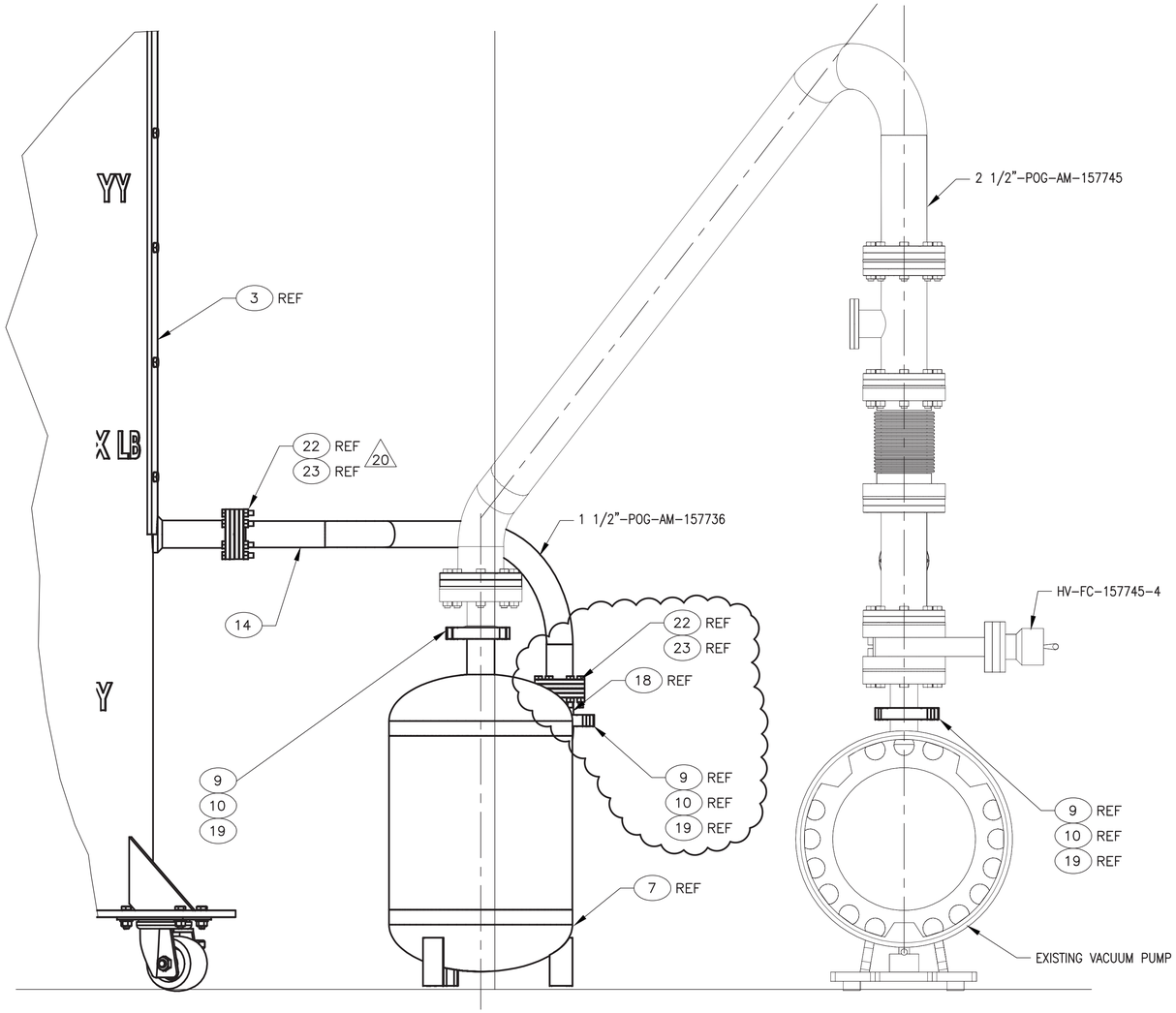

VIEW B–B

SCALE: 1/4

SIZE	INDEX CODE NUMBER						REV
	AREA	TYPE	CL	ORIG			
D	200	0666	53	136	DWG–	571515	2
SCALE: NOTED						SHEET 4	

File: 571515-2.dwg
Path: K:\RH-TRU Distillation\Drawings\DRF-346066
Date: 08/05/15 - 9:42 AM
Layout Name: Sheet 4
ID: KEYAL

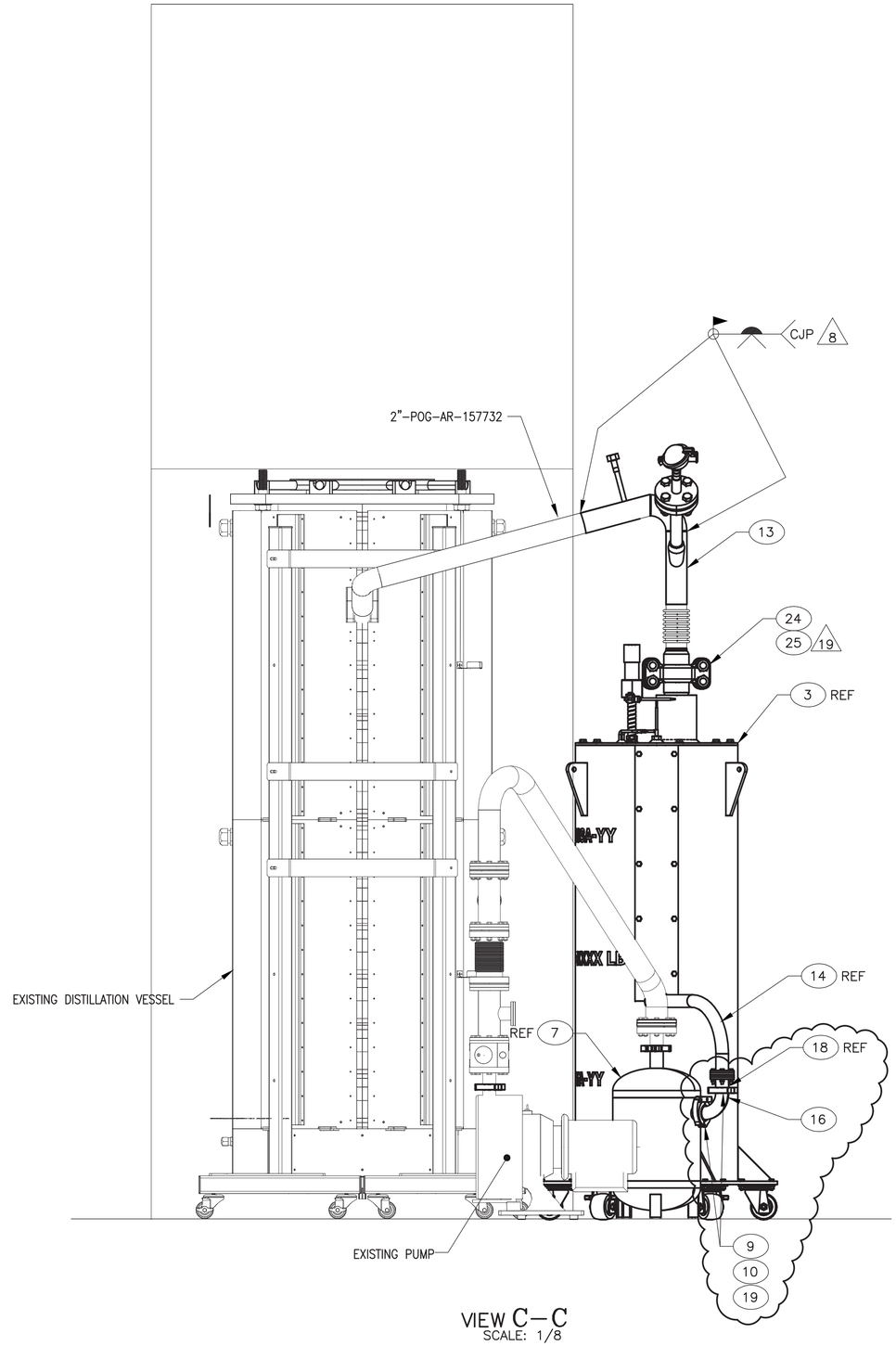

VIEW C-C
SCALE: 1/8

SIZE	INDEX CODE NUMBER				DWG-	571515	REV
	AREA	TYPE	CL	ORIG			
D	200	0666	53	136			2
SCALE: NOTED						SHEET 5	

FMT-D1-REV 2014-01-29

REVISIONS	
REV	DESCRIPTION
1	SEE DRF-344903 REMOVED SHEET 2

NOTES:

1. REMOVE ALL BURRS AND SHARP EDGES.
2. ALL MACHINED FILLET RADII .03 MAXIMUM UNLESS OTHERWISE NOTED.
3. DRAWING IS GENERATED FROM DRAWING 571696.

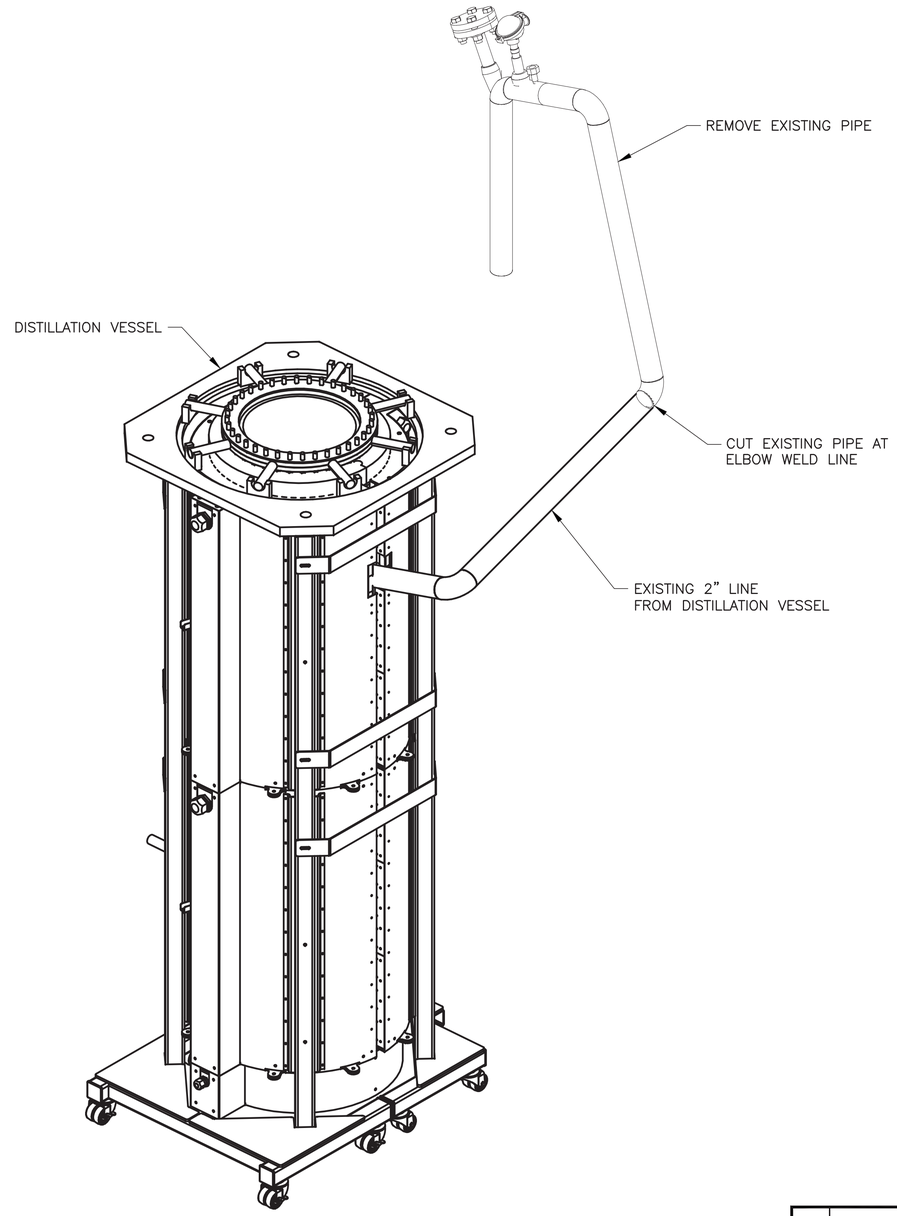

3D VIEW
(SHOWN FOR CLARITY)
SCALE: NONE

Randy Eastman
CWI
2015.04.02 07:56:20 -06'00'

PROFESSIONAL ENGINEER REGISTERED 4307 STATE OF IDAHO RANDY EASTMAN

INSPECTION REQUIREMENTS	-0	571515
QC REQUIRED	DASH NO.	NEXT ASSY
Q DENOTES Q/C INSP. REQD.	APPLICATION	

QTY REQD	-0 QUAL LEVEL	PART OR IDENTIFYING NO.	NOMENCLATURE OR DESCRIPTION	MATERIAL/SPECIFICATION OR VENDOR NAME	ITEM NO.

PARTS LIST

DIMENSIONING AND SYMBOLOGY PER ASME Y14.5-2009 AND STD-11
UNLESS OTHERWISE SPECIFIED
SURFACE ROUGHNESS 125/√
DIMENSIONS AND TOLERANCES ARE IN INCHES
TOLERANCES: .X = ± .1
DECIMALS: ~~.XX = ± .03~~ ~~.XXX = ± .010~~
FRACTIONS ± 1/8
ANGULAR ± 2°
DO NOT SCALE DRAWING

SIGNATURES/DATES APPLY TO CURRENT RELEASE ONLY	SIGN AND DATE
DESIGN: R. CAMPBELL	Rodney C. Campbell HukariAscendent 2015.04.01 15:56:03 -06'00'
DRAFTER: O. MORGAN	DIRIN MORGAN URS 2015.04.01 14:52:31 -06'00'
TECHNICAL CHECK: T. BURNETT P.E.	Troy P. Burnett Walsh Engineering 2015.04.01 15:59:53 -06'00'
ENG GROUP SUPERVISOR: R. EASTMAN P.E.	Randy Eastman CWI 2015.04.02 07:56:20 -06'00'
DESIGN LEAD/AUTHORITY: D. MORGAN	David Morgan CWI 2015.04.02 12:21:21 -06'00'
DRAFTING CHECK/ EFFECTIVE DATE: K. KELLER	Kris Keller CWI 2015.04.02 12:45:39 -06'00'
PROJECT NUMBER: 31720	
DRF NUMBER: 343941	

Idaho Cleanup Project CH2M•WG IDAHO, LLC

CPP-666

RH-TRU DISTILLATION SYSTEM

SPOOL PIECE 4 MODIFICATION

SIZE	INDEX CODE NUMBER: AREA	TYPE	CL	ORIG	DWG-	REV
D	200	0666	53	136	571517	1

SCALE: NONE SHEET 1 OF 1

File: 571517.dwg
Path: K:\RH-TRU Distillation\Drawings\Revit_RH-TRU Distillation System-AFC\collection vessel
Date: 03/25/15 - 6:58 AM Layout Name: 57169601
ID: OMORGAN

FMT-DV-REV 2014-01-29

EQUIP NO.	A	B	C	D	E	F	G	H
NAME	DISTILLATION VESSEL	CONDENSER	COLLECTION VESSEL	FILTER	VACUUM PUMP		FURNACE	KNIFE GATE
SIZE	ø12 3/4" x 6'	ø10.75" x 30"	ø10.75" x 15"	ø10" x 18"	18.56"x13.98"x11.8"		26.5" x 68.5"	66.17"x24.5"x7.38"
VOLUME	34 GALLONS	6 1/2 GALLONS	5 GALLONS	6 GALLONS	–		–	–
WEIGHT	550 LB	1,195 LB	200 LB		70 LB		–	361 LB
POWER	–	460V, 3 PH	460V, 3 PH	–	460V, 3 PH		208V, 3 PH	230V, 1 PH
HEAT INPUT	32 kW	XX kW	2 kW	–	–		–	–
RATING	–	–	–	–	17.7 SCFM		30 kW	
DESIGN TEMP	1250° F	800° F	400° F	300° F	–		1200° F	1200° F
DESIGN PRESS	±15 PSIG	150 PSIG	±15 PSIG	±15 PSIG	7 mTORR		–	±15 PSIG
WAI DATA REQ'D				–	–		–	–

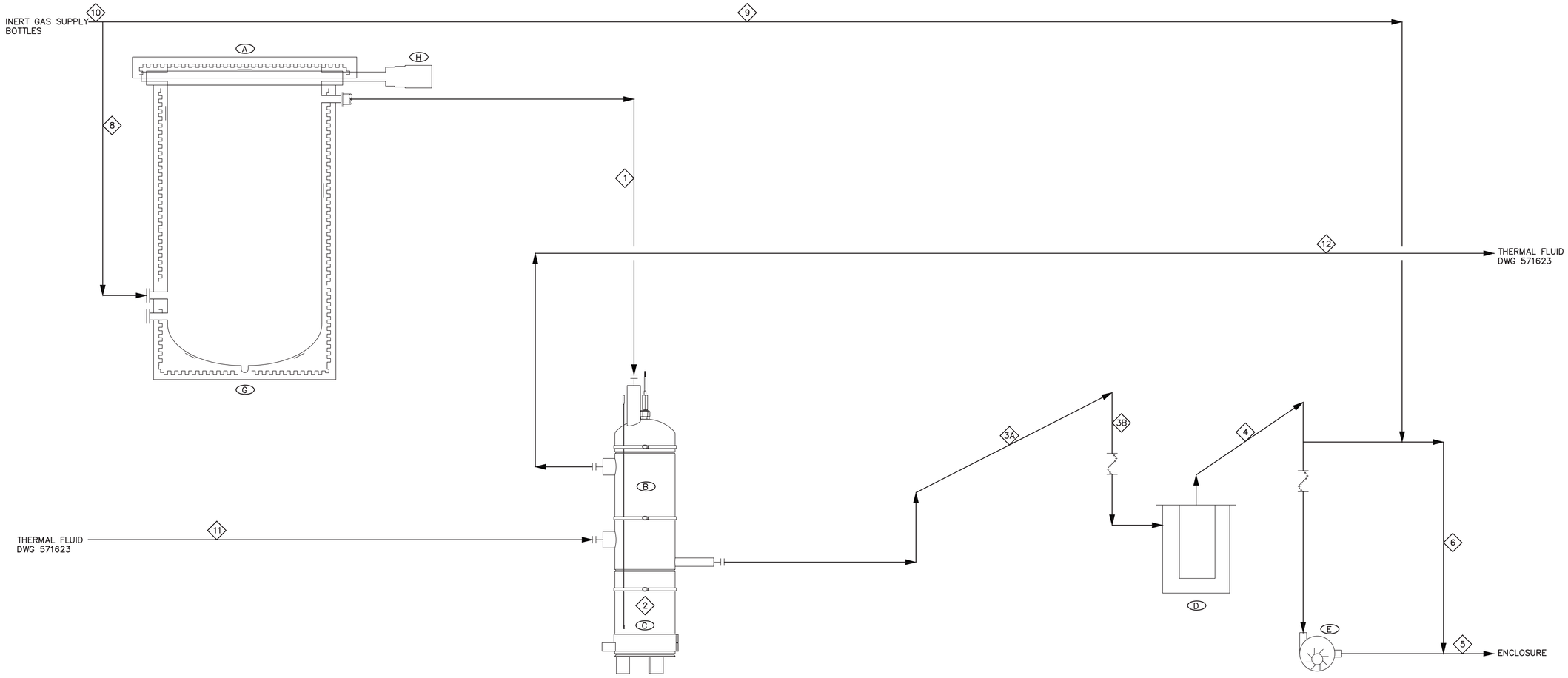

STREAM NO.		1	2	3A	3B	4	5	6	7	8	9	10	11	12
STREAM NAME		SODIUM VAPOR TO CONDENSER	SODIUM TO COLLECTION VESSEL	COLLECTION VESSEL TO FILTER	COLLECTION VESSEL TO FILTER	FILTER TO PUMP	SUSPECT EXHAUST	VACUUM PUMP BYPASS		INERT GAS PURGE TO DISTILLATION VESSEL	INERT GAS PURGE TO VACUUM LINES	TOTAL INERT GAS	THERMAL FLUID TO CONDENSER	THERMAL FLUID FROM CONDENSER
VARIABLE	UNITS	–	–	–	–	–	–	–		–	–	–	–	–
DESIGN PRESSURE	psia	0–27.4	0–27.4	0–27.4	0–27.4	0–27.4	27.4	15.4		27.4	27.4	–	165	165
DESIGN TEMPERATURE	°F	1200	400	400	300	200	200	200		–	–	–	350	350
		–	–	–	–	–								
		–	–	–	–	–								
GAS VOL. FLOW	ACFM	17.7	17.7	17.7	17.7	17.7	17.7						–	–
	SCFM	–	–	–	–	–		10		10	1–2	15		
LIQUID MASS FLOW														
LIQUID VOL. FLOW	gpm	–	–	–	–	–	–	–					40	40
SPEC. GRAVITY		–	–	–	–	–	–	–					0.93	0.93
WAI DATA REQUIRED														

NOTES

1. ATMOSPHERIC PRESSURE AT INTEC IS 12.4 PSIA.

Randy Eastman
CWI
2015.08.05 15:19:04 -06'00'

PROFESSIONAL ENGINEER REGISTERED 4307 STATE OF IDAHO RANDY EASTMAN

I CERTIFY THE CHANGES SHOWN ON THIS DRAWING REFLECT THE CURRENT CONSTRUCTED CONDITION AS OF 07/15/2015

REVISION HISTORY

REV	DESCRIPTION
1	INCORP'D FDC-10492, SEE DRF-346666

Idaho Cleanup Project CH2M-WG IDAHO, LLC

CPP–666

RH–TRU SODIUM DISTILLATION SYSTEM CONDENSER/COLLECTION VESSEL

PROCESS FLOW DIAGRAM

SIGNATURES/DATES APPLY TO CURRENT RELEASE ONLY

	SIGN AND DATE
DESIGN: R. CAMPBELL	Rodney C. Campbell Hukari/Ascendent 2015.08.05 14:47:04 -06'00'
DRAFTER: A. KEY	Angela L Key Nuclear Technology 2015.08.05 15:01:57 -06'00'
TECHNICAL CHECK: T. BURNETT, P.E.	Troy P. Burnett Walsh Engineering 2015.08.05 15:12:27 -06'00'
ENG GROUP SUPERVISOR: R. EASTMAN, P.E.	Randy Eastman CWI 2015.08.05 15:19:04 -06'00'
DESIGN LEAD/AUTHORITY: D. MORGAN	David Morgan CWI 2015.08.05 14:52:05 -06'00'
DRAFTING CHECK/ EFFECTIVE DATE: S. BERTHELSON	Shawn Berthelson CWI 2015.08.05 17:23:04 -06'00'

NO SCALE

DESIGN PHASE:	AFC
QUALITY LEVEL:	3
HORIZONTAL SCALE	NONE
VERTICAL SCALE	NA

FOR DRAWING INDEX SEE DRAWING NO. 571500

PROJECT NUMBER: 31720

INDEX CODE NUMBER			
AREA	TYPE	CL	ORIG
200	0666	24	136

SIZE D DWG– 571505 REV 1

DRF NO. 343942 SHEET PF–1

ID: KEYAL

Date: 08/05/15 – 2:05 PM Layout Name: PF

File: 571505_PF–1.dwg DRF–346666

Path: K:\RH–TRU Distillation\Drawings

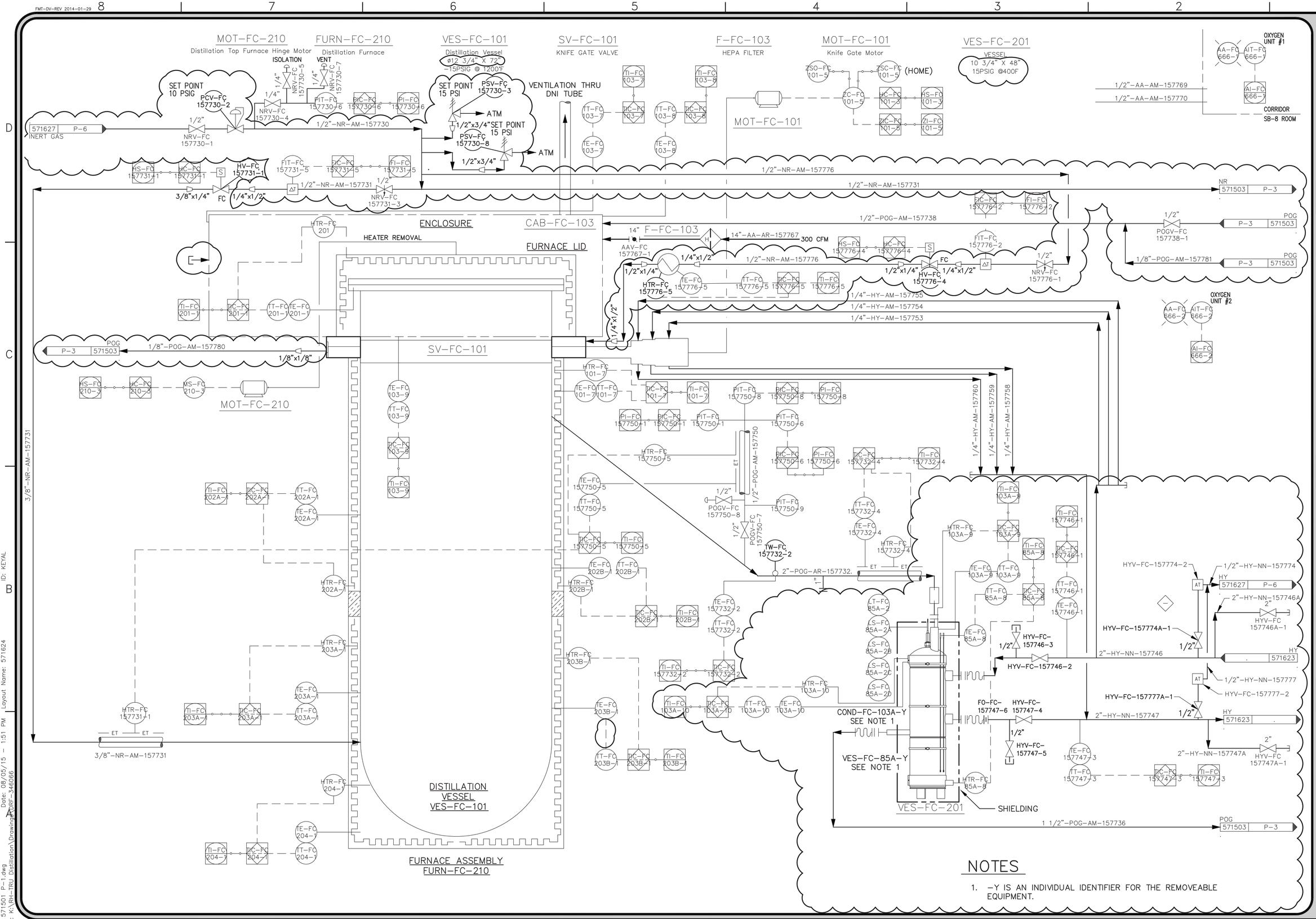

NOTES

1. -Y IS AN INDIVIDUAL IDENTIFIER FOR THE REMOVEABLE EQUIPMENT.

REVISION HISTORY

REV	DESCRIPTION
1	INC08PD FDC-10251 AND 10287, SEE DRF-344903
2	INC08PD FDC-10473, SEE DRF-346066

Idaho Cleanup Project CH2M-WG IDAHO, LLC

CPP-666

RH-TRU SODIUM DISTILLATION SYSTEM CONDENSER/COLLECTION VESSEL

DISTILLATION VESSEL AND CONDENSER PIPING AND INSTRUMENTATION DIAGRAM

SIGNATURES/DATES APPLY TO CURRENT RELEASE ONLY

	SIGN AND DATE
DESIGN: R. CAMPBELL	Rodney C. Campbell Hukari/Scendent 2015.08.05 14:46:46 -06'00'
DRAFTER: A. KEY	Angela L Key Nuclear Technology 2015.08.05 15:01:29 -06'00'
TECHNICAL CHECK: T. BURNETT, P.E.	Troy P. Burnett Walsh Engineering 2015.08.05 15:11:23 -06'00'
ENG GROUP SUPERVISOR: R. EASTMAN, P.E.	Randy Eastman CWI 2015.08.05 15:21:20 -06'00'
DESIGN LEAD/AUTHORITY: D. MORGAN	David Morgan CWI 2015.08.05 14:50:53 -06'00'
DRAFTING CHECK/ EFFECTIVE DATE: S. BERTHELSON	Shawn Berthelson CWI 2015.08.05 17:22:38 -06'00'

Randy Eastman
CWI
2015.08.05 15:23:32 -06'00'
PROFESSIONAL ENGINEER REGISTERED 4307 STATE OF IDAHO RANDY EASTMAN

I CERTIFY THE CHANGES SHOWN ON THIS DRAWING REFLECT THE CURRENT CONSTRUCTED CONDITION AS OF 07/15/2015

NO SCALE

DESIGN PHASE:	AFC
QUALITY LEVEL:	3
HORIZONTAL SCALE	NONE
VERTICAL SCALE	NA

FOR DRAWING INDEX SEE DRAWING NO. 571500

PROJECT NUMBER: 31720

INDEX CODE NUMBER			
AREA	TYPE	CL	ORIG
200	0666	24	136

SIZE D DWG- 571501 REV 2

DRF NO. 343942 SHEET P-1

FMT-DV-REV 2014-01-29

File: 571501 P-1.dwg Path: K:\RH-TRU Distillation\Drawings\ Date: 08/05/15 - 1:51 PM Layout Name: 571624 ID: KEYAL

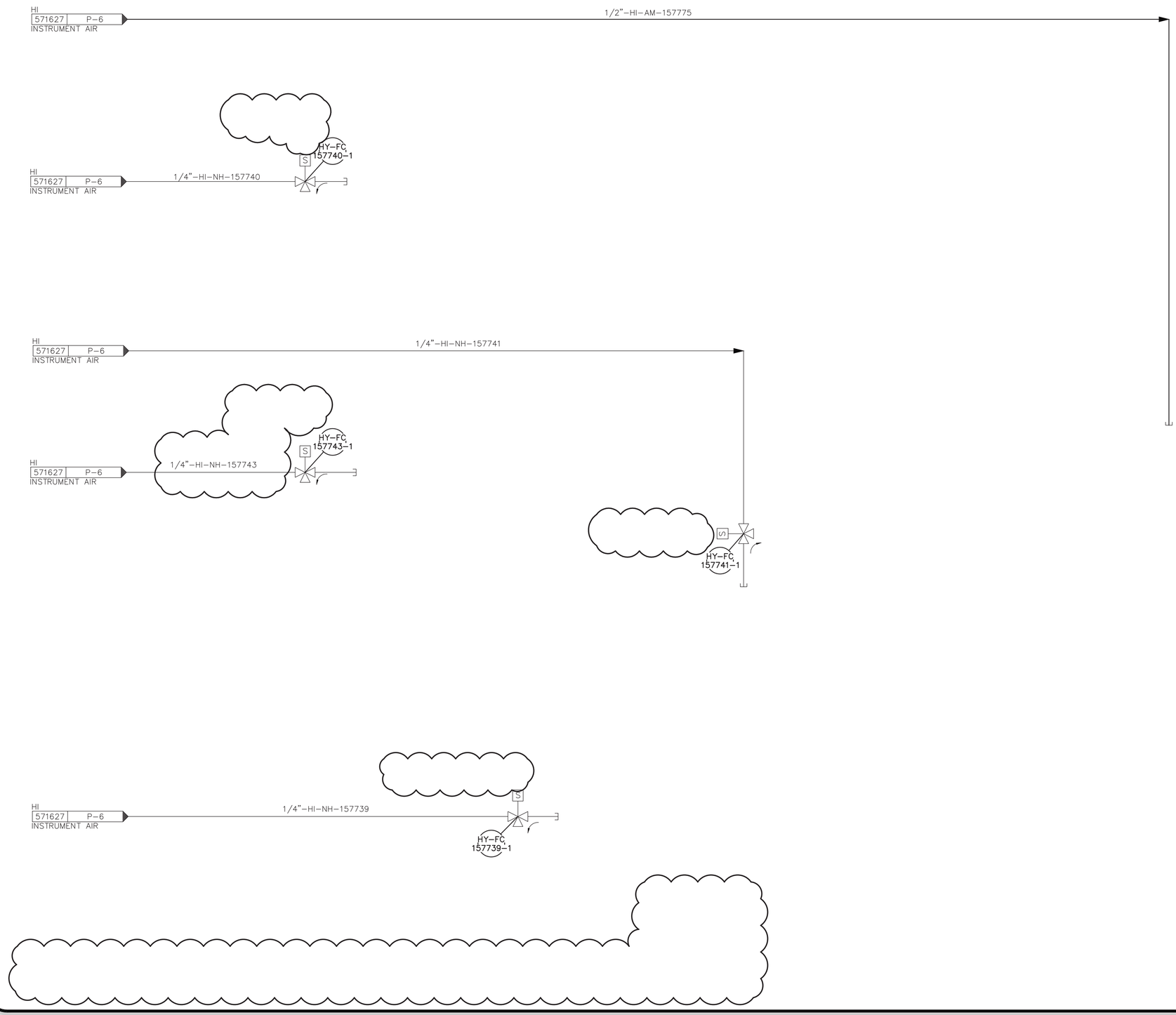

Randy Eastman
CWI
2015/08/05 15:20:15 -06'00'

PROFESSIONAL ENGINEER REGISTERED 4307 STATE OF IDAHO RANDY EASTMAN

I CERTIFY THE CHANGES SHOWN ON THIS DRAWING REFLECT THE CURRENT CONSTRUCTED CONDITION AS OF 07/15/2015

REVISION HISTORY

REV	DESCRIPTION
1	INCORP'D FDC-10473, SEE DRF-346666

Idaho Cleanup Project CH2M-WG IDAHO, LLC

CPP-666

RH-TRU SODIUM DISTILLATION SYSTEM
CONDENSER/COLLECTION VESSEL

TRANSFER VESSEL AND COLLECTION VESSEL
PIPING AND INSTRUMENTATION DIAGRAM

SIGNATURES/DATES APPLY TO CURRENT RELEASE ONLY

	SIGN AND DATE
DESIGN: R. CAMPBELL	Rodney C. Campbell HukariAscendent 2015.08.05 14:46:04 -06'00'
DRAFTER: A. KEY	Angela L Key Nuclear Technology 2015.08.05 15:01:37 -06'00'
TECHNICAL CHECK: T. BURNETT, P.E.	Troy P. Burnett Walsh Engineering 2015.08.05 15:11:45 -06'00'
ENG GROUP SUPERVISOR: R. EASTMAN, P.E.	Randy Eastman CWI 2015.08.05 15:20:15 -06'00'
DESIGN LEAD/AUTHORITY: D. MORGAN	David Morgan CWI 2015.08.05 14:51:17 -06'00'
DRAFTING CHECK/ EFFECTIVE DATE: S. BERTHELSON	Shawn Berthelson CWI 2015.08.05 17:22:55 -06'00'

NO SCALE

DESIGN PHASE:	AFC
QUALITY LEVEL:	3
HORIZONTAL SCALE:	NONE
VERTICAL SCALE:	NA

FOR DRAWING INDEX SEE DRAWING NO. 571500

PROJECT NUMBER: 31720

INDEX CODE NUMBER			
AREA	TYPE	CL	ORIG
200	0666	24	136

SIZE D DWG- 571502 REV 1

DRF NO. 343942 SHEET P-2

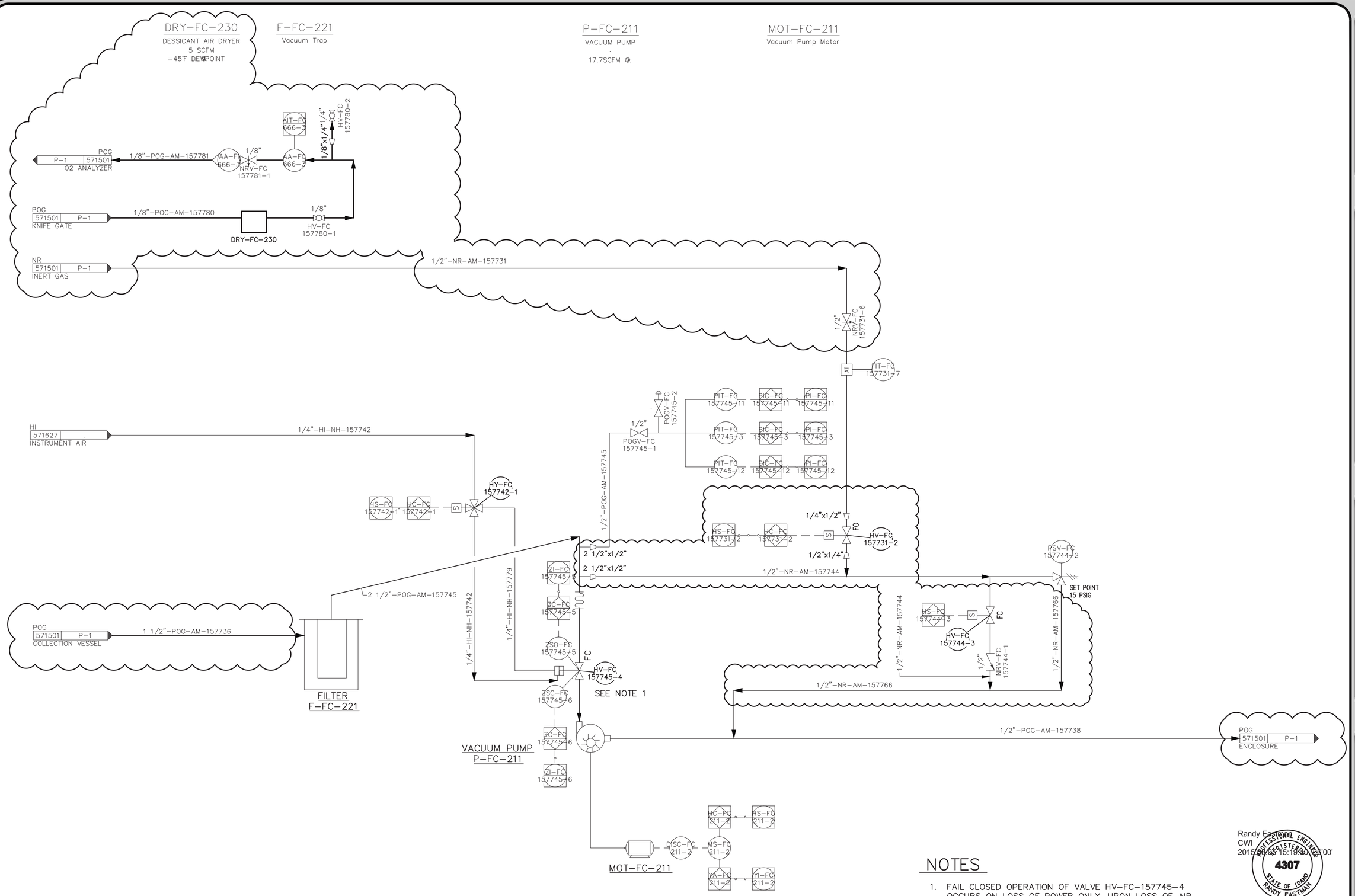

NOTES

1. FAIL CLOSED OPERATION OF VALVE HV-FC-157745-4 OCCURS ON LOSS OF POWER ONLY. UPON LOSS OF AIR THE VALVE FAILS IN LAST POSITION.

Randy Eastman
CWI
2015.08.05 15:19:30 -06'00'

PROFESSIONAL ENGINEER REGISTERED 4307 STATE OF IDAHO RANDY EASTMAN

I CERTIFY THE CHANGES SHOWN ON THIS DRAWING REFLECT THE CURRENT CONSTRUCTED CONDITION AS OF 07/15/2015

REVISION HISTORY

REV	DESCRIPTION
1	CHANGED OFF PAGE CONNECTOR, SEE DRF-344903
2	INCORP'D FDC-10473, SEE DRF-346066

Idaho Cleanup Project — CH2M-WG IDAHO, LLC

CPP-666

RH-TRU SODIUM DISTILLATION SYSTEM
CONDENSER/COLLECTION VESSEL

FILTER AND VACUUM PUMP
PIPING AND INSTRUMENTATION DIAGRAM

SIGNATURES/DATES APPLY TO CURRENT RELEASE ONLY

	SIGN AND DATE
DESIGN: R. CAMPBELL	Rodney C. Campbell HukariAscendent 2015.08.05 14:46:25 -06'00'
DRAFTER: A. KEY	Angela L Key Nuclear Technology 2015.08.05 15:02:16 -06'00'
TECHNICAL CHECK: T. BURNETT, P.E.	Troy P. Burnett Walsh Engineering 2015.08.05 15:12:04 -06'00'
ENG GROUP SUPERVISOR: R. EASTMAN, P.E.	Randy Eastman CWI 2015.08.05 15:19:31 -06'00'
DESIGN LEAD/AUTHORITY: D. MORGAN	David Morgan CWI 2015.08.05 14:51:40 -06'00'
DRAFTING CHECK/ EFFECTIVE DATE: S. BERTHELSON	Shawn Berthelson CWI 2015.08.05 17:22:47 -06'00'

NO SCALE

DESIGN PHASE:	AFC
QUALITY LEVEL:	3
HORIZONTAL SCALE	NONE
VERTICAL SCALE	NA

FOR DRAWING INDEX SEE DRAWING NO. 571500

PROJECT NUMBER: 31720

INDEX CODE NUMBER			
AREA	TYPE	CL	ORIG
200	0666	24	136

SIZE D — DWG- 571503 — REV 2

DRF NO. 343942 — SHEET P-3

FMT-DV-REV 2014-01-29

ID: KEYAL
Layout Name: 571626
Date: 08/05/15 - 1:52 PM
DRF-346066
File: 571503_P-3.dwg
Path: K:\RH-TRU Distillation\Drawings\

REVISIONS	
REV	DESCRIPTION
1	SEE DRF-346066 INCORPORATED FDC-10284, FDC-10297 FDC-10312, FDC-10426, FDC-10441, FDC-10445, FDC-10482 ADDED NEW SHEET 2

NOTES:

1. REMOVE ALL BURRS AND SHARP EDGES.

2. ALL MACHINED FILLET RADII .030 MAXIMUM UNLESS OTHERWISE NOTED.

3. FINAL ASSEMBLY SHALL BE FREE OF DIRT, CHIPS, WELDING FLUX, SLAG, SCALE OIL, GREASE, ETC. PERFORM A VISUAL INSPECTION ON THE FINAL ASSEMBLY PER ASTM A380, PARA 7.2.1 FOR OFF-SITE FABRICATION OR FINAL ASSEMBLY SHALL MEET CLEANLINESS REQUIREMENTS OF STD-7022, LEVEL D FOR ON-SITE FABRICATION.

4 WELDING SHALL BE PERFORMED IN ACCORDANCE WITH ASME B&PV CODE SECTION IX USING ITEM 9 FOR OFF-SITE FABRICATION OR WELD PER INL WELD PROCEDURE SPECIFICATION S2.0 USING ITEM 9 FOR ON-SITE FABRICATION.

5 VISUALLY INSPECT ALL WELDS IN ACCORDANCE WITH ASME B&PV CODE, SECTION V, ARTICLE 9 FOR OFF-SITE FABRICATION OR VISUALLY INSPECT ALL WELDS IN ACCORDANCE WITH TPR-4981 "VISUAL EXAMINATION" FOR PRESSURE VESSELS. ACCEPTANCE CRITERIA SHALL BE PER APPENDIX B, "ACCEPTANCE CRITERIA FOR ASME CODE, SECTION VIII, DIVISION 1 WELDS, BASE MATERIALS AND BRAZING" FOR ON-SITE FABRICATION.

6. LIQUID PENETRANT EXAMINATION FOR OFF-SITE FABRICATION SHALL BE PERFORMED IN ACCORDANCE WITH THE B&PV CODE SECTION V ARTICLE 6. ACCEPTANCE CRITERIA SHALL BE:

A. ALL SURFACES TO BE EXAMINED SHALL BE FREE OF:

I. RELEVANT LINEAR INDICATIONS

II. RELEVANT ROUNDED INDICATIONS GREATER THAN 5 MM (3/16")

III. FOUR OR MORE RELEVANT ROUNDED INDICATIONS IN A LINE SEPARATED BY 1.5 MM (1/16") OR LESS, EDGE-TO-EDGE.

B. CRACK LIKE INDICATIONS DETECTED, IRRESPECTIVE OF SURFACE CONDITIONS, ARE UNACCEPTABLE.

LIQUID PENETRANT EXAMINATION FOR ON-SITE FABRICATION SHALL BE PERFORMED ON ALL WELDS IN ACCORDANCE WITH TPR-4975 "LIQUID PENETRANT EXAMINATON," APPENDIX G, WITH ACCEPTANCE PER APPENDIX G, "ACCEPTANCE CRITERIA FOR ASME SECTION VIII WELDS. " USE LIQUID PENETRANT EXAMINATION OF ROOT AND FINAL PASS FOR BUTT WELDS AND FINAL PASS FOR FILLET WELDS.

7. MARK PER STD-7006-2A OR STD-7006-2D IN 1 1/2" HIGH CHARACTERS WITH INFORMATION AS SHOWN WHERE "YY" IS THE UNIQUE NUMBER ASSIGNED TO EACH ASSEMBLY BUILT AND "XXXX" IS THE MEASURED WEIGHT OF THE -0 ASSEMBLY TO THE NEAREST POUND. LOCATE APPROXIMATELY WHERE SHOWN. FILL CHARACTERS WITH SANFORD T.E.C. MARKER #13401 OR #13501, ITW DYMON FORMULA Q404 INK OR OTHER HIGH-PURITY LOW-CHLORIDE BLACK INK THAT COMPLIES WITH ASTM C1217-00 OR RDT F7-3T. DO NOT APPLY VARNISH OVER MARKING.

8. VERIFY MARKINGS HAVE BEEN ACCURATELY APPLIED AND RECORD THE MEASURED WEIGHT.

9. BOLT TORQUES:
TORQUE 7/16"-14UNC BOLTS, ITEM 6 TO 40 (+4/-0) FT-LBS
TORQUE 1/4"-20UNC BOLTS, ITEM 18 TO 12 (+2/-0) FT-LBS

10. USE THREAD LUBRICANT, ITEM 12, ON ALL BOLT THREADS.

11. BEFORE WELDING TOP FLANGE (ITEM 19) TO OUTER TANK ASSEMBLY (ITEM 1), PLACE THE INNER TANK ASSEMBLY INTO THE OUTER TANK ASSEMBLY AND CENTER THE INNER TANK ASSEMBLY USING THE TOP COVER FLANGE. AFTER CENTERING THE INNER TANK ASSEMBLY, INSTALL ITEMS 5 & 6 THEN CAREFULLY FILL THE OUTER TANK WITH LEAD SHOT (ITEM 8) AVOIDING MOVING THE INNER TANK ASSEMBLY.

12. DESIGN PRESSURE = FULL VACUUM TO 15 PSIG.

13. DESIGN TEMPERATURE: SEE DDS-1547

14. SEAL OPENINGS IN TOP HEAD FLANGE PENETRATIONS WITH SILICONE SEALANT, ITEM 10, TO ENSURE LEAD SHOT (ITEM 8) IS RETAINED.

15. USE PIPE THREAD SEALANT, ITEM 20, ON ALL THREADED PIPE CONNECTIONS.

16. COMPLETED THERMAL FLUID SIDE OF THE CONDENSER SHALL UNDERGO A PNEUMATIC LEAK TEST IN ACCORDANCE WITH ASME B&PV CODESECTION V, ARTICLE 10 "LEAK TESTING", MANDATORY APPENDIX PRESSURE OF 165 PSIG. INSPECT FOR LEAKS. PRESSURE DROP SHALL NOT EXCEED 1.0 PSIG OVER A 10 MINUTE PERIOD FOR OFF-SITE FABRICATION.

COMPLETED THERMAL FLUID SIDE OF THE CONDENSER SHALL UNDERGO A PNEUMATIC LEAK TEST IN ACCORDANCE WITH TPR-4976 "LEAK TEST" APPENDIX C "PRESSURE CHANGE TEST" AT A PRESSURE OF 165 PSIG. INSPECT FOR LEAKS. PRESSURE DROP SHALL NOT EXCEED 1.0 PSIG OVER A 10 MINUTE PERIOD FOR ON-SITE FABRICATION.

LEAK TEST SHALL BE PERFORMED BEFORE LEAD SHOT IS INSTALLED SO THREADED JOINTS CAN BE OBSERVED.

(NOTES CONTINUED)

17. COMPLETED VACUUM SIDE OF THE CONDENSER SHALL UNDERGO A PNEUMATIC LEAK TEST IN ACCORDANCE WITH ASME B&PV CODE SECTION V, ARTICLE 10 "LEAK TESTING" MANDATORY APPENDIX VI "PRESSURE CHANGE TEST" AT A PRESSURE OF 14-14.9 PSIG. INSPECT FOR LEAKS. PRESSURE DROP SHALL NOT EXCEED 0.1 PSIG OVER A 10 MINUTE PERIOD FOR OFF-SITE FABICATION.

COMPLETED VACUUM SIDE OF THE CONDENSER SHALL UNDERGO A PNEUMATIC LEAK TEST IN ACCORDANCE WITH TPR-4976, "LEAK TEST" APPENDIX C "PRESSURE CHANGE TEST" AT A PRESSURE OF 14-14.9 PSIG. INSPECT FOR LEAKS. PRESSURE DROP SHALL NOT EXCEED 0.1 PSIG OVER A 10 MINUTE PERIOD FOR ON-SITE FABICATION.

(NOTES CONTINUED)

18. VERIFY INDICATED DIMENSIONS WITH THE VENDOR DRAWING.

19. ADD HANDLES ABOVE & BELOW CENTER OF GRAVITY TO AID IN MOVING VESSEL. TYPE & LOCATION TO BE DETERMINED.

20. ELECTRICAL CONNECTIONS SHALL BE AT LEAST 5 FT FROM THE TOP OF THE LID TO THE CONNECTORS FOR THE HEATERS THERMOCOUPLES AND LEVEL SENSOR SHALL BE AS PROVIDED FROM VENDOR.

21. FACTORY ACCEPTANCE TEST FOR ALL ELECTRICAL COMPONENTS TO BE DETERMINED.

(NOTES CONTINUED)

22. ESTIMATED WEIGHT = 2, 800 LBS.

QTY REQD	-0	QUAL LEVEL	PART OR IDENTIFYING NO.	NOMENCLATURE OR DESCRIPTION	MATERIAL/SPECIFICATION OR VENDOR NAME	ITEM NO.
	1	3	P/N S607BLPTS	SINGLE GANG BLANK DEVICE COVER, SST	CALBRITE	30
	2	3	P/N S60700FB05	3/4" X 1/2" FACE BUSHING, SST	CALBRITE	29
	1	3	P/N S60500CTFX	1/2" BARE FLEX CONDUIT 4 FT LONG	CALBRITE	28
	1	3	P/N S60500FC45	1/2" FLEX CONNECTOR MALE 45 ELBOW	CALBRITE	27
	1	3	P/N S40501GR00	CORD GRIP, SST, .125 - .188" CABLE SIZE	CALBRITE	26
	2	3		BOLT, HEX HD, 1/4" 20UNC X 3/4" LG	GRADE B8 SST ASTM A 193	25
	1	3	P/N S60700FDCS	3/4" SINGLE GANG BOX, SST	CALBRITE	24

PARTS LIST

QTY REQD	-0	QUAL LEVEL	PART OR IDENTIFYING NO.	NOMENCLATURE OR DESCRIPTION	MATERIAL/SPECIFICATION OR VENDOR NAME	ITEM NO.
	1	3	H90070-210	GRAYLOC HUB, BW, 2 GR20, 2 SCH 40 X 2.067	GRAYLOC PRODUCTS	23
	1	3	9P33U4	PLUG, DURATITE, 480 VAC, 2P3W, 30 A	RUSSEL STOLL (T&B)	22
	1	4	CGB396	CABLE GLAND	CROUSE-HINDS	21
15	AR	4	31227	GRAY PIPE JOINT COMPOUND	OATEY	20
	1	3	-19	TOP FLANGE	PLATE, 304 OR 304L SST ASTM A240	19
	10	3		BOLT 1/4-20 UNC 5/8 LG	GRADE B8 SST ASTM A193	18
	1	3	-17	SLOT COVER	PLATE, 304 OR 304L SST ASTM A240	17
	AR	3	9328K41	1" THK. MINERAL WOOL INSULATION HIGH TEMPERATURE	McMASTER-CARR	16
				REMOVED		15
	1	4	TJ36-ICSS-316U-12-SB-HFSTW-M-PD	TEMPERATURE SENSOR, HEAVY DUTY	OMEGA ENGINEERING INC.	14
	1	3	AWH-052-080D-SP	HEAT TRACE	HTS/AMPTEK CO.	13
	AR	4	PN77124	NICKEL ANTI-SIEZE THREAD LUBRICANT	LOCTITE	12
	10	4		WASHER, FLAT, 7/16 TYPE 3 CIRCULAR	ASTM F436	11
	AR	4	732	INDUSTRIAL SEALANT	DOW CORNING	10
	AR	3		WELD FILLER METAL	ER308 OR 308L AWS A5.9	9
	AR	4		LEAD SHOT #4 (.13 DIA.)	MARSHIELD	8
	1	3	5000070	C.F. FLANGE, 2 3/4" DIA. FOR 1.5 DIA TUBE FIXED NON-ROTATING, TAPPED	A & N CORP.	7
	2	3		FLANGE, 2 SLIP ON 300 LB, RAISED FACE	A304 SST ASTM A182	6
	2	3	-5	PIPE	PIPR, SEAMLESS, 304 SST ASTM A 312	5
	10	3		BOLT, HEX HD 7/16-14UNC X 1 LG	ASTM A193 GRADE B8	4
	1	3	-3	TOP PLATE	PLATE, 304 OR 304L SST ASTM A 240	3
	1	3	786869-0	CONDENSER / COLLECTION VESSEL		2
	1	3	786870-0	CONDENSER / COLLECTION OUTER SHELL		1
		3	-0	ASSEMBLY		0

PARTS LIST

William H. Reed
CWI
2015.08.05 08:49:00 -06'00'
PROFESSIONAL ENGINEER REGISTERED 9622 STATE OF IDAHO WILLIAM H. REED

ELECTRICAL

Randy Eastman
CWI
2015.08.05 15:17:32 -06'00'
PROFESSIONAL ENGINEER REGISTERED 4307 STATE OF IDAHO RANDY EASTMAN

MECHANICAL

I CERTIFY THAT THIS DRAWING REFLECTS THE CURRENT CONSTRUCTED CONDITION AS OF 7-15-15

INSPECTION REQUIREMENTS	-0	FINAL
QC REQUIRED	DASH NO.	NEXT ASSY
Q DENOTES Q/C INSP. REQD.	APPLICATION	

DIMENSIONING AND SYMBOLOGY PER ASME Y14.5-2009 AND STD-11

UNLESS OTHERWISE SPECIFIED

SURFACE ROUGHNESS 125

DIMENSIONS AND TOLERANCES ARE IN INCHES

TOLERANCES .X ± .1
DECIMALS .XX ± .03
.XXX ± .010
FRACTIONS ± 1/8
ANGULAR ± 2°

DO NOT SCALE DRAWING

SIGNATURES/DATES APPLY TO CURRENT RELEASE ONLY	SIGN AND DATE
DESIGN: R. CAMPBELL	Rodney C. Campbell HukariAscendent 2015.08.05 14:48:45 -06'00'
DRAFTER: O. MORGAN	DRIN MORGAN URS 2015.08.05 14:16:08 -06'00'
TECHNICAL CHECK: T. BURNETT P.E.	Troy P. Burnett Walsh Engineering 2015.08.05 15:14:13 -06'00'
ENG GROUP SUPERVISOR: R. EASTMAN P.E.	Randy Eastman CWI 2015.08.05 15:17:32 -06'00'
DESIGN LEAD/AUTHORITY: D. MORGAN	David Morgan CWI 2015.08.05 14:54:01 -06'00'
DRAFTING CHECK/ EFFECTIVE DATE: S. BERTHELSON	Shawn Berthelson CWI 2015.08.05 17:21:13 -06'00'
PROJECT NUMBER: 31720	
DRF NUMBER: 343891	

Idaho Cleanup Project CH2M•WG IDAHO, LLC

CPP-666
RH-TRU DISTILLATION SYSTEM
CONDENSER / COLLECTION VESSEL ASSEMBLY
COND-FC-103A / VES-FC-85A

SIZE	INDEX CODE NUMBER AREA	TYPE	CL	ORIG.	DWG-	REV
D	200	0666	53	136	786868	1

SCALE: NOTED | FS | SHEET 1 OF 5

INV: FMT-D1-REV 2014-01-29

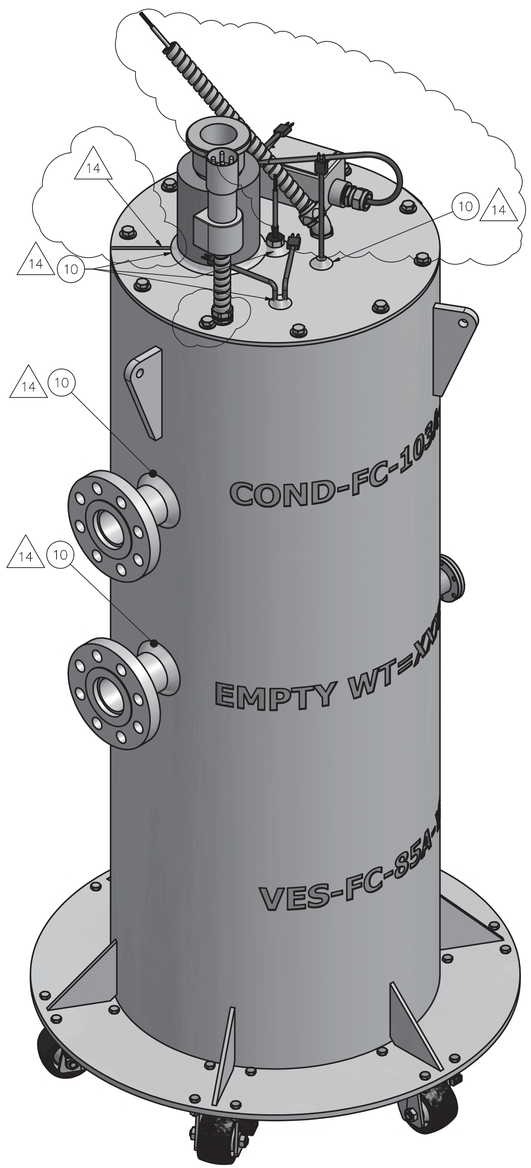

3D VIEW
(SHOWN FOR CLARITY)
SCALE: NONE

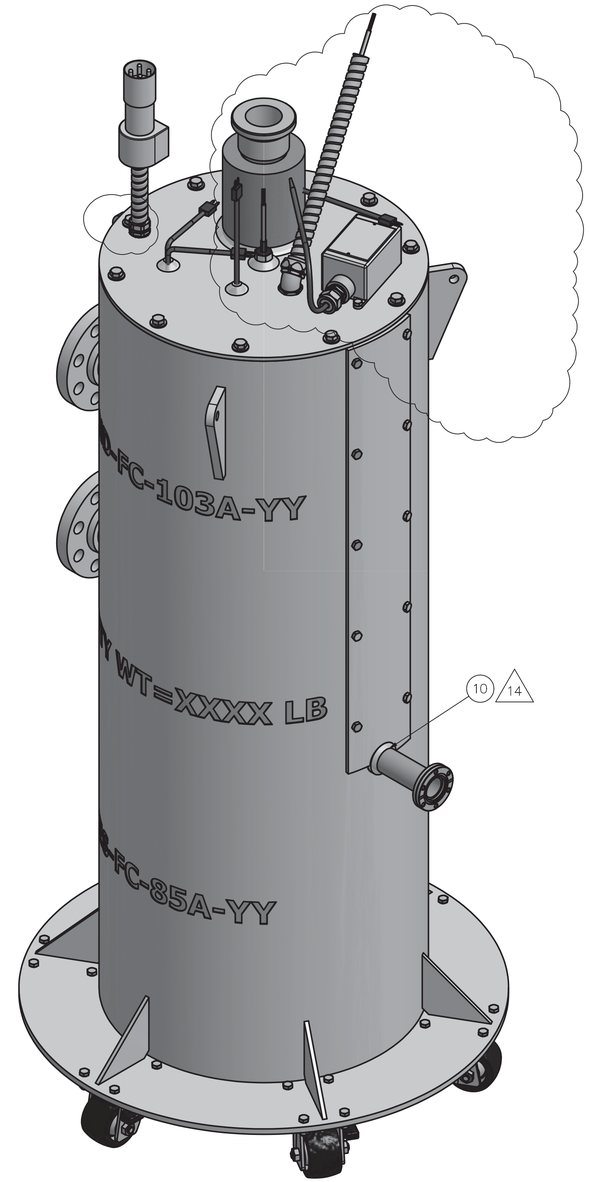

3D VIEW
(SHOWN FOR CLARITY)
SCALE: NONE

-0 ASSEMBLY

SIZE	INDEX CODE NUMBER				DWG-	REV
D	AREA	TYPE	CL	ORIG	786868	1
	200					
SCALE:					FS	SHEET 2

ID: pennmr
Layout Name:
File: 786868-1.dwg
Path: \A\ Vault Designs\MISC\MFC\CONDENSER NEW\786868-1.dwg

INV: FMT-D1-REV 2014-01-29

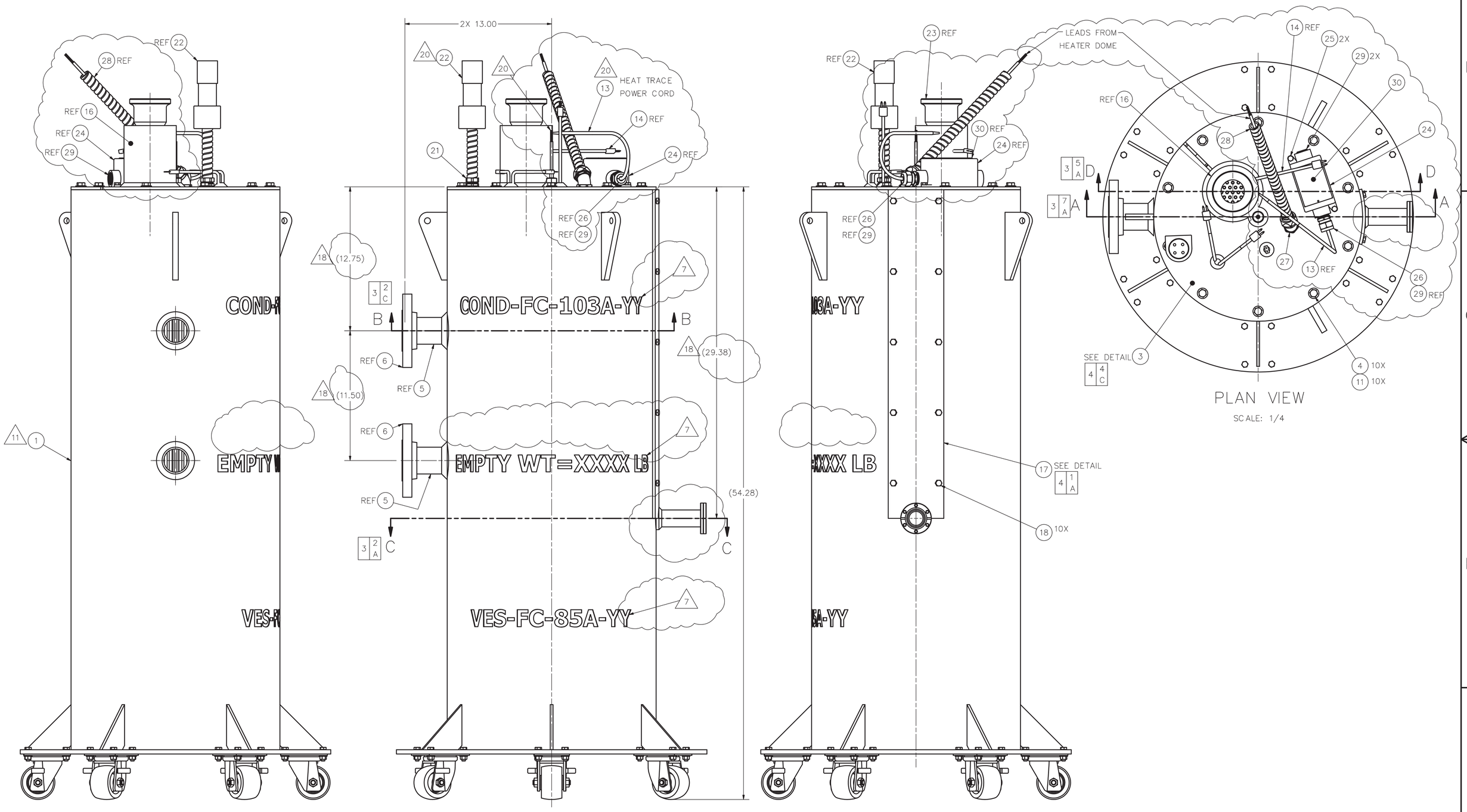

PLAN VIEW

SCALE: 1/4

−0 ASSEMBLY

SCALE: 1/4

SIZE	INDEX CODE NUMBER				DWG-	REV
	AREA	TYPE	CL	ORIG		
D	200	0666	53	136	786868	1
SCALE: NOTED					FS	SHEET 3

ID: pennmr
Layout Name:
File: 786868-1.dwg
Path: Y:_Vault Designs\MISC\MFG\CONDENSER NEW\786868-1.dwg

INV: FMT-D1-REV 2014-01-29

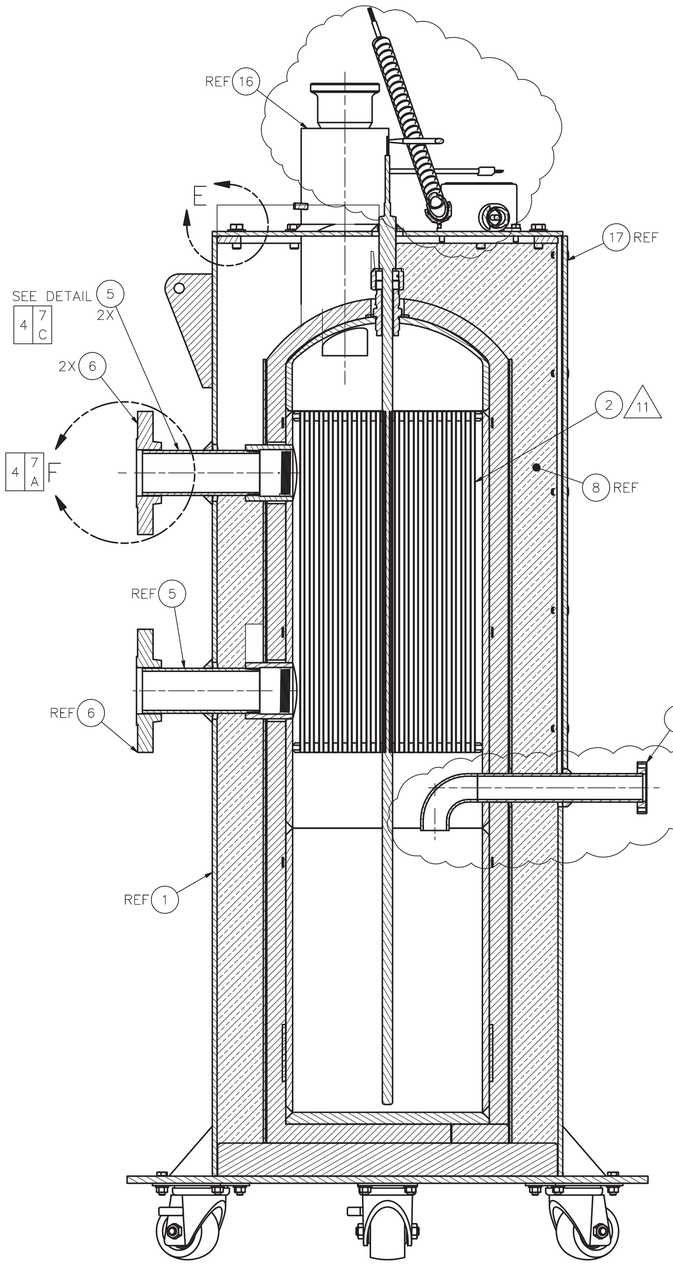

SECTION A–A

SCALE: 1/4

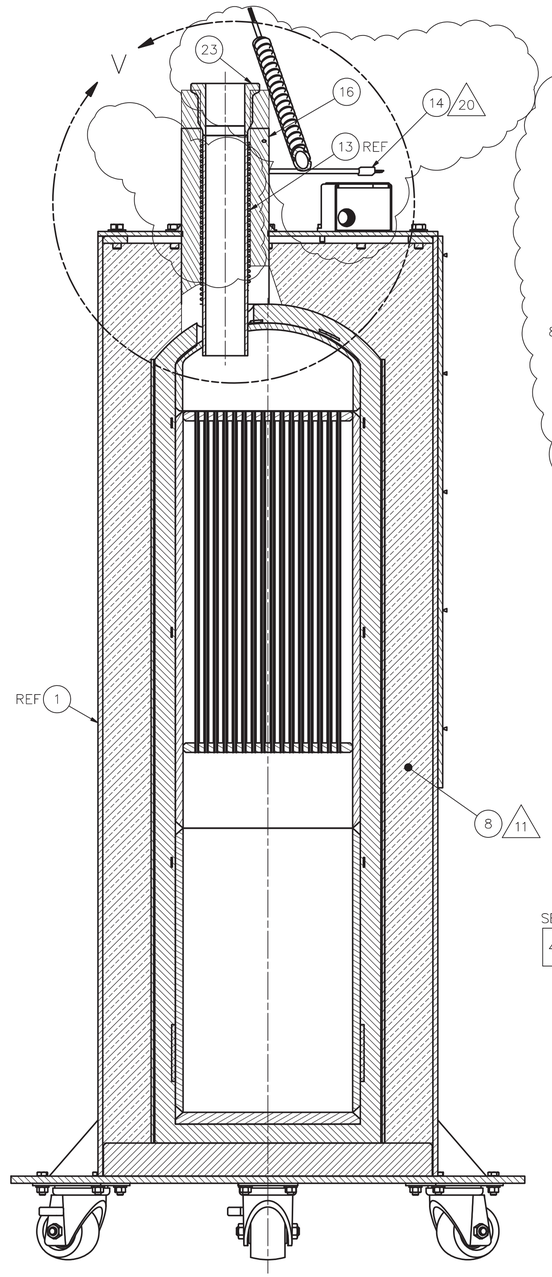

SECTION D–D

SCALE: 1/4

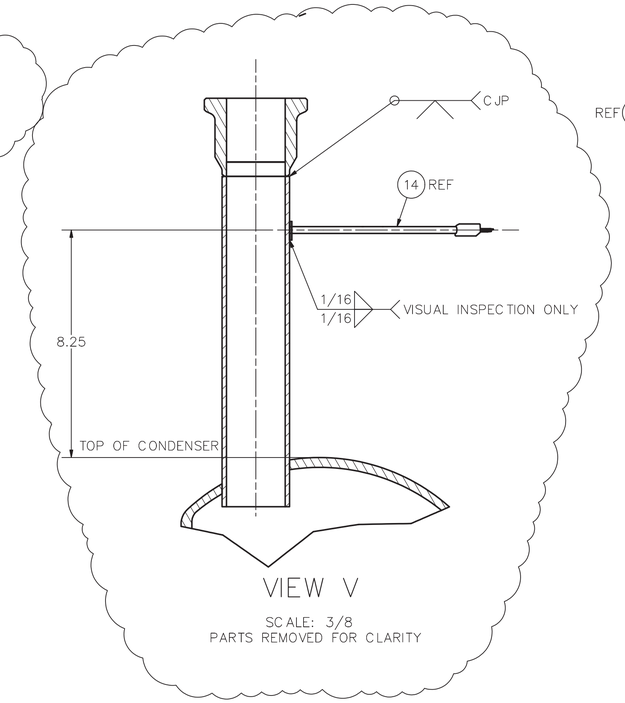

VIEW V

SCALE: 3/8
PARTS REMOVED FOR CLARITY

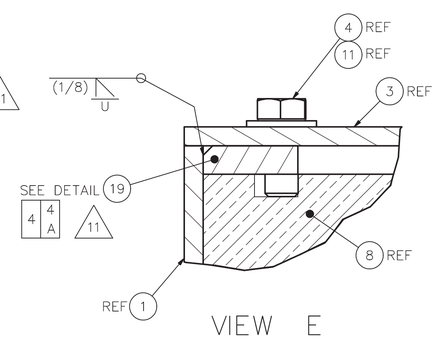

VIEW E

SCALE: 1/1

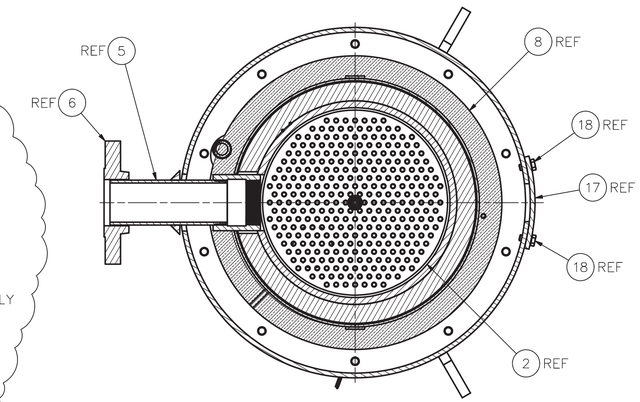

SECTION B–B

SCALE: 1/4

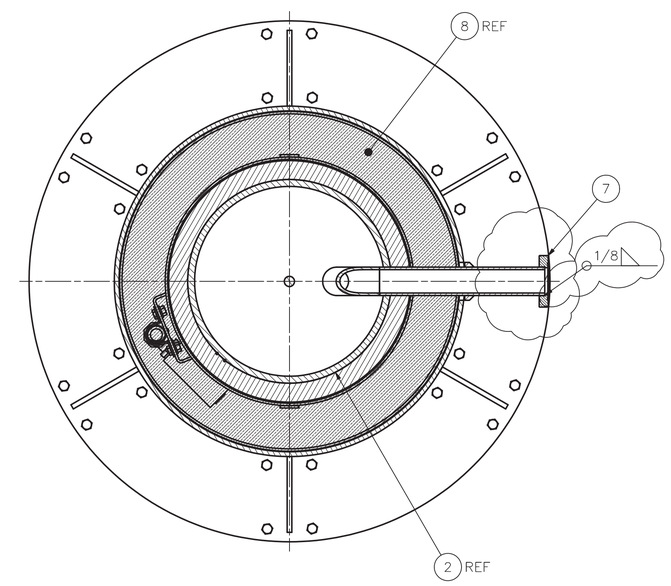

SECTION C–C

SCALE: 1/4

SIZE	INDEX CODE NUMBER				DWG–	REV
	AREA	TYPE	CL	ORIG		
D	200	0666	53	136	786868	1
SCALE: NOTED					FS	SHEET 4

File: 786868-1.dwg
Path: V:_Vault\Designs\MISC\MFG\CONDENSER NEW\786868-1.dwg
Layout Name:
ID: pennmr

INV: FMT-D1-REV 2014-01-29

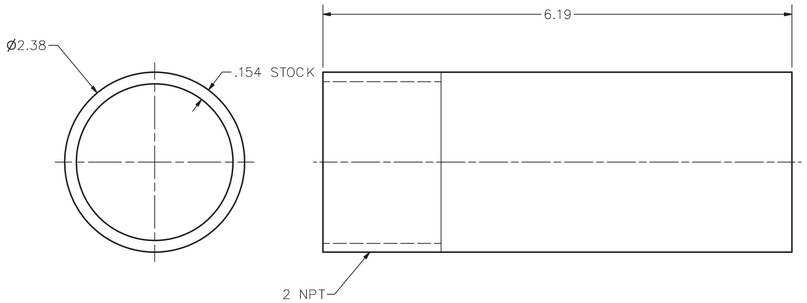

5 DETAIL
SCALE: 1/1

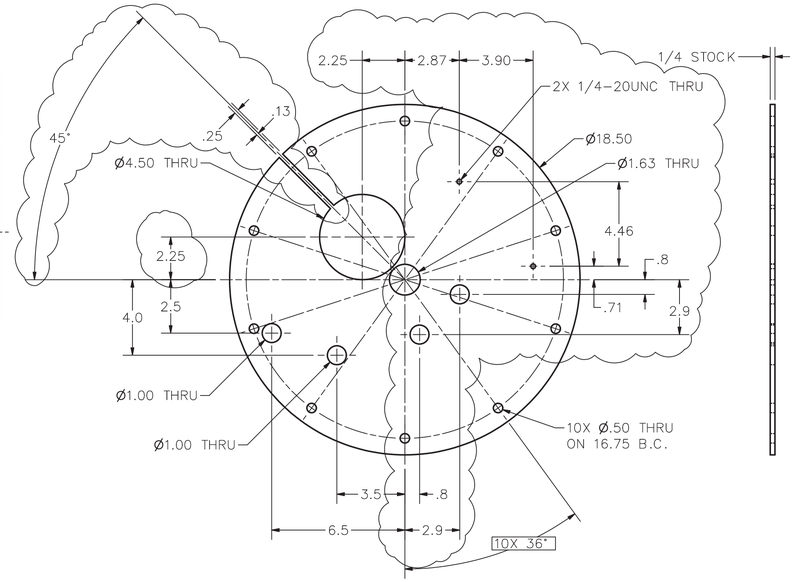

3 DETAIL
SCALE: 1/4

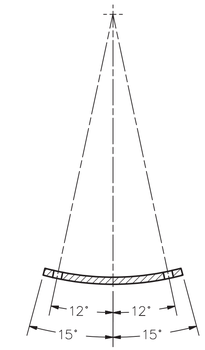

SECTION H-H
SCALE: 3/8

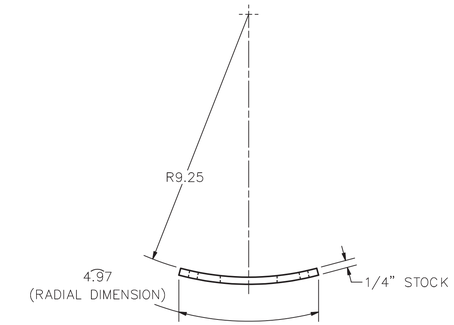

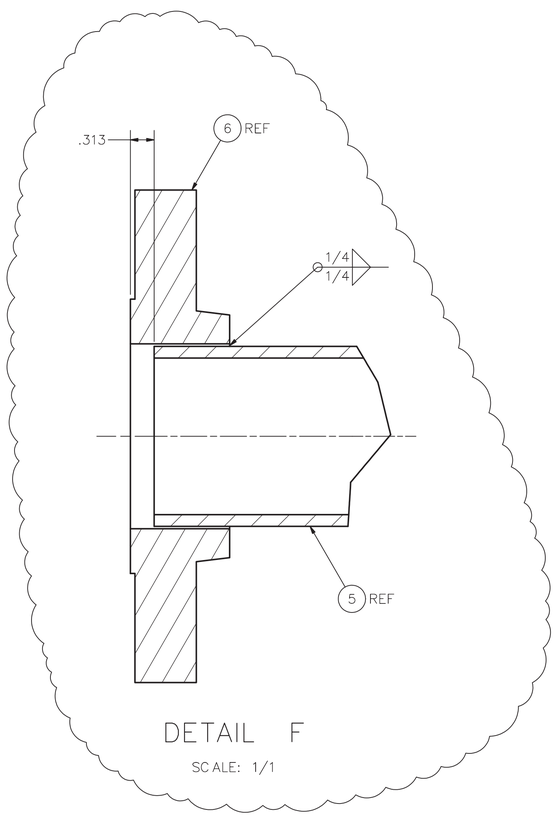

DETAIL F
SCALE: 1/1

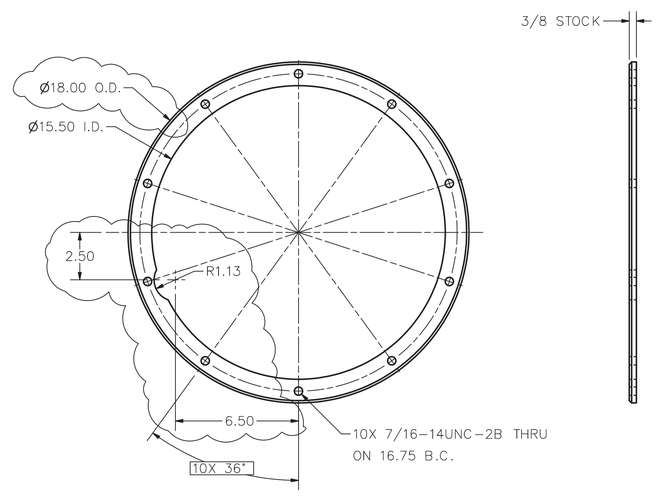

19 DETAIL
SCALE: 1/4

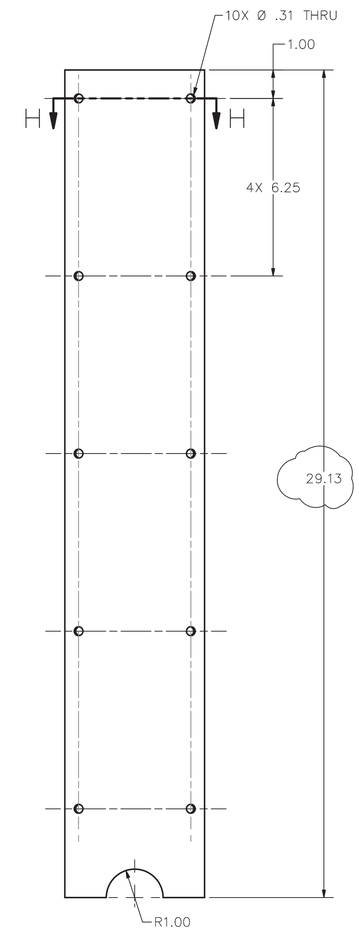

17 DETAIL
SCALE: 3/8

SIZE	INDEX CODE NUMBER				DWG-	REV
	AREA	TYPE	CL	ORIG		
D	200	0666	53	136	786868	1
SCALE: NOTED					FS	SHEET 5

File: 786868-1.dwg
Path: Y:_Vault\Designs\MISC MFG\CONDENSER NEW\786868-1.dwg
Layout Name:
ID: pennmr

REVISIONS	
REV	DESCRIPTION
1	SEE DRF-346066 INCORPORATED FDC-10284, FDC-10316, FDC-10323, FDC-10425, FDC-10430, FDC-10441, FDC-10456, FDC-10472, FDC-10499

NOTES:

1. REMOVE ALL BURRS AND SHARP EDGES.
2. ALL MACHINED FILLET RADII .030 MAXIMUM UNLESS OTHERWISE NOTED.
3. FINAL ASSEMBLY SHALL FREE OF DIRT, CHIPS, WELDING FLUX, SLAG, SCALE OIL, GREASE, ETC. FOR OFF-SITE FABRICATION OR FINAL ASSEMBLY SHALL MEET CLEANLINESS REQUIREMENTS OF STD-7022, LEVEL D FOR ON-SITE FABRICATION.
4. WELDING SHALL BE PERFORMED IN ACCORDANCE WITH ASME B&PV CODE SECTION IX USING ITEM 20 FOR OFF-SITE FABRICATION OR WELD PER INL WELD PROCEDURE SPECIFICATION S2.0 USING ITEM 20 FOR ON-SITE FABRICATION.
5. VISUALLY INSPECT ALL WELDS IN ACCORDANCE WITH ASME B&PV CODE, SECTION V, ARTICLE 9 FOR OFF-SITE FABRICATION OR VISUALLY INSPECT ALL WELDS IN ACCORDANCE WITH TPR-4981 "VISUAL EXAMINATION" FOR PRESSURE VESSELS. ACCEPTANCE CRITERIA SHALL BE PER APPENDIX B, "ACCEPTANCE CRITERIA FOR ASME CODE, SECTION VIII, DIVISION 1 WELDS, BASE MATERIALS AND BRAZING" FOR ON-SITE FABRICATION.
6. LIQUID PENETRANT EXAMINATION FOR OFF-SITE FABRICATION SHALL BE PERFORMED IN ACCORDANCE WITH THE B&PV CODE SECTION V ARTICLE 6. ACCEPTANCE CRITERIA SHALL BE:
   - A. ALL SURFACES TO BE EXAMINED SHALL BE FREE OF:
     - I. RELEVANT LINEAR INDICATIONS
     - II. RELEVANT ROUNDED INDICATIONS GREATER THAN 5 MM (3/16")
     - III. FOUR OR MORE RELEVANT ROUNDED INDICATIONS IN A LINE SEPARATED BY 1.5 MM (1/16") OR LESS, EDGE-TO-EDGE.
   - B. CRACK LIKE INDICATIONS DETECTED, IRRESPECTIVE OF SURFACE CONDITIONS, ARE UNACCEPTABLE.

   LIQUID PENETRANT EXAMINATION FOR ON-SITE FABRICATION SHALL BE PERFORMED ON ALL WELDS IN ACCORDANCE WITH TPR-4975 "LIQUID PENETRANT EXAMINATON," APPENDIX G, WITH ACCEPTANCE PER APPENDIX G, "ACCEPTANCE CRITERIA FOR ASME SECTION VIII WELDS. " USE LIQUID PENETRANT EXAMINATION OF ROOT AND FINAL PASS FOR BUTT WELDS AND FINAL PASS FOR FILLET WELDS.
7. COMPLETED ASSEMBLY SHALL UNDERGO A PNEUMATIC LEAK TEST IN ACCORDANCE WITH B&PV CODE SECTION V, ARTICLE 10 AND B&PV CODE SECTION VIII, SECTION UG-100 FOR OFF-SITE FABRICATION OR IN ACCORDANCE WITH TPR-4976 "LEAK TEST PROCEDURE," APPENDIX A "BUBBLE TEST-DIRECT PRESSURE TECHNIQUE, "FOR ON-SITE FABRICATION, AT A PRESSURE OF 16.5 TO 18.8 PSIG. "SNOOP" ALL CONNECTIONS FOR LEAKS, PRESSURE DROP SHALL NOT EXCEED 0.1 PSIG OVER A 15 MINUTE PERIOD.
8. USE THREADLOCKER, ITEM 26, ON THREADS OF FITTING, AVOIDING PLACING ANY ON THE SEALIING SURFACES. IF ANY IS ON THE SEALING SURFACE, IMMEDIATELY CLEAN IT UP.
9. DESIGN TEMPERATURE = SEE DDS-1547.
10. DESIGN PRESSURE = FULL VACUUM TO 15 PSIG.
11. INSULATION (ITEM 8) TO BE INSTALLED BY FABRICATOR, AND ATTACHED TO CONDENSER/COLLECTION VESSEL AT FABRICATORS DISCRETION.
12. REMOVED
13. PERFORM PRESSURE TEST BEFORE INSULATION AND LINER IS APPLIED.
14. VERIFY WITH CONDENSER DIMENSIONS.
15. USABLE LIQUID LEVEL 14.625" FROM BOTTOM OF COLLECTION VESSEL.

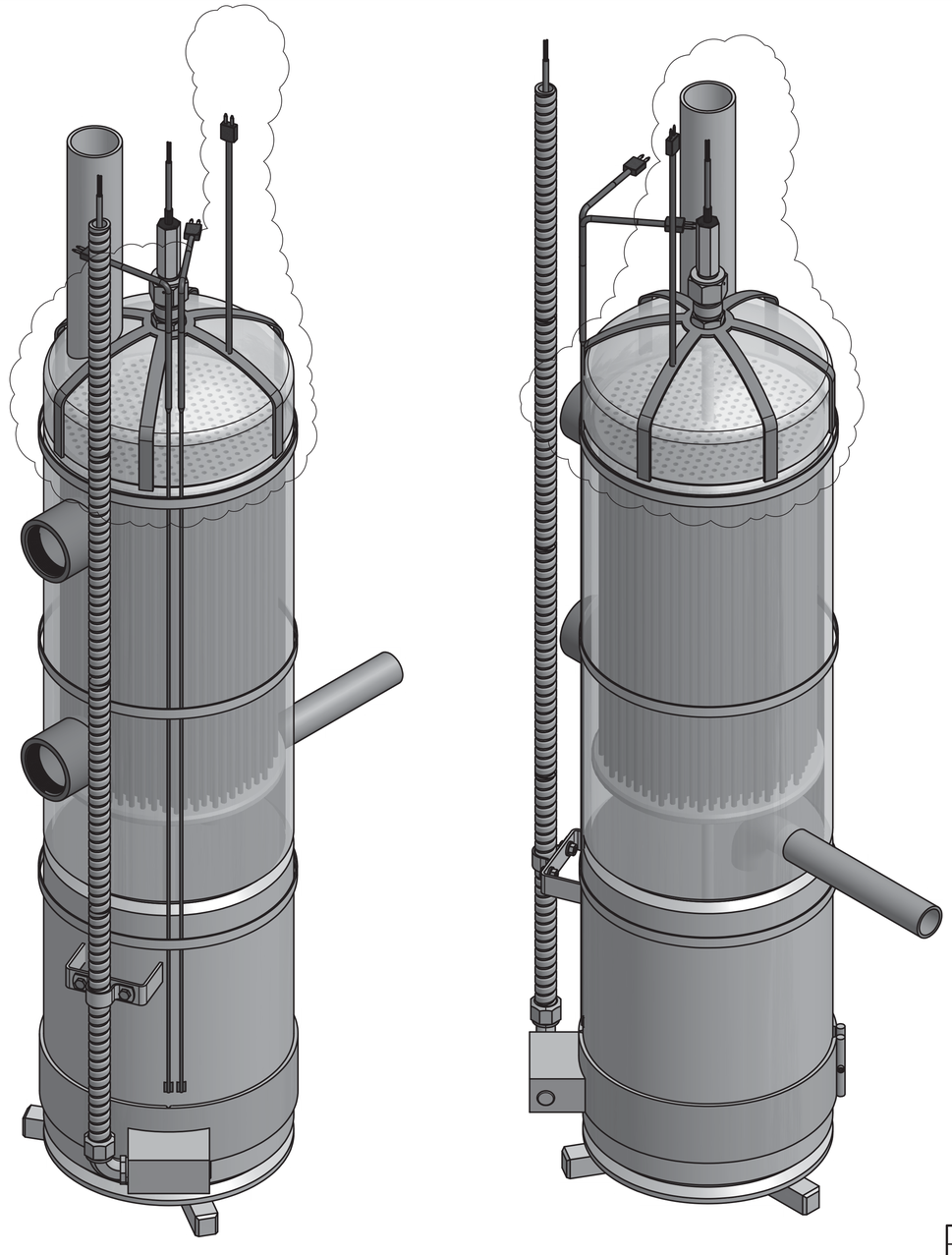

-0 ASSEMBLY
3D VIEW
(SHOWN FOR CLARITY)
SCALE: NONE

William H. Reed
CWI
2015.08.05 16:33:28-06'00'

PROFESSIONAL ENGINEER REGISTERED 9622 STATE OF IDAHO WILLIAM H. REED

ELECTRICAL

Randy Eastman
CWI
2015.08.05 15:16:49-06'00'

PROFESSIONAL ENGINEER REGISTERED 4307 STATE OF IDAHO RANDY EASTMAN

MECHANICAL

I CERTIFY THAT THIS DRAWING REFLECTS THE CURRENT CONSTRUCTED CONDITION AS OF 7-15-15

-12 QTY REQD	-0 QTY REQD	QUAL LEVEL	PART OR IDENTIFYING NO.	NOMENCLATURE OR DESCRIPTION	MATERIAL/SPECIFICATION OR VENDOR NAME	ITEM NO.
	AR	4	2422	THREAD-LOCKER, BLUE HIGH TEMP	LOCTITE	26
	1	3	NI-12-VCR-2	GASKET, 3/4" VCR, NICKEL SILVER PLATED	SWAGELOK	25
	4	3	HT-13-10	HIGH TEMPERATURE RING TERMINAL 12-10AWG, #10 STUD	3M	24
	1	3	S50	SNAP-IN KNOCKOUT BLANKS	APPLETON	23
	1	3	A520-IDNL0115-24	CONDENSOR HEAT TRACE	HTS/AMPTEK CO.	22
						21
AR	AR	3		WELD FILLER METAL	ER308 OR 308L SST AWS A5.9	20
	AR	3	12MTMP	WIRE, HIGH TEMPERATURE, 600V- 1200 DEG F, UL LISTED ONE CONDUCTOR SIZE 12 AWG	BIG CHIEF INC	19
	1	3	MB100N3AP-3001	BAND HEATER, 10.75 I.D. 3" WIDE, 3 KW 480 VAC	WATLOW	18
	2	3		NUT, HEX 1/4-20UNC	GRADE 8 304 SST ASTM A194	17
	2	3		WASHER, FLAT 1/4"	TYPE 3 ASTM F436	16
	2	3		BOLT, HEX HEAD 1/4-20UNC X 1 LG	GRADE B8 304 SST ASTM A193	15
	1	3	HS901-SS	CONDUIT CLAMP	THOMAS & BETTS FITTINGS	14
	1	3	-13	CONDUIT MOUNTING BRACKET	PLATE, 304 OR 304L SST ASTM A 240	13
	1	3	-12	BACK LINER ASSEMBLY		12
2		3	-11	LINER JOINT BAR	PLATE OR BAR 304 OR 304L SST ASTM A240 OR A276	11
	1	3	-10	FRONT LINER	PLATE, 304 OR 304L SST ASTM A240	10
1		3	-9	BACK LINER	PLATE, 304 OR 304L SST ASTM A240	9
	AR	4	9328K41	1" THK. MINERAL WOOL INSULATION, HIGH TEMPERATURE	McMASTER-CARR	8
	4	3	S60500CTFX	1/2" BARE FLEX CONDUIT	CALBRITE	7
	1	4	S60500FC90	1/2" FLEX CONNECTOR MALE 90 DEG. ELBOW	CALBRITE	6
	3	4	5416K44	HOSE CLAMP, WORM DRIVE	McMASTER CARR	5
	2	4	TJ36-ICSS-316U-36-S B-SMPW-M-PD	TEMPERATURE SENSOR, HEAVY DUTY	OMEGA ENGINEERING INC.	4
	1	3	LLS110-CD0002-XX	CONDUCTIVITY LEVEL SWITCH LLS110 CUSTOM WITH LSC4	INTEMPCO CONTROLS LTD	3
	1	3	NE10-18-1	CONDENSER ASSEMBLY	JFD TUBE AND COIL PRODUCTS INC	2
	1	3	786871-0	COLLECTION TANK ASSEMBLY		1
		3	-0	ASSEMBLY		0

PARTS LIST

INSPECTION REQUIREMENTS	-0	786868
QC REQUIRED	DASH NO.	NEXT ASSY
Q DENOTES Q/C INSP. REQD.	APPLICATION	

DIMENSIONING AND SYMBOLOGY PER ASME Y14.5-2009 AND STD-11
UNLESS OTHERWISE SPECIFIED
SURFACE ROUGHNESS 125
DIMENSIONS AND TOLERANCES ARE IN INCHES
TOLERANCES .X ± .1
DECIMALS .XX ± .03
.XXX ± .010
FRACTIONS ± 1/8
ANGULAR ± 2°
DO NOT SCALE DRAWING

SIGNATURES/DATES APPLY TO CURRENT RELEASE ONLY	SIGN AND DATE
DESIGN: R. CAMPBELL	Rodney C. Campbell HukariAscendent 2015.08.05 14:49:11 -06'00'
DRAFTER: O. MORGAN	ORIN MORGAN URS 2015.08.05 14:05:09 -06'00'
TECHNICAL CHECK: T. BURNETTE P.E.	Troy P. Burnett Walsh Engineering 2015.08.05 15:14:34 -06'00'
ENG GROUP SUPERVISOR: R. EASTMAN P.E.	Randy Eastman CWI 2015.08.05 15:16:49 -06'00'
DESIGN LEAD/AUTHORITY: D. MORGAN	David Morgan CWI 2015.08.05 14:54:25 -06'00'
DRAFTING CHECK/ EFFECTIVE DATE: S. BERTHELSON	Shawn Berthelson CWI 2015.08.05 17:20:58 -06'00'
PROJECT NUMBER: 31720	
DRF NUMBER: 343891	

Idaho Cleanup Project CH2M•WG IDAHO, LLC

CPP-666
RH-TRU DISTILLATION SYSTEM
CONDENSER / COLLECTION VESSEL
INNER ASSEMBLY
COND-FC-103A/VES-FC-85A

SIZE	INDEX CODE NUMBER AREA	TYPE	CL	ORIG	DWG-	REV
D	200	0666	53	136	786869	1

SCALE: NOTED FS SHEET 1 OF 4

SCALE: 1/4

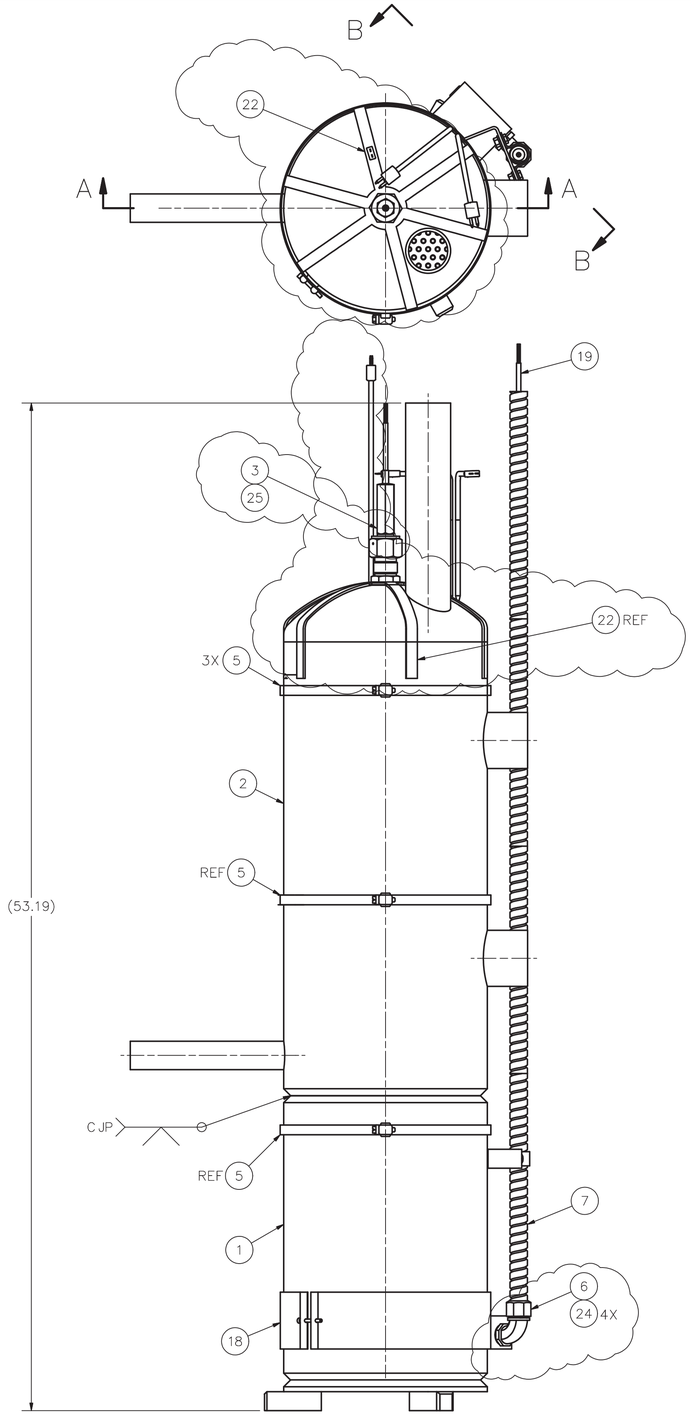

-0 ASSEMBLY

SCALE: 1/4

INSULATION AND LINER NOT SHOWN FOR CLARITY

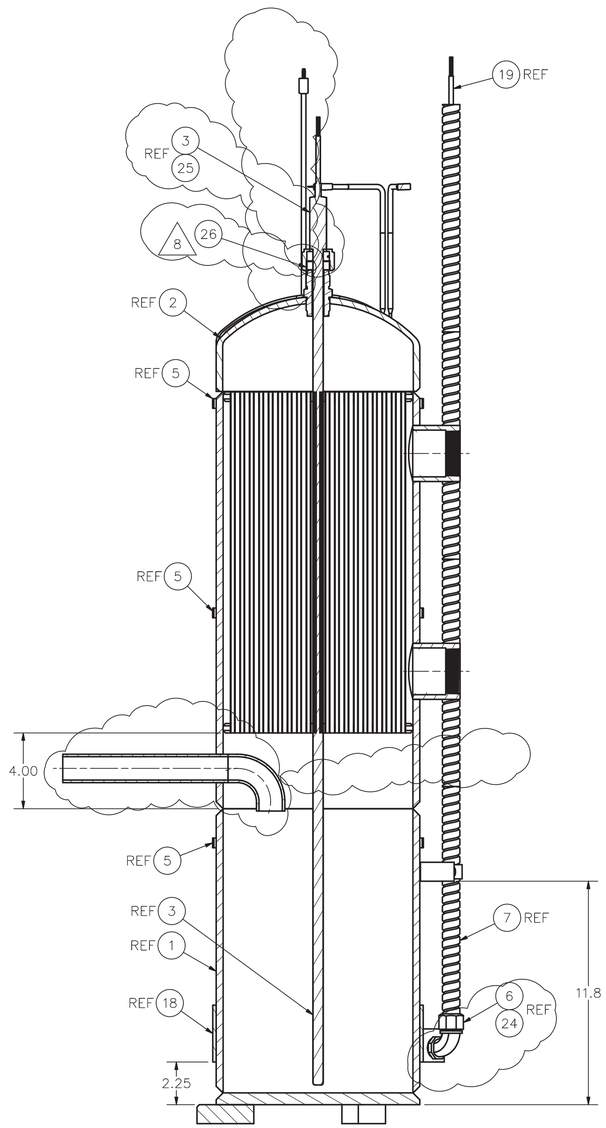

SECTION A-A

SCALE: 1/4

INSULATION AND LINER NOT SHOWN FOR CLARITY

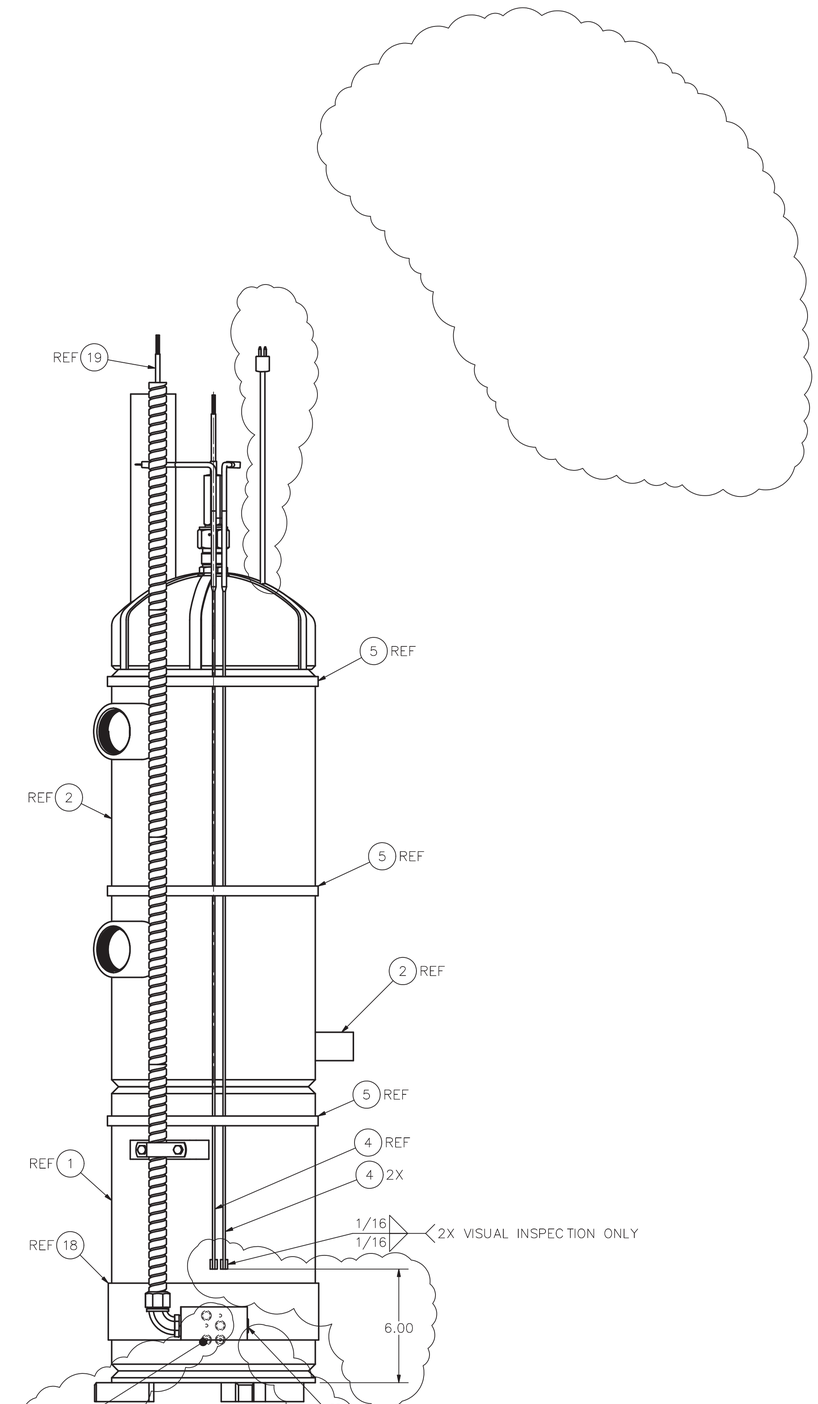

VIEW B-B

SCALE: 1/4

INSULATION AND LINER NOT SHOWN FOR CLARITY

SIZE	INDEX CODE NUMBER				DWG-	REV
	AREA	TYPE	CL	ORIG		
D	200	0666	53	136	786869	1
SCALE: NOTED					FS	SHEET 2

INV: FMT-D1-REV 2014-01-29
ID: pennmr
Layout Name:
File: 786869-1.dwg
Path: V:\ Vault\Designs\MISC\MFC\CONDENSER NEW\786869-1.dwg

INV: FMT-D1-REV 2014-01-29

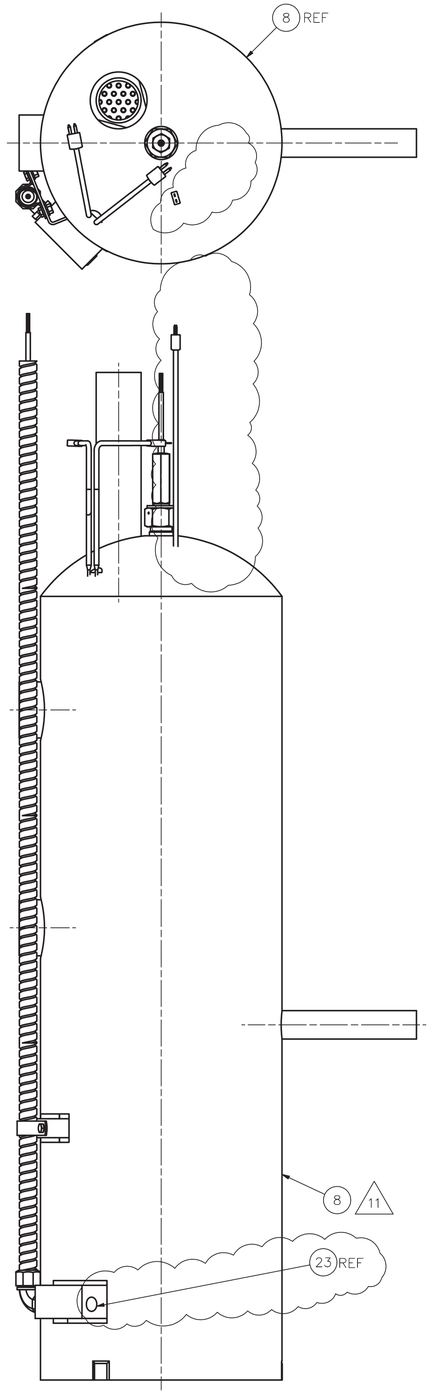

INSULATION INSTALLATION VIEW
SCALE: 1/4

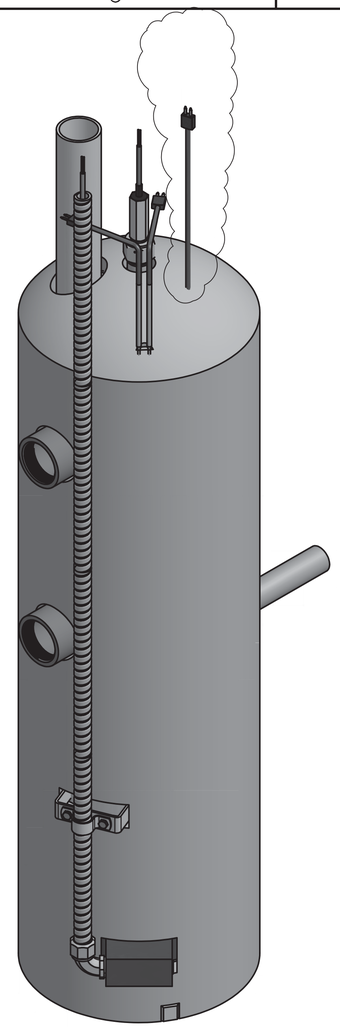

INSULATION
3D VIEW
(SHOWN FOR CLARITY)
SCALE: NONE

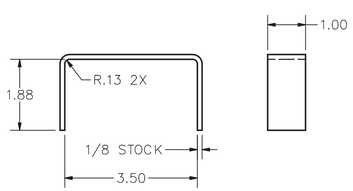

13 DETAIL
SCALE: 1/2

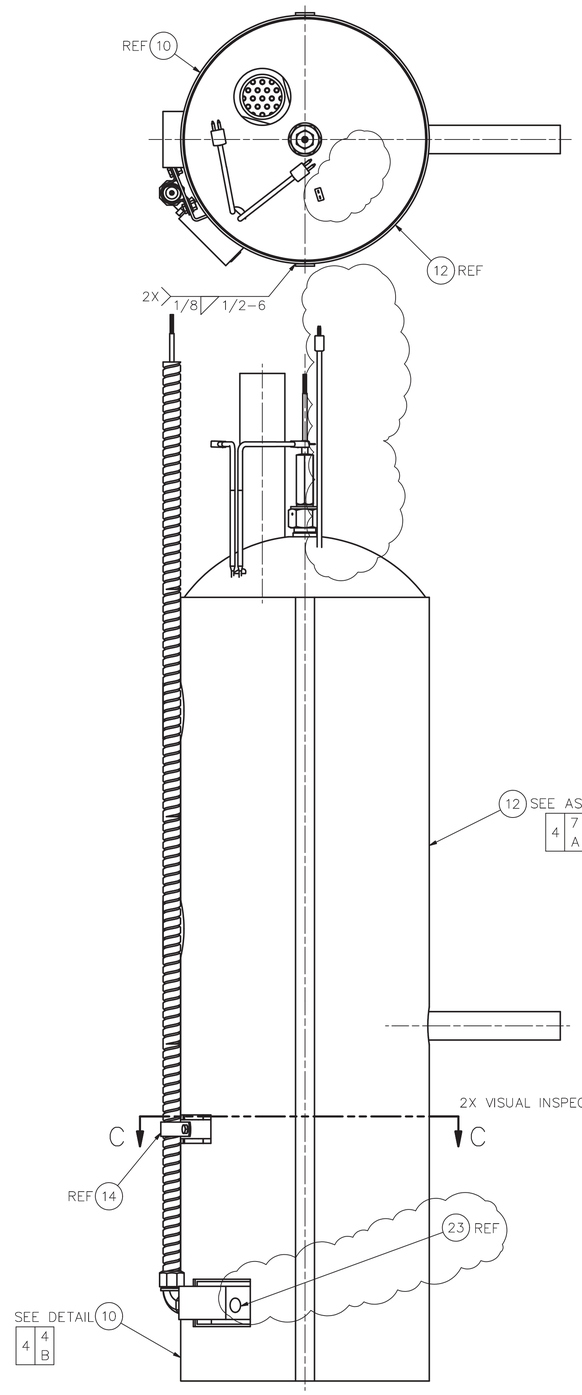

INSULATION SHEILD INSTALLATION VIEW
SCALE: 1/4

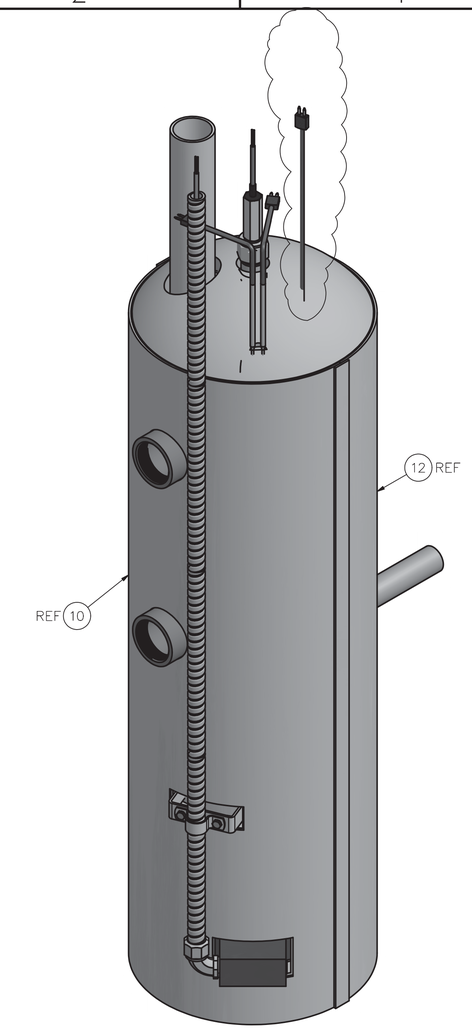

LINER
3D VIEW
(SHOWN FOR CLARITY)
SCALE: NONE

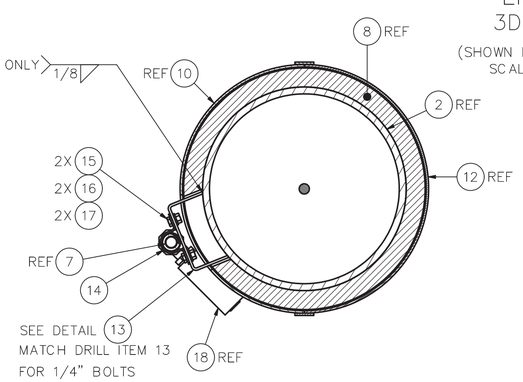

SECTION C–C
SCALE: 1/4

SIZE	INDEX CODE NUMBER				DWG-	REV
	AREA	TYPE	CL	ORIG		
D	200	0666	53	136	786869	1
SCALE: NOTED					FS	SHEET 3

ID: pennmr
Layout Name:
File: 786869-1.dwg
Path: V:_Vault\Designs\MISC\MFG\CONDENSER NEW\786869-1.dwg

INV: FMT-D1-REV 2014-01-29

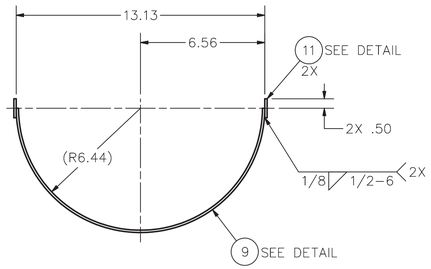

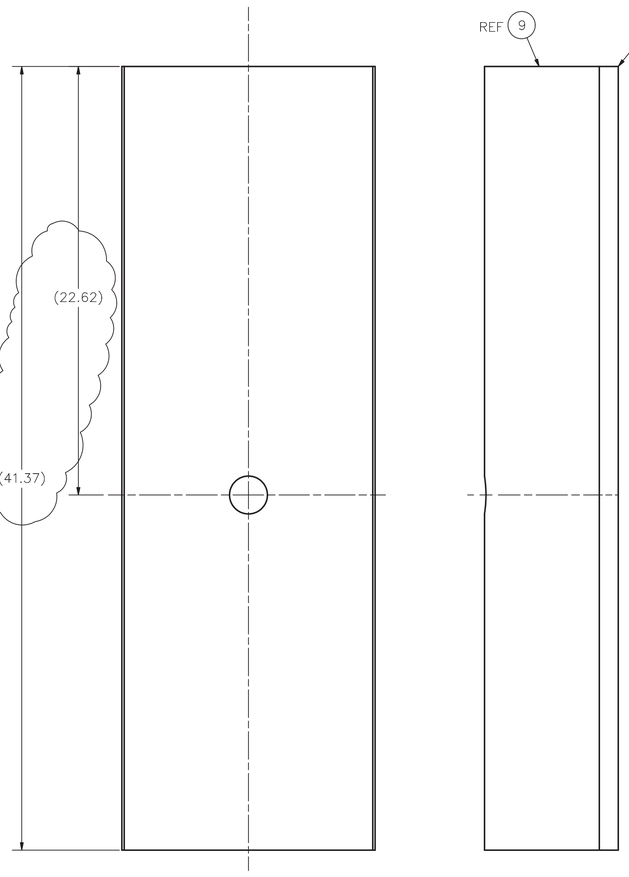

– 12 ASSEMBLY

SCALE: 1/4

3D VIEW

(SHOWN FOR CLARITY)
SCALE: NONE

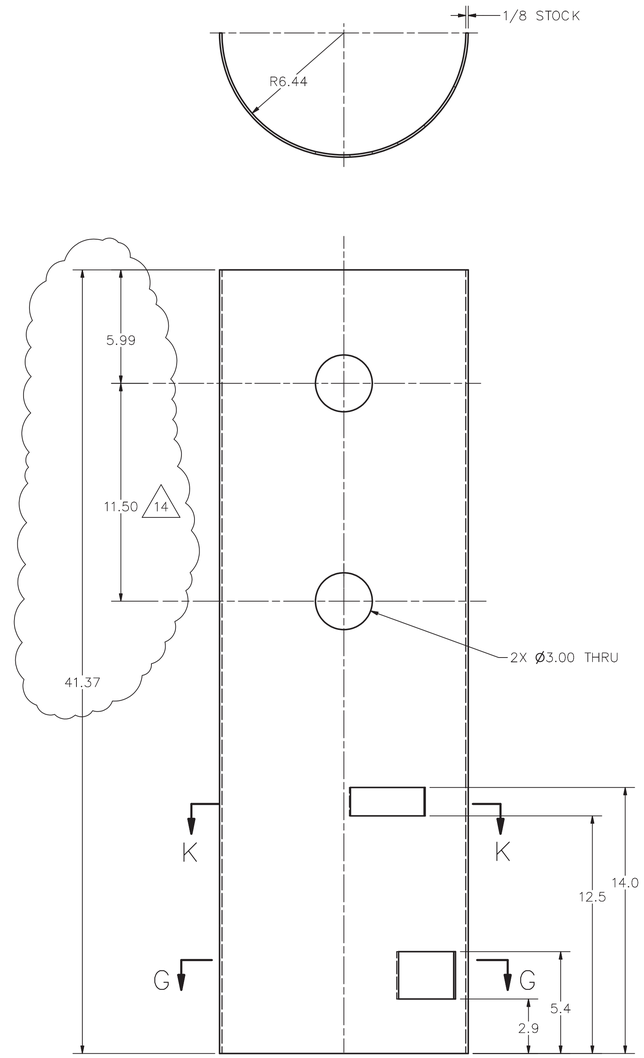

10 DETAIL

SCALE: 1/4

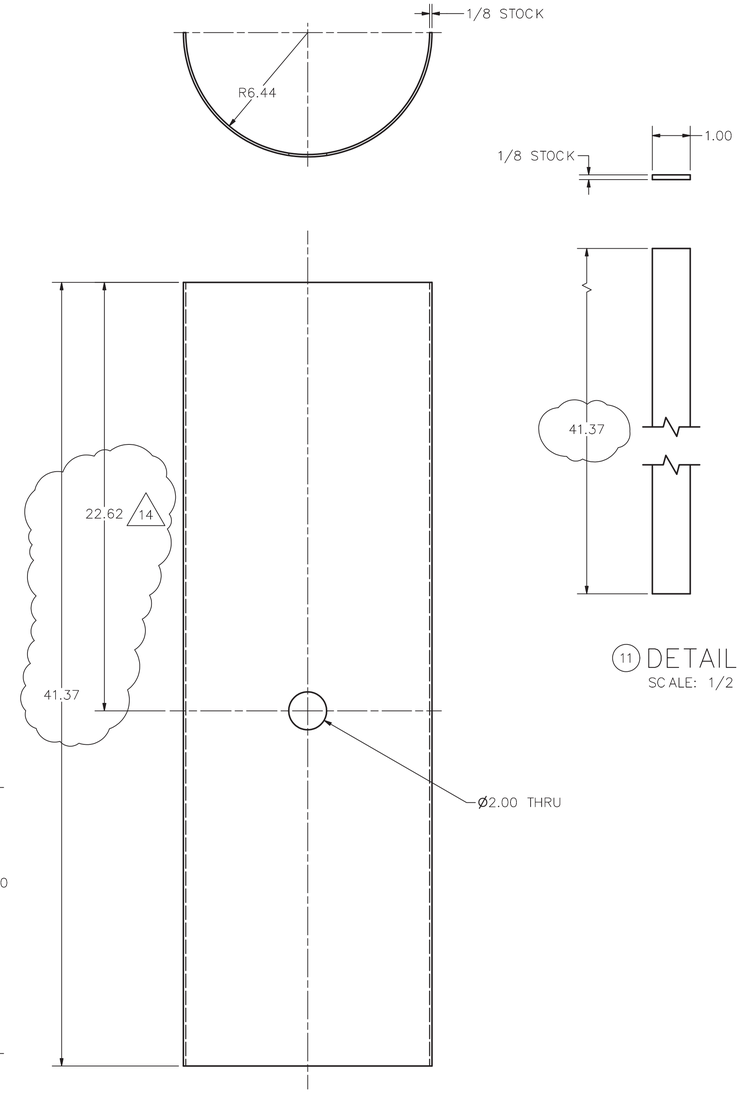

11 DETAIL

SCALE: 1/2

9 DETAIL

SCALE: 1/4

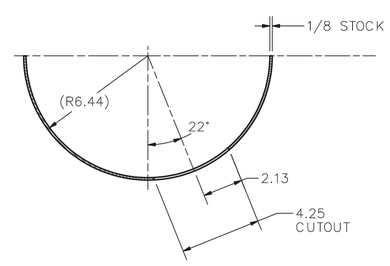

SECTION K–K

SCALE: 1/4

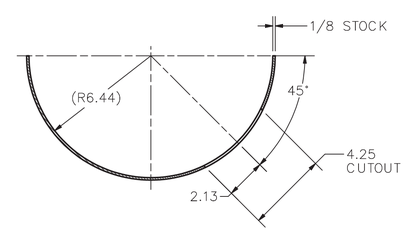

SECTION G–G

SCALE: 1/4

SIZE	INDEX CODE NUMBER				DWG–	REV
	AREA	TYPE	CL	ORIG		
D	200	0666	53	136	786869	1
SCALE: NOTED					FS	SHEET 4

ID: pennmr
Layout Name:
File: 786869-1.dwg
Path: V:_Vault\Designs\MISC\MFG\CONDENSER NEW\786869-1.dwg

INV: FMT-D1-REV 2014-01-29

REVISIONS	
REV	DESCRIPTION
1	SEE DRF-346066 INCORPORATED FDC-10284, FDC-10309 FDC-10323, FDC-10432

NOTES:

1. REMOVE ALL BURRS AND SHARP EDGES.
2. ALL MACHINED FILLET RADII .030 MAXIMUM UNLESS OTHERWISE NOTED.
3. (Q) FINAL ASSEMBLY SHALL BE FREE OF DIRT, CHIPS, WELDING FLUX, SLAG, SCALE OIL, GREASE, ETC. PERFORM A VISUAL INSPECTION ON THE FINAL ASSEMBLY PER ASTM A380, PARA 7.2.1 FOR OFF-SITE FABRICATION OR FINAL ASSEMBLY SHALL MEET CLEANLINESS REQUIREMENTS OF STD-7022, LEVEL D FOR ON-SITE FABRICATION.
4. WELDING SHALL BE PERFORMED IN ACCORDANCE WITH ASME B&PV CODE, SECTION IX USING ITEM 9 FOR OFF-SITE FABRICATION OR WELD PER INL WELD PROCEDURE SPECIFICATION S2.0 USING ITEM 9 FOR ON-SITE FABRICATION.
5. (Q) VISUALLY INSPECT FINAL PASS OF ALL WELDS. ACCEPTANCE CRITERIA SHALL BE:

   NO CRACKS.

   COMPLETE FUSION SHALL EXIST BETWEEN WELD METAL AND BASE METAL UNDERCUT SHALL NOT EXCEED 0.01" FOR MATERIAL 3/16". FOR MATERIAL 3/16" AND THICKER, UNDERCUT NOT TO EXCEED 1/32".

   FOR ALL WELDS, THE SUM OF VISIBLE POROSITY 1/32" OR GREATER IN DIAMETER SHALL NOT EXCEED 3/8" IN ANY LINEAR INCH OF WELD AND SHALL NOT EXCEED 3/4" IN ANY 12" LENGTH OF WELD.

   ALL CRATERS SHALL BE FILLED TO THE FULL CROSS-SECTION OF THE WELD EXCEPT FOR ENDS OF FILLET WELDS OUTSIDE THEIR EFFECTIVE LENGTH.

   FILLET WELDS SHALL BE AT LEAST THE SIZE SPECIFIED IN THE WELD SYMBOL.
6. TORQUE 5/16" BOLTS TO 11 FT LBS (+1/-0 FT LBS).
7. VERIFY WITH CONDENSER DIMENSIONS.

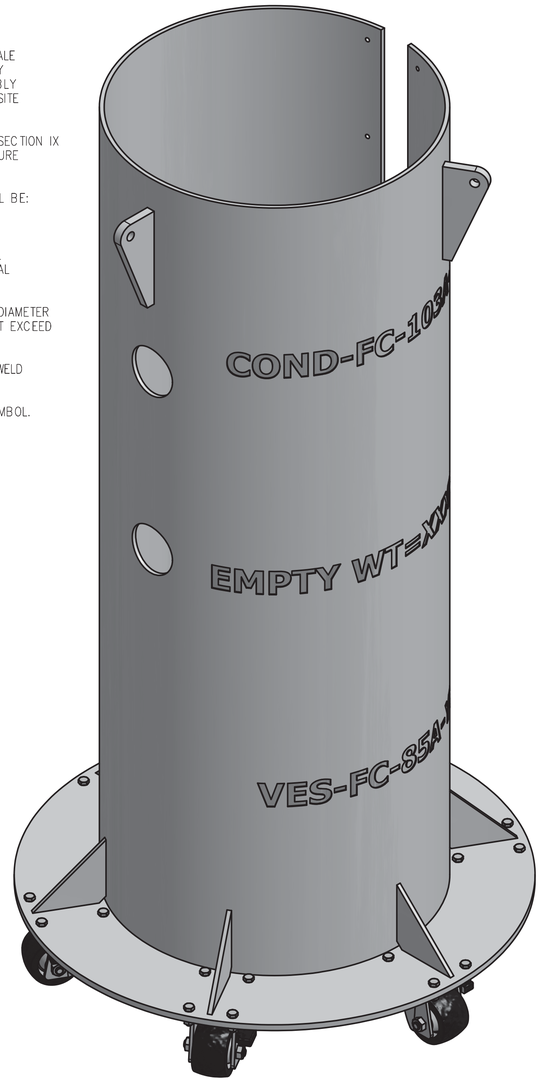

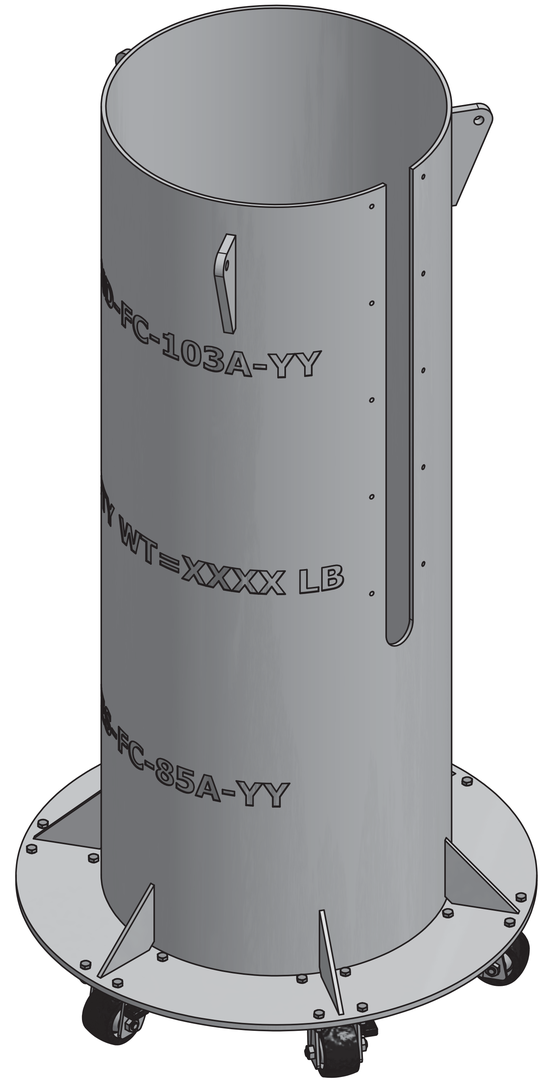

3D VIEW
(SHOWN FOR CLARITY)
SCALE: NONE

-0 ASSEMBLY

Randy Eastman
CWI
2015.08.05

PROFESSIONAL ENGINEER REGISTERED 4307 STATE OF IDAHO RANDY EASTMAN

I CERTIFY THAT THIS DRAWING REFLECTS THE CURRENT CONSTRUCTED CONDITION AS OF 7-15-15

	1	3	-10	SHIELD PLATE	PLATE, 304 OR 304L SST ASTM A240	10
	AR	3		WELD FILLER METAL	ER 308 OR 308L AWS 5.9	9
	24	3		NUT, HEX 5/16-18 UNC	GRADE 8 SST ASTM A194	8
	24	3		WASHER, FLAT 5/16 DIA	TYPE 3 ASTM F436	7
	24	3		BOLT, HEX HD 5/16-18UNC X 1 LG.	GRADE B8 SST ASTM A193	6
	6	3	4937T14	CASTER, HEAVY DUTY, LOW PROFILE 3" X 1 13/16" NYLON WHEEL WITH BRAKE 1000 LB CAP.	McMASTER-CAR	5
	6	3	-4	GUSSET	PLATE, 304 OR 304L SST ASTM A 240	4
	3	3	-3	LIFTING LUG	PLATE, 304 OR 304L SST ASTM A240	3
	1	3	-2	BOTTOM PLATE	PLATE, 304 OR 304L SST ASTM A240	2
	1	3	-1	OUTER SHIELDING BODY	PLATE, 304 OR 304L SST ASTM A240	1
		3	-0	ASSEMBLY		0
	-0					
QTY REQD		QUAL LEVEL	PART OR IDENTIFYING NO.	NOMENCLATURE OR DESCRIPTION	MATERIAL/SPECIFICATION OR VENDOR NAME	ITEM NO.

PARTS LIST

INSPECTION REQUIREMENTS	-0	786868
QC REQUIRED	DASH NO.	NEXT ASSY
(Q) DENOTES Q/C INSP. REQD.	APPLICATION	

DIMENSIONING AND SYMBOLOGY PER ASME Y14.5-2009 AND STD-11

UNLESS OTHERWISE SPECIFIED

SURFACE ROUGHNESS 125

DIMENSIONS AND TOLERANCES ARE IN INCHES

TOLERANCES .X ± .1
DECIMALS .XX ± .03
.XXX ± .010
FRACTIONS ± 1/8
ANGULAR ± 2°

DO NOT SCALE DRAWING

SIGNATURES/DATES APPLY TO CURRENT RELEASE ONLY	SIGN AND DATE
DESIGN: R. CAMPBELL	Rodney C. Campbell HukariAscendent 2015.08.05 14:49:28 -06'00'
DRAFTER: O. MORGAN	DRIN MORGAN URS 2015.08.05 14:20:43 -06'00'
TECHNICAL CHECK: T. BURNETT P.E.	Troy P. Burnett Walsh Engineering 2015.08.05 15:14:54 -06'00'
ENG GROUP SUPERVISOR: R. EASTMAN P.E.	Randy Eastman CWI 2015.08.05 15:16:22 -06'00'
DESIGN LEAD/AUTHORITY: D. MORGAN	David Morgan CWI 2015.08.05 14:54:50 -06'00'
DRAFTING CHECK/ EFFECTIVE DATE: S. BERTHELSON	Shawn Berthelson CWI 2015.08.05 17:21:25 -06'00'
PROJECT NUMBER: 31720	
DRF NUMBER: 343891	

Idaho Cleanup Project CH2M•WG IDAHO, LLC

CPP-666
RH-TRU DISTILLATION SYSTEM
CONDENSER / COLLECTION VESSEL
OUTER SHELL ASSEMBLY

SIZE	INDEX CODE NUMBER				DWG-	REV
	AREA	TYPE	CL	ORIG		
D	200	0666	53	136	786870	1
SCALE: NOTED					FS	SHEET 1 OF 3

File: 786870-1.dwg
Path: \\A\ Vault\Designs\MISC\MFC\CONDENSER NEW\786870-1.dwg
Layout Name:
ID: pennmr

INV: FMT-D1-REV 2014-01-29

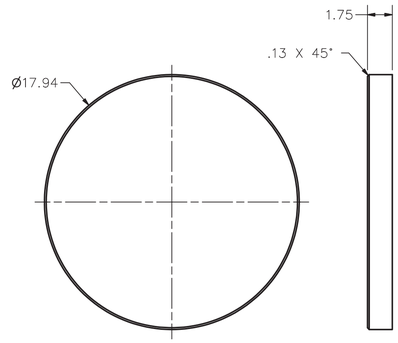

10 DETAIL
SCALE: 3/16

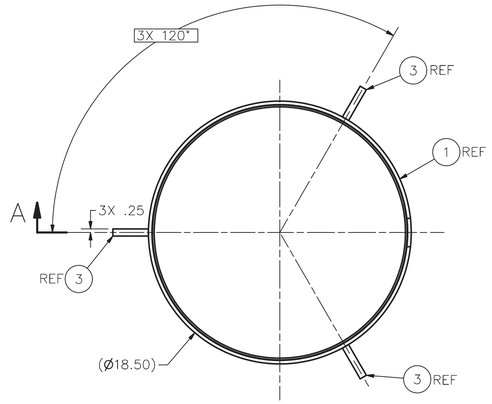

BOTTOM FLANGE, WHEELS
AND BOLTING NOT SHOWN
FOR CLARITY

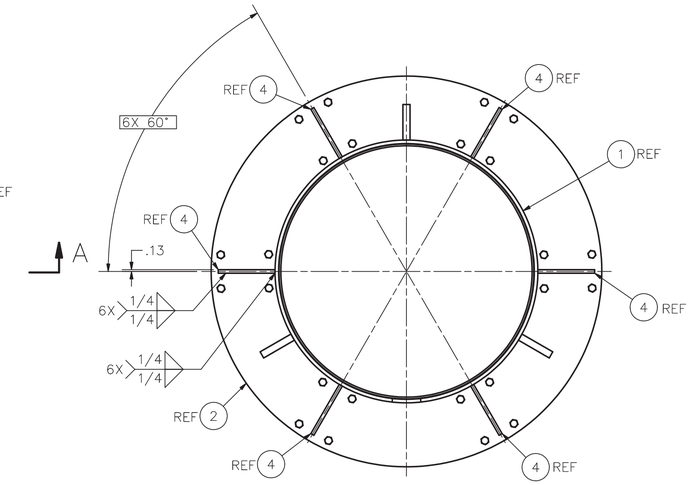

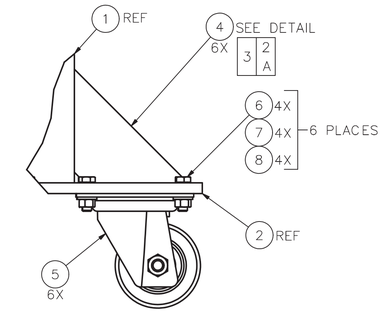

VIEW C
SCALE: 3/8

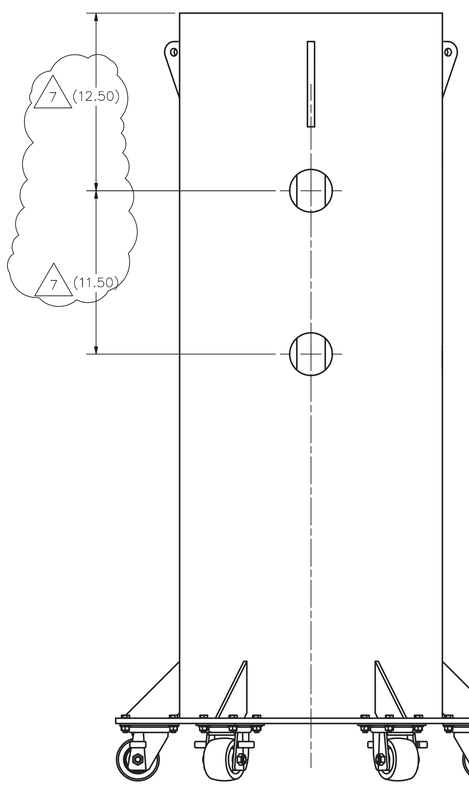

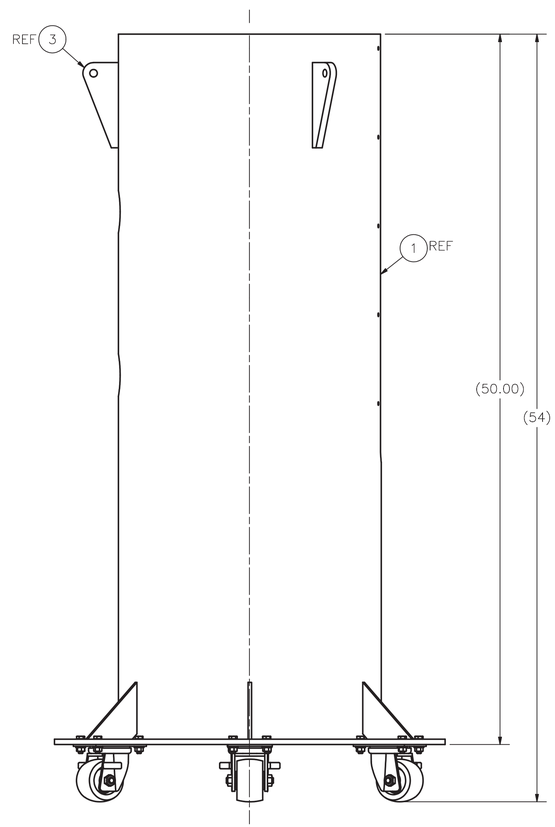

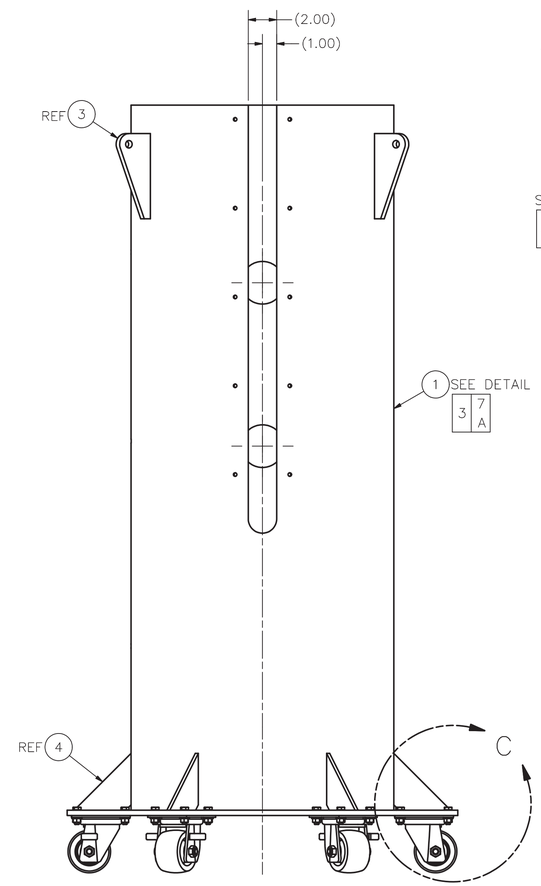

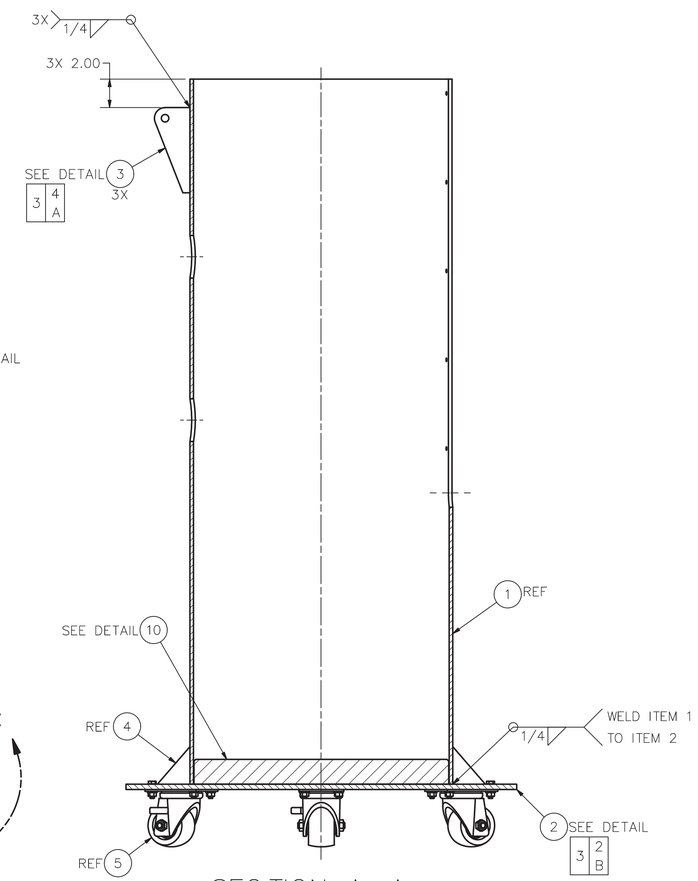

SECTION A–A
SCALE: 3/16

–0 ASSEMBLY
SCALE: 3/16

SIZE	INDEX CODE NUMBER				DWG–	REV
	AREA	TYPE	CL	ORIG		
D	200	0666	53	136	786870	1
SCALE: NOTED					FS	SHEET 2

File: 786870-1.dwg
Path: \A_Vault\Designs\MISC\MFG\CONDENSER NEW\786870-1.dwg
Layout Name:
ID: pennmr

INV: FMT-D1-REV 2014-01-29

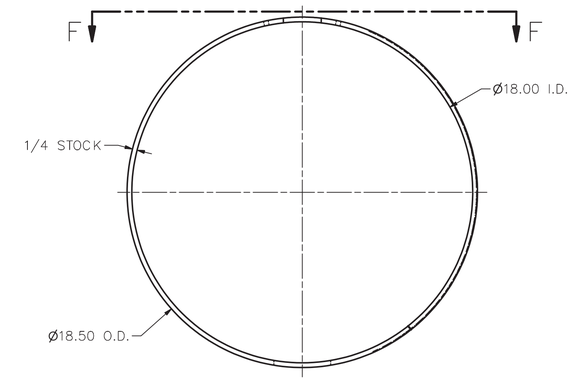

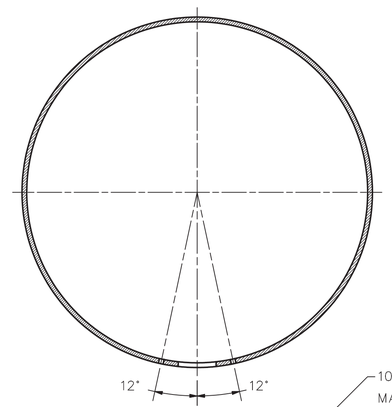

SECTION J–J
SCALE: 1 / 4

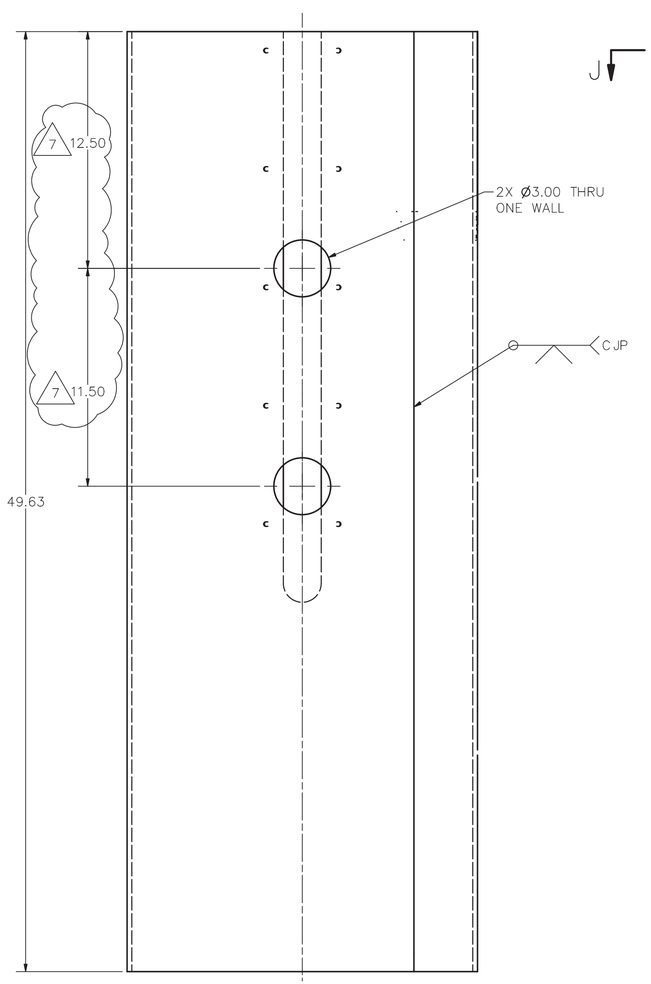

1 DETAIL
SCALE: 1/4

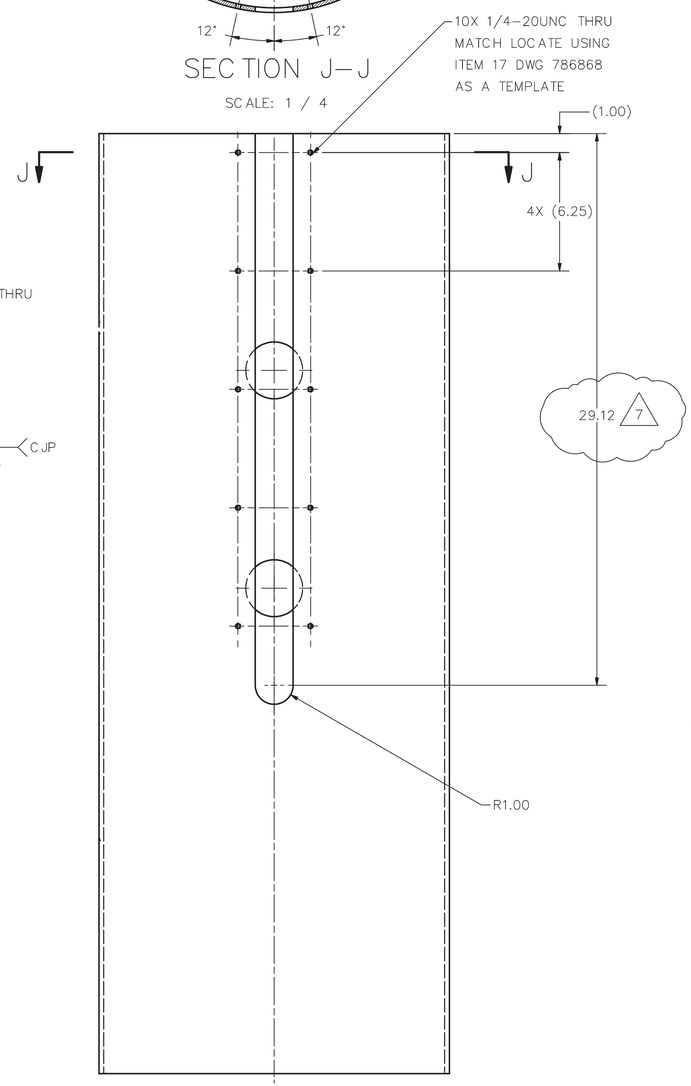

VIEW F
SCALE: 1/4

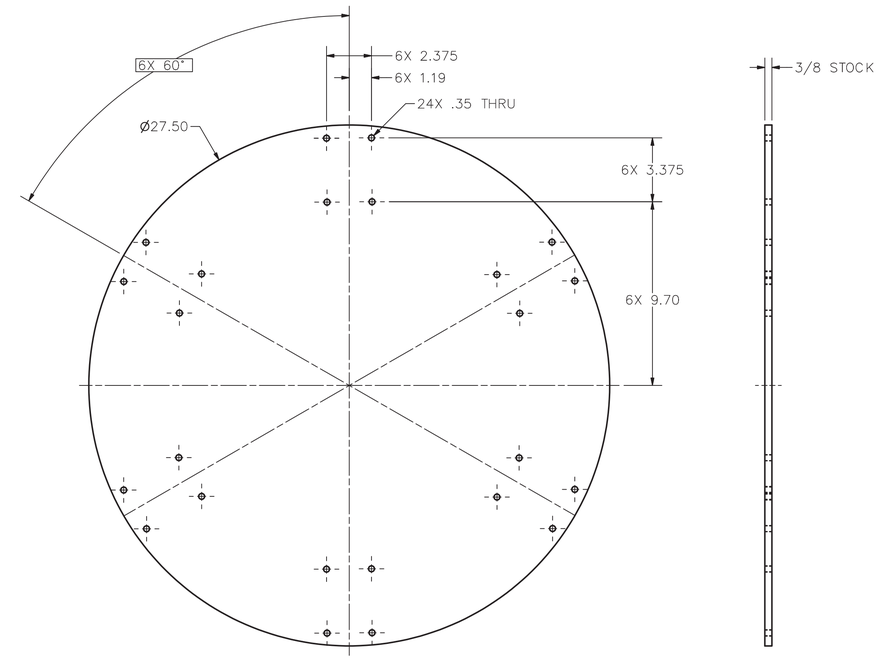

2 DETAIL
SCALE: 1/4

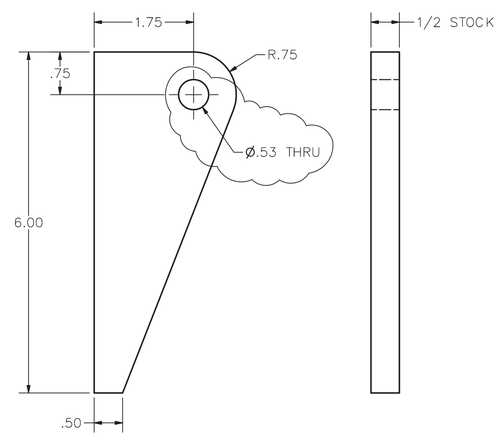

3 DETAIL
SCALE: 3/4

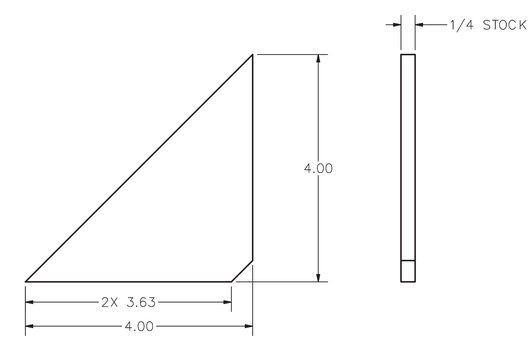

4 DETAIL
SCALE: 3/4

SIZE	INDEX CODE NUMBER				DWG–	REV
	AREA	TYPE	CL	ORIG		
D	200	0666	53	136	786870	1
SCALE: NOTED					FS	SHEET 3

File: 786870-1.dwg
Path: Y:_Vault\Designs\MISC MFG\CONDENSER NEW\786870-1.dwg
Layout Name:
ID: pennmr

INV: FMT-D1-REV 2014-01-29

REVISIONS	
REV	DESCRIPTION

NOTES:

1. REMOVE ALL BURRS AND SHARP EDGES.
2. ALL MACHINED FILLET RADII .030 MAXIMUM UNLESS OTHERWISE NOTED.
3. (Q) FINAL ASSEMBLY SHALL BE FREE OF DIRT, CHIPS, WELDING FLUX, SLAG, SCALE OIL, GREASE, ETC. FOR OFF-SITE FABRICATION OR FINAL ASSEMBLY SHALL MEET CLEANLINESS REQUIREMENTS OF STD-7022, LEVEL C FOR ON-SITE FABRICATION.

4 WELDING SHALL BE PERFORMED IN ACCORDANCE WITH ASME B & PV CODE, SECTION IX USING ITEM 4 FOR OFF-SITE FABRICATION OR WELD PER INL WELD PROCEDURE SPECIFICATION S2.0 USING ITEM 4 FOR ON-SITE FABRICATION.

(Q) 5 VISUALLY INSPECT ALL WELDS IN ACCORDANCE WITH ASME B&PV CODE, SECTION V, ARTICLE 9 FOR OFF-SITE FABRICATION OR VISUALLY INSPECT ALL WELDS IN ACCORDANCE WITH TPR-4981 "VISUAL EXAMINATION" FOR PRESSURE VESSELS. ACCEPTANCE CRITERIA SHALL BE PER APPENDIX B, "ACCEPTANCE CRITERIA FOR ASME CODE, SECTION VIII, DIVISION 1 WELDS, BASE MATERIALS AND BRAZING" FOR ON-SITE FABRICATION.

(Q) 6. LIQUID PENETRANT EXAMINATION FOR OFF-SITE FABRICATION SHALL BE PERFORMED IN ACCORDANCE WITH THE B&PV CODE SECTION VIII ARTICLE 6. ACCEPTANCE CRITERIA SHALL BE:

A. ALL SURFACES TO BE EXAMINED SHALL BE FREE OF:
   I. RELEVANT LINEAR INDICATIONS
   II. RELEVANT ROUNDED INDICATIONS GREATER THAN 5 MM (3/16")
   III. FOUR OR MORE RELEVANT ROUNDED INDICATIONS IN A LINE SEPARATED BY 1.5 MM (1/16") OR LESS, EDGE-TO-EDGE.

B. CRACK LIKE INDICATIONS DETECTED, IRRESPECTIVE OF SURFACE CONDITIONS, ARE UNACCEPTABLE.

LIQUID PENETRANT EXAMINATION FOR ON-SITE FABRICATION SHALL BE PERFORMED ON ALL WELDS IN ACCORDANCE WITH TPR-4975 "LIQUID PENETRANT EXAMINATON," APPENDIX H, WITH ACCEPTANCE PER APPENDIX H, "ACCEPTANCE CRITERIA FOR ASME B31.3 POWER PIPING WELDS. " USE LIQUID PENETRANT EXAMINATION OF ROOT AND FINAL PASS FOR BUTT WELDS AND FINAL PASS FOR FILLET WELDS .

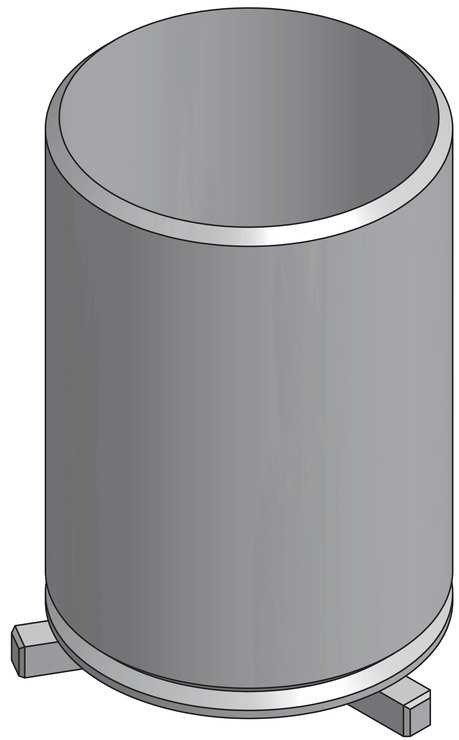

3D VIEW
(SHOWN FOR CLARITY)
SCALE: NONE

-0 ASSEMBLY

QTY REQD -0	QUAL LEVEL	PART OR IDENTIFYING NO.	NOMENCLATURE OR DESCRIPTION	MATERIAL/SPECIFICATION OR VENDOR NAME	ITEM NO.
AR	3		WELD FILLER METAL	ER 308 OR 308L SST AWS A5.9	4
3	3	-3	FOOT	BAR OR PLATE, 304 OR 304L SST ASTM A276 OR A240	3
1	3	-2	BOTTOM HEAD	PLATE, 304 OR 304L SST ASTM A240	2
1	3	-1	COLLECTION TANK BODY	PIPE, 304 OR 304L SST ASTM A312	1
	3	-0	ASSEMBLY		0

PARTS LIST

Randy Eastman
CWI
2014.12.09 08:41:03 -07'00'

PROFESSIONAL ENGINEER REGISTERED 4307 STATE OF IDAHO RANDY EASTMAN

INSPECTION REQUIREMENTS
QC REQUIRED
(Q) DENOTES Q/C INSP. REQD.

DASH NO. -0
NEXT ASSY 786869
APPLICATION

DIMENSIONING AND SYMBOLOGY PER ASME Y14.5-2009 AND STD-11
UNLESS OTHERWISE SPECIFIED
SURFACE ROUGHNESS 125
DIMENSIONS AND TOLERANCES ARE IN INCHES
TOLERANCES .X ± .1
DECIMALS .XX ± .03
.XXX ± .010
FRACTIONS ± 1/8
ANGULAR ± 2°
DO NOT SCALE DRAWING

SIGNATURES/DATES APPLY TO CURRENT RELEASE ONLY — SIGN AND DATE

DESIGN:	R. CAMPBELL	Rodney C. Campbell HukariAscendent 2014.12.09 08:34:02 -07'00'
DRAFTER:	O. MORGAN	ORIN MORGAN URS 2014.12.09 08:11:49 -07'00'
TECHNICAL CHECK:	T. BURNETT P.E.	Troy P. Burnett Walsh Engineering 2014.12.09 08:46:21 -07'00'
ENG GROUP SUPERVISOR:	R. EASTMAN P. E.	Randy Eastman CWI 2014.12.09 08:40:54 -07'00'
DESIGN LEAD/AUTHORITY:	D. MORGAN	David Morgan CWI 2014.12.09 08:28:17 -07'00'
DRAFTING CHECK/ EFFECTIVE DATE:	S. BERTHELSON	Shawn Berthelson CWI 2014.12.09 09:56:27 -07'00'

PROJECT NUMBER: 31720
DRF NUMBER: 343891

Idaho Cleanup Project CH2M•WG IDAHO, LLC

CPP-666
RH-TRU DISTILLATION SYSTEM
COLLECTION TANK ASSEMBLY
VES-FC-85A

SIZE	INDEX CODE NUMBER: AREA	TYPE	CL	ORIG	DWG-	REV
D	200	0666	53	136	786871	

SCALE: NOTED
FS SHEET 1 OF 2

File: 789018.dwg
Path: \\A\ Vault\Designs\MISC\MFC\CONDENSER NEW\789018.dwg
Layout Name:
ID: pennmr

INV: FMT-D1-REV 2014-01-29

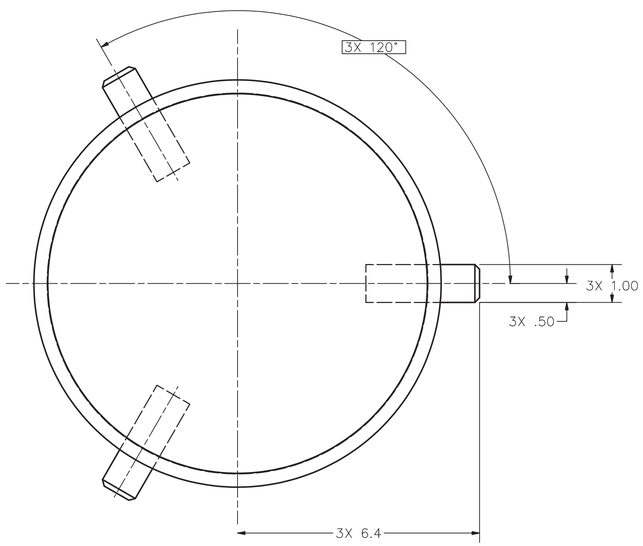

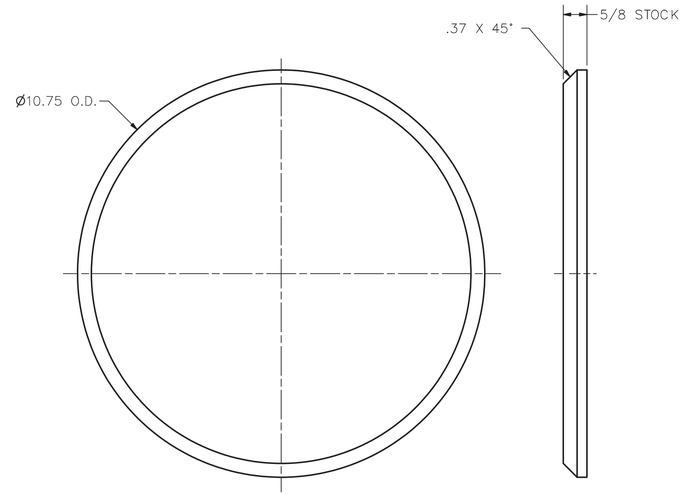

2 DETAIL
SCALE: 1/2

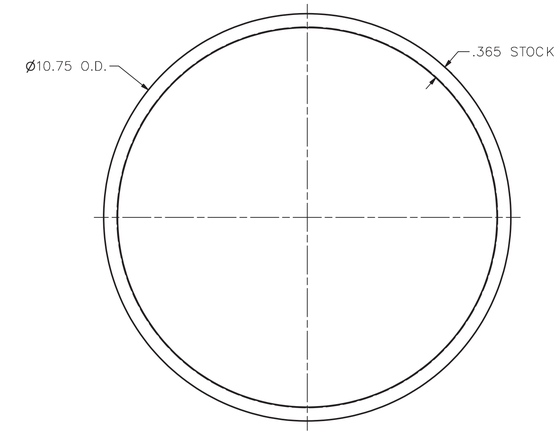

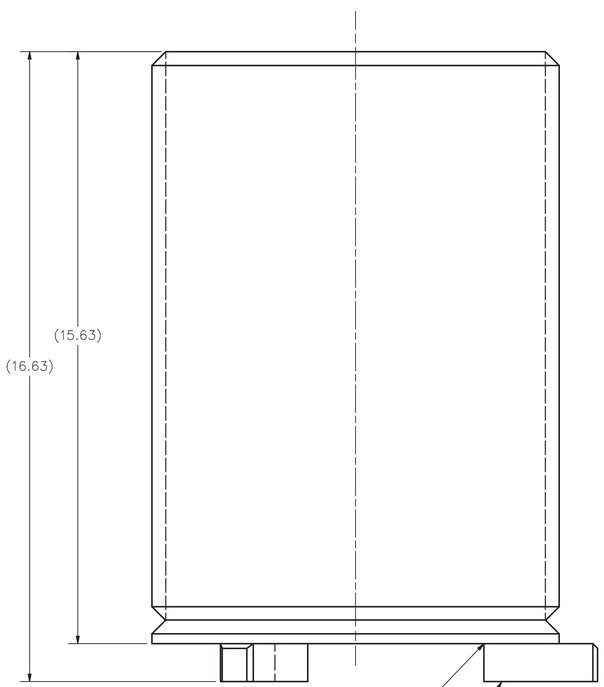

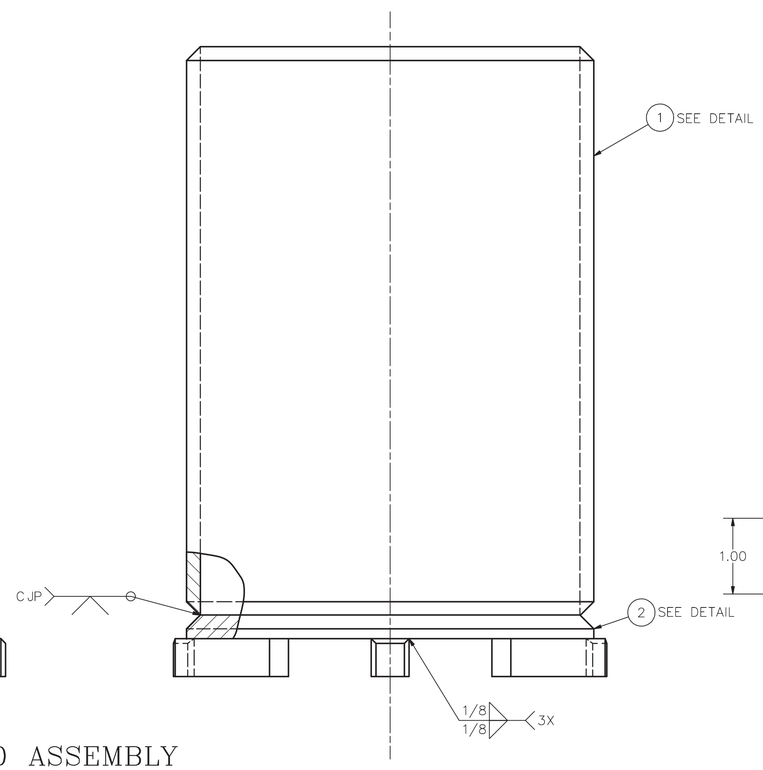

-0 ASSEMBLY
SCALE: 1/2

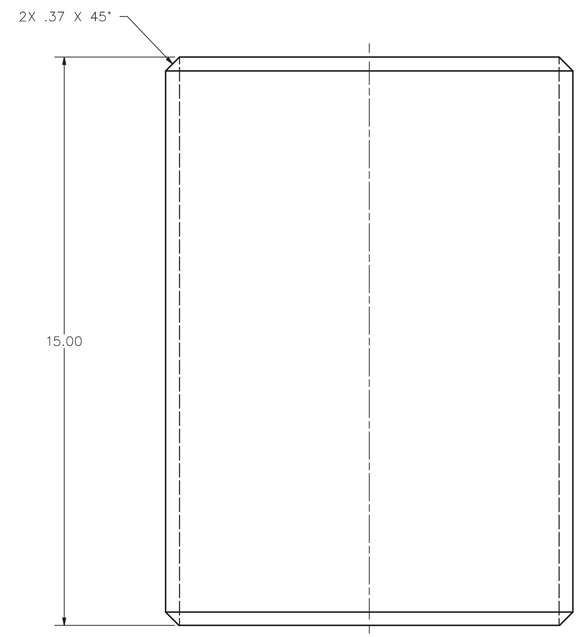

1 DETAIL
SCALE: 1/2

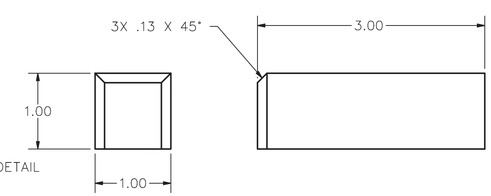

3 DETAIL
SCALE: 1/1

SIZE	INDEX CODE NUMBER				DWG-	REV
	AREA	TYPE	CL	ORIG		
D	200	0666	53	136	786871	
SCALE: NOTED					FS	SHEET 2

File: 789018.dwg
Path: V:_Vault\Designs\MISC\MFG\CONDENSER NEW\789018.dwg
Layout Name:
ID: pennmr

INV: FMT-D1-REV 2014-01-29

REVISIONS	
REV	DESCRIPTION
1	SEE DRF-346066 INCORPORATED FDC-10336, FDC-10340

NOTES:

1. REMOVE ALL BURRS AND SHARP EDGES.
2. ALL MACHINED FILLET RADII .030 MAXIMUM UNLESS OTHERWISE NOTED.
3. (Q) FINAL ASSEMBLY SHALL MEET CLEANLINESS REQUIREMENTS OF STD-7022, LEVEL C.
4. MARK PER STD-7006-2A OR STD-7006-2D IN 1/2" HIGH CHARACTERS WITH INFORMATION AS SHOWN WHERE "XX" IS THE UNIQUE NUMBER ASSIGNED TO EACH ASSEMBLY BUILT AND "YY" IS THE MEASURED WEIGHT OF THE -0 ASSEMBLY TO THE NEAREST POUND. LOCATE APPROXIMATELY WHERE SHOWN. FILL CHARACTERS WITH SANFORD T.E.C. MARKER #13401 OR #13501, ITW DYMON FORMULA Q404 INK OR OTHER HIGH-PURITY LOW-CHLORIDE BLACK INK THAT COMPLIES WITH ASTM C1217-00 OR RDT F7-3T. DO NOT APPLY VARNISH OVER MARKING.
5. (Q) VERIFY MARKINGS HAVE BEEN ACCURATELY APPLIED AND RECORD THE MEASURED WEIGHT.
6. WELD STAINLESS TO STAINLESS PER INL WELD PROCEDURE SPECIFICATION S2.0 USING WELD FILLER METAL, ITEM 10.
7. (Q) VISUALLY INSPECT ALL WELDS IN ACCORDANCE WITH ASME B & PV CODE, SECTION V, ARTICLE 9.
8. (Q) LIQUID PENETRANT EXAMINATION SHALL BE PERFORMED ON ALL WELDS IN ACCORDANCE WITH ASME B & PV CODE, SECTION V, ARTICLE 6.
9. (Q) COMPLETED ASSEMBLY SHALL UNDERGO A PNEUMATIC LEAK TEST IN ACCORDANCE WITH ASME B & PV CODE SECTION V, ARTICLE 10 AT A PRESSURE OF 16.5 TO 18.5 PSIG. "SNOOP" ALL CONNECTIONS AND WELD JOINTS FOR LEAKS. PRESSURE DROP SHALL NOT EXCEED 0.1 PSIG OVER A 10 MINUTE PERIOD.
10. DESIGN TEMPERATURE: 300° F.
11. DESIGN PRESSURE: FULL VACUUM TO 15 PSIG.
12. COLD TRAP FILTER F-FC-221 DOES NOT FALL WITHIN ASME B & PV CODE, SECTION VIII REQUIREMENTS. HOWEVER, THE FILTER HAS BEEN DESIGNED IN ACCORDANCE WITH THE B & PV CODE AS BEST ENGINEERING PRACTICE. SEE EDF-10661 "RH-TRU DISTILLATION & FACILITY MODIFICATIONS SDS COLD TRAP FILTER DESIGN CALCULATIONS" FOR THE ANALYSIS.

-0 ASSEMBLY
SCALE: 3/4

Randy Eastman
CWI
2015.08.05

PROFESSIONAL ENGINEER REGISTERED 4307 STATE OF IDAHO RANDY EASTMAN

I CERTIFY THAT THIS DRAWING REFLECTS THE CURRENT CONSTRUCTED CONDITION AS OF 7-15-15

INSPECTION REQUIREMENTS	-0	FINAL
QC REQUIRED	DASH NO.	NEXT ASSY
(Q) DENOTES Q/C INSP. REQD.	APPLICATION	

-1 QTY REQD	-0 QTY REQD	QUAL LEVEL	PART OR IDENTIFYING NO.	NOMENCLATURE OR DESCRIPTION	MATERIAL/SPECIFICATION OR VENDOR NAME	ITEM NO.
AR	AR	3		WELD FILLER METAL	ER308 OR 308L AWS/SFA 5.9	10
5		3	PALL PN: P-24-10-6-RR	METAL FILTER ELEMENT 1 1/2" NPT CONNECTION 10" LG., 2 1/2 " OD	PALL CORP	9
1		3	-8	TUBE SHEET PLATE	PLATE 304 SST ASTM A240	8
1		3	-7	TOP HEAD	TUBE WELD CAP, 10" OD. X (10 GA) .134 WALL STOCK TP 316/316L ASTM A774	7
	3	3	-6	BASE PLATE	PLATE OR BAR 304 OR 304L SST ASTM A240 OR A276	6
	3	3	-5	LEG	ANGLE 304 OR 304L SST ASTM A276	5
1	1	3	QF 40-150-LFT	KF ADAPTER HALF NIPPLE KF40 FLANGE	KURT J. LESKER, CO.	4
	1	3		BOTTOM HEAD	TUBE WELD CAP, 10" OD. X (10 GA) .134 WALL TP 316/316L ASTM A774	3
	1	3	-2	BODY	TUBE SEAMLESS 304 OR 304L SST ASTM A213 OR A269	2
	1	3	-1	HEAD ASSEMBLY		1
		3	-0	ASSEMBLY		0

PARTS LIST

DIMENSIONING AND SYMBOLOGY PER ASME Y14.5-2009 AND STD-11
UNLESS OTHERWISE SPECIFIED
SURFACE ROUGHNESS 125
DIMENSIONS AND TOLERANCES ARE IN INCHES
TOLERANCES .X ± .1
DECIMALS .XX ± .03
.XXX ± .010
FRACTIONS ± 1/8
ANGULAR ± 2°
DO NOT SCALE DRAWING

SIGNATURES/DATES APPLY TO CURRENT RELEASE ONLY	SIGN AND DATE
DESIGN: R. CAMPBELL	Rodney C. Campbell HukariAscendent 2015.08.05 14:48:14 -06'00'
DRAFTER: O. MORGAN	ORIN MORGAN URS 2015.08.05 14:26:57 -06'00'
TECHNICAL CHECK: N. SEAVER	Randy Eastman CWI 2015.08.05 15:24:04 -06'00'
ENG GROUP SUPERVISOR: R. EASTMAN, P.E.	Randy Eastman CWI 2015.08.05 15:23:55 -06'00'
DESIGN LEAD/AUTHORITY: D. MORGAN	David Morgan CWI 2015.08.05 14:53:37 -06'00'
DRAFTING CHECK/ EFFECTIVE DATE: S. BERTHELSON	Shawn Berthelson CWI 2015.08.05 17:21:38 -06'00'
PROJECT NUMBER: 31720	
DRF NUMBER: 342479	

Idaho Cleanup Project CH2M•WG IDAHO, LLC

CPP-666
RH-TRU DISTILLATION SYSTEM
COLD TRAP FILTER ASSEMBLY
F-FC-221

SIZE	INDEX CODE NUMBER				DWG-	REV
	AREA	TYPE	CL	ORIG		
D	200	0666	51	136	785276	1
SCALE: NOTED					FS	SHEET 1 OF 3

File: 785276-01.dwg
Path: V:_Vault\Designs\MISC\MFC\gold_trap\785276-01.dwg
Layout Name:
ID: OMORGAN

INV: FMT-D1-REV 2014-01-29

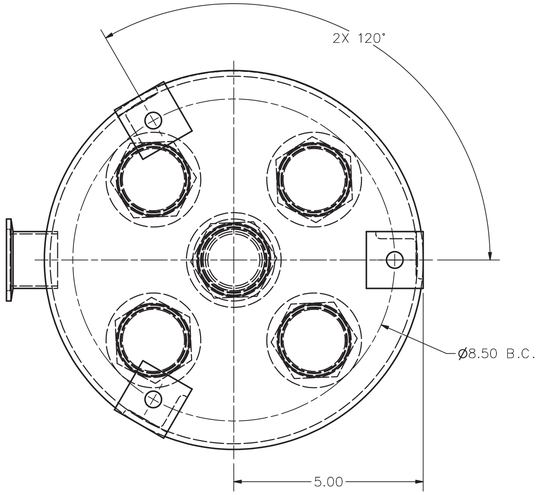

VIEW A–A
SCALE: 1/2

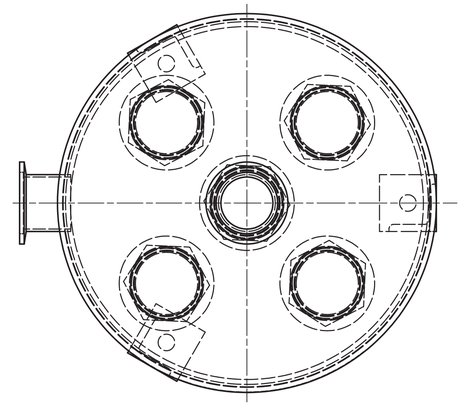

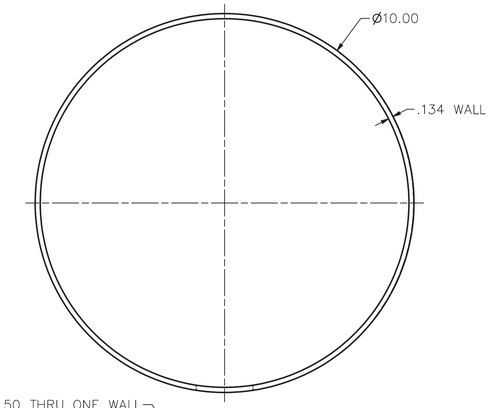

3D VIEW
(SHOWN FOR CLARITY)
SCALE: NONE

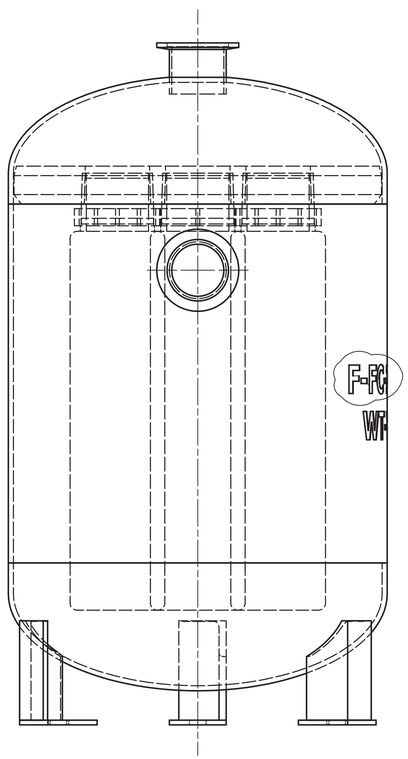

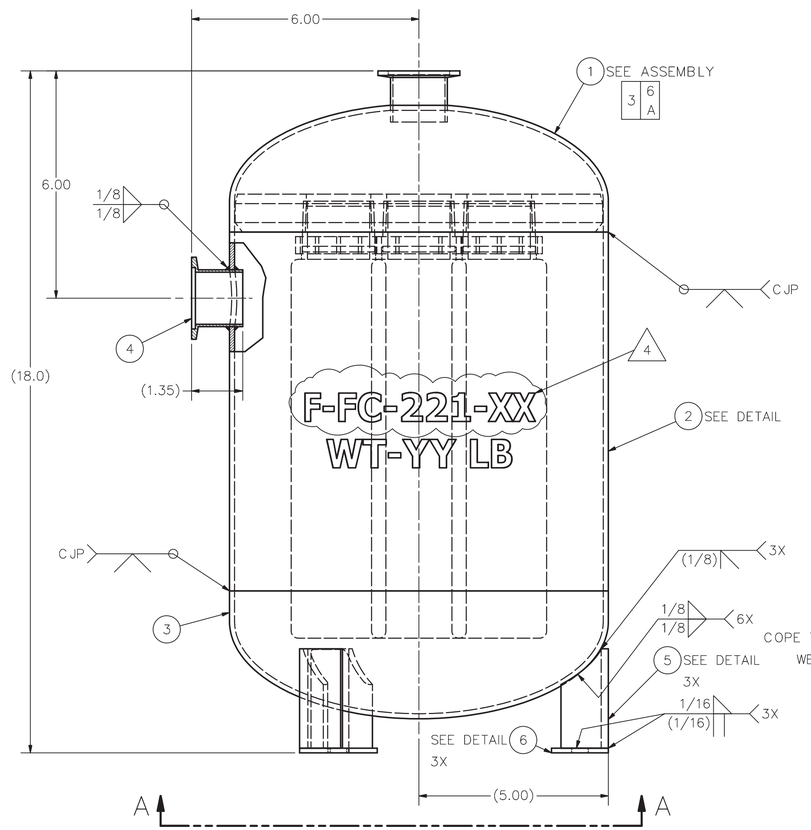

–0 ASSEMBLY
SCALE: 1/2

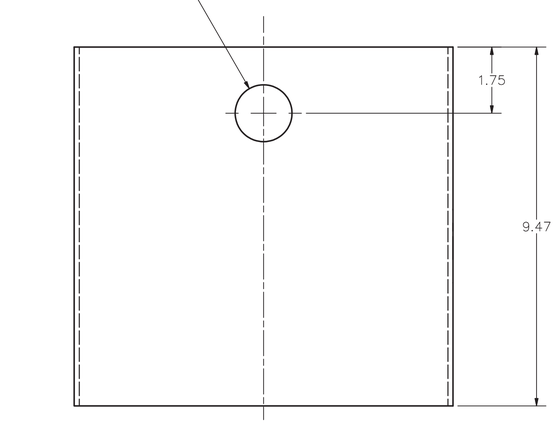

2 DETAIL
SCALE: 1/2

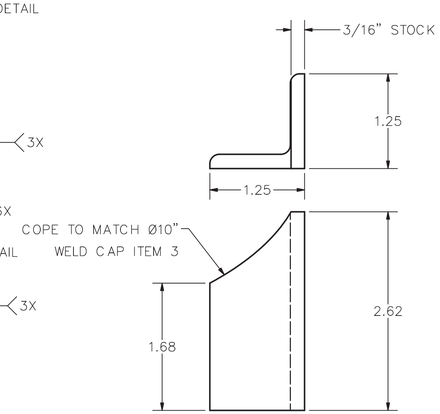

5 DETAIL
SCALE: 1/1

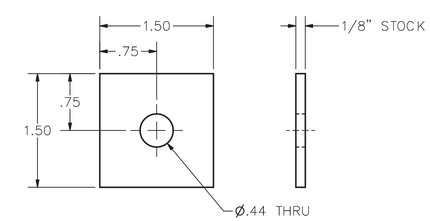

6 DETAIL
SCALE: 1/1

SIZE	INDEX CODE NUMBER				DWG–		REV
	AREA	TYPE	CL	ORIG			
D	200	0666	51	136	785276		1
SCALE: NOTED					FS	SHEET 2	

ID: OMORGAN
Layout Name:
File: 785276-01.dwg
Path: V:_Vault\Designs\MISC\MFC\cold_trap\785276-01.dwg

INV: FMT-D1-REV 2014-01-29

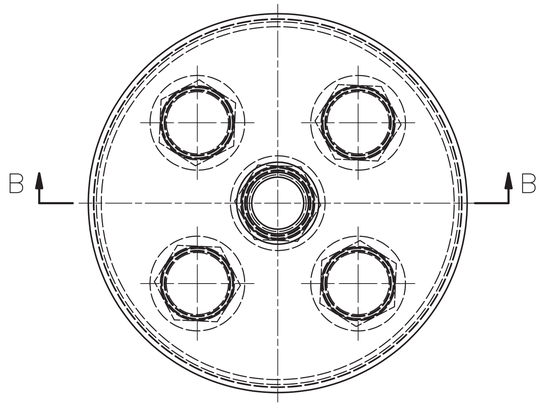

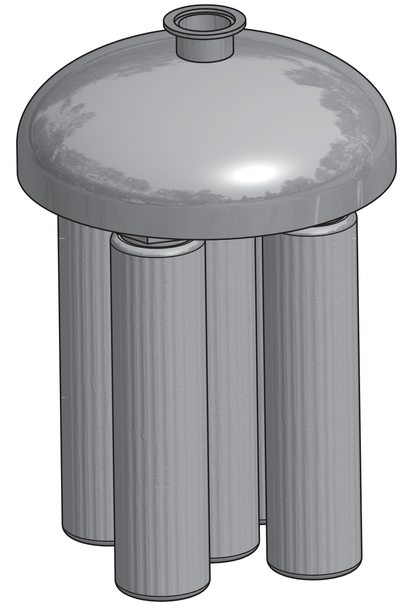

3D VIEW

(SHOWN FOR CLARITY)
SCALE: NONE

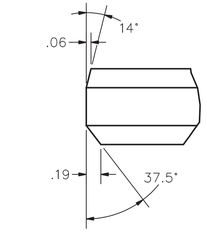

DETAIL D

SCALE: 1/1

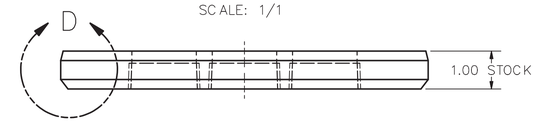

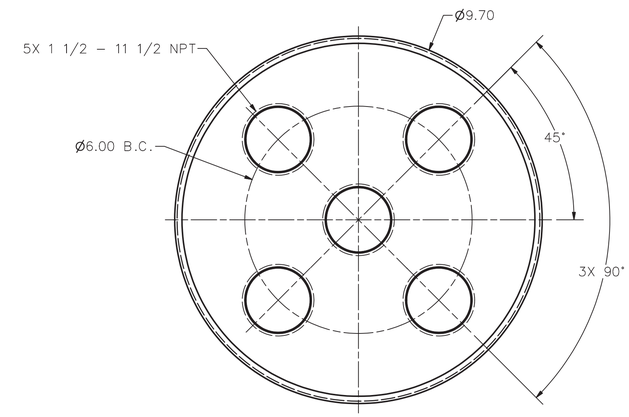

8 DETAIL

SCALE: 1/2

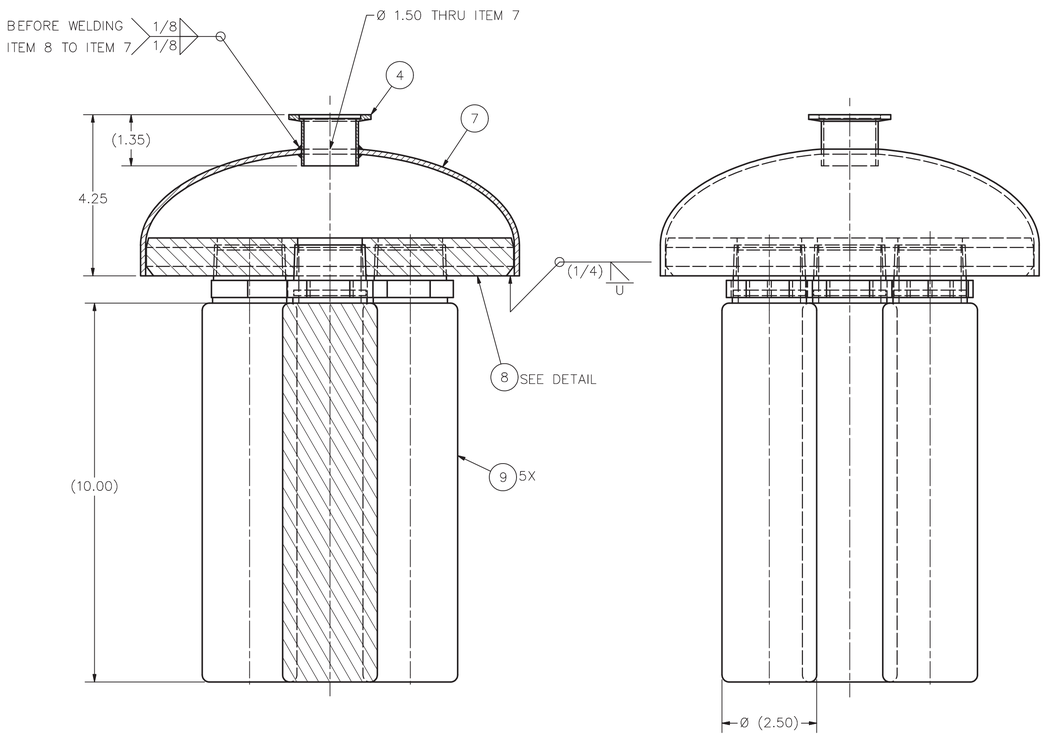

SECTION B–B

SCALE: 1/2

– 1 ASSEMBLY

SCALE: 1/2

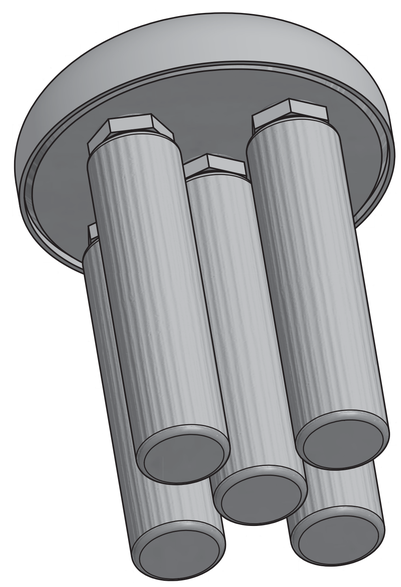

3D VIEW

(SHOWN FOR CLARITY)
SCALE: NONE

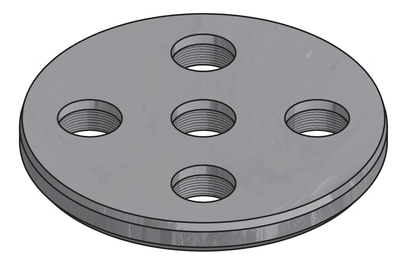

3D VIEW

(SHOWN FOR CLARITY)
SCALE: NONE

SIZE	INDEX CODE NUMBER				DWG-	REV
	AREA	TYPE	CL	ORIG		
D	200	0666	51	136	785276	1
SCALE: NOTED					FS	SHEET 3

ID: OMORGAN
Layout Name:
File: 785276-01.dwg
Path: V:\ Vault\Designs\MLS-MFC\cold trap\785276-01.dwg

FMT-D1-REV 2014-01-29

NOTES:

1. REMOVE ALL BURRS AND SHARP EDGES.
2. ALL MACHINED FILLET RADII .03 MAXIMUM UNLESS OTHERWISE NOTED.
3. (Q) FINAL ASSEMBLY SHALL BE FREE OF DIRT, CHIPS, WELDING FLUX, SLAG, SCALE OIL, GREASE, ETC. PERFORM A VISUAL INSPECTION OF THE FINAL ASSEMBLY PER ASTM A380, PARA 7.2.1.
4. WEDLING SHALL BE PERFORMED IN ACCORDANCE WITH ASME B&PV CODE, SECTION IX, USING ITEM 9. WELD PROCEDURE SPECIFICATION S2.0.
5. (Q) PERFORM VISUAL EXAMINATION OF THE FINAL PASS OF ALL WELDS IN ACCORDANCE WITH ASME B31.3, PARAGRAPH 344.2, WITH ACCEPTANCE CRITERIA IN ACCORDANCE WITH TABLE 341.3.2 FOR NORMAL FLUID SERVICE.
6. (Q) LIQUID PENETRANT EXAMINATION FOR THE ROOT AND FINAL PASS OF BUTT-WELDS AND FINAL PASS OF FILLET WELDS SHALL BE PERFORMED IN ACCORDANCE WITH ASME B31.3, PARAGRAPH 344.4 WITH ACCEPTANCE CRITERIA IN ACCORDANCE WITH TABLE 341.3.2 FOR NORMAL FLUID SERVICE.
7. COMPLETED ASSEMBLY SHALL UNDERGO A PNEUMATIC LEAK TEST IN ACCORDANCE WITH ASME B31.3 USING A DIRECT PRESSURE BUBBLE TEST AT A PRESSURE OF 15 PSIG (+0/-1 PSIG). "SNOOP" ALL CONNECTIONS AND WELD JOINTS FOR LEAKS.
8. BOLT TORQUES:
   TORQUE 5/8-11 UNC BOLTS, ITEM 15 TO 50 (+5/0) FT-LBS
9. DESIGN TEMPERATURE = 1200° F.
10. DESIGN PRESSURE = FULL VACUUM TO 15 PSIG.
11. APPLY THREAD LUBRICANT, ITEM 18, YO ALL BOLT THREADS.
12. PERFORM IN-PROCESS INSPECTION OF WELDS WHERE SPECIFIED PER ASME B31.1, PARAGRAPH 344.7 USING LIQUID PENETRANT EXAMINATION OF THE ROOT AND FINAL PASS OF BUTT-WELDS AND FINAL PASS OF FILLET WELDS.

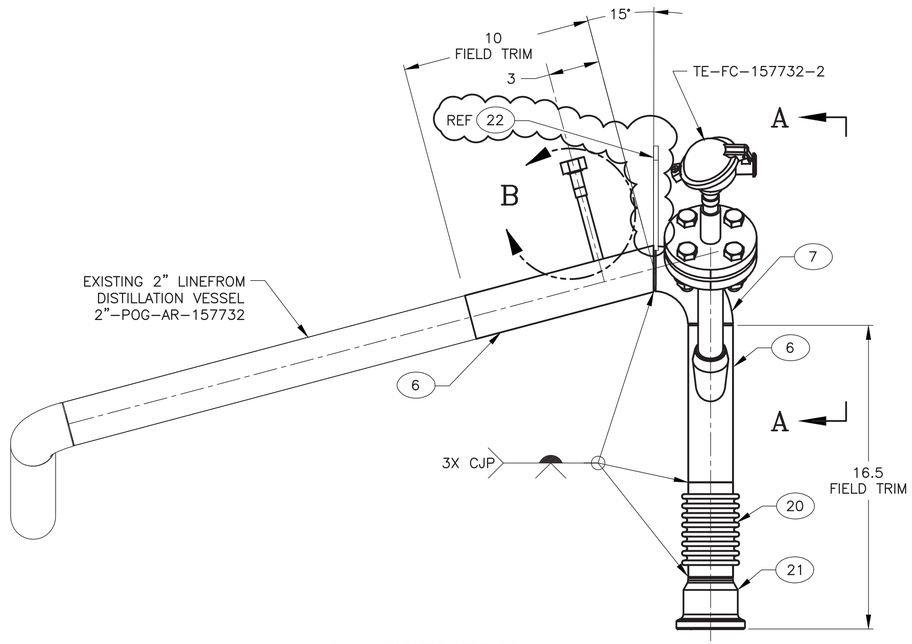

-0 ASSEMBLY
SCALE: 3/8

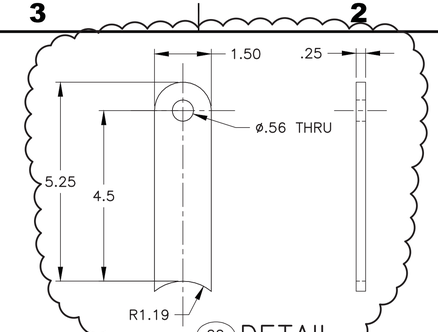

22 DETAIL
SCALE: 1/2

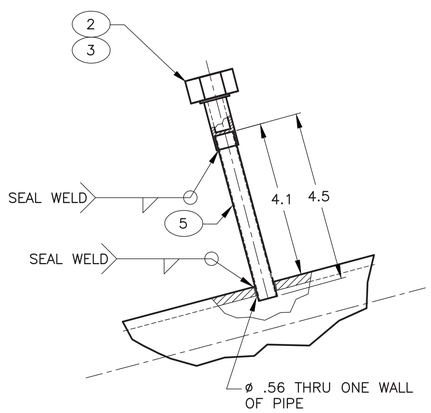

VIEW B
SCALE: 1/2

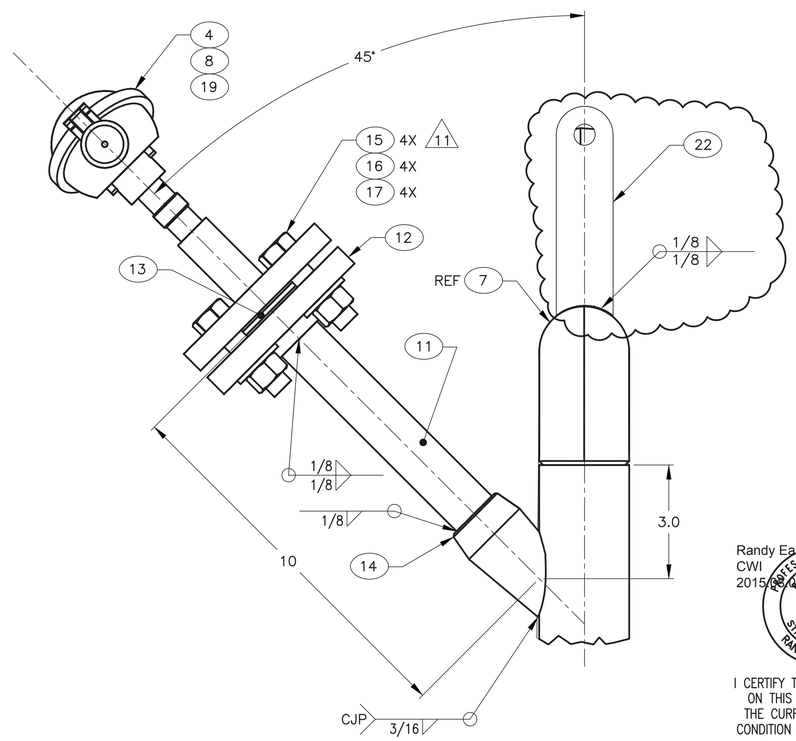

VIEW A-A
SCALE: 1/2

REVISIONS

REV	DESCRIPTION
1	SEE DRF-344903
2	INCORP'D FDC-10452, 10457, 10515, 10530 AND 10551, SEE DRF-346066

PARTS LIST

	QTY REQD	QUAL LEVEL	PART OR IDENTIFYING NO.	NOMENCLATURE OR DESCRIPTION	MATERIAL/SPECIFICATION OR VENDOR NAME	ITEM NO.
	1	3	-22	LIFTING LUG	PLATE, 304 OR 340L SST ASTM A240	22
	1	3	H90070-210	GRAYLOC HUB, BW,2 GR20, SCH 40 2.375 OD X 2.067 ID 304H SST	GRAYLOC PRODUCTS	21
	1	3	US-2-8-85S	BELLOWS EXPANSION JOINT, 2" BW ENDS, 321 SST ASTM A240-T321	U. S. BELLOWS	20
	1	3	007903252005	ROSEMONT CONNECTION HEAD	EMERSON	19
11	AR	3	77124	LOCTITE NICKEL ANTI-SEIZE THREAD LUBRICANT	LOCTITE	18
	4	3		WASHER, FLAT, 5/8	TYPE 3, CIRCULAR ASTM F436	17
	4	3		NUT, HEX, 5/8-11 UNC	GRADE 8 ASTM A194	16
	4	3		BOLT, HEX HEAD 5/8-11 UNC X 2 1/2 LONG	GRADE B8 ASTM A193	15
	1	3		LATROLET, 1", SOCKET WELD CLASS 3000, 2" PIPE RUN	304H ASTM A182	14
	1	3	H-306901	DELTA HELICOFLEX SEAL W/LIMITER SEAL TYPE HN208A	TECHNETICS GRP	13
	1	3		FLANGE, 1", 300LB RAISED FACE, SLIP-ON	304H, SST ASTM A182	12
	AR	3		PIPE, 1", SCHED 40S, SEAMLESS	304H SST ASTM A312	11
						10
	AR	3		WELD FILLER METAL	ER 308H AWS A5.9	9
	1	3	0183N21J2C30N110	TEMPERATURE SENSOR, 6" LEADS, SPRING LOADED, SINGLE ELEMENT, GROUNDED TYPE J, NIPPLE UNION, 3" EXTENSION, 11" INSERTION LENGTH	ROSEMOUNT	8
	1	3		ELBOW, 2", 90°, SCHED 40 BUTT WELD, LONG RADIUS	304H SST ASTM A403	7
	AR	3		PIPE, 2", SCHED 40, SEAMLESS	304H SST ASTM A312	6
	AR	3		TUBE, 1/2" OD. X .065 WALL	316 OR 316L SST	5
	1	3	0091A110F76T005P	THERMOWELL, 11" IMMERSION LENGTH, FLANGED CLASS 300 LBS, 0.5" LAGGING LENGTH	TYPE 316 SS, THERMOWELL ROSEMOUNT	4
	1	3	SS-8-VCR-3	1/2" VCR SOCKET WELD GLAND TYPE 316 SST	SWAGELOK	3
	1	3	SS-8-VCR-3	1/2" VCR FEMALE NUT TYPE 316 SST	SWAGELOK	2
						1
	3		-0	ASSEMBLY		0

Randy Eastman
CWI
2015.08.05 15:15:54 -06'00'

PROFESSIONAL ENGINEER REGISTERED 4307 STATE OF IDAHO RANDY EASTMAN

I CERTIFY THE CHANGES SHOWN ON THIS DRAWING REFLECT THE CURRENT CONSTRUCTED CONDITION AS OF 07/15/2015

INSPECTION REQUIREMENTS	-0	571515
QC REQUIRED	DASH NO.	NEXT ASSY
(Q) DENOTES Q/C INSP. REQD.	APPLICATION	

DIMENSIONING AND SYMBOLOGY PER ASME Y14.5-2009 AND STD-11
UNLESS OTHERWISE SPECIFIED
SURFACE ROUGHNESS 125/
DIMENSIONS AND TOLERANCES ARE IN INCHES
TOLERANCES: .X = ± .1
DECIMALS: ~~.XX = ± .03~~ ~~.XXX = ± .010~~
FRACTIONS ± 1/8
ANGULAR ± 2°
DO NOT SCALE DRAWING

SIGNATURES/DATES APPLY TO CURRENT RELEASE ONLY	SIGN AND DATE
DESIGN: R. CAMPBELL	Rodney C. Campbell HuleArkcendent 2015.08.05 14:50:52 -06'00'
DRAFTER: A. KEY	Angela L Key Nuclear Technology 2015.08.05 15:01:06 -06'00'
TECHNICAL CHECK: T. BURNETT P.E.	Troy P. Burnett Walish Engineering 2015.08.05 15:10:39 -06'00'
ENG GROUP SUPERVISOR: R. EASTMAN, P.E.	Randy Eastman CWI 2015.08.05 15:16:06 -06'00'
DESIGN LEAD/AUTHORITY: D. MORGAN	David Morgan CWI 2015.08.05 14:55:10 -06'00'
DRAFTING CHECK/ EFFECTIVE DATE: S. BERTHELSON	
PROJECT NUMBER: 31720	
DRF NUMBER: 343941	

Idaho Cleanup Project CH2M•WG IDAHO, LLC

CPP-666

RH-TRU DISTILLATION SYSTEM

SPOOL PIECE 8

SIZE	INDEX CODE NUMBER AREA	TYPE	CL	ORIG	DWG-	REV
D	200	0666	53	136	788579	2

SCALE: NONE SHEET 1 OF 1

File: 788579-2.dwg
Path: K:\RH-TRU Distillation\Drawings\DRF-346066
Date: 08/05/15 - 9:50 AM | Layout Name: Layout1 | ID: KEYAL

FMT-D1-REV 2014-01-29

REVISIONS	
REV	DESCRIPTION
1	REVISED TITLE BLOCK AND ADDED INDEX CODE SEE DRF-347065

NOTES

1. THE ARS-1 DRAIN BOTTLE IS FOR WASTE STREAMS HAVING CRITICALITY SAFETY CONTROLS.
2. ARS BOX WALLS ARE CONSTRUCTED OF LEXAN MR10 FOR VISUAL CLARITY OF THE OPERATIONS

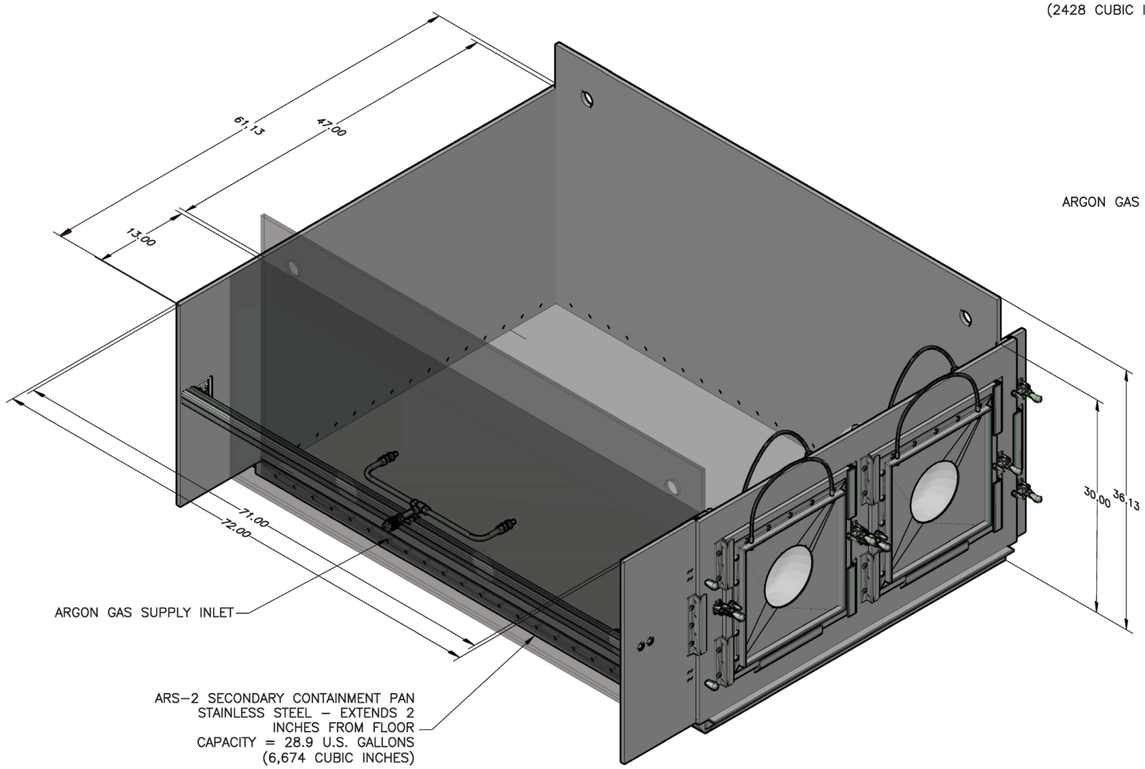

ARS -2 BOX

SSC ID SHEQ-FC-920
BOX CAPACITY = 433.4 U.S. GALLONS
(100,110 CUBIC INCHES)
SCALE: NONE

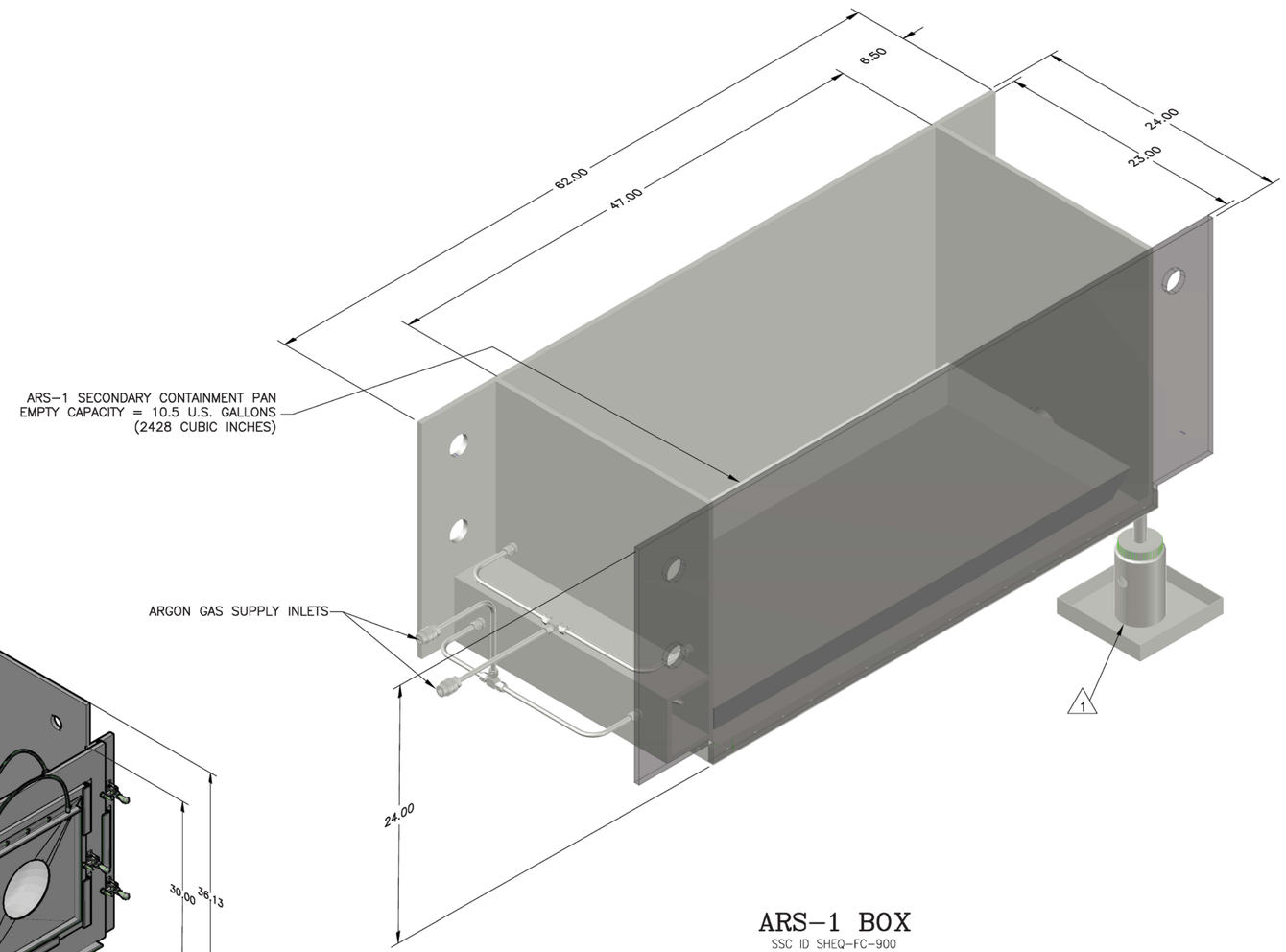

ARS-1 BOX

SSC ID SHEQ-FC-900
WITH STAINLESS STEEL TRAY
BOX CAPACITY = 112.3 U.S. GALLONS
(25,944 CUBIC INCHES)
SCALE: NONE

Randy Eastman
CWI
2015.11.11 16:11:56 -07'00'

PROFESSIONAL ENGINEER REGISTERED 4307 STATE OF IDAHO RANDY EASTMAN

PAN	791843
-2	780900
-1	773983
DASH NO.	NEXT ASSY
APPLICATION	

INDEX CODE NUMBER			
AREA	TYPE	CL	ORIG
200	0659	41	136

DIMENSIONING AND SYMBOLOGY PER ASME Y14.5-2009 AND STD-11
UNLESS OTHERWISE SPECIFIED
SURFACE ROUGHNESS 125
DIMENSIONS AND TOLERANCES ARE IN INCHES
TOLERANCES: .X = ± .1
DECIMALS: .XX = ± .03
.XXX = ± .010
FRACTIONS ± 1/8
ANGULAR ± 2°
DO NOT SCALE DRAWING

SIGNATURES/DATES APPLY TO CURRENT RELEASE ONLY	SIGN AND DATE
DESIGN: K.KRIVANEK	Kenneth R. Krivanek North Wind Inc. 2015.11.12 06:50:35 -07'00'
DRAFTER: T. ROMRIELL	ORIN MORGAN URS 2015.11.11 14:08:09 -07'00'
TECHNICAL CHECK: T. JORGENSEN	Travis Jorgensen North Wind Inc. 2015.11.11 14:43:30 -07'00'
ENG GROUP SUPERVISOR: R. EASTMAN, P.E.	Randy Eastman CWI 2015.11.11 16:11:46 -07'00'
DESIGN LEAD/AUTHORITY: D. MORGAN	David Morgan CWI 2015.11.11 14:37:08 -07'00'
DRAFTING CHECK/ EFFECTIVE DATE: S. BERTHELSON	Kris Keller CWI 2015.11.12 15:36:50 -07'00'
PROJECT NUMBER: 31720	
DRF NUMBER: 345285	

Idaho Cleanup Project CH2M•WG IDAHO, LLC

INTEC CPP-659/666
ARGON REPACKAGING
STATIONS 1.0 & 2.0

SIZE	INDEX CODE NUMBER				DWG-	REV
	AREA	TYPE	CL	ORIG		
D	200	0666	41	136	792396	1

SCALE: NONE SHEET 1 OF 1

HWMA/RCRA PART B PERMIT

FOR THE IDAHO NATIONAL LABORATORY

Volume 18 – Idaho Nuclear Technology and Engineering Center

APPENDIX 3

Debris Treatment Processes
Holdup and Collection Tanks
CPP-659/-1659 Storage
CPP-666 FDP Cell Container Storage and Slab Tank Storage
Other Miscellaneous Treatment Processes
RMWSF (CPP-1617) Container Storage Area

HIGH DENSITY CONCRETE

CONSTRUCTION SPECIFICATION

Effective Date: April 27, 2009

U.S. ENERGY RESEARCH &
DEVELOPMENT ADMINISTRATION
New Waste Calcining Facility, INEL
Contract E (10-1)-1495

FLUOR ENGINEERS AND CONSTRUCTORS, INC.
Fluor Contract 453504

SPECIFICATION SP--453504-- 10 -- 2

HIGH DENSITY CONCRETE CONSTRUCTION

APPROVED FOR CONSTRUCTION

REV.	DATE	DESCRIPTION	APPROVED BY	DATE
0	8/23/77	Approved For Construction	ORIG M. Dorin M. Dorin	8/23/77
			FLUOR James Wrap	8/24/77
			FLUOR	
			FLUOR M. Cutler	8/25/77
			FLUOR R. Snell	8/25/77
			ACC H.U. Johnson by DM	8-31-77
			ORIG	
			FLUOR	
			FLUOR	
			FLUOR	
			FLUOR	
			ACC	
			ORIG	
			FLUOR	
			FLUOR	
			FLUOR	
			FLUOR	
			ACC	
			ORIG	
			FLUOR	
			FLUOR	
			FLUOR	
			FLUOR	
			ACC	
			ORIG	
			FLUOR	
			FLUOR	
			FLUOR	
			FLUOR	
			ACC	

ALLIED CHEMICAL CORPORATION
IDAHO CHEMICAL PROGRAMS - OPERATIONS OFFICE
IDAHO FALLS, IDAHO

THIS DOCUMENT IS RELEASED 8-31-77
AND SUBSEQUENTLY CONTROLLED IN ACCORDANCE
WITH ACC STANDARD PRACTICES.

SPECIFICATION SP-453504-10-2

HIGH DENSITY CONCRETE CONSTRUCTION

CONTENTS

	TITLE	PAGE
	SCOPE	1
	REFERENCE SPECIFICATIONS, CODES AND STANDARDS	1
	HIGH DENSITY CONCRETE MATERIALS	2
4.0	REINFORCEMENT	6
	EMBEDDED ITEMS	6
	PROPORTIONING	7
7.0	MIXING	8
8.0	PLACING HIGH DENSITY CONCRETE	8
9.0	FORMWORK	10
10.0	FINISHING	10
11.0	JOINTS	11
12.0	GROUT AND DRYPACKING	11
13.0	EPOXY GROUTING	11
	COLD WEATHER CONCRETING	11
	HOT WEATHER CONCRETING	11
	INSPECTION AND TESTING	11
	CURING AND PROTECTION	12
18.0	QUALITY CONTROL	12

SPECIFICATION SP-453504-10-2

HIGH DENSITY CONCRETE CONSTRUCTION

1.0 SCOPE

General

1.1.1 Except as otherwise noted herein, high density concrete shall meet all requirements of Specification SP-453504-10-1, Concrete Construction, pertaining to regular concrete.

1.1.2 High Density Concrete shall be placed only at the locations and to the extent shown or noted on the engineering drawings.

1.1.3 The Contractor shall provide all labor, equipment, transportation, and materials required to perform all poured in-place high density concrete work for the New Waste Calcining Facility at the Idaho National Engineering Laboratory near Idaho Falls, Idaho.

1.2 The work shall include, but is not necessarily limited to, the following:

(1) Placing of anchor bolts, support angles and other embedded items as shown on drawings.

(2) High density concrete grouting.

2.0 REFERENCE SPECIFICATIONS, CODES AND STANDARDS

The following publications of the issue shown form a part of this specification to the extent indicated by references thereto. Where no issue date is shown, the latest edition of the publication shall apply:

2.1 Fluor Engineers and Constructors, Inc., Specification

SP-453504-10-1	Concrete Construction

2.2 Codes and Standards

(1) American Concrete Institute (ACI)

ACI 211.1-74	Recommended practice for Selecting Proportions for Normal and Heavyweight Concrete
ACI 309-72	Recommended Practice for Consolidation of Concrete

2.2 (Continued)

(1) (Continued)

ACI 318-71	Building Code Requirements for Reinforced Concrete

(2) American Society for Testing and Material (ASTM)

ASTM-C-127-73	Specific Gravity and Absorption of Coarse Aggregate
ASTM-C-128-73	Specific Gravity and Absorption of Fine Aggregate
ASTM-C-150-76	Portland Cement
ASTM-C-494-71	Chemical Admixtures for Concrete
ASTM-C-637-73	Aggregate for Radiation - Shielding Concrete

2.3 In case of conflict, the following order of precedence shall apply:

(1) Drawings

(2) This Specification, SP-453504-10-2, High Density Concrete Construction

Specification SP-453504-10-1, Concrete Construction

(4) Codes and Standards

2.4 Where reference is made, in the above reference specifications, codes and standards, to "Building Official, Engineer or Responsible Authority," these terms shall be considered as synonymous with the ERDA Contracting Officer or his representative.

3.0 HIGH DENSITY CONCRETE MATERIALS

3.1 Cement

Cement shall be low alkali conforming to ASTM C-150, Type I-II. One brand and type of cement shall be selected and used throughout the NWCF project. All cement shall be a certified brand, and shall be sampled, tested and approved by the Contracting Officer. Certified mill test reports from the approved supplier may be accepted in lieu of tests by the Contracting Officer at his option. Only tested and approved cement shall be used.

3.2 Aggregate

3.2.1 The fine and coarse aggregate shall be crushed magnetite aggregates.

3.2.2 One source of aggregate shall be selected and used throughout the work, supported by test and investigation reports, and shall be approved by the Contracting Officer.

3.2.3 The bulk specific gravity of the aggregates shall be 4.5 minimum (saturated, surface dry). Specific gravities shall be determined as defined in ASTM designation C-127 for coarse aggregate and ASTM designation C-128 for fine aggregate. The specific gravity of any shipment shall not differ by more than 3 percent of the average bulk specific gravity of the aggregate supplied as samples and used for the concrete design mix.

3.2.4 Maximum absorption of the aggregate shall be 2 percent.

3.2.5 The aggregate shall conform to ASTM C-637, except for the following modifications:

a. Paragraph 3.3 "Fixed Water Content of Hydrous Ores," not applicable.

b. Paragraph 5 and 6 test for "Deleterious Substances" and "Abrasion Resistance of Coarse Aggregate." These tests shall be performed only on the first aggregate test samples obtained for determining the aggregate suitability to be used for the high density concrete, see Paragraph 3.2.6 "Aggregate Certification" of this Specification. In successive samples and/or shipments of aggregates, the sample taken to the testing laboratory shall be inspected only to see if they comply with uniformity and quality, in respect to "Deleterious Substances" and "Abrasion Resistance," of the first aggregate test samples tested. In the event that it is apparent that there is no compliance, the shipment shall be tested as specified in Paragraphs 5 and 6 and/or rejected.

c. The aggregates shall be graded within the following limits:

3.2.5.1 Fine Aggregate

Sieve Size	Percent Passing
3/8 inch	100
No. 4	95 - 100
No. 8	70 - 100
No. 16	45 - 85
No. 30	25 - 60
No. 50	10 - 35
No. 100	2 - 20
No. 200	0 - 10

The fineness modulus shall not be less than 2.3 or more than 3.1. The grading of fine aggregate shall be controlled so that the fineness moduli of the test samples shall not vary more than 0.20 from the average fineness modulus of all samples previously taken. The fineness modulus shall be determined by dividing by 100 the sum of the cumulative percentages retained on sieves Numbers 4, 8, 16, 30, 50 and 100.

3.2.5.2 Coarse Aggregate shall be 3/4 inch maximum size.

Sieve Size	Percent Passing
1 inch	100
3/4 inch	90 - 100
1/2 inch	50 - 75
3/8 inch	20 - 55
No. 4	0 - 10

3.2.5.3 The above fine and coarse aggregate gradation represents the extreme limits which shall determine suitability of the aggregates to be used for the high density concrete. An acceptable degree of uniformity shall be maintenance of fineness modulus of successive samples and shipments with plus or minus 0.20 of the originally accepted sample.

3.2.6 Aggregates Certification

The Contractor shall obtain test samples of the fine and coarse aggregates for determining their suitability to be used for the high density concrete. The aggregates shall be tested in accordance with the requirements specified herein. The Contractor shall submit the test results to Contracting Officer and obtain his approval, in writing, prior to ordering

3.2.6 (Continued)

and shipment of the aggregate. All tests shall be conducted by the testing laboratory, approved by the Contracting Officer. The Contractor shall provide the tests in conformance with the Method of Sampling and Testing specified in and referred by ASTM C-637, except as otherwise provided within this specification.

3.2.7 Aggregates Testing

Any new shipment of samples or delivery of fine or coarse aggregates shall be retested in accordance with this specification for compliance with the requirements and uniformity of the shipments. Failure of the delivered aggregate to pass these tests or meet the requirements shall be a cause for rejection, unless suitable adjustments or recommendations are made in proportions of fine and coarse aggregate. These recommendations and adjustments shall be made by the testing laboratory and submitted in writing by the Contractor to the Contracting Officer for his approval.

Any new shipment of fine or coarse aggregate shall not be released for use, nor mixed with previous shipments until acceptable test results have been obtained.

3.2.8 Frequency of Aggregate Testing

3.2.8.1 A minimum of one set of tests for every new shipment of samples or delivery of aggregates.

3.2.8.2 A minimum of one set of tests for every 100 tons of fine or coarse aggregate delivered.

3.2.8.3 Additional tests may be required by the Contracting Officer or the testing laboratory, to insure aggregate shipment uniformity.

3.2.8.4 The Contractor shall inform the Contracting Officer, in writing, of any failure of the aggregate shipment, or fraction of a shipment, to meet the requirements of this specification. Any noncompliance with the requirements may be a cause for rejection of a specific shipment, unless the testing laboratory can recommend suitable adjustments in the design mix proportions, and those adjustments are approved in writing by the Contracting Officer.

3.2.9 Shipment and Storage of Aggregates

Aggregates should be shipped, handled, and stored in a manner which will assure little loss of fine aggregates, no contamination by foreign material, and no significant aggregate breakage or segregation.

Coarse and fine aggregate shall be shipped separately. Aggregates may be shipped in heavy wood boxes, watertight bags, steel containers, or in bulk by railroad cars or trucks. Storage should be as near the batch plant as possible. The size, coarse or fine, and weight of the aggregate in each container shall be plainly marked on the container.

Water

Mixing water shall be potable and free from injurious amounts of oils, acids, alkalis, salts, organic materials or other deleterious substances.

Admixtures

3.4.1 Water reducing admixtures shall conform to ASTM C-494, Type A or D.

3.4.2 Air-entraining admixture shall not be used in high density concrete without recommendation of the testing laboratory and written approval of the Contracting Officer. The use of air-entraining admixtures tends to decrease the density of the concrete.

3.4.3 Calcium chloride or admixtures containing chlorides shall not be used in concrete without approval of the Contracting Officer.

4.0 REINFORCEMENT

The Contractor shall conform to the requirements of Specification SP-453504-10-1, "Concrete Construction," Paragraph 4.0, "Reinforcement," except that in Subparagraph 4.4.2 the precast concrete blocks embedded in high density concrete shall be made of high density concrete. The bonding grout and patching mortar shall be made of magnetic aggregates, see Paragraph 10.0 of this specification.

5.0 EMBEDDED ITEMS

The Contractor shall conform to the requirements of Specification SP-453504-10-1, Paragraph 5.0, except that Subparagraph 5.3 shall be deleted.

6.0 PROPORTIONING

General

Concrete shall be proportioned as set forth in ACI-211.1 and shall meet the quality requirements as set forth in ACI 318, except as modified herein. The Contractor shall submit his concrete design mix for approval to the Contracting Officer prior to use.

Concrete Properties

6.2.1 The specified compressive strength of concrete, f'_c, shall be 4,000 psi based on 28-day tests.

6.2.2 The minimum unit weight of the high density concrete shall be 220.5 pounds per cubic foot.

6.2.3 Concrete with crushed magnetite aggregates, 3/4 inch maximum size, shall be used for all high density concrete work unless otherwise noted on the drawings or approved by the Contracting Officer. The concrete design mix shall contain the maximum quantity of coarse aggregate consistent with workability and method of placement.

6.2.4 High density concrete slump shall range within the following unit:

Reinforced slabs, precast hatch beams, columns and walls, 2 to 4 inches.

If concrete pumping is to be used, then slump may be increased up to 2 inches over the above limits, with specific prior approved by the Contracting Officer. The modified design mix for pumped concrete must be designed and tested by the testing laboratory and shall be approved by the Contracting Officer.

6.2.5 Concrete Air Content

Entrapped air shall be considered in the concrete mix; however, air-entraining admixture or air-entraining Portland cement shall not be used, see Paragraph 3.4.2.

6.2.6 The concrete mix shall contain a water-reducing admixture, added in the proportions recommended by the admixture manufacturer and the design mix testing laboratory, and as approved by the Contracting Officer.

6.3 Design Mix Based on Laboratory Trial Batches

6.3.1 The design mix shall be determined on the basis of testing laboratory trial batches test as outlined in Paragraph 4.2.3 of ACI 318 and ACI 211.1. The testing laboratory and the recommended design mix or mixes shall be approved in writing by the Contracting Officer.

6.3.2 The proposed design mix for placed concrete shall be noted, if it is suitable for pumping. If it is not suitable, then a modified special design mix for pumping shall be tested and approved by the Contracting Officer.

7.0 MIXING

General

The Contractor shall conform to the requirements of Specification SP-453504-10-1, Paragraph 7.0, except for the following additional considerations and requirements.

Concrete Mixing Equipment

Standard mixing equipment may be used to mix the high density concrete Special care shall be taken not to overload the equipment. In general, the allowable volume of high density concrete mixed shall be equivalent to the mix weight of normal density concrete rather than the volume capacity of the mixing equipment. Transporting high density concrete without agitation tends to cause excessive consolidation or packing, and therefore shall be avoided.

8.0 PLACING HIGH DENSITY CONCRETE

General

Placement of the mixed high density concrete shall be subjected to the same considerations of quality control as for normal density concrete. The Contractor shall conform to the applicable requirements of Specification SP-453504-10-1, Concrete Construction, Paragraph 8.0, except for the following additional considerations and requirements.

The mixed high density concrete is far more susceptible to variations in quality due to improper handling. It is particularly subject to segregation during placement. Segregation of high density concrete results not only in variation of strength, but also in variations in density, as lighter materials such as cement, water, and air will displace heavier high density aggregates. This adversely affects shielding properties.

8.3 The placement of high density concrete is frequently required in areas which are congested with reinforcing steel, penetrations, and blockout.

Placement conditions dictate the strictest observance of good placement practice. Because of the complexity of forms and embedments, it is usually necessary to avoid pump or "drop-pipe" placement techniques in areas which are inaccessible to direct observation by workmen at all times. However, in other accessible areas, if the mixes are proportioned properly, they are pumpable and will pump better at a lower slump than normal weight concrete.

Placing the high density concrete by pumping is not recommended because of the tendency of the aggregates to segregate. However, if the Contractor chose to use pumping for specific areas, he should use only the mix design that was approved for pumping, see Subparagraphs 6.2.4 and 6.3.2. The pumping operation shall be done only by experienced workmen. The flow of the concrete shall be observed at all times to notice and immediately correct any tendency of the aggregate to segregate.

Use of long, rigid chutes or drop pipes shall be avoided. Where concrete must be placed in narrow forms or through restricted areas, a short flexible type drop chute which tends to collapse and restrain the fall of high density concrete should be employed.

8.6 The entire Subparagraph 8.5 of Specification SP-453504-10-1 shall be substituted by the following requirements:

In placing the high density concrete the height of the force-fall drop of the concrete shall be no more than 4 feet, as measured from the end of the chute, trunk, bucket, etc., to the top surface of the existing or previously poured concrete. This can be accomplished by the use of pour holes in the forms, chutes, buckets, trunks, or any other acceptable method. The stream of concrete should not separate by permitting it to fall freely over rods, spacers, reinforcement, or other embedded material.

8.7 High density concrete usually will not "flow" in a form and must be placed in each discrete area and compacted in place with a minimum of vibration. Under no circumstances should an attempt be made to move high density concrete with vibration equipment.

Layers of placed high density concrete shall be limited to a maximum 12 inches.

<u>High-Density Concrete Consolidation</u>

8.9.1 Consolidation shall conform to ACI 309, "Recommended Practice for Consolidation of Concrete," Chapter 14.

8.9.2 Internal vibrators shall be used to achieve uniform and optimum density. Vibrator frequencies used for normal concrete are usually satisfactory for heavy concrete. However, somewhat higher frequencies, about 11,000 vibrations per minute (180 Hz), together with shorter vibration periods have sometimes been found to reduce the tendency for segregation. Over vibration shall be avoided, since this causes settlement of the heavy particles.

8.9.3 In high density concrete, vibrators have a smaller effective area, or radius of action than in normal concrete; therefore, greater care must be exercised to insure that the concrete is properly consolidated. Vibrators shall be inserted at closer spaced intervals than for normal concrete and only to a depth sufficient to cause complete intermixing of adjacent layers.

8.9.4 Vibration and revibration to remove entrapped air and to establish aggregate-to-aggregate contact may cause an excess amount of grout to collect on the top of the placed lift surfaces. If this occurs, the lower density grout should be removed from the upper surface at the completion of each placement while the concrete is still in a plastic state.

9.0 FORMWORK

9.1 General

The Contractor shall conform to the requirements of Specification SP-453504-10-1, Paragraph 9.0, except for the following additional considerations and requirements.

The form designer shall be aware that formwork for conventionally placed high density concrete must necessarily be stronger than comparable formwork for ordinary concrete simply by reason of increased concrete density.

9.3 The form designer shall also be aware that all sleeves, penetrations and blockouts and their related strutting and bracing systems must be carefully designed for the increased concrete density, to insure their integrity and alignment.

10.0 FINISHING

The Contractor shall conform to the requirements of Specification SP-453504-10-1 "Concrete Construction," Paragraph 10.0 "Finishing," except that in Subparagraph 10.1.2, the fine sand for the bonding grout and the fine aggregate for the patching mortar shall be magnetite aggregate.

11.0 JOINTS

The Contractor shall conform to the requirements of Specification SP-453504-10-1 "Concrete Construction," Paragraph 11.0 "Joints."

12.0 GROUT AND DRYPACKING

12.1 General

The Contractor shall conform to the requirements of Specification SP-453504-10-1, Paragraph 12.0, except for the following additional considerations and requirements.

12.2 Normal Weight Nonshrink Grout

The nonshrink grout as specified in Specification SP-453504-10-1, Subparagraph 12.1, may be used for bedplates, equipment bases and similar uses where this grout is not an integrated part of the thickness required for shielding, or in no way will effect shielding properties requirements.

12.3 Normal Weight Drypacking

Drypacking as specified in Specification SP-453504-10-1, Subparagraph 12.2, with normal weight sand shall be used only where called for on the drawings. This grout may be used only where it is not an integrated part of the thickness required for shielding, or in no way will affect the shielding properties requirement.

EPOXY GROUTING

The Contractor shall conform to the same requirements as specified in Specification SP-453504-10-1, Paragraph 13.0.

COLD WEATHER CONCRETING

The Contractor shall conform to the requirements as specified in Specification SP-453504-10-1, Paragraph 14.0.

HOT WEATHER CONCRETING

The Contractor shall conform to the requirements as specified in Specification SP-453504-10-1, Paragraph 15.0

INSPECTION AND TESTING

The Contractor shall conform to the requirements as specified in Specification SP-453504-10-1, Paragraph 16.0.

17.0 CURING AND PROTECTION

The Contractor shall conform to the same requirements as specified in Specification SP-453504-10-1, Paragraph 17.0.

18.0 QUALITY CONTROL

General

The Contractor and the Contracting Officer shall be aware of the utmost importance that a thorough quality control program shall be maintained prior to the start of construction and throughout the duration of construction. This specification shall be strictly enforced and any deviation or noncompliance shall be immediately reported in writing to the Contracting Officer.

18.2 A sensitive balance exists between the three major requirements:

a. Specified strength of the concrete.

b. Specified high unit weight of the concrete for shielding.

c. A limit on excessive unit weight of the concrete because of the weight limitation for lifting the hatches.

Any noncompliance with any item of this specification or any unauthorized "field adjustment" in the design mix, placement, etc., may result in disturbing this balance.

Any attempt to increase strength by adding cement, will displace the heavier aggregate, and adversely affect shielding properties.

18.4 Any attempt to increase the unit weight of the concrete by increasing the percent of heavy magnetite aggregate in the mix and decreasing the lighter materials such as water, cement and entrapped air, may result in reduced strength and cause the hatches to become overweight for lifting.

Any noncompliance with the mixing and/or placing requirement may result in reduction of the concrete strength and may create areas of defective shielding properties.

HWMA/RCRA PART B PERMIT

FOR THE IDAHO NATIONAL LABORATORY

Volume 18 – Idaho Nuclear Technology and Engineering Center

APPENDIX 4

Debris Treatment Processes
Holdup and Collection Tanks
CPP-659/-1659 Storage
CPP-666 FDP Cell Container Storage and Slab Tank Storage
Other Miscellaneous Treatment Processes
RMWSF (CPP-1617) Container Storage Area

STRUCTURAL STEEL SPECIFICATION

Effective Date: April 27, 2009

U.S. ENERGY RESEARCH &
DEVELOPMENT ADMINISTRATION
New Waste Calcining Facility, INEL
Contract E (10-1)-1495

FLUOR ENGINEERS AND CONSTRUCTORS, INC.
Fluor Contract 453504

SPECIFICATION SP-453504-20 - 1

STRUCTURAL STEEL

REVISED
APPROVED FOR
CONSTRUCTION
FLUOR ENGINEERS AND CONSTRUCTORS INC.

REV.	DATE	DESCRIPTION	APPROVED BY	DATE
0	11-24-76	Issued "Approved for Construction"	ORIG FLUOR See attached FLUOR Rev. 0 coversheet FLUOR FLUOR ACC	
1	3-25-77	Revised and reissued "Approved for Construction" per DCN No. 58-1	ORIG M. Dorin FLUOR T. Hoang FLUOR FLUOR C. E. Zlastis FLUOR ACC H. H. Johansen by [illegible]	3/25/77 3/25/77 3-30-77 3-30-77 3-30-77
2	6-16-77	Revised and reissued "Approved for Construction" per DCN No. 100-1	ORIG John G. Shipp FLUOR T. Hoang FLUOR FLUOR M. F. Cutler FLUOR R. Shell ACC H. H. Johansen by [illegible]	6-20-77 6-20-77 6-20-77 6-20-77 6-24-77
3	10-20-77	Revised and reissued "Approved for Construction" per DCN No. 190-1	ORIG H. H. Tamm FLUOR John G. Shipp FLUOR FLUOR M. F. Cutler FLUOR R. Shell ACC H. H. Johansen by [illegible]	10/21/77 10/21/77 10/21/77 10/24/77 10-25-77
			ORIG FLUOR FLUOR FLUOR FLUOR ACC	

ALLIED CHEMICAL CORPORATION
IDAHO CHEMICAL PROGRAMS - OPERATIONS OFFICE
IDAHO FALLS, IDAHO

38181

THIS DOCUMENT IS RELEASED 12-1-76
AND SUBSEQUENTLY CONTROLLED IN ACCORDANCE
WITH ACC STANDARD PRACTICES.

U.S. ENERGY RESEARCH &
DEVELOPMENT ADMINISTRATION
New Waste Calcining Facility, INEL
Contract E (10-1)-1495

FLUOR ENGINEERS AND CONSTRUCTORS, INC.
Fluor Contract 453504

APPROVED FOR CONSTRUCTION

SPECIFICATION SP-453504-20-1

STRUCTURAL STEEL

The attached specification, revised as indicated below is issued herewith. If this is a later revision than now in your possession, please destroy previous issue.

Revision No.	0	Date	11-24-76	Pages	All
Revision No.		Date		Pages	
Revision No.		Date		Pages	
Revision No.		Date		Pages	
Revision No.		Date		Pages	

NOTE: New Issue _____

Revised sheets only attached _____

Entire specification reissued X

Originated	Ramzi G. Saaty Ramzi Saaty	Date	11-24-76
Approved by	[illegible]	Date	11-24-76
Approved by	[illegible]	Date	[illegible]
Approved by	[illegible]	Date	11-2[illegible]-76
ACC Approved by	H. E. Johnson by [illegible]	Date	12-1-76

ALLIED CHEMICAL CORPORATION
IDAHO CHEMICAL PROGRAMS - OPERATIONS OFFICE
IDAHO FALLS, IDAHO

THIS DOCUMENT IS RELEASED 12-1-76
AND SUBSEQUENTLY CONTROLLED IN ACCORDANCE
WITH ACC STANDARD PRACTICES.

SPECIFICATION SP-453504-20-1

STRUCTURAL STEEL

CONTENTS

	TITLE	PAGE
1.0	SCOPE	1
2.0	REFERENCE SPECIFICATIONS, CODES AND STANDARDS	2
3.0	MATERIALS	3
	DETAILS AND FABRICATION	4
	INSTALLATION OF HIGH STRENGTH BOLTS	6
	STEEL DECKING	8
7.0	METAL GRATING AND TREADS	9
8.0	MISCELLANEOUS METAL	10
	STAINLESS STEEL	11
	DISSIMILAR MATERIALS	11
11.0	PREFORMED METAL SIDING	12
12.0	SUBSTITUTIONS	12
13.0	INSPECTION	12

SPECIFICATION SP-453504-20-1

STRUCTURAL STEEL

1.0

General

The Contractor shall provide all labor and material to fabricate and erect structural steel in accordance with design drawings and this specification for the proposed New Waste Calcining Facility at the Idaho National Engineering Laboratory near Idaho Falls, Idaho.

The work shall also include, but not be limited to, the following:

(1) Structural steel.

(2) Steel decking.

(3) Bridge crane steel supports, rails and stops.

(4) Ladders, handrails and guardrails.

(5) All metal grating and treads, including banding and fasteners.

(6) Embedded steel ladder rungs.

(7) Complete shop detail drawings with bills of material.

(8) Erection drawings with field welds indicated.

(9) Structural steel surface cleaning and priming.

(10) Common and high-strength bolts.

(11) Welded stud bolts.

(12) Grout plates, slide plates, anchor bolts and other items to be embedded in concrete.

(13) Miscellaneous metal

(14) Stainless steel.

(15) Stairs

2.0 REFERENCE SPECIFICATIONS, CODES AND STANDARDS

The following publications of the issue shown form a part of this specification to the extent indicated by the reference thereto. Where no issue date is shown, the latest edition of the publication in effect on the Purchase Order shall apply:

2.1 Fluor Engineers and Constructors Specifications

SP-453504-20-2	Stainless Steel
SP-453504-30-1	Painting and Protective Coating
SP-453504-90-13	Structural Welding Shop and/or Field

2.2 Codes and Standards

(1) American Institute of Steel Construction (AISC)

AISC Specification for the Design, Fabrication and Erection of Structural Steel for Buildings, dated February, 1969, including Supplement No. 3, dated June, 1974.

AISC Code of Standard Practice for Steel Buildings and Bridges, dated October, 1972.

(2) American Society for Testing and Materials (ASTM)

ASTM-A36	Standard Specification for Structural Steel, dated 1975.
ASTM-A53	Welded and Seamless Steel Pipe, dated 1972.
ASTM-A307	Carbon Steel Externally and Internally Threaded Standard Fasteners, dated 1974.
ASTM-A325	Specification for Structural Steel Joints Using ASTM-A325 Bolts, dated May, 1974.
ASTM-A501	Hot-Formed Welded and Seamless Carbon Structural Steel Tubing, dated 1974.
ASTM-A446	Steel Sheet, Zinc-Coated by Hot-Dip Process, Physical Quality, dated 1972
ASTM-A525-73	Standard Specification for Steel Sheet, Zinc-Coated (Galvanized) by the Hot-Dip Process, General Requirement, dated 1973

38181

(Continued)

(3) Steel Structures Painting Council (SSPC)

SSPC-SP-3	Power Tool Cleaning

(4) Federal Specification

TT-P-636d	Primer Coating, Alkyd, Wood and Ferrous Metal.
TT-V-51e	Varnish, Asphalt.
TT-P-645	Primer, Paint Zinc Chromite, Alkyd Type

(5) Military Specification

MIL-C-18480A	Coating Compound, Bituminous Solvent, Coal Tar Base.

(6) American Welding Society (AWS)

A5.1	Specification for Mild Steel Covered Arc-Welding Electrodes, dated 1969.

Whenever a difference exists between the design drawings and this specification, the drawing shall govern.

3.0 MATERIALS

Structural Steel, Structural Tubing, and Steel Pipe

3.1.1 Structural steel, structural tubing, and steel pipe shall conform to the following ASTM Specifications:

(1) Structural Steel: ASTM A36

(2) Structural Tubing: ASTM A501

(3) Steel Pipe: ASTM A53, Type E or S, Grade B

3.1.2 Welding electrodes with a minimum tensile strength of 70 ksi shall be used. Electrodes shall be compatible with welding process selected, conforming to Fluor Specification SP-453504-90-13.

3.2 Bolts

3.2.1 Common (machine) bolts shall be 5/8 inch diameter and shall conform to ASTM A307 specifications. Nuts shall be American National Standard, hexagonal heavy.

3.2.2 High-strength bolts shall be 3/4 inch diameter unless otherwise noted, and shall conform to ASTM Specification A325. One high-strength bolt assembly shall consist of a heavy semifinished hex head structural bolt and a heavy semifinished hex nut.

3.2.3 All bolts required for erection shall be included with the first shipment of fabricated steel for each unit or structure in clearly marked containers.

3.2.4 Quantities of both common and high-strength bolts shall include 5 percent extra per size and length, to cover requirements for fit-up and erection.

3.2.5 Nelson welded threaded stud bolts shall be of size as noted on the drawings.

3.2.6 Nelson welded studs are an acceptable substitute for the welded mild steel concrete anchors indicated on the drawings.

3.2.7 All bolt threads shall extend a minimum of three (3) thread lengths beyond the outer nut surface after bolts have been tightened.

4.0 DETAILS AND FABRICATION

4.1 Contractor shall conform to the following shop detailing and fabricating requirements unless shown otherwise on the design drawings.

4.1.1 Connections which are not detailed or otherwise noted on the design drawings shall be shop-welded and field-bolted according to the AISC Manual of Steel Construction, Framed Beam Connections, Tables III and I. Use the maximum number of rows of field bolts shown in Table I for each beam depth. Use a 1/4 inch shop weld "A" shown in Table III for the required number of field bolts. Shop connections having unprimed contact surfaces shall be seal welded to prevent corrosion except when physically impossible.

4.1.2 Field connections shall be made using high strength bolts in bearing connections unless noted otherwise on the design

4.1.2 (Continued)

drawings. Do not omit paint or galvanizing from the contact surfaces within the joints. Bolt threads need not be excluded from the shear planes.

4.1.3 End distances shall conform to AISC, "Structural Steel for Buildings", Section 1.16.6, without reduction for low stress unless noted on the design drawings. When more than two fasteners are provided in the line of stress, the provisions of Section 1.16.5 of AISC, "Structural Steel for Buildings", shall govern.

4.1.4 The Fabricating Contractor shall furnish and install erection clips for fit-up of welded connections.

Clearance shall be provided for field erection in accordance with AISC Manual of Steel Construction, Part 4, pages 114 and 115.

Gusset plates shall be 5/16 inch thick minimum

4.1.7 Columns shall have full bearing at splices and at end plates.

4.1.8 Sharp corners and burrs shall be removed before shop priming.

4.1.9 Structural steel welding shall be in accordance with requirements outlined in Fluor Specification SP-453504-90-13.

4.1.10 Double angle members when used, shall have welded fillers spaced in accordance with Section 1.18.2.4 of the AISC, "Structural Steel for Buildings."

4.1.11 <u>Shop Painting</u>

4.1.11.1 Steel items shown on the drawings and/or specified herein this division of the specification (except stainless steel items and steel decking) shall be given a shop coat of Alkyd Zinc Chromate Primer, conforming with Federal Specification TT-P-645.

4.1.11.2 Cleaning and shop priming shall be in accordance with Section 1.24 entitled "Shop Painting" of A.I.S.C. Specification for the Design, Fabrication and Erection of Structural Steel for Building, and in accordance with the Steel Structures Painting Council (SSPC) Specification SSPC-SP-3 Power Tool Cleaning.

4.1.11.3 Steel work specified to have no shop painting shall be cleaned of loose mill scale or rust by wire brushing or other methods elected by the fabricator.

4.1.11.4 Faulty applied primer shall be removed and re-primed after proper surface preparation.

4.1.11.5 After erection, structural steel field connections and abraded surfaces shall be touched up with the same paint used for shop painting. See Architectural Specification SP-453504-30-1 entitled "Painting and Protective Coating."

4.1.11.6 Steel embedded in concrete or masonry shall not be painted but shall be clean and free of rust, oil, and dirt.

4.1.12 Finish Painting

For finish painting see Architectural Specification SP-453504-30-1 entitled "Painting and Protective Coating."

4.2 Shop Drawings

4.2.1 The Fabricating Contractor shall submit a transparency of shop drawings, bills of material, including field bolt lists, and erection drawings to the Contracting Officer for approval before starting fabrication. Only checked drawings will be accepted for approval. Approval of shop drawings by the Contracting Officer shall be interpreted as approval of general methods and arrangements only, and shall not constitute verification of dimensions or quantities. The Fabricating Contractor shall be responsible for the accuracy of fabrication and erection fit-up.

4.2.2 Shop drawings shall include all structural steel, steel decking, grating and all miscellaneous metal covered by this specification.

5.0 INSTALLATION OF HIGH STRENGTH BOLTS

5.1 High Strength bolts shall be tightened by the turn-of-nut method.

Tightening may also be accomplished by turning the bolt head while holding the nut if required by clearances.

38181

Washers are not required, except for tapered washers used to bolt to the flanges of American Standard I beams or channels.

Prior to tightening any bolts, there shall first be enough bolts brought to a snug-tight condition to insure that the joint surfaces are in good contact. Snug-tight is defined as the tightness attained by a few impacts of an impact wrench or the full effort of a man using an ordinary spud wrench.

Following this initial operation, bolts shall be placed in any remaining holes in the connection and brought to snug-tightness.

5.6 Bolts shall then be tensioned by the applicable amount of nut rotation given in the table below. The tensioning shall progress systematically from the most rigid part of the joint to its free edges. During this operation there shall be no rotation of the part not turned by the wrench.

NUT ROTATION FROM SNUG-TIGHT CONDITION

Disposition of Outer Faces of Bolted Parts		
Both faces normal to bolt axis, or one face normal to axis and other face sloped not more than 1:20 (bevel washers not used)		Both faces sloped not more than 1:20 from normal to bolt axis (bevel washers not used)
Bolt length not exceeding 8 diameters or 8 inches	Bolt length exceeding 8 diameters or 8 inches	For all length of bolts
1/2 turn	2/3 turn	3/4 turn

Nut rotation is rotation relative to bolt regardless of the element (nut or bolt) being turned.

Tolerance on rotation: 30 degrees over or under. For course thread heavy hex structural bolts of all sizes and length and heavy hex semifinished nuts.

Bolt length is measured from underside of head to extreme end of point.

The sides of either bolt heads or nuts tightened with an impact wrench will appear slightly peened, and thus indicate that the wrench has been applied to the fastener. It will not be necessary to use other means to assure satisfactory installation.

6.0 STEEL DECKING

General

6.1.1 Physical properties of the steel decking (gage, moment of inertia and section modulus) shall not be less than that specified on the drawings. The depth of steel decking shall be as indicated on the drawings. End and side closures and other required accessories shall be provided.

6.1.2 Deck material and design shall conform to the "Basic Design Specification" as adopted by Steel Deck Institute.

6.1.3 See the drawings for the type of deck to be used, and welding instructions.

6.1.4 Where the steel decking is used as bonded unit with concrete floor, deformations shall be provided in all vertical webs of the steel decking to structurally bond the overlying structural concrete fill.

6.1.5 The following items shall be included but not limited to same: Provide ridge and valley plates, welding, and other required fasteners and accessories. Where so indicated on the drawing, provide galvanized sheet metal closures at the top of the metal stud partitions and the underside of the steel decking.

Materials

6.2.1 The steel floor units and all flashings shall be formed from steel sheets conforming to ASTM-A446-72 with a minimum yield strength of 33,000 psi. The steel shall have a metal protective coating of zinc, conforming to ASTM-A525-73 with minimum weight of coating designation G60 light commercial.

Installation

6.3.1 Installation shall be in strict accordance with the engineering drawings and the manufacturer's erection drawings.

6.3.2 Verify alignment and level of structural steel work, and advise the Contracting Officer of inaccuracies or improper conditions so corrections can be made before decking work has commenced.

6.3.3 Six-inch and smaller openings, measured at right angles to the deck span, shall be cut in the field.

6.3.4 Openings over six inches and up to 30 inches in width shall be cut in the field and reinforced as shown on the drawings.

6.3.5 Openings larger than 30 inches in width shall be supported on structural steel, with deck openings cut in the shop.

6.3.6 Installation and welding of side and end closures shall be in accordance with the manufacturer's recommendations.

6.3.7 Where the steel decking is used as bonded unit with concrete floor, the finished deck shall be so constructed and erected as to prevent the flow of concret through the joints.

6.3.8 After erection, galvanized surface damaged with scratches, welds, cuts or threads, shall be touched-up with cold galvanizing coating. Surfaces shall be cleaned of grease, oil or paint. Weld scale or rust shall be cleaned by wire brushing, or sandblasted. Surface preparation and application shall be in accordance with the recommendations of the compound manufacturer.

6.3.9 Decking shall be fastened to the supporting steel framework as indicated on the drawings. E60 electrodes shall be used on metal decking. E60 electrodes shall conform to American Welding Society (AWS) A5.1 specification for Mild Steel Covered Arc-Welding Electrodes.

7.0 METAL GRATING AND TREADS

7.1 Grating Type

Grating shall be serrated welded with 1-1/4" X 3/16" bearing bars at 1-3/16 inch centers and crossbars at 4 inch centers unless called otherwise on the drawings. Grating shall be shop coated and painted in accordance with Section 4.1.11.

7.2 Stair Treads

Stair treads shall be metal grating with perforated or checker plate standard nosings. The treads shall be fabricated from serrated welded grating having 1" x 1/8" bearing bars at 1-3/16 inch centers.

A standard nosing shall be provided on the grating at the head of stairs.

Banding

Banding bars shall be of the same thickness as the bearing bars to which they are welded. The following locations shall be trim banded, except 7.3.4 which shall be load-carrying banded.

7.3.1 Open ends of grating at head of ladder approach to platform.

7.3.2 Dimensioned openings in grating.

7.3.3 Grating panels with four (4) or less crossbars

7.3.4 Cutouts having unsupported bearing bars.

7.4 Openings

Openings dimensioned on the design drawings shall be provided by the Fabricating Contractor. Undimensioned openings shall be cut in the field.

Fasteners

7.5.1 Grating shall be removable unless otherwise specified on the drawings.

7.5.2 Grating fasteners shall be saddle clip anchors secured to the supporting steel by gun-welded studs. Two fasteners per panel shall be used at each support with a minimum of four per panel.

8.0 MISCELLANEOUS METAL

Ferrous and nonferrous metal items, shapes and work not specified in other divisions, include, but are not limited to, the following:

8.1.1 Miscellaneous angles, brackets, bracing, bolts, fastenings, and expansion anchor bolts and grouted plates.

38181

8.1.2 Embedded: Anchor bolts for equipment and machinery, sleeves and other embedded items.

8.1.3 Supports and backing plates (fastened to metal studs, steel framing, etc.) for: toilet compartment partitions (channel supports), urinal screens, plumbing fixtures, toilet room accessories, mirrors, wall hooks, cabinets, clocks, alarms, fire extinguishers, bulletin boards, equipment and other wall mounted items.

Miscellaneous steel items (except galvanized items) shall be given a shop coat primer complying with Section 4.1.11, unless otherwise noted on drawings.

After erection damaged galvanized surface from scratches, welds, cuts or threads, shall be touched up with cold galvanizing coating. Surfaces shall be cleaned of grease, oil or paint. Weld scale (Slag) or rust shall be cleaned by wire brushing. Surface preparation and application shall be in accordance with the recommendations of the compound manufacturer.

9.0 STAINLESS STEEL

For stainless steel requirements see Specification SP-453504-20-2, "Stainless Steel."

10.0 DISSIMILAR MATERIALS

10.1 Where dissimilar metal surfaces come in contact with metals other than stainless steel, or zinc, isolate the contact surfaces from direct contact with each other to prevent electrolytic corrosive action. One of the following methods shall be used for isolation:

10.1.1 Dissimilar metals at contact surfaces shall be painted with prime coat of zinc-chromate primer, and two coats of protective coating paint (other than paint with lead pigment) which conforms to Federal Specification TT-V-51e (Varnish, Asphalt) or Military Specification MIL-C-18480A (Coating Compound, Bituminous Solvent, Coal Tar Base).

10.1.2 Dissimilar metals shall be painted with heavy coat alkali-resistant bitumious paint in concealed areas.

10.1.3 Dissimilar metals surfaces shall be separated by nonabsorptive tape or gasket.

Fasteners between dissimilar metals shall be hot dipped galvanized, zinc plated, or stainless steel.

11.0 PREFORMED METAL SIDING

For preformed metal siding see Architectural Specification SP-453504-30-7 entitled "Preformed Metal Siding."

12.0 SUBSTITUTIONS

Proposals, in writing, for substitution of steel members in place of those specified, may be submitted for consideration only in the event specified members are not available. No substitutions of member sizes or changes in details or dimensions shall be permitted without the written approval of the Contracting Officer.

The Contracting Officer reserves the right to reject any unsatisfactory materials and misfit members resulting from errors in shop detailing or fabrication, or to make corrections on the job.

13.0 INSPECTION

13.1 The inspectors representing the Contracting Officer shall have access entry at all times to the fabricator's plants for shop inspection and to the construction site where work is being performed.

All welding inspection and examination shall be in accordance with Fluor Specification SP-453504-90-13.

3 13.3 Twenty percent radiographic examination is required for the full penetration welds in maintenance area superstructure and Decon Area superstructure as shown on the design drawings. The location of such examination will be determined by the contracting officer's inspectors. Ultrasonic examination can be used as a substitution for the radiographic examination.

HWMA/RCRA PART B PERMIT

FOR THE IDAHO NATIONAL LABORATORY

Volume 18 – Idaho Nuclear Technology and Engineering Center

APPENDIX 5

Debris Treatment Processes
Holdup and Collection Tanks
CPP-659/-1659 Storage
CPP-666 FDP Cell Container Storage and Slab Tank Storage
Other Miscellaneous Treatment Processes
RMWSF (CPP-1617) Container Storage Area

PHYSICAL PROPERTIES AND CHEMICAL RESISTANCE FOR SERIES 300 STAINLESS STEEL

Effective Date: April 27, 2009

TABLE 23-3 General Corrosion Properties of Some Metals and Alloys* (Continued)

Ratings:
0: Unsuitable. Not available in form required or not suitable for fabrication requirements or not suitable for corrosion conditions.
1: Poor to fair.
2: Fair. For mild conditions or when periodic replacement is possible. Restricted use.
3: Fair to good.
4: Good. Suitable when superior alternatives are uneconomic.
5: Good to excellent.
6: Normally excellent.

Small variations in service conditions may appreciably affect corrosion resistance. Choice of materials is therefore guided wherever possible by a combination of experience and laboratory and site tests.

Material	Nonoxidizing or reducing media				Liquids							Gases				
	Acid solutions, excluding hydrochloric, e.g., phosphoric, sulfuric, most conditions, many organics	Neutral solutions, e.g., many nonoxidizing salt solutions, chlorides, sulfates	Alkaline solutions, e.g.		Oxidizing media			Natural waters				Common industrial media				
			Caustic and mild alkalies, excluding ammonium hydroxide	Ammonium hydroxide and amines	Acid solutions, e.g., nitric	Neutral or alkaline solutions, e.g., persulfates, peroxides, chromates	Pitting media, acid ferric chloride solutions	Fresh-water supplies		Seawater		Steam		Furnace gases with incidental sulfur content		Ambient air, city or industrial
								Static or slow-moving	Turbulent	Static or slow-moving	Turbulent	Moist, condensate	Dry at high temperature, promoting slight oxidation	Reducing e.g., heat-treatment furnace gases	Oxidizing, e.g., flue gases	
Cast iron, flake graphite, plain or low-alloy	1	3	4	5	0	4	0	4	3	4	2	4	4	1	1	3
Ductile iron (higher strength and hardness may be attained by composition and heat treatment or both)	1	3	4	5	0	4	0	4	4	4	3	4	4	1	1	3
Ni-Resist corrosion-resistant cast irons	4	5	5	5	0	5	0	5	5	5	5	5	5	3	2	4
14% silicon iron	6	6	2	5	6	6	3	5	5	5	5	6	4	4	3	6
Mild steel, also low-alloy irons and steels	1	3	4	5	0	4	0	4	3	4	2	4	4	1	1	3
Stainless steel, ferritic 17% Cr type	2	4	4	6	5	6	0	4	6	1	4	5	6	3	2	4
Stainless steel, austenitic 18 Cr; 8 Ni type	3	4	5	6	6	6	0	6	6	2	5	6	6	2	3	5
Stainless steel, austenitic 18 Cr; 12 Ni; 2.5 Mo type	4	5	5	6	5	6	1	6	6	3	5	6	6	2	4	6
Stainless steel, austenitic 20 Cr; 29 Ni; 2.5 Mo; 3.5 Cu type	5	6	5	6	5	6	2	6	6	4	5	6	6	2	4	6
Incoloy 825 nickel-iron-chromium alloy (40 Ni; 21 Cr; 3 Mo; 1.5 Cu; balance Fe)	6	6	5	6	5	6	2	6	6	4	6	6	6	2	5	6
Hastelloy alloy C-276 (55 Ni; 17 Mo; 16 Cr; 6 Fe; 4 W)	5	6	5	6	4	6	5	6	6	6	6	6	6	3	4	6
Hastelloy alloy B-2 (61 Ni; 28 Mo; 6 Fe)	6	5	4	4	0	3	0	6	6	4	4	6	5	3	2	3
Inconel 600 (78 Ni; 15 Cr; 7 Fe)	3	6	6	6	3	6	1	6	6	4	6	6	6	2	4	6

Material	Gases (continued)				Available forms	Cold formability in wrought and clad form	Weldability	Maximum strength annealed condition × 1000 lb/in²	Coefficient of thermal expansion, millionths per °F, 70–212 °F	Remarks¶
	Halogens and derivatives									
	Halogens		Halide acids, moist, e.g., hydrochloric hydrolysis products of organic halides	Hydrogen halides, dry, i.e., dry hydrogen chloride, °F						
	Moist, e.g., chlorine below dew point	Dry, e.g., fluorine above dew point								
Cast iron, flake graphite, plain or low alloy	0	2	0	2 < 400 1 < 750	Cast	No	Fair§	45	6.7	
Ductile iron (higher strength and hardness may be obtained by composition and heat treatment or both)	0	2	0	2 < 400 1 < 750	Cast	No	Good§	67	7.5	
Ni-Resist corrosion-resistant cast irons	0	2	3	3 < 400 2 < 750	Cast	No	Good§	22–31	10.3	
Durion—14% silicon iron	0	0	4	1 < 400	Cast	No	No	22	7.4	Very brittle, susceptible to cracking by mechanical and thermal shock
Mild steel, also low-alloy irons and steels	0	3	0	3 < 400 1 < 750	Wrought, cast	Good	Good	67	6.7	High strengths obtainable by alloying, also improved atmospheric corrosion resistance. See ASTM specifications for particular grade
Stainless steel, ferritic 17% Cr type	0	2	0	2 < 400	Wrought, cast, clad	Good	Good§	78	6.0	AISI type 430 ASTM corrosion- and heat-resisting steels
Stainless steel, austenitic 18 Cr; 8 Ni types	0	2	0	3 < 400	Wrought, cast, clad	Good	Good	90	9.6	AISI type 304 ASTM corrosion- and heat-resisting steels; stabilized or LC types used for welding
Stainless steel, austenitic 18 Cr; 12 Ni; 2.5 Mo type	0	3	2	4 < 400 3 < 750	Wrought, cast, clad	Good	Good	90	8.9	AISI type 316 ASTM corrosion- and heat-resisting steel; LC type used for welding
Stainless steel, austenitic 20 Cr; 29 Ni; 2.5 Mo; 3.5 Cu type	1	3	3	4 < 400 3 < 750	Wrought, cast	Good	Good	90	9.4	ACI CN-7M; good resistance to sulfuric, phosphoric, and fatty acids at elevated temperatures
Inconel 825 nickel-iron-chromium alloy (40 Ni; 21 Cr; 3 Mo; 1.5 Cu; bal. Fe)	2	3	3	4 < 400 3 < 750	Wrought, cast, clad	Good	Good	100	7.3	Special alloy with good resistance to sulfuric, phosphoric, and fatty acids; resistant to chlorides in some environments
Hastelloy alloy C-276 (55 Ni; 17 Mo; 16 Cr; 6 Fe; 4 W)	5	4	4	4 < 750 3 < 900	Wrought, cast, clad	Fair	Good	145	6.3	Excellent resistance to wet chlorine gas and sodium hypochlorite solutions
Hastelloy alloy B-2 (61 Ni; 28 Mo; 6 Fe)	1	3	5	4 < 750 3 < 900	Wrought, cast, clad	Fair	Good	135	5.6	Resistant to solutions of hydrochloric and sulfuric acids
Inconel 600 (78 Ni; 15 Cr; 7 Fe)	2	5	3	5 < 400 4 < 900	Wrought, cast, clad	Good	Good	90	8.9	Wide application in food and pharmaceutical industries

TABLE 23-5 Coefficient of Thermal Expansion of Common Alloys*

	UNS	10^{-6} in/(in·°F)	10^{-6} mm/(mm·°C)	Temperature range, °C
Aluminum alloy AA1100	A91100	13.1	24.	20–100
Aluminum alloy AA5052	A95052	13.2	24.	20–100
Aluminum cast alloy 43	A24430	12.3	22.	20–100
Copper	C11000	9.4	16.9	20–100
Red brass	C23000	10.4	18.7	20–300
Admiralty brass	C44300	11.2	20.	20–300
Muntz Metal	C28000	11.6	21.	20–300
Aluminum bronze D	C61400	9.0	16.2	20–300
Ounce metal	C33600	10.2	18.4	0–100
90-10 copper nickel	C70600	9.5	17.1	20–300
70-30 copper nickel	C71500	9.0	16.2	20–300
Carbon steel, AISI 1020	G10200	6.7	12.1	0–100
Gray cast iron	F10006	6.7	12.1	0–100
4-6 Cr, ½ Mo steel	S50100	7.3	13.1	20–540
Stainless steel, AISI 410	S41000	6.1	11.0	0–100
Stainless steel, AISI 446	S44600	5.8	10.4	0–100
Stainless steel, AISI 304	S30400	9.6	17.3	0–100
Stainless steel, AISI 310	S31000	8.0	14.4	0–100
Stainless steel, ACI HK	J94224	9.4	16.9	20–540
Nickel alloy 200	N02200	7.4	13.3	20–90
Nickel alloy 400	N04400	7.7	13.9	20–90
Nickel alloy 600	N06600	7.4	13.3	20–90
Nickel-molybdenum alloy B-2	N10665	5.6	10.1	20–90
Nickel-molybdenum alloy C-276	N10276	6.3	11.3	20–90
Titanium, commercially pure	R50250	4.8	8.6	0–100
Titanium alloy T1-6A1-4V	R56400	4.9	8.8	0–100
Magnesium alloy AZ31B	M11311	14.5	26.	20–100
Magnesium alloy AZ91C	M11914	14.5	26.	20–100
Chemical lead	.....	16.4	30.	0–100
50-50 solder	L05500	13.1	24.	0–100
Zinc	Z13001	18.	32.	0–100
Tin	L13002	12.8	23.	0–100
Zirconium	R60702	2.9	5.2	0–100
Molybdenum	R03600	2.7	4.9	20–100
Tantalum	R05200	3.6	6.5	20–100

*Courtesy of National Association of Corrosion Engineers.

TABLE 23-6 Melting Temperatures of Common Alloys*

	UNS	Melting range °F	Melting range °C
Aluminum alloy AA1100	A91100	1190–1215	640–660
Aluminum alloy AA5052	A95052	1125–1200	610–650
Aluminum cast alloy 43	A24430	1065–1170	570–630
Copper	C11000	1980	1083
Red brass	C23000	1810–1850	990–1025
Admiralty brass	C44300	1650–1720	900– 935
Muntz Metal	C28000	1650–1660	900– 905
Aluminum bronze D	C61400	1910–1940	1045–1060
Ounce metal	C33600	1510–1640	854–1010
Manganese bronze	C36500	1583–1616	862– 880
90-10 copper nickel	C70600	2010–2100	1100–1150
70-30 copper nickel	C71500	2140–2250	1170–1240
Carbon steel, AISI 1020	G10200	2760	1520
Gray cast iron	F10006	2100–2200	1150–1200
4-6 Cr, ½ Mo Street	S50100	2700–2500	1450–1540
Stainless steel, AISI 410	S41000	2700–2790	1480–1530
Stainless steel, AISI 446	S44600	2600–2730	1430–1510
Stainless steel, AISI 304	S30400	2550–2550	1400–1450
Stainless steel, AISI 310	S31000	2500–2650	1400–1450
Stainless steel, ACI HK	J94224	2550	1400
Nickel alloy 200	N02200	2615–2635	1440–1450
Nickel alloy 400	N04400	2370–2460	1300–1350
Nickel alloy 600	N06600	2470–2573	1350–1410
Nickel-molybdenum alloy B-2	N10665	2373–2495	1300–1370
Nickel-molybdenum alloy C-276	N10276	2420–2500	1320–1370
Titanium, commercially pure	R50250	3100	1705
Titanium alloy T1-6A1-4V	R56400	2920–3020	1600–1660
Magnesium alloy AZ 31B	M11311	1120–1170	605– 632
Magnesium alloy HK 31A	M13310	1092–1204	589– 651
Chemical lead	.....	618	326
50-50 solder	L05500	361– 421	183– 216
Zinc	Z13001	787	420
Tin	Z13002	450	232
Zirconium	R60702	3350	1860
Molybdenum	R03600	4750	2610
Tantalum	R05200	5425	2996

*Courtesy of National Association of Corrosion Engineers.

TABLE 23-12 Standard Wrought Austenitic Stainless Steels*

AISI type	UNS	Composition, %† Cr	Ni	Mo	C	Si	Mn	Other	Mechanical properties‡ Yield strength, kip/in² (MPa)	Tensile strength, kip/in² (MPa)	Elongation, %	Hardness, HB
201	S20100	16–18	3.5–5.5	...	0.15	1.0	5.5–7.5	0.25 N	53 (379)	115 (793)	55	155
202	S20200	17–19	4–6	...	0.15	1.0	7.5–10.	0.25 N	53 (379)	105 (724)	55	155
301	S30100	16–18	6–8	...	0.15	1.0	2.0	...	40 (276)	105 (724)	55	165
302	S30200	17–19	8–10	...	0.15	1.0	2.0	...	35 (241)	90 (621)	60	150
302B	S30215	17–19	8–10	...	0.15	2.0–3.0	2.0	...	40 (276)	90 (621)	50	165
303	S30300	17–19	8–10	0.6	0.15	1.0	2.0	0.15 S,§ 0.2 P	35 (241)	90 (621)	50	160
303Se	S30323	17–19	8–10	...	0.15	1.0	2.0	0.15 Se,§ 0.2 P	35 (241)	90 (621)	50	160
304	S30400	18–20	8–10.5	...	0.08	1.0	2.0	...	35 (241)	82 (565)	60	149
304L	S30403	18–20	8–12	...	0.03	1.0	2.0	...	33 (228)	79 (545)	60	145
304N	S30451	18–20	8–10.5	...	0.08	1.0	2.0	0.10–0.16 N	48 (331)	90 (621)	50	180
308	S30800	19–21	10–12	...	0.08	1.0	2.0	...	30 (207)	85 (586)	55	150
309	S30900	22–24	12–15	...	0.20	1.0	2.0	...	40 (276)	95 (655)	45	170
309S	S30908	22–24	12–15	...	0.08	1.0	2.0	...	40 (276)	95 (655)	45	170
310	S31000	24–26	19–22	...	0.25	1.5	2.0	...	45 (310)	95 (655)	50	170
310S	S31008	24–26	19–22	...	0.08	1.5	2.0	...	45 (310)	95 (655)	50	170
314	S31400	23–26	19–22	...	0.25	1.5–3.0	2.0	...	50 (345)	100 (609)	45	180
316	S31600	16–18	10–14	2.0–3.0	0.08	1.0	2.0	...	36 (248)	82 (565)	55	149
316L	S31603	16–18	10–14	2.0–3.0	0.03	1.0	2.0	...	34 (234)	81 (558)	55	146
316N	S31651	16–18	10–14	2.0–3.0	0.08	1.0	2.0	0.10–0.16 N	42 (290)	90 (621)	55	150
317	S31700	18–20	11–15	3.0–4.0	0.08	1.0	2.0	...	40 (276)	85 (586)	50	160
317L	S31703	18–20	11–15	3.0–4.0	0.03	1.0	2.0	...	35 (241)	85 (586)	55	150
321	S32100	17–19	9–12	...	0.08	1.0	2.0	(5 × C) Ti§	30 (207)	85 (586)	55	160
329	S32900	25–30	3–6	1.0–2.0	0.10	1.0	2.0	...	80 (552)	105 (724)	25	230
347	S34700	17–19	9–13	...	0.08	1.0	2.0	(10 × C)(Cb + Ta)§	35 (241)	90 (621)	50	160
348	S34800	17–19	9–13	...	0.08	1.0	2.0	(10 × C)(Cb + Ta)¶ 0.20 Co	35 (241)	90 (621)	50	160

*Courtesy of National Association of Corrosion Engineers. To convert megapascals to pounds-force per square inch, multiply by 145.04.
†Single values are maximum values unless otherwise noted.
‡Typical room-temperature properties of solution-annealed plates.
§Minimum.
¶Minimum except Ta = 0.1 maximum.

TABLE 23-15 Standard Cast Corrosion-Resistant Stainless Steels*

ACI	Equivalent AISI	UNS	Composition, %† Cr	Ni	Mo	C	Mn	Si	Other	Mechanical properties‡ Yield strength, kip/in² (MPa)	Tensile strength, kip/in² (MPa)	Elongation, %	Hardness HB
CA-15	410	J91150	11.5–14	1.0	0.5	0.15	1.00	1.50	.....	150 (1034)§	200 (1379)§	7§	390§
CA-15M	...	J91151	11.5–14	1.0	0.15–1.0	0.15	1.00	1.50	.....	150 (1034)§	200 (1379)§	7§	390§
CA-6NM	...	J91540	11.5–14	3.5–4.5	0.4–1.0	0.06	1.00	1.00	.....	100 (690)#	120 (827)#	4#	269#
CA-40	420	J91153	11.5–14	1.0	0.5	0.20–0.40	1.00	1.50	.....	165 (1138)§	220 (1517)§	1§	470§
CB-30	431	J91803	18.21	2.0	....	0.30	1.00	1.50	.....	60 (414)§	95 (655)§	15§	195§
CC-50	446	J92615	26–30	4.0	....	0.50	1.00	1.50	.....	65 (448)/	97 (669)/	18/	210/
CE-30	312	J93423	26–30	8–11	....	0.30	1.50	2.00	.....	63 (434)	97 (669)	18	190
CB-7Cu	(17–4PH)	.....	(16)	(4)	....	0.07	....	....	(3) Cu	165 (1138)	.....	3	415
CD-4MCu	...	.....	25–28.5	4.75–6.0	1.75–2.25	0.04	1.00	1.00	2.75–3.25 Cu	82 (565)	108 (745)	25	253
CF-3	304L	J92500	17–21	8–12	....	0.03	1.50	2.00	.....	36 (248)	77 (531)	60	140
CF-8	304	J92600	18–21	8–11	....	0.08	1.50	2.00	.....	37 (255)	77 (531)	55	140
CF-20	302	J92602	18–21	8–11	....	0.20	1.50	2.00	.....	36 (248)	77 (531)	50	163
CF-3M	316L	J92800	17–21	9–13	2.0–3.0	0.03	1.50	1.50	.....	38 (262)	80 (552)	55	150
CF-8M	316	J92900	18–21	9–12	2.0–3.0	0.08	1.50	2.00	.....	42 (290)	80 (552)	50	160
CF-12M	...		18–21	9–12	2.0–3.0	0.12	1.50	2.00	.....	42 (290)	80 (552)	50	160
CG-12	317	J93000	18–21	9–13	3.0–4.0	0.08	1.50	1.50	.....	44 (303)	83 (572)	45	170
CF-8C	347	J92710	18–21	9–12	....	0.08	1.50	2.00	(8 × C) Cb#	38 (262)	77 (531)	39	149
CF-16F	303	J92701	15–21	9–12	1.50	0.16	1.50	2.00	.....	40 (276)	77 (531)	32	150
CG-12	...	J93001	20–23	10–13	....	0.12	1.50	2.00	.....	28 (193)	.....	35	
CH-20	309	J93402	22–26	12–15	....	0.20	1.50	2.00	.....	50 (345)	88 (607)	35	190
CK-20	310	J94202	23–27	19–22	....	0.20	1.50	2.00	.....	38 (262)	75 (524)	37	144
CN-7M	...	J95150	19–22	27.5–30.5	2.0–3.0	0.07	1.50	1.50	3–4 Cu	32 (221)	69 (476)	45	150

*Courtesy of National Association of Corrosion Engineers. To convert megapascals to pounds-force per square inch, multiply by 145.04.
†Single values are maximum values except those in parentheses, which are minimum values. P and S values are 0.04 maximum.
‡Typical room-temperature properties for solution-annealed material unless otherwise noted.
§For material air-cooled from 1500°F and tempered at 600°F.
#For material air-cooled from 1750°F and tempered at 1100 to 1150°F.
/For material annealed at 1450°F, furnace-cooled to 1000°F, then air-cooled.
#1.0 maximum.

Corrosion mediums	Test conditions: Industry (process)	Type of test	Average temperature (F)	Duration (days)	Aeration	Agitation	Average corrosion rates (ipy): Type 304	Type 316	Type 317	"20"	Ni-O-Nel
50%	Research	L	98	6	xx	—	...	<0.0001	...	...	...
42%	Research	L	200	...	..	..	0.0033	0.0042	...	...	...
40%	Research	L	98	6	xx	—	...	<0.0001	...	...	...
30%	Research	L	98	6	xx	—	...	<0.0001	...	...	...
25%	Research	L	130	...	—	—	0.0002	0.0001	...	...	...
20%	Research	L	98	6	xx	—	...	<0.0001	...	...	...
10%	Research	L	98	6	xx	—	...	<0.0001	...	...	...
10%	Research	L	212	6	xx	—	...	0.0002	...	...	...
10%	Chemical	L	B.P.	30	..	..	0.0003	...	...	...	...
10%	Research	L	75	1	..	..	...	...	...	...	<0.0001
10%	Research	L	150	1	..	..	...	...	...	...	<0.0001
10%	Mining	F	120	70	xx	—	<0.0001	<0.0001	...	...	...
6%	Research	L	210	2	..	..	...	nil	...	...	...
5%	Research	L	98	6	xx	—	...	<0.0001	...	...	...
5%	Research	L	212	6	xx	—	...	0.0002	...	...	...
5%	Metal	L	86	14	xx	xx	<0.0001 L<0.0001	...	...	...	...
5%	Metal	L	140	14	xx	xx	<0.0001 L<0.0001	...	...	...	...
5%	Metal	L	195	14	xx	xx	<0.0001 L<0.0001	...	...	...	...

HWMA/RCRA PART B PERMIT

FOR THE IDAHO NATIONAL LABORATORY

Volume 18 – Idaho Nuclear Technology and Engineering Center

APPENDIX 6

Debris Treatment Processes
Holdup and Collection Tanks
CPP-659/-1659 Storage
CPP-666 FDP Cell Container Storage and Slab Tank Storage
Other Miscellaneous Treatment Processes
RMWSF (CPP-1617) Container Storage Area

PE CERTIFICATION OF SINKS, ULTRASONIC CLEARNER,
AND HOLDUP/COLLECTION TANKS

Effective Date: April 27, 2009

NEW WASTE CALCINING FACILITY (CPP-659) TANK SYSTEMS P.E. CERTIFICATION REPORT for the RCRA PART B PERMIT APPLICATION for the INEL (Vol. 18)

Prepared By: Keith D. Hendrickson. P.E.
Idaho Registration Number 7765
Science Applications International Corp.

I certify that the design of the identified hazardous waste liquid tank systems in the New Waste Calcining Facility (CPP-659) at the Idaho Chemical Processing Plant (ICPP) at the Idaho National Engineering Laboratory (INEL) comply with the requirements of 40 CFR-264.190 Subpart J - Tank Systems for the storage and treatment of hazardous wastes in tank systems.

The following tank systems are certified for the storage and treatment of hazardous wastes:

Sink (SH-NCD-933) in CPP-659 room 415.
Sink (SH-NCD-934) in CPP-659 room 415.
Ultrasonic Cleaner (UC-NCD-921) in CPP-659 room 415.
Decon Hold-up Tank (VES-NCD-123) in CPP-659 room 219.
Decon Collection Tank (VES-NCD-129) in CPP-659 room 203.

The underground portions of the Decon Hold-up Tank and the Decon Collection Tank ancillary piping to the tank farm (1 ½"-PLAD-2628) and to the PEW evaporator (1 ½"-PLAD-2629) are not covered by the Vol. 18 Part B RCRA permit application, and were therefore not assessed.

Sink (SH-NCD-933)

Description:

Sink (SH-NCD-933) is a 16 gauge series 300 stainless steel sink. 9'-11" x 2'-0" x 1'-6" deep. The sink is recessed in the counter of a hood that protects the room from spills and fumes from the sink. The sink is provided with a 1 ½" drain line that drains to the Decon Hold-up Tank (VES-NCD-123). Air emissions from the hood are vented to the vent air scrubber system. Decon solutions and water are provided inside the hood for use in the sink.

ASSESSMENT OF EXISTING TANK SYSTEM (40 CFR-264.191) :

Design Standards:

The standard used for the series 300 stainless steel material to construct the sink is:

American Society for Testing and Materials (ASTM)
ASTM A167 Stainless and Heat Resisting Chromium-Nickel Steel Plate, Sheet, and Strip

The codes and standards used for the design and construction of the sink are unknown.

Hazardous Characteristics of Waste:

Table 1 lists all treatment processes, the treatment solutions, the hazardous characteristics of the solutions, and the solution's corrosivity to series 300 stainless steel.

Corrosion Protection Measures:

Corrosion protection for the sink is provided by materials of construction and corrosion allowances. Materials of construction were selected based on suitability for process service and compatibility with the treatment solutions. Series 300 stainless steel was selected for use in the sink. The corrosivity of the treatment solutions to stainless steel is listed in Table 1.

Age:

Sink (SH-NCD-933) was placed into service in 1982.

Integrity Examinations:

When in use, the sink is examined daily for signs of cracks, leaks, and corrosion. All signs of integrity deterioration are reviewed and corrective action taken.

Ancillary Equipment:

Ancillary equipment for the sink includes lines 1 ½"-PLAD-2640, 1 ½"-PLAD-4206, 3"-PLAD-4206, and 3"-PLAD-4211 which drain the sink to the Decon Hold-up Tank (VES-NCD-123).

CONTAINMENT AND DETECTION OF RELEASES (40 CFR-264.193):

Secondary Containment:

The secondary containment for sink (SH-NCD-933) is a 12'-0" x 31'-6" area in the Low Level Decon Room on the first level of CPP-659. The secondary containment area is separated from the rest of the room by a 10 GA stainless steel wall that forms part of the containment. The rest of the containment is provided by a 10 GA stainless steel floor liner and 6" curb on the outer wall.

The capacity of the sink is 237 gallons (31.7 ft^3).

The capacity of the curbed area is 1,337 gallons (178.8 ft^3), see Calculation #1.

Ancillary Equipment:

The sink drainage piping that is outside the curbed area in Low Level Decon Room is doubly encased until it reaches the decon hold-up tank cell. Here, the pipe encasement is diverted to the cell's collection trench and the piping continues into the hold-up tank. The cell provides the secondary containment for the piping while in the cell. The cell trench drains to the Hot Sump Tank (VES-NCC-122) through 3"-PLAD-4215. The trench drain is provided with a level sensor (LE-219) that will activate alarm L-NC-219C in the NWCF control room if the sink drain pipe leaks. The cell and trench liner, the sink drain pipe encasement, the trench drain pipe, and the hot sump tank are all constructed of stainless steel.

Sink (SH-NCD-934)

Description:

Sink (SH-NCD-934) is a 16 gauge series 300 stainless steel sink. 18" x 20" x 18" deep. The sink is recessed in the counter of a hood that protects the room from spills and fumes from the sink. The sink is provided with a 1 ½" drain line that drains to the Decon Hold-up Tank (VES-NCD-123). Air emissions from the hood are vented to the vent air scrubber system. Decon solutions and water are provided inside the hood for use in the sink.

ASSESSMENT OF EXISTING TANK SYSTEM (40 CFR-264.191) :

Design Standards:

The standard used for the series 300 stainless steel material to construct the sink is:

American Society for Testing and Materials (ASTM)
ASTM A 167 Stainless and Heat Resisting Chromium-Nickel Steel Plate, Sheet, and Strip

The codes and standards used for the design and construction of the sink are unknown.

Hazardous Characteristics of Waste:

Table 1 lists all treatment processes, the treatment solutions, the hazardous characteristics of the solutions, and the solution's corrosivity to series 300 stainless steel.

Corrosion Protection Measures:

Corrosion protection for the sink is provided by materials of construction and corrosion allowances. Materials of construction were selected based on suitability for process service and compatibility with the treatment solutions. Series 300 stainless steel was selected for use in the sink. The corrosivity of the treatment solutions to stainless steel is listed in Table 1.

Age:

Sink (SH-NCD-934) was placed into service in 1982.

Integrity Examinations:

When in use, the sink is examined daily for signs of cracks, leaks, and corrosion. All signs of integrity deterioration are reviewed and corrective action taken.

Ancillary Equipment:

Ancillary equipment for the sink includes lines 1 ½"-PLAD-2641, 1 ½"-PLAD-4206, 3"-PLAD-4206, and 3"-PLAD-4211 which drain the sink to the Decon Hold-up Tank (VES-NCD-123).

CONTAINMENT AND DETECTION OF RELEASES (40 CFR-264.193):

Secondary Containment:

The secondary containment for sink (SH-NCD-934) is a 12'-0" x 31'-6" area in the Low Level Decon Room on the first level of CPP-659. The secondary containment area is separated from the rest of the room by a 10 GA stainless steel wall that forms part of the containment. The rest of the containment is provided by a 10 GA stainless steel floor liner and 6" curb on the outer wall.

The capacity of the sink is 28 gallons (3.7 ft^3).

The capacity of the curbed area is 1,337 gallons (178.8 ft^3), see Calculation#1.

Ancillary Equipment:

The sink drainage piping that is outside the curbed area in Low Level Decon Room is doubly encased until it reaches the decon hold-up tank cell. Here, the pipe encasement is diverted to the cell's collection trench and the piping continues into the hold-up tank. The cell provides the secondary containment for the piping while in the cell. The cell trench drains to the Hot Sump Tank (VES-NCC-122) through 3"-PLAD-4215. The trench drain is provided with a level sensor (LE-219) that will activate alarm L-NC-219C in the NWCF control room if the sink drain pipe leaks. The cell and trench liner, the sink drain pipe encasement, the trench drain pipe, and the hot sump tank are all constructed of stainless steel.

Ultrasonic Cleaner (UC-NCD-921)

Description:

Ultrasonic Cleaner (UC-NCD-921) is a 16 gauge series 300 stainless steel sink, 2'-2" x 2'-2" x 2'-3"" deep. The sink is built into a protective box with a hood that protects the room from spills and fumes from the cleaner. The cleaner is provided with a 1 ½" drain line that drains to the Decon Hold-up Tank (VES-NCD-123). Air emissions from the hood are vented to the vent air scrubber system.

ASSESSMENT OF EXISTING TANK SYSTEM (40 CFR-264.191) :

Design Standards:

The standard used for the series 300 stainless steel material to construct the ultrasonic cleaner is:

American Society for Testing and Materials (ASTM)
ASTM A167 Stainless and Heat Resisting Chromium-Nickel Steel Plate, Sheet, and Strip

The codes and standards used for the design and construction of the ultrasonic cleaner are unknown.

Hazardous Characteristics of Waste:

Table 1 lists all treatment processes, the treatment solutions, the hazardous characteristics of the solutions, and the solution's corrosivity to series 300 stainless steel.

Corrosion Protection Measures:

Corrosion protection for the ultrasonic cleaner is provided by materials of construction and corrosion allowances. Materials of construction were selected based on suitability for process service and compatibility with the treatment solutions. Series 300 stainless steel was selected for use in the ultrasonic cleaner. The corrosivity of the treatment solutions to stainless steel is listed in Table 1.

Age:

Ultrasonic Cleaner (UC-NCD-921) was placed into service in 1982.

Integrity Examinations:

When in use, the ultrasonic cleaner is examined daily for signs of cracks, leaks, and corrosion. All signs of integrity deterioration are reviewed and corrective action taken.

Ancillary Equipment:

Ancillary equipment for the ultrasonic cleaner includes lines 1 ½"-PLAD-2643, 3"-PLAD-4206, and 3"-PLAD-4211 which drain the cleaner to the Decon Hold-up Tank (VES-NCD-123).

CONTAINMENT AND DETECTION OF RELEASES (40 CFR-264.193):

Secondary Containment:

The secondary containment for the ultrasonic cleaner (UC-NCD-921) is a 12'-0" x 31'-6" area in the Low Level Decon Room on the first level of CPP-659. The secondary containment area is separated from the rest of the room by a 10 GA stainless steel wall that forms part of the containment. The rest of the containment is provided by a 10 GA stainless steel floor liner and 6" curb on the outer wall.

The capacity of the ultrasonic cleaner is 79 gallons (10.6 ft^3).

The capacity of the curbed area is 1,337 gallons (178.8 ft^3). see Calculation#1.

Ancillary Equipment:

The cleaner drainage piping that is outside the curbed area in Low Level Decon Room is doubly encased until it reaches the decon hold-up tank cell (room 219). Here, the pipe encasement is diverted to the cell's collection trench and the piping continues into the hold-up tank. The cell provides the secondary containment for the piping while in the cell. The cell trench drains to the Hot Sump Tank (VES-NCC-122) through 3"-PLAD-4215. The trench drain is provided with a level sensor (LE-219) that will activate alarm L-NC-219C in the NWCF control room if the cleaner drain pipe leaks. The cell and trench liner, the sink drain pipe encasement, the trench drain pipe, and the hot sump tank are all constructed of stainless steel.

Decon Hold-up Tank (VES-NCD-123)

Description:

Decon Hold-up Tank (VES-NCD-123) is a 304L stainless steel tank, 7'-0" diameter by 9'-0" long tangent to tangent, with a capacity of 3,800 gallons (508 ft^3). The tank is horizontally mounted with a support saddle at both ends. The tank is provided with a 2" drain line that goes to Decon Hold-up Tank Pump (P-NCD-223).

ASSESSMENT OF EXISTING TANK SYSTEM (40 CFR-264.191) :

Design Standards:

The standard used for the series 300 stainless steel material to construct the tank is:
American Society for Testing and Materials (ASTM)
ASTM A167 Stainless and Heat Resisting Chromium-Nickel Steel Plate, Sheet, and Strip

The code used for the design and construction of the tank is:
American Society of Mechanical Engineers (ASME)
ASME Boiler and Pressure Vessel Code, Section VIII, Div. 1, Pressure Vessels

Hazardous Characteristics of Waste:

Table 1 lists all treatment processes, the treatment solutions, the hazardous characteristics of the solutions, and the solution's corrosivity to series 300 stainless steel.

Corrosion Protection Measures:

Corrosion protection for the tank is provided by materials of construction and a 0.135" corrosion and cleaning allowance. Materials of construction were selected based on suitability for process service and compatibility with the treatment solutions. Series 300 stainless steel was selected for use in the tank. The corrosivity of the treatment solutions to stainless steel is listed in Table 1.

Age:

Decon Hold-up Tank (VES-NCD-123) was placed into service in 1982.

Integrity Examinations:

The tank is continuously monitored for leaks by the drain line 3"-PLAD-4215 level sensor (LE-219) which will activate alarm L-NC-219C in the NWCF control room if the tank leaks. The tank is examined during each cell entry for signs of cracks, leaks, and corrosion. All signs of integrity deterioration are reviewed and corrective action taken.

Ancillary Equipment:

Ancillary equipment for the Decon Hold-up Tank includes the tank drain line (2"-PLAD-2631) which runs to the Decon Hold-up Tank Pump (P-NCD-223), and the following lines which run from the pump to the listed designations:

1 ½"-PLAD-2632	to	1 ½"-PLAD-2628	to the Tank Farm
1 ½"-PLAD-2634	to	1 ½"-PLAD-2629	to the PEW Evaporator
1 ½"-SWAD-2633	to	4"-SWNB-4157	to the Service Waste System *

* This line has a blind flange between lines 1 ½"-SWAD-2633 and 4"-SWNB-4157 to prevent transfers to the service waste system.

CONTAINMENT AND DETECTION OF RELEASES (40 CFR-264.193):

Secondary Containment:

The secondary containment for Decon Hold-up Tank (VES-NCD-123) is the Decon Hold-up Tank Cell (Room 219), the Manipulator Parking and Maintenance Area (Room 218), and the Filter Cell and Lower Valve Cubicle (Room 216) on the third level of CPP-659. The Hold-up Tank Cell is 14'-4" x 14'-9", the Manipulator Parking and Maintenance Area is 12'-8" x 16'-2", the Filter Cell is 22'-6" x 13'-2", and the Lower Valve Cubicle is 27'-8" x 9'-9". All four areas have a stainless steel floor liner, and a curb that is 6" above the high point of the floor.

The capacity of the hold-up tank cell is 3,800 gallons (508 ft^3).

The capacity of the hold-up tank secondary containment is 4,685 gallons (626.4 ft^3), see Calculation #2.

The hold-up tank cell's trench drains to the Hot Sump Tank (VES-NCC-122) through 3"-PLAD-4215. The drain is provided with a level sensor (LE-219) that will activate alarm L-NC-219C in the NWCF control room if the tank leaks. The manipulator parking and maintenance area's trench drains to the hot sump tank through 2"-PLAD-4213 and 3"-PLAD-4212. The filter cell's trench drains to the hot sump tank through 3"-PLAD-4212. The lower valve cubicle's trench drains to the hot sump tank (VES-NCC-119) through 3"-PLAD-4220. The cell and trench liners, the trench drain pipes, and the hot sump tanks are all constructed of stainless steel.

Ancillary Equipment:

The tank ancillary equipment secondary containment is provided by the Decon Hold-up Tank Cell, the Decon Collection Tank & Pump Cell, and the Lube Oil Console Room.

At the point where lines 1 ½"-PLAD-2629 to the PEW Evaporator, and 1 ½"-PLAD-2628 to the Tank Farm leave the pump cell, they are no longer covered by the Vol. 18 Part B permit application.

Line 1 ½"-SWAD-2633 to the service waste system (4"-SWNB-4157) is blind flanged in the Lube Oil Console Room to prevent transfers to the service waste system. After the blind flange, the line is considered part of the service waste system and not covered by this application.

The cell trenches drain to the Hot Sump Tank (VES-NCC-122) through 3"-PLAD-4215. The trench drain is provided with a level sensor (LE-219) that will activate alarm L-NC-219C in the NWCF control room if the ancillary equipment leaks. The cell and trench liner, the trench drain pipe, and the hot sump tank are all constructed of stainless steel.

Decon Collection Tank (VES-NCD-129)

Description:

Decon Collection Tank (VES-NCD-129) is a 304L stainless steel tank, 4'-0" diameter by 5'-6" tall tangent to tangent, with a capacity of 530 gallons (71 ft^3). The tank is vertically mounted with four support legs. The tank is provided with a 2" drain line that goes to Decon Collection Tank Pump (P-NCD-229).

ASSESSMENT OF EXISTING TANK SYSTEM (40 CFR-264.191) :

Design Standards:

The standard used for the series 300 stainless steel material to construct the tank is:
American Society for Testing and Materials (ASTM)
ASTM A167 Stainless and Heat Resisting Chromium-Nickel Steel Plate, Sheet, and Strip

The code used for the design and construction of the tank is:
American Society of Mechanical Engineers (ASME)
ASME Boiler and Pressure Vessel Code, Section VIII, Div. 1, Pressure Vessels

Hazardous Characteristics of Waste:

Table 1 lists all treatment processes, the treatment solutions, the hazardous characteristics of the solutions, and the solution's corrosivity to series 300 stainless steel.

Corrosion Protection Measures:

Corrosion protection for the tank is provided by materials of construction and a 0.135" corrosion and cleaning allowance. Materials of construction were selected based on suitability for process service and compatibility with the treatment solutions. Series 300 stainless steel was selected for use in the tank. The corrosivity of the treatment solutions to stainless steel is listed in Table 1.

Age:

Decon Collection Tank (VES-NCD-129) was placed into service in 1982.

Integrity Examinations:

The tank is continuously monitored for leaks by the drain line 3"-PLAD-4215 level sensor (LE-219) which will activate alarm L-NC-219C in the NWCF control room if the tank leaks. The tank is examined during each cell entry for signs of cracks, leaks, and corrosion. All signs of integrity deterioration are reviewed and corrective action taken.

Ancillary Equipment:

Ancillary equipment for the Decon Collection Tank includes the tank drain line (2"-PLAD-2627) which runs to the Decon Collection Tank Pump (P-NCD-229), and the following lines which run from the pump to the listed designations:

1 ½"-PLAD-2628	to the Tank Farm
1 ½"-PLAD-2629	to the PEW Evaporator
1 ½"-PLAD-2630	to the Decon Hold-up Tank
1 ½"-DCAF-2635	to the Decon Cell (abandoned in place)

CONTAINMENT AND DETECTION OF RELEASES (40 CFR-264.193):

Secondary Containment:

The secondary containment for Decon Collection Tank (VES-NCD-129) is the Decon Collection Tank and Pump Cell on the third level of CPP-659. The collection tank area is approximately 7'-10" x 10'-0", and the pump area is approximately 5'-0" x 10'-0". Both areas are provided with a 10 GA stainless steel floor liner, and a curb that is 6" above the high point of the floor.

The capacity of the Decon Collection Tank is 530 gallons (71 ft^3).

The capacity of the collection tank secondary containment is 593 gallons (79.3 ft^3), see Calculation #3.

The decon collection tank and pump cell trenches drain to the Hot Sump Tank (VES-NCC-122) through 3"-PLAD-4215. The drain is provided with a level sensor (LE-219) that will activate alarm L-NC-219C in the NWCF control room if the tank leaks. The cell and trench liners, the trench drain pipes, and the hot sump tank are all constructed of stainless steel.

Ancillary Equipment:

The tank ancillary equipment secondary containment is provided by the Decon Collection Tank & Pump Cell, and the Decon Hold-up Tank Cell.

At the point where lines 1 ½"-PLAD-2629 to the PEW Evaporator, and 1 ½"-PLAD-2628 to the Tank Farm leave the pump cell, they are no longer covered by the Vol. 18 Part B permit application.

Line 1 ½"-DCAF-2635 from the decon collection tank pump (P-NCD-229) to the Decon Cell is abandoned in place and is no longer used.

The trenches in the collection tank and pump areas drain to the Hot Sump Tank (VES-NCC-122) through 3"-PLAD-4215. The trench drains are provided with a level sensor (LE-219) that will activate alarm L-NC-219C in the NWCF control room if the ancillary equipment leaks. The cell and trench liner, the trench drain pipe, and the hot sump tank are all constructed of stainless steel.

Calculation #1

Sinks and Ultrasonic Cleaner Secondary Containment

Description:

The secondary containment for the sinks (SH-NCD-933 & SH-NCD-934) and the ultrasonic cleaner (UC-NCD-921) is a curbed area in the Low Level Decon Room on the first level of CPP-659. The curbed area has two sections which are approximately 12'-0" x 16'-0" and 10'-6" x 16'-0". The curbed area is constructed of stainless steel, and the curb is 6" above the high point of the floor. The curbed area is not sloped, and does not have a floor drain.

Sink (SH-NCD-933) has a capacity of 237 gal. (31.7 ft^3).
Sink (SH-NCD-934) has a capacity of 28 gal. (3.7 ft^3).
Ultrasonic Cleaner (UC-NCD-921) has a capacity of 79 gal. (10.6 ft^3).

Elevations:

Top of curb	-	4917'-6"
Top of floor	-	4917'-0"

Volume:

Volume from floor to top of curb

V_{s1}	=	12'-0" x 16'-0" x 0'-6"	=	96.0 ft^3
V_{s2}	=	10'-6" x 16'-0" x 0'-6"	=	84.0 ft^3

Volume removed due to wall footings

V_{f1}	=	1'-6" x 0'-6" x 0'-6"	=	0.375 ft^3
V_{f2}	=	1'-6" x 0'-6" x 0'-6"	=	0.375 ft^3
V_{f3}	=	1'-0" x 1'-0" x 0'-6"	=	0.500 ft^3

Total volume available for secondary containment for the Sinks and Ultrasonic Cleaner

Vol = 178.8 ft^3 (1,337 gal.)

Calculation #2

Decon Hold-up Tank (VES-NCD-123) Secondary Containment

The Decon Hold-up Tank is a 304L stainless steel tank, 7'-0" diameter by 9'-0" long tangent to tangent, with a capacity of 3,800 gallons (508 ft^3). The secondary containment for this tank is the Decon Hold-up Tank Cell, the Manipulator Parking and Maintenance Area, the Filter Cell, and the Lower Valve Cubicle on the third level of CPP-659. After a tank rupture, the hold-up tank cell will fill up to the bottom of the door to the manipulator room. The manipulator room will then fill up to the bottom of the door to the filter cell. The filter cell and valve cubicle will then fill until the total volume in the tank is contained.

Decon Hold-up Tank Cell

Description:

The decon hold-up tank cell is 14'-9" x 14'-4", lined with 10 GA stainless steel, and sloped from the north wall to a 1' wide trench along the south wall of the cell. The cell has a curb that is 6" above the floor, two 1'-0" x 7'-8" pedestals for the hold-up tank, and a door in the north wall to the manipulator parking room.

Elevations:

Bottom of door to manipulator room	-	4882'-3"
Bottom of curb & top of sloped floor	-	4881'-6"
Bottom of sloped floor	-	4881'-4"
Bottom of trench	-	4880'-9" (average)

Volume:

Volume above floor to bottom of curb

V_{fl} = ½ x 13'-9" x 14'-4" x 0'-2" = 16.4 ft^3

Volume in and above trench to bottom of curb

V_{tl} = 1'-0" x 14'-4" x 0'-9" = 10.7 ft^3

Volume from bottom of curb to the bottom of the door

V_{cl} = 14'-9" x 14'-4" x 0'-9" = 158.6 ft^3

Volume removed due to pedestals

V_{pl} = 2 x 1'-0" x 7'-8" x 0'-11" = 14.0 ft^3

Total Volume available in the Decon Hold-up Tank Cell

V_t = **171.7 ft^3 (1,284 gallons)**

Manipulator Parking and Maintenance Area

Description:

The manipulator parking and maintenance area is 12'-8" x 16'-2". The room is lined with 10 GA stainless steel, and sloped from the west wall to a 1' wide trench near the east wall of the cell. The cell floor is at four different elevations, the west section is level with the door from the hold-up tank cell, the middle section is 8" below the west section, the trench is east of the middle section, and the along the east wall is a 1'-0" wide

section that is the same height as the door to the filter cell. The cell has a curb that is 6" above the level of the door to the filter cell. A 1'-6" thick shielding wall separates the western section into two areas. Because the average elevation of the western section is only 1/4" below the elevation of the exit door to the filter cell, no credit will be taken for the volume of liquid in this area. Also, because the eastern section is at the same elevation as the bottom of the door to the filter cell, no credit will be taken for the volume of liquid that will be in this area.

Elevations:

Bottom of door to filter cell	-	4882'-2 3/4"
Average elevation of western section	-	4882'-2 ½"
Average elevation of middle section	-	4881'-5 ½"
Top of eastern section	-	4882'-2 3/4"
Bottom of trench	-	4880'-7" (average)

Volume:

Volume above middle section of floor to bottom of door

V_n = 4'-8" x 16'-2" x 0'-9 1/4" = 58.2 ft^3

Volume in and above trench to bottom of door

V_{tt} = 1'-0" x 12'-2" x 1'-7 3/4" = 20.0 ft^3

Total Volume available in the Manipulator Parking and Maintenance Area

V_t = **78.2 ft^3 (585 gal.)**

Filter Cell

Description:

The filter cell is 22'-6" x 13'-2", and is lined with 10 GA stainless steel, and sloped from the north wall to a 1' wide trench along the southern wall of the cell. The cell also has a curb that is 6" above the high point of the floor.

Elevations:

Top of curb	-	4882'-0"
Top of sloped floor	-	4881'-6"
Bottom of sloped floor	-	4881'-3 1/4"
Bottom of trench	-	4880'-8" (average)

Volume

Volume above floor to bottom of curb

V_n = ½ x 22'-6" x 12'-2" x 0'-2 3/4" = 31.4 ft^3

Volume in and above trench to bottom of curb

V_{tt} = 1'-0" x 22'-6" x 0'-10" = 18.8 ft^3

Volume from bottom to top of curb

V_{tt} = 22'-6" x 13'-2" x 0'-6" = 148.1 ft^3

Total Volume available in the Filter Cell

V_t = **198.3 ft^3 (1,483 gal.)**

Lower Valve Cubicle

Description:

The lower valve cubicle is 27'-8" x 9'-9", and is lined with 10 GA stainless steel, and sloped from the north wall to a 1' wide trench along the southern wall of the cell. The cell also has a curb that is 6" above the high point of the floor.

Elevations:

Top of curb	-	4882'-0"
Top of sloped floor	-	4881'-6"
Bottom of sloped floor	-	4881'-4"
Bottom of trench	-	4880'-8" (average)

Volume:

Volume above floor to bottom of curb

V_{I} = ½ x 27'-8" x 8'-9" x 0'-2" = 20.2 ft^3

Volume in and above trench to bottom of curb

V_{II} = 1'-0" x 27'-8" x 0'-10" = 23.1 ft^3

Volume from bottom to top of curb

V_{III} = 27'-8" x 9'-9" x 0'-6" = 134.9 ft^3

Total Volume available in the Lower Valve Cubicle

V_1 = **178.2 ft^3 (1,333 gal.)**

Total volume available for secondary containment for the Decon Hold-up Tank

Vol. = 626.4 ft^3 (4,685 gal.)

Calculation #3

Decon Collection Tank (VES-NCD-129) Secondary Containment

Description:

The Decon Collection Tank is a 304L stainless steel tank, 4'-0" diameter by 5'-6" tall tangent to tangent, with a capacity of 530 gallons (71 ft^3). The secondary containment for this tank is the curbed area in the Decon Collection Tank & Pump Cell on the third level of CPP-659. The cell is divided into two separate areas; the decon collection tank area and the decon pump area. The decon collection tank area is a 10'-0" x 7'-10, and the decon pump area is a 10'-0" x 5'-0". The whole cell is lined with 10 GA stainless steel and sloped from the southern wall to 1' wide trenches along the north wall of both areas. The cell also has a curb that is 6" above the high point of the floor.

Elevations:

Top of curb	-	4883'-6"
Top of sloped floor	-	4883'-0"
Bottom of sloped floor	-	4882'-10"
Bottom of trench	-	4882'-7" (highest)

Volumes:

Decon Collection Tank Area

Volume above floor to bottom of curb

V_{f1} = ½ x 9'-0" x 7'-10" x 0'-2" = 5.9 ft^3

Volume in and above trench to bottom of curb

V_{t1} = 1'-0" x 7'-10" x 0'-5" = 3.3 ft^3

Volume from bottom to top of curb

V_{c1} = 10'-0" x 7'-10" x 0'-6" = 39.2 ft^3

Total Volume available in the Decon Collection Tank Area

V_1 = 48.4 ft^3

Decon Hold-up and Collection Tank Pump Area

Volume above floor to bottom of curb

V_{f2} = ½ x 9'-0" x 5'-0" x 0'-2" = 3.8 ft^3

Volume in and above trench to bottom of curb

V_{t2} = 1'-0" x 5'-0" x 0'-5" = 2.1 ft^3

Volume from bottom to top of curb

V_{c2} = 10'-0" x 5'-0" x 0'-6" = 25.0 ft^3

Total Volume available in the Decon Pump Area

V_2 = 30.9 ft^3

Total volume available for secondary containment for the Decon Collection Tank

Vol = 79.3 ft^3 (593 gal.)

TABLE 1

Cleaning Solutions Used in CPP-659 Waste Treatments # See NOD under D-2a(2)
(Source: ICPP Technical Information Manual)

Treatment Number	Treatment (Solutions)	Hazardous Characteristic	Corrosivity to Stainless Steel
1	Vacuum	n/a	n/a
2	L.P. Steam	n/a	none
3	M.P. Steam	n/a	none
4	H.P. Water	n/a	none
5	Detergent (Turco 4324)	acidic	none
6	Radiacwash	caustic	none
7	Ajax	caustic	n/a
8	Citric Acid	acidic	none
9	Tartaric Acid 0.7M	acidic	none
10	El-Bo-Grez	caustic	none
11	Methyl-chloroform	caustic	n/a
12	Oxalic Acid 5%	acidic	none
13	Oxalic Acid 0.9M	acidic	slight
14	Ultrasonic	n/a	Used with solutions from treatment #s 5, 6, 15, & 23.
15	Turco 4521	acidic	none
16	Turco 4306-D	acidic	none
17	Nitric Acid 1M	acidic	none
18	Nitric Acid 6M	acidic	none
19	Nitric Acid 6M Aluminum Nitrate 0.3M	acidic	none
20	Turco XO-132-W	acidic	high
21	Phosphoric Acid 50%	acidic	low
22	Phosphoric Acid 60% Sulfuric Acid 15% H2CrO4 5%	acidic	low
23	Turco 4512-A or Phosphoric Acid 2M	acidic	low
24	Nitric Acid 2M Potassium Permanganate 0.05M Turco 4521	acidic	none
25	Ammonium Oxalate 0.4M Citric Acid 0.16M Hydrogen Peroxide 0.34M	acidic	none
26	Sulfuric Acid 4M	acidic	moderate
27	Turco Rust Remover	caustic	none
28	Sodium Hydroxide 1.5M EDTA 0.05M	caustic	none
29	Turco 4502 10%	acidic	none
30	Turco 4502 6% Oxalic Acid 0.9M or Turco 4521 Nitric Acid 3M	acidic	low
31	Turco 4502 8% Turco 4521	acidic	none
32	Sodium Hydroxide 10% Tartaric Acid 2%	acidic	none
33	Nitric Acid 1M Sulfuric Acid 6M	acidic	low
34	Hydrofluoric 0.05M Sulfuric Acid 1M	acidic	low
35	Hydrofluoric 0.5M Nitric Acid 3M	acidic	high
36	Hydrofluoric 2M Nitric Acid 8M	acidic	moderate
37	Oxalic Acid 0.4M Hydrofluoric 0.1M Hydrogen Peroxide 0.05M	acidic	moderate
38	Grinding	n/a	n/a

HWMA/RCRA PART B PERMIT

FOR THE IDAHO NATIONAL LABORATORY

Volume 18 – Idaho Nuclear Technology and Engineering Center

APPENDIX 7

Debris Treatment Processes
Holdup and Collection Tanks
CPP-659/-1659 Storage
CPP-666 FDP Cell Container Storage and Slab Tank Storage
Other Miscellaneous Treatment Processes
RMWSF (CPP-1617) Container Storage Area

PE ASSESSMENT OF HFLS TANK DESIGN

Effective Date: April 27, 2009

ETAS

PRJ-WNCO.218
RPT-CERT.218

Certification Document for the Design of the NWCF HEPA FILTER LEACHING SYSTEM MODIFICATIONS PROJECT

Idaho Chemical Processing Plant
Idaho National Engineering Laboratory
Idaho Falls, Idaho

Submitted To:

Westinghouse Idaho Nuclear Company, Inc.

August 16, 1993

ETAS Corporation
8828 North Stemmons Freeway, Suite 413
Dallas, Texas 75247-3726
Tel (214) 630-6610 Fax (214) 630-7494

CERTIFICATION DOCUMENT

FOR THE DESIGN OF THE

NWCF HEPA FILTER LEACHING SYSTEM MODIFICATIONS PROJECT

Idaho Chemical Processing Plant

Idaho National Engineering Laboratory

Idaho Falls, Idaho

Prepared for:

Westinghouse Idaho Nuclear Company, Inc.
Idaho Chemical Processing Plant
Idaho National Engineering Laboratory
Idaho Falls, Idaho

August 16, 1993

ETAS Corporation

DESIGN CERTIFICATION OF NWCF HEPA FILTER LEACHING SYSTEM MODIFICATIONS PROJECT

Idaho Chemical Processing Plant
Idaho National Engineering Laboratory
Idaho Falls, Idaho

The attached report entitled "Certification Document for the Design of the NWCF HEPA Filter Leaching System Modifications Project, Idaho Chemical Processing Plant, Idaho National Engineering Laboratory, Idaho Falls, Idaho", dated August 16, 1993, serves as the basis for this certification which is required under both the Federal regulation 40 CFR 265.192, and the Idaho rules, regulations and standards for hazardous waste.

This certification is limited to the HEPA Filter Leaching System as set forth in the attached document. Further, this certification is limited to the design only, and does not include installation of the system.

We certify under penalty of law that this document and all attachments were prepared under our direction or supervision in accordance with a system designed to assure that qualified personnel properly gather and evaluate the information submitted. Based on our inquiry of the person or persons who manage the system, or those persons directly responsible for gathering the information, the information submitted is, to be the best of our knowledge and belief, true, accurate, and complete. We are aware that there are significant penalties for submitting false information, including the possibility of fine and imprisonment for knowing violations.

Stanley A. Heath — 8-20-93
Stanley A. Heath, Ph.D., Project/QA Manager — Date
ETAS Corporation

T. Y. Richard Lo, P.E., Ph.D., Lead Engineer — Date
ETAS Corporation

James S. Kilburn, P.E. — 8-23-93
James S. Kilburn, P.E., Idaho Professional Engineer — Date
ETAS Corporation

REGISTERED PROFESSIONAL ENGINEER 4504 8-23-93 STATE OF IDAHO JAMES STEWART KILBURN

ETAS

8828 North Stemmons Freeway, Suite 413, Dallas, Texas 75247-3726
Tel (214) 630-6610 Fax (214) 630-7494

TABLE OF CONTENTS

	Page
CERTIFICATION	i
1.0 INTRODUCTION	1
2.0 CERTIFICATION TEAM	2
3.0 DESIGN ASSESSMENT	3
3.1 Description	3
3.1.1 Filter Handling Cell	3
3.1.2 Leaching Vessel	4
3.1.3 Drying Vessel	4
3.1.4 Filter Handling Table	4
3.1.5 Piping	5
3.2 Design	6
3.2.1 Regulatory Requirements	6
3.2.2 Structural Integrity Assessment	7
3.2.3 Secondary Containment Assessment	8
3.2.4 Summary of Assessment	10
4.0 CONDITIONS OF ATTESTATION	11
REFERENCES	
APPENDICES	
Appendix A: Pertinent Environmental Regulations	

1.0 INTRODUCTION

High efficiency particulate air (HEPA) filters used at the Idaho Chemical Processing Plant (ICPP) are stored after use in the cells where they are used. The HEPA Filter Leaching System located in the New Waste Calcining Facility (NWCF) (building CPP-659) at the ICPP was designed to leach transuranic elements, heavy metals, or both from the filters so that they can be disposed of at the Radioactive Waste Management Complex (RWMC) (Reference 1b). The filters are leached several times with heated nitric acid, followed by water washes and hot air drying. This project modifies the existing system to better meet the disposal criteria for the filters. System components include a leaching vessel, a drying vessel, associated piping and instrumentation, and the Filter Handling Cell (FHC) containing the system. Waste liquids from this system drain into vessels in a cell below the FHC.

The certification provided herein by ETAS is limited to the design of vessels and ancillary equipment being installed in the FHC, and the existing FHC stainless steel liner and drain line. The design of these components is assessed to ensure that the applicable standards and requirements of 40 CFR 265.192 and 40 CFR 265.193 are met. No certification of the adequacy of the design to meet the operating criteria is provided by ETAS. As the basis of this certification, this certification document provides signatures and statements of those persons providing the certification as specified in the applicable sections of the 40 CFR 265.192 and 40 CFR 270.11 (d).

2.0 CERTIFICATION TEAM

The ETAS certification team was composed of three qualified professionals. The Lead Engineer, Dr. T. Y. Richard Lo, is a registered professional engineer with 16 years of experience in hazardous waste and environmental engineering. He is responsible for the overall certification and attestation that under the conditions specified in this certification document the new piping system meets the requirements of 40 CFR 265. The Project Manager, Dr. Stanley A. Heath, has had 14 years experience in chemical plant operations and environmental compliance. He audited the pertinent documents to ensure veracity, for accurate and complete documentation, and for field checking that the work was well documented. Mr. James S. Kilburn is a registered Idaho professional engineer with over 40 years of engineering experience, much of it related to tank and piping systems. He reviewed the engineering design, provided other document and construction checking, and provided certification as per 40 CFR 265 and Idaho hazardous waste regulations.

3.0 DESIGN ASSESSMENT

3.1 Description

This project provides for improvements in the filter handling capabilities, more complete leaching of HEPA filter contaminants, improved filter drying, and adequate secondary containment. Operational aspects of the system are discussed in the project feasibility study (Reference 1a). Included in the modifications are a new filter leaching vessel, a new filter drying vessel, modifications to the filter handling table, and associated process, drain, and sample lines. All stainless steel materials used in this system are AISI Type 304L.

3.1.1 Filter Handling Cell

The Filter Handling Cell (FHC) houses the HEPA Filter Leaching System. The FHC is located in the Decontamination Area of the NWCF within the ICPP. The Decontamination Area consists of two adjoining cells, the Decontamination Cell and the Filter Handling Cell. The FHC is 16 by 20 feet by 19 feet high, with walls and ceiling of three foot thick reinforced concrete. The walls and floor are lined with stainless steel. A shielded window provides a view of the interior of the cell from the operating corridor (Reference 3).

Hatches located in the ceiling of the filter cell provide overhead access. Transfer of HEPA filters into the cell is done remotely using a crane to handle the filters and/or filter containers. Once in the cell, handling of the filters is done remotely using a pair of master/slave manipulators on the left and right sides of the window, an electro-mechanical PaR, and an overhead crane in the cell (Reference 3). The cell floor slopes toward a trench located on the east side of the cell and the trench slopes to the south to a drain.

The drain, where it penetrates the floor, is a double-walled pipe. The drain is routed to the decontamination hold-up tank, VES-NCD-123, or the decontamination collection tank, VES-NCD-129, located in a cell below the FHC.

3.1.2 Leaching Vessel

The leaching vessel, VES-NCD-141, is constructed of 3/8" thick 304L stainless steel, and is approximately 2'11" by 2'5"" by 2'2" high, with a bottom sloping to a 1" drain line and a flat lid. Drawings 444397 and 444398 (Reference 2) show construction and design details, including the various nozzles for acid, water, and steam/air supply lines, instrument lines, and sample lines. The capacity is about 120 gallons. The vessel is equipped with a sparger in the bottom to improve leaching efficiency.

3.1.3 Drying Vessel

The drying vessel, VES-NCD-142, is constructed of 3/8" 304L stainless steel, and is approximately 2'11" by 2'5" by 1'4" high with a flat lid. The capacity is about 70 gallons. Drawings 444397 and 444399 (Reference 2) show internal and nozzle details.

3.1.4 Filter Handling Table

The filter handling table is used to hold the filters when they are not in the leaching or drying vessels. The filters are also placed on the table following leaching to allow excess liquid to drain from the filters prior to placement in the drying vessel. The existing table is constructed entirely of stainless steel with an open grating surface (Reference 1a). The table will be modified to include a drip pan of 14 gauge stainless steel under the open grating to provide collection of liquid draining from the filters. The drip pan is sloped to

a drain line at the low point. A splash guard between the leaching vessel and the filter handling table prevents spills during transfer of filters from vessel to table. Details are shown in drawings 444404 and 444405 (Reference 2).

3.1.5 Piping

Hazardous waste piping being installed includes vessel drain lines, sample lines, and an overflow line. Various other lines not carrying hazardous waste include air, nitric acid, steam, and water supply lines and vent lines from the two vessels. All lines in the FHC are constructed of stainless steel.

The drain line from the leaching vessel, 1 1/2" PL-AR-109033, is welded stainless steel, and is routed directly to the floor drain. The overflow line, 1" PL-AR-109010, also ties into the drain line, as does the 1" drain from the filter handling table drip pan. The drain line from the drying vessel, 1/2" PL-AR-155099 is also stainless steel and is routed directly to the floor drain.

Sample lines are 1/4" SST tubing and pipe. As shown in drawings 444390, 444391, 444392, and 444393, these lines are encased in stainless steel pipe when they exit the Filter Handling Cell.

Pipe supports in the FHC are constructed of stainless steel. The new supports, shown in drawing 444390, consist of SST channel welded to the floor, with pipes attached to welded supports by SST "U" bolts.

3.2 Design

The NWCF HEPA Filter Leaching System Modifications were designed by EG&G Idaho, Inc.. ETAS reviewed and evaluated the various design documents: Design criteria (Reference 1b), Feasibility Study (Reference 1a), A-E Performance Specification (Reference 1c), Stress Analysis (Reference 1e), Vessel Specification (Reference 1d), and the RCRA Part B Permit Application relevant to the existing building structure and cell lining (Reference 3). Based on the requirements and the guidelines set forth in 40 CFR 265.192 and 40 CFR 265.193, ETAS assessed the adequacy of the design of the NWCF Filter Leaching Modifications Project.

3.2.1 Regulatory Requirements

The regulatory requirements to ensure adequate design of tanks and components of hazardous waste tank systems are cited in environmental regulations 40 CFR 265.192 and 40 CFR 265.193. In general, the regulations set forth two sets of design requirements: one set pertains to the integrity of the primary systems and the other set pertains to secondary containment and leak detection. ETAS summarizes the pertinent requirements below. The regulations are included as Appendix A.

A) Information that must be considered in the design assessment of system structural integrity and acceptability for storing or treating of hazardous waste:
   a) Consideration of the design standards utilized;
   b) Hazardous characteristics of the waste;
   c) Adequacy of the tank foundations;
   d) Ancillary equipment support.

Because no part of this system is located in the ground, requirements for consideration of corrosion protection, backfill, frost heave, or vehicular traffic are not relevant.

B) Design requirements for secondary containment and detection of potential leaks:

a) Satisfactory materials of construction must be used;

b) Secondary containment must be structurally sound, have an adequate foundation, have at least 100% of the capacity of the largest tank, and prevent infiltration;

c) A leak detection system to detect leaks within 24 hours;

d) A liquid removal system and/or an adequate slope in the system to remove liquid.

2.2 Structural Integrity Assessment

Design Standards: The general design standards are set forth in the design documents (Reference 1). These include various ASME, ANSI, ASTM, ASNT, and AWS standards. These standards ensure that the construction meets the requirements of ASME/ANSI B31.3 and NQA-1 for nuclear facilities as required by the DOE Idaho under DOE-ID Order 4700.1 and DOE-ID Order 5700.6c. ETAS also reviewed the extensive requirements set forth in the A-E Performance Specification (Reference 1c).

Hazardous Waste Characteristics: Compatibility of the materials of construction (304L stainless steel) and the waste solutions (nitric acid) have been considered in the RCRA Part B permit application (Reference 3), and more extensively in "Liner Compatibility Paper," by C.L. Porter of WINCO (Reference 4). These documents and the extensive experience at the ICPP with these materials provide assurance of material compatibility.

Adequacy of Tank Foundations:

The tank foundation design was checked for adequacy by P.J. Matonis (Reference 1e). This stress analysis included the tank supports, the piping and tubing installation, and piping supports. Based on the Natural Phenomena Classification (NPC) 4D, the static analyses were performed with earthquake coefficients developed from UBC-91.

Ancillary Equipment Support: As stated above, these stainless steel supports were included in the stress analysis performed by P.J. Matonis.

Other Considerations: The vessels in this system are designed for 0.5 psig maximum. Both vessels have a substantial flow of air or steam into the vessel at times. Adequate venting of these gases is provided via pipes 2" VG-AR-1009009 and 2" VG-AR-155100. The vessel lids are not secured to the vessels, and thus provide emergency pressure relief.

3.2.3 Secondary Containment Assessment

Materials of Construction: All secondary containment is constructed of 304L stainless steel. As noted above, this material is compatible with the waste solutions in the system.

Secondary Containment: The FHC stainless steel liner has a capacity of approximately 600 gallons, much greater than the capacity of the largest tank (120 gallons). This liner was installed when the facility was constructed. Documents indicate that the liner was installed in accordance to specification SP-453504-20-2, and that the welds were nondestructively examined for leakage by vacuum box and liquid penetrant techniques in 3/79 (Reference 3).

The cell is located in building CPP-659. The foundation for the liner is the floor of the cell. The floors of the building are of reinforced concrete and were designed to handle much larger tanks than are used in the filter leaching system. Groundwater infiltration into the building is prevented by coating below grade concrete surfaces with a waterproof bitumen, asphalt, or coal tar pitch. Construction joints in external walls and floor slabs have waterstops of continuous carbon steel strip with butt welded ends and corners (Reference 3).

The ancillary piping is also contained within the Filter Handling Cell, and is therefore secondarily contained by the cell liner. Where the sample lines exit the cell, they are encased in stainless steel pipes. This double-walled pipe containment extends through the Cell Entry and into the Valve Vault. This secondary containment piping is sloped to drain to the FHC for leak detection and removal. The other two new wall penetrations for the sample piping, from the Valve Vault to the Decon Pump Cell and from the Decon Pump Cell to the Decon Holding Tank Cell, are also sleeved by stainless steel pipe. They drain into these pre-existing cells, which have secondary containment, and leak detection and removal systems (Reference 3).

Leak Detection: Primary leak detection is by surveillance of the system during periods of operation. In addition, a level measuring device monitors the level within the leaching vessel to prevent overfilling. This level device would also detect any unplanned loss of fluid. Any spill within the cell drains to vessels in a lower cell. These vessels also have level measuring devices which would show an unplanned increase in the event of a significant loss in the filter handling cell. These vessels, VES-NCD-123, and VES-NCD-129, are much larger than the filter leaching vessel.

Leak Removal: The floor cell slopes to a trench on the east wall, and the trench slopes south to the drain. This double-walled pipe drains to large tanks in a lower cell. This lower cell also has a stainless steel liner (Reference 3).

3.2.4 Summary of Assessment

Based on the assessment described in 3.2.2, it is ETAS's opinion that the HEPA Filter Leaching System Modifications Project is designed to provide adequate structural integrity and is acceptable for the storing and treating of hazardous waste.. According to Section 3.2.3, ETAS concludes that the design for handling potential leaks in the HEPA Filter Leaching System is satisfactory.

4.0 Conditions of Attestation

ETAS reviewed the documents listed in the References Section which pertain to the design of the NWCF HEPA Filter Leaching System Modifications Project and provided assessments as detailed in Section 3.0. These assessments are the basis for this certification. Excluded from this certification are pre-existing systems not specifically included in this report.

This certification includes only the design of the system, and not the installation. A second certification document will be provided for installation after all installation activities are complete.

ETAS's interpretation of the adequacy of the design is strictly based on environmental regulatory requirements, and this certification should not be construed as a warranty of the HEPA Filter Leaching System.

REFERENCES

1. Design and Specification Documents

a) "Feasibility Study for Modifications to the NWCF Filter Leaching System," by Walter D. Willis, EG&G Idaho, Inc., March 1992.

b) "Design Criteria for the Filter Leaching System Modifications Project," by T.H Waite, April 1992.

c) "A-E Performance Specification, Modifications to the HEPA Filter Leaching System at NWCF," by W.D. Willis, EG&G Idaho, Inc., January 29, 1993.

d) "Specification for HEPA Filter Leaching and Drying Vessels VES-NCD-141 & VES-NDC-142," by W.D. Willis, EG&G Idaho, Inc., January 1993.

e) "Stress Analysis for Modifications to CPP NWCF HEPA Filters Leach System-PJM-64-92," by P.J. Matonis, November 23, 1992.

2. Drawings

Drawing No.	Drawing Description
444385	Cover Sheet, Area Map and Site Map
444386	Drawing Index and Legends
444389	Process and Instrument Diagram
444390	Piping Plan
444391	Sample Lines Plan, Section and Details
444392	Piping Sections and Details
444393	Piping Sections
444394	Piping Details and Views

Drawing No.	Drawing Description
444397	VES-NCD-141 and VES-NCD-0142 Installation
444398	VES-NCD-141 Assembly
444399	VES-NCD-142 Assembly.
444400	VES-NCD-141 Details
444401	Spacer Block Details
444402	VES-NCD-141 Lid Cover
444403	VES-NCD-142 Lid Cover
444404	Filter Handling Table Drip Pan
444405	Filter Handling Table Drip Pan Installation
444406	Work Table Lid Stand and Drain Screen
444407	Valve Station Details
444411	Filter Handling Cell Plan - Installation

3. "RCRA Part B Permit Application for the Idaho National Engineering Laboratory, Volume 10, New Waste Calcining Facility HEPA Filter Leaching System, Section D, Process Information," July 1993.

4. "Liner Compatibility Paper," by C.L. Porter of WINCO.

APPENDIX A

PERTINENT ENVIRONMENTAL REGULATIONS

§ 265.192 Design and installation of new tank systems or components.

(a) Owners or operators of new tank systems or components must ensure that the foundation, structural support, seams, connections, and pressure controls (if applicable) are adequately designed and that the tank system has sufficient structural strength, compatibility with the waste(s) to be stored or treated, and corrosion protection so that it will not collapse, rupture, or fail. The owner or operator must obtain a written assessment, reviewed and certified by an independent, qualified, registered professional engineer, in accordance with Section 270.11(d) attesting that the system has sufficient structural integrity and is acceptable for the storing and treating of hazardous waste. The assessment must include, at a minimum, the following information:

(1) Design standard(s) according to which the tank(s) and ancillary equipment is or will be constructed.

(2) Hazardous characteristics of the waste(s) to be handled.

(3) For new tank systems or components in which the external shell of a metal tank or any external metal component of the tank system is or will be in contact with the soil or with water, a determination by a corrosion expert of:

(i) Factors affecting the potential for corrosion, including but not limited to:

(A) Soil moisture content;

(B) Soil pH;

(C) Soil sulfides level;

(D) Soil resistivity;

(E) Structure to soil potential;

(F) Influence of nearby underground metal structures (e.g., piping);

(G) Stray electric current; and

(H) Existing corrosion-protection measures (e.g., coating, cathodic protection), and

(ii) The type and degree of external corrosion protection that are needed to ensure the integrity of the tank system during the use of the tank system or component, consisting of one or more of the following:

(A) Corrosion-resistant materials of construction such as special alloys, fiberglass reinforced plastic;

(B) Corrosion-resistant coating (such as epoxy, fiberglass) with cathodic protection (e.g., impressed current or sacrificial anodes); and

(C) Electrical isolation devices such as insulating joints and flanges.

[Note: The practices described in the National Association of Corrosion Engineers (NACE) standard, "Recommended Practice (RP-02-85)—Control of External Corrosion on Metallic Buried, Partially Buried, or Submerged Liquid Storage Systems," and the American Petroleum Institute (API) Publication 1632, "Cathodic Protection of Underground Petroleum Storage Tanks and Piping Systems," may be used, where applicable, as guidelines in providing corrosion protection for tank systems.]

(4) For underground tank system components that are likely to be affected by vehicular traffic, a determination of design or operational measures that will protect the tank system against potential damage; and

(5) Design considerations to ensure that:

(i) Tank foundations will maintain the load of a full tank;

(ii) Tank systems will be anchored to prevent flotation or dislodgment where the tank system is placed in a saturated zone, or is located within a seismic fault zone; and

(iii) Tank systems will withstand the effects of frost heave.

(b) The owner or operator of a new tank system must ensure that proper handling procedures are adhered to in order to prevent damage to the system during installation. Prior to covering, enclosing, or placing a new tank system or component in use, an independent, qualified installation inspector or an independent, qualified, registered professional engineer, either of whom is trained and experienced in the proper installation of tank systems, must inspect the system or component for the presence of any of the following items:

(1) Weld breaks;

(2) Punctures;

(3) Scrapes of protective coatings;

(4) Cracks;

(5) Corrosion;

(6) Other structural damage or inadequate construction or installation.

All discrepancies must be remedied before the tank system is covered, enclosed, or placed in use.

(c) New tank systems or components and piping that are placed underground and that are backfilled must be provided with a backfill material that is a noncorrosive, porous, homogeneous substance and that is carefully installed so that the backfill is placed completely around the tank and compacted to ensure that the tank and piping are fully and uniformly supported.

(d) All new tanks and ancillary equipment must be tested for tightness prior to being covered, enclosed or placed in use. If a tank system is found not to be tight, all repairs necessary to remedy the leak(s) in the system must be performed prior to the tank system being covered, enclosed, or placed in use.

(e) Ancillary equipment must be supported and protected against physical damage and excessive stress due to settlement, vibration, expansion or contraction.

[Note: The piping system installation procedures described in American Petroleum Institute (API) Publication 1615 (November 1979), "Installation of Underground Petroleum Storage Systems," or ANSI Standard B31.3, "Petroleum Refinery System," and ANSI Standard B31.4 "Liquid Petroleum Transportation Piping System," may be used, where applicable, as guidelines for proper installation of piping systems.]

(f) The owner or operator must provide the type and degree of corrosion protection necessary, based on the information provided under paragraph (a)(3) of this section, to ensure the integrity of the tank system during use of the tank system. The installation of a corrosion protection system that is field fabricated must be supervised by an independent corrosion expert to ensure proper installation.

(g) The owner or operator must obtain and keep on file at the facility written statements by those persons required to certify the design of the tank system and supervise the installation of the tank system in accordance with the requirements of paragraphs (b) through (f) of this section to attest that the tank system was properly designed and installed and that repairs, pursuant to paragraphs (b) and (d) of this section, were performed. These written statements must also include the certification statement as required in Section 270.11(d) of this chapter.

(Information collection requirements contained in paragraphs (a) and (g) were approved by the Office of Management and Budget under control number 2050–0050.)

[51 FR 25479, July 14, 1986, as amended at 51 FR 29430, August 15, 1986]

§ 265.193 Containment and detection of releases.

(a) In order to prevent the release of hazardous waste or hazardous constituents to the environment, secondary containment that meets the requirements of this section must be provided (except as provided in paragraphs (f) and (g) of this section):

(1) For all new tank systems or components, prior to their being put into service;

(2) For all existing tanks used to store or treat EPA Hazardous Waste Nos. F020, F021, F022, F023, F026, and F027, within two years after January 12, 1987;

(3) For those existing tank systems of known and documentable age, within two years after January 12, 1987, or when the tank systems have reached 15 years of age, whichever comes later;

(4) For those existing tank systems for which the age cannot be documented, within eight years of January 12, 1987; but if the age of the facility is greater than seven years, secondary containment must be provided by the time the facility reaches 15 years of age, or within two years of January 12, 1987, whichever comes later; and

(5) For tank systems that store or treat materials that become hazardous wastes subsequent to January 12, 1987, within the time intervals required in paragraphs (a)(1) through (a)(4) of this section, except that the date that a material becomes a hazardous waste must be used in place of January 12, 1987.

(b) Secondary containment systems must be:

(1) Designed, installed, and operated to prevent any migration of wastes or accumulated liquid out of the system to the soil, ground water, or surface water at any time during the use of the tank system; and

(2) Capable of detecting and collecting releases and accumulated liquids until the collected material is removed.

(c) To meet the requirements of paragraph (b) of this section, secondary containment systems must be at a minimum:

(1) Constructed of or lined with materials that are compatible with the waste(s) to be placed in the tank system and must have sufficient strength and thickness to prevent failure due to pressure gradients (including static head and external hydrological forces), physical contact with the waste to which they are exposed, climatic conditions, the stress of installation, and the stress of daily operation (including stresses from nearby vehicular traffic);

(2) Placed on a foundation or base capable of providing support to the secondary containment system and resistance to pressure gradients above and below the system and capable of preventing failure due to settlement, compression, or uplift;

(3) Provided with a leak-detection system that is designed and operated so that it will detect the failure of either the primary and secondary containment structure or any release of hazardous waste or accumulated liquid in the secondary containment system within 24 hours, or at the earliest practicable time if the existing detection technology or site conditions will not allow detection of a release within 24 hours;

(4) Sloped or otherwise designed or operated to drain and remove liquids resulting from leaks, spills, or precipitation. Spilled or leaked waste and accumulated precipitation must be removed from the secondary containment system within 24 hours, or in as timely a manner as is possible to prevent harm to human health or the environment, if removal of the released waste or accumulated precipitation cannot be accomplished within 24 hours.

[Note: If the collected material is a hazardous waste under Part 261 of this chapter, it is subject to management as a hazardous waste in accordance with all applicable requirements of Parts 262 through 265 of this chapter. If the collected material is discharged through a point source to waters of the United States, it is subject to the requirements of sections 301, 304, and 402 of the Clean Water Act, as amended. If discharged to a Publicly Owned Treatment Works (POTWs), it is subject to the requirements of section 307 of the Clean Water Act, as amended. If the collected material is released to the environment, it may be subject to the reporting requirements of 40 CFR Part 302.)

(d) Secondary containment for tanks must include one or more of the following devices:

(1) A liner (external to the tank);

(2) A vault;

(3) A double-walled tank; or

(4) An equivalent device as approved by the Regional Administrator.

(e) In addition to the requirements of paragraphs (b), (c), and (d) of this section, secondary containment systems must satisfy the following requirements:

(1) External liner systems must be:

(i) Designed or operated to contain 100 percent of the capacity of the largest tank within its boundary;

(ii) Designed or operated to prevent run-on or infiltration of precipitation into the secondary containment system unless the collection system has sufficient excess capacity to contain run-on or infiltration. Such additional capacity must be sufficient excess capacity to contain precipitation from a 25-year, 24-hour rainfall event.

(iii) Free of cracks or gaps; and

(iv) Designed and installed to completely surround the tank and to cover all surrounding earth likely to come into contact with the waste if released from the tank(s) (i.e., capable of preventing lateral as well as vertical migration of the waste).

(2) Vault systems must be:

(i) Designed or operated to contain 100 percent of the capacity of the largest tank within its boundary;

(ii) Designed or operated to prevent run-on or infiltration of precipitation into the secondary containment system unless the collection system has sufficient excess capacity to contain run-on or infiltration. Such additional capacity must be sufficient to contain precipitation from a 25-year, 24-hour rainfall event;

(iii) Constructed with chemical-resistant water stops in place at all joints (if any);

(iv) Provided with an impermeable interior coating or lining that is compatible with the stored waste and that will prevent migration of waste into the concrete;

(v) Provided with a means to protect against the formation of and ignition of vapors within the vault, if the waste being stored or treated:

(A) Meets the definition of ignitable waste under Section 262.21 of this chapter; or

(B) Meets the definition of reactive waste under Section 262.21 of this chapter and may form an ignitable or explosive vapor; and

(vi) Provided with an exterior moisture barrier or be otherwise designed or operated to prevent migration of moisture into the vault if the vault is subject to hydraulic pressure.

(3) Double-walled tanks must be:

(i) Designed as an integral structure (i.e., an inner tank within an outer shell) so that any release from the inner tank is contained by the outer shell;

(ii) Protected, if constructed of metal, from both corrosion of the primary tank interior and the external surface of the outer shell; and

(iii) Provided with a built-in, continuous leak detection system capable of detecting a release within 24 hours or at the earliest practicable time, if the owner or operator can demonstrate to the Regional Administrator, and the Regional Administrator concurs, that the existing leak detection technology or site conditions will not allow detection of a release within 24 hours.

[Note: The provisions outlined in the Steel Tank Institute's (STI) "Standard for Dual Wall Underground Steel Storage Tanks" may be used as guidelines for aspects of the design of underground steel double-walled tanks.]

(f) Ancillary equipment must be provided with full secondary containment (e.g., trench, jacketing, double-walled piping) that meets the requirements of paragraphs (b) and (c) of this section except for:

(1) Aboveground piping (exclusive of flanges, joints, valves, and connections) that are visually inspected for leaks on a daily basis;

(2) Welded flanges, welded joints, and welded connections that are visually inspected for leaks on a daily basis;

(3) Sealless or magnetic coupling pumps and sealless valves, that are visually inspected for leaks on a daily basis; and

(4) Pressurized aboveground piping systems with automatic shut-off devices (e.g., excess flow check valves, flow metering shutdown devices, loss of pressure actuated shut-off devices) that are visually inspected for leaks on a daily basis.

(g) The owner or operator may obtain a variance from the requirements of this Section if the Regional Administrator finds, as a result of a demonstration by the owner or operator, either: that alternative design and operating practices, together with location characteristics, will prevent the migration of hazardous waste or hazardous constituents into the ground water *or* surface water at least as effectively as secondary containment during the active life of the tank system *or* that in the event of a release that does migrate to ground water or surface water, no substantial present or potential hazard will be posed to human health or the environment. New underground tank systems may not, per a demonstration in accordance with paragraph (g)(2) of this section, be exempted from the secondary containment requirements of this section. Application for a variance as allowed in paragraph (g) of this section does not waive compliance with the requirements of this Subpart for new tank systems.

(1) In deciding whether to grant a variance based on a demonstration of equivalent protection of ground water and surface water, the Regional Administrator will consider:

(i) The nature and quantity of the waste;

(ii) The proposed alternate design and operation;

(iii) The hydrogeologic setting of the facility, including the thickness of soils between the tank system and ground water; and

(iv) All other factors that would influence the quality and mobility of the hazardous constituents and the potential for them to migrate to ground water or surface water.

(2) In deciding whether to grant a variance based on a demonstration of no substantial present or potential hazard, the Regional Administrator will consider:

(i) The potential adverse effects on ground water, surface water, and land quality taking into account:

(A) The physical and chemical characteristics of the waste in the tank system, including its potential for migration,

(B) The hydrogeological characteristics of the facility and surrounding land,

(C) The potential for health risks caused by human exposure to waste constituents,

(D) The potential for damage to wildlife, crops, vegetation, and physical structures caused by exposure to waste constituents, and

(E) The persistence and permanence of the potential adverse effects;

(ii) The potential adverse effects of a release on ground-water quality, taking into account:

(A) The quantity and quality of ground water and the direction of ground-water flow,

(B) The proximity and withdrawal rates of water in the area,

(C) The current and future uses of ground water in the area, and

(D) The existing quality of ground water, including other sources of contamination and their cumulative impact on the ground-water quality;

(iii) The potential adverse effects of a release on surface water quality, taking into account:

(A) The quantity and quality of ground water and the direction of ground-water flow,

(B) The patterns of rainfall in the region,

(C) The proximity of the tank system to surface waters,

(D) The current and future uses of surface waters in the area and any water quality standards established for those surface waters, and

(E) The existing quality of surface water, including other sources of contamination and the cumulative impact on surface-water quality; and

(iv) The potential adverse effects of a release on the land surrounding the tank system, taking into account:

(A) The patterns of rainfall in the region, and

(B) The current and future uses of the surrounding land.

(3) The owner or operator of a tank system, for which a variance from secondary containment had been granted in accordance with the requirements of paragraph (g)(1) of this section, at which a release of hazardous waste has occurred from the primary tank system but has not migrated beyond the zone of engineering control (as established in the variance), must:

(i) Comply with the requirements of Section 265.196, except paragraph (d), and

(ii) Decontaminate or remove contaminated soil to the extent necessary to:

(A) Enable the tank system, for which the variance was granted, to resume operation with the capability for the detection of and response to releases at least equivalent to the capability it had prior to the release, and

(B) Prevent the migration of hazardous waste or hazardous constituents to ground water or surface water; and

(iii) If contaminated soil cannot be removed or decontaminated in accordance with paragraph (g)(3)(ii) of this section, comply with the requirements of § 265.197(b).

(4) The owner or operator of a tank system, for which a variance from secondary containment had been granted in accordance with the requirements of paragraph (g)(1) of this section, at which a release of hazardous waste has occurred from the primary tank system and has migrated beyond the zone of engineering control (as established in the variance), must:

(i) Comply with the requirements of Section 265.196(a), (b), (c), and (d); and

(ii) Prevent the migration of hazardous waste or hazardous constituents to ground water or surface water, if possible, and decontaminate or remove contaminated soil. If contaminated soil cannot be decontaminated or removed, or if ground water has been contaminated, the owner or operator must comply with the requirements of Section 265.197(b);

(iii) If repairing, replacing, or reinstalling the tank system, provide secondary containment in accordance with the requirements of paragraphs (a) through (f) of this section or reapply for a variance from secondary containment and meet the requirements for new tank systems in Section 265.192 if the tank system is replaced. The owner or operator must comply with these requirements even if contaminated soil can be decontaminated or removed, and ground water or surface water has not been contaminated.

(h) The following procedures must be followed in order to request a variance from secondary containment:

(1) The Regional Administrator must be notified in writing by the owner or operator that he intends to conduct and submit a demonstration for a variance from secondary containment as allowed in paragraph (g) of this section according to the following schedule:

(i) For existing tank systems, at least 24 months prior to the date that secondary containment must be provided in accordance with paragraph (a) of this section; and

(ii) For new tank systems, at least 30 days prior to entering into a contract for installation of the tank system.

(2) As part of the notification, the owner or operator must also submit to the Regional Administrator a description of the steps necessary to conduct the demonstration and a timetable for completing each of the steps. The demonstration must address each of the factors listed in paragraph (g)(1) or paragraph (g)(2) of this section.

(3) The demonstration for a variance must be completed and submitted to the Regional Administrator within 180 days after notifying the Regional Administrator of intent to conduct the demonstration.

(4) The Regional Administrator will inform the public, through a newspaper notice, of the availability of the demonstration for a variance. The notice shall be placed in a daily or weekly major local newspaper of general circulation and shall provide at least 30 days from the date of the notice for the public to review and comment on the demonstration for a variance. The Regional Administrator also will hold a public hearing, in response to a request or at his own discretion, whenever such a hearing might clarify one or more issues concerning the demonstration for a variance. Public notice of the hearing will be given at least 30 days prior to the date of the hearing and may be given at the same time as notice of the opportunity for the public to review and comment on the demonstration. These two notices may be combined.

HWMA/RCRA PART B PERMIT

FOR THE IDAHO NATIONAL LABORATORY

Volume 18 – Idaho Nuclear Technology and Engineering Center

APPENDIX 8

Debris Treatment Processes
Holdup and Collection Tanks
CPP-659/-1659 Storage
CPP-666 FDP Cell Container Storage and Slab Tank Storage
Other Miscellaneous Treatment Processes
RMWSF (CPP-1617) Container Storage Area

PE ASSESSMENT OF INSTALLATION OF HFLS

Effective Date: April 27, 2009

ETAS

PRJ-LTCO.218
RPT-CERT.218

Certification Document for the NWCF HEPA Filter Leaching System Modifications Project

Idaho Chemical Processing Plant
Idaho National Engineering Laboratory
Idaho Falls, Idaho

Submitted To:

Lockheed Idaho Technologies Company

April 28, 1995

ETAS Corporation
8828 North Stemmons Freeway, Suite 413
Dallas, Texas 75247-3726
Tel (214) 630-6610 Fax (214) 630-7494

CERTIFICATION DOCUMENT

FOR THE

NWCF HEPA FILTER LEACHING SYSTEM MODIFICATIONS PROJECT

Idaho Chemical Processing Plant

Idaho National Engineering Laboratory

Idaho Falls, Idaho

Prepared for:

Lockheed Idaho Technologies Company
Idaho Chemical Processing Plant
Idaho National Engineering Laboratory
Idaho Falls, Idaho

April 28, 1995

ETAS Corporation

CERTIFICATION FOR THE
NWCF HEPA FILTER LEACHING SYSTEM
MODIFICATIONS PROJECT

Idaho Chemical Processing Plant

Idaho National Engineering Laboratory

Idaho Falls, Idaho

The attached report entitled "Certification Document for the NWCF HEPA Filter Leaching System Modifications Project, Idaho Chemical Processing Plant, Idaho National Engineering Laboratory, Idaho Falls, Idaho", dated April 28, 1995, serves as the basis for this certification, which follows the guidance provided under both the Federal regulation 40 CFR 264.192, 264.193, 265.192 and 265.193, and the Idaho rules, regulations and standards for hazardous waste. We attest that the system has sufficient structural integrity and is acceptable for the storing and treating of hazardous waste. The certification provided herein by ETAS Corporation is limited to the work set forth in the certification document.

We certify under penalty of law that this document and all attachments were prepared under our direction or supervision in accordance with a system designed to assure that qualified personnel properly gather and evaluate the information submitted. Based on our inquiry of the person or persons who manage the system, or those persons directly responsible for gathering the information, the information submitted is, to be the best of our knowledge and belief, true, accurate, and complete. We are aware that there are significant penalties for submitting false information, including the possibility of fine and imprisonment for knowing violations.

Stanley A. Heath — 4-28-95

Stanley A. Heath, Ph.D., Project/QA Manager — Date
ETAS Corporation

4-28-95

T. Y. Richard Lo, P.E., Ph.D., Lead Engineer — Date
ETAS Corporation

James S. Kilburn, P.E. — 5/1/95

James S. Kilburn, P.E., Idaho Professional Engineer — Date
ETAS Corporation

REGISTERED PROFESSIONAL ENGINEER 4564 STATE OF IDAHO JAMES STEWART KILBURN

ETAS

TABLE OF CONTENTS

		Page
CERTIFICATION		i
1.0	Introduction	1
2.0	Certification Team	2
3.0	Design Assessment	3
3.1	Description	3
3.1.1	Filter Handling Cell	3
3.1.2	Leaching Vessel	4
3.1.3	Drying Vessel	4
3.1.4	Filter Handling Table	4
3.1.5	Piping	5
3.2	Design	6
3.2.1	Regulatory Requirements	6
3.2.2	Structural Integrity Assessment	7
3.2.3	Secondary Containment Assessment	8
3.2.4	Summary of Assessment	10
3.3	Installation and Inspection	
3.3.1	Regulatory Requirement	
3.3.2	Inspection and Inspection Protocols	
3.3.3	Qualifications of the Contractors	
3.3.4	Independent Inspection	
3.3.5	Inspection Surveillance	
3.3.6	Summary of Assessment	
4.0	Conditions of Attestation	11
REFERENCES		
APPENDICES		
Appendix A:	Pertinent Environmental Regulations	
Appendix B:	Qualification of Contractors	
Appendix C:	Certification Records of Welders and Inspectors	

1.0 INTRODUCTION

High efficiency particulate air (HEPA) filters used at the Idaho Chemical Processing Plant (ICPP) are stored after use in the cells where they are used. The HEPA Filter Leaching System located in the New Waste Calcining Facility (NWCF) (building CPP-659) at the ICPP was designed to leach transuranic elements and/or heavy metals from the filters so that the filters can be disposed of at the Radioactive Waste Management Complex (RWMC) (Reference 1b). The filters are leached several times with heated nitric acid, followed by water washes and hot air drying. This project modifies the existing system to better meet the disposal criteria for the filters and improve system operability. System components include a leaching vessel, a drying vessel, associated piping and instrumentation, and the Filter Handling Cell (FHC) containing the system. Waste liquids from this system drain into vessels in another cell.

The certification provided herein by ETAS is limited to the design of vessels and ancillary equipment being installed in the FHC, and the existing FHC stainless steel liner and drain line. The design of these components is assessed to ensure that the applicable standards and requirements of 40 CFR 264.192 and 265.192 and 40 CFR 264.193 and 265.193 are met. No certification of the adequacy of the design to meet the operating criteria is provided by ETAS. As the basis of this certification, this certification document provides signatures and statements of those persons providing the certification as specified in the applicable sections of the 40 CFR 264.192 and 265.192 and 40 CFR 270.11 (d).

2.0 CERTIFICATION TEAM

The ETAS certification team was composed of three qualified professionals. The Lead Engineer, Dr. T. Y. Richard Lo, is a registered professional engineer with 16 years of experience in hazardous waste and environmental engineering. He is responsible for the overall certification and attestation that under the conditions specified in this certification document the new piping system meets the requirements of 40 CFR 264 and 265. The Project Manager, Dr. Stanley A. Heath, has had 14 years experience in chemical plant operations and environmental compliance. He audited the pertinent documents to ensure veracity, for accurate and complete documentation, and for field checking that the work was well documented. Mr. James S. Kilburn is a registered Idaho professional engineer with over 40 years of engineering experience, much of it related to tank and piping systems. He reviewed the engineering design, provided other document and construction checking, and provided certification as per 40 CFR 264 and 265 and Idaho hazardous waste regulations.

3.0 DESIGN ASSESSMENT

3.1 Description

This project provides for improvements in the filter handling capabilities, more complete leaching of HEPA filter contaminants, improved filter drying, and adequate secondary containment. Operational aspects of the system are discussed in the project feasibility study (Reference 1a). Included in the modifications are a new filter leaching vessel, a new filter drying vessel, modifications to the filter handling table, and associated process, drain, and sample lines. All stainless steel materials used in this system are type 304L.

3.1.1 Filter Handling Cell

The Filter Handling Cell (FHC) houses the HEPA Filter Leaching System. The FHC is located in the Decontamination Area of the NWCF within the ICPP. The Decontamination Area consists of two adjoining cells, the Decontamination Cell and the Filter Handling Cell. The FHC is 16 by 20 feet by 19 feet high, with walls and ceiling of three foot thick reinforced concrete. The walls and floor are lined with stainless steel. A shielded window provides a view of the interior of the cell from the operating corridor (Reference 3).

Hatches located in the ceiling of the filter cell provide overhead access. Transfer of HEPA filters into the cell is done remotely using a crane to handle the filters and/or filter containers. Once in the cell, handling of the filters is done remotely using a pair of master/slave manipulators on the left and right sides of the window, an electro-mechanical PaR, and an overhead crane in the cell (Reference 3). The cell floor slopes toward a trench located on the east side of the cell and the trench slopes to the south to a drain.

The drain, where it penetrates the floor, is a double-walled pipe. The drain is routed to the decontamination hold-up tank, VES-NCD-123, or the decontamination collection tank, VES-NCD-129, located in a cell below the FHC.

3.1.2 Leaching Vessel

The leaching vessel, VES-NCD-141, is constructed of 3/8" thick 304L stainless steel, and is approximately 2'11" by 2'5" by 2'2" high, with a bottom sloping to a 1" drain line and a flat lid. Drawings 444397 and 444398 (Reference 2) show construction and design details, including the various nozzles for acid, water, and steam/air supply lines, instrument lines, and sample lines. The capacity is about 120 gallons. The vessel is equipped with a sparger in the bottom to improve leaching efficiency.

3.1.3 Drying Vessel

The drying vessel, VES-NCD-142, is constructed of 3/8" 304L stainless steel, and is approximately 2'11" by 2'5" by 1'4" high with a flat lid. The capacity is about 70 gallons. Drawings 444397 and 444399 (Reference 2) show internal and nozzle details.

3.1.4 Filter Handling Table

The filter handling table is used to hold the filters when they are not in the leaching or drying vessels. The filters are also placed on the table following leaching to allow excess liquid to drain from the filters prior to placement in the drying vessel. The existing table is constructed entirely of stainless steel with an open grating surface (Reference 1a). The table was modified to include a drip pan of 14 gauge stainless steel under the open grating to provide collection of liquid draining from the filters. The drip pan is sloped to a drain

line at the low point. A splash guard between the leaching vessel and the filter handling table prevents spills during transfer of filters from vessel to table. Details are shown in drawings 444404 and 444405 (Reference 2).

3.1.5 Piping

Hazardous waste piping being installed includes vessel drain lines, sample lines, and an overflow line. Various other lines not carrying hazardous waste include air, nitric acid, steam, and water supply lines and vent lines from the two vessels. All lines in the FHC are constructed of stainless steel.

The drain line from the leaching vessel, 1 1/2" PL-AR-109033, is welded stainless steel, and is routed directly to the floor drain. The overflow line, 1" PL-AR-109010, also ties into the drain line, as does the 1" drain from the filter handling table drip pan. The drain line from the drying vessel, 1/2" PL-AR-155099, is also stainless steel and is routed directly to the floor drain.

Sample lines are 1/4" SST tubing and pipe. As shown in drawings 444390, 444391, 444392, and 444393, these lines are encased in stainless steel pipe where they exit the Filter Handling Cell.

Pipe supports in the FHC are constructed of stainless steel. The new supports, shown in drawing 444390, consist of SST channel welded to the floor, with pipes attached to welded supports by SST "U" bolts.

3.2 Design

The NWCF HEPA Filter Leaching System Modifications were designed by EG&G Idaho, Inc.. ETAS reviewed and evaluated the various design documents: Design criteria (Reference 1b), Feasibility Study (Reference 1a), A-E Performance Specification (Reference 1c), Stress Analysis (Reference 1e), Vessel Specification (Reference 1d), and the RCRA Part B Permit Application relevant to the existing building structure and cell lining (Reference 3). Based on the requirements and the guidelines set forth in 40 CFR 264.192 and 265.192 and 40 CFR 264.193 and 265.193, ETAS assessed the adequacy of the design of the NWCF Filter Leaching Modifications Project.

3.2.1 Regulatory Requirements

The regulatory requirements to ensure adequate design of tanks and components of hazardous waste tank systems are cited in environmental regulations 40 CFR 264.192 and 265.192 and 40 CFR 264.193 and 265.193. In general, the regulations set forth two sets of design requirements: one set pertains to the integrity of the primary systems and the other set pertains to secondary containment and leak detection. ETAS summarizes the pertinent requirements below. The regulations are included as Appendix A.

A) Information that must be considered in the design assessment of system structural integrity and acceptability for storing or treating of hazardous waste:
   a) Consideration of the design standards utilized;
   b) Hazardous characteristics of the waste;
   c) Adequacy of the tank foundations;
   d) Ancillary equipment support.

Because no part of this system is located in the ground, requirements for consideration of corrosion protection, backfill, frost heave, or vehicular traffic are not relevant.

B) Design requirements for secondary containment and detection of potential leaks:

a) Satisfactory materials of construction must be used;

b) Secondary containment must be structurally sound, have an adequate foundation, have at least 100% of the capacity of the largest tank, and prevent infiltration;

c) A leak detection system to detect leaks within 24 hours;

d) A liquid removal system and/or an adequate slope in the system to remove liquid.

3.2.2 Structural Integrity Assessment

Design Standards: The general design standards are set forth in the design documents (Reference 1). These include various ASME, ANSI, ASTM, ASNT, and AWS standards. These standards ensure that the construction meets the requirements of ASME/ANSI B31.3 and NQA-1 for nuclear facilities as required by the DOE Idaho under DOE-ID Order 4700.1 and DOE-ID Order 5700.6c. ETAS also reviewed the extensive requirements set forth in the A-E Performance Specification (Reference 1c).

Hazardous Waste Characteristics: Compatibility of the materials of construction (304L stainless steel) and the waste solutions (nitric acid) have been considered in the RCRA Part B permit application (Reference 3), and more extensively in "Liner Compatibility Paper," by C.L. Porter of WINCO (Reference 4). These documents and the extensive experience at the ICPP with these materials provide assurance of material compatibility.

Adequacy of Tank Foundations:

The tank foundation design was checked for adequacy by P.J. Matonis (Reference 1e). This stress analysis included the tank supports, the piping and tubing installation, and piping supports. Based on the Natural Phenomena Classification (NPC) 4D, the static analyses were performed with earthquake coefficients developed from UBC-91.

Ancillary Equipment Support: As stated above, these stainless steel supports were included in the stress analysis performed by P.J. Matonis.

Other Considerations: The vessels in this system are designed for 0.5 psig maximum. Both vessels have a substantial flow of air or steam into the vessel at times. Adequate venting of these gases is provided via pipes 2" VG-AR-1009009 and 2" VG-AR-155100. The vessel lids are not secured to the vessels, and thus provide emergency pressure relief.

3.2.3 Secondary Containment Assessment

Materials of Construction: All secondary containment is constructed of 304L stainless steel. As noted above, this material is compatible with the waste solutions in the system.

Secondary Containment: The FHC stainless steel liner has a capacity of approximately 600 gallons, much greater than the capacity of the largest tank (120 gallons). This liner was installed when the facility was constructed. Documents indicate that the liner was installed in accordance to specification SP-453504-20-2, and that the welds were nondestructively examined for leakage by vacuum box and liquid penetrant techniques in 3/79 (Reference 3). These welds were also inspected by LITCO in 1995 according to Quality Inspection Plan No. 9425-S-4 (Reference 5b) and found to be sound.

The cell is located in building CPP-659. The foundation for the liner is the floor of the cell. The floors of the building are of reinforced concrete and were designed to handle much larger tanks than are used in the filter leaching system. Groundwater infiltration into the building is prevented by coating below grade concrete surfaces with a waterproof bitumen, asphalt, or coal tar pitch. Construction joints in external walls and floor slabs have waterstops of continuous carbon steel strip with butt welded ends and corners (Reference 3).

The ancillary piping is also contained within the Filter Handling Cell, and is therefore secondarily contained by the cell liner. Where the sample lines exit the cell, they are encased in stainless steel pipes. This double-walled pipe containment extends through the Cell Entry and into the Valve Vault. This secondary containment piping is sloped to drain to the FHC for leak detection and removal. The other two new wall penetrations for the sample piping, from the Valve Vault to the Decon Pump Cell and from the Decon Pump Cell to the Decon Holding Tank Cell, are also sleeved by stainless steel pipe. They drain into these pre-existing cells, which have secondary containment, and leak detection and removal systems (Reference 3).

Leak Detection: Primary leak detection is by surveillance of the system during periods of operation. In addition, a level measuring device monitors the level within the leaching vessel to prevent overfilling. This level device would also detect any unplanned loss of fluid. Any spill within the cell drains to vessels in a lower cell. These vessels also have level measuring devices which would show an unplanned increase in the event of a significant loss in the filter handling cell. These vessels, VES-NCD-123, and VES-NCD-129, are much larger than the filter leaching vessel.

Leak Removal: The floor cell slopes to a trench on the east wall, and the trench slopes south to the drain. This double-walled pipe drains to large tanks in a lower cell. This lower cell also has a stainless steel liner (Reference 3).

3.2.4 Summary of Assessment

Based on the assessment described in 3.2.2, it is ETAS's opinion that the HEPA Filter Leaching System Modifications Project is designed to provide adequate structural integrity and is acceptable for the storing and treating of hazardous waste.. According to Section 3.2.3, ETAS concludes that the design for handling potential leaks in the HEPA Filter Leaching System is satisfactory.

3.3 Installation and Inspection

To ensure proper installation of the system, ETAS:

1) Evaluated the adequacy of the installation and inspection protocols,
2) Reviewed the qualifications of the constructors,
3) Examined installation and inspection records, and
4) Provided surveillance of inspection and installation activities, and witnessed the results of S.O. testing.

Based on the regulatory requirements and guidelines set forth in regulation 40 CFR 264.192 and 265.192, ETAS assessed the adequacy of the installation of the HEPA Filter Leaching System Modification Project.

3.3.1 Regulatory Requirements

The applicable regulatory requirements to ensure proper installation of new tank system components are cited in 40 CFR 264.192(b) – (f) (Appendix A) and 265.192(b) – (f). These regulations require that systems be inspected to detect:

1) weld breaks;
2) punctures;
3) cracks;
4) corrosion;
5) other structural damage or inadequate construction of installation;
6) tightness testing prior to service;
7) protection against physical damage.

Sections of the regulation concerning underground installations do not apply to this project.

3.3.2 Installation and Inspection Protocols

LITCO's installation and inspection protocols are defined in various Quality Engineering Inspection Plans (Reference 5b). These protocols incorporate the quality assurance standards set forth in Quality Program Plan, QPP 332 (Reference 5a), which were developed to meet the National Quality Assurance Standards NQA-1 as required by the

DOE Idaho under DOE-ID Order 4700.1 and DOE-ID Order 5700.6c. Although the U.S. Environmental Protection Agency (USEPA) does not set any specific assurance standards for the installation and inspection of tanks and piping system, it is ETAS's professional judgment that the NQA-1 standard will ensure that the designs discussed in Sections 3.2.2 and 3.2.3 are properly installed and meet the requirements of 40 CFR 264.192 and 265.192.

ETAS assessed LITCO's installation and inspection protocols (Reference 5b), which include vessel construction, installation of piping and vessels, receipt of materials, and welding. These plans were reviewed and approved by LITCO's Project Engineer, Mr. T.H. Waite. Based on this assessment, ETAS concludes that LITCO's installation and inspection protocols are adequate.

3.3.3 Qualifications of the Contractors

Construction management of all installations was provided by Lockheed Idaho Technologies Company, a construction management company approved by the Department of Energy (DOE). Dynamics Incorporated was the general and mechanical contractor, and was responsible for proper completion of all work. Based on the qualifications of this company (Appendix B) and a review of the certification records of the welders (Appendix C), ETAS concludes that the installation was performed by a qualified contractor.

3.3.4 Independent Inspection

To ensure that the installation was implemented in accordance with the installation and inspection protocols set forth in section 3.3.2, LITCO assigned their own Quality Control Engineers and Inspectors overall responsibility for inspection. ETAS's Quality Assurance Manager, Stanley Heath, examined LITCO's inspection records (Reference 5b), LITCO's inspector qualifications (Appendix C), observed various inspection activities (see section 3.3.5), and concluded that the inspections were done in accordance with the inspection plans.

3.3.5 Inspection Surveillance

Dr. Stanley A. Heath, ETAS's Quality Assurance Manager, observed various aspects of the construction and quality assurance inspection of the "NWCF HEPA Filter Leaching System Modifications Project". On January 10, 1995, he reviewed weld records for off-site piping at Dynamics Inc. shop, on-site weld records, and observed construction in progress in the cell. On March 28, 1995, he observed the S.O. test, including the transfer of a filter from the leaching vessel to the filter handling table.

3.3.6 Summary of Assessment

ETAS reviewed the installation and inspection protocols; reviewed the qualifications of contractors, welders and inspectors; examined pertinent inspection records; witnessed various construction and quality assurance activities; reviewed the S.O. test plan; and witnessed the S.O. test. ETAS concludes that the installation and inspection protocols were adequate and were implemented satisfactorily. Based on this assessment, ETAS concludes that the "NWCF HEPA Filter Leaching System Modifications Project" was installed properly and meets the regulatory requirements of 40 CFR 264.192, 264.193, 265.192 and 265.193.

4.0 Conditions of Attestation

ETAS reviewed the documents listed in the References Section which pertain to the design and installation of the NWCF HEPA Filter Leaching System Modifications Project and provided assessments as detailed in Section 3.0. These assessments are the basis for this certification. Excluded from this certification are pre-existing systems not specifically included in this report.

ETAS's interpretation of the adequacy of the design and installation is strictly based on environmental regulatory requirements, and this certification should not be construed as a warranty of the HEPA Filter Leaching System.

REFERENCES

1. Design and Specification Documents

   a) "Feasibility Study for Modifications to the NWCF Filter Leaching System," by Walter D. Willis, EG&G Idaho, Inc., March 1992.

   b) "Design Criteria for the Filter Leaching System Modifications Project," by T.H Waite, April 1992.

   c) "A-E Performance Specification, Modifications to the HEPA Filter Leaching System at NWCF," by W.D. Willis, EG&G Idaho, Inc., January 29, 1993.

   d) "Specification for HEPA Filter Leaching and Drying Vessels VES-NCD-141 & VES-NDC-142," by W.D. Willis, EG&G Idaho, Inc., January 1993.

   e) "Stress Analysis for Modifications to CPP NWCF HEPA Filters Leach System-PJM-64-92," by P.J. Matonis, November 23, 1992.

   f) "HEPA Filter Leach Vessel - Design Calculations", by Richard K. Shogren & Associates, February 22, 1994.

   g) "CID Number 10 - Filter Leach System Mods", by T. Waite, October 18, 1994.

2. Drawings

Drawing No.	Drawing Description
444385	Cover Sheet, Area Map and Site Map
444386	Drawing Index and Legends
444389	Process and Instrument Diagram
444390	Piping Plan
444391	Sample Lines Plan, Section and Details
444392	Piping Sections and Details
444393	Piping Sections
444394	Piping Details and Views

Drawing No.	Drawing Description
444397	VES-NCD-141 and VES-NCD-0142 Installation
444398	VES-NCD-141 Assembly
444399	VES-NCD-142 Assembly.
444400	VES-NCD-141 Details
444401	Spacer Block Details
444402	VES-NCD-141 Lid Cover
444403	VES-NCD-142 Lid Cover
444404	Filter Handling Table Drip Pan
444405	Filter Handling Table Drip Pan Installation
444406	Work Table Lid Stand and Drain Screen
444407	Valve Station Details
444411	Filter Handling Cell Plan - Installation

3. "RCRA Part B Permit Application for the Idaho National Engineering Laboratory, Volume 10, New Waste Calcining Facility HEPA Filter Leaching System, Section D, Process Information, " July 1993.

4. "Liner Compatibility Paper," by C.L. Porter of WINCO.

5. Quality Assurance Documents
   a) "QPP 332, Quality Program Plan for the Spent Filter Handling Project", by W.A. Waterson, March 9, 1992.

b) Quality Inspection Plans

Plan No.	Description
9425-P-1	Piping Inspection - Normal/Basic Service
9425-P-4	Drip Pan
9425-P-5	Piping Inspection - Normal/Basic Service - Off-site
9425-P-6	Vessel Inspection - (141) Piping
9425-P-7	Vessel (141)
9425-S-1	Structural Weld Inspection
9425-S-2	Drip Plan (off-site)
9425-S-3	Structural Weld Inspection (off-site)
9425-S-4	Weld Inspection in the Filter Handling Cell - Floor Liner
9425-R-2	Receipt Inspection - Off-site

c) "SO and Integrated Test Procedure No. NWCF-NCD-SO-FL1, Filter Leaching System in NWCF", by C.A. Sanchez, November 10, 1994.

Appendix A

Pertinent Environmental Regulations

RCRA 77, 117

§ 264.191 Assessment of existing tank system's integrity.

(a) For each existing tank system that does not have secondary containment meeting the requirements of § 264.193, the owner or operator must determine that the tank system is not leaking or is unfit for use. Except as provided in paragraph (c) of this section, the owner or operator must obtain and keep on file at the facility a written assessment reviewed and certified by an independent, qualified registered professional engineer, in accordance with § 270.11(d), that attests to the tank system's integrity by January 12, 1988.

(b) This assessment must determine that the tank system is adequately designed and has sufficient structural strength and compatibility with the waste(s) to be stored or treated, to ensure that it will not collapse, rupture, or fail. At a minimum, this assessment must consider the following:

(1) Design standard(s), if available, according to which the tank and ancillary equipment were constructed;

(2) Hazardous characteristics of the waste(s) that have been and will be handled;

(3) Existing corrosion protection measures;

(4) Documented age of the tank system, if available (otherwise, an estimate of the age); and

(5) Results of a leak test, internal inspection, or other tank integrity examination such that:

(i) For non-enterable underground tanks, the assessment must include a leak test that is capable of taking into account the effects of temperature variations, tank end deflection, vapor pockets, and high water table effects, and

(ii) For other than non-enterable underground tanks and for ancillary equipment, this assessment must include either a leak test, as described above, or other integrity examination, that is certified by an independent, qualified, registered professional engineer in accordance with § 270.11(d), that addresses cracks, leaks, corrosion, and erosion.

[Note: The practices described in the American Petroleum Institute (API) Publication, Guide for Inspection of Refinery Equipment, Chapter XIII, "Atmospheric and Low-Pressure Storage Tanks," 4th edition, 1981, may be used, where applicable, as guidelines in conducting other than a leak test.]

(c) Tank systems that store or treat materials that become hazardous wastes subsequent to July 14, 1986, must conduct this assessment within 12 months after the date that the waste becomes a hazardous waste.

(d) If, as a result of the assessment conducted in accordance with paragraph (a), a tank system is found to be leaking or unfit for use, the owner or operator must comply with the requirements of § 264.196.

[51 FR 25472, July 14, 1986, as amended at 51 FR 29430, Aug. 15, 1986]

RCRA 167

§ 264.192 Design and installation of new tank systems or components.

(a) Owners or operators of new tank systems or components must obtain and submit to the Regional Administrator, at time of submittal of Part B information, a written assessment, reviewed and certified by an independent, qualified registered professional engineer, in accordance with § 270.11(d), attesting that the tank system has sufficient structural integrity and is acceptable for the storing and treating of hazardous waste. The assessment must show that the foundation, structural support, seams, connections, and pressure controls (if applicable) are adequately designed and that the tank system has sufficient structural strength, compatibility with the waste(s) to be stored or treated, and corrosion protection to ensure that it will not collapse, rupture, or fail. This assessment, which will be used by the Regional Administrator to review and approve or disapprove the acceptability of the tank system design, must include, at a minimum, the following information:

(1) Design standard(s) according to which tank(s) and/or the ancillary equipment are constructed;

(2) Hazardous characteristics of the waste(s) to be handled;

(3) For new tank systems or components in which the external shell of a metal tank or any external metal component of the tank system will be in contact with the soil or with water, a determination by a corrosion expert of:

(i) Factors affecting the potential for corrosion, including but not limited to:

(A) Soil moisture content;

(B) Soil pH;

(C) Soil sulfides level;

(D) Soil resistivity;

(E) Structure to soil potential;

©1994 by Elsevier Science Inc

(F) Influence of nearby underground metal structures (e.g., piping);

(G) Existence of stray electric current;

(H) Existing corrosion-protection measures (e.g., coating, cathodic protection), and

(ii) The type and degree of external corrosion protection that are needed to ensure the integrity of the tank system during the use of the tank system or component, consisting of one or more of the following:

(A) Corrosion-resistant materials of construction such as special alloys, fiberglass reinforced plastic, etc.;

(B) Corrosion-resistant coating (such as epoxy, fiberglass, etc.) with cathodic protection (e.g., impressed current or sacrificial anodes); and

(C) Electrical isolation devices such as insulating joints, flanges, etc.

[Note: The practices described in the National Association of Corrosion Engineers (NACE) standard, "Recommended Practice (RP-02-85)—Control of External Corrosion on Metallic Buried, Partially Buried, or Submerged Liquid Storage Systems," and the American Petroleum Institute (API) Publication 1632, "Cathodic Protection of Underground Petroleum Storage Tanks and Piping Systems," may be used, where applicable, as guidelines in providing corrosion protection for tank systems.]

(4) For underground tank system components that are likely to be adversely affected by vehicular traffic, a determination of design or operational measures that will protect the tank system against potential damage; and

(5) Design considerations to ensure that:

(i) Tank foundations will maintain the load of a full tank;

(ii) Tank systems will be anchored to prevent flotation or dislodgment where the tank system is placed in a saturated zone, or is located within a seismic fault zone subject to the standards of § 264.18(a); and

(iii) Tank systems will withstand the effects of frost heave.

(b) The owner or operator of a new tank system must ensure that proper handling procedures are adhered to in order to prevent damage to the system during installation. Prior to covering, enclosing, or placing a new tank system or component in use, an independent, qualified installation inspector or an independent, qualified, registered professional engineer, either of whom is ined and experienced in the proper installation of tank systems or components, must inspect the system for the presence of of the following items:

(1) Weld breaks;

(2) Punctures;

(3) Scrapes of protective coatings;

(4) Cracks;

(5) Corrosion;

(6) Other structural damage or inadequate construction/installation.

All discrepancies must be remedied before the tank system is covered, enclosed, or placed in use.

(c) New tank systems or components that are placed underground and that are backfilled must be provided with a backfill material that is a noncorrosive, porous, homogeneous substance and that is installed so that the backfill is placed completely around the tank and compacted to ensure that the tank and piping are fully and uniformly supported.

(d) All new tanks and ancillary equipment must be tested for tightness prior to being covered, enclosed, or placed in use. If a tank system is found not to be tight, all repairs necessary to remedy the leak(s) in the system must be performed prior to the tank system being covered, enclosed, or placed into use.

(e) Ancillary equipment must be supported and protected against physical damage and excessive stress due to settlement, vibration, expansion, or contraction.

[Note: The piping system installation procedures described in American Petroleum Institute (API) Publication 1615 (November 1979), "Installation of Underground Petroleum Storage Systems," or ANSI Standard B31.3, "Petroleum Refinery Piping," and ANSI Standard B31.4 "Liquid Petroleum Transportation Piping System," may be used, where applicable, as guidelines for proper installation of piping systems.]

(f) The owner or operator must provide the type and degree of corrosion protection recommended by an independent corrosion expert, based on the information provided under paragraph (a)(3) of this section, or other corrosion protection if the Regional ministrator believes other corrosion protection is necessary to ensure the integrity of the tank system during use of the tank 'm. The installation of a corrosion protection system that is field fabricated must be supervised by an independent corrosion rt to ensure proper installation.

©1994 by Elsevier Science Inc.

RCRA 171 (g) The owner or operator must obtain and keep on file at the facility written statements by those persons required to certify the design of the tank system and supervise the installation of the tank system in accordance with the requirements of paragraphs (b) through (f) of this section, that attest that the tank system was properly designed and installed and that repairs, pursuant to paragraphs (b) and (d) of this section, were performed. These written statements must also include the certification statement as required in § 270.11(d) of this Chapter.

[51 FR 25472, July 14, 1986, as amended at 51 FR 29430, Aug. 15, 1986]

RCRA 58, 74, 117

§ 264.193 Containment and detection of releases.

RCRA 84, 167 (a) In order to prevent the release of hazardous waste or hazardous constituents to the environment, secondary containment that meets the requirements of this section must be provided (except as provided in paragraphs (f) and (g) of this section):

(1) For all new tank systems or components, prior to their being put into service;

(2) For all existing tank systems used to store or treat EPA Hazardous Waste Nos. F020, F021, F022, F023, F026, and F027, within two years after January 12, 1987;

RCRA 168 (3) For those existing tank systems of known and documented age, within two years after January 12, 1987 or when the tank system has reached 15 years of age, whichever comes later;

(4) For those existing tank systems for which the age cannot be documented, within eight years of January 12, 1987; but if the age of the facility is greater than seven years, secondary containment must be provided by the time the facility reaches 15 years of age, or within two years of January 12, 1987, whichever comes later; and

(5) For tank systems that store or treat materials that become hazardous wastes subsequent to January 12, 1987, within the time intervals required in paragraphs (a)(1) through (a)(4) of this section, except that the date that a material becomes a hazardous waste must be used in place of January 12, 1987.

RCRA 229 (b) Secondary containment systems must be:

(1) Designed, installed, and operated to prevent any migration of wastes or accumulated liquid out of the system to the soil, ground water, or surface water at any time during the use of the tank system; and

(2) Capable of detecting and collecting releases and accumulated liquids until the collected material is removed.

(c) To meet the requirements of paragraph (b) of this section, secondary containment systems must be at a minimum:

(1) Constructed of or lined with materials that are compatible with the waste(s) to be placed in the tank system and must have sufficient strength and thickness to prevent failure owing to pressure gradients (including static head and external hydrological forces), physical contact with the waste to which it is exposed, climatic conditions, and the stress of daily operation (including stresses from nearby vehicular traffic).

(2) Placed on a foundation or base capable of providing support to the secondary containment system, resistance to pressure gradients above and below the system, and capable of preventing failure due to settlement, compression, or uplift;

RCRA 58, 166 (3) Provided with a leak-detection system that is designed and operated so that it will detect the failure of either the primary or secondary containment structure or the presence of any release of hazardous waste or accumulated liquid in the secondary containment system within 24 hours, or at the earliest practicable time if the owner or operator can demonstrate to the Regional Administrator that existing detection technologies or site conditions will not allow detection of a release within 24 hours; and

(4) Sloped or otherwise designed or operated to drain and remove liquids resulting from leaks, spills, or precipitation. Spilled or leaked waste and accumulated precipitation must be removed from the secondary containment system within 24 hours, or in as timely a manner as is possible to prevent harm to human health and the environment, if the owner or operator can demonstrate to the Regional Administrator that removal of the released waste or accumulated precipitation cannot be accomplished within 24 hours.

[Note: If the collected material is a hazardous waste under Part 261 of this chapter, it is subject to management as a hazardous waste in accordance with all applicable requirements of Parts 262 through 265 of this chapter. If the collected material is discharged through a point source to waters of the United States, it is subject to the requirements of sections 301, 304, and 402 of the Clean Water Act, as amended. If discharged to a Publicly Owned Treatment Works (POTW), it is subject to the requirements of section 307 of the Clean Water Act, as amended. If the collected material is released to the environment, it may be subject to the reporting requirements of 40 *CFR* Part 302.]

(d) Secondary containment for tanks must include one or more of the following devices:

©1994 by Elsevier Science Inc.

(2) A liner (external to the tank);

(3) A vault;

(3) A double-walled tank; or

(4) An equivalent device as approved by the Regional Administrator.

(e) In addition to the requirements of paragraphs (b), (c), and (d) of this section, secondary containment systems must satisfy the following requirements: RCRA 229

(1) External liner systems must be:

(i) Designed or operated to contain 100 percent of the capacity of the largest tank within its boundary;

(ii) Designed or operated to prevent run-on or infiltration of precipitation into the secondary containment system unless the collection system has sufficient excess capacity to contain run-on or infiltration. Such additional capacity must be sufficient to contain precipitation from a 25-year, 24-hour rainfall event.

(iii) Free of cracks or gaps; and

(iv) Designed and installed to surround the tank completely and to cover all surrounding earth likely to come into contact with the waste if the waste is released from the tank(s) (i.e., capable of preventing lateral as well as vertical migration of the waste).

(2) Vault systems must be: RCRA 88, 172

(i) Designed or operated to contain 100 percent of the capacity of the largest tank within its boundary;

(ii) Designed or operated to prevent run-on or infiltration of precipitation into the secondary containment system unless the collection system has sufficient excess capacity to contain run-on or infiltration. Such additional capacity must be sufficient to contain precipitation from a 25-year, 24-hour rainfall event;

(iii) Constructed with chemical-resistant water stops in place at all joints (if any);

(iv) Provided with an impermeable interior coating or lining that is compatible with the stored waste and that will prevent migration of waste into the concrete;

(v) Provided with a means to protect against the formation of and ignition of vapors within the vault, if the waste being stored or treated:

(A) Meets the definition of ignitable waste under § 262.21 of this chapter; or

(B) Meets the definition of reactive waste under § 262.21 of this chapter, and may form an ignitable or explosive vapor.

(vi) Provided with an exterior moisture barrier or be otherwise designed or operated to prevent migration of moisture into the vault if the vault is subject to hydraulic pressure.

(3) Double-walled tanks must be:

(i) Designed as an integral structure (i.e., an inner tank completely enveloped within an outer shell) so that any release from the inner tank is contained by the outer shell. RCRA 155

(ii) Protected, if constructed of metal, from both corrosion of the primary tank interior and of the external surface of the outer shell; and

(iii) Provided with a built-in continuous leak detection system capable of detecting a release within 24 hours, or at the earliest practicable time, if the owner or operator can demonstrate to the Regional Administrator, and the Regional Administrator concludes, that the existing detection technology or site conditions would not allow detection of a release within 24 hours. RCRA 58

[Note: The provisions outlined in the Steel Tank Institute's (STI) "Standard for Dual Wall Underground Steel Storage Tanks" may be used as guidelines for aspects of the design of underground steel double-walled tanks.]

(f) Ancillary equipment must be provided with secondary containment (e.g., trench, jacketing, double-walled piping) that meets the requirements of paragraphs (b) and (c) of this section except for:

(1) Aboveground piping (exclusive of flanges, joints, valves, and other connections) that are visually inspected for leaks on a daily basis;

(2) Welded flanges, welded joints, and welded connections, that are visually inspected for leaks on a daily basis;

(3) Sealless or magnetic coupling pumps and sealless valves, that are visually inspected for leaks on a daily basis; and

©1994 by Elsevier Science Inc.

(4) Pressurized aboveground piping systems with automatic shut-off devices (e.g., excess flow check valves, flow metering shutdown devices, loss of pressure actuated shut-off devices) that are visually inspected for leaks on a daily basis.

(g) The owner or operator may obtain a variance from the requirements of this section if the Regional Administrator finds, as a result of a demonstration by the owner or operator that alternative design and operating practices, together with location characteristics, will prevent the migration of any hazardous waste or hazardous constituents into the ground water; *or* surface water at least as effectively as secondary containment during the active life of the tank system or that in the event of a release that does migrate to ground water or surface water, no substantial present or potential hazard will be posed to human health or the environment. New underground tank systems may not, per a demonstration in accordance with paragraph (g)(2) of this section, be exempted from the secondary containment requirements of this section.

(1) In deciding whether to grant a variance based on a demonstration of equivalent protection of ground water and surface water, the Regional Administrator will consider:

(i) The nature and quantity of the wastes;

(ii) The proposed alternate design and operation;

(iii) The hydrogeologic setting of the facility, including the thickness of soils present between the tank system and ground water, and

(iv) All other factors that would influence the quality and mobility of the hazardous constituents and the potential for them to migrate to ground water or surface water.

(2) In deciding whether to grant a variance based on a demonstration of no substantial present or potential hazard, the Regional Administrator will consider:

(i) The potential adverse effects on ground water, surface water, and land quality taking into account:

(A) The physical and chemical characteristics of the waste in the tank system, including its potential for migration,

(B) The hydrogeological characteristics of the facility and surrounding land,

(C) The potential for health risks caused by human exposure to waste constituents,

(D) The potential for damage to wildlife, crops, vegetation, and physical structures caused by exposure to waste constituents, and

(E) The persistence and permanence of the potential adverse effects;

(ii) The potential adverse effects of a release on ground-water quality, taking into account:

(A) The quantity and quality of ground water and the direction of ground-water flow,

(B) The proximity and withdrawal rates of ground-water users,

(C) The current and future uses of ground water in the area, and

(D) The existing quality of ground water, including other sources of contamination and their cumulative impact on the ground-water quality;

(iii) The potential adverse effects of a release on surface water quality, taking into account:

(A) The quantity and quality of ground water and the direction of ground-water flow,

(B) The patterns of rainfall in the region,

(C) The proximity of the tank system to surface waters,

(D) The current and future uses of surface waters in the area and any water quality standards established for those surface waters, and

(E) The existing quality of surface water, including other sources of contamination and the cumulative impact on surface-water quality; and

(iv) The potential adverse effects of a release on the land surrounding the tank system, taking into account:

(A) The patterns of rainfall in the region, and

(B) The current and future uses of the surrounding land.

(3) The owner or operator of a tank system, for which a variance from secondary containment had been granted in accordance with the requirements of paragraph (g)(1) of this section, at which a release of hazardous waste has occurred from the primary tank system but has not migrated beyond the zone of engineering control (as established in the variance), must

(i) Comply with the requirements of § 264.196, except paragraph (d), and

 ©1994 by Elsevier Science Inc

(ii) Decontaminate or remove contaminated soil to the extent necessary to:

(A) Enable the tank system for which the variance was granted to resume operation with the capability for the detection of releases at least equivalent to the capability it had prior to the release; and

(B) Prevent the migration of hazardous waste or hazardous constituents to ground water or surface water; and

(iii) If contaminated soil cannot be removed or decontaminated in accordance with paragraph (g)(3)(ii) of this section, comply with the requirement of § 264.197(b).

(4) The owner or operator of a tank system, for which a variance from secondary containment had been granted in accordance with the requirements of paragraph (g)(1) of this section, at which a release of hazardous waste has occurred from the primary tank system and has migrated beyond the zone of engineering control (as established in the variance), must:

(i) Comply with the requirements of § 264.196(a), (b), (c), and (d); and

(ii) Prevent the migration of hazardous waste or hazardous constituents to ground water or surface water, if possible, and decontaminate or remove contaminated soil. If contaminated soil cannot be decontaminated or removed or if ground water has been contaminated, the owner or operator must comply with the requirements of § 264.197(b); and

(iii) If repairing, replacing, or reinstalling the tank system, provide secondary containment in accordance with the requirements of paragraphs (a) through (f) of this section or reapply for a variance from secondary containment and meet the requirements for new tank systems in § 264.192 if the tank system is replaced. The owner or operator must comply with these requirements even if contaminated soil can be decontaminated or removed and ground water or surface water has not been contaminated.

(h) The following procedures must be followed in order to request a variance from secondary containment:

(1) The Regional Administrator must be notified in writing by the owner or operator that he intends to conduct and submit a demonstration for a variance from secondary containment as allowed in paragraph (g) according to the following schedule:

(i) For existing tank systems, at least 24 months prior to the date that secondary containment must be provided in accordance with paragraph (a) of this section.

(ii) For new tank systems, at least 30 days prior to entering into a contract for installation.

(2) As part of the notification, the owner or operator must also submit to the Regional Administrator a description of the steps necessary to conduct the demonstration and a timetable for completing each of the steps. The demonstration must address each of the factors listed in paragraph (g)(1) or paragraph (g)(2) of this section;

(3) The demonstration for a variance must be completed within 180 days after notifying the Regional Administrator of an intent to conduct the demonstration; and

(4) If a variance is granted under this paragraph, the Regional Administrator will require the permittee to construct and operate the tank system in the manner that was demonstrated to meet the requirements for the variance.

(i) All tank systems, until such time as secondary containment that meets the requirements of this section is provided, must comply with the following: RCRA 77

(1) For non-enterable underground tanks, a leak test that meets the requirements of § 264.191(b)(5) or other tank integrity method, as approved or required by the Regional Administrator, must be conducted at least annually.

(2) For other than non-enterable underground tanks, the owner or operator must either conduct a leak test as in paragraph (i)(1) of this section or develop a schedule and procedure for an assessment of the overall condition of the tank system by an independent, qualified registered professional engineer. The schedule and procedure must be adequate to detect obvious cracks, leaks, and corrosion or erosion that may lead to cracks and leaks. The owner or operator must remove the stored waste from the tank, if necessary, to allow the condition of all internal tank surfaces to be assessed. The frequency of these assessments must be based on the material of construction of the tank and its ancillary equipment, the age of the system, the type of corrosion or erosion protection used, the rate of corrosion or erosion observed during the previous inspection, and the characteristics of the waste being stored or treated.

(3) For ancillary equipment, a leak test or other integrity assessment as approved by the Regional Administrator must be conducted at least annually.

[Note: The practices described in the American Petroleum Institute (API) Publication Guide for Inspection of Refinery Equipment, Chapter XIII, "Atmospheric and Low-Pressure Storage Tanks," 4th edition, 1981, may be used, where applicable, as guidelines for assessing the overall condition of the tank system.]

©1994 by Elsevier Science Inc.

(4) The owner or operator must maintain on file at the facility a record of the results of the assessments conducted in accordance with paragraphs (i)(1) through (i)(3) of this section.

(5) If a tank system or component is found to be leaking or unfit for use as a result of the leak test or assessment in paragraphs (i)(1) through (i)(3) of this section, the owner or operator must comply with the requirements of § 264.196.

[51 FR 25472, July 14, 1986, as amended at 51 FR 29430, Aug. 15, 1986; 53 FR 34086, Sept. 2, 1988]

§ 264.194 General operating requirements.

(a) Hazardous wastes or treatment reagents must not be placed in a tank system if they could cause the tank, its ancillary equipment, or the containment system to rupture, leak, corrode, or otherwise fail.

(b) The owner or operator must use appropriate controls and practices to prevent spills and overflows from tank or containment systems. These include at a minimum:

(1) Spill prevention controls (e.g., check valves, dry disconnect couplings);

(2) Overfill prevention controls (e.g., level sensing devices, high level alarms, automatic feed cutoff, or bypass to a standby tank); and

(3) Maintenance of sufficient freeboard in uncovered tanks to prevent overtopping by wave or wind action or by precipitation.

(c) The owner or operator must comply with the requirements of § 264.196 if a leak or spill occurs in the tank system.

RCRA 74

§ 264.195 Inspections.

(a) The owner or operator must develop and follow a schedule and procedure for inspecting overfill controls.

(b) The owner or operator must inspect at least once each operating day:

(1) Aboveground portions of the tank system, if any, to detect corrosion or releases of waste;

(2) Data gathered from monitoring and leak detection equipment (e.g., pressure or temperature gauges, monitoring wells) to ensure that the tank system is being operated according to its design; and

(3) The construction materials and the area immediately surrounding the externally accessible portion of the tank system, including the secondary containment system (e.g., dikes) to detect erosion or signs of releases of hazardous waste (e.g., wet spots, dead vegetation).

[Note: Section 264.15(c) requires the owner or operator to remedy any deterioration or malfunction he finds. Section 264.196 requires the owner or operator to notify the Regional Administrator within 24 hours of confirming a leak. Also, 40 *CFR* Part 302 may require the owner or operator to notify the National Response Center of a release.]

(c) The owner or operator must inspect cathodic protection systems, if present, according to, at a minimum, the following schedule to ensure that they are functioning properly:

(1) The proper operation of the cathodic protection system must be confirmed within six months after initial installation and annually thereafter; and

(2) All sources of impressed current must be inspected and/or tested, as appropriate, at least bimonthly (i.e., every other month).

[Note: The practices described in the National Association of Corrosion Engineers (NACE) standard, "Recommended Practice (RP-02-85)—Control of External Corrosion on Metallic Buried, Partially Buried, or Submerged Liquid Storage Systems," and the American Petroleum Institute (API) Publication 1632, "Cathodic Protection of Underground Petroleum Storage Tanks and Piping Systems," may be used where applicable, as guidelines in maintaining and inspecting cathodic protection systems.]

(d) The owner or operator must document in the operating record of the facility an inspection of those items in paragraphs (a) through (c) of this section.

©1994 by Elsevier Science Inc.

RCRA

§ 265.192 Design and installation of new tank systems or components.

(a) Owners or operators of new tank systems or components must ensure that the foundation, structural support, seams, connections, and pressure controls (if applicable) are adequately designed and that the tank system has sufficient structural strength, compatibility with the waste(s) to be stored or treated, and corrosion protection so that it will not collapse, rupture, or fail. The owner or operator must obtain a written assessment, reviewed and certified by an independent, qualified, registered professional engineer, in accordance with § 270.11(d) attesting that the system has sufficient structural integrity and is acceptable for the storing and treating of hazardous waste. The assessment must include, at a minimum, the following information:

(1) Design standard(s) according to which the tank(s) and ancillary equipment is or will be constructed.

(2) Hazardous characteristics of the waste(s) to be handled.

(3) For new tank systems or components in which the external shell of a metal tank or any external metal component of the tank system is or will be in contact with the soil or with water, a determination by a corrosion expert of:

(i) Factors affecting the potential for corrosion, including but not limited to:

(A) Soil moisture content;

(B) Soil pH;

(C) Soil sulfides level;

(D) Soil resistivity;

(E) Structure to soil potential;

(F) Influence of nearby underground metal structures (e.g., piping);

(G) Stray electric current; and

(H) Existing corrosion-protection measures (e.g., coating, cathodic protection), and

(ii) The type and degree of external corrosion protection that are needed to ensure the integrity of the tank system during the use of the tank system or component, consisting of one or more of the following:

(A) Corrosion-resistant materials of construction such as special alloys, fiberglass reinforced plastic;

(B) Corrosion-resistant coating (such as epoxy, fiberglass) with cathodic protection (e.g., impressed current or sacrificial anodes); and

(C) Electrical isolation devices such as insulating joints and flanges.

[Note: The practices described in the National Association of Corrosion Engineers (NACE) standard, "Recommended Practice (RP-02-85)—Control of External Corrosion on Metallic Buried, Partially Buried, or Submerged Liquid Storage Systems," and the American Petroleum Institute (API) Publication 1632, "Cathodic Protection of Underground Petroleum Storage Tanks and Piping Systems," may be used, where applicable, as guidelines in providing corrosion protection for tank systems.]

(4) For underground tank system components that are likely to be affected by vehicular traffic, a determination of design or operational measures that will protect the tank system against potential damage; and

(5) Design considerations to ensure that:

(i) Tank foundations will maintain the load of a full tank;

(ii) Tank systems will be anchored to prevent flotation or dislodgment where the tank system is placed in a saturated zone, or is located within a seismic fault zone; and

(iii) Tank systems will withstand the effects of frost heave.

(b) The owner or operator of a new tank system must ensure that proper handling procedures are adhered to in order to prevent damage to the system during installation. Prior to covering, enclosing, or placing a new tank system or component in use, an independent, qualified installation inspector or an independent, qualified, registered professional engineer, either of whom is trained and experienced in the proper installation of tank systems, must inspect the system or component for the presence of any of the following items:

(1) Weld breaks;

(2) Punctures;

(3) Scrapes of protective coatings;

(4) Cracks;

©1994 by Elsevier Science Inc.

(5) Corrosion;

(6) Other structural damage or inadequate construction or installation.

Discrepancies must be remedied before the tank system is covered, enclosed, or placed in use.

New tank systems or components and piping that are placed underground and that are backfilled must be provided with a backfill material that is a noncorrosive, porous, homogeneous substance and that is carefully installed so that the backfill is placed completely around the tank and compacted to ensure that the tank and piping are fully and uniformly supported.

(d) All new tanks and ancillary equipment must be tested for tightness prior to being covered, enclosed or placed in use. If a tank system is found not to be tight, all repairs necessary to remedy the leak(s) in the system must be performed prior to the tank system being covered, enclosed, or placed in use.

(e) Ancillary equipment must be supported and protected against physical damage and excessive stress due to settlement, vibration, expansion or contraction.

[Note: The piping system installation procedures described in American Petroleum Institute (API) Publication 1615 (November 1979), "Installation of Underground Petroleum Storage Systems," or ANSI Standard B31.3, "Petroleum Refinery System," and ANSI Standard B31.4 "Liquid Petroleum Transportation Piping System," may be used, where applicable, as guidelines for proper installation of piping systems.]

(f) The owner or operator must provide the type and degree of corrosion protection necessary, based on the information provided under paragraph (a)(3) of this section, to ensure the integrity of the tank system during use of the tank system. The installation of a corrosion protection system that is field fabricated must be supervised by an independent corrosion expert to ensure proper installation.

(g) The owner or operator must obtain and keep on file at the facility written statements by those persons required to certify the design of the tank system and supervise the installation of the tank system in accordance with the requirements of paragraphs (b) through (f) of this section to attest that the tank system was properly designed and installed and that repairs, pursuant to paragraphs (b) and (d) of this section, were performed. These written statements must also include the certification statement as required in § 270.11(d) of this chapter. RCRA 171

[51 FR 25479, July 14, 1986, as amended at 51 FR 29430, August 15, 1986]

265.193 Containment and detection of releases. RCRA 74, 116, 117

In order to prevent the release of hazardous waste or hazardous constituents to the environment, secondary containment that meets the requirements of this section must be provided (except as provided in paragraphs (f) and (g) of this section): RCRA 84, 167, 176

(1) For all new tank systems or components, prior to their being put into service;

(2) For all existing tanks used to store or treat EPA Hazardous Waste Nos. F020, F021, F022, F023, F026, and F027, within two years after January 12, 1987;

(3) For those existing tank systems of known and documentable age, within two years after January 12, 1987, or when the tank systems have reached 15 years of age, whichever comes later; RCRA 168

(4) For those existing tank systems for which the age cannot be documented, within eight years of January 12, 1987; but if the age of the facility is greater than seven years, secondary containment must be provided by the time the facility reaches 15 years of age, or within two years of January 12, 1987, whichever comes later; and

(5) For tank systems that store or treat materials that become hazardous wastes subsequent to January 12, 1987, within the time intervals required in paragraphs (a)(1) through (a)(4) of this section, except that the date that a material becomes a hazardous waste must be used in place of January 12, 1987.

(b) Secondary containment systems must be: RCRA 229

(1) Designed, installed, and operated to prevent any migration of wastes or accumulated liquid out of the system to the soil, ground water, or surface water at any time during the use of the tank system; and

(2) Capable of detecting and collecting releases and accumulated liquids until the collected material is removed.

(c) To meet the requirements of paragraph (b) of this section, secondary containment systems must be at a minimum:

(1) Constructed of or lined with materials that are compatible with the waste(s) to be placed in the tank system and must have sufficient strength and thickness to prevent failure due to pressure gradients (including static head and external hydrological forces), physical contact with the waste to which they are exposed, climatic conditions, the stress of installation, and the stress of daily operation (including stresses from nearby vehicular traffic);

©1994 by Elsevier Science Inc.

(2) Placed on a foundation or base capable of providing support to the secondary containment system and resistance to pressure gradients above and below the system and capable of preventing failure due to settlement, compression, or uplift;

RCRA 166

(3) Provided with a leak-detection system that is designed and operated so that it will detect the failure of either the primary and secondary containment structure or any release of hazardous waste or accumulated liquid in the secondary containment system within 24 hours, or at the earliest practicable time if the existing detection technology or site conditions will not allow detection of a release within 24 hours;

(4) Sloped or otherwise designed or operated to drain and remove liquids resulting from leaks, spills, or precipitation. Spilled or leaked waste and accumulated precipitation must be removed from the secondary containment system within 24 hours, or in as timely a manner as is possible to prevent harm to human health or the environment, if removal of the released waste or accumulated precipitation cannot be accomplished within 24 hours.

[Note: If the collected material is a hazardous waste under Part 261 of this chapter, it is subject to management as a hazardous waste in accordance with all applicable requirements of Parts 262 through 265 of this chapter. If the collected material is discharged through a point source to waters of the United States, it is subject to the requirements of sections 301, 304, and 402 of the Clean Water Act, as amended. If discharged to a Publicly Owned Treatment Works (POTWs), it is subject to the requirements of section 307 of the Clean Water Act, as amended. If the collected material is released to the environment, it may be subject to the reporting requirements of 40 *CFR* Part 302.)

(d) Secondary containment for tanks must include one or more of the following devices:

(1) A liner (external to the tank);

(2) A vault;

(3) A double-walled tank; or

(4) An equivalent device as approved by the Regional Administrator.

RCRA 229

(e) In addition to the requirements of paragraphs (b), (c), and (d) of this section, secondary containment systems must satisfy the following requirements:

(1) External liner systems must be:

(i) Designed or operated to contain 100 percent of the capacity of the largest tank within its boundary;

(ii) Designed or operated to prevent run-on or infiltration of precipitation into the secondary containment system unless the collection system has sufficient excess capacity to contain run-on or infiltration. Such additional capacity must be sufficient excess capacity to contain precipitation from a 25-year, 24-hour rainfall event.

(iii) Free of cracks or gaps; and

(iv) Designed and installed to completely surround the tank and to cover all surrounding earth likely to come into contact with the waste if released from the tank(s) (i.e., capable of preventing lateral as well as vertical migration of the waste).

RCRA 88, 172

(2) Vault systems must be:

(i) Designed or operated to contain 100 percent of the capacity of the largest tank within its boundary;

(ii) Designed or operated to prevent run-on or infiltration of precipitation into the secondary containment system unless the collection system has sufficient excess capacity to contain run-on or infiltration. Such additional capacity must be sufficient to contain precipitation from a 25-year, 24-hour rainfall event;

(iii) Constructed with chemical-resistant water stops in place at all joints (if any);

(iv) Provided with an impermeable interior coating or lining that is compatible with the stored waste and that will prevent migration of waste into the concrete;

(v) Provided with a means to protect against the formation of and ignition of vapors within the vault, if the waste being stored or treated:

(A) Meets the definition of ignitable waste under § 262.21 of this chapter; or

(B) Meets the definition of reactive waste under § 262.21 of this chapter and may form an ignitable or explosive vapor; and

(vi) Provided with an exterior moisture barrier or be otherwise designed or operated to prevent migration of moisture into the vault if the vault is subject to hydraulic pressure.

(3) Double-walled tanks must be:

©1994 by Elsevier Science Inc.

(i) Designed as an integral structure (i.e., an inner tank within an outer shell) so that any release from the inner tank is contained by the outer shell; RCRA 156

(ii) Protected, if constructed of metal, from both corrosion of the primary tank interior and the external surface of the outer shell; and

(iii) Provided with a built-in, continuous leak detection system capable of detecting a release within 24 hours or at the earliest practicable time, if the owner or operator can demonstrate to the Regional Administrator, and the Regional Administrator concurs, that the existing leak detection technology or site conditions will not allow detection of a release within 24 hours.

[Note: The provisions outlined in the Steel Tank Institute's (STI) "Standard for Dual Wall Underground Steel Storage Tanks" may be used as guidelines for aspects of the design of underground steel double-walled tanks.]

(f) Ancillary equipment must be provided with full secondary containment (e.g., trench, jacketing, double-walled piping) that meets the requirements of paragraphs (b) and (c) of this section except for:

(1) Aboveground piping (exclusive of flanges, joints, valves, and connections) that are visually inspected for leaks on a daily basis;

(2) Welded flanges, welded joints, and welded connections that are visually inspected for leaks on a daily basis;

(3) Sealless or magnetic coupling pumps and sealless valves, that are visually inspected for leaks on a daily basis; and

(4) Pressurized aboveground piping systems with automatic shut-off devices (e.g., excess flow check valves, flow metering shutdown devices, loss of pressure actuated shut-off devices) that are visually inspected for leaks on a daily basis.

(g) The owner or operator may obtain a variance from the requirements of this Section if the Regional Administrator finds, as a result of a demonstration by the owner or operator, either: that alternative design and operating practices, together with location characteristics, will prevent the migration of hazardous waste or hazardous constituents into the ground water *or* surface water at least as effectively as secondary containment during the active life of the tank system *or* that in the event of a release that does migrate to ground water or surface water, no substantial present or potential hazard will be posed to human health or the environment. New underground tank systems may not, per a demonstration in accordance with paragraph (g)(2) of this section, be exempted from the secondary containment requirements of this section. Application for a variance as allowed in paragraph (g) of this section does not waive compliance with the requirements of this Subpart for new tank systems. RCRA 69

(1) In deciding whether to grant a variance based on a demonstration of equivalent protection of ground water and surface water, the Regional Administrator will consider:

(i) The nature and quantity of the waste;

(ii) The proposed alternate design and operation;

(iii) The hydrogeologic setting of the facility, including the thickness of soils between the tank system and ground water; and

(iv) All other factors that would influence the quality and mobility of the hazardous constituents and the potential for them to migrate to ground water or surface water.

(2) In deciding whether to grant a variance based on a demonstration of no substantial present or potential hazard, the Regional Administrator will consider:

(i) The potential adverse effects on ground water, surface water, and land quality taking into account:

(A) The physical and chemical characteristics of the waste in the tank system, including its potential for migration,

(B) The hydrogeological characteristics of the facility and surrounding land,

(C) The potential for health risks caused by human exposure to waste constituents,

(D) The potential for damage to wildlife, crops, vegetation, and physical structures caused by exposure to waste constituents, and

(E) The persistence and permanence of the potential adverse effects;

(ii) The potential adverse effects of a release on ground-water quality, taking into account:

(A) The quantity and quality of ground water and the direction of ground-water flow,

(B) The proximity and withdrawal rates of water in the area,

(C) The current and future uses of ground water in the area, and

©1994 by Elsevier Science Inc.

(D) The existing quality of ground water, including other sources of contamination and their cumulative impact on the ground-water quality;

(iii) The potential adverse effects of a release on surface water quality, taking into account:

(A) The quantity and quality of ground water and the direction of ground-water flow,

(B) The patterns of rainfall in the region,

(C) The proximity of the tank system to surface waters,

(D) The current and future uses of surface waters in the area and any water quality standards established for those surface waters, and

(E) The existing quality of surface water, including other sources of contamination and the cumulative impact on surface-water quality; and

(iv) The potential adverse effects of a release on the land surrounding the tank system, taking into account:

(A) The patterns of rainfall in the region, and

(B) The current and future uses of the surrounding land.

(3) The owner or operator of a tank system, for which a variance from secondary containment had been granted in accordance with the requirements of paragraph (g)(1) of this section, at which a release of hazardous waste has occurred from the primary tank system but has not migrated beyond the zone of engineering control (as established in the variance), must:

(i) Comply with the requirements of § 265.196, except paragraph (d), and

(ii) Decontaminate or remove contaminated soil to the extent necessary to:

(A) Enable the tank system, for which the variance was granted, to resume operation with the capability for the detection of and response to releases at least equivalent to the capability it had prior to the release, and

(B) Prevent the migration of hazardous waste or hazardous constituents to ground water or surface water; and

(iii) If contaminated soil cannot be removed or decontaminated in accordance with paragraph (g)(3)(ii) of this section, comply with the requirements of § 265.197(b).

(4) The owner or operator of a tank system, for which a variance from secondary containment had been granted in accordance with the requirements of paragraph (g)(1) of this section, at which a release of hazardous waste has occurred from the primary tank system and has migrated beyond the zone of engineering control (as established in the variance), must:

(i) Comply with the requirements of § 265.196(a), (b), (c), and (d); and

(ii) Prevent the migration of hazardous waste or hazardous constituents to ground water or surface water, if possible, and decontaminate or remove contaminated soil. If contaminated soil cannot be decontaminated or removed, or if ground water has been contaminated, the owner or operator must comply with the requirements of § 265.197(b);

(iii) If repairing, replacing, or reinstalling the tank system, provide secondary containment in accordance with the requirements of paragraphs (a) through (f) of this section or reapply for a variance from secondary containment and meet the requirements for new tank systems in § 265.192 if the tank system is replaced. The owner or operator must comply with these requirements even if contaminated soil can be decontaminated or removed, and ground water or surface water has not been contaminated.

(h) The following procedures must be followed in order to request a variance from secondary containment:

(1) The Regional Administrator must be notified in writing by the owner or operator that he intends to conduct and submit a demonstration for a variance from secondary containment as allowed in paragraph (g) of this section according to the following schedule:

(i) For existing tank systems, at least 24 months prior to the date that secondary containment must be provided in accordance with paragraph (a) of this section; and

(ii) For new tank systems, at least 30 days prior to entering into a contract for installation of the tank system.

(2) As part of the notification, the owner or operator must also submit to the Regional Administrator a description of the steps necessary to conduct the demonstration and a timetable for completing each of the steps. The demonstration must address each of the factors listed in paragraph (g)(1) or paragraph (g)(2) of this section.

(3) The demonstration for a variance must be completed and submitted to the Regional Administrator within 180 days after notifying the Regional Administrator of intent to conduct the demonstration.

©1994 by Elsevier Science Inc.

The Regional Administrator will inform the public, through a newspaper notice, of the availability of the demonstration a variance. The notice shall be placed in a daily or weekly major local newspaper of general circulation and shall vide at least 30 days from the date of the notice for the public to review and comment on the demonstration for a variance. The Regional Administrator also will hold a public hearing, in response to a request or at his own discretion, whenever such a hearing might clarify one or more issues concerning the demonstration for a variance. Public notice of the hearing will be given at least 30 days prior to the date of the hearing and may be given at the same time as notice of the opportunity for the public to review and comment on the demonstration. These two notices may be combined.

(5) The Regional Administrator will approve or disapprove the request for a variance within 90 days of receipt of the demonstration from the owner or operator and will notify in writing the owner or operator and each person who submitted written comments or requested notice of the variance decision. If the demonstration for a variance is incomplete or does not include sufficient information, the 90-day time period will begin when the Regional Administrator receives a complete demonstration, including all information necessary to make a final determination. If the public comment period in paragraph (h)(4) of this section is extended, the 90-day time period will be similarly extended.

All tank systems, until such time as secondary containment meeting the requirements of this section is provided, must mply with the following: RCRA 77

(1) For non-enterable underground tanks, a leak test that meets the requirements of § 265.191(b)(5) must be conducted at least annually;

(2) For other than non-enterable underground tanks and for all ancillary equipment, an annual leak test, as described in paragraph (i)(1) of this section, or an internal inspection or other tank integrity examination by an independent, qualified, registered professional engineer that addresses cracks, leaks, corrosion, and erosion must be conducted at least annually. The owner or operator must remove the stored waste from the tank, if necessary, to allow the condition of all internal tank surfaces to be assessed.

[Note: The practices described in the American Petroleum Institute (API) Publication Guide for Inspection of Refinery Equipment, Chapter XIII, "Atmospheric and Low-Pressure Storage Tanks," 4th edition, 1981, may be used, where applicable, as guidelines for assessing the overall condition of the tank system.]

) The owner or operator must maintain on file at the facility a record of the results of the assessments conducted in ordance with paragraphs (i)(1) through (i)(3) of this section.

) If a tank system or component is found to be leaking or unfit-for-use as a result of the leak test or assessment in paragraphs (i)(1) through (i)(3) of this section, the owner or operator must comply with the requirements of § 265.196.

[51 FR 25479, July 14, 1986, as amended at 51 FR 29430, Aug. 15, 1986; 53 FR 34087, Sept. 2, 1988]

265.194 General operating requirements.

) Hazardous wastes or treatment reagents must not be placed in a tank system if they could cause the tank, its ancillary uipment, or the containment system to rupture, leak, corrode, or otherwise fail.

) The owner or operator must use appropriate controls and practices to prevent spills and overflows from tank or containment stems. These include at a minimum:

(1) Spill prevention controls (e.g., check valves, dry discount couplings);

(2) Overfill prevention controls (e.g., level sensing devices, high level alarms, automatic feed cutoff, or bypass to a standby tank); and

(3) Maintenance of sufficient freeboard in uncovered tanks to prevent overtopping by wave or wind action or by precipitation.

) The owner or operator must comply with the requirements of § 265.196 if a leak or spill occurs in the tank system.

265.195 Inspections. RCRA 74

) The owner or operator must inspect, where present, at least once each operating day:

(1) Overfill/spill control equipment (e.g., waste-feed cutoff systems, bypass systems, and drainage systems) to ensure that is in good working order;

Appendix B

Qualification of Contractors

SUBCONTRACTOR QUALIFICATION STATEMENT

Lockheed Idaho Technologies Company (LITCO) is the Construction Manager under contract with DOE-ID for supporting and overseeing construction activities at the INEL. The construction for the Filter Leach Modifications Project was performed in the Filter Handling Cell of the Decontamination Facility at the New Waste Calcining Facility (NWCF). Work was performed both inside the Filter Handling Cell, in the clean operating corridor, and in adjacent cells. All of the cells are radioactively contaminated. The areas of work requiring access into radiation areas was performed by personnel from both Wheeler and Dynamics.

Dynamics, Incorporated was selected as the Subcontractor, and performed the mechanical installation inside and outside of the cell. Wheeler, Electric, was selected to perform the electrical work. Both Dynamics and Wheeler have previously qualified to perform construction work at the INEL. They have both had many years of successful construction project completion at the INEL.

Dynamics performed the installation of the piping and equipment. Wheeler Electric installed all of the necessary electrical equipment. All of the work was completed as specified, and all inspection requirements were successfully met.

Thornton H. Waite
Filter Leach Modifications Project
March 17, 1995

Appendix C

Certification Records of Welders and Inspectors

QUALITY ASSURANCE INSPECTION SECTION

INSPECTOR QUALIFICATIONS

July 12, 1994 NAME		GENERAL INSP.	PIPE CODE	PRESSURE TEST	ELEC CODE	ELEC EQUIP	HI-POT TEST	CIVIL CODE	SLUMP TEST	CYLINDER TEST	AIR TEST	UNIT WEIGHT TEST	SOILS/ ASPHALT DENSITY	SURVEY
MT Baker	36	9/96	9/96	9/96										
BB Brown	19	9/96	9/96	9/96										
DF Capp	8	9/96	9/96	9/96										
DP Crossley	42	9/96	9/96	9/96										
PC Dunlap	33	9/96	9/96	9/96										
LE Gilson	9	9/96		9/96				9/96	9/96	9/96	9/96	9/96	9/96	9/96
BC Killian	10	9/96	9/96	9/96					9/96	9/96	9/96	9/96	9/96 S	
DL Klinger	39	9/96	9/96	9/96										
AJ Lords	45	9/96		9/96	9/96	9/96	9/96							
WR Macfarlane	43	9/96	9/96	9/96	9/96	9/96	9/96		9/96	9/96				
[illegible]rtin	23	9/96	9/96	9/96				9/96	9/96	9/96	9/96	9/96	9/96	9/96
TL Medran Piping	30	9/96	9/96	9/96										
CR Nate	31	9/96	9/96	9/96										
MJ Osborne	46	9/96	9/96	9/96	9/96	9/96	9/96							
MA Redden Electrical	15	9/96			9/96	9/96	9/96							
IB Robison	17	9/96		9/96				9/96	9/96	9/96	9/96	9/96	9/96	9/96
BC Smith	22	9/96							2/97	2/97	2/97	2/97	2/97	
LL Smith	7	9/96	9/96	9/96										9/96 L

QUALITY ASSURANCE INSPECTION SECTION

NDE CERTIFICATIONS

September 30, 1994 NAME		RADIOGRAPHY RT II	VISUAL EXAM VT II	LIQUID PENETRANT LP II	ULTRASONIC EXAM UT II	ULTRASONIC THICKNESS UTT	LEAK TESTING LT II	MAGNETIC PARTICLE MP II	EDDY CURRENT ET II
MT Baker	36		11/94	11/94			6/96	8/95	
BB Brown	19	8/95	2/97	5/95			1/97	5/95	
DF Capp	8	2/97	2/97	8/96			2/97	9/96	
DP Crossley	42	8/95	2/97	7/95			2/97		
PC Dunlap	33	8/95	1/97	5/95		5/95	1/97	5/95	
LE Gilson	9		2/97	8/95			1/97		
BC Killian	10	8/95	2/97	5/95		5/95	2/97	10/95	2/97
DL Klinger	39	8/95	2/97	9/95		2/97	2/97	10/95	
AJ Lords	45		2/97	5/95			2/97		
[illegible] Macfarlane	43		2/97	5/95			6/97		
[illegible] Martin	23		1/97	5/95			6/97		
TL Medran	30	8/95	2/97	6/95		5/95	5/97	5/95	
CR Nate	31	8/95	6/97	6/95				10/95	
MJ Osborne	46		2/97	6/95					
MA Redden	15		7/97	5/95			7/97		
IB Robison	17	8/95 I	7/97	5/95			9/96		
BC Smith	22	8/95	11/94	5/95			6/97	5/95	
LL Smith	7	8/95	2/97	5/95		5/95	2/97	5/95	

See instructions on reverse side

Form MK-[illegible] (Rev. 03/31/89)

Construction Vendor Data Submittal and Disposition Form

Page 1 of 1

To:
MK-Ferguson of Idaho Company
P.O. Box 1745
Idaho Falls, ID 83403-1745
ATTN: Document Control MS-5300

(1) Submittal (Project) Number: 299425-32
(2) Rev. 0
(3) Date of Submittal 11/16/94
(4) Project Title MODS TO THE HIEPA FILTER LEACH SYSTEM
(5) Subcontract Number S -299425
(6) Subcontractor DYNAMICS INCORPORATED
(7) Subcontractor Code 9410-34

Disposition Legend
(A) Work may proceed subject to incorporation of any comments noted.
(B) Revise and resubmit. Work may proceed subject to incorporation of comments noted.
(C) Revise and resubmit. Work may NOT proceed.
(D) Information only. Work may proceed.

(8) Line No.	Rev.	(9) VDS Item No.	(10) Spec/Dwg Reference	(11) Qty Encl	(12) Submittal Status: Resub	Mand Aprvl	Or-Eq Aprvl	Info Only	Addnl Info	(13) Submittal Data: Manufacturer's Name	Model / Serial No.	Heat No.	Description	Document No.	Rev	(14) Disp Status
		18	15024-3	8									WELDER QUALIFICATIONS (OFF-SITE)			A
A													G.D. PARRISH)			
					NOV 1 3 1994											
					RECEIVED											

(15) Remarks

Tracy Chesley
(16) Subcontractor Signature

11-16-94
Date

(17) C/M Review / Approval Required ☑ Yes ☐ No

(18) Recommended Disposition A

Rex Duke 11/17/94
(19) MK-FIC Reviewing Agency Signature / Date

☐ (20) Additional Comments Attached

(21) O/C Review / Approval Required ☑ Yes ☐ No

File
TH Waite
RM Barker

TH Waite RMB 11/22/94
(22) O/C Reviewing Agency Signature / Date

☐ (23) Additional Comments Attached

(24) I Acknowledge receipt of the data indicated and (agree ☐ disagree ☐) to incorporate any comments.

Subcontractor Signature

(25) Date Received	Date Forwarded	Forwarded To	Qty Encl	Initials
11-17	11-17	Rex Duke	7	CB
11-17	11-17	K. Orr	7	CB
11-17	11-17	L. Mays	7	CB
11-18	11/22	CB	2	XM

(26) Distribution	Cvr	Sets	Distribution	Cvr	Sets
Document Control			Subcontractor		
ES&H Department			Operating Contractor		
Quality Assurance					
[illegible]					

INEL WELDER CERTIFICATION STATUS REPORT / CONST ACTIVE WELDERS

G = Groove
F = Fillets

Positions: (1) - Flat (2) - Horizontal (3) - Vertical (4) - Overhead (5) - Pipe Horizontal (6) - 45 deg. Incline
Brazing - (L) = Lap joint DH = Down Hill W/BO FM = With/Without Filler Material Plug = Plug Weld * = Backing Strip
<= = Less Than or Equal To
(Example: Welding - 12GF = Flat, Horizontal Position, Groove and Fillets)

Date: 09/01/94 PAGE 15

Name	S No.	WELDER Code	Company	WPS Qualified	ASME Positions Qualified	AWS D1.1 Positions Qualified	AWS D1.2 Positions Qualified	AWS D1.3 Positions Qualified	AWS D9.1 Positions Qualified	AWS D14.1 Positions Qualified	Max. Thick	Min. Thick	Min. Dia.	Released or Renewal	Exp. Date	Orig. Test
				S2.0	12 G/F						0.436	0.062	1.000	06/22/94	12/22/94	06/22/94
				S2.24		ALL F					0.294	0.125	0.500	06/22/94	12/22/94	12/10/93
				S3.16		123 F					0.500	0.125	24.000	06/22/94	12/22/94	06/22/94
Nilsson, H. F.	46213	ALQ	CONST	C3.5		ALL G/F *					0.750	0.125	24.000	04/21/94	10/21/94	10/22/93
Norman, M. P.	50365	ASU	CONST	A2.10					123 G/F		0.129	0.062	0.000	04/27/94	10/27/94	09/20/93
				C2.11		ALL G/F *					0.500	0.125	24.000	04/27/94	10/27/94	09/20/93
				C2.2					ALL G/F		0.239	0.062	0.000	04/27/94	10/27/94	09/20/93
				C3.5		ALL G/F *					0.500	0.125	24.000	04/27/94	10/27/94	04/27/94
				CS2.4					ALL G/F		0.239	0.062	0.000	07/26/94	01/26/95	07/26/94
				S2.11					ALL G/F		0.239	0.062	0.000	04/27/94	10/27/94	11/30/92
Oneida, G. F.	46589	AKU	CONST	C2.11		ALL F					0.294	0.125	0.500	04/06/94	10/06/94	04/06/94
				C3.5		ALL G/F					0.500	0.125	24.000	04/06/94	10/06/94	10/30/89
				CS2.7		ALL F					0.294	0.125	0.500	04/06/94	10/06/94	08/16/93
				S2.24		ALL F					0.294	0.125	0.500	04/06/94	10/06/94	04/25/91
Parrish, G. D.	23181	MT	CONST	C2.0	ALL G/F						0.294	0.062	0.500	06/23/94	12/23/94	12/01/89
				CS2.0	ALL G/F						0.294	0.062	0.500	06/23/94	12/23/94	
				S2.0	ALL G/F						0.294	0.062	0.500	06/23/94	12/23/94	
Quinton, B. D.	71186	ASR	CONST	C3.5		123 G/F *					0.750	0.125	24.000	07/27/94	01/27/95	07/27/94
Ray, K. D.	50142	AJV	CONST	C2.0	ALL G/F						0.750	0.062	0.500	05/03/94	11/03/94	05/03/94
				CS2.0	ALL G/F						0.750	0.062	0.500	05/03/94	11/03/94	05/03/94
				S2.0	ALL G/F						0.750	0.062	0.500	05/03/94	11/03/94	06/25/90
				S3.0	ALL G/F						0.750	0.062	2.875	05/03/94	11/03/94	05/03/94
				S6.9	ALL G/F *						1.000	0.187	2.875	05/03/94	11/03/94	05/03/94
Reid, G. S.	65413	AUL	CONST	C2.0	ALL G/F						0.294	0.062	.5000	06/23/94	12/23/94	06/23/94
				CS2.0	ALL G/F						0.294	0.062	0.500	06/23/94	12/23/94	06/23/94
				S2.0	ALL G/F						0.294	0.062	0.500	06/23/94	12/23/94	06/23/94
Remer, B. J.	39706	RU	CONST	C2.11		ALL G/F *					0.500	0.125	24.000	05/03/94	11/03/94	05/20/92
				C3.5		ALL G/F *					0.500	0.125	0.000	05/03/94	11/03/94	12/19/89
				CS2.4		ALL G/F *					0.500	0.125	24.000	05/03/94	11/03/94	05/20/92
				CS2.7		ALL G/F *					0.500	0.125	24.000	05/03/94	11/03/94	11/20/92
				S2.24		ALL G/F *					0.500	0.125	24.000	05/03/94	11/03/94	05/20/92
				S6.10		ALL F *					0.000	0.125	24.000	05/03/94	11/03/94	12/21/92
				S6.3		ALL F *					0.000	0.125	24.000	05/03/94	11/03/94	12/21/92

WORK MAY PROCEED.

TO INCL
CHANGES
REVISE AND RESUBMIT
WORK MAY NOT
REVIEW NOT REQUIRED
WORK MAY PROCEED

CONTRACT NO 299425-32
TW/LM
11-22-94

See instructions on reverse side

Form MKF-0500 (Rev. 03/25/94)

Construction Vendor Data Transmittal and Disposition Form

To:
MK-Ferguson of Idaho Company
P.O. Box 1745
Idaho Falls, ID 83403-1745
ATTN: Document Control MS-5300

(1) Submittal (Project) Number: 299425- 31
(2) Rev. 0
(3) Date of Submittal 11/16/94
(4) Project Title MODS TO THE HEPA FILTER LEACH SYSTEM
(5) Subcontract Number S-299425
(6) Subcontractor DYNAMICS INCORPORATED
(7) Subcontractor Code 9410-33

Disposition Legend
(A) Work may proceed subject to incorporation of any comments noted.
(B) Revise and resubmit. Work may proceed subject to incorporation of comments noted.
(C) Revise and resubmit. Work may NOT proceed.
(D) Information only. Work may proceed.

(8) Line No.	Rev.	(9) VDS Item No.	(10) Spec/Dwg Reference	(11) Qty Encl	(12) Submittal Status: Resub	Mand Aprvl	Or-Eq Aprvl	Info Only	Addnl Info	(13) Submittal Data: Manufacturer's Name	Model / Serial No.	Heat No.	Description	Document No.	Rev	(14) Disp Status
		16	15024-3	1						N/A	N/A	N/A	WELDER QUALIFICATIONS (ON-SITE)			A
A													(G.D. PARRISH)			
					11/17/94											
					EC											

(15) Remarks

Jimmy Whisley
(16) Subcontractor Signature

11-16-94
Date

(17) C/M Review / Approval Required ☑ Yes ☐ No

(18) Recommended Disposition A

R. Duke 11/17/94
(19) MK-FIC Reviewing Agency Signature / Date

☐ (20) Additional Comments Attached

(21) O/C Review / Approval Required ☑ Yes ☐ No

File
TH Waite
RM Barker

TH Waite 11/22/94
(22) O/C Reviewing Agency Signature / Date

☐ (23) Additional Comments Attached

(24) I Acknowledge receipt of the data indicated and (agree ☐ disagree ☐) to incorporate comments.

(25) Date Received	Date Forwarded	Forwarded To	Qty Encl	Initials
11-17	11-17	Rex Duke	7	CB
11-17	11-17	K. Orr	7	CB
11-17	11-17	L. Mays	7	CB
11-18	11/22	CB	2	KM

(26) Distribution	Cvr	Sets	Distribution	Cvr	Sets
Document Control			Subcontractor		
ES&H Department			Operating Contr		
Quality Assurance					

INEL WELDER CERTIFICATION STATUS REPORT / CONST ACTIVE WELDERS

G = Grooves
F = Fillets

Positions: (1) - Flat (2) - Horizontal (3) - Vertical (4) - Overhead (5) - Pipe Horizontal (6) - 45 deg. Incline
Brazing - LJ = Lap Joint DN = Down Hill W/WO FM = With/Without Filler Material Plug = Plug Weld * = Backing Strip
<= = Less than or Equal To
(Example: Welding - (2)G/ = Flat, Horizontal Position, Groove and Fillets)

Date: 09/01/94 PAGE 15

Name	S No.	WELDER Code	Company	WPS Qualified	ASME Positions Qualified	AWS D1.1 Positions Qualified	AWS D1.2 Positions Qualified	AWS D1.3 Positions Qualified	AWS D9.1 Positions Qualified	AWS D14.1 Positions Qualified	Max. Thick	Min. Thick	Min. Dia.	Retested or Renewal	Exp. Date	Orig. Test
				S2.0	(2 G/F						0.436	0.062	1.000	06/22/94	12/22/94	06/22/94
				S2.24		ALL F					0.294	0.125	0.500	06/22/94	12/22/94	12/10/93
				S3.16		(2) F					0.500	0.125	24.000	06/22/94	12/22/94	06/22/94
Nilsson, R. F.	46213	ALQ	CONST	C3.5		ALL G/F *					0.750	0.125	24.000	04/21/94	10/21/94	10/22/93
Norman, M. P.	50365	ASU	CONST	A2.10					(2) G/F		0.129	0.062	0.000	04/27/94	10/27/94	09/20/93
				C2.11		ALL G/F *					0.500	0.125	24.000	04/27/94	10/27/94	09/20/93
				C2.2					ALL G/F		0.239	0.062	0.000	04/27/94	10/27/94	09/20/93
				C3.5		ALL G/F *					0.500	0.125	24.000	04/27/94	10/27/94	04/27/94
				CS2.4					ALL G/F		0.239	0.062	0.000	07/26/94	01/26/95	07/26/94
				S2.19					ALL G/F		0.239	0.062	0.000	04/27/94	10/27/94	11/30/92
Oneida, G. F.	46589	AKU	CONST	C2.11		ALL F					0.294	0.125	0.500	04/06/94	10/06/94	04/06/94
				C3.5		ALL G/F					0.500	0.125	24.000	04/06/94	10/06/94	10/30/89
				CS2.7		ALL F					0.294	0.125	0.500	04/06/94	10/06/94	08/16/93
				S2.24		ALL F					0.294	0.125	0.500	04/06/94	10/06/94	04/25/91
Parrish, G. D.	23161	NI	CONST	C2.0	ALL G/F						0.294	0.062	0.500	06/23/94	12/23/94	12/01/89
				CS2.0	ALL G/F						0.294	0.062	0.500	06/23/94	12/23/94	
				S2.0	ALL G/F						0.294	0.062	0.500	06/23/94	12/23/94	
Quinton, R. D.	71186	ASR	CONST	C3.5		(2) G/F *					0.750	0.125	24.000	07/27/94	01/27/95	07/27/94
Ray, K. D.	50142	AJV	CONST	C2.0	ALL G/F						0.750	0.062	0.500	05/03/94	11/03/94	05/03/94
				CS2.0	ALL G/F						0.750	0.062	0.500	05/03/94	11/03/94	05/03/94
				S2.0	ALL G/F						0.750	0.062	0.500	05/03/94	11/03/94	06/25/90
				S3.0	ALL G/F						0.750	0.062	3.875	05/03/94	11/03/94	05/03/94
				S6.9	ALL G/F *						1.000	0.187	3.875	05/03/94	11/03/94	05/03/94
Reid, G. S.	65432	AUL	CONST	C2.0	ALL G/F						0.294	0.062	.5000	06/23/94	12/23/94	06/23/94
				CS2.0	ALL G/F						0.294	0.062	0.500	06/23/94	12/23/94	06/23/94
				S2.0	ALL G/F						0.294	0.062	0.500	06/23/94	12/23/94	06/23/94
Remer, D. J.	39766	RU	CONST	C2.11		ALL G/F *					0.500	0.125	24.000	05/03/94	11/03/94	05/20/92
				C3.5		ALL G/F *					0.500	0.125	0.000	05/03/94	11/03/94	12/10/89
				CS2.4		ALL G/F *					0.500	0.125	24.000	05/03/94	11/03/94	05/20/92
				CS2.7		ALL G/F *					0.500	0.125	24.000	05/03/94	11/03/94	11/20/92
				S2.24		ALL G/F *					0.500	0.125	24.000	05/03/94	11/03/94	05/20/92
				S6.10		ALL F *					0.000	0.125	24.000	05/03/94	11/03/94	12/31/92
				S6.3		ALL F *					0.000	0.125	24.000	05/03/94	11/03/94	12/31/92

X WORK MAY PROCEED.

[ ] REVISE AND RESUBMIT. WORK MAY PROCEED SUBJECT TO INCORPORATION OF CHANGES INDICATED.

[ ] REVISE AND RESUBMIT. WORK MAY NOT PROCEED.

[ ] RESUBMITTAL NOT REQUIRED. WORK MAY PROCEED.

PROJECT NO 299425-31
TW/LM
11-22-94

Construction Vendor Data Transmittal and Disposition Form

Page ____ of ____

-Ferguson of Idaho Company
. Box 1745
ho Falls, ID 83403-1745
TN: Document Control MS-5300

(1) Submittal (Project) Number: 299425- [illegible] (2) Rev. 0 (3) Date of Submittal 10/19/94

(4) Project Title MODS TO THE HEPA FILTER LEACHING SYSTEM (5) Subcontract Number S-299425

(6) Subcontractor DYNAMICS INCORPORATED (7) Subcontractor Code 9410-19

sition (A) Work may proceed subject to incorporation of any comments noted. (B) Revise and resubmit. Work may proceed subject to incorporation of comments noted.

end (C) Revise and resubmit. Work may NOT proceed. (D) Information only. Work may proceed.

(8) Rev.	(9) VDS Item No.	(10) Spec/Dwg Reference	(11) Qty Encl	(12) Submittal Status: Resub	Mand Apvl	Or-Eq Apvl	Info Only	Addnl Info	(13) Submittal Data: Manufacturer's Name	Model / Serial No.	Heat No.	Description	Document No.	Rev	(14) Disp Status
—	18	15024-3	8									WELDER QUALIFICATIONS (OFF-SITE) (D. MUNN)			A

Remarks

(16) Subcontractor Signature: [illegible] Date: 10-19-94

C/M Review / Approval Required ☑ Yes ☐ No

(18) Recommended Disposition A

R. Duke 10/20/94

(19) MK-FIC Reviewing Agency Signature / Date

☐ (20) Additional Comments Attached

O/C Review / Approval Required ☑ Yes ☐ No

File
Waite
BARKER

T.H. Waite for KM 10-25-94

(22) O/C Reviewing Agency Signature / Date

☐ (23) Additional Comments Attached

(25) Date Received	Date Forwarded	Forwarded To	Qty Encl	Initials
10-20	10-20	Rex Pabe	7	CB
10-20	10-20	T. Orr	7	CB
10-21	10-21	L. Mays	1	[illegible]
10-24	10-25	C. Briscoe	2	KM

(26) Distribution	Cvr	Sets	Distribution	Cvr	Sets
Document Control			Subcontractor		
ES&H Department			Operating Contractor		
Quality Assurance					
Construction Supervisor					

I Acknowledge receipt of the data indicated and (agree ☐ disagree ☐) to incorporate any comments.

ontractor Signature Date

Name _____ Ross, D. C.

Security Number 11657

Welder Code 11

☐ ASME ☐ AWS D1.1 ☐ AWS D1.2 ☐ AWS D1.3 AWS D8.

WPS/BPS Number	Process	Position	Thickness Range	Diameter	Expiration Date
G2.0	GTAW	ALL G/F	0.062 0.394	0.500	04/14/95
G3.0	SMAW	ALL G/F	0.062 0.135	1.000	04/11/95
G8.0	GT/SM	ALL G/F	0.062 0.135	1.000	04/14/95
GS2.0	GTAW	ALL G/F	0.062 0.394	0.500	04/14/95
BS2.2	GTAW	ALL G/F	0.062 0.135	1.000	04/11/95
S2.0	GTAW	ALL G/F	0.062 0.394	0.500	04/14/95

Ray Duke

(REV. 10-90)

QUALIFICATION RECORD CARD

Idaho National Engineering Laboratory

INEL Welding Engineer Signature R. Duke

Positions

1	Flat
2	Horizontal
3	Vertical
4	Overhead
5	Pipe Horizontal
6	45° Incline
G	Groove(s)
F	Fillet(s)
DH	Down Hill
LJ	Lap Joint
Plug	Plug Weld
W/WO FM	With / Without Filler Material
*	Backing Strip

Welding Processes

GTAW	Gas Tungsten Arc Welding
SMAW	Shielding Metal Arc Welding
GMAW	Gas Metal Arc Welding
FCAW	Flux Cored Arc Welding
TB	Torch Brazing H-101

Examples

Welding-12GF	Flat, Horizontal Position with Groove and Fillets
Brazing -LJ	Lap Joint

This Qualification is valid only for INEL projects until it expires or is revoked

299425-18
THW/LM
10-25-94

See instructions on reverse side

Construction Vendor Data Transmittal and Disposition Form

Page 1

;-Ferguson of Idaho Company), Box 1745 ho Falls, ID 83403-1745 TN: Document Control MS-5300	(1) Submittal (Project) Number: 299425-18 (2) Rev. 0 (3) Date of Submittal 10/19/94 (4) Project Title MODS TO THE HEPA FILTER LEACHING SYSTEM (5) Subcontract Number S-299425 (6) Subcontractor DYNAMICS INCORPORATED (7) Subcontractor Code 9410-18

sition (A) Work may proceed subject to incorporation of any comments noted. (B) Revise and resubmit. Work may proceed subject to incorporation of comments noted.
ed (C) Revise and resubmit. Work may NOT proceed. (D) Information only. Work may proceed.

) ie No. Rev.	(9) VHS Item No.	(10) Spec/Dwg Reference	(11) Qty Encl	(12) Submittal Status: Resub	Mand Aprvl	Or-Eq Aprvl	Info Only	Addnl Info	(13) Submittal Data: Manufacturer's Name	Model / Serial No.	Heat No.	Description	Document No.	Rev	(14) Disp Status
–	16	15024-3	8									WELDER QUALIFICATIONS (ON-SITE) (D. MUNN)			A

Remarks

Barry R. Bailey 10-19-94
(16) Subcontractor Signature Date

C/M Review / Approval Required ☑ Yes ☐ No (18) Recommended Disposition A

R Burke 10/20/94
(19) MK-FIC Reviewing Agency Signature / Date ☐ (20) Additional Comments Attached

) O/C Review / Approval Required ☑ Yes ☐ No

File
White
BARKER

T. H. Waite 11-25-94
(22) O/C Reviewing Agency Signature / Date ☐ (23) Additional Comments Attached

(25) Date Received	Date Forwarded	Forwarded To	Qty Encl	Initials
10-20	10-20	Rick Dale	7	CB
10-20	10-20	[illegible]	7	Ca
10-21	10-21	L Hays	7	CB
10-24	10-25	C. Briscoe	2	XM

(26) Distribution	Cvr	Sets	Distribution	Cvr	Sets
Document Control			Subcontractor		
ES&H Department			Operating Contractor		
Quality Assurance					
Construction Supervisor					

(24) I Acknowledge receipt of the data indicated and (agree ☐ disagree ☐) to incorporate any comments.

Subcontractor Signature Date

QUALIFICATION RECORD CARD

Idaho National Engineering Laboratory

INEL Welding Engineer Signature: R. Duke

Name: Hess, D. C.

Security Number: 41657

Welder Code: RL

☐ ASME ☐ AWS D1.1 ☐ AWS D1.2 ☐ AWS D1.3 ☐ AWS D9.

WPS/BPS Number	Process	Position	Thickness Range	Diameter	Expiration Date
C2.0	GTAW	ALL G/F	0.062 - 0.394	0.500	04/14/95
C3.0	SMAW	ALL G/F	0.062 - 0.394	1.000	04/11/95
C8.0	GT/SM	ALL G/F	0.062 - 0.394	1.000	04/14/95
CS2.0	GTAW	ALL G/F	0.062 - 0.394	0.500	04/14/95
BS2.2	GTAW	ALL G/F	0.062 - 0.394	1.000	04/11/95
S2.0	GTAW	ALL G/F	0.062 - 0.394	0.500	04/14/95

R. Duke

(REV. 10-90)

Positions

1	Flat
2	Horizontal
3	Vertical
4	Overhead
5	Pipe Horizontal
6	45° incline
G	Groove(s)
F	Fillet(s)
DH	Down Hill
LJ	Lap Joint
Plug	Plug Weld
W/WO FM	With / Without Filler Material
*	Backing Strip

Welding Processes

GTAW	Gas Tungsten Arc Welding
SMAW	Shielding Metal Arc Welding
GMAW	Gas Metal Arc Welding
FCAW	Flux Cored Arc Welding
TB	Torch Brazing H-101

Examples

Welding-12GF	Flat, Horizontal Position with Groove and Fillets
Brazing -LJ	Lap Joint

This Qualification is valid only for INEL projects until it expires or is revoked

X A WORK MAY PROCEED.

☐ B REVISE AND RESUBMIT.

CONTRACT NO 299425-18

BY: THW/LM

DATE: 10-25-94

See instructions on reverse side

Form 8[illegible] (Rev. [illegible])

Construction Vendor Transmittal and Disposition Form

To:
MK-Ferguson of Idaho Company
P.O. Box 1745
Idaho Falls, ID 83403-1745
ATTN: Document Control MS-5300

(1) Submittal (Project) Number: 299425-16
(2) Rev. 0
(3) Date of Submittal 10/03/94
(4) Project Title MODS TO THE HEPA FILTER LEACHING SYSTEM
(5) Subcontract Number S-299425
(6) Subcontractor DYNAMICS INCORPORATED
(7) Subcontractor Code 9410-11

Disposition Legend
(A) Work may proceed subject to incorporation of any comments noted.
(B) Revise and resubmit. Work may proceed subject to incorporation of comments noted.
(C) Revise and resubmit. Work may NOT proceed.
(D) Information only. Work may proceed.

(8) Line No.	(8) Rev.	(9) VDS Item No.	(10) Spec/Dwg Reference	(11) Qty Encl	(12) Submittal Status: Resub	Mand Apvl	Or-Eq Apvl	Info Only	Addnl Info	(13) Submittal Data: Manufacturer's Name	Model / Serial No.	Heat No.	Description	Document No.	Rev
A	—	16	15024-3	8						N/A	N/A	N/A	WELDER QUALIFICATION (ON-SITE)		
													R. H. JAMES		

(15) Remarks

Jerry Wakley 10-3-94
(16) Subcontractor Signature Date

(17) C/M Review / Approval Required ☑ Yes ☐ No

(18) Recommended Disposition A

R Duke 10/12/94
(19) ~~MK-FIC Reviewing Agency~~ Lockheed Signature / Date

☐ (20) Additional Comments Attached

(21) O/C Review / Approval Required ☑ Yes ☐ No

File
TH Waite
RM Barker

T.H. Waite for 10-24-94
(22) O/C Reviewing Agency Signature / Date

☐ (23) Additional Comments Attached

(24) I Acknowledge receipt of the data indicated and (agree ☐ disagree ☐) to incorporate any comments.

Subcontractor Signature

(25) Date Received	Date Forwarded	Forwarded To	Qty Encl	Initials
10-12	10-12	REX DUKE	7	CB
10-12	10-12	K. Orr	7	C[illegible]
10 12	10-12	L. Mays	7	CE
10/13	10/24	C. Briscoe	2	[illegible]

(26) Distribution	Cvr	Sets	Distribution	Cvr
Document Control			Subcontractor	
ES&H Department			Operating Contractor	
Quality Assurance				

INEL WELDER CERTIFICATION STATUS REPORT / CONST ACTIVE WELDERS

G = Grooves
F = Fillets

Positions: (1) - Flat (2) - Horizontal (3) - Vertical (4) - Overhead (5) - Pipe Horizontal (6) - 45 deg. Incline
Brazing - LJ = Lap Joint DH = Down Hill W/OO FM = With/Without Filler Material Plug = Plug Weld * = Backing Strip
<= = Less Than or Equal to
(Example: Welding - 12GF = Flat, Horizontal Position, Groove and Fillets)

Date: 06/01/94 PAGE 62

Name	S No.	WELDER Code	Company	WPS Qualified	ASME Positions Qualified	AWS D1.1 Positions Qualified	AWS D1.2 Positions Qualified	AWS D1.3 Positions Qualified	AWS D9.1 Positions Qualified	AWS D14.1 Positions Qualified	Max. Thick	Min. Thick	Min. Dia.	Released or Renewal	Exp. Date	Orig. Test
Huff, W. B.	49662	SQ	CONST	S2.24		ALL F					0.500	0.125	24.000	08/19/94	02/19/95	06/19/94
Holmlund, B. V.	64933	ASW	CONST	C3.0	12 G/F						0.474	0.062	2.875	08/12/94	02/12/95	06/02/92
Hoover, A. K.	30590	LK	CONST	C2.0	ALL G/F						0.436	0.062	1.000	07/07/94	01/07/95	02/13/87
				C3.0	ALL G/F						0.436	0.062	1.000	07/07/94	01/07/95	06/19/91
				C6.0	ALL G/F						0.436	0.062	1.000	07/07/94	01/07/95	12/19/91
				CS2.0	ALL G/F						0.436	0.062	1.000	07/07/94	01/07/95	09/16/89
				S2.0	ALL G/F						0.436	0.062	1.000	07/07/94	01/07/95	
Howell, D. C.	14714	BH	CONST	C2.0	ALL G/F						0.436	0.062	1.000	07/05/94	01/05/95	10/25/93
				CS2.0	ALL G/F						0.436	0.062	1.000	07/05/94	01/05/95	10/25/93
				S2.0	ALL G/F						0.436	0.062	1.000	07/05/94	01/05/95	10/25/93
Howell, J. L.	44865	GV	CONST	A2.0	ALL F						0.250	0.062	24.000	06/15/94	12/15/94	07/02/93
				A2.5			ALL F				0.500	0.125	24.000	06/15/94	12/15/94	07/02/93
				C2.0	ALL G/F						0.436	0.062	1.000	06/15/94	12/15/94	04/06/93
				C2.11		ALL G/F					0.436	0.125	<=4.500	06/15/94	12/15/94	07/02/93
				C2.7				ALL F			0.188	0.059	0.000	06/15/94	12/15/94	07/01/93
				C3.0	ALL G/F						0.436	0.062	1.000	06/15/94	12/15/94	01/06/93
				C3.5		ALL G/F *					0.750	0.125	24.000	06/15/94	12/15/94	07/01/93
				C6.11		ALL G/F *					0.750	0.125	24.000	06/15/94	12/15/94	07/02/93
				C6.14				ALL F			0.188	0.059	0.000	06/15/94	12/15/94	07/02/93
				C6.0	ALL G/F						0.750	0.062	24.000	06/15/94	12/15/94	07/02/93
				C8.0	ALL G/F						0.436	0.062	1.000	06/15/94	12/15/94	07/02/93
				CS2.0	ALL G/F						0.436	0.062	1.000	06/15/94	12/15/94	04/06/93
				S2.0	ALL G/F						0.436	0.062	0.250	07/13/94	01/13/95	04/06/93
				S2.11					ALL G/F		0.239	0.062	0.000	06/15/94	12/15/94	07/02/93
				S2.24		ALL G/F					0.436	0.125	<=4.500	06/15/94	12/15/94	07/02/93
James, R. M.	46449	ACS	CONST	C2.0	ALL G/F						0.294	0.062	0.250	06/06/94	12/06/94	01/21/87
				C3.5		ALL G/F *					0.750	0.125	24.000	06/06/94	12/06/94	06/08/93
				CS2.0	ALL G/F						0.294	0.062	0.500	06/06/94	12/06/94	
				H2.3	ALL G/F						0.436	0.062	1.000	06/06/94	12/06/94	06/20/91
				HS2.13	ALL G/F						0.432	0.063	1.000	06/06/94	12/06/94	06/20/91
				S2.0	ALL G/F						0.294	0.062	0.250	06/06/94	12/06/94	
Jones, R. S.	47007	ADJ	CONST	C3.5		123 G/F *					0.750	0.125	24.000	04/16/94	10/19/94	06/20/89
				S2.24		ALL F					0.500	0.125	24.000	08/19/94	02/19/95	06/19/94
Jones, T. L.	47796	BS	CONST	C3.0	ALL G/F						0.436	0.062	1.000	06/23/94	12/23/94	07/06/94
				C3.0	ALL G/F						0.436	0.062	1.000	06/23/94	12/23/94	03/08/90

X

299425-16
THW/LM
10-11-01

-Ferguson of Idah [redacted] any
. Box 1745
o Falls, ID 83403-1745
TN: Document Control MS-5300

(1) Submittal (Project) Number: 299425-14 (2) Rev. 0 (3) Date of Submittal 10/3/94

(4) Project Title MODS TO THE HEPA FILTER LEACHING SYSTEM (5) Subcontract Number S-299425

(6) Subcontractor DYNAMICS INCORPORATED (7) Subcontractor Code 9410-13

ition (A) Work may proceed subject to incorporation of any comments noted. (B) Revise and resubmit. Work may proceed subject to incorporation of comments noted.
ed (C) Revise and resubmit. Work may NOT proceed. (D) Information only. Work may proceed.

No. Rev.	(9) VDS Item No.	(10) Spec/Dwg Reference	(11) Qty Encl	(12) Submittal Status: Resub	Mand Aprvl	Or-Eq Aprvl	Info Only	Addnl Info	(13) Submittal Data: Manufacturer's Name	Model / Serial No.	Heat No.	Description	Document No.	Rev	(14) Disp Status
—	18	15024-3	8						N/A	N/A	N/A	WELDER QUALIFICATIONS(OFF-SITE)			A
												R. H. JAMES			

Remarks

Jerry A. Lasley 10-3-94
(16) Subcontractor Signature Date

C/M Review / Approval Required ☑ Yes ☐ No (18) Recommended Disposition A

R. Duke 10/12/94
(19) ~~MH-PIC~~ Lockheed Reviewing Agency Signature / Date ☐ (20) Additional Comments Attached

O/C Review / Approval Required ☑ Yes ☐ No

File
TH White
RM Barker

T.H. White/km 10-24-94
(22) O/C Reviewing Agency Signature / Date ☐ (23) Additional Comments Attached

) I Acknowledge receipt of the data indicated and (agree ☐ disagree ☐) to incorporate any comments.

Subcontractor Signature Date

(25) Date Received	Date Forwarded	Forwarded To	Qty Encl	Initials
10-12	10-12	KEX DUKE	7	CB
10-12	10-12	K. Orr	7	CB
10-12	10-12	L. Mays	7	CB
10/13	10/24	C. Briscoe	2	KM

(26) Distribution	Cvr	Sets	Distribution	Cvr	Sets
Document Control			Subcontractor		
ES&H Department			Operating Contractor		
Quality Assurance					
Construction Supervisor					

[illegible] WELDER CERTIFICATION STATUS REPORT F COMST [illegible] WELDERS

G = Groove
F = Fillets

Positions: (1) - Flat (2) - Horizontal (3) - Vertical (4) - [illegible] (5) - Pipe Horizontal (6) - 45 deg. Incline
Orating - LJ = Lap Joint DH = Down Hill W/WO FM = With/without [illegible] Material Plug = Plug Weld * = Backing Strip
<= = Less Than [illegible] Equal to
(Example: Welding - (2G/F = Flat, Horizontal Position, Groove and Fillets)

Date: 06/01/94 [illegible] 12

Name	S No.	WELDER Code	Company	WPS Qualified	ASME Positions Qualified	AWS D1.1 Positions Qualified	AWS D1.2 Positions Qualified	AWS D1.3 Positions Qualified	AWS D9.1 Positions Qualified	AWS D14.1 Positions Qualified	Max. Thick	Min. Thick	Min. Dia.	Retested or Renewal	Exp. Date	Orig. Test
Huff, W. R.	49662	SQ	COMST	S2.24		ALL F					0.500	0.125	24.000	06/19/94	03/19/95	06/19/94
Holmlund, R. V.	64933	ASN	COMST	C3.0	12 G/F						0.474	0.062	2.875	08/12/94	02/12/95	06/02/92
Hoover, M. R.	30590	LK	COMST	C2.0	ALL G/F						0.436	0.062	1.000	07/07/94	01/07/95	03/15/87
				C3.0	ALL G/F						0.436	0.062	1.000	07/07/94	01/07/95	04/10/91
				C6.0	ALL G/F						0.436	0.062	1.000	07/07/94	01/07/95	12/10/91
				CS2.0	ALL G/F						0.436	0.062	1.000	07/07/94	01/07/95	09/16/89
				S2.0	ALL G/F						0.436	0.062	1.000	07/07/94	01/07/95	
Howell, D. C.	14714	DH	COMST	C2.0	ALL G/F						0.436	0.062	1.000	07/05/94	01/05/95	10/25/93
				CS2.0	ALL G/F						0.436	0.062	1.000	07/05/94	01/05/95	10/25/93
				S2.0	ALL G/F						0.436	0.062	1.000	07/05/94	01/05/95	10/25/93
Howell, J. L.	44065	GV	COMST	A2.0	ALL F						0.250	0.062	24.000	06/15/94	12/15/94	07/02/93
				A2.5			ALL F				0.500	0.125	24.000	06/15/94	12/15/94	07/02/93
				C2.0	ALL G/F						0.436	0.062	1.000	06/15/94	12/15/94	04/06/93
				C3.11		ALL G/F					0.436	0.125	<=4.500	06/15/94	12/15/94	07/02/93
				C2.7				ALL F			0.160	0.059	0.000	06/15/94	12/15/94	07/01/93
				C3.0	ALL G/F						0.436	0.062	1.000	06/15/94	12/15/94	01/08/93
				C3.5		ALL G/F *					0.750	0.125	24.000	06/15/94	12/15/94	07/01/93
				C6.11		ALL G/F *					0.750	0.125	24.000	06/15/94	12/15/94	07/02/93
				C6.10				ALL F			0.140	0.059	0.000	06/15/94	12/15/94	07/02/93
				C6.0	ALL G/F						0.750	0.062	24.000	06/15/94	12/15/94	07/02/93
				C8.0	ALL G/F						0.436	0.062	1.000	06/15/94	12/15/94	07/02/93
				CS2.0	ALL G/F						0.436	0.062	1.000	06/15/94	12/15/94	04/06/93
				S2.0	ALL G/F						0.436	0.062	0.250	07/13/94	01/13/95	04/06/93
				S2.11					ALL G/F		0.239	0.062	0.000	06/15/94	12/15/94	07/02/93
				S2.24		ALL G/F					0.436	0.125	<=4.500	06/15/94	12/15/94	07/02/93
Jones, R. H.	46449	ACS	COMST	C2.0	ALL G/F						0.294	0.062	0.250	06/06/94	12/06/94	01/31/87
				C3.5		ALL G/F *					0.750	0.125	24.000	06/06/94	12/06/94	06/06/93
				CS2.0	ALL G/F						0.294	0.062	0.500	06/06/94	12/06/94	
				TG2.2	ALL G/F						0.436	0.062	1.000	06/06/94	12/06/94	06/20/91
				TG2.13	ALL G/F						0.432	0.062	1.000	06/06/94	12/06/94	06/20/91
				S2.0	ALL G/F						0.294	0.062	0.250	06/06/94	12/06/94	
Jones, R. S.	47007	ADJ	COMST	C3.5		123 G/F *					0.750	0.125	24.000	06/10/94	10/10/94	06/30/89
				S2.24		ALL F					0.500	0.125	24.000	08/19/94	02/19/95	06/19/94
Jones, T. L.	47796	BS	COMST	C2.0	ALL G/F						0.436	0.062	1.000	06/23/94	12/23/94	07/08/94
				C3.0	ALL G/F						0.436	0.062	1.000	06/23/94	12/23/94	03/08/90

299425-14
TNW/Lm
10-24-94

HWMA/RCRA PART B PERMIT

FOR THE IDAHO NATIONAL LABORATORY

Volume 18 – Idaho Nuclear Technology and Engineering Center

APPENDIX 9

Debris Treatment Processes
Holdup and Collection Tanks
CPP-659/-1659 Storage
CPP-666 FDP Cell Container Storage and Slab Tank Storage
Other Miscellaneous Treatment Processes
RMWSF (CPP-1617) Container Storage Area

FDP CELL SLAB TANK CERTIFICATIONS

Effective Date: April 27, 2009

FORM WINCO-7023 (12-84)

Westinghouse Idaho Nuclear Company, Inc.

WINCO QUALITY ASSURANCE

1. Report No. P-027

PROCUREMENT ACTIVITIES REPORT

SHOWING, PLEASE FILE WITH VENDOR DATA for PO 207254

2. Report Period From 2/7 Thru 2/24/ , 19 86	3. P.O./Subcontract No. 207254
4. Supplier: Silver Engineering Works	5. Address Aurora, Colorado
6. Item Description: Slab Tank, VES-FC-184	
8. Specification: 20000-M1, 30000-W3 — Rev. 0	9. Drawing: S.E.W. DB20204 Sh. 1 and 2, DB20205 Sh. 1 of 1 — Rev.
10. Supplier Personnel Contacted: Mr. Tom Theil	11. Quality Engineer/QFR: J. M. Adam

12. Problem Areas, Tentative or Accomplished Solutions, Results — Surveillance/Inspection/Evaluation Activities:

A visit was made to Silver Engineering Works of Aurora, Colorado, to perform in-process and final inspections of one slab tank, VES-FC-184, per the specifications listed above and quality assurance planning 51299, and the quality assurance marked drawings. My contact at Silver Engineering Works (S.E.W.) was Mr. Tom Theil, Quality Manager.

1. A dimensional inspection was performed per "Q.A." marked drawings; all dimensions are acceptable except through hole for nozzle N-L, see SDR #4.

2. A visual inspection was performed on all accessible welds. They are acceptable.

3.a Ultrasonic examination of nozzle welds was not performed by virtue of SDR #3 eliminating ultrasonic examination of the nozzle welds.

3.b A review of S.E.W. test reports was made to verify that the root and final weld passes were liquid penetrant examined. This review disclosed that the root weld pass of shell plate 2R had not been liquid penetrant examined. S.E.W. issued a Suppliers Disposition Request (SDR) #002, recommending liquid penetrant examination of the 2nd pass and cover pass on the other side of the shell plate. Joe Pruitt, Project Engineer and Dan Schell, Quality Engineer were contacted per telephone and concurred with S.E.W.'s recommendation and directed this QFR to sign the SDR indicating approval. This was adhered to by this QFR. All liquid penetrant examinations are acceptable.

13. Distribution: J. Pruitt, E. Trenchak, J. Boyington, J. M. Adam, File	14. QE/QFR Signature: Adam	Date: 3-11-86
	QP Supervisor Signature: DH for J. Thistle	Date: 3/11/86
		Extension 6-3572

PROCUREMENT ACTIVITIES REPORT (Con't. Sheet)

3.c Radiographic film of pressure boundary welds was interpreted and the welds and radiographs are acceptable.

4. Critically Prevention Limit (C.P.L.) was measured prior to and after the stiffner plates were installed to verify C.P.L. This was accomplished by the ultrasonic method. All readings, before and after the stiffners were installed, are within drawing tolerances and are acceptable.

5. A hydrostatic pressure test, with the slab tank in a vertical position, was performed by S.E.W. per the specifications and the drawing. No leaks or deformation were detected. The hydrostatic pressure test is acceptable.

6. Prior to final closure of the slab tank, a free iron test was performed per ASTM A380, Section 7.2.5.1, "Water-Wetting and Drying" on the internals of the tank. The test is acceptable.

7. Final cleaning was performed by S.E.W. per the requirements of Specification 30000-M1 3.06; final cleaning is acceptable.

8. A visual inspection was performed on the name plate to verify compliance with Specification 30000-M1 2.03; the name plate is acceptable.

9. Preparation for shipment was witnessed by this QFR and is acceptable.

10. A Suppliers Quality Assurance Release, Form WINCO 7022, was issued with the following conditions: pending formal approval of SDR's 3 and 4.

Westinghouse Idaho Nuclear Company, Inc.

FORM WINCO-6157 (6-85)

SUPPLIER DATA TRANSMITTAL AND DISPOSITION

No. 207254 - 5

Contract No. 207254

For: Approval ☒ Information Only ☐

To: WESTINGHOUSE IDAHO NUCLEAR CO. INC.
1955 FREMONT AVE.
BOX 4000
IDAHO FALLS, IDAHO 83403

From: SILVER ENGINEERING WORKS.
14800 E. MONCRIEFF PL.
AURORA, CO. 80011

Document No.	Revision No.	Title or Description
VES-FC-184	0	HYDRO STATIC TEST PROCEDURE.

Contract Reference:
DOCUMENT SUBMITTAL SCHEDULE FORM 5730

Supplier Signature	Date	Title
Thomas J. [illegible]	1/7/86	MANAGER QUALITY ASSURANCE

Received at WINCO / / by Signature

Disposition:

Approved ☒ Approved W/Comment ☐ Disapproved ☐ Receipt Acknowledged ☐

Comments: Attached Sheet(s) ☐

No Comment

Action taken hereon does not relieve Seller of his responsibility to meet contractual requirements, nor does it authorize any increase in price or delay in delivery.

WINCO Procurement Signature	Date	WINCO Requester Signature
		[illegible] 1-10-86

WINCO Reviewers

				Signature
Rec'd.	1 / 8 / 86	Ret'd.	1 / 8 / 86	[illegible]
Rec'd.	1 / 8 / 86	Ret'd.	1 / 8 / 86	[illegible]
Rec'd.	1 / 8 / 86	Ret'd.	1 / 8 / 86	Bob Velardenti
Rec'd.	/ /	Ret'd.	/ /	
Rec'd.	/ /	Ret'd.	/ /	

If Seller considers that disposition hereon justifies a price increase or delivery delay, no compliance with the disposition shall be initiated.

SUBCONTRACT #207254

HYDROSTATIC TEST PROCEDURE

1. Hydro Static Testing will be accomplished in accordance with ASME Boiler and Pressure Vessel Code Section VIII Division 1, UG99.

2. Test media shall be water having a chloride content of not more than 35 PPM.

3. Nozzles are to be restored to drawing condition at the completion of the test.

4. Vessel to be pumped up to 190 psig (new condition) for a minimum of 1 hour with no detectable loss. Calibrated and certified gauges will be used to monitor any pressure drop.

5. Any detectable leaks shall be repaired, the areas cleaned and the hydrotest repreformed.

Westinghouse Idaho Nuclear Co., Inc.

Permission to proceed does not constitute acceptance or approval of design details calculations, analyses, test methods or materials developed or selected by the supplier and does not relieve supplier from full compliance with contractual obligations.

- [x] Work may proceed.
- [ ] Revise and Resubmit. Work may proceed subject to incorporation of changes noted.
- [ ] Work may not proceed. Revise and Resubmit.
- [ ] Review not required Work may proceed.

Contract No. 207254-5 Date 1-10-86

By Bob Delamont

INSPECTION
RECORD COPY

SILVER ENGINEERING WORKS, INC.

Certification of Hydro-Static Test

Name of Part SLAB TANK

S/N of Vessel 6-10-001

Date of Test 2/22/86

Test Pressure 150 PSIG

Test Held For 1 Hour

Temperature of Water AMBIENT °F.

S/N of Test Gauge SG101

Witness Howard Joe Kelley S.E.W. Inspector

Witness [illegible] Authorized Inspector

37 22 86

SILVER ENGINEERING WORKS, INC.

15PV

AURORA, COLORADO

12" $^{+0}_{-1/8}$

LOCATION OF U STAMP

5 1/4"

CERTIFIED BY

SILVER ENGINEERING WORKS INC.

AURORA, COLORADO

MAX. ALLOW. WORKING PRESSURE 100 PSIG

AT TEMPERATURE 104°F

SERIAL NO. 86-10-001 YEAR BUILT 1986

SLAB TANK. EQUIPMENT NO. VES-FC-184

SHELL MATERIAL SA 240 GR. 304L

DESIGN PRESSURE 100 PSI - AT 104°F

TEST PRESSURE 150 PSIG

WEIGHT 6700 LB.

PURCHASE ORDER NO. 207254

MATL: PL 3/16 x 5 1/4 x 12 ; SA 240 GR. 304L

MIN. LETTER SIZE 5/32"

(1) NAMEPLATE

FOR CUSTOMERS APPROVAL

JAN 10 1986

SCALE: FULL

Westinghouse Idaho Nuclear Co., Inc.

Permission to proceed does not constitute acceptance or approval of design details calculations, analyses, test methods or materials developed or specified by the supplier and does not relieve supplier from full compliance with contractual obligations.

☐ Work may proceed.
☒ Revise and Resubmit. Work may proceed subject to incorporation of changes noted.
☐ Work may not proceed.
☐ Review not required. Work may proceed.
☐ Revise and Resubmit.

Contract No. 207254-718

By [illegible] Date 1-15-86

TITLE SLAB TANK NAMEPLATE VES-FC-184	DATE 1-9-86	DRAWN mz	C
	S.O. 6-10-001	DWG AB 20207	

FILE 52

FORM U-1A MANUFACTURER'S DATA REPORT FOR PRESSURE VESSELS
(Alternative Form for Single Chamber, Completely Shop-Fabricated Vessels Only)
As Required by the Provisions of the ASME Code Rules, Section VIII, Division 1

1. Manufactured and certified by SILVER ENGINEERING WORKS INC. 14800 E. MONCRIEFF PL., AURORA, CO 80011
(Name and address of manufacturer)

2. Manufactured for WESTINGHOUSE IDAHO NUCLEAR CO. INC., BOX 4000, IDAHO FALLS, IDAHO 83403
(Name and address of purchaser)

3. Location of installation SAME
(Name and address)

4. Type HORIZ RECT TANK (Horiz. or vert., tank) | 86-10-001 (Mfgr's serial No.) | - (CRN) | DB 20204 (Drawing No.) | - (Nat'l Bd. No.) | 1986 (Year built)

5. The chemical and physical properties of all parts meet the requirements of material specifications of the ASME BOILER AND PRESSURE VESSEL CODE. The design, construction, and workmanship conform to ASME Rules, Section VIII, Division 1 _____ (Year)

to JUNE 30, 1985 (Addenda (Date)) _____ (Code Case Nos.) _____ (Special Service per UG-120(d))

6. Shell: SA 240-304L (Matl. (Spec. No., Grade)) | 0.75 (Nom. Thk (in.)) | 0.125 (Corr. Allow. (in.)) | 2½"x60" (Diam. I.D. (ft. & in.)) | 96" (Length (overall) (ft. & in.))

7. Seams: SNGL BUTT WELD (Long. (Welded, Dbl., Sngl., Lap, Butt)) | SPOT (R.T. (Spot or Full)) | - (Eff. (%)) | - (H.T. Temp. (°F)) | - (Time (hr)) | SNGL BUTT WELD (Girth (Welded, Dbl., Sngl., Lap, Butt)) | SPOT (R.T. (Spot, Partial, or Full)) | 1 (No. of Courses)

8. Heads: (a) Matl. SA 240-304L (Spec. No., Grade) (b) Matl. SA 240-304L (Spec. No., Grade)

	Location (Top, Bottom, Ends)	Minimum Thickness	Corrosion Allowance	Crown Radius	Knuckle Radius	Elliptical Ratio	Conical Apex Angle	Hemispherical Radius	Flat Diameter	Side to Pressure (Convex or Concave)
(a)	ENDS	0.75	0.125	2.5	-	-	-	-	-	CONCAVE
(b)										

If removable, bolts used (describe other fastenings) N/A
(Matl., Spec. No., Gr., Size, No.)

9. MAWP 100 psi at max. temp. 104 °F
Min. temp. (when less than -20°F) - °F. Hydro., pneu., or comb. test pressure (VERT) 150 psi

10. Nozzles, inspection and safety valve openings:

Purpose (Inlet, Outlet, Drain)	No	Diam or Size	Type	Matl	Nom Thk	Reinforcement Matl	How Attached	Location
ATMOS VERT	1	2"	150lbFLG	SA 479-304L	0.218	NONE	WELDED	TOP
PROCESS	4	1"	BUTT WELD	SA 479-304L	0.250	NONE	WELDED	TOP
PROCESS	1	3/4"	BUTT WELD	SA 479-304L	0.218	NONE	WELDED	TOP
PROCESS	1	½"	BUTT WELD	SA 479-304L	0.187	NONE	WELDED	TOP

11. Supports: Skirt - (Yes or no) Lugs 4 (No.) Legs _____ (No.) Other _____ (Describe) Attached WELDED BOTT. & TOP (Where and how)

12. Remarks: Manufacturer's Partial Data Reports properly identified and signed by Commissioned Inspectors have been furnished for the following items of the report: _____
(Name of part, item number, Mfgr's. name and identifying stamp)

CERTIFICATE OF SHOP COMPLIANCE

We certify that the statements made in this report are correct and that all details of design, material, construction, and workmanship of this vessel conform to the ASME Code for Pressure Vessels, Section VIII, Division 1. "U" Certificate of Authorization No. 5767 expires JUNE 4, 1988.

Date 2.22.86 Co. name SILVER ENGINEERING WORKS, INC. (Manufacturer) Signed Howard Dee Kelley (Representative)

CERTIFICATE OF SHOP INSPECTION

Vessel constructed by SILVER ENGINEERING WORKS, INC at AURORA, COLORADO

I, the undersigned, holding a valid commission issued by the National Board of Boiler and Pressure Vessel Inspectors and/or the State or Province of COLORADO and employed by LUMBERMENS MUTUAL CASUALTY CO.

have inspected the component described in this Manufacturer's Data Report on 2.22, 1986, and state that, to the best of my knowledge and belief, the Manufacturer has constructed this pressure vessel in accordance with ASME Code, Section VIII, Division 1. By signing this certificate neither the Inspector nor his employer makes any warranty, expressed or implied, concerning the pressure vessel described in this Manufacturer's Data Report. Furthermore, neither the Inspector nor his employer shall be liable in any manner for any personal injury or property damage or a loss of any kind arising from or connected with this inspection.

Date 2.22.86 Signed [signature] (Authorized Inspector) Commissions COLO #420 (Nat'l Board (incl. endorsements), State, Prov. and No.)

(12/82) This form (E00117) may be obtained from the Order Dept., ASME, 345 E. 47th St., New York, N.Y. 10017

FORM U-4 MANUFACTURER'S DATA REPORT SUPPLEMENTARY SHEET
As Required by the Provisions of the ASME Code Rules, Section VIII, Division 1

1. Manufactured and certified by SILVER ENGINEERING WORKS INC. 14800 E. MONCRIEFF PLACE, AURORA, CO 80011
(Name and address of manufacturer)

2. Manufactured for WESTINGHOUSE IDAHO NUCLEAR CO. INC., Box 4000, IDAHO FALLS, IDAHO 83403
(Name and address of purchaser)

3. Location of installation SAME
(Name and address)

4. Type HORIZ. RECT. TANK (Horiz., vert., tank, etc.) | 86-10-006 (Mfgr's. serial No.) | - (CRN) | DB 20204 (Dwg) | - (Nat'l. Bd. No.) | 1986 (Year built)

Data Report Item Number	Remarks							
10	PROCESS	2 ea.	1"	BUTT. WELD	SA 479-304L	0.218	NONE WELDED	BOTTOM
NOZZLES	PROCESS	4 ea.	½"	BUTT. WELD	SB 622-C22	0.187	NONE WELDED	TOP
CONT.	PROCESS	1 ea.	3/4"	BUTT. WELDED	SB 622-C22	0.218	NONE WELDED	TOP
	PROCESS	3 ea.	1"	BUTT. WELDED	SB 622-C22	0.250	NONE WELDED	TOP

We ... Idaho Nuclear Co., Inc.

Permission to proceed does not constitute acceptance of responsibility for design details, calculations, analyses, test methods or materials developed or used by the supplier and does not relieve supplier from full compliance with contractual obligations

- [x] Work may proceed.
- [ ] Revise and Resubmit. Work may proceed subject to incorporation of changes noted
- [ ] Work may not proceed. Revise and Resubmit.
- [ ] Review not required. Work may proceed.

Contract No. 207254

By J. T. Pouitt / VC-5 Date 3/7/86

Date Feb 22, 1986 Co. name SILVER ENGINEERING WORKS, INC (Manufacturer) Signed [signature] (Representative)

Date 2-22-86 Signed [signature] (Authorized Inspector) Commissions CO 420 (Nat'l. Board (incl. endorsements), State, Prov., and No.)

(12/82) This form (E00118) is available from the Order Dept., ASME, 345 E. 47 St., New York, N.Y. 10017

INSPECTION RECORD COPY

ORIGINAL WDB LOST

Westinghouse Idaho Nuclear Company, Inc.

QUALITY ENGINEERING INSPECTION PLANNING

FORM WINCO-7071 (6-85)

Plan No. 51299 Rev. 0

1. Source ☒ 2. Receiving ☐ 3. Construction ☐ 4. Production ☐ 5. Quality Level I

6. Item/Title/Description: SLAB TANK UES-FC-184

7. Project FDP MODS 8. Dwg./Spec. No. 30000-M1 Rev 3, 30000-W3, 30442-WS-S43 Rev. —

9. P.O. ☒ Subcontract ☐ MJR ☐ Job ☐ EA ☐ No. 207254 Rev. 0

10. Prepared By W.J. BOYINGTON Date 2-4-86 11. Reviewed By WDB Date 2-4-86

12. Approved By J.I. PRUITT Date

13. Char. No.	14. Inspection Characteristic	15. Inspection Status	16. General Remarks
1	Perform a dimensional inspection Per "QA" Marked dwg. Tolerances per dwg and Spec 30000 M-1 fig 2. Note: Nozzles shall not be located in any seam without prior written approval	WDB 2-26-86 SBL #4	See report P027 by D. Adam WDB
2	Perform a visual inspection of all accessible welds. Reject welds that have not been properly contoured/finished for the applicable inspection method. Recut excessive undercut and excessive reinforcement. Reject fillet welds that are under size or underrun	WDB 2-26-86	See report P.027 by D. Adam WDB
3	NON-DESTRUCTIVE EXAMINATION a) WITNESS U.T. of NOZZLE WELDS	SBL #3 2-26-86	See Report P 027 WDB by D. Adam

INSPECTION RECORD COPY

17. Inspections Reviewed/Completed: for J.L. Trujillo 2-26-86 — Insp. Supvr. / Date

18. Final Quality Engineering Review/Approval: 2-26-86 — Quality Engineer / Date

INSPECTION RECORD

QUALITY ENGINEERING INSPECTION PLANNING
(Continuation Sheet)

FORM WINCO-7071B (6-85)

Plan No. 51299

13. Char. No.	14. Inspection Characteristic	15. Inspection Status	16. General Remarks
3.	Non-Destructive Examination b) L. P. Verify by review of test reports that the root and final passes of all pressure retaining welds have been inspected and accepted by the L.P. Method. c) R. T. Interpret radiographic film per ASME SEC VIII DIV I Par UW-51 Punch film to indicate accept-reject of film & welds.	WFF 86 SOR #2 WFF 86 2-26	See report P-027 by J Adam WFF See report P-027 by J Adam WFF
4	INSPECTION HOLD POINT WITNESS: CPL - dimension inspection	WFF 86 2-26	See report P-027 by J Adam WFF
5.	INSPECTION HOLD POINT WITNESS: FIT-UP and welding final CLOSURE	WFF 86 2-26	See report P-027 by J Adam WFF

INSPECTION RECORD COPY

QUALITY ENGINEERING INSPECTION PLANNING
(Continuation Sheet)

FORM WINCO-7071B (6-85)

Plan No. 51299

13. Char. No.	14. Inspection Characteristic	15. Inspection Status	16. General Remarks
6	INSPECT NOZZLES FOR CORRECT LENGTH, SIZE, SCHEDULE AND ORIENTATION. VERIFY I.D. OF NOZZLE IS ALIGNED WITH THROUGH HOLE	29 2-26	See Report P-027 by J. Adam
7.	WITNESS HYDROSTATIC TEST PER THE VENDOR'S PROJECT APPROVED PROCEDURE. SPEC 30000 M1 3.05 D	2-26	See Report P-027 by J. Adam
8	WITNESS FREE IRON TEST SPEC 30000 M1 3.05 E	29 2-26	See Report P-027 by J. Adam
9	WITNESS FINAL CLEANING SPEC 30000 M1 3.06	29 2-26	See Report P-027 by J. Adam
10.	INSPECT NAME PLATE SPEC 30000 M1 2.03 VENDOR'S PROJECT APPROVED DWGS	2-26	See 7022 dated 2-22-86 by J. Adam
11.	WITNESS PREPERATION FOR SHIPMENT OR REVIEW REQUIREMENTS WITH SUPPLIER REP.	2-26	See Report P-027 by J. Adam
12	ISSUE FORM WINCO 7022 SUPPLIER QA RELEASE	29 2-26	See Report P-027 by J. Adam

6.5

INEL

Idaho National Engineering Laboratory

RECEIVED
APR 22 1993

CLP-10-93

From : C. L. Porter
Phone : 6-3101/MS 5119
Date : April 20, 1993
Subject: FAST Integrity Assessment

To : S. A. Birrer
J. E. Hevlow
Richard Lo - ETAS Corporation (2 attachments)

cc: S. A. Drewes*
J. E. Kaylor*
S. A. Heath - ETAS Corporation*
J. S. Kilburn - ETAS Corporation*

* - w/o Attachments

This letter transmits your copy of the completed documents associated with the certification of the integrity of the FAST Facility. This satisfies the requirement of 40 CFR 265.193 and 265.191 for an annual integrity assessment.

C. Robison for CLP

C. L. Porter, Project Manager
Environmental Compliance Projects

/mh

Attachments

SECONDARY CONTAINMENT ASSESSMENT

FOR THE

FLUORINEL AND FUEL STORAGE FACILITY (FAST)

APRIL 1993

PREPARED BY: _____ 4-20-93

C. L. PORTER, SENIOR ENGINEER — DATE
ENVIRONMENTAL COMPLIANCE PROJECTS

WESTINGHOUSE IDAHO NUCLEAR CORPORATION
CO-OPERATOR OF THE IDAHO CHEMICAL PROCESSING PLANT
FOR THE
U. S. DEPARTMENT OF ENERGY
IDAHO FALLS, IDAHO

ETAS CORPORATION **ETAS**

Hazardous Waste Engineering and Groundwater Remediation

INDEPENDENT, QUALIFIED, REGISTERED PROFESSIONAL ENGINEER ENDORSEMENT OF THE SECONDARY CONTAINMENT ASSESSMENT FOR THE FLUORINEL AND FUEL STORAGE FACILITY (FAST)

IDAHO CHEMICAL PROCESSING PLANT
IDAHO NATIONAL ENGINEERING LABORATORY
IDAHO FALLS, IDAHO

Based on review of this document, entitled "Secondary Containment Assessment for the Fluorinel and Fuel Storage Facility (FAST)", April 1993, prepared by C.L. Porter of WINCO, ETAS Corporation concurs with WINCO's conclusion that secondary containment, where present, is adequate.

Stanley A. Heath 4/20/93

Stanley A. Heath, ETAS Corporation **Date**
Project Manager

James S. Kilburn, P.E. 4/20/93

James S. Kilburn, ETAS Corporation **Date**
Idaho P. E. Registration #4504

REGISTERED PROFESSIONAL ENGINEER 4504 4/20/93 STATE OF IDAHO JAMES STEWART KILBURN

8828 North Stemmons Freeway, Suite 413, Dallas, Texas 75247-3726
Tel (214) 630-6610 Fax (214) 630-7494

SECONDARY CONTAINMENT ASSESSMENT
FOR THE
FLUORINEL AND FUEL STORAGE FACILITY (FAST)

INTRODUCTION

The Resource Conservation and Recovery Act (RCRA) per 40 CFR 265.191, requires an integrity assessment for existing hazardous waste tank systems that do not have secondary containment that meet the requirements of 40 CFR 265.193. The integrity assessment is limited to those facilities which are less than 15 years old and do not have secondary containment. The purpose of this secondary containment assessment is to define the boundaries of the hazardous waste system associated with FAST and determine which portions have secondary containment meeting the regulatory standards. This will establish the scope for the subsequent integrity assessment.

FACILITY DESCRIPTION

The Fluorinel and Fuel Storage Facility (FAST) is located in building CPP-666 at the Idaho Chemical Processing Plant (ICPP) is comprised of two separate operating areas: the Fuel Storage Area (FSA) and the Fluorinel Dissolution Process (FDP) area (see Figure 1).

The FDP area of FAST consists of facilities for converting a variety of spent nuclear reactor fuel elements into a liquid-feed solution for subsequent uranium recovery at other ICPP facilities. However, due to the 1992 mission change, spent nuclear fuel is no longer dissolved for uranium recovery at the ICPP.

The FSA of FAST provides facilities for receiving, preparing for storage, storing, transferring, and preparing for processing various fuels received at the ICPP.

FAST, along with its associated tankage and container storage has interim RCRA status. However, the tank systems associated with FDP are being closed under interim status and will be operated as <90 day generator storage units (40 CFR 262.34). The operation of such units requires compliance with the substantive portions of subpart J of 40 CFR part 265. To allow the greatest flexibility for future use of the facility those non-permitted tank systems will be included in this secondary containment assessment. As reflected by the current draft of the RCRA Part B Application for FAST, the only permitted unit within FAST is container storage in the FDP Cell. Since container storage is not subject to the subpart J requirements it will not be included in the scope of this assessment.

WASTE SYSTEM DESCRIPTIONS

<u>FSA Waste Systems</u>-The waste systems associated with FSA are the result of water treatment for the basin water. Two vessels (VES-FT-134 and VES-FT-135) and two sumps (chemical and service waste sumps) are used to collect waste

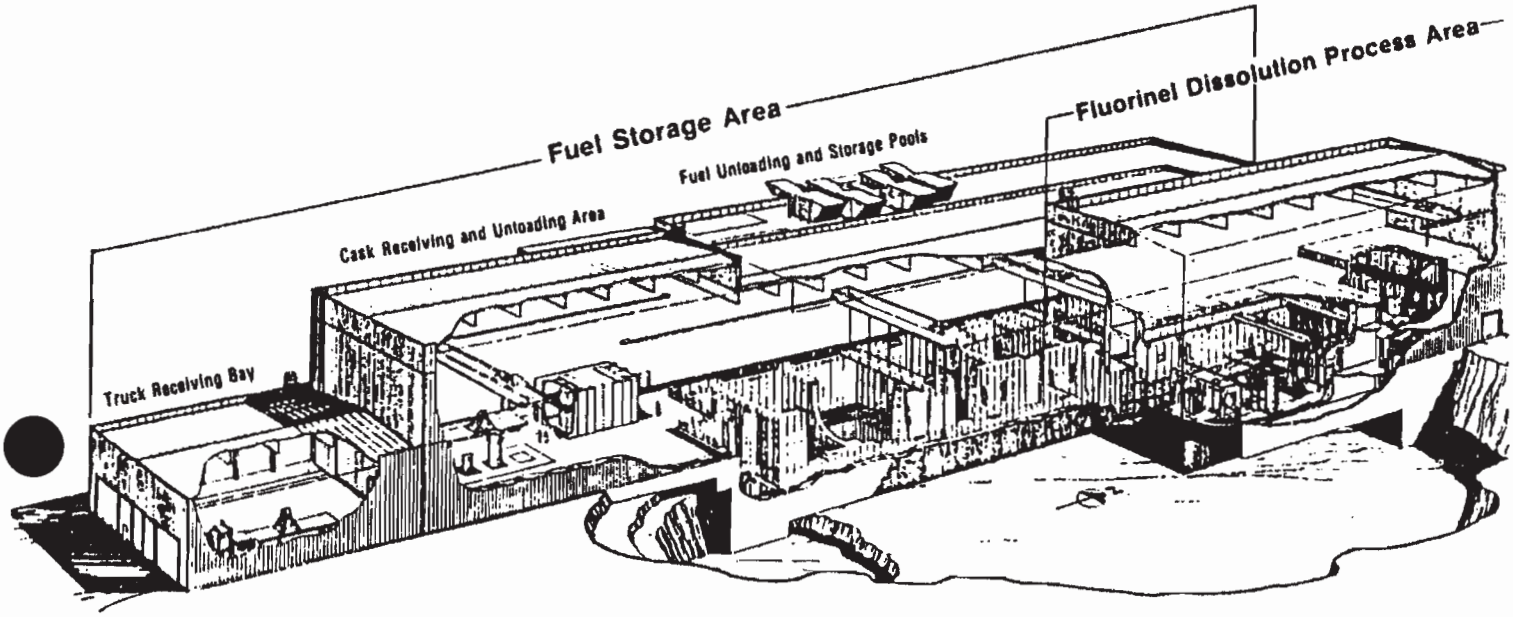

FLUORINEL DISSOLUTION PROCESS AND FUEL STORAGE FACILITY (cutaway view)

Figure 1

solutions from the treatment activities. Elementary neutralization is performed in the vessels and the sumps to render the acid and caustic nonhazardous.[1] EPA has indicated that all storage and conveyance systems that are elementary neutralization units or are ancillary equipment to an elementary neutralization unit are exempted from RCRA subtitle C regulation.[2] Therefore further consideration of FSA waste systems from a secondary containment standpoint is not required.

FDP Waste Systems-Liquid waste can either be generated in-cell or out-of-cell. In-cell process and decontamination liquid waste is collected in the process vessels or the FDP cell sump collection tank (VES-FC-184, Slab Tank). Liquid waste from FDP operating floor drains, chemical receiving, storage, and makeup area drains, and utility sinks is collected in two waste collection tanks (VES-FA-141, -142) located outside the FDP cell in the corridor at the -31 foot elevation.

Occasionally, waste solutions are generated in the FDP cell, primarily from decontamination activities. Equipment rinse solution is collected on the stainless steel lined cell floor. The floor is sloped to a small diameter, stainless steel sump which is equipped with a liquid level detection instrument. The contents of the sump are transferred to either the slab tank or the product transfer vessel (PTV), which are both located within the stainless steel lined cell. From the in-cell vessels the waste solutions are transferred to the appropriate waste disposal facility: the process equipment waste evaporator or directly to the waste tank farm.

Each chemical makeup tank is provided with an overflow line to direct the flow of any excess solution added to the tank. The overflow lines of the tanks and the drain lines from the containment areas beneath the tanks are routed to either the fluoride collection tank (VES-FA-141) or the non-fluoride collection tank (VES-FA-142). Each of these tanks is located in a stainless steel lined containment area which is equipped with a liquid level detector. Solutions from the tanks can either be transferred to the process equipment waste evaporator, the tank farm, or drummed out for off-site disposal.

SECONDARY CONTAINMENT STANDARDS

Secondary containment systems must meet all the requirements of 40 CFR 265.193. These include:

1) General Design - The secondary containment must be designed, installed, and operated to prevent any migration of wastes or accumulated liquid out of the system to the soil, groundwater, or surface water [40 CFR 265.193 (b)(1)]. Any accumulated liquid wastes resulting from leaks, spills, or precipitation must be drained and removed within 24 hours [40 CFR 265.193 (c)(4)].

2) Type of Secondary Containment - Secondary containment for tanks must include, at a minimum, a liner external to the tank, a vault, a double-walled tank, or an approved equivalent device [40 CFR 265.193 (d)]. Examples of full secondary containment for ancillary equipment are a trench, jacketing, or double-walled piping [40 CFR 265.193 (f)].

3) Design Capacity - Secondary containment for tanks must be designed with the capacity to contain all of the potentially released liquid should a tank (or pipe) fail [40 CFR 265.193 (e)(1)(i), (e)(2)(i), and (e)(3)(i)].

4) Runoff Diversion/Moisture Barrier - The secondary containment must be designed to prevent runon or infiltration of precipitation into the secondary containment and must be provided with an exterior moisture barrier to prevent moisture migration into the secondary containment [40 CFR 265.193 (e)(1)(ii), (e)(2)(ii), and (e)(2)(vi)].

5) Foundation - The secondary containment must be supported by an adequate foundation [40 CFR 265.193 (c)(2)].

6) Liner - The secondary containment must be constructed of or lined with materials that are compatible with the waste(s) [40 CFR 265.193 (c)(1)]. The liner must be free of cracks or gaps [40 CFR 265.193 (e)(1)(iii)] and prevent migration of waste into the concrete [40 CFR 265.193 (e)(2)(iv)].

7) Leak Detection - Leak detection systems must be able to detect the failure of either the primary or the secondary containment structure or any release of hazardous waste or accumulated liquid in the secondary containment system within 24 hours [40 CFR 265.193 (b)(2) and (c)(3)].

8) Spill Removal - Secondary containment systems must be designed or operated to remove accumulated liquids from the system within 24 hours [40 CFR 265.193(c)(4)].

SECONDARY CONTAINMENT ASSESSMENT

In 1989 the ICPP conducted an assessment of the FDP facility to determine compliance status with RCRA requirements.[3] Among other requirements the assessment addressed the secondary containment requirements of 40 CFR 265.193. The assessment concluded that the requirements for secondary containment were met for all areas except the chemical receiving, storage, and makeup area drains which pass through the soil before they enter the -31 level. A discussion of the salient aspects of the secondary containment requirements follows:

Types of secondary containment - The process cell at FDP is equipped with leaktight 304L stainless steel liner systems which slope to the cell sump and which serve as secondary containment to the tanks within. The stainless steel plates conform to ASTM A240. Stainless steel angles, bars and shapes conform to ASTM A276. All liner welds were examined for leak tightness by the vacuum box method in accordance with Article 1 of Section V of the ASME Code. As described previously the sump receives some wastes directly and hence also functions as primary containment. Since the sump itself does not have secondary containment it will need to be included in the integrity assessment.

The fluoride and non-fluoride waste tanks are located inside a curbed, 304L

stainless steel lined drip pan with a capacity greater than the capacity of the largest tank.

Most of the ancillary equipment and piping for the tank systems at FAST are contained in the same cells or rooms as the waste tanks. Waste lines outside the cells are generally doubly encased in stainless steel pipe. Those piping systems that are not located within secondary containment or double encasement systems are visually inspected daily. One exception to the above are the waste drainlines from the chemical receiving, storage and preparation rooms. Some of these lines pass singly contained through the soil between where they exit the floor of the area and penetrate the wall of the main building in the -31 ft. level. Another exception is a short section of two waste transfer lines within the Product/Transfer Vault, an unlined concrete vault where the lines tie into stainless steel encased transfer lines.

Design Capacity - The secondary containment systems at FAST are designed to contain the released liquid should the tank or piping system fail. The Slab Tank, the PTV, and the ancillary piping located within the FDP Cell are but a fraction of the volume of the cell. The capacity of the lined drippan for the fluoride and non-fluoride tanks is greater than the capacity of the largest tank.

Runoff diversion/moisture barrier - Exterior concrete surfaces below grade were coated with a hot-applied bituminous dampproofing.[4] A 6-mil polyethylene vapor barrier was installed beneath concrete slabs on grade. All construction joints in external walls and in floor slabs have waterstops.[5] Flood protection for all the FAST equipment located below grade is provided by the natural arid features of the INEL, a flood diversion system for the Big Lost River, and the facility being designed to withstand the 4916.6 ft standard datum flood (10,000 year flood) without allowing water to enter the facility.[6]

Foundation - Support for the liner systems is provided by concrete floor slabs and foundations. The facility was designed to meet the requirements of the 1976 edition of the Uniform Building Code. In addition, the building was designed to withstand the effects of the design basis natural phenomena specified in the project design criteria.[4] The Design Basis Earthquake (DBE) was defined to have a resultant vertical bedrock acceleration of 0.16g and horizontal acceleration of 0.24g.

Liner compatibility - Materials of construction were selected following a comprehensive materials testing program that included experimentally determining corrosion rates of the various materials using simulated process solutions[7,8,9,10]. Use of hydrofluoric acid (HF) in the process resulted in extensive use of Hastelloy materials. Although the liners are 304L stainless steel, which is not as resistent to HF as Hastelloy materials, the corrosion rate is such that there is sufficient time to respond to any breach of the primary before the secondary containment is breached. The secondary containment for piping passing through occupied areas is provided by the respective building rooms. The floors and walls of the rooms are coated with polyamide-cured catalyzed epoxy (such as Amercoat 66).[11] The same principle

applies in those areas; the containment material is sufficiently resistent to any possible waste solution leakage that actions can be taken before breach of the secondary containment occurs.

Leak detection and spill removal - Leak detection is accomplished in one of two ways; 1) by visual inspection in normally occupied areas and 2) by collection in instrumented sumps for non-accessible areas. The instrumentation is a bubbler probe leak detection system with a high level alarm. Spill removal is accomplished by jetting accumulated liquids from collection sumps/vessels.

CONCLUSION

Based on the above information, the only portions of FAST that do not have secondary containment meeting the requirements of 40 CFR 265.193 are 1) the underground sections of the drainlines originating in the chemical receiving, storage, and preparation areas, 2) the sections of the waste transfer lines within the Product/Transfer Vault that are not doubly contained, and 3) the sump of the FDP Cell. Therefore, the scope of the integrity assessment for FAST will be limited to those areas.

REFERENCES

1. Fuel Handling and Storage Assessment, LFE-204-89, dated Sep 1989.

2. US EPA, Hazardous Waste Management System; Standards for Hazardous Waste Storage and Treatment Tank Systems, Federal Register Vol. 53 No. 171, September 2, 1988.

3. Fluorinel Dissolution Process Assessment, LFE-229-89, September 12, 1989.

4. Technical Specifications for Fluorinel Dissolution Process and Metal-Clad Fuels Storage Facility, Sub-division A2, Section 1, "Bituminous Dampproofing", Ralph M. Parsons Company, Rev. 1, 12/18/80.

5. Technical Specification S1.3 "Cast-in-place Concrete", Ralph M. Parsons Company, Rev. 2, 10/31/81.

6. Design Criteria for Fluorinel Process, E.H. Smith, editor, Exxon Nuclear Idaho Company, Inc., ENI-103, Rev. 5, Nov. 5, 1979.

7. R.E. Mizia, letter to J.D. Christian, "Results of Fluorinel Cyclic Corrosion Test", dated December 9, 1983.

8. R.E. Mizia, letter REM-17-84 to J.D. Christian, "Corrosion Test Results of Stainless Dissolution at Varying Temperatures", dated July 5, 1984.

9. W.J. Dirk, letter Dirk-18-84 to R.E. Mizia, "Results for Corrosion Evaluation of Hastelloy C-4 in Fluorinel Complexer Rinse Solution", dated August 3, 1984.

10. W.J. Dirk, letter Dirk-27-84 to R.E. Mizia, "Results of Immersion Corrosion Testing of Type 304L Stainless Steel in FAST Process Transfer Vessel (PTV) Solutions with Additional Chloride", dated September 10, 1984.

11. Technical Specification A4-5 "Special Coatings", Ralph M. Parsons Company, Rev. 11, 9/26/83.

INTEGRITY ASSESSMENT PLAN

FOR THE

FLUORINEL AND FUEL STORAGE FACILITY (FAST)

APRIL 1993

PREPARED BY: _____ 4-20-93
C. L. PORTER, SENIOR ENGINEER DATE
ENVIRONMENTAL COMPLIANCE PROJECTS

WESTINGHOUSE IDAHO NUCLEAR CORPORATION
CO-OPERATOR OF THE IDAHO CHEMICAL PROCESSING PLANT
FOR THE
U. S. DEPARTMENT OF ENERGY
IDAHO FALLS, IDAHO

ETAS CORPORATION **ETAS**

Hazardous Waste Engineering and Groundwater Remediation

INDEPENDENT, QUALIFIED,
REGISTERED PROFESSIONAL ENGINEER
APPROVAL OF THE
INTEGRITY ASSESSMENT PLAN
FOR THE
FLUORINEL AND FUEL STORAGE FACILITY (FAST)

IDAHO CHEMICAL PROCESSING PLANT
IDAHO NATIONAL ENGINEERING LABORATORY
IDAHO FALLS, IDAHO

I have reviewed this document and believe the proposed inspections, tests and analyses described herein to be sufficient for assessment of the integrity of the Fluorinel and Fuel Storage Facility (Fast). I understand the integrity assessment will be performed in accordance with this Integrity Assessment Plan, and that as the Independent, Qualified, Registered Professional Engineer (IQRPE), I will be asked to certify the report generated by this assessment. I also understand that the inspections, tests, and analyses described herein are based on currently available information and are subject to change during the performance of this assessment. As the IQRPE, I will exercise sound engineering principles in authorizing required changes to these inspections, tests, and analyses.

Stanley A. Heath — 4/20/93

Stanley A. Heath, ETAS Corporation — **Date**
Project Manager

James S. Kilburn, P.E. — 4/20/93

James S. Kilburn, ETAS Corporation — **Date**
Idaho P. E. Registration #4504

REGISTERED PROFESSIONAL ENGINEER
4/20/93
STATE OF IDAHO
JAMES STEWART KIL

8828 North Stemmons Freeway, Suite 413, Dallas, Texas 75247-3726
Tel (214) 630-6610 Fax (214) 630-7494

INTEGRITY ASSESSMENT PLAN
FOR THE
FLUORINEL AND FUEL STORAGE FACILITY (FAST)

INTRODUCTION

The Westinghouse Idaho Nuclear Corporation (WINCO) operates the Idaho Chemical Processing Plant (ICPP) for the United States Department of Energy (DOE). Various facilities at the ICPP handle hazardous waste as defined by the Resource Conservation and Recovery Act (RCRA). RCRA requires an integrity assessment per 40 CFR 265.191 for existing facilities which are less than 15 years old and do not have secondary containment that meets the requirements of 40 CFR 265.193. One such facility is the Fluorinel and Fuel Storage Facility (FAST).

SCOPE

The scope of this Integrity Assessment Plan (IAP) is to identify the strategy used to evaluate the integrity of the hazardous ancillary piping and equipment associated with FAST. Only those portions of the system which do not have secondary containment, as documented in the Secondary Containment Assessment for the Fluorinel and Fuel Storage Facility[1], will be included in the integrity assessment. This IAP describes the inspections, tests, rationale, and criteria for the integrity evaluation of the subject ancillary equipment.

SYSTEM DESCRIPTION

As originally designed the Fluorinel and Fuel Storage Facility (FAST) served two distinct functions at the ICPP. The Fuel Storage Area (FSA) provides facilities for receiving, preparing for storage, storing, transferring, and preparing for processing spent nuclear fuels from a variety of sources. This area is currently operating. The second function provided by FAST, the Fluorinel Dissolution Process (FDP), has not been actively operated since 1988. The FDP facilities were used to convert various spent nuclear reactor elements into a liquid feed solution for subsequent uranium recovery at other ICPP facilities.

The hazardous waste solutions generated in the FSA are only hazardous due to corrosivity. Therefore the waste solutions are treated in elementary neutralization units and are not subject to hazardous waste tank regulations.

To allow for future alternative usage of the FDP facilities the hazardous waste tank systems are being operated as <90-day generator accumulation areas. The wastes originate from various drippans and drains located throughout the facility. The collection points are two tanks in a normally occupied area and two waste tanks with an intermediate sump located within the dissolution cell. As concluded in Reference 1, the portions of the tank systems that do not have secondary containment are 1) the underground sections of the drainlines originating in the chemical receiving, storage, abd preparation areas, 2) the sections of two waste transfer lines within the Product/Transfer Vault that

are not doubly contained, and 3) the sump of the FDP cell. The scope of this Integrity Assessment Plan (IAP) is therefore limited to those portions of the waste systems.

INTEGRITY ASSESSMENT APPROACH

The integrity assessment required by RCRA specifies five areas that must be considered:

1. design standards
2. hazardous characteristics of the waste
3. corrosion protection measures
4. documented age of the tank system
5. results of a leak test, internal inspection or other integrity examination.

The integrity assessment for FAST must determine if the underground drain piping and sump have sufficient structural strength and compatibility with the waste to ensure that they will not collapse, rupture, or fail under normal operating conditions. This section describes how each of the areas will be considered in the overall integrity assessment.

DESIGN STANDARDS

The design codes and standards to which FAST was built are well documented in the project documents and drawings. The integrity assessment will summarize the results of a review of the project documentation relative to the design codes and standards.

HAZARDOUS CHARACTERISTICS OF WASTE

The original process flowsheets guided the materials selection for the design. Future alternative uses must be enveloped by the original design basis. Additionally, since the waste tank systems were included on the original RCRA Part A permit various RCRA documents cover the hazardous characteristics of the waste.[2,3] These sources of information will be used to address the waste characteristics and the compatibility of the materials of construction.

CORROSION PROTECTION MEASURES

Corrosion protection of the subject ancillary equipment is limited to the selection of corrosion resistant materials of construction, consequently the integrity assessment document will address this area as part of the materials compatibility discussion.

DOCUMENTED AGE OF TANK

The age of the system is known and documented, both in the original project documentation and in subsequent correspondence from the Environmental Department of WINCO. These documents will be utilized to cover this aspect of the integrity assessment.

INTEGRITY EXAMINATIONS

The FDP ancillary piping under consideration are portions of primarily gravity drain systems and as such have limited capabilities for isolation. Consequently, performing a leak test on selected portions of the systems is not possible without adding numerous isolation valves. Performing a leak test of the subject piping by filling the entire system would generate large quantities of mixed waste unnecessarily and would be at odds with waste minimization efforts. Since FAST is a relatively new facility (8-1/4 years old) with a known usage history, it is well suited for an integrity evaluation other than a leak test.

For the piping this integrity evaluation is based on three assumptions. First, any threat to underground piping is internal, not external, i.e., corrosion of the piping will be more severe from the internal contents than from the exposure to the underground environment. Second, that process knowledge is sufficient to determine "worst case" portions of the respective systems. As long as the "worst case" areas are intact the other piping within the system would be intact. Third, that corrosion of the subject systems is uniform.

The first assumption is supported by a knowledge of corrosion mechanisms and the nature of the internal solutions vs. the external environment. The assumption was validated during the integrity assessment of the Remote Analytical Laboratory (RAL), a facility with underground stainless steel drainlines built during the same time period as FAST. The validity of the second assumption will be confirmed as the process knowledge is compared between different lines. If a clear "worst case" section cannot be determined then a statistically determined sampling of piping will be examined for integrity. The third assumption is based on the fact that the drain systems are not subject to turbulent fluid flow conditions with abrasive particles. Therefore erosion at elbows and bends is not a concern. The primary mechanism of corrosion is attack of the pipe wall by the internal fluid. The result of that mechanism is uniform corrosion.

Ultrasonic wall thickness measurements will be taken at locations determined by the "worst case" analysis. The thickness measurements will be compared against original design wall thickness to determine integrity.

The integrity of the dissolution cell sump will be determined by a standing water leak test. Since the sump is in a remote, high radiation area, the leak test is the simplest and most direct way to evaluate integrity. The sump is instrumented with a level detector. A level will be established and recorded. Once the test begins all sources of input will be secured as well as transfers from the sump. As long as the decline over a two week period does not exceed the established evaporation rate the test will be considered successful.

QUALITY ASSURANCE

The ultrasonic testing will be performed by qualified personnel from the Quality and Performance Assurance Department (QA) of WINCO. The leak test of the in-cell sump will be conducted by trained and qualified operators of the

process equipment. The level of quality of the historical data is governed by the formal quality program plan of the project that designed and built the facility, and the quality controls on the operation of the process.

REFERENCES

1. C.L.Porter, "Secondary Containment Assessment for the Fluorinel and Fuel Storage Facility (FAST), WINCO, April 1993.

2. RCRA Interim Status Waste Analysis Plan for the FAST Facility, WAP-FAST, Rev 0, October 1990.

3. Draft RCRA Closure Plan for the Fluorinel Dissolution Process Waste Tanks at the Idaho National Engineering Laboratory, CLO-FDPW, Rev 0, September 1992.

INTEGRITY ASSESSMENT DOCUMENT

FOR THE

FLUORINEL AND FUEL STORAGE FACILITY (FAST)

APRIL 1993

PREPARED BY: _____ 4-20-93
C. L. PORTER, SENIOR ENGINEER DATE
ENVIRONMENTAL COMPLIANCE PROJECTS

WESTINGHOUSE IDAHO NUCLEAR CORPORATION
CO-OPERATOR OF THE IDAHO CHEMICAL PROCESSING PLANT
FOR THE
U. S. DEPARTMENT OF ENERGY
IDAHO FALLS, IDAHO

ETAS CORPORATION **ETAS**

Hazardous Waste Engineering and Groundwater Remediation

INTEGRITY ASSESSMENT CERTIFICATION FOR THE FLUORINEL AND FUEL STORAGE FACILITY (FAST)

IDAHO CHEMICAL PROCESSING PLANT
IDAHO NATIONAL ENGINEERING LABORATORY
IDAHO FALLS, IDAHO

The attached report entitled "Integrity Assessment Document for the Fluorinel and Fuel Storage Facility (FAST)" dated April 1993, prepared by C.L. Porter of WINCO, serves as the basis for this certification, which is required under 40 CFR 265.193 (i) (2) and 40 CFR 265.191.

The certification provided herein by ETAS Corporation is limited to the integrity assessment of the following lines and equipment in the FAST area of the ICPP: 1) the underground sections of the hazardous waste lines draining to tanks VES-FA-141 and VES-FA-142; 2) the sections of the waste transfer lines within the Product/Transfer Vault that are not doubly contained; and 3) the sump of the FDP Cell. ETAS concurs with WINCO's conclusion described in the certification document based on information obtained by them.

Pursuant to the requirements of Subpart J of 40 CFR Part 265, the following statements are made:

"The assessment presented in the attached report indicates that the underground sections of the hazardous waste lines draining to tanks VES-FA-141 and VES-FA-142, the sections of the waste transfer lines within the Product/Transfer Vault that are not doubly contained, and the sump of the FDP Cell are adequately designed and have sufficient structural strength and compatibility with the waste to be transferred to ensure they will not collapse, rupture, or fail.

"I certify under penalty of law that this document and all attachments were prepared under my direction or supervision in accordance with a system designed to assure that qualified personnel properly gather and evaluate the information submitted. Based on my inquiry of the person or persons who manage the system, or those persons directly responsible for gathering the information, the information submitted is, to the best of my knowledge and belief, true, accurate, and complete. I am aware that there are significant penalties for submitting false information, including the possibility of fine and imprisonment for knowing violations."

Stanley A. Heath 4/20/93

Stanley A. Heath, ETAS Corporation **Date**
Project Manager

James S. Kilburn, P.E. 4/20/93

James S. Kilburn, ETAS Corporation **Date**
Idaho P.E. Registration #4504

REGISTERED PROFESSIONAL ENGINEER 4504 STATE OF IDAHO JAMES STEWART KILBURN

8828 North Stemmons Freeway, Suite 413, Dallas, Texas 75247-3726
Tel (214) 630-6610 Fax (214) 630-7494

INTEGRITY ASSESSMENT DOCUMENT
FOR THE
FLUORINEL AND FUEL STORAGE FACILITY (FAST)

INTRODUCTION

The Westinghouse Idaho Nuclear Corporation (WINCO) operates the Idaho Chemical Processing Plant (ICPP) for the United States Department of Energy (DOE). Various facilities at the ICPP handle hazardous waste as defined by the Resource Conservation and Recovery Act (RCRA). RCRA requires an Integrity Assessment per 40 CFR 265.191 for existing facilities that do not have secondary containment meeting the requirements of 40 CFR 265.193. A Secondary Containment Assessment[1] was performed for FAST to determine those portions of the hazardous waste systems of the facility that required an Integrity Assessment. An Integrity Assessment Plan[2] was formulated for the evaluation of the integrity of the ancillary piping and equipment identified in Reference 1. The results of the testing and evaluation are reported in this document.

SCOPE

Reference 1 concluded that the only portions of the FAST hazardous waste systems that do not have secondary containment meeting the requirements of 40 CFR 265.193 are 1) the underground sections of the drainlines originating in the chemical receiving, storage, and preparation areas, 2) the sections of the waste transfer lines within the Product/Transfer Vault that are not doubly contained, and 3) the sump of the Dissolution Cell. Therefore, the scope of this Integrity Assessment is limited to those three areas.

SYSTEM DESCRIPTION

GENERAL

FAST is located in building CPP-666. The facility is comprised of two separate operating areas, the Fuel Storage Area (FSA) and the Fuel Dissolution Process (FDP) area. The FSA portion is in active operation while the FDP portion of the facility is inactive due to the DOE change in mission. The original RCRA interim status documentation for FAST included two hazardous waste tank systems associated with FSA and three systems associated with FDP. The tank systems associated with FSA have subsequently been reclassified as elementary neutralization units and therefore are not subject to the hazardous waste tank regulations, subpart J of 40 CFR 264 and 265. The hazardous waste tank systems within the FDP area are currently awaiting approval of the RCRA closure plan. Following RCRA closure the units will be operated as <90-day generator accumulation areas. To allow for flexibility in potential alternate applications for the FDP area, the liquid waste systems, although not included in the RCRA Part B Application, are included in the scope of this integrity assessment.

The following discussion will focus on the FDP hazardous liquid waste systems. The operations described, although not currently performed at the facility, envelope any potential uses of the facility, relative to this integrity assessment.

FDP PROCESS

The FDP is a batch process which converts spent nuclear reactor fuel elements into a liquid feed solution for subsequent uranium recovery at other ICPP facilities. Typical processing steps which take place within the shielded dissolution cell are summarized as follows:

1. An irradiated Fuel Handling Unit (FHU - one or more pieces of fuel assembled in a fuel handling fixture) is transferred to the FDP cell from FSA; fuel may be placed in an interim storage rack before it is charged.

2. The fuel may be measured for uranium content in the delayed neutron interrogator.

3. The FHU is charged to a dissolver.

4. The fuel is dissolved in the dissolvers with hydrofluoric (HF) acid. Toward the end of the dissolution process, nitric acid is added for final dissolution in complexers. Aluminum nitrate is added to complex free-fluoride ions and to prepare the product for subsequent uranium recovery.

5. After dissolution, all but a small heel of solution is transferred from the dissolver to the complexer. The dissolver is then flushed to the complexer with cadmium containing water for criticality safety. The solution is adjusted for nitrate with additional nitric acid and sampled for uranium and free HF. If necessary, the solution is adjusted for free HF to maintain corrosion control and solution stability.

6. The dissolved product is transferred to the Product Transfer Vessel (PTV). The dissolver and complexer vessels are flushed with cadmium-poisoned water in successive cycles in which the dissolver and complexer vessels are rinsed several times. Each flush is transferred to the PTV.

7. The dissolver product in the PTV is sampled for uranium accountability purposes.

8. The dissolved product is transferred from the PTV to CPP-601 for uranium recovery operations.

LIQUID WASTE SYSTEMS

The liquid waste handling system is comprised of three separate systems. The high fluoride liquid wastes are collected in VES-FA-141. The non-fluoride liquid wastes are collected in VES-FA-142. Radioactive liquid wastes are collected in the three vessels in the FDP cell, the sump, VES-FC-184 (Slab

Tank), and VES-FC-147 (PTV). The system contains equipment for the collection of all liquid wastes produced during reagent makeup, fuel processing, and decontamination or cleanup operations. Because the FDP contains no waste treatment or disposal facilities, each of the liquid waste systems includes equipment to transfer the FDP waste to existing ICPP waste treatment facilities.

Liquid wastes handled by the high fluoride liquid waste system are nonradioactive liquid wastes containing either HF or fluoboric (HBF_4). These wastes are collected from FM Area vessels, piping, and pumps used in the HF makeup and feed system. The piping and equipment for this system are primarily fabricated from Hastelloy C-4. The wastes include: out-of-specification reagent solutions that cannot be adjusted to meet process requirements; leaks from FM Area piping, pumps, and vessels; and waste produced when FM Area equipment is drained for maintenance or repairs. All the waste streams drain to two collection headers which drain to VES-FA-141 (see Table 1). Aluminum nitrate is added to VES-FA-141 to complex excess fluoride, limiting corrosion of downstream stainless steel piping and treatment facilities.

TABLE 1 - HIGH FLUORIDE WASTE SOURCES FOR VES-FA-141

Waste Collection Header	Vessels, Equipment, or Drains
1-1/2"-XW-HC-0528	Scrubber SCR-FH-180 Scrubber pump P-FH-280 Overflows from HF Tanks VES-FM-156, -166 Overflows from recirc/transfer pumps P-FM-256, -266 Drain line for HF distribution header HF-HC-6064
2"-XW-HC-1143	Drains under VES-FM-156 and -166

The non-fluoride liquid waste system collects and transfers waste from numerous areas throughout the FDP. These areas include the FM Area, corridor and open area floor drains, and drainage wastes from service sinks located at various levels in the FDP. The drains feed two collection headers which drain to VES-FA-142 (see Table 2).

TABLE 2 - NON-FLUORIDE WASTE SOURCES FOR VES-FA-142

Waste Collection Header	Vessels, Equipment, or Drains
4"-XW-AD-0530	6 drains located under walkway (Rm. 114B) 2 drains in chemical storage area (Rm. 116) 2 drains in Rm. 114A 2 floor drains (Rm. 114C) 1 drain in loading/loadout area (Rm. 115) 4 drains in the east corridor (one per level) 4 drains in the west corridor (one per level) Utility sink drains in the northwest corridor (3 levels)
4"-XW-AD-0529	Drains for VES-FM-103,-151,-152,-157,-158,-161,-162, and -167 Drains for pumps P-FM-201,-204,-251,-252,-257,-258,-261, -262, and -267 Drain lines for poison water (PW) headers Drain for HE-FM-305 Drain for mist eliminator DM-FM-404 Condensate drain line from 4"-HS-NC-7575-1 Drain line from sump pump P-FM-279B

Although the primary function of the PTV is to transfer complexed dissolver product to CPP-601, it also serves as one of two subsystems for handling radioactive liquid wastes. The dissolution cell sump and the sump hold tank or Slab tank is the other. All wastes from the process equipment in the cell are collected in the PTV and transferred to the appropriate disposal system. Other wastes generated in the cell, such as leakage and decontamination solutions are collected in the cell sump and transferred to the Slab tank for sampling prior to transferring them to the process or to CPP-601 for disposal. The wastes are of two general types: those with high fluoride content and those containing no fluoride. Table 3 shows the sources of liquid waste for the dissolution cell sump.

TABLE 3 - LIQUID WASTE SOURCES FOR CELL SUMP

Type of Drain	Source of Area, Equipment, or Pump Drains
Area Drains	Liquid sample cell drains H_2/O_2 analyzer drain Crane maintenance area floor drain Waste loadout room, B-4
Equipment Drains	Neutron interrogator drain Transmitter enclosure drains Interim storage tubes Crane door drains
Pump Drains	P-FC-216, DOG scrubber P-FC-226, DOG scrubber P-FC-236, DOG scrubber P-FC-247, PTV pump P-FC-248, PTV pump

INTEGRITY ASSESSMENT

The Integrity Assessment required by RCRA specifies five areas that must be considered:

1. Design Standards
2. Hazardous Characteristics of the Waste
3. Corrosion Protection Measures
4. Documented age of the Tank System
5. Results of a leak test, internal inspection or other integrity examination.

In accordance with the Integrity Assessment Plan[2], this section summarizes the consideration of each of the above areas relative to the integrity of the subject piping.

DESIGN STANDARDS

Construction drawings and design specifications for FAST were developed by the Ralph M. Parsons Company, as part of the FAST Project, and approved by the ICPP operating contractor (EXXON Nuclear Company, Inc.). These documents were developed in accordance with the FAST Project Design Criteria (PDC)[3].

Structural requirements of the PDC included a building design life of 40 years and a 20 year design life for the FDP; that all new construction be designed to meet the requirements of the Uniform Building Code (1976 Edition); and that the building, safety related systems, and all essential mechanical equipment and supports be designed to withstand the effects of the design basis natural phenomena as defined in the PDC. The Design Basis Earthquake (DBE) was defined

to have a resultant vertical bedrock acceleration of 0.16g and horizontal acceleration of 0.24g.

Design, construction, testing, and operation of the facility was required by the PDC "To be in compliance with the current DOE-ID Engineering Standards and other DOE, Federal, State, local, and national consensus regulations, standards, and codes...". Piping and valves were designed and installed in accordance with applicable sections of the ASME/ANSI B31.1, "Power Piping".

The Design Criteria, drawings, and specifications, together with the QA Inspection documentation from the construction activity, adequately document that the FAST liquid waste handling systems have sufficient structural strength to ensure that they will not collapse, rupture, or fail under normal operating conditions.

HAZARDOUS CHARACTERISTICS OF THE WASTE

From a materials compatibility standpoint the hazardous characteristics of the wastes that are of primary concern result from the reagents used in the dissolution process. Table 4 provides details of the process solutions:

TABLE 4 - STOCK SOLUTIONS AND PROCESS REAGENTS FOR FDP[4]

STOCK SOLUTIONS	PROCESS REAGENTS
44 M hydrofluoric acid (HF)	HF dissolvent (13.3 M HF, 10.8 g/l boron
2.2 M aluminum nitrate	HNO_3 dissolvent [13 M HNO_3, 0.214 M $Cd(NO_3)_2$]
cadmium sulfate ($CdSO_4$)	aluminum nitrate solution [2.2 M $Al(NO_3)_3$, 0.214 M $Cd(NO_3)_2$]
13.2 M nitric acid	Cd-poisoned water (heel and rinse water) (0.214 M $CdSO_4$)
cadmium nitrate [$Cd(NO_3)_2$]	zirconium carbonate solution [29% wt ZrO_2CO_2, 13 M HNO_3, 4 M $Cd(NO_3)_2$]
1.8 M zirconium nitrate [$Zr(NO_3)_4$]	*H_2SO_4 dissolvent (17.35 M H_2SO_4, 0.214 $CdSO_4$)
*17.35 M sulfuric acid (H_2SO_4)	

* only used during cold operation

From a RCRA standpoint the waste codes associated with the tank systems are D002 (pH), corrosive hazard from the acids and D006 (cadmium), toxic hazard. Although the reagents listed in Table 4 may not be the exact solutions used in future alternative uses of the facility they certainly envelope any possibilities. Therefore, they are the basis for the materials compatibility evaluation.

CORROSION PROTECTION MEASURES

Several design and operating features combine to ensure integrity from a corrosion protection standpoint. As detailed in Reference 1 the materials of construction were selected following an extensive materials testing program based on the process flowsheets. The corrosive nature of the reagents was the basis for the selection of respective types of corrosion resistant materials. The systems that handle HF utilize Hastelloy C-4 for the piping. All other waste piping is constructed of 304L stainless steel. The materials selection is supplemented with procedural requirements to complex the free-HF before it is transferred out of Hastelloy C-4 equipment and into 304L stainless steel equipment whuch is less resistent to HF. Protection from exterior corrosion is provided by corrosion resistant coatings (high density polyethylene) applied to the exterior surfaces of piping in direct buried service.[5] Cathodic protection was also required for underground piping.[6]

The combination of corrosion resistant materials, external corrosion protection measures, and operating procedures ensures that the subject systems will not collapse, rupture, or fail under normal operating conditions.

DOCUMENTED AGE OF THE TANK SYSTEM

The age of an ICPP RCRA Tank System is defined as the date of first service for its intended purpose. This includes initial cold chemical operations. The FDP first operated in December of 1984. Therefore the documented age of the tank systems is 8-1/4 years. The start date is documented in WINCO letter, ECT-25-92,[7] dated September 8, 1992. It should be noted that the FDP process has not been operated since 1988.

INTEGRITY EXAMINATION

As noted in the Integrity Assessment Plan, the FDP has had limited and well known usage since its construction. It is basically a new facility. The initial integrity of the subject waste systems were demonstrated by the initial hydrostatic and pneumatic testing following construction. To confirm current integrity, all of the lines feeding the respective tank systems were evaluated for "worst case" usage. Worst case was clearly 2"-XW-HC-1143 due to the fact that a dolomite plug in the drippan drain for VES-FM-166 occurred in 1989. To clear the plug an aggressive ammonium nitrate/nitric acid solution was used. When the plug was dissolved the line was rinsed 3 times to VES-FA-141. Ultrasonic thickness measurements were therefore taken just below the subject drain and where the pipe is first accessible after exiting from the underground in the overhead of the -31' Level. . Attachments 1 and 2 give the results of ultrasonic (UT) thickness measurements. Due to easy access of most of the waste piping additional measurements were taken to validate the assumption that any corrosion would be uniform. Attachment 3 compares the UT results with the nominal wall thicknesses. With the exception of some of the readings on the "worst case" pipe, all readings are within the 12.5% manufacturing tolerance for new pipe or fittings. In the drain region of 2"-XW-HC-1143 a 1% wall loss is indicated. On the 304L side of the transition

from Hastelloy a significant wall loss of about 50% is indicated. Additional readings (Attachment 4) were taken to confirm that a portion of the original 304L piping remained in service when a later modification tied 2"-XW-HC-1143 into 1-1/2"-XW-HC-0528. Since the tie-in required a loop over an adjacent 4" line a P-trap was effectively added to the system. The retension of the 304L section with reduced wall provides a weak link that ensures failure within a secondarily contained area before a failure in the underground portion of piping. This 304L SS section of pipe does not require integrity assessment because it is entirely within the -31' level room, which provides the required secondary containment.

Attachment 5 contains the results of the leak test on the sump. The data shows that the level remained constant, within the accuracy of the level instrumentation, for the two week test period.

CONCLUSIONS

Based on the background information reviewed and summarized in the foregoing sections, together with the results of the integrity examinations, it is concluded that the integrity of the subject piping is sufficient to ensure that it will not collapse, rupture, or fail under normal operating conditions.

REFERENCES

1. C.L. Porter, "Secondary Containment Assessment for the Fluorinel and Fuel Storage Facility (FAST)", WINCO, April 1993.

2. C.L. Porter, "Integrity Assessment Plan for the Fluorinel and Fuel Storage Facility (FAST)", WINCO, April 1993.

3. Design Criteria for Fluorinel Process, E.H. Smith, editor, Exxon Nuclear Idaho Company, Inc., ENI-103, Rev. 5, November 5, 1979.

4. Draft RCRA Closure Plan for the Fluorinel Dissolution Process Waste Tanks at the Idaho National Engineering Laboratory, CLO-FDPW, Rev. 0, WINCO, 9/8/92.

5. Technical Specifications for Fluorinel Dissolution Process abd Metal-Clad Fuels Storage Facility, Sub-division P-06, "Coating and Wrapping of Direct Buried Piping", Ralph M. Parsons Company, Rev.0, 4/26/79.

6. Technical Specification E-9, "Cathodic Protection", Ralph M. Parsons Company, Rev. 11, 3/9/82.

7. E.C.Thiel, letter ECT-25-92 to J.E. Kaylor, "Ages of RCRA Tank Systems", dated September 8, 1992.

Form WINCO-7025 (10/92)

QUALITY INSPECTION REPORT

IR#:	SUBJECT:	ADDRESSEE:
IR 93-018	Drain Line UT Thickness Measurement	Tom Byrnes MS-5114
Page 1 of:	**PROJECT EA#/WORK ORDER/PURCHASE ORDER:**	**EQUIPMENT/SYSTEM/LOCATION:**
1	W.O. 150104	VES-FM-152/166 @ CPP-666 Rm-114B

OBSERVATION/DESCRIPTION:

The above referenced work order requested RCRA assessment of VES-FM-152 and VES-FM-166 drain lines using UT thickness measurement. The drains were 2" Hasteloy and 4" 304 SST.

Visual inspection of the drain internals revealed no scale or other associated corrosion products. Liquid was present in both lines in the "P" trap area. The side walls above the trap were dry. UT thickness measurements were obtained using a Panametrics model 26DL thickness tester ser.# 0158112 and a 0.20" 10 mHz transducer, model D973 ser.# 129016. The unit was calibrated before and after use using a 304L SST step wedge ser.# 0305 and a Hasteloy C-4 step wedge ser.# 704104. Readings were taken at 90 degree intervals around the inside circumference at 6" depth increments. Reference points were North, East, South, and West. The following measurements were obtained:

2" Hasteloy	6"	(N) 0.192	(E) 0.190	(S) 0.193	(W) 0.188
	12"	0.190	0.194	0.188	0.188
	18"	0.189	0.184	0.186	0.192
4" 304 SST	6"	(N) 0.252	(E) 0.241	(S) 0.251	(W) 0.248
	12"	0.250	0.252	0.251	0.247
	18"	0.253	0.233	0.254	0.249
	24"	0.252	0.235	0.250	0.254

Measurements were not taken at the 24" level in the 2" pipe because of concerns of wetting the probe with liquid from the "P" trap.

INSPECTOR/DATE:	SUPERVISOR/DATE:
D L Klinger 2/11/93	[illegible] 2/11/93
ADDRESSEE RESPONSE REQUIRED:	**DISTRIBUTION:** ADDRESSEE QE FILE
[ ] YES [X] NO	J. Roberts N. Porter.

ADDRESSEE REMARKS/RESPONSE:

NCR REQUIRED: [ ] YES [ ] NO	**(ADDRESSEE/RESPONDER) NAME/DATE:**
DISTRIBUTION: INSPECTOR	

Westinghouse Idaho Nuclear Company, Inc.

FORM WINCO-7101 (10-84)

QUALITY ASSURANCE ULTRASONIC EXAMINATION REPORT

Inspection Plan No.	Material			
NA	Identification: 304L & Hastalloy CH	Type: See Pg 2 of 6	Thickness: To be determined	Surface Condition: Factory Smooth

Equipment Type and Number	Couplant	Calibration Reference Block No.	Material Type	
Pana 26DL S/N 158112	Sonotech	304L 0265 / CH Hastalloy RT Shim	NA	Procedure 8.9.6 Rev.

Saddles, Wedges, or Shoes (Where Applicable)	Scanning Mechanism (Where Applicable)	
NA	NA	Scanning Method: Static
		Scanning Level: NA
Item/Component Description: See Attached Sheet		Calibration Time: Start 0900; 1000; 1100 Finish 1230; 1400

Instrument Settings (Where Applicable)	
Frequency	NA
Pulse Length/Energy	
Material/Sweep Delay	
Test Range/Sweep Length	
Suppression/Reject	
Swept Gain/DAC Curve	
Calibrated Gain in db	
Uncalibrated Gain	
Reject Level/Limit	
Reference Level	
Tran. Mode	

Search Units (Where Applicable)	
Brand	Panametrics
Serial Number	128908
Nominal Angle	Normal
Size	0.20"
Nominal Freq. (MHZ)	5.0 MHz

SKETCH OF ITEM INSPECTED (Where Applicable)

See Attached Sheets for Thickness Readings & Sketch of Pipe.

Note 1 All dimensions in Inches

Note 2 Location of UT Readings marked on Pipe

Disposition: ☐ Accept ☐ Reject Acceptance Standard Used: NA

QA Inspector: [signature] Level: IV Date: 2/20/92

Remarks: Thickness Test for Base line Data.

QA Supervisor: [signature] Date: 2/21/92

Distribution: T. Baynes, C.L. Porter, J.E. Kaylor, File

NOTEGRAM

DATE: FEBRUARY 18, 1992

TO: B.J. ARCHIBALD
FROM: C.L. PORTER
SUBJECT: UT MEASUREMENTS FOR FDP INTEGRITY ASSESSMENT

THE HAZARDOUS WASTE LINES AT FDP NEED TO BE ASSESSED FOR INTEGRITY. IN ORDER TO DETERMINE THE AMOUNT OF NDE NECESSARY TO PROPERLY PERFORM THE INTEGRITY ASSESSMENT SOME PRELIMINARY WALL THICKNESS MEASUREMENTS ARE NEEDED. THE INITIAL LOCATIONS ARE SUMMARIZED BELOW:

LINE NUMBER	MATERIAL	APPROX. LOCATION
2"-XW-HC-121143	HASTELLOY C-4 SCHEDULE 80S	-31 FT LEVEL WHERE PIPE EXITS WALL
1"-XW-HC-120519	HASTELLOY C-4 SCHEDULE 80S	PIPING ON BOTH SIDES OF VALVE V-FO-8058
1"-XW-HC-120518	HASTELLOY C-4 SCHEDULE 80S	PIPING ON BOTH SIDES OF VALVE V-FO-8057
1 1/2-XW-HC-120528	HASTELLOY C-4 SCHEDULE 80S	NEAR 121143 TIE-IN AND ALSO NEAR TANK END.
1 1/2"-XW-AD-121134	304L SS SCHEDULE 40S	JUST PRIOR TO WALL PENETRATION INTO VALVE CUBICLE (-13FT LEVEL)
1"-XW-AD-128425	304L SS SCHEDULE 40S	SAME AREA AS LINE 121134
4"-XW-AD-120529	304L SS SCHEDULE 40S	NEAR WALL PENETRATION AND ALSO NEAR TANK END (-31FT LEVEL)
3"-XW-AD-121145	304L SS SCHEDULE 40S	-31FT LEVEL UTILITY SINK DRAIN

CONTACT TOM BYRNES, 6-3308, FOR SPECIFIC LOCATIONS.

THE CHARGE NUMBER FOR THIS WORK IS 15970-700-131.

PLEASE DOCUMENT THE EXACT LOCATIONS IN THE EVENT THESE MEASUREMENTS NEED TO BE REPEATED IN SUBSEQUENT YEARS.

TO SUPPORT THE CURRENT SCHEDULE FOR THE ASSESSMENT WE NEED THESE PRELIMINARY WALL THICKNESS MEARUREMENTS BY 2/21/92.

cc: T. R. BYRNES
J. A. DOWALO
J. E. KAYLOR

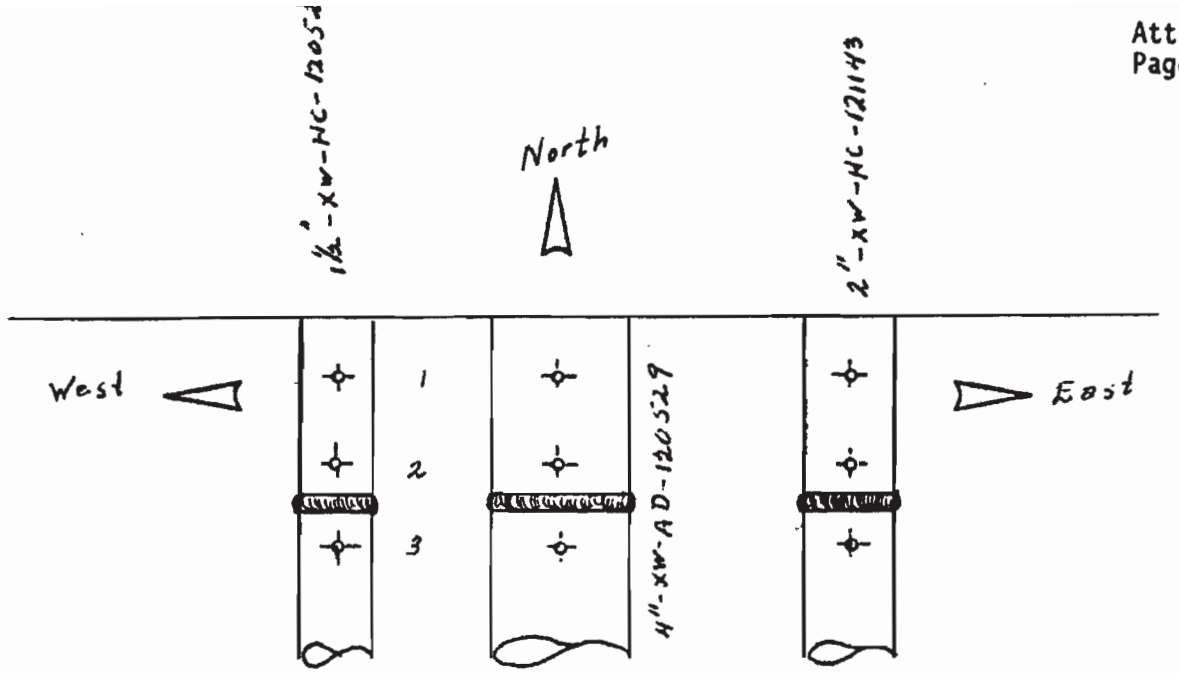

	TOP	EAST	BOT	WEST
1	0.352	0.352	0.352	0.350
2	0.352	0.355	0.354	0.351
3	0.123	0.092	0.093	0.138

PIPE 1143

1	0.245	0.243	0.243	0.250
2	0.250	0.249	0.247	0.250
3	0.263	0.260	0.263	0.260

PIPE 1529

1	0.299	0.298	0.301	0.301
2	0.300	0.298	0.300	0.303
3	0.199	0.197	0.198	0.200

PIPE 0528

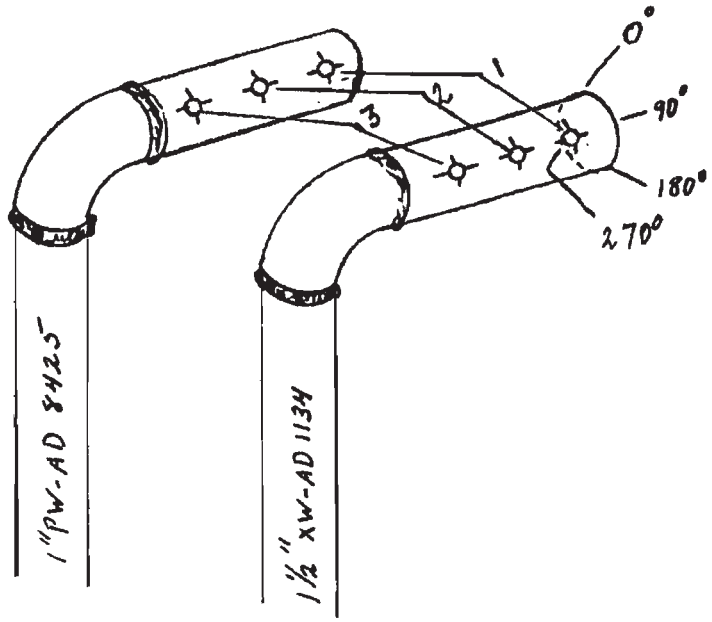

	0°	90°	180°	270°
1	0.135	0.135	0.128	0.130
2	0.135	0.133	0.131	0.130
3	0.136	0.135	0.128	0.136

Pipe 8425

Pipe 1134

1	0.139	0.148	0.146	0.140
2	0.140	0.147	0.145	0.141
3	0.141	0.148	0.145	0.142

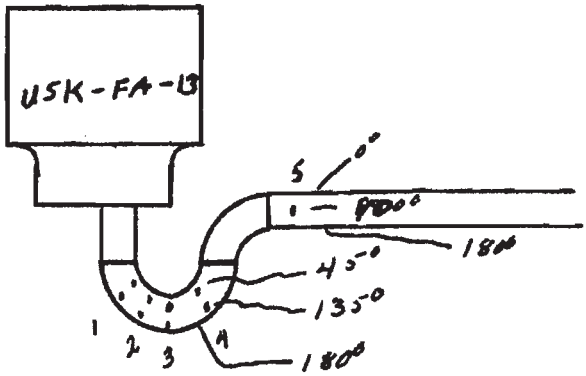

	45°	135°	180°	270°
1	0.277	0.246	0.226	0.240
2	0.285	0.247	0.222	0.255
3	0.264	0.243	0.222	0.280
4	0.258	0.262	0.225	0.256

	0°	90°	180°	270°
5	0.215	0.212	0.213	0.210

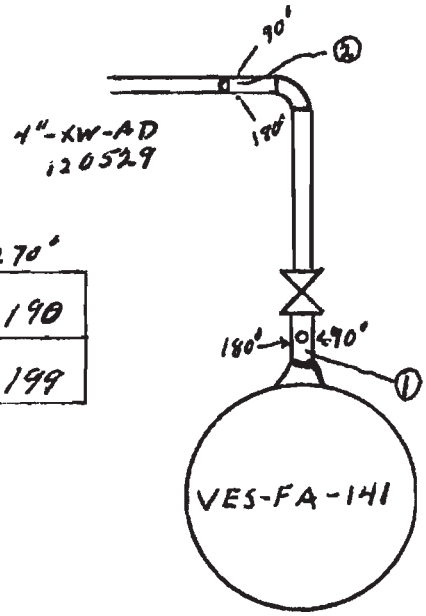

	0°	90°	180°	270°
1	0.192	0.204	0.196	0.190
2	0.198	0.198	0.196	0.199

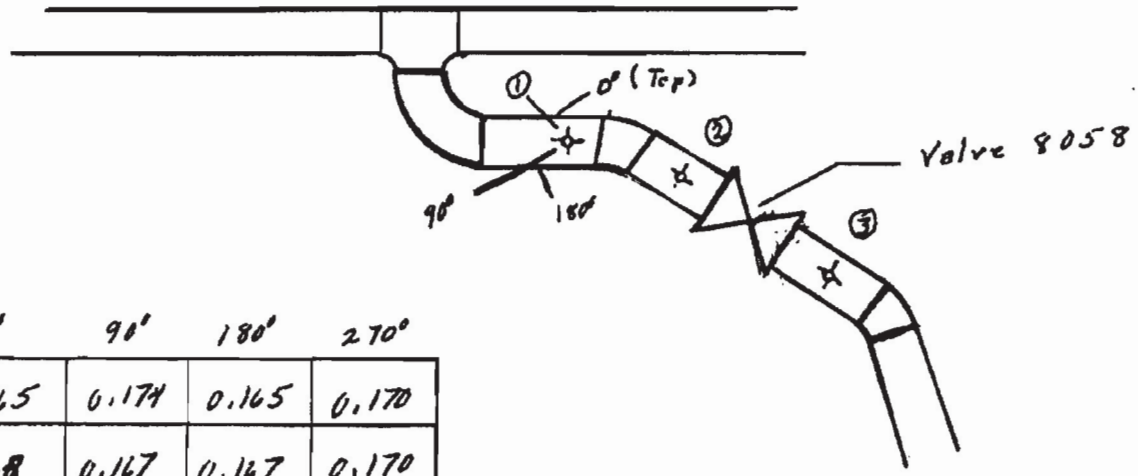

	0°	90°	180°	270°
1	0.165	0.174	0.165	0.170
2	0.168	0.167	0.167	0.170
3	0.174	0.174	0.177	0.170

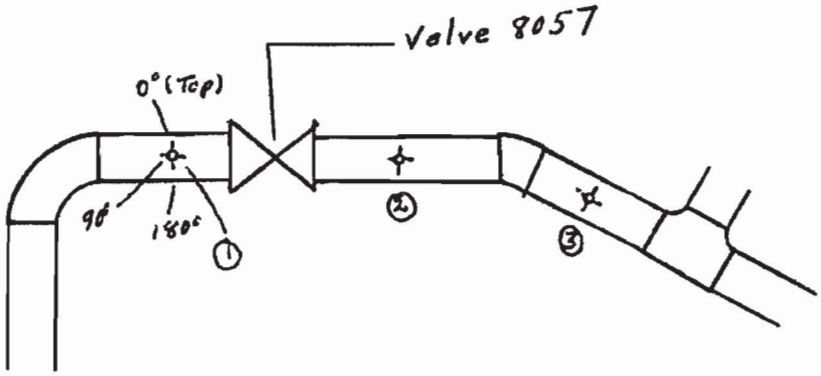

	0°	90°	180°	270°
1	0.174	0.176	0.176	0.178
2	0.175	0.181	0.177	0.177
3	0.180	0.180	0.178	0.181

FDP INTEGRITY ASSESSMENT DATA REDUCTION

						AVE	NOMINAL	% REDUCTION
2" HASTALLOY	6"	0.192	0.190	0.193	0.188	0.191	0.218	12.50%
	12"	0.190	0.194	0.188	0.188	0.190	0.218	12.84%
	18"	0.189	0.184	0.186	0.192	0.188	0.218	13.88%
4" 304 SS	6"	0.252	0.241	0.251	0.248	0.248	0.237	-4.64%*
	12"	0.25	0.252	0.251	0.247	0.250	0.237	-5.49%*
	18"	0.253	0.233	0.254	0.249	0.247	0.237	-4.32%*
	24"	0.252	0.235	0.25	0.254	0.248	0.237	-4.54%*
2"-XW-HC-1143		0.352	0.352	0.352	0.35	0.352	0.344	-2.18%*
		0.352	0.355	0.354	0.351	0.353	0.344	-2.62%*
		0.123	0.092	0.093	0.138	0.112	0.218	48.85%
4"-XW-AD-0529		0.245	0.243	0.243	0.25	0.245	0.237	-3.48%*
		0.25	0.249	0.247	0.25	0.249	0.237	-5.06%*
		0.263	0.26	0.263	0.26	0.262	0.237	-10.34%*
1-1/2"-XW-HC-0528		0.299	0.298	0.301	0.301	0.300	0.281	-6.67%*
		0.3	0.298	0.3	0.303	0.300	0.281	-6.85%*
		0.199	0.197	0.198	0.2	0.199	0.200	0.75%*
1"-XW-AD-8425		0.135	0.135	0.128	0.13	0.132	0.133	0.75%*
		0.135	0.133	0.131	0.13	0.132	0.133	0.56%*
		0.136	0.135	0.128	0.13	0.132	0.133	0.56%*
1-1/2"-XW-AD-1134		0.139	0.148	0.146	0.14	0.143	0.145	1.21%*
		0.14	0.147	0.145	0.141	0.143	0.145	1.21%*
		0.141	0.148	0.145	0.142	0.144	0.145	0.69%*
UTILITY SINK P-TRAP		0.277	0.246	0.226	0.24	0.247	0.216	-14.47%*
		0.285	0.247	0.222	0.255	0.252	0.216	-16.78%*
		0.264	0.243	0.222	0.28	0.252	0.216	-16.78%*
		0.258	0.262	0.225	0.251	0.249	0.216	-15.28%*
		0.215	0.212	0.213	0.21	0.213	0.216	1.62%*
1-1/2"-XW-HC-0528		0.192	0.204	0.196	0.19	0.196	0.200	2.25%*
(NEAR VES-FA-141)		0.198	0.198	0.196	0.199	0.198	0.200	1.13%*
1"-XW-HC-0519		0.165	0.174	0.165	0.17	0.169	0.179	5.87%*
		0.168	0.167	0.167	0.17	0.168	0.179	6.15%*
		0.174	0.174	0.177	0.17	0.174	0.179	2.93%*
1"-XW-HC-0519		0.179	0.176	0.176	0.178	0.177	0.179	0.98%*
		0.175	0.181	0.177	0.177	0.178	0.179	0.84%*
		0.18	0.18	0.178	0.181	0.180	0.179	-0.42%*
4"-XW-AD-0529		0.211	0.221	0.227	0.221	0.220	0.237	7.17%*
(NEAR VES-FA-142)		0.224	0.23	0.228	0.226	0.227	0.237	4.22%*

* NO REDUCTION BELOW NOMINAL, STILL WITHIN MANUFACTURER'S TOLERANCES

Form WINCO-7025 (10/92)

QUALITY INSPECTION REPORT

IR#:	SUBJECT:	ADDRESSEE:
IR 93-052	2" XW-HC-1143 UT THICKNESS	CRAIG L. PORTER
Page 1 of: 2	PROJECT EA#/WORK ORDER/PURCHASE ORDER: W.O. 151680	EQUIPMENT/SYSTEM/LOCATION: CPP666 RM -31' LEVEL N. WALL

OBSERVATION/DESCRIPTION:

THE ABOVE REFERENCED WORK ORDER REQUESTED ADDITIONAL ULTRASONIC THICKNESS MEASUREMENTS OF 2" XW-HC-1143 PIPING IN FAST TO SUPPORT FDP INTEGRITY ASSESSMENT.

ULTRASONIC THICKNESS MEASUREMENTS AND LOCATIONS ARE ANNOTATED ON THE ATTACHED DRAWING. THESE MEASUREMENTS ARE FOR ENGINEERING EVALUATION ONLY.

THE THICKNESSES WERE OBTAINED USING A PANAMETRICS MODEL 26DL THICKNESS TESTER SER.# 0121405 AND A 0.312", 5MHZ TRANSDUCER MODEL D971 SER.#109139. THE UNIT WAS CALIBRATED BEFORE AND AFTER USE, USING A 304L STEP WEDGE SER.# 0325, AND A HAST.,C4 STEP WEDGE SER.# 704104 AND 704105.

INSPECTOR/DATE:	SUPERVISOR/DATE:
D K Klinger 4-19-93	[illegible] 4/19/93
ADDRESSEE RESPONSE REQUIRED: [ ] YES [X] NO	DISTRIBUTION: ADDRESSEE QE FILE J. ROBERTS CRAIG PORTER

ADDRESSEE REMARKS/RESPONSE:

NCR REQUIRED: [ ] YES [ ] NO	(ADDRESSEE/RESPONDER) NAME/DATE:
DISTRIBUTION: INSPECTOR	

L R
B

LOC	TOP	Right	BOT.	LEFT
1	.340	.358	.355	.355
2	.142	.103	.085	.092
3	.142	.134	.081	.143
4	.146	.123	.085	.095
5	N/A	.224	.225	.241
6	N/A	.235	.224	.237
7	N A	.239	.224	.239
8	N A	.231	.229	.230
9	.221	.218	.218	.221
10	.217	.223	.220	.215
11	.221	.228	N A	.246
12	.222	.232	N/A	.240
13	N/A	.247	N/A	.241

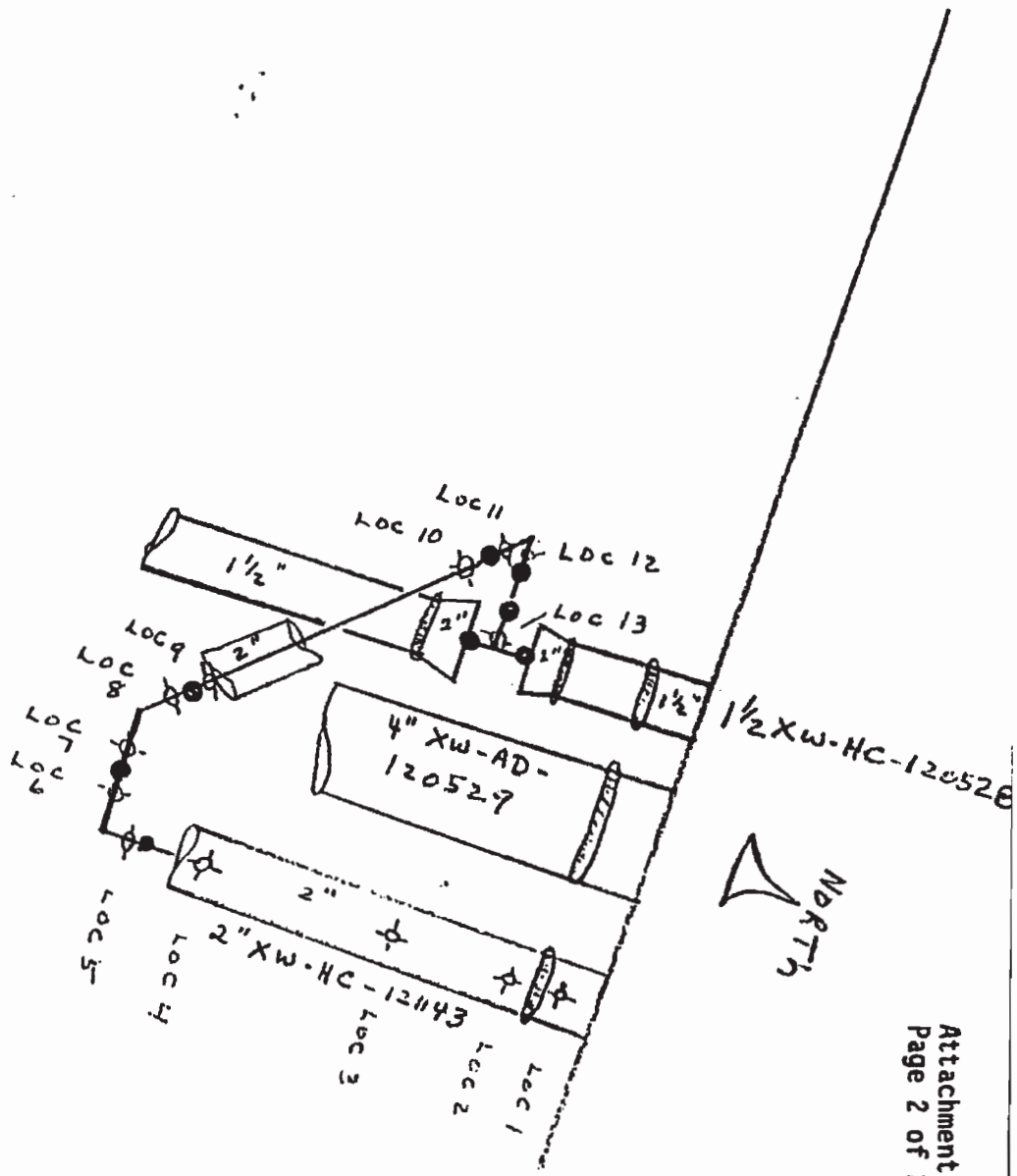

Title: FDP In-Cell Sump Liner Integrity Test

1.0 PURPOSE

To conduct a free standing water test of the FDP In-cell sump stainless steel liner for verification that the sumps liner is intact and does not leak. This test is part of the Environmental Integrity Assessment for waste lines and collection sumps at FDP.

2.0 PROCEDURE AND DATA COLLECTION FOR SUMP LINER INTEGRITY TEST

2.1 Record the time, date and current sump level in the appropriate spaces below:

Date: 2-21-92 Time: 1610 Level: 14.1" inches

2.2 Monitor the cell sump level by using LI-FC-076-1 located in the MCR.

2.3 Record the time, date and sump level every 24 hrs. This integrity test will last approximately 2 weeks

Op. Sig:	Date:	Time:	Level:
[illegible]	2-22-93	1610	14.1" in.
[illegible]	2-23-92	1610	14.1"
[illegible]	2-24-92	1610	14.1
[illegible]	2-25-92	1610	14.2
[illegible]	2/26/92	1610	14.2
[illegible]	2-27-92	1610	14.2
[illegible]	2-28-92	1610	14.3
[illegible]	2/29/92	1610	14.2
C. Andreno	2-1-92	1610	14.2"
C. Andreno	3-2-92	1620	14.1"
C. Andreno	3-3-92	1610	14.1"
[illegible]	3-4-92	1611	14.1" *
T. Byrne	3-5-92	1610	14.1"

* MISSED READING WAS VERIFIED ON DPSE POINT L019 HISTORY ON DATE AND TIME INDICATED, RECORDED ON THIS LOG 3-5-92 @ 0740,
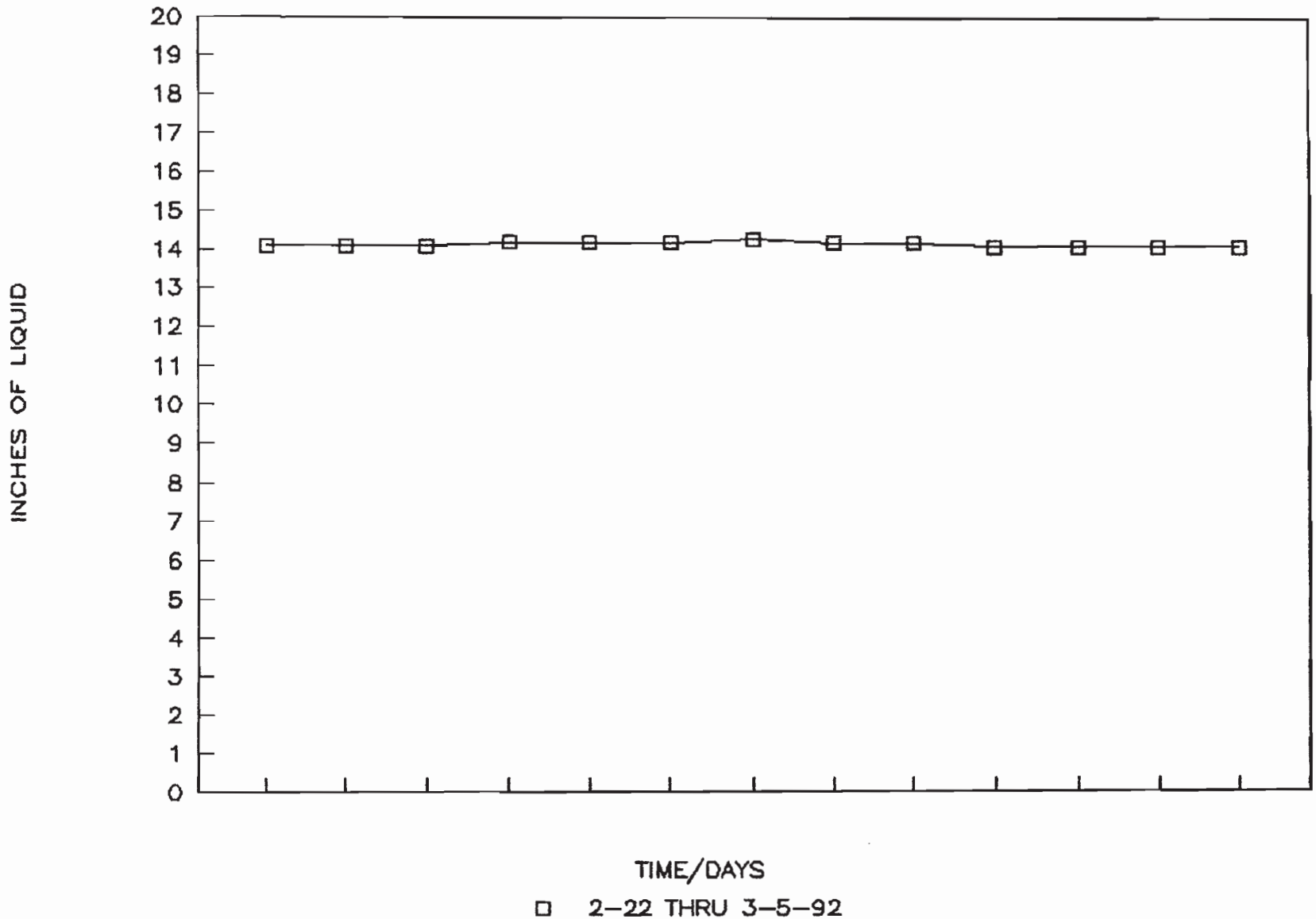
FDP IN-CELL SUMP