Idaho
Department of Environmental Quality

# AMWTP HWMA/RCRA Permit

## Idaho National Laboratory
## EPA ID No. ID4890008952

**Issued:** June 04, 2008
**Revised:** May 16, 2016

Volume III of V

# LIST OF APPENDICES


| | |
|---|---|
| Appendix I | AMWTP Process Flow Sheet Exhibits |
| Appendix II | WMF-634 Drawings, Exhibit, and Topographic Map |
| Appendix III | Type II Module Drawings |
| Appendix IV | Type I Module Drawings |
| Appendix V | SWEPP Drawings |
| Appendix VI | WMF-628 Drawings |
| Appendix VII | WMF-636 Pad 2 Drawings |
| Appendix VIII | AMWTP Outside Storage Area Drawings |
| Appendix IX | WMF-676 General Arrangement Drawings |
| Appendix X | AMWTP Control System and Data Management Exhibits |
| Appendix XI | Secondary Containment System Capacity and Maximum Waste Volume Calculations |
| Appendix XII | Asphalt Structural Stability for Loading on Pad 2 and Outside Storage Area |
| Appendix XIII | WMF-676 Ventilation Systems Remedy Schedule |
| Appendix XIV | Technical Specifications for WMF-676 HWMA/RCRA Secondary Containment Coating Systems |
| Appendix XV | Box Line Drawings and Exhibits |
| Appendix XVI | Box Line Mechanical Data Sheets |
| Appendix XVII | Material Transfer System Mechanical Data Sheets |
| Appendix XVIII | Special Case Waste and Drum Repack System Drawings/Exhibits |
| Appendix XIX | Treatment (Special Case Waste) Mechanical Data Sheets |
| Appendix XX | Treatment (Supercompaction) Exhibits |
| Appendix XXI | Treatment (Supercompaction) Mechanical Data Sheets |
| Appendix XXII | Drum Repack System Mechanical Data Sheets |
| Appendix XXIII | Example Waste Profile Form |
| Appendix XXIV | Advanced Mixed Waste Treatment Project Waste Characterization Quality Assurance Project Plan |

# APPENDIX I

## AMWTP PROCESS FLOW SHEET EXHIBITS

| Item Number | Description | Exhibit Number | Revision Number | Revision Approval Date |
|---|---|---|---|---|
| 1 | Process Flow Sheet (Volume Balance) | I-1 | 03 | Not Applicable |
| 2 | Process Flow Sheet (Mass Balance) | I-2 | 02 | Not Applicable |

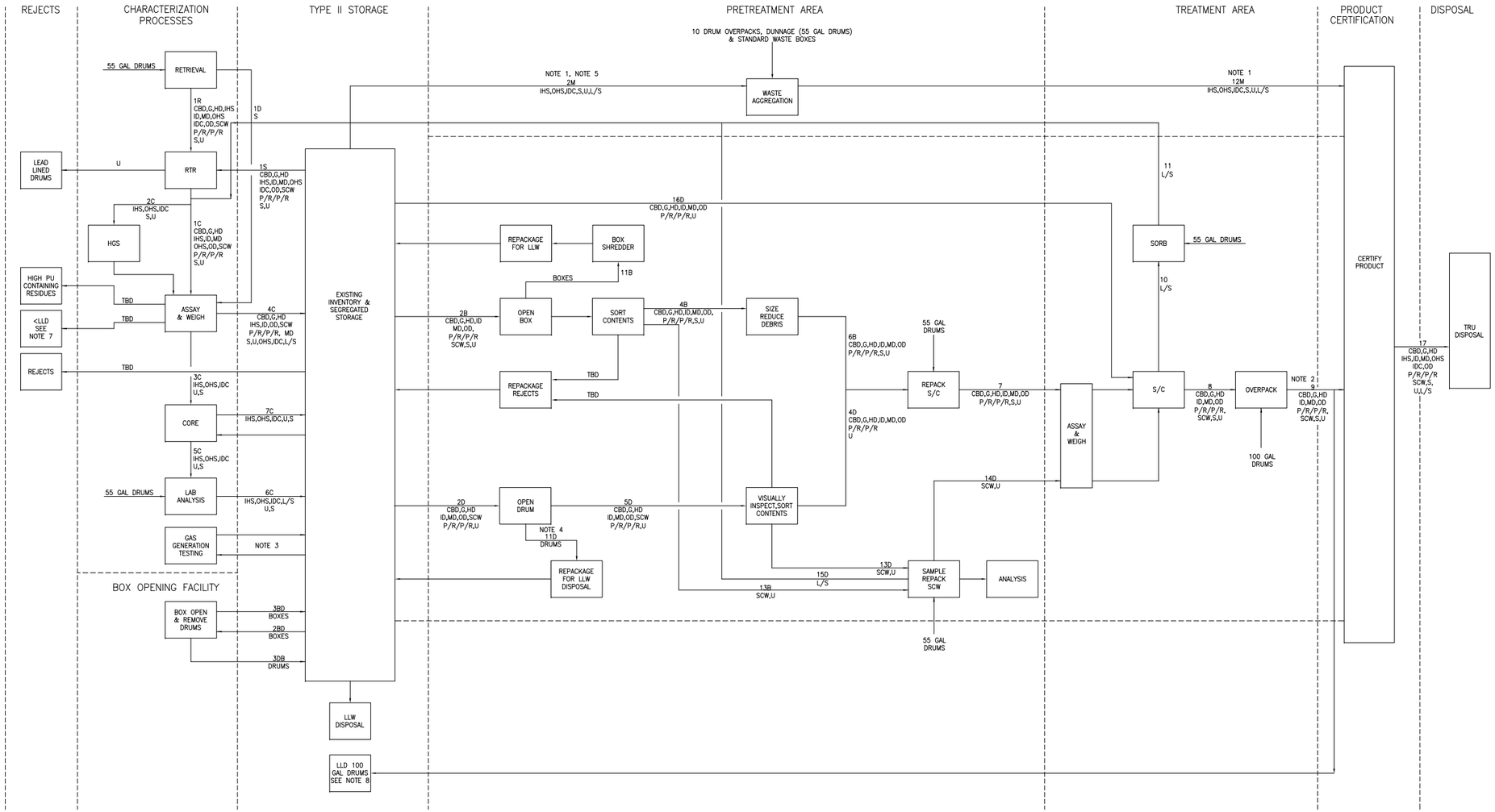


NOTE: TBD – TO BE DETERMINED

NOTE:
1. 3C SHOWS VOLUME TO CORE (DRUMS); HOWEVER, SOME DRUMS ARE CORED TWICE FOR REPLICATE ANALYSIS.
2. THIS EXHIBIT WAS CREATED FROM DRAWING 1–05–55–001 REV. 09.

NUMBERS (NOT VOLUMES)

NUMBERS (NOT VOLUMES)

| WASTE CATEGORY | VOLUME ($M^3$) | % DRUMS | DRUM | %BOX/ BIN | BOX/ BIN | 1R | 1S | 1C | 1D | 2C | 3C | 4C | 5C | 6C | 7C | 2BD | 3DB | 3BD | 2B | 2D | 16D | 2M | 11B | 11D | 13B | 4B | 15D | | 13D | 6B | 4D | 7 | 5D | 11 | 14D | 10 | 8 | 12M | 9 | 17 | TREATMENT |
|---|---|---|---|---|---|---|---|---|---|---|---|---|---|---|---|---|---|---|---|---|---|---|---|---|---|---|---|---|---|---|---|---|---|---|---|---|---|---|---|---|---|
| CERAMIC/BRICK DEBRIS (CBD) | 325 | 1.37 | 249 | 0.22 | 76 | 288 | 37 | 325 | – | – | – | 346 | – | – | – | – | – | – | 76 | 50 | 199 | – | 24 | 239 | – | 76 | – | | – | 76 | 50 | 126 | 50 | – | – | – | 81 | – | 81 | 81 | – |
| GRAPHITE (G) | 508 | 2.78 | 505 | 0.01 | 3 | 283 | 225 | 508 | – | – | – | 541 | – | – | – | – | – | – | 3 | 101 | 404 | – | 1 | 486 | – | 3 | – | | – | 3 | 101 | 104 | 101 | – | – | – | 127 | – | 127 | 127 | – |
| HETEROGENEOUS DEBRIS (HD) | 3,653 | 4.09 | 742 | 8.36 | 2,911 | 3,357 | 296 | 3,653 | – | – | – | 3,890 | – | – | – | – | – | – | 2,911 | 148 | 594 | – | 918 | 713 | – | 2,911 | – | | – | 2,911 | 148 | 3,059 | 148 | – | – | – | 913 | – | 913 | 913 | – |
| INORGANIC HOMOGENEOUS SOLID (IHS) | 9,298 | 48.57 | 8,812 | 1.40 | 486 | 5,621 | 3,677 | – | – | 9,298 | 106 | 8,437 | 0.02 | 0.02 | 106.84 | 153 | 486 | 153 | – | – | – | 9,198 | – | – | – | – | – | | – | – | – | – | – | – | – | – | – | 9,198 | – | 9,198 | 100 |
| INORGANIC DEBRIS (ID) | 4,944 | 4.21 | 763 | 12.01 | 4,181 | 3,925 | 1,019 | 4,944 | – | – | – | 5,265 | – | – | – | – | – | – | 4,181 | 153 | 610 | – | 1,319 | 734 | – | 4,181 | – | | – | 4,181 | 153 | 4,334 | 153 | – | – | – | 1,236 | – | 1,236 | 1,236 | – |
| METAL DEBRIS (MD) | 16,001 | 5.69 | 1,032 | 42.99 | 14,969 | 13,655 | 2,346 | 16,001 | – | – | – | 17,041 | – | – | – | – | – | – | 14,969 | 206 | 826 | – | 4,722 | 992 | – | 14,969 | – | | – | 14,969 | 206 | 15,175 | 206 | – | – | – | 4,000 | – | 4,000 | 4,000 | – |
| ORGANIC HOMOGENEOUS SOLID (OHS) (EXCLUDING IDC 003) | 299 | 1.65 | 299 | 0.00 | – | 183 | 116 | – | – | 299 | 4 | 272 | 0.0 | 0.0 | 3.42 | – | – | – | – | – | – | 269 | – | – | – | – | – | | – | – | – | – | – | – | – | – | – | 299 | – | 299 | – |
| IDC 003 (IDC) | 1,571 | 8.45 | 1,533 | 0.11 | 38 | 1,107 | 464 | – | – | 1,571 | 105 | 221 | 0.07 | 0.06 | 105.84 | 12 | 38 | 12 | – | – | – | 171 | – | – | – | – | – | | – | – | – | – | – | – | – | – | – | 171 | – | 171 | 1400 |
| ORGANIC DEBRIS (OD) | 3,875 | 2.39 | 434 | 9.88 | 3,441 | 3,040 | 835 | 3,875 | – | – | – | 4,127 | – | – | – | – | – | – | 3,441 | 87 | 347 | – | 1,085 | 417 | – | 3,441 | – | | – | 3,441 | 87 | 3,528 | 87 | – | – | – | 969 | – | 969 | 969 | – |
| PAPER/RAGS/PLASTIC/RUBBER (P/R/P/R) | 12,046 | 19.24 | 3,490 | 24.57 | 8,556 | 9,178 | 2,868 | 12,046 | – | – | – | 12,828 | – | – | – | – | – | – | 8,556 | 698 | 2,792 | – | 2,699 | 3,356 | – | 8,556 | – | | – | 8,556 | 698 | 9,254 | 698 | – | – | – | 2,995 | – | 2,995 | 2,995 | – |
| SPECIAL CASE WASTE (SCW) | 191 | 0.85 | 155 | 0.10 | 36 | 161 | 30 | 191 | – | – | – | 203 | – | – | – | – | – | – | 36 | 155 | – | – | 11 | 745 | 36 | – | – | | 155 | – | – | – | 155 | – | 191 | – | 48 | – | 48 | 48 | – |
| SOILS (S) | 2,252 | 0.71 | 2,128 | 0.36 | 124 | 242 | 10 | 222 | 2,000 | 30 | 2 | 2,378 | 0.0 | 0.0 | 1.48 | – | – | – | 124 | – | – | 2,128 | 39 | – | – | 124 | – | | – | 124 | – | 124 | – | – | – | – | 31 | 2,128 | 31 | 2,159 | – |
| UNKNOWN (U) (PRE 1973) | 11,796 | | 11,544 | | 252 | 11,421 | 375 | 5,106 | – | 6,690 | 124 | 10,869 | 0.11 | 0.10 | 123.22 | >280 | 473 | >280 | 248 | 1,017 | 3,673 | 6,858 | 78 | 4,889 | 1 | 248 | – | | 99 | 248 | 918 | 1,166 | 1,017 | – | 99 | – | 1,234 | 6,858 | 1,234 | 8,093 | – |
| LIQUID/SORBENT (L/S) | – | | – | | – | – | – | – | – | – | – | – | – | 1.82 | – | – | – | – | – | – | – | 40 | – | – | – | – | 13 | | – | – | – | – | – | 65 | – | 65 | – | 274 | – | 274 | – |
| TOTAL | 66,759 | 100.00 | 31,686 | 100.00 | 35,073 | 52,461 | 12,298 | 46,871 | 2,000 | 17,888 | 341 | 66,418 | 0.2 | 2.0 | 340.8 | >445 | 997 | >445 | 34,545 | 2,615 | 9,445 | 18,695 | 10,898 | 12,571 | 37 | 34,509 | 13 | | 254 | 34,509 | 2,361 | 36,870 | 2,615 | 65 | 290 | 65 | 11,635 | 18,929 | 11,635 | 30,563 | 1500 |

# Exhibit I-1: Process Flow Sheet (Volume Balance)

Rev. 02

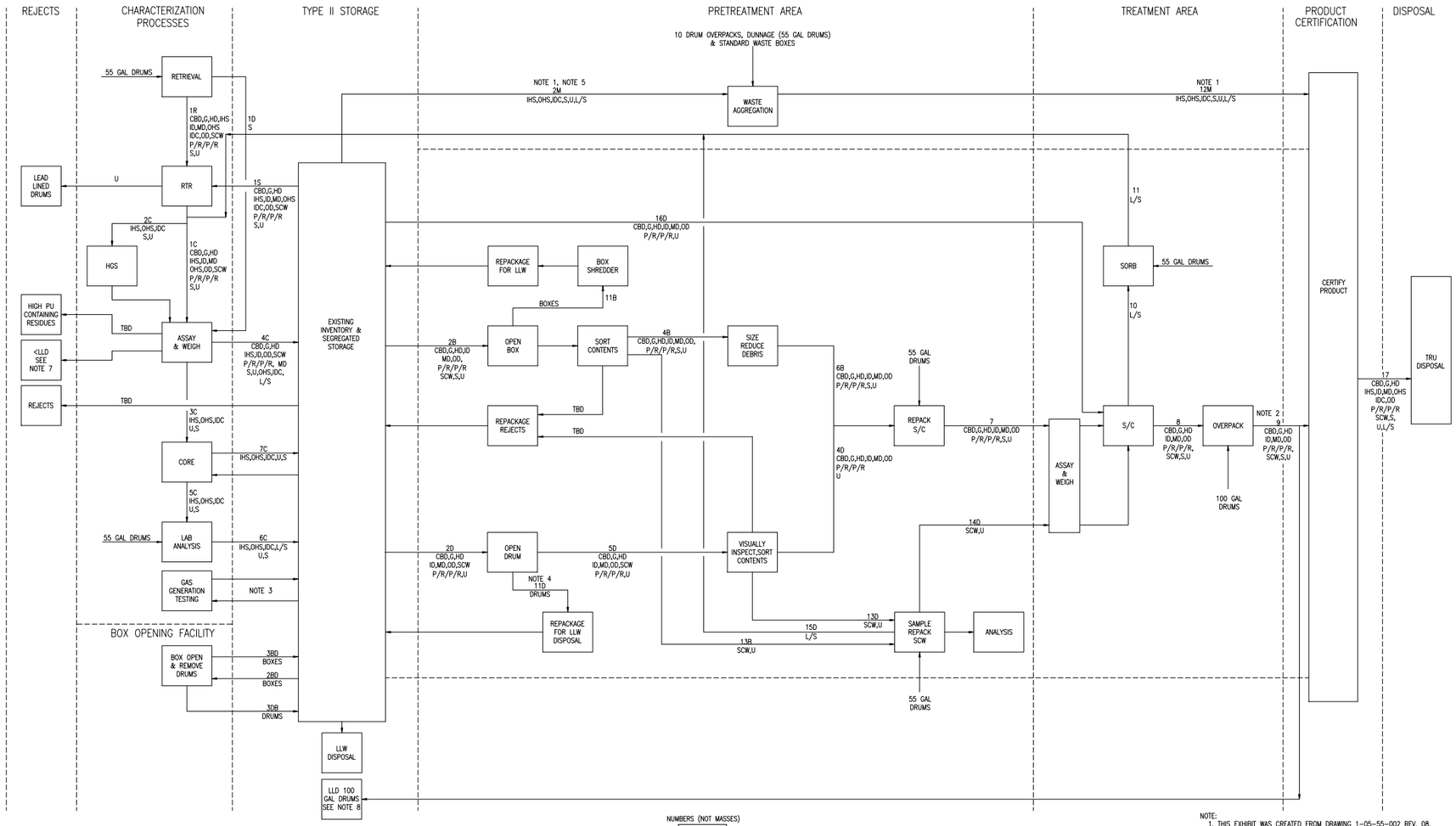


NOTE:
1. THIS EXHIBIT WAS CREATED FROM DRAWING 1-05-55-002 REV. 08.

MASS (Kg)

NUMBERS (NOT MASSES)

| WASTE CATEGORY | MASS (Kg/M³) | TOTAL | % DRUMS | DRUMS | %BOX/ BIN | BOX/ BIN | 1R | 1S | 1C | 1D | 2C | 3C | 4C | 5C | 6C | 7C | 2BD | 3DB | 3BD | 2B | 2D | 16D | 2M | 11B | 11D | 4B | 5D | 13B | 13D | 15D | 6B | 4D | 7 | 14D | 10 | 11 | 8 | 12M | 9 | 17 | TREATMENT |
|---|---|---|---|---|---|---|---|---|---|---|---|---|---|---|---|---|---|---|---|---|---|---|---|---|---|---|---|---|---|---|---|---|---|---|---|---|---|---|---|---|---|
| CERAMIC/BRICK DEBRIS (CBD) | | 207,870 | 1.24 | 183,020 | 0.21 | 24,850 | 184,023 | 23,847 | 207,870 | – | – | – | 221,302 | – | – | – | – | – | – | 24,850 | 31,852 | 151,168 | – | 6,742 | 5,435 | 18,108 | 26,417 | – | – | – | 18,108 | 26,417 | 58,255 | – | – | – | 209,423 | – | 224,227 | 224,227 | – |
| GRAPHITE (G) | | 263,516 | 1.78 | 262,634 | 0.01 | 882 | 146,992 | 116,524 | 263,516 | – | – | – | 280,634 | – | – | – | – | – | – | 882 | 52,392 | 210,242 | – | 266 | 11,023 | 616 | 41,369 | – | – | – | 616 | 41,369 | 53,335 | – | – | – | 263,577 | – | 286,718 | 286,718 | – |
| HETROGENOUS DEBRIS (HD) | | 1,692,842 | 3.83 | 564,454 | 9.70 | 1,128,388 | 1,555,542 | 137,300 | 1,692,842 | – | – | – | 1,802,671 | – | – | – | – | – | – | 1,128,388 | 68,770 | 495,684 | – | 258,225 | 16,196 | 870,163 | 52,575 | – | – | – | 870,163 | 52,575 | 1,256,624 | – | – | – | 1,752,308 | – | 1,918,713 | 1,918,713 | – |
| INORGANIC HOMOGENOUS SOLID (IHS) | | 9,065,296 | 60.05 | 8,845,816 | 1.89 | 219,480 | 5,480,197 | 3,585,099 | – | – | 9,063,350 | 103,355 | 8,225,736 | 21 | 22 | 104,143 | 153 | 219,480 | 153 | – | – | – | 8,967,844 | – | – | – | – | – | – | – | – | – | – | – | – | – | – | 8,967,844 | – | 8,967,844 | 97,497 |
| INORGANIC DEBRIS (ID) | | 1,405,732 | 1.90 | 280,522 | 9.67 | 1,125,210 | 1,116,077 | 289,655 | 1,405,732 | – | – | – | 1,497,002 | – | – | – | – | – | – | 1,125,210 | 43,389 | 237,133 | – | 370,882 | 16,654 | 754,328 | 26,735 | – | – | – | 754,328 | 26,735 | 1,254,008 | – | – | – | 1,491,141 | – | 1,716,355 | 1,716,355 | – |
| METAL DEBRIS (MD) | | 6,578,006 | 3.78 | 556,386 | 51.76 | 6,021,620 | 5,613,703 | 964,303 | 6,578,006 | – | – | – | 7,005,550 | – | – | – | – | – | – | 6,021,620 | 84,851 | 471,535 | – | 1,327,849 | 22,525 | 4,693,771 | 62,326 | – | – | – | 4,693,771 | 62,326 | 6,412,258 | – | – | – | 6,883,793 | – | 7,612,684 | 7,612,684 | – |
| ORGANIC HOMOGENOUS SOLID (OHS) (EXCLUDING IDC 003) | | 276,656 | 1.88 | 276,656 | 0.00 | – | 169,025 | 107,631 | – | – | 275,738 | 3,722 | 251,425 | – | – | 3,181 | – | – | – | – | – | – | 276,658 | – | – | – | – | – | – | – | – | – | – | – | – | – | – | 276,658 | – | 276,658 | – |
| IDC 003 (IDC) | | 1,640,500 | 11.02 | 1,623,300 | 0.15 | 17,200 | 1,156,140 | 484,360 | – | – | 1,640,500 | 109,676 | 230,351 | 72 | 68 | 110,531 | 12 | 17,200 | 12 | – | – | – | 178,704 | – | – | – | – | – | – | – | – | – | – | – | – | – | – | 178,704 | – | 178,704 | 1,461,935 |
| ORGANIC DEBRIS (OD) | | 1,037,957 | 1.32 | 194,557 | 7.25 | 843,400 | 814,160 | 223,797 | 1,037,957 | – | – | – | 1,105,458 | – | – | – | – | – | – | 843,400 | 23,250 | 171,307 | – | 305,239 | 9,473 | 538,161 | 13,777 | – | – | – | 538,161 | 13,777 | 936,943 | – | – | – | 1,108,250 | – | 1,284,767 | 1,284,767 | – |
| PAPER/RAGS/PLASTIC/RUBBER (P/R/P/R) | | 3,615,597 | 9.91 | 1,460,285 | 18.53 | 2,155,312 | 2,754,689 | 860,908 | 3,615,597 | – | – | – | 3,850,314 | – | – | – | – | – | – | 2,155,312 | 209,504 | 1,250,781 | – | 758,974 | 76,176 | 1,396,338 | 133,328 | – | – | – | 1,396,338 | 133,328 | 2,539,598 | – | – | – | 3,725,379 | – | 4,274,109 | 4,274,109 | – |
| SPECIAL CASE WASTE (SCW) | | 123,582 | 0.73 | 107,415 | 0.14 | 16,167 | 104,207 | 19,375 | 123,582 | – | – | – | 131,346 | – | – | – | – | – | – | 16,167 | 107,415 | – | – | 3,193 | 16,916 | – | 90,499 | 12,974 | 90,499 | – | – | – | – | 111,645 | – | – | – | 111,645 | – | 120,345 | 120,345 | – |
| SOILS (S) | | 3,657,269 | 2.55 | 3,576,269 | 0.70 | 81,000 | 223,546 | 15,454 | 198,705 | 3,418,269 | 94,065 | 3,238 | 3,861,991 | – | – | 2,396 | – | – | – | 81,000 | – | – | 3,576,269 | 11,000 | – | 70,000 | – | – | – | – | 70,000 | – | 83,533 | – | – | – | 83,533 | 3,576,269 | 89,182 | 3,665,451 | – |
| UNKNOWN (U) (i.e. Pre 1973) | | 5,542,340 | | 5,474,740 | | 67,600 | 5,366,222 | 176,118 | 702,411 | – | 17,686,435 | 58,279 | 5,107,350 | 53 | 59 | 57,878 | >280 | 222,235 | >280 | 66,225 | 471,335 | 870,014 | 4,135,021 | 22,018 | 110,971 | 44,162 | 360,364 | 45 | 2,628 | – | 44,162 | 357,736 | 529,134 | 13,169 | – | – | 1,412,317 | 4,135,021 | 1,637,249 | 5,772,271 | – |
| LIQUID/SORBENT (L/S) | | | | | | | – | – | – | – | – | – | – | – | 2,017 | – | – | – | – | – | – | – | 44,766 | – | – | | | – | – | 13,000 | – | – | – | – | 65,000 | 65,000 | – | 265,304 | – | 265,304 | – |
| | | | | | | | | | | | | | | | | | | | | | | | | | | | | | | | | | | | | | | | | | |
| | | | | | | | | | | | | | | | | | | | | | | | | | | | | | | | | | | | | | | | | | |
| TOTAL | | 35,107,163 | 100.00 | 23,406,054 | 100.00 | 11,701,109 | 24,684,523 | 7,004,371 | 15,826,218 | 3,418,269 | 28,760,088 | 278,270 | 33,571,130 | 146 | 2,166 | 278,129 | >445 | 458,915 | >445 | 11,463,054 | 1,092,759 | 3,857,863 | 17,179,262 | 3,064,389 | 285,368 | 8,385,646 | 807,390 | 13,019 | 93,127 | 13,000 | 8,385,646 | 714,264 | 3,123,688 | 124,814 | 65,000 | 183,781 | 17,041,365 | 17,399,799 | 19,164,350 | 36,564,149 | 1,559,432 |

# Exhibit I-2: Process Flow Sheet (Mass Balance)

# APPENDIX II

## WMF-634 DRAWINGS, EXHIBIT, AND TOPOGRAPHIC MAP

| Item Number | Description | Drawing or Exhibit Number | Revision Number/ Date | PE Certification Date | Revision Approval Date |
|---|---|---|---|---|---|
| 1 | Type II Module (WMF-634) Characterization Facility Permit General Arrangement | 53-10374 | 05 | 02/03/15 | 02/03/15 |
| 2 | Type II Module (WMF-634) Characterization Facility Sections Sheet 1 | 53-10375 | 01 | 06/28/06 | 06/29/06 |
| 3 | AMWTP Traffic Flow | II-1 | 07 | Not Applicable | Not Applicable |
| 4 | RWMC/AMWTP Topographic Map | Not Applicable | Not Applicable | Not Applicable | 03/28/16 |
| 5 | WMF-634 Facility Arrangement and Grading Plan | 52-1900 | 09 | 06/28/06 | 06/29/06 |
| 6 | WMF-634 Type II Module Electrical One Line Diagram Permit Exhibit | 54-9926 | 07 | 02/03/15 | 02/03/15 |
| 7 | Site Utilities | 56-1901 | 18 | 11/30/15 | 11/30/15 |

Appendix II
WMF-634 Drawings, Exhibit, and
Topographic Map
(Items 1, 2, 4, 5, 6, 7)

The large, fold-out drawings and topographic map are not available in electronic form; however, hard copies can be requested from the
Idaho Department of Environmental Quality

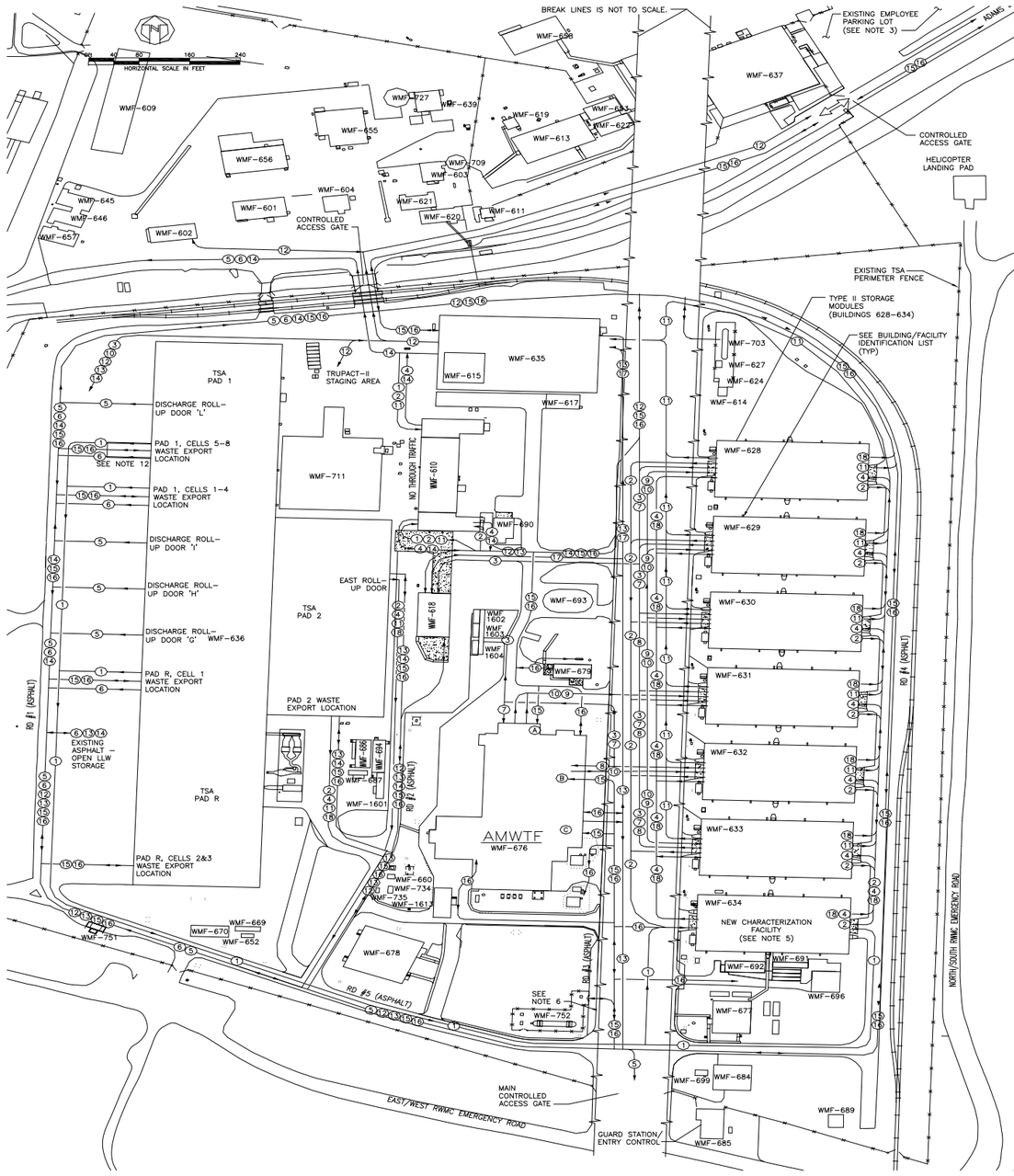


## BUILDING/FACILITY IDENTIFICATION LIST

| NUMBER | BUILDING/FACILITY NAME |
|---|---|
| WMF-601 | RADCON FIELD OFFICE |
| WMF-602 | RWMC HIGH BAY |
| WMF-603 | PUMP HOUSE |
| WMF-604 | CHANGE HOUSE AND LUNCH ROOM |
| WMF-609 | HEAVY EQUIPMENT STORAGE SHED |
| WMF-610 | STORED WASTE EXAMINATION PILOT PLANT (SWEPP) |
| WMF-611 | OFFICE FACILITY |
| WMF-613 | WMF OFFICE & OPERATIONAL BUILDING |
| WMF-614 | PROPANE VAPORIZER HOUSING |
| WMF-615 | TYPE I MODULE DRUM VENT SYSTEM |
| WMF-617 | MAINTENANCE FACILITY |
| WMF-618 | EXISTING TRUPACT-II LOADING FACILITY |
| WMF-619 | COMMUNICATION BUILDING |
| WMF-620 | WORK CONTROL CENTER TRAILER |
| WMF-621 | WORK CONTROL SUPPORT TRAILER |
| WMF-622 | OFFICE ANNEX TRAILER |
| WMF-624 | FIRE RISER ENCLOSURE |
| WMF-627 | PROPANE PUMP ENCLOSURE |
| WMF-628 | TYPE II STORAGE MODULE #1 |
| WMF-629 | TYPE II STORAGE MODULE #2 |
| WMF-630 | TYPE II STORAGE MODULE #3 |
| WMF-631 | TYPE II STORAGE MODULE #4 |
| WMF-632 | TYPE II STORAGE MODULE #5 |
| WMF-633 | TYPE II STORAGE MODULE #6 |
| WMF-634 | TYPE II STORAGE MODULE #7 (CHARACTERIZATION FACILITY) |
| WMF-635 | TYPE I MODULE |
| WMF-636 | TSA RETRIEVAL ENCLOSURE |
| WMF-637 | OPERATIONS CONTROL BUILDING (OCB) |
| WMF-639 | FIREWATER PUMP HOUSE #2 |
| WMF-645 | CONSTRUCTION SUPPORT TRAILER |
| WMF-646 | FIELD SUPPORT TRAILER |
| WMF-648 | ILTSF, TRAILER |
| WMF-651 | RADCON TRAILER |
| WMF-653 | OFFICE ANNEX #2, TRAILER |
| WMF-655 | MATERIAL HANDLING FACILITY |
| WMF-657 | CONSTRUCTION FIELD SUPPORT TRAILER |
| WMF-656 | MAINTENANCE SHOP |
| WMF-658 | DOE/RWMC OFFICE |
| WMF-660 | AUTOMATIC TRANSFER SWITCH BUILDING |
| WMF-676 | ADVANCED MIXED WAS TREATMENT FACILITY |
| WMF-677 | ES&H TRAILER |
| WMF-678 | AMWTP OFFICE COMPLEX |
| WMF-679 | MAINTENANCE SHOP |
| WMF-684 | BREAK TRAILER |
| WMF-685 | ACCOUNABILITY FACILITY |
| WMF-686 | SHOWER TRAILER |
| WMF-687 | RETRIEVAL BREAK TRAILER |
| WMF-688 | MAINTENANCE BREAK TRAILER |
| WMF-689 | ROLLING STOCK MAINTENANCE FACILITY |
| WMF-690 | MAINTENANCE SHACK |
| WMF-691 | WAREHOUSE OFFICE TRAILER |
| WMF-692 | SITE WAREHOUSE |
| WMF-693 | FACILITY MAINTENANCE SUPPLIES STORAGE |
| WMF-694 | TRAINING FACILITY |
| WMF-696 | CONSUMABLE STORAGE |
| WMF-699 | RESTROOM FACILITY |
| WMF-1601 | TRAINING FACILITY |
| WMF-1602 | BREAK TRAILER |
| WMF-1603 | BREAK TRAILER |
| WMF-1604 | OFFICE TRAILER |
| WMF-1613 | CONFERENCE ROOM TRAILER |
| WMF-703 | 30,000 GAL LIQUID PROPANE GAS TANK |
| WMF-709 | WATER STORAGE TANK |
| WMF-711 | AIR SUPPORT WEATHER SUPPORT |
| WMF-714 | ILTSF PAD 1 |
| WMF-720 | ILTSF PAD 2 |
| WMF-727 | FIRE WATER STORAGE TANK |
| WMF-734 | EMERGENCY GENERATOR |
| WMF-735 | FUEL TANK FOR EMERGENCY GENERATOR |
| WMF-752 | FLEET FUELING FACILITY |
| | AMWTP PROPANE STORAGE |

## LEGEND

- ROADS
- BUILDINGS
- TSA PERIMETER FENCE
- "OPERATIONS MATERIAL SUPPLY TRAFFIC" ACCESS POINT (ACCESS THROUGH THE OCB CONTROLLED ACCESS GATE); TWO-WAY TRAFFIC; SEE TABLE
- RAILROAD TRACKS
- WASTE FLOW PATH; FLOW PATTERN NO. 8 (SEE "WASTE MATERIAL RETRIEVAL AND TRANSFER TRAFFIC TABLE")

## ACRONYMS

| | |
|---|---|
| AMWTF | ADVANCED MIXED WASTE TREATMENT FACILITY |
| AMWTP | ADVANCED MIXED WASTE TREATMENT PROJECT |
| LLW | LOW LEVEL WASTE |
| D.O.E | DEPARTMENT OF ENERGY |
| RTR | REAL TIME RADIOGRAPHIC EXAMINATION |
| RWMC | RADIOACTIVE WASTE MANAGEMENT COMPLEX |
| SCW | SPECIAL CASE WASTE |
| TSA | TRANSURANIC STORAGE AREA |
| WIPP | WASTE ISOLATION PILOT PLANT |

## WASTE MATERIAL RETRIEVAL AND TRANSFER TRAFFIC TABLE

| FLOW PATTERN NUMBER | WASTE TRANSFER ROUTE | VEHICLE TYPE | AVERAGE NO. OF VEHICLE TRIPS PER DAY DS=DRUM SHIPMENT BS=BOX/BIN SHIPMENT (YEAR 1) | (YEARS 2-6) | (YEARS 7-10) | (YEAR 11) |
|---|---|---|---|---|---|---|
| 1 | RETRIEVED WASTE AND DRUMMED CONTAMINATED SOIL FROM TSA-RE TO CHARACTERIZATION FACILITY (WMF-610, -634) FOR CHARACTERIZATION | NON-AUTOMATED TRAILER WITH TOW VEHICLE | 2.5 DS 2.0 BS | 5.5 DS 2.0 BS | 0 DS 0 BS | 0 DS 0 BS |
| 2 | WASTE FROM TYPE II STORAGE MODULES & TSA-RE PAD 2 TO CHARACTERIZATION FACILITY (WMF-610,-634) FOR CHARACTERIZATION | NON-AUTOMATED TRAILER WITH TOW VEHICLE | 3.0 DS 1.0 BS | 3.0 DS 1.0 BS (YEAR 2 ONLY) | 0 DS 0 BS | 0 DS 0 BS |
| 3 | CHARACTERIZED SLUDGE DRUMS, SCW, ABSORBED LIQUIDS, AND REPACKAGED NON-COMPACTED DRUMS FROM TYPE II STORAGE TO WASTE AGGREGATION (WMF-618) | NON-AUTOMATED TRAILER WITH TOW VEHICLE | 2.3 DS | 2.3 DS | 2.3 DS | 2.3 DS |
| 4 | CHARACTERIZED RETRIEVED WASTE, CONTAMINATED SOIL, AND EXISTING WASTE FROM CHARACTERIZATION FACILITY (WMF-610,-634) TO TYPE II STORAGE MODULES & TSA-RE PAD 2 FOR STORAGE | NON-AUTOMATED TRAILER WITH TOW VEHICLE | 4.9 DS 2.0 BS | 4.9 DS 2.0 BS | 0 DS 0 BS | 0 DS 0 BS |
| 5 | UNCONTAMINATED SOIL FROM RETRIEVAL TO DISPOSAL | TRUCK AND BOTTOM DUMP TRAILERS / DUMP TRUCK | 16 PEAK 1.0 AVG | 16 PEAK 1.0 AVG | 0 PEAK 0 AVG | 0 PEAK 0 AVG |
| 6 | RETRIEVED PLYWOOD, CLEATS, LLW, AND TARPS FROM TSA-RE TO DISPOSAL OR OPEN STORAGE | FORK LIFT / NON-AUTOMATED TRAILER WITH TOW VEHICLE | 8.0 PEAK 1.0 AVG | 8.0 PEAK 1.0 AVG | 0 PEAK 0 AVG | 0 PEAK 0 AVG |
| 7 | DRUM WASTE FROM TYPE II STORAGE MODULES TO AMWTF FOR PRETREATMENT AND PROCESSING (INCLUDES REMAINDER OF WASTE CURRENTLY STORED BY THE M&O AND IDENTIFIED SCW) | ENCLOSED AUTOMATED TRAILER WITH TOW VEHICLE | 0 DS | 1.7 DS | 1.7 DS | 0 DS |
| 8 | BOX WASTE FROM TYPE II STORAGE MODULES TO AMWTF FOR PRETREATMENT AND PROCESSING (INCLUDES REMAINDER OF WASTE CURRENTLY STORED BY THE M&O) | ENCLOSED AUTOMATED TRAILER WITH TOW VEHICLE | 0 BS | 1.3 BS | 1.3 BS | 0 BS |
| 9 | | ENCLOSED AUTOMATED TRAILER WITH TOW VEHICLE | 0 DS | 1.9 DS | 1.9 DS | 0 DS |
| 10 | CHARACTERIZED REPACKAGED WASTE AND SCW FROM AMWTF TO TYPE II STORAGE MODULES FOR INTERIM STORAGE | ENCLOSED AUTOMATED TRAILER WITH TOW VEHICLE | 0 DS | 0.4 DS | 0.4 DS | 0 DS |
| 11 | PRODUCT DRUMS FROM TYPE II STORAGE MODULES, TSA-RE & WMF-628 TO TYPE I MODULE FOR HEADSPACE GAS SAMPLING (AS NECESSARY), LOAD ASSEMBLY, & LOAD CERTIFICATION | ENCLOSED NON-AUTOMATED TRAILER WITH TOW VEHICLE | 0 DS | 1.5 DS | 1.5 DS | 1.5 DS |
| 12 | ASSEMBLED TRUPACT-II LOADS FROM WMF-618 OR WMF-635 TO WIPP | TRUPACT-II TRANSPORTER | 1.3 | 2.5 | 2.5 | 2.5 |
| 13 | PLANT LLW FROM AMWTF TO TYPE I MODULE | ENCLOSED AUTOMATED TRAILER WITH TOW VEHICLE | 0 | 1.0 COMBINED SHIPMENT | 1.0 COMBINED SHIPMENT | 0 |
| 14 | PLANT LLW FROM TYPE I MODULE | FORK LIFT / NON-AUTOMATED TRAILER WITH TOW VEHICLE | 0 | 1.0 | 1.0 | 0 |
| 15 | CLEAN DRUM, BOX, OR TDOP DELIVERY TO AMWTF, WMF-618, WMF-635, AND WMF-636 | STANDARD HIGHWAY TRUCK | SEE CLEAN CONTAINER SUPPLY TRAFFIC TABLE (BELOW) | | | |
| 16 | OPERATIONS MATERIAL SUPPLY DELIVERY TO AMWTF | STANDARD HIGHWAY TRUCK | SEE OPERATIONS MATERIAL SUPPLY TRAFFIC TABLE (BELOW) | | | |
| 17 | ASSEMBLED TEN-DRUM OVER PACKS FOR LOADING INTO TRUPACT-II CASKS FROM WMF-618 TO TYPE I MODULE OR FROM TYPE I MODULE TO WMF-618 | FORK LIFT / NON-AUTOMATED TRAILER WITH TOW VEHICLE | 3.9 | 3.9 | 3.9 | 3.9 |
| 18 | REJECT WASTE RETURNED TO D.O.E. | FORKLIFT OR FLATBED TRUCK (ONE CONTAINER AT A TIME) | 1 DRUM OR BOX | 1 DRUM OR BOX | 1 DRUM OR BOX | 1 DRUM OR BOX |

ASSUMPTIONS AND NOTES:

1. TRANSPORT TRAILERS (20,000 LB CAPACITY) CARRY THREE BOXES (AVERAGE); SIXTEEN 55-GALLON DRUMS; OR FOURTEEN 100-GALLON PUCK DRUMS. ONE BOX IS 3.17 $m^3$; ONE 55-GALLON DRUM IS 0.208 $m^3$. THE LOAD CAPACITY OF OTHER FLAT BED TRAILERS AND TRUCKS MUST BE VERIFIED PRIOR TO USE.
2. OPERATING BASIS FOR RETRIEVAL OPERATIONS IS 365 DAYS/YEAR, 24 HOURS/DAY FOR 6 YEARS. RETRIEVAL STARTS ONE YEAR BEFORE THE AMWTF BEGINS OPERATION. EXISTING WASTE (CURRENTLY INCLUDES 31,721 DRUMS AND 1,893 BOXES) STORED IN THE TYPE II STORAGE MODULES IS CHARACTERIZED DURING YEARS 1 AND 2 OF RETRIEVAL OPERATIONS.
3. OPERATING BASIS FOR AMWTF OPERATIONS IS 330 DAYS/YEAR, 24 HOURS/DAY FOR 9 YEARS.
4. OPERATING BASIS FOR WASTE AGGREGATION AND TRU-PACT II CASK LOADING AND SHIPPING OPERATIONS IS 255 DAYS/YEAR, 24 HOURS/DAY FOR 11 YEARS.
5. OPERATING BASIS FOR CHARACTERIZATION AND STORAGE OPERATIONS IS 330 DAYS/YEAR, 24 HOURS/DAY FOR 6 YEARS.
6. UNCONTAMINATED SOIL REMOVAL OPERATIONS ARE DONE FOR ONE SHIFT/DAY AND ARE PERFORMED ON AN INTERMITTENT BASIS.
7. BOTTOM DUMP TRAILERS REMOVING UNCONTAMINATED SOIL HAVE A 15 $yd^3$ CAPACITY.
8. WASTE VOLUME BASIS IS 65,000 $m^3$ (ESTIMATED WASTE CURRENTLY LOCATED AT THE TSA, WHICH INCLUDES 154,874 DRUMS AND 11,064 BOXES).
9. TRUPACT-II SHIPPING CASKS ARE AVAILABLE IN FULL- AND HALF-SIZE CASKS. SHIPMENTS TO WIPP OCCUR OVER 11 YEARS, BEGINNING AT THE START OF RETRIEVAL AND ENDING ONE YEAR AFTER PLANT OPERATIONS ARE COMPLETED.
10. A TRUCK SHIPMENT TO WIPP CONTAINS THREE TRUPACT-II SHIPPING CASKS, FULL- OR HALF-SIZE, IN ANY COMBINATION. 6,496 SHIPMENTS TO WIPP ARE ESTIMATED.
11. FULL-SIZE TRUPACT-II SHIPPING CASKS WILL TYPICALLY CONTAIN SIX 100-GALLON PUCK DRUMS; TEN 55-GALLON DRUMS; OR ONE TEN-DRUM OVER PACK (TDOP) CONTAINING EITHER TEN 55-GALLON DIRECT-SHIP DRUMS OR TWO STANDARD WASTE BOXES.
12. HALF-SIZE TRUPACT-II SHIPPING CASKS WILL TYPICALLY CONTAIN THREE 100-GALLON PUCK DRUMS; FIVE 55-GALLON DRUMS; OR ONE STANDARD WASTE BOX.

NOTES:

1. OPERATIONS MATERIAL SUPPLY HAS MULTIPLE DESTINATIONS WITHIN THE AMWTP. SEE THE MATERIAL RETRIEVAL AND TRAFFIC TABLE TO THIS EXHIBIT.
2. REMOVED.
3. TYPE II STORAGE MODULE WMF-634 WILL BE CONVERTED TO THE CHARACTERIZATION FACILITY.
4. REMOVED.
5. WMF-618 WILL BE USED FOR AMWTP WASTE AGGREGATION OPERATIONS.
6. PERMIT EXHIBIT CREATED FROM DRAWING 53-1901 REV. 12.

## CLEAN CONTAINER SUPPLY TRAFFIC TABLE

| DESTINATION | CONTAINER | AVERAGE CONTAINERS PER DAY |
|---|---|---|
| AMWTF - A | PUCK DRUM | 30 |
| | 55-GALLON DRUM | 8 |
| AMWTF - B | 55-GALLON DRUM | 60 |
| AMWTF - C | 55-GALLON DRUM | 1 |
| | BOX | 3 |
| TSA-RE | 55-GALLON DRUM | 8 |
| | BOX | 2 |
| WMF-618 | TEN-DRUM OVER PACK | 3 |

## OPERATIONS MATERIAL SUPPLY TRAFFIC TABLE

| MATERIAL | DESTINATION | ANNUAL AVERAGE TRIPS PER WEEK |
|---|---|---|
| BOTTLED COMPRESSED GAS | AMWTF,WMF-610,-628,-634, -635 | 0.5 |
| LIQUID PROPANE GAS | PROPANE STORAGE | 0.5 |
| OFFICE MATERIALS MISC. CONSUMABLES | WMF-634,MAINT. SHOP | 1 |
| | AMWTF,WMF-634,-635 | |
| | AMWTF,TSA-RE,WMF-634, | 1 |
| PPE | WMF-635,MAINT. SHOP | |
| | AMWTF,TSA-RE | 1 |
| DIESEL FUEL | WMF-634,-635 | |
| | AMWTF,TSA-RE,WMF-634, | 0.5 |
| MAINTENANCE MATERIALS | MAINT. SHOP | |
| | TSA-RE,WMF-634,MAINT. | 1 |
| | SHOP TOTAL | 5.5 |

Exhibit II-1 AMWTP Traffic Flow

# APPENDIX III

## Type II Module Drawings

| Item Number | Description | Drawing Number | Revision Number | PE Certification Date | Revision Approval Date |
|---|---|---|---|---|---|
| 1 | Type II Module (WMF-629 Thru 633) General Arrangement | 51-9907 | 04 | 06/28/06 | 06/29/06 |
| 2 | Type II Module (WMF-629 Thru 633) Elevations and Sections | 51-9913 | 02 | 06/28/06 | 06/29/06 |
| 3 | Type II Module (WMF-628 Thru 633) Grading Plan | 52-9501 | 03 | 06/28/06 | 06/29/06 |
| 4 | Type II Module (WMF-629) Electrical One Line Diagram | 54-9760 | 06 | 02/26/08 | 02/26/08 |
| 5 | Type II Module (WMF-630 & WMF-631) Electrical One Line Diagram | 54-9715 | 02 | 06/29/06 | 06/29/06 |
| 6 | Type II Module (WMF-632) Electrical One Line Diagram | 54-9716 | 02 | 06/29/06 | 06/29/06 |
| 7 | Type II Module (WMF-633) Electrical One Line Diagram | 54-9717 | 02 | 06/29/06 | 06/29/06 |
| 8 | Site Utilities North | 56-9500 | 10 | 05/20/15 | 05/20/15 |

Appendix III
Type II Module Drawings
(Items 1 - 8)

These large, fold-out drawings are not available in electronic form; however, hard copies can be requested from the
Idaho Department of Environmental Quality