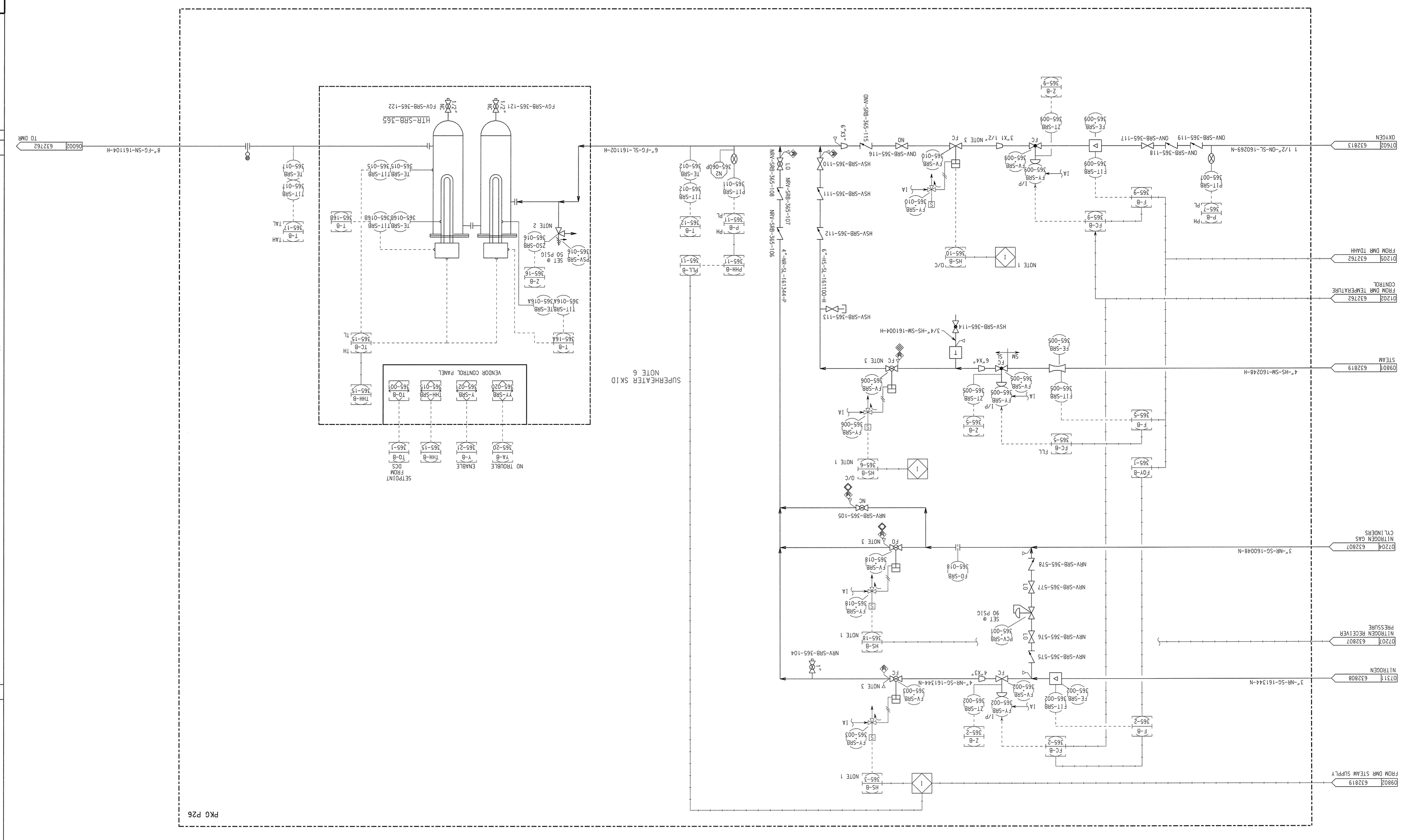

SIZE	FOR DRAWING INDEX SEE DRAWING NO.
E	200-1696-24-923-632756

I & C					
HVAC					
GEN. ARRANG.					
ENVIRON.					
ELECTRICAL					
CIVIL					
ARCH.					
DISCIPLINE	BY	DATE	DISCIPLINE	BY	DATE

REVISION APPROVAL RECORD			
DISCIPLINE	BY	DATE	DISCIPLINE
ARCH.	—		MECHANICAL
CIVIL	—		NUCLEAR
ELECTRICAL			PIPING
ENVIRON.	—		PROCESS
GEN. ARRANG.			QA / QC
HVAC			STRUCTURAL
I & C			REMOTE HDL.
			SYS. ENG.

REV	DATE	BY	DRAWING STATUS				
0			ISSUED	REV	DATE	LDE	PEM
			PRELIMINARY	G	09/22/06	RLH	NDA
			APPROVED FOR CONSTRUCTION	0			
			NOT APPROVED FOR CONSTRUCTION UNLESS SIGNED & DATED. DESTROY ALL PRINTS BEARING EARLIER DATE &/OR REV.NO.				

STATE OF IDAHO REGISTERED PROFESSIONAL ENGINEER WILLIAM HENSON 7720

THOR Treatment Technologies

SCALE: NONE	MFG 10/20/06	PROJECT NO. 28276
DRAWN: GRW	DATE 02/01/05	MBS: P.1.04.03.02
DESIGNED:	DATE 5/1/05	SYSTEM: QUALITY LEVEL: 2
CHECKED:	DATE 10/10/06	DRAWING NUMBER 632801 REV 0
APPROVED:	DATE 10/10/06	
VERIFIED:	DATE 10/10/06	
APPROVED:	DATE	

CAD FILE NAME: 632801.pid

INDEX CODE NUMBER				
AREA	TYPE	SL	DWG	SHEET
200	1696	24	923	P-52

eeer6rVZCDrf#28276#ocdPdd2dqOrM632801.pid

Washington Group International
7800 E. Union Ave. – Denver, CO 80237 – (303) 843-2000

IDAHO CLEANUP PROJECT
INTEGRATED WASTE TREATMENT UNIT

PIPING & INSTRUMENT DIAGRAM
DMR FLUID GAS SYSTEM

DRAWING NO.	DRAWING TITLE

REFERENCE DRAWINGS

1. SUPERHEATER HTR-SRB-365.
2. ALL PIPING, VALVES AND INSTRUMENTATION ON THE FOLLOWING LINES:
   - DOWNSTREAM OF HTR-SRB-365.
   - DOWNSTREAM OF AND INCLUDING FV-SRB-365-010 & FY-SRB-365-010.
   - DOWNSTREAM OF AND INCLUDING FV-SRB-365-006 & FY-SRC-365-006.
   - LINE FROM N2 CYLINDER & ALL INSTRUMENT & VALVES.
   - DOWNSTREAM OF AND INCLUDING FV-SRB-365-003 & FY-SRB-365-003.
   - FGV-SRB-365-121 & FGV-SRC-365-122.

SAFETY SIGNIFICANT ITEMS:
1. SUPERHEATER HTR-SRB-365.
2. ALL PIPING, VALVES AND INSTRUMENTATION ON THE FOLLOWING LINES:
   - DOWNSTREAM OF HTR-SRB-365.

NOTES

1. SEE RSS SHUTDOWN MATRIX P&ID 632755.
2. VENT TO 4 PACK
3. DENOTES VALVES HAVING POSITION SWITCHES SHOWN IN "TYPICAL POSITION SWITCH" SEETCH, SEE DWG. 632758.
4. P&ID INTENT IS NOT TO SHOW ALL POSSIBLE DCS LOGIC/ALARM SUCH AS ZA ALARMS.
5. DELETED
6. FINAL VENDOR EQUIPMENT P&ID TAGS TO BE DETERMINED AFTER VENDOR SELECTION.
7. CHANGED INSTRUMENT AND VALVE TAG NUMBERS PER MCP-3785 AND EQUIPMENT TAG NUMBERS PER CON-IWTU-115.

REV	DATE	DESCRIPTION	BY/CHKD
0	10/10/06	ISSUED FOR DESIGN FREEZE	

632801