632759

P-NCC-202
WASTE TRANSFER
PUMP
DESIGN FLOWRATE:
NORMAL DISCHARGE PRESSURE:
MOTOR SIZE:

P-NCC-203
WASTE TRANSFER
PUMP
DESIGN FLOWRATE:
NORMAL DISCHARGE PRESSURE:
MOTOR SIZE:

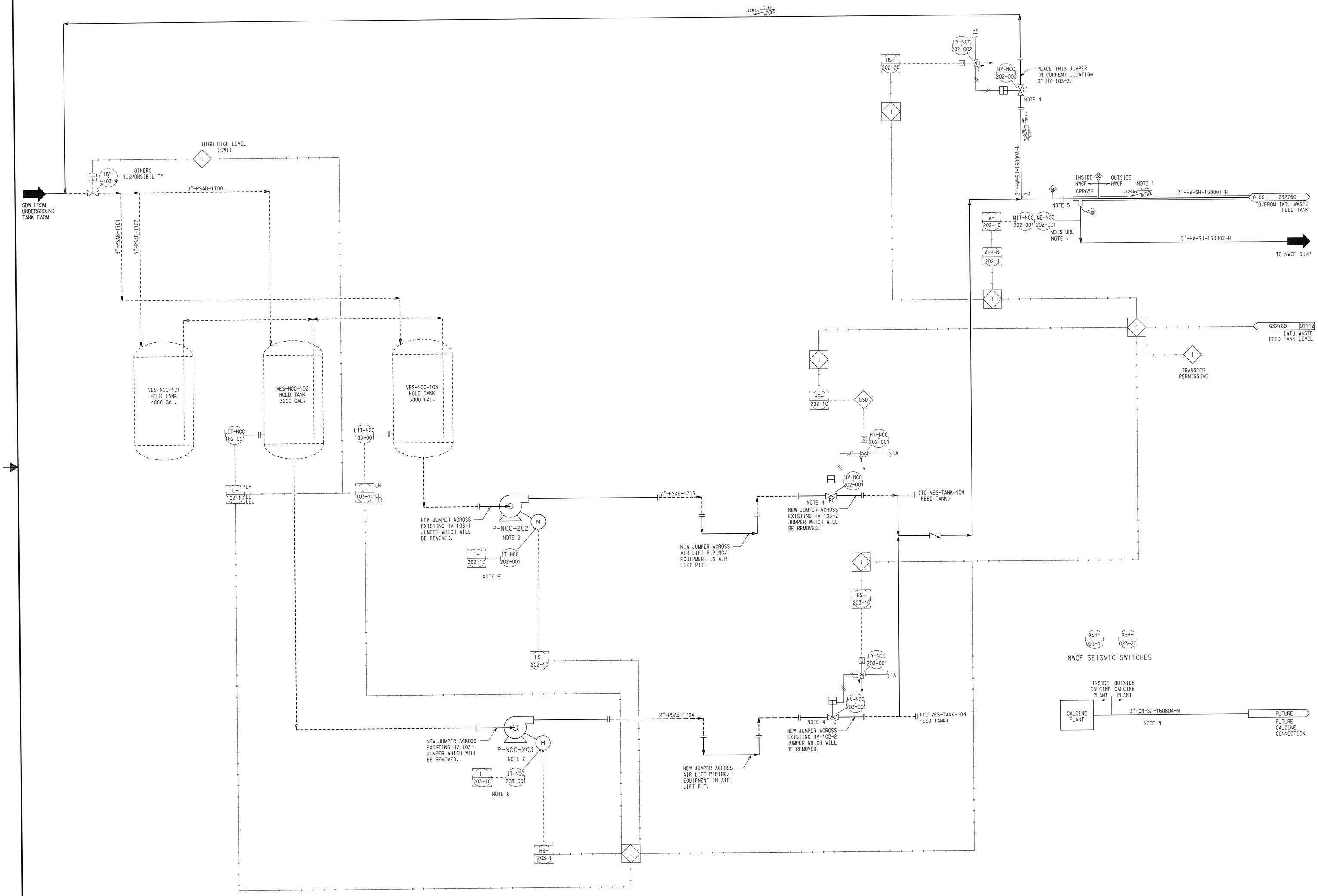

REV	DATE	DESCRIPTION	By/Chk'd
0	10/12/06	ISSUED FOR DESIGN FREEZE	

NOTES

1. WASTE FEED LINE IS SLOPED TOWARD NWCF FACILITY TO RETURN/COLLECT ANY SBW LIQUIDS LEAKING FROM INNER PIPE OF DOUBLE PIPE SYSTEM. LEAK DETECTION PROVIDED.
2. TRANSFER OF SBW FROM NWCF TO IWTU WASTE FEED TANK (WFT) WILL BE PERFORMED MANUALLY. REMOTE START OF PUMPS. REMOTE OPENING OF TRANSFER VALVES WILL BE PROVIDED FROM THE IWTU DCS. LOW-LOW LEVEL IN NWCF HOLD TANK OR HIGH LEVEL IN WFT WILL TRIP WASTE TRANSFER PUMPS.
3. REFERENCE NWCF P&ID No. 1495-CPP-659-F-11 SHEETS 1.2. AND 3 OF 4 AND 635083.
4. DENOTES VALVES HAVING POSITION SWITCHES SHOWN IN "TYPICAL POSITION SWITCH" SKETCH ON DWG. 632758.
5. SPECTACLE BLIND FOR ISOLATION DURING CONSTRUCTION.
6. SEE TYPICAL MOTOR SCHEMATIC ON 632758.
7. SAMPLE AND ANALYSIS OF SBW FEED CONDUCTED PRIOR TO TRANSFER OF SBW TO IWTU MAY INCLUDE CHARACTERIZATION OF RADIONUCLIDES AND CHEMICAL CONSTITUENTS.
8. DOUBLE CONTAINMENT PIPE WITH BLOCK FITTINGS.

SAFETY SIGNIFICANT ITEMS:

NONE

REFERENCE DRAWINGS

DRAWING NO.	DRAWING TITLE

IDAHO CLEANUP PROJECT
INTEGRATED WASTE TREATMENT UNIT

PIPING & INSTRUMENT DIAGRAM SBW WASTE TRANSFER

Washington Group International
7800 E. Union Ave. - Denver, CO 80237 - (303) 843-2000

REVISION APPROVAL RECORD				REV 0	
DISCIPLINE	BY	DATE	DISCIPLINE	BY	DATE
ARCH.	—	—	MECHANICAL		10/12/06
CIVIL	—	—	NUCLEAR	—	—
ELECTRICAL		10/12/06	PIPING		10/12/06
ENVIRON.	—	—	PROCESS	RCH	10/12/06
GEN. ARRANG.		10/12/06	QA / QC		10-12-06
HVAC		10/12/06	STRUCTURAL		10-12-06
I & C		10-12-06	REMOTE HDL.	—	—
			SYS. ENG.		10-12-06

DRAWING STATUS					
ISSUED	REV	DATE	LDE	PEM	
PRELIMINARY	G	09/22/06	RLH	NDA	
APPROVED FOR CONSTRUCTION	0	10/12/06	RCH		

NOT APPROVED FOR CONSTRUCTION UNLESS SIGNED & DATED. DESTROY ALL PRINTS BEARING EARLIER DATE &/OR REV.NO.

PROFESSIONAL ENGINEER REGISTERED 7720 STATE OF IDAHO THOMAS WILLIAM NELSON 10/13/06

Thor Treatment Technologies

SCALE: NONE	APPROVED 10/12/06	PROJECT NO. 28276	
DRAWN: CRW	DATE 02/01/05	WBS: P.1.04.03.02	
DESIGNED:	DATE 10/6/06	SYSTEM:	QUALITY LEVEL: 3
CHECKED:	DATE 10/12/06	DRAWING NUMBER 632759	REV 0
VERIFIED:	DATE 10-12-06		
APPROVED:	DATE		
CAD FILE NAME: 632759.pid		INDEX CODE NUMBER: AREA 200, TYPE 1696, CL 24, ORIG 923	SHEET P-10

SIZE	FOR DRAWING INDEX SEE DRAWING NO.
E	200-1696-24-923-632756

\\arcsv020b\#f\#28276\#cad\#pds2d\#dgn\#632759.pid
12-OCT-2006 12:58