632484

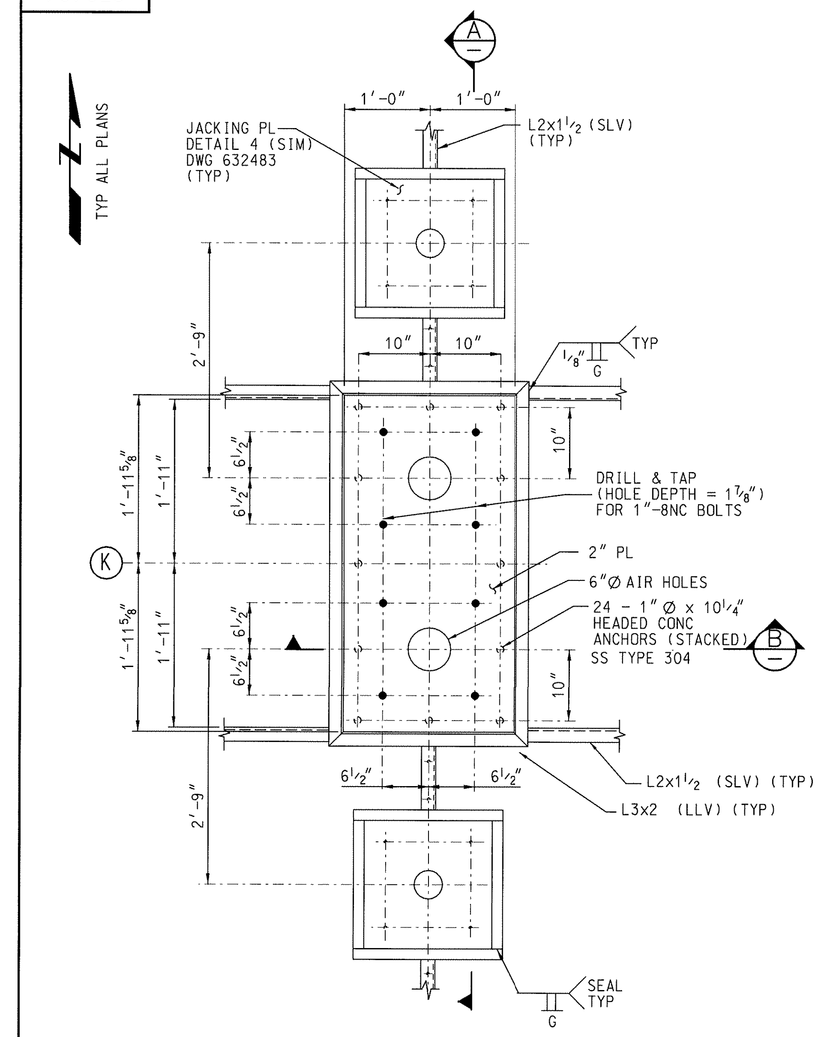

DETAIL 1
632481 & 632482

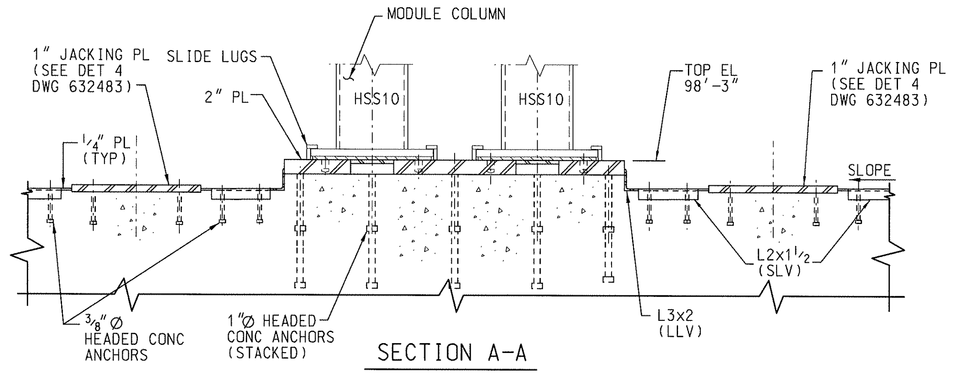

SECTION A-A

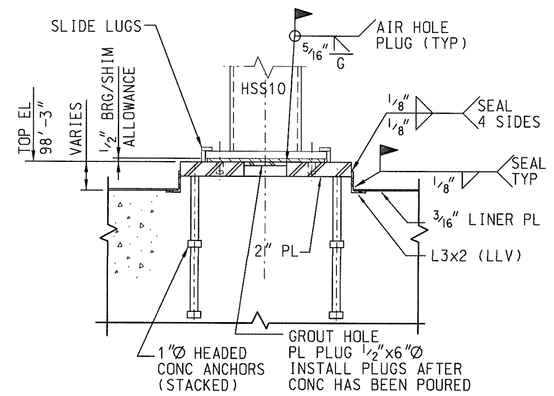

SECTION B-B

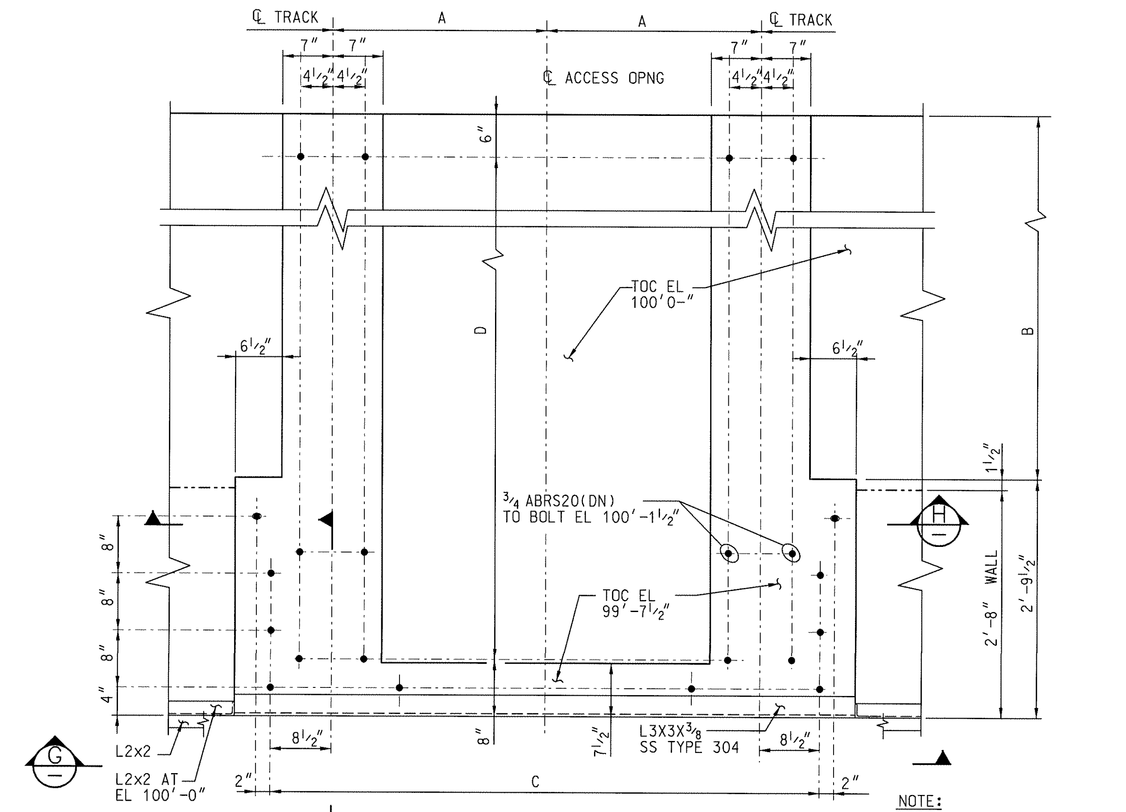

NOTE:
SEE PLAN FOR ORIENTATION

DETAIL 4
DETAIL 5
DETAIL 6
DETAIL 7
632481, 632482 & 632491

BLOCKOUT & ANCHOR BOLT SCHEDULE						
DET #	QTY	A	B	C (BOLT SPCG)	D (BOLT SPCG)	E (QTY)
4	1	1'-3"	7'-4½"	3 SPCS @ 15 11/16"	6 SPCS @ 18"	38
5	2	2'-11"	7'-4½"	6 SPCS @ 14½"	6 SPCS @ 18"	41
6	2	2'-5½"	4'-4½"	4 SPCS @ 19"	4 SPCS @ 18"	31
7	1	2'-5½"	10'-4½"	4 SPCS @ 19"	8 SPCS @ 18"	49

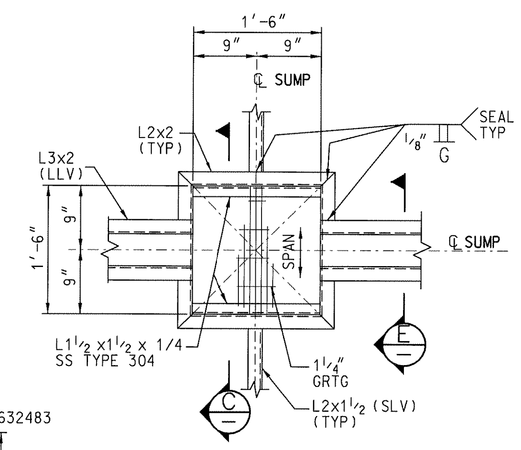

DETAIL 3
632482

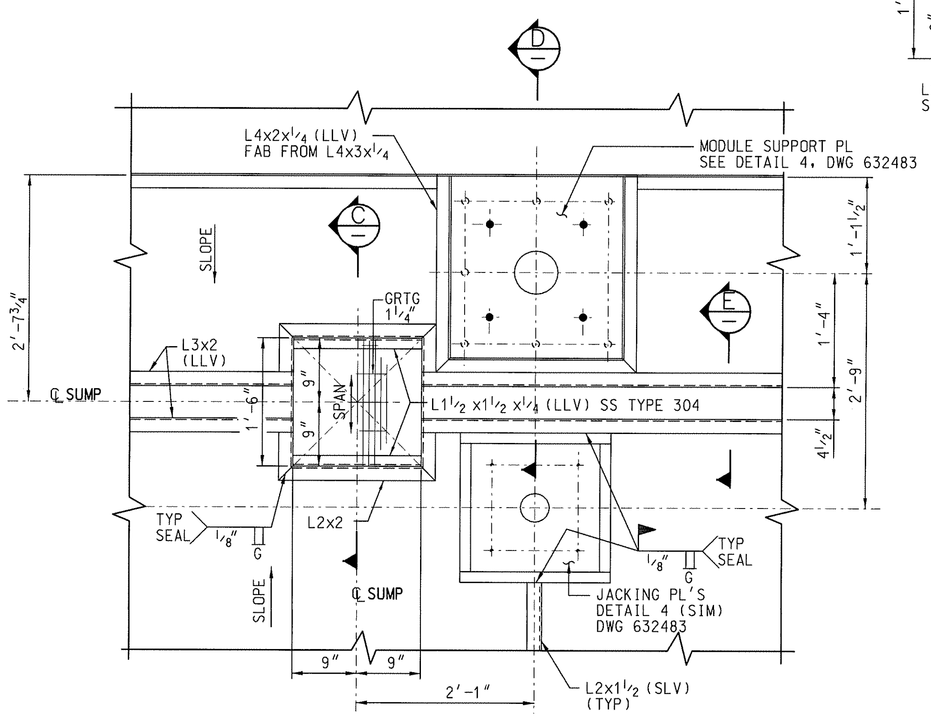

DETAIL 2
632481

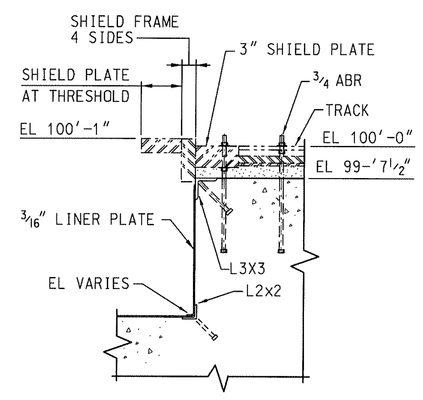

SECTION F-F

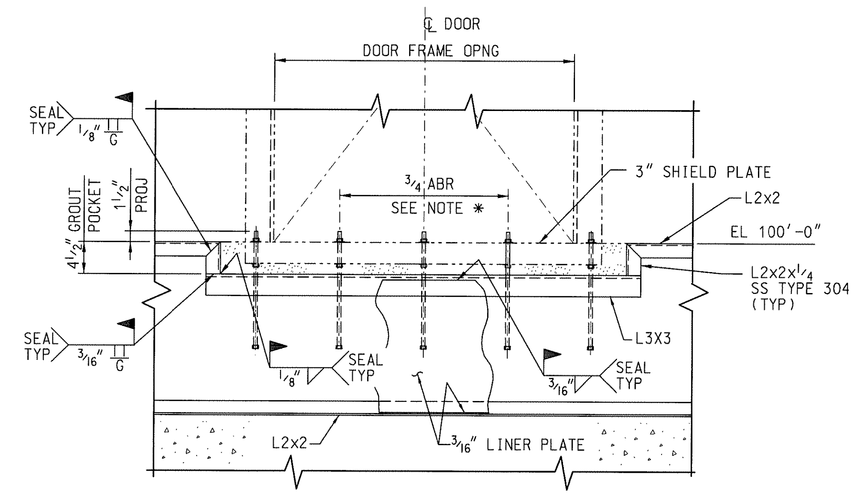

SECTION G-G

* AFTER RAILS & SHIELD PL HAVE BEEN GROUTED INTO FINAL POSITION, CUT & GRIND BOLTS OFF FLUSH WITH TOP OF PLATE AND SECURE WITH COMPLETE PENETRATION WELDS.

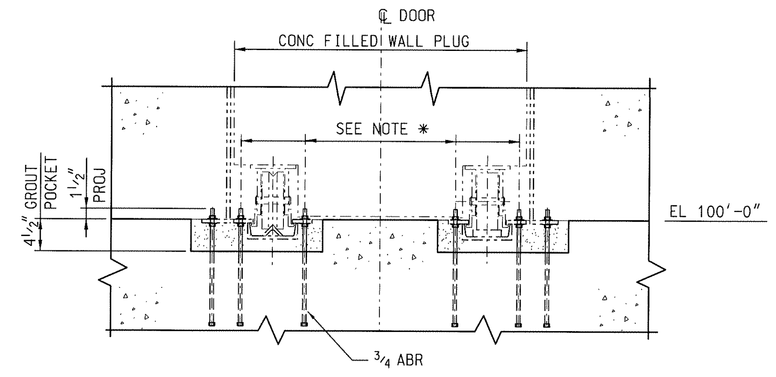

SECTION H-H

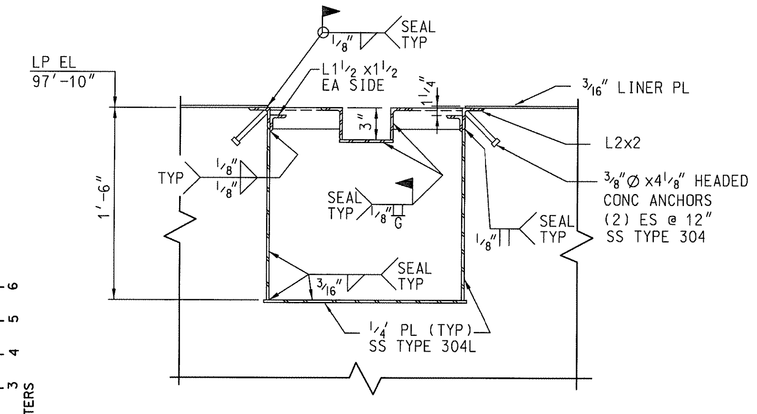

SECTION C-C

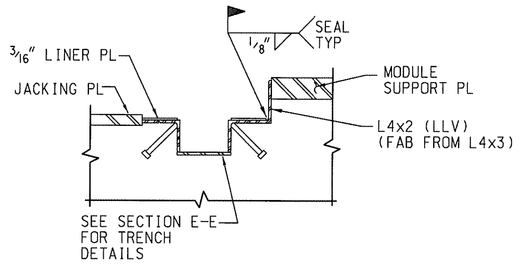

SECTION D-D
SCALE: 1½"=1'-0"

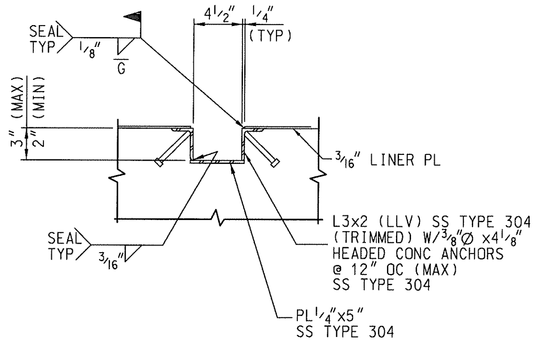

SECTION E-E
SCALE: 1½"=1'-0"

REVISION APPROVAL RECORD					REV 0
DISCIPLINE	BY	DATE	DISCIPLINE	BY	DATE
ARCH.	–	–	MECHANICAL		9/29/06
CIVIL	–	–	NUCLEAR		–
ELECTRICAL		9/29/06	PIPING		9/29/06
ENVIRON.	–	–	PROCESS		–
GEN. ARRANG.	–	–	QA / QC		9-29-06
HVAC		9/29/06	STRUCTURAL		9/29/06
I & C	–	–	REMOTE HDL.	–	–
			SYS. ENG.	–	–

DRAWING STATUS				
ISSUED	REV	DATE	LDE	PEM
PRELIMINARY	C	09/08/06	TR	NA
APPROVED FOR CONSTRUCTION	0	9/29/06 ~~09/26/06~~		

NOT APPROVED FOR CONSTRUCTION UNLESS SIGNED & DATED. DESTROY ALL PRINTS BEARING EARLIER DATE &/OR REV.NO.

PROFESSIONAL ENGINEER REGISTERED 12007 STATE OF IDAHO TOM N. RICH

SIZE	FOR DRAWING INDEX SEE DRAWING NO.
E	200-1696-01-923-632450

REV	DATE	DESCRIPTION	By/Chk
0	9-29-06 ~~09/26/06~~	ISSUE FOR LLP-2	BB/[illegible]
			/
			/
			/

NOTES

1. SAFETY SIGNIFICANT - PACKAGING CELL, SHEILDING WALLS, FLOOR AND ROOF.
2. FOR CONCRETE GENERAL NOTES AND STANDARD DETAILS SEE DWGS 632451 AND 632452.
3. FOR STEEL GENERAL NOTES AND STANDARD DETAILS SEE DWG 632600.

REFERENCE DRAWINGS

DRAWING NO.	DRAWING TITLE

IDAHO CLEANUP PROJECT
INTEGRATED WASTE TREATMENT UNIT

CONCRETE PROCESS CELL
FOUNDATION LINER PLATE
EMBED DETAILS SHT 2 OF 2

Washington Group International
7800 E. Union Ave. - Denver, CO 80237 - (303) 843-2000

SCALE: 1'=1'-0" (UON)	PLAN NOTE	PROJECT NO. 28339	
DRAWN: RBL	DATE 9/28/06	WBS: P.1.04.03.02	
DESIGNED: FK	DATE 9/28/06	SYSTEM:	QUALITY LEVEL: 2
CHECKED: HKG	DATE 9/28/06	DRAWING NUMBER 632484	REV 0
VERIFIED: TST	DATE 9/28/06		
APPROVED:	DATE		
CAD FILE NAME: 632481.dgn		INDEX CODE NUMBER: AREA 200, TYPE 1696, CL 02, DRTG 923	SHEETS-34

©WGI©DESIGN_FILE_PATH_AND_NAME_EXTENSION©
29-SEP-2006 10:12