632483

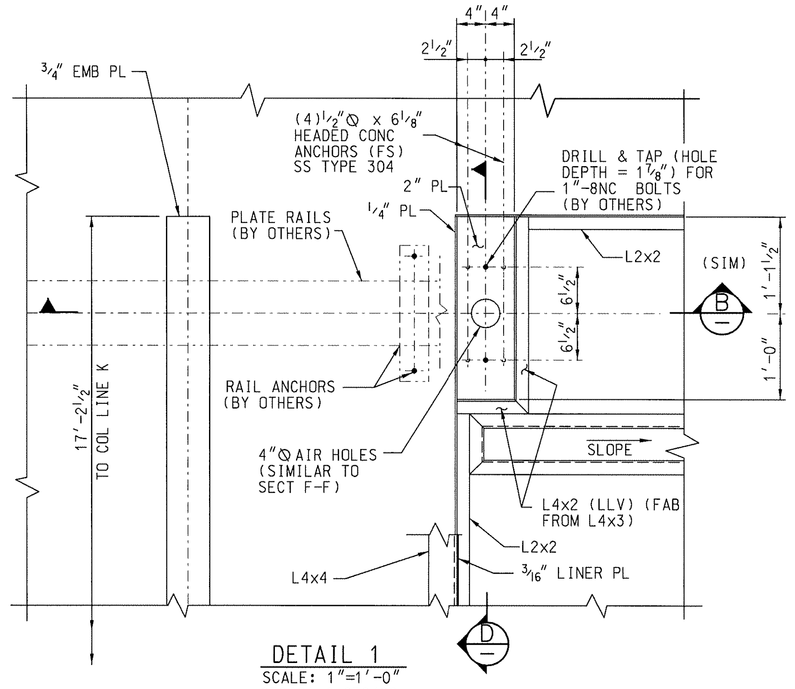


DETAIL 1
SCALE: 1"=1'-0"
632481 & 632482

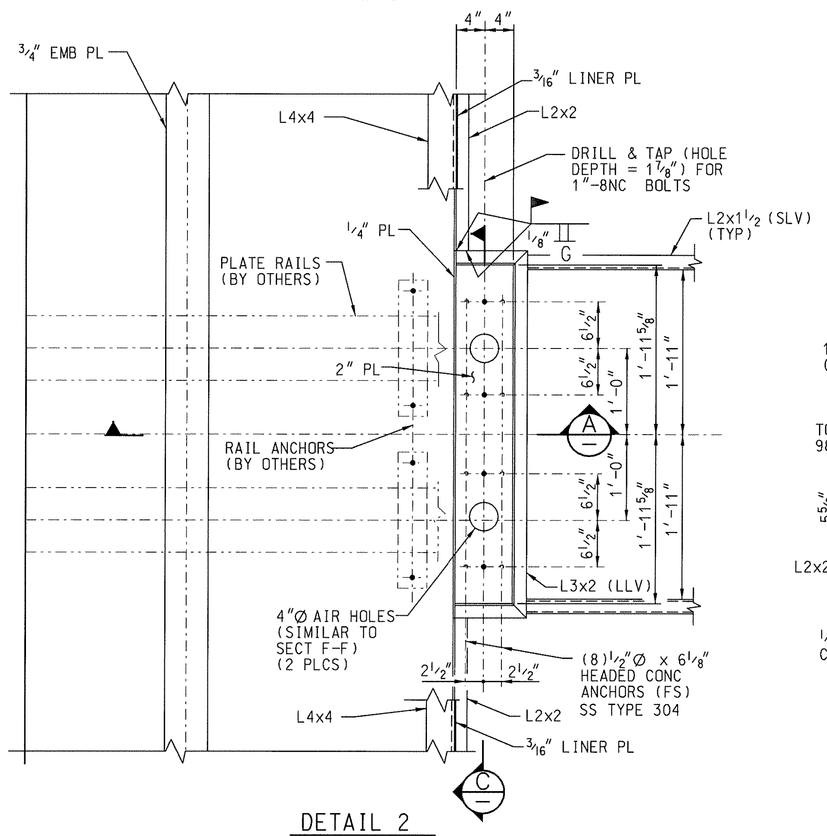


DETAIL 2
SCALE: 1"=1'-0"
632481 & 632482

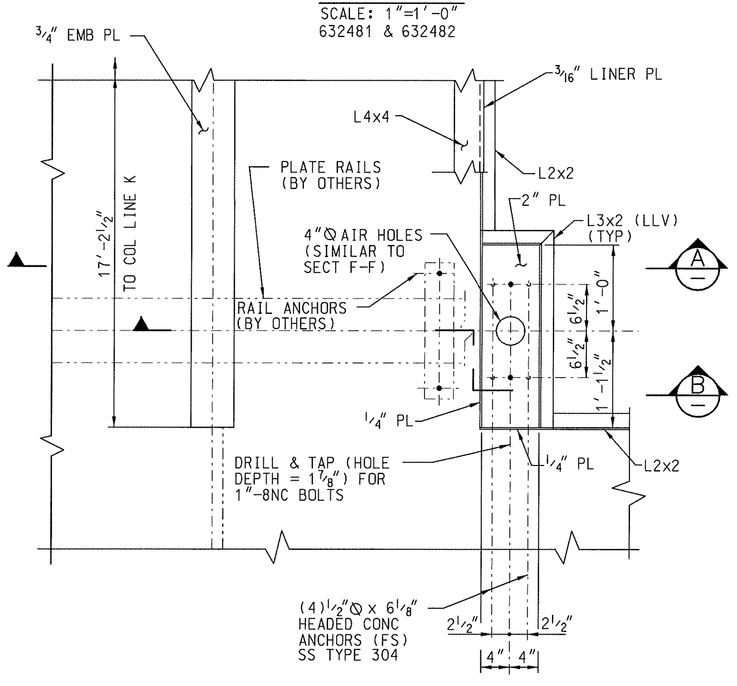


DETAIL 3
SCALE: 1"=1'-0"
632481

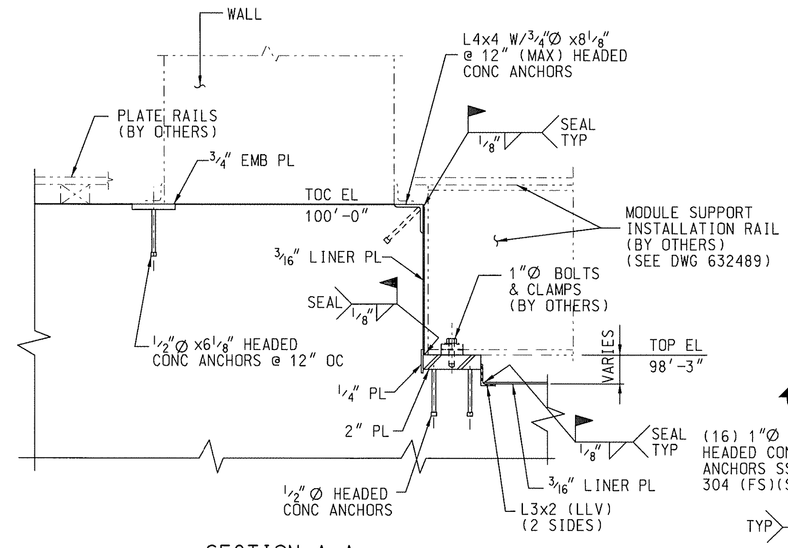


SECTION A-A
SCALE: 1"=1'-0"

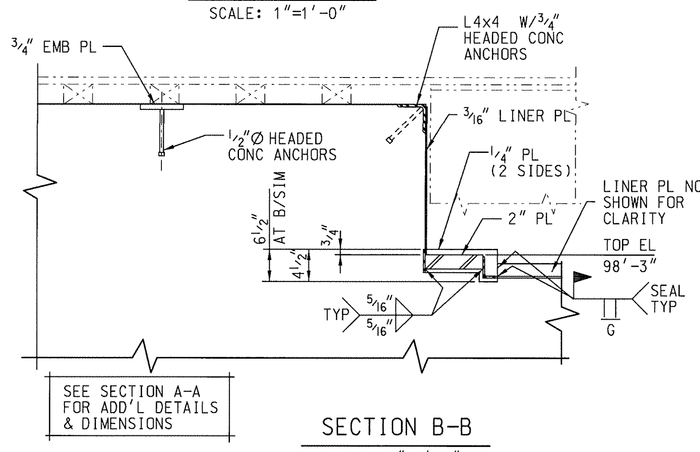


SECTION B-B
SCALE: 1"=1'-0"

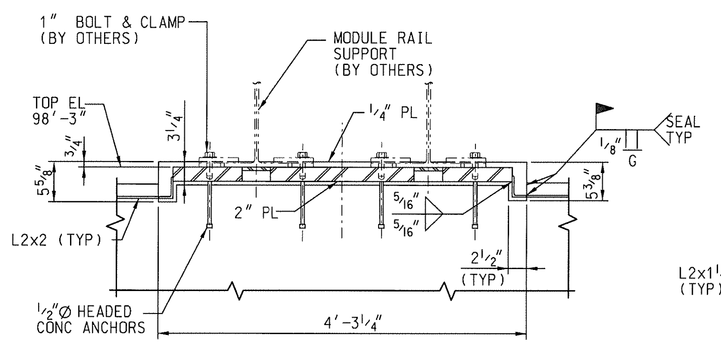


SECTION C-C
SCALE: 1"=1'-0"

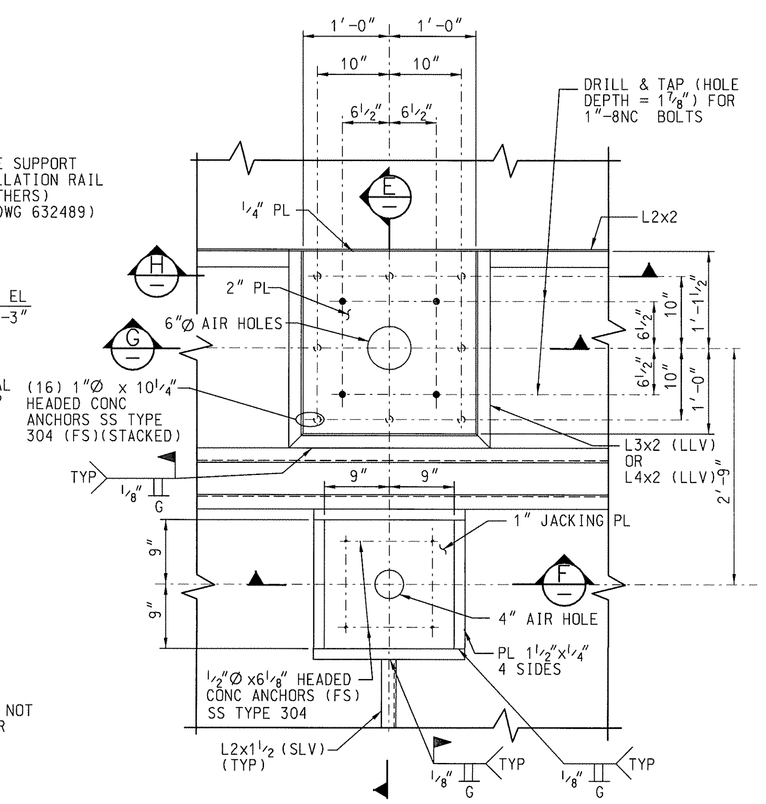


DETAIL 4
SCALE: 1"=1'-0"
632481
632482
632484

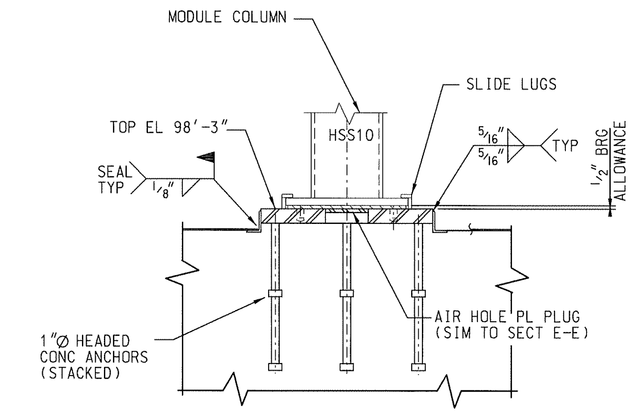


SECTION G-G
SCALE: 1"=1'-0"

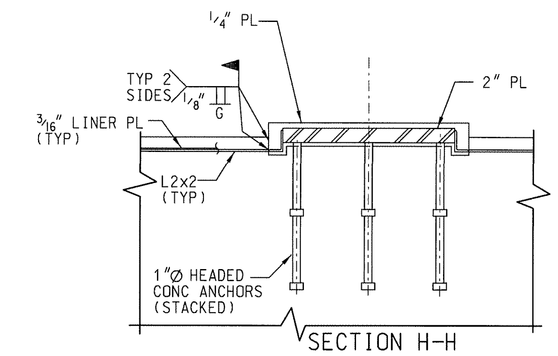


SECTION H-H
SCALE: 1"=1'-0"

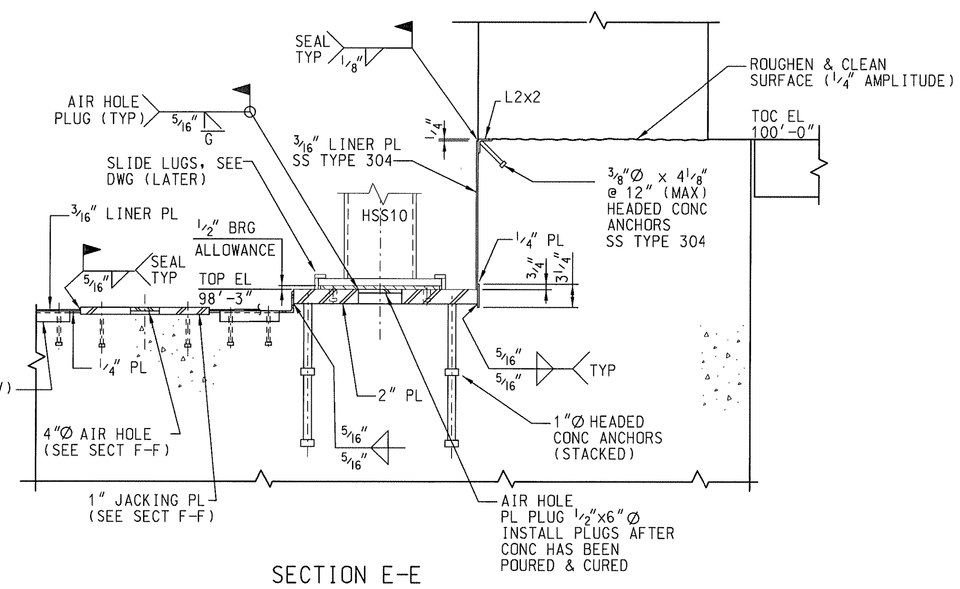


SECTION E-E
SCALE: 1"=1'-0"

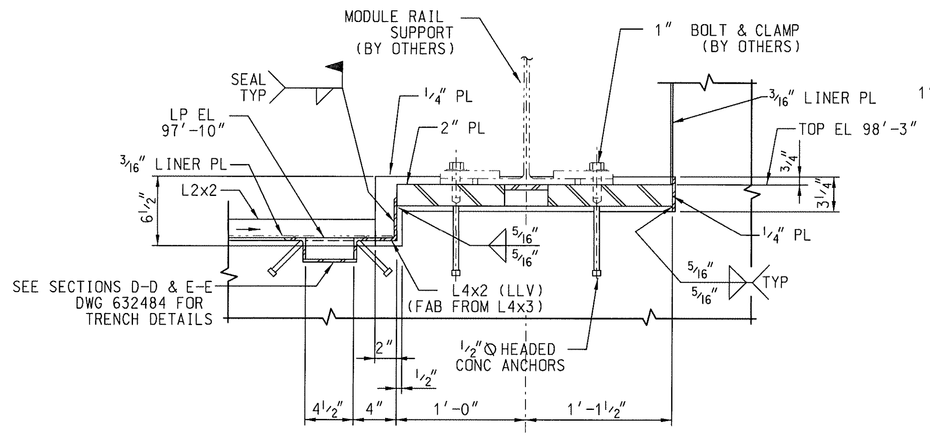


SECTION D-D
SCALE: 1½"=1'-0"

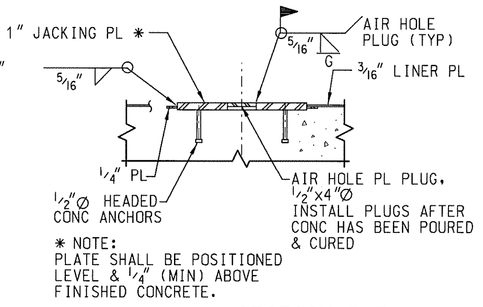


* NOTE:
PLATE SHALL BE POSITIONED LEVEL & ¼" (MIN) ABOVE FINISHED CONCRETE.

SECTION F-F
SCALE: 1"=1'-0"

| REV | DATE | DESCRIPTION | BY/CHK |
|---|---|---|---|
| 0 | 9/21/06 09/26/06 | ISSUED FOR LLP-2 | JB/MJB |
| | | | / |
| | | | / |
| | | | / |

**NOTES**

1. SAFETY SIGNIFICANT – PACKAGING CELL, SHEILDING WALLS, FLOOR AND ROOF.
2. FOR CONCRETE GENERAL NOTES AND STANDARD DETAILS SEE DWGS 632451 AND 632452.
3. FOR STEEL GENERAL NOTES AND STANDARD DETAILS SEE DWG 632600.

**REFERENCE DRAWINGS**

| DRAWING NO. | DRAWING TITLE |
|---|---|
| | |

**IDAHO CLEANUP PROJECT**
**INTEGRATED WASTE TREATMENT UNIT**

CONCRETE PROCESS CELL
FOUNDATION LINER PLATE
EMB DETAILS SHT 1 OF 2

**Washington Group International**
7800 E. Union Ave. – Denver, CO 80237 – (303) 843-2000

| REVISION APPROVAL RECORD | | | | REV 0 | |
|---|---|---|---|---|---|
| DISCIPLINE | BY | DATE | DISCIPLINE | BY | DATE |
| ARCH. | – | – | MECHANICAL | JB | 9/29/06 |
| CIVIL | – | – | NUCLEAR | – | – |
| ELECTRICAL | DJK | 9/29/06 | PIPING | EM | 9/29/06 |
| ENVIRON. | – | – | PROCESS | – | – |
| GEN. ARRANG. | – | – | QA / QC | MJB | 9-29-06 |
| HVAC | MJB | 9/29/06 | STRUCTURAL | TR | 9/29/06 |
| I & C | – | – | REMOTE HDL. | – | – |
| | | | SYS. ENG. | – | – |

| DRAWING STATUS | | | | | |
|---|---|---|---|---|---|
| ISSUED | REV | DATE | LDE | PEM | |
| PRELIMINARY | C | 09/08/06 | TR | NA | |
| APPROVED FOR CONSTRUCTION | 0 | 9/29/06 09/26/06 | TR | | |

NOT APPROVED FOR CONSTRUCTION UNLESS SIGNED & DATED. DESTROY ALL PRINTS BEARING EARLIER DATE &/OR REV.NO.

PROFESSIONAL ENGINEER REGISTERED 12007 STATE OF IDAHO TOM N. RICH 9/26/06

| SIZE | FOR DRAWING INDEX SEE DRAWING NO. |
|---|---|
| E | 200-1696-01-923-632450 |

| | | | |
|---|---|---|---|
| SCALE: AS NOTED | PLAN DATE | PROJECT NO. 28339 | |
| DRAWN: REL | DATE: 9/21/06 | MSS: P.1.04.03.02 | |
| DESIGNED: FL | DATE: 9/21/06 | SYSTEM: | QUALITY LEVEL: 2 |
| CHECKED: MDE | DATE: 9/29/06 | DRAWING NUMBER 632483 | REV 0 |
| VERIFIED: TST | DATE: 9/29/06 | | |
| APPROVED: | DATE | INDEX CODE NUMBER: AREA 200, TYPE 1696, SEQ 02, ORIG 923 | SHEET S-33 |
| CAD FILE NAME: 632483.dgn | | | |

@WORKDESIGN_FILE_PATH_AND_NAME_EXTENSION@
29-SEP-2006 10:12