REV	DATE	DESCRIPTION	BY/CHK
0	9/29/06	ISSUE FOR LLP-2	REL/HRE

NOTES

1. FOR GENERAL CONCRETE NOTES, SEE DWG 632451.

ANCHOR BOLT SCHEDULE-TYPE "ABR"

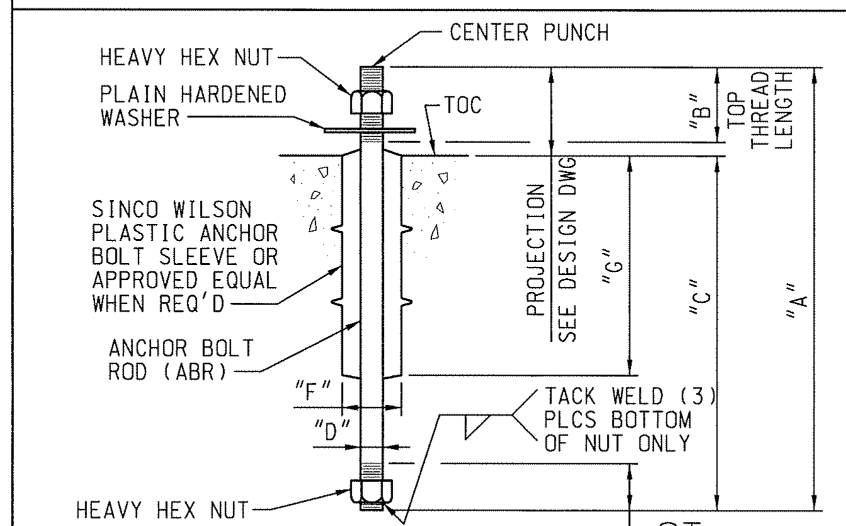

PART	MATERIAL
THREADED ROD	ASTM F1554, GRADE 36
PLAIN WASHER	ASTM F436
HEAVY HEX NUT	ASTM A563, GRADE A

MARK		LENGTH "A"	SLEEVE	EMBEDMENT
DIAMETER "D"	TYPE		FxG	"C" (MINIMUM)
1/2	ABR	SEE DRAWING CALLOUT	2 x 7	12
5/8	ABR		2 x 7	12
3/4	ABR		2 x 7	14
7/8	ABR		2 x 7	16
1	ABR		3 x 10	18
1 1/8	ABR		3 x 10	20
1 1/4	ABR		3 x 10	22
1 1/2	ABR		4 x 15	26
1 3/4	ABR		4 x 15	30
2	ABR		4 x 18	34

ALL DIMENSIONS ARE IN INCHES

ANCHOR BOLT SCHEDULE-TYPE "ABRH"

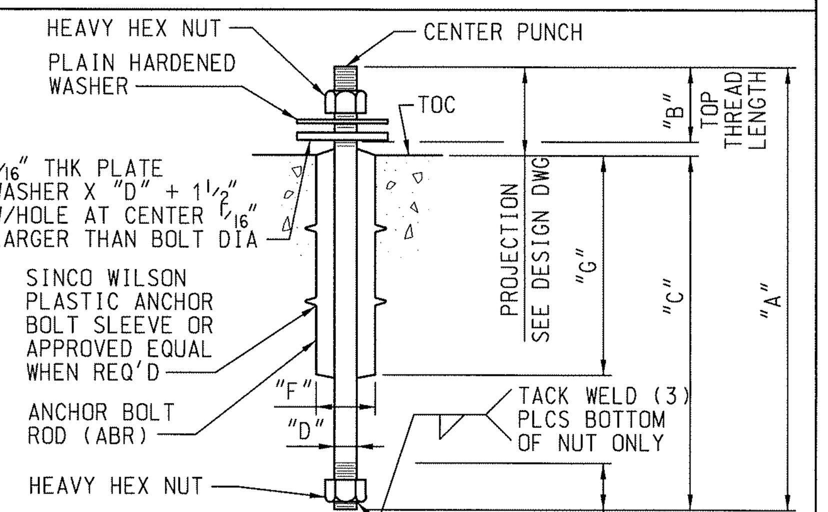

PART	MATERIAL
THREADED ROD	ASTM F1554, GRADE 105
PLATE WASHER	ASTM A572 GRADE 50
PLAIN WASHER	ASTM F436
HEAVY HEX NUT	ASTM A563, GRADE DH

MARK		LENGTH "A"	SLEEVE	EMBEDMENT
DIAMETER "D"	TYPE		FxG	"C" (MINIMUM)
1 1/2	ABRH	SEE DRAWING CALLOUT	4 x 15	32
1 3/4	ABRH		4 x 15	38
2	ABRH		4 x 18	44
2 1/4	ABRH		4 x 18	48
2 1/2	ABRH		6 x 24	54
2 3/4	ABRH		6 x 24	58
3	ABRH		6 x 24	64

ALL DIMENSIONS ARE IN INCHES

QUANTITY — (2) 3/4 ABR S 18-4 (DN)

- BOLT DIAMETER "D"
- BOLT TYPE
- INDICATES BOLT REQUIRES A PLASTIC SLEEVE
- OVERALL LENGTH "A"
- TOP THREAD LENGTH "B"
- (DN) INDICATES DOUBLE NUT REQUIRED AT TOP OF BOLT

TYPICAL ANCHOR BOLT CALLOUT

ANCHOR BOLT NOTES:

1. TOP OF BOLT SHALL BE FLAT & CENTER PUNCHED BY THE FABRICATOR.
2. BOLTS SHALL BE TAGGED WITH MARK AND DRAWING NUMBER.
3. THREADS SHALL BE UNC.

WELD PLATES - "WP"

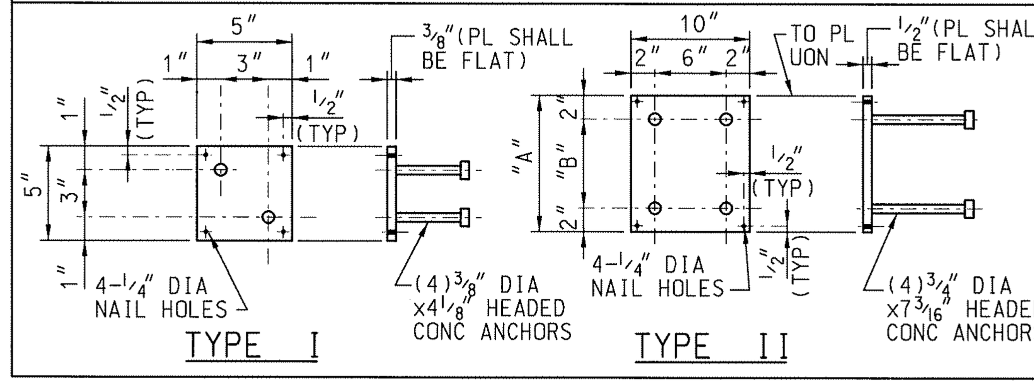

TYPE	MARK	DIM'S "A"	DIM'S "B"	WT EA (LB)
I	WP-4	SEE DETAIL		2.0
II	WP-6	11	7	19.6
II	WP-8	13	9	22.4
II	WP-10	15	11	25.3
II	WP-12	17	13	28.1

ALL DIMENSIONS IN INCHES. TAG EACH GROUP WITH MARK AND DRAWING NUMBER.

TRENCH ANGLE FRAME ASSEMBLY - "TAF"

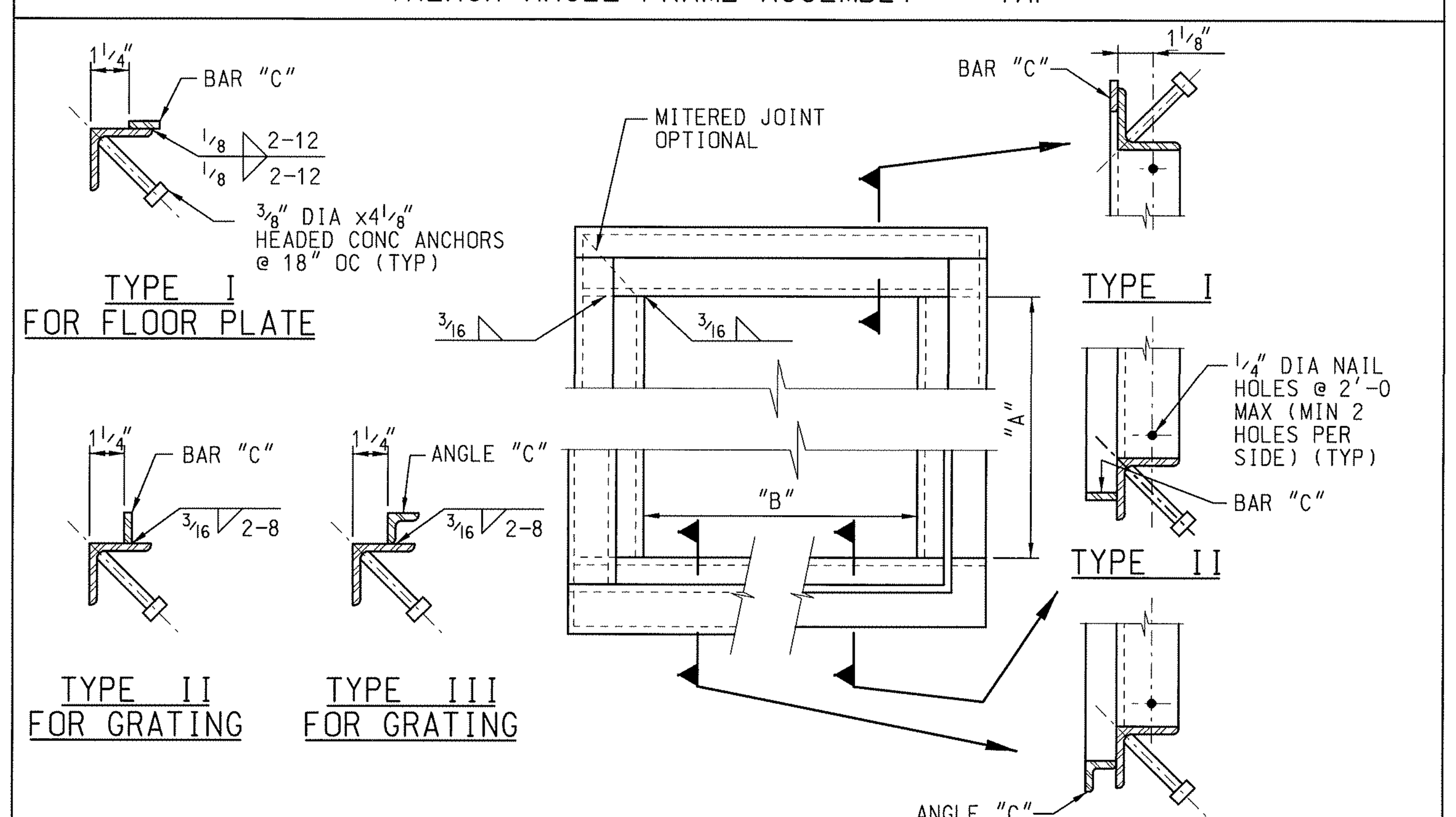

ALL DIMENSIONS IN INCHES. TAG EACH GROUP WITH MARK AND DRAWING NUMBER.

MARK	A	B	TYPE	ANGLE SIZE	"C" BAR OR ANGLE SIZE	WT (LBS/FT.)
TAF-1	SEE DRAWING CALLOUT	SEE DRAWING CALLOUT	I	L2x2x1/4	1x3/16	3.9
TAF-2			I	L2x2x1/4	1x1/4	4.1
TAF-3			I	L2x2x1/4	1x5/16	4.3
TAF-4			II	L2x2x1/4	1x1/4	4.1
TAF-5			II	L2x2x1/4	1 1/4 x1/4	4.3
TAF-6			II	L2x2x1/4	1 1/2 x1/4	4.5
TAF-7			III	L2x2x1/4	L1x1x1/8	4.1
TAF-8			III	L2x2x1/4	L1 1/4 x1 1/4 x1/4	5.2
TAF-9			III	L2x2x1/4	L1 1/2 x1 1/2 x1/4	5.6

TRENCH ANGLES - "TA"

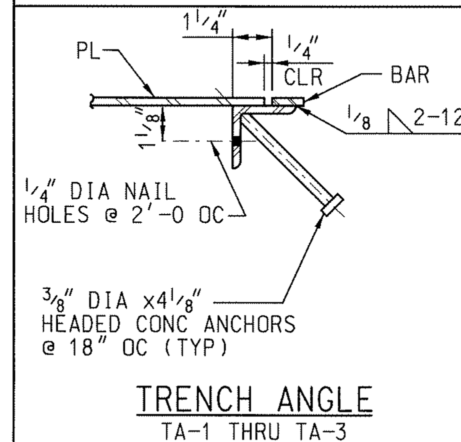

MARK	DESCRIPTION	WT (LBS/FT)
TA-1	L2x2x1/4 W/ BAR 1x3/16	3.9
TA-2	L2x2x1/4 W/ BAR 1x1/4	4.1
TA-3	L2x2x1/4 W/ BAR 1x5/16	4.3
TA-4	L2x2x1/4 W/ BAR 1x1/4	4.1
TA-5	L2x2x1/4 W/ BAR 1 1/4 x1/4	4.3
TA-6	L2x2x1/4 W/ BAR 1 1/2 x1/4	4.5
TA-7	L2x2x1/4 W/ BAR 1 3/4 x1/4	4.7
TA-8	L2x2x1/4 W/ BAR 2x1/4	4.9
TA-9	L2x2x1/4 W/ BAR 2 1/4 x1/4	5.1
TA-10	L2x2x1/4 W/ L1 1/4 x1 1/4 x1/4	5.2
TA-11	L2x2x1/4 W/ L1 1/2 x1 1/2 x1/4	5.6
TA-12	L2x2x1/4 W/ L1 3/4 x1 3/4 x1/4	6.1
TA-13	L2x2x1/4 W/ L2x2x1/4	6.5
TA-14	L2x2x1/4 W/ L2 1/2 x2 1/2 x1/4	7.4

ALL DIMENSIONS IN INCHES TAG EACH GROUP WITH MARK AND DRAWING NUMBER.

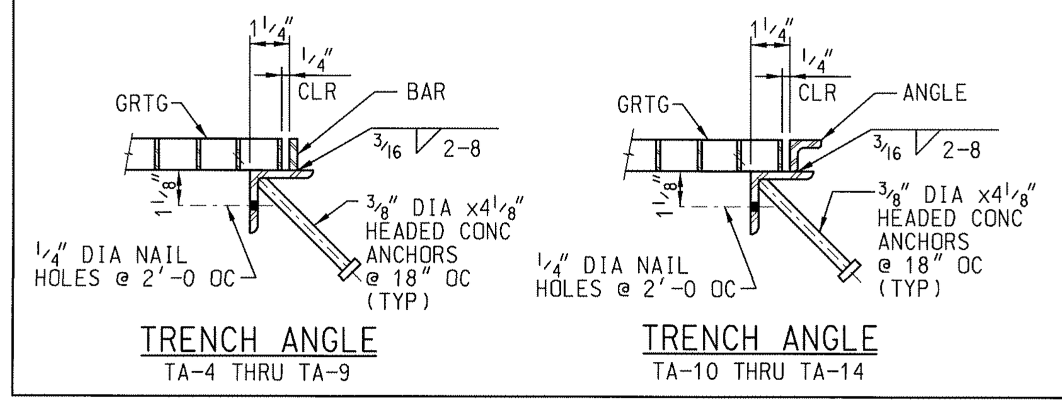

CURB ANGLES - "CA"

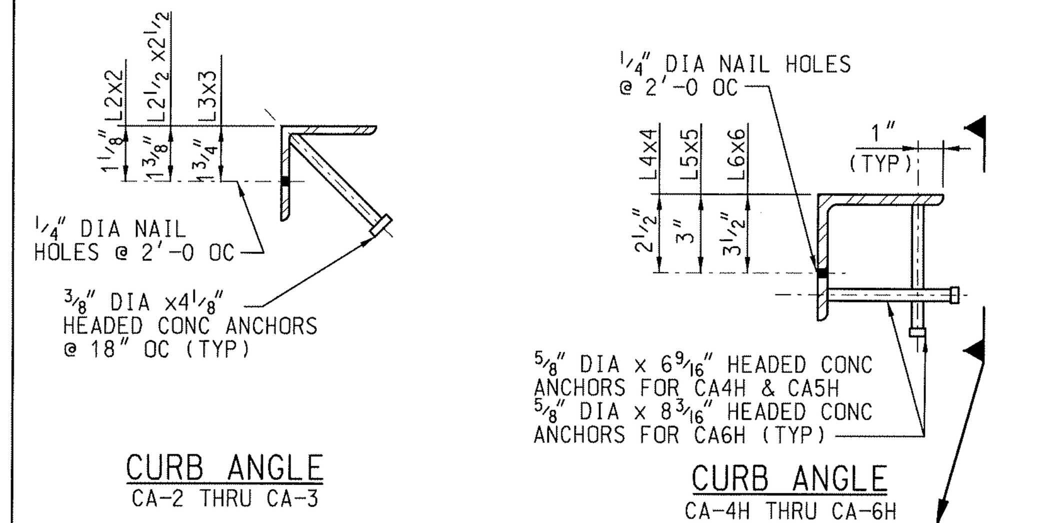

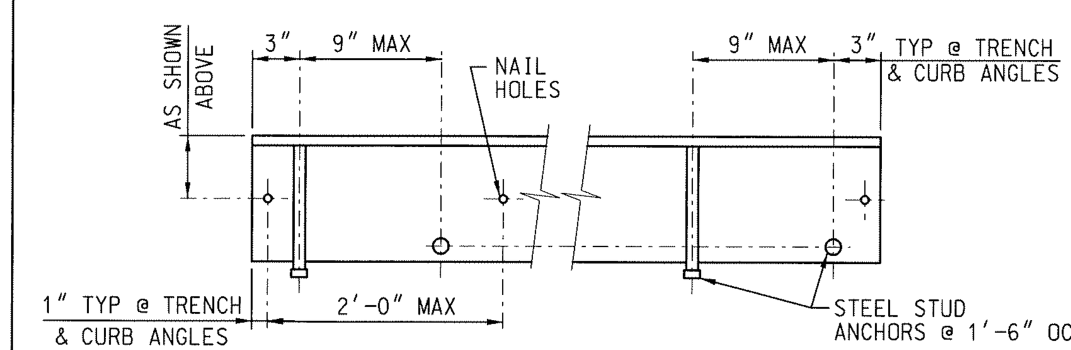

MARK	DESCRIPTION	WT (LBS/FT)
CA-2	L2x2x1/4	3.2
CA-2 1/2	L2 1/2 x2 1/2 x1/4	4.1
CA-3	L3x3x1/4	4.9
CA-4H	L4x4x5/8	16.6
CA-5H	L5x5x5/8	20.9
CA-6H	L6x6x5/8	25.2

ALL DIMENSIONS IN INCHES TAG EACH GROUP WITH MARK AND DRAWING NUMBER.

LEVELING CHANNEL - "LC"

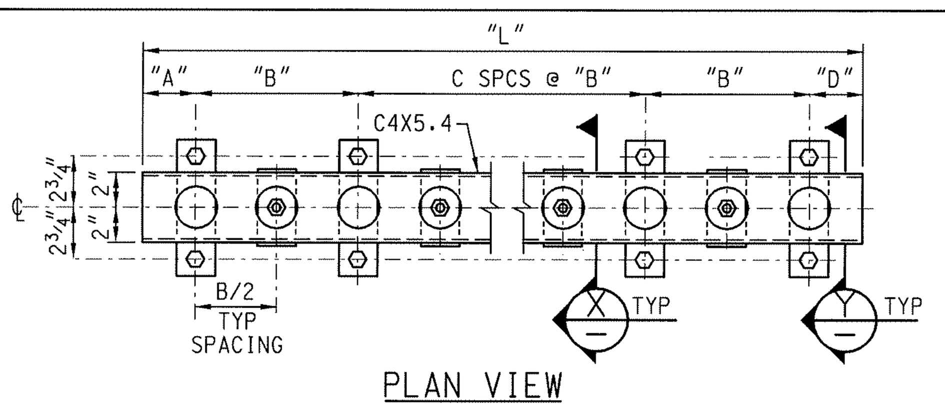

QUANTITY — (2) LC 01-4-6-4-3-43

- LEVELING CHANNEL
- ID NUMBER
- LENGTH "A"
- LENGTH "B"
- SPACES "C"
- LENGTH "D"
- OVERALL LENGTH "L"

TYPICAL LEVELING CHANNEL CALLOUT

NOTES:
ALL DIMENSIONS IN INCHES. TAG EACH GROUP WITH MARK AND DRAWING NUMBER. SEE DRAWINGS FOR CALLOUTS.

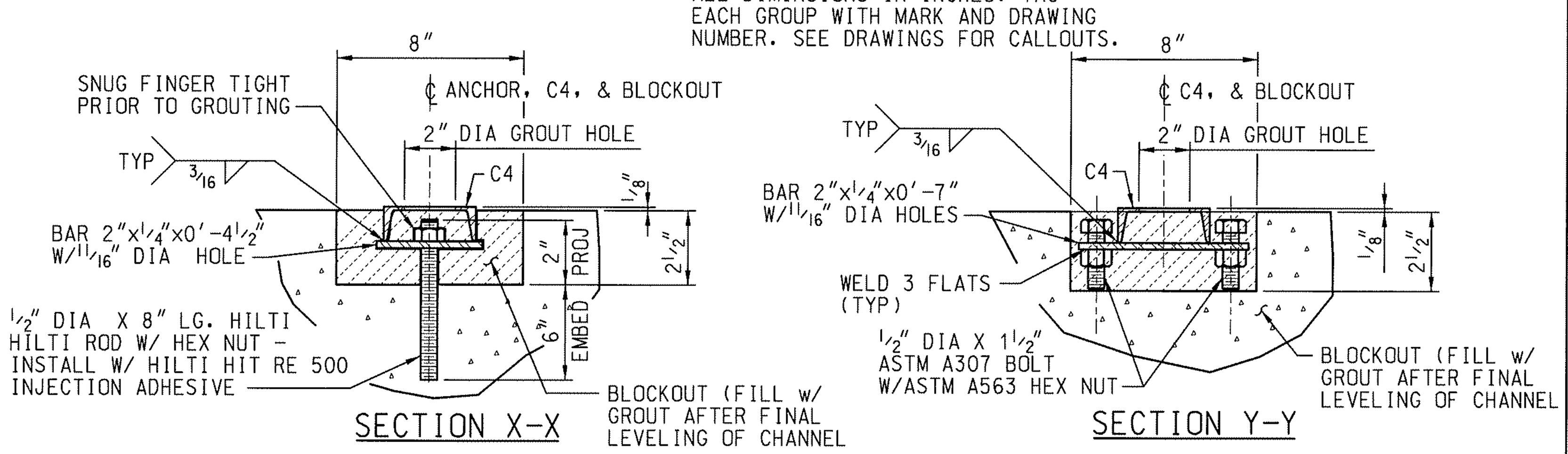

PIPE SLEEVES - "PS"

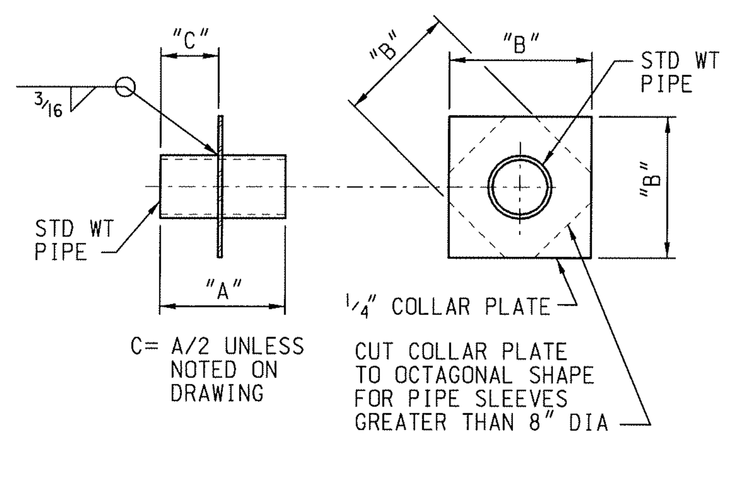

MARK	PIPE DIA	LENGTH A	COLLAR B	COLLAR WT (LBS)	PIPE WT (LBS/FT)
PS-1 1/2	1 1/2	SEE DRAWING CALLOUT	6	2.6	2.7
PS-2	2		7	3.5	3.7
PS-3	3		8	4.5	7.6
PS-4	4		9	5.7	10.8
PS-6	6		12	10.2	19.0
PS-8	8		14	13.9	28.6
PS-10	10		16	22.7	40.5
PS-12	12		18	23.0	49.6
PS-14	14		20	28.4	54.6

ALL DIMENSIONS IN INCHES. TAG EACH GROUP WITH MARK AND DRAWING NUMBER.

REFERENCE DRAWINGS

DRAWING NO.	DRAWING TITLE

REVISION APPROVAL RECORD				REV 0	
DISCIPLINE	BY	DATE	DISCIPLINE	BY	DATE
ARCH.	-	-	MECHANICAL	[signature]	9/29/06
CIVIL	-	-	NUCLEAR	-	-
ELECTRICAL	[signature]	9/29/06	PIPING	[signature]	9/29/06
ENVIRON.	-	-	PROCESS	-	-
GEN. ARRANG.	-	-	QA / QC	[signature]	9-29-06
HVAC	[signature]	9/29/06	STRUCTURAL	[signature]	9/29/06
I & C	-	-	REMOTE HDL.	-	-
			SYS. ENG.	-	-

DRAWING STATUS					
ISSUED	REV	DATE	LDE	PEM	
PRELIMINARY	C	09/08/06	TR	NZ	
APPROVED FOR CONSTRUCTION	0	9/29/06 ~~09/26/06~~	[signature]	[signature]	

NOT APPROVED FOR CONSTRUCTION UNLESS SIGNED & DATED. DESTROY ALL PRINTS BEARING EARLIER DATE &/OR REV.NO.

SIZE E — FOR DRAWING INDEX SEE DRAWING NO. 200-1696-01-923-632450

PROFESSIONAL ENGINEER REGISTERED 12007 STATE OF IDAHO TOM N. RICH 9/29/06

IDAHO CLEANUP PROJECT
INTEGRATED WASTE TREATMENT UNIT

CONCRETE STANDARD EMBEDMENT DETAILS AND SCHEDULES

Washington Group International
7800 E. Union Ave. - Denver, CO 80237 - (303) 843-2000

SCALE: AS NOTED	PLOT DATE	PROJECT NO. 28339	
DRAWN: REL	DATE 9/28/06	WBS: P.1.04.03.01	
DESIGNED: FC	DATE 9/29/06	SYSTEM:	QUALITY LEVEL: 4
CHECKED: HRE	DATE 9/29/06	DRAWING NUMBER	REV
VERIFIED: NA	DATE	632452	0
APPROVED:	DATE	INDEX CODE NUMBER: AREA 200, TYPE 1696, CL 61, ORIG 923	SHEETS-2
CAD FILE NAME: 632452.dgn			

WGIDESIGN_FILE_PATH_AND_NAME_EXTENSION$
29-SEP-2006 10:12

632452