632451

CONCRETE GENERAL NOTES

1. CONCRETE:
   1.1 ALL CONCRETE SHALL BE DESIGNED AND PLACED IN ACCORDANCE WITH PROJECT SPECIFICATIONS AND IN CONFORMANCE WITH THE ACI BUILDING CODE (ACI-318-02).
   1.2 TYPE II CEMENT SHALL BE USED THROUGHOUT UNLESS OTHERWISE NOTED.
   1.3 COARSE AGGREGATE SHALL BE A MAXIMUM OF 1½" IN SIZE FOR LARGE BLOCKS AND MATS, AND A MAXIMUM OF ¾" IN SIZE FOR ALL OTHER STRUCTURES.
   1.4 COMPRESSIVE STRENGTH OF CONCRETE SHALL BE CLASS BSA. 4000 psi AT 28 DAYS UNLESS NOTED OTHERWISE ON THE DRAWINGS. (SEE PROJECT SPECIFICATION 03330 FOR CONCRETE CLASIFICATIONS)
   1.5 AIR ENTRAINING ADMIXTURES CONFORMING TO ASTM C260 SHALL BE USED IN ALL CONCRETE UNLESS NOTED.
   1.6 ALL DAMAGED CONCRETE SHALL BE REPLACED AS INSTRUCTED BY THE BUYER.

2. REINFORCING:
   2.1 UNLESS OTHERWISE NOTED ON THE DRAWINGS ALL REINFORCING BARS SHALL BE NEW, DEFORMED BILLET STEEL BARS CONFORMING TO ASTM A706, GRADE 60.
   2.2 WELDED WIRE FABRIC (WWF) SHALL MEET THE REQUIREMENTS OF ASTM A185.
   2.3 UNLESS OTHERWISE APPROVED BY THE BUYER, BAR SUPPORTS SHALL BE:
      2.3.1 PRECAST CONCRETE BLOCKS WHEN CONCRETE IS CAST ON GRADE
      2.3.2 CRSI CLASS 3-NO PROTECTION, BRIGHT BASIC WHERE CONCRETE WILL NOT BE EXPOSED TO VIEW UNLESS OTHERWISE NOTED ON THE DRAWINGS.
      2.3.3 CRSI CLASS 1-MAXIMUM PROTECTION, PLASTIC COATED WHERE CONCRETE WILL BE EXPOSED TO VIEW OR IN A CORROSIVE ENVIRONMENT, UNLESS OTHERWISE NOTED ON THE DRAWINGS.

3. JOINT FILLER AND SEALANT:
   3.1 JOINT FILLER SHALL BE OF THE PREFORMED BITUMINOUS TYPE, CONFORMING TO ASTM D1751, SIZE AS NOTED ON THE DRAWINGS.
   3.2 JOINT SEALANT SHALL CONFORM TO ASTM C920,TYPE S, ONE PART POLYURETHANE ELASTOMERIC JOINT SEALANT. SEALANT SHALL BE GRADE P SELF-LEVELING, POUR GRADE FOR HORIZONTAL JOINTS AND GRADE NS NON-SAG, GUN GRADE FOR VERTICAL OR OVERHEAD JOINTS.
   3.3 CONCRETE EDGES THAT ARE TO RECEIVE JOINT SEALANT SHALL BE PLACED AGAINST NON-OILED FORMS. THE NON-OILED PORTION SHALL EXTEND A MINIMUM OF 2½" FROM THE EDGE TO BE SEALED.
   3.4 JOINTS RECEIVING SEALANT SHALL FIRST BE COATED WITH PRIMER IF REQUIRED BY THE SEALANT MANUFACTURER. JOINT PREPARATION AND APPLICATION OF PRIMER AND SEALANT SHALL BE IN ACCORDANCE WITH MANUFCTURER'S INSTRUCTIONS.
   3.5 BACKING ROD SHALL BE ROUND, PREFORMED, RESILIENT MATERIAL CONFORMING TO ASTM D 5249, TYPE 1, FOR USE WITH COLD-AND HOT-APPLIED SEALANTS OR TYPE 3, FOR USE WITH COLD-APPLIED SEALANTS. THE DIAMETER SHALL NOT BE LESS THAN ONE AND ONE-HALF (1 1/2) TIMES THE WIDTH OF THE JOINT IN WHICH IT IS INSTALLED.

4. EXPANSION, CONSTRUCTION AND CONTROL JOINTS:
   4.1 EXPANSION, CONSTRUCTION AND CONTROL JOINTS SHALL BE PROVIDED IN ACCORDANCE WITH STANDARD DETAILS AND AS LOCATED OR DETAILED ON THE DRAWINGS. ANY OTHERS DEEMED NECESSARY SHALL BE APPROVED BY THE BUYER.
   4.2 FIELD LOCATED CONSTRUCTION JOINTS SHALL BE LOCATED PER THE PROJECT SPECIFICATION.

5. CONCRETE PROTECTION FOR REINFORCEMENT:
   5.1 MINIMUM CLEAR DISTANCE BETWEEN FACE OF CAST IN PLACE CONCRETE AND OUTSIDE OF BAR SHALL BE AS FOLLOWS, UNLESS NOTED:
      5.1.1 CONCRETE SURFACES EXPOSED TO WEATHER OR IN CONTACT WITH EARTH AFTER REMOVAL OF FORMS: 1½" FOR #5 BARS AND SMALLER, 2" FOR #6 BARS AND LARGER.
      5.1.2 CONCRETE DEPOSITED AGAINST EARTH OR VOID FORMS: 3".
      5.1.3 CONCRETE SURFACES NOT EXPOSED DIRECTLY TO WEATHER OR IN CONTACT WITH EARTH:
         5.1.3.1 SLABS, WALLS, JOISTS: #11 REBAR OR SMALLER,¾"; #14 AND LARGER, 1½".
         5.1.3.2 BEAMS, GIRDERS, COLUMNS: PRIMARY REINFORCEMENT, TIES, STIRRUPS OR SPIRALS, 1½".
      5.1.4 FOR CLEARANCES NOT LISTED, SEE ACI 318, SECTION 7.7.
   5.2 EXPOSED REINFORCING BARS, INSERTS, AND PLATES INTENDED FOR FUTURE BONDING SHALL BE PROTECTED AGAINST CORROSION.

6. SPLICES, GENERAL:
   6.1 LAPPED SPLICES OF REINFORCEMENT AND WELDED WIRE FABRIC SHALL BE LOCATED AS REQUIRED OR PERMITTED ON THE DESIGN DRAWINGS.
   6.2 SPLICES NOT DEFINED ON THE DRAWING SHALL BE LAPPED IN ACCORDANCE WITH ACI 318, CHAPTER 12 CLASS B, TOP BAR.
   6.3 WELDING OR TACK-WELDING OF REINFORCING IS PROHIBITED UNLESS NOTED ON THE DRAWINGS.

7. DETAILS:
   7.1 EXTERNAL CORNERS AND EDGES OF CONCRETE ABOVE FINISHED GRADE SHALL BE FORMED OR TROWELED TO A ¾" CHAMFER, UNLESS OTHERWISE NOTED ON THE DRAWINGS.
   7.2 ALL ANCHOR BOLT GROUPS SHALL BE SUPPORTED AND SET BY USING A TEMPLATE WITH THE EMBEDDED ENDS SECURELY TIED TO PREVENT DISPLACEMENT DURING PLACEMENT OF THE CONCRETE. FIELD TACK WELDING OF REINFORCING, PIPE SLEEVES, ETC., TO ANCHOR BOLTS IS PROHIBITED.
   7.3 BEFORE PLACING ANY CONCRETE, ALL DRAWINGS SHALL BE CHECKED TO DETERMINE THAT ANCHOR BOLTS, EMBEDDED STEEL, PIPING, CONDUIT, DRAINS, BOXES, ETC. ARE PROPERLY INSTALLED.
   7.4 REPOSITIONING OF REINFORCING TO AVOID INTERFERENCE WITH EMBEDDED ITEMS SHALL BE APPROVED BY THE BUYER PRIOR TO PLACING CONCRETE.
   7.5 FLOOR SLABS (INTERIOR AND EXTERIOR) AND PAVING SHALL BE FINISHED PER PROJECT SPECIFICATION AND DRAWINGS.
   7.6 LATERAL SUPPORTS SHALL BE PROVIDED FOR WALLS DURING BACKFILLING EXCEPT AS NOTED ON THE DRAWINGS. WALLS THAT DO NOT REQUIRE LATERAL SUPPORT MUST ATTAIN AT LEAST 75% OF THE SPECIFIED STRENGTH (f'c) AS DETERMINED FROM FIELD CURED STRENGTH TESTS PRIOR TO BACKFILL.
   7.7 TOP OF PLASTIC ANCHOR BOLT SLEEVES SHALL BE CUT OFF FLUSH WITH ROUGH CONCRETE PRIOR TO GROUT OR EQUIPMENT INSTALLATION. SPECIAL EFFORT SHALL BE TAKEN TO ENSURE THAT SLEEVES ARE COMPLETELY FILLED WITH GROUT UNLESS NOTED OTHERWISE ON DRAWINGS.
   7.8 CHIP OR BRUSH-HAMMER CONCRETE SURFACE AS NECESSARY TO REMOVE ALL LAITANCE, UNSOUND CONCRETE, OIL OR GREASE STAINS, PAINT OR OTHER CONTAMINANTS AND PROVIDE A ROUGHED CONCRETE SURFACE WITH AT LEAST ¼" PROFILE WHERE INDICATED.

8. CONCRETE COATINGS:
   8.1 FOR CONCRETE COATINGS, SEE DRAWINGS AND ARCHITECTURAL ROOM FINISH SCHEDULE.

9. GENERAL:
   9.1 FOR REQUIREMENTS FOR FORMING, PLACING, CURING, MATERIALS AND ADDITIONAL REQUIREMENTS SEE PROJECT SPECIFICATIONS.

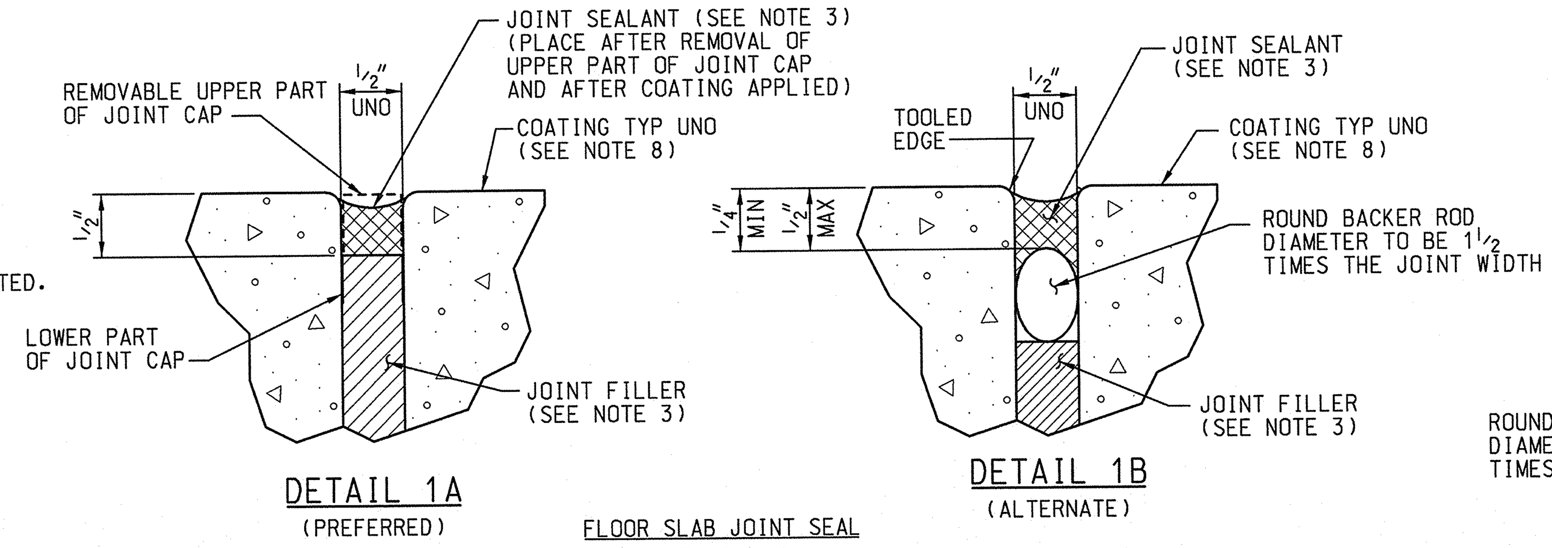

DETAIL 1A
(PREFERRED)

DETAIL 1B
(ALTERNATE)

FLOOR SLAB JOINT SEAL
DETAIL 1
1" = 1"

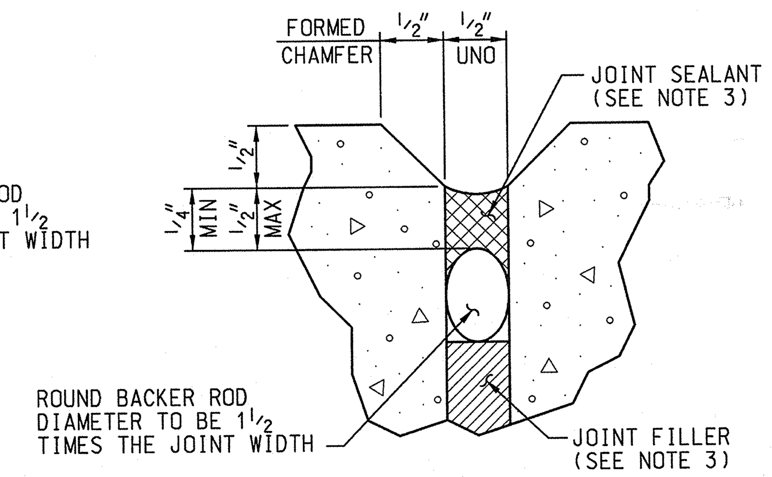

WALL JOINT SEAL
DETAIL 2
1" = 1"

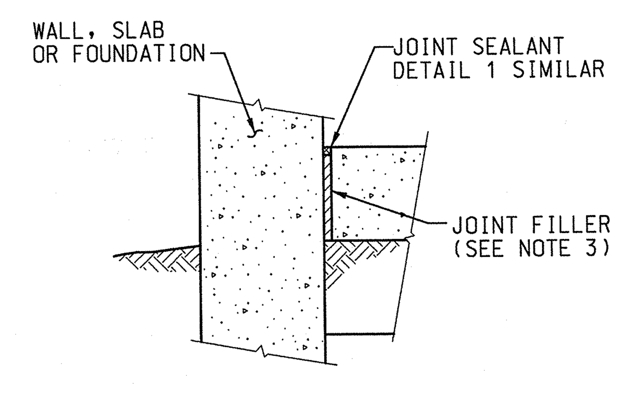

FLOOR SLAB EXPANSION/ISOLATION JOINT AT WALL, SLAB, OR FOUNDATION
DETAIL 3
1½" = 1'-0"

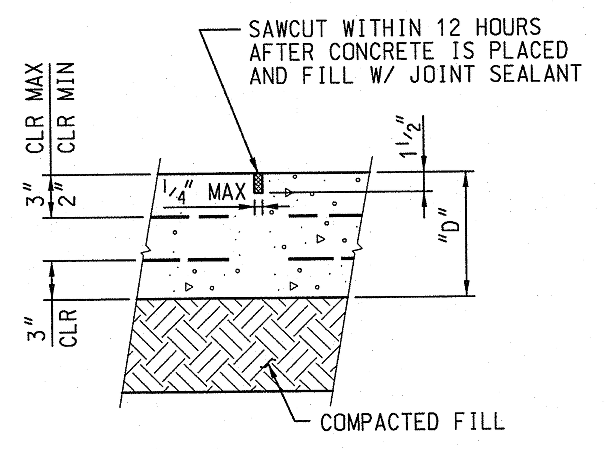

SLAB ON GRADE
SAWCUT CONTROL JOINT
"D" = 8" OR MORE
DISCONTINUE REINFORCING AT SAWCUT LOCATION

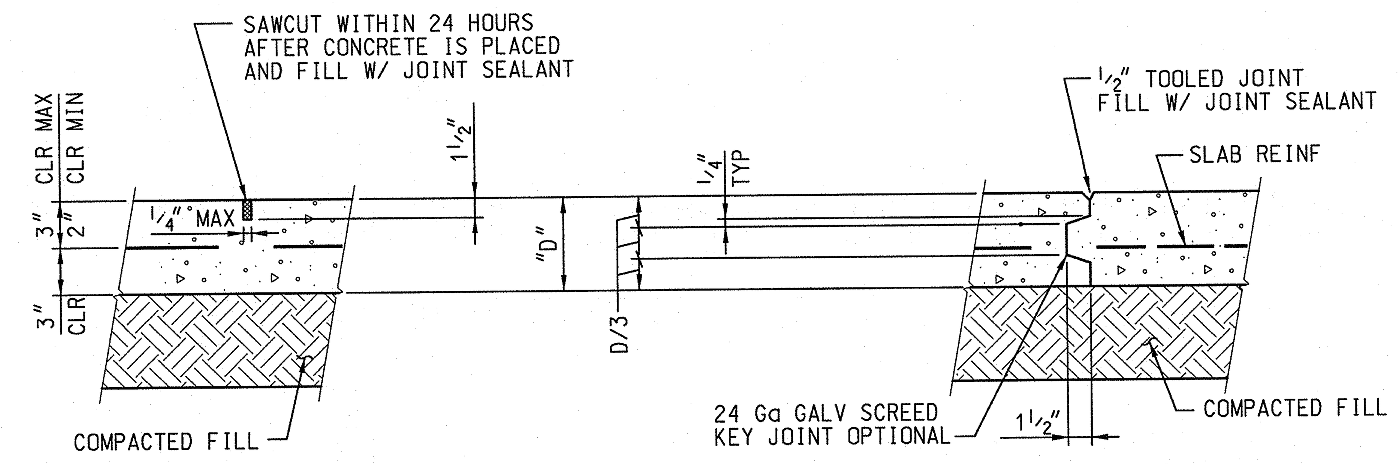

SLAB ON GRADE
SAWCUT CONTROL JOINT
"D" = 6" OR LESS
DISCONTINUE REINFORCING AT SAWCUT LOCATION

SLAB ON GRADE
KEYED CONSTRUCTION JOINT
DISCONTINUE REINFORCING AT JOINT

CONTROL (CN.J.) AND CONSTRUCTION (C.J.) JOINTS
DETAIL 4
1½" = 1'-0"

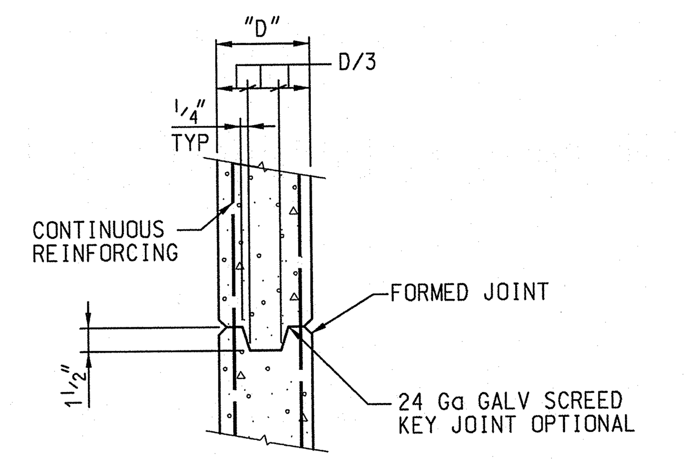

WALL CONSTRUCTION JOINT

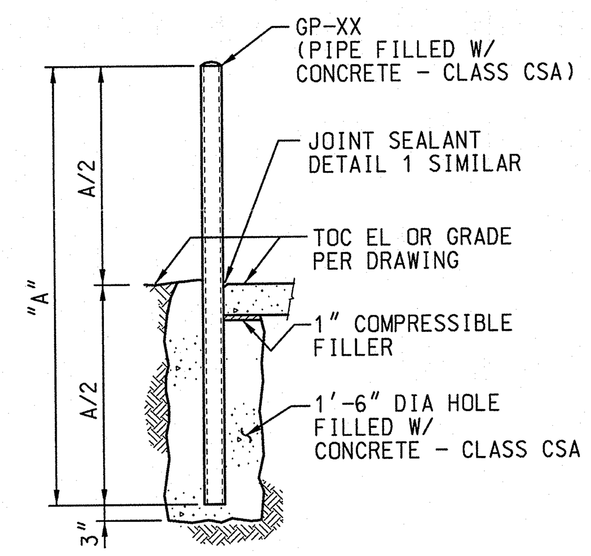

MARK	PIPE DIA/WT	LENGTH A	PIPE WT (LBS/FT)
GP-4	4 XS	7'-0"	15.0
GP-6	6 STD	7'-6"	19.0
GP-8	8 STD	8'-0"	28.6
GP-10	10 STD	9'-0"	40.5

TAG EACH GROUP WITH MARK AND DRAWING NUMBER

TYPICAL GUARD POST
DETAIL 5
½" = 1'-0"

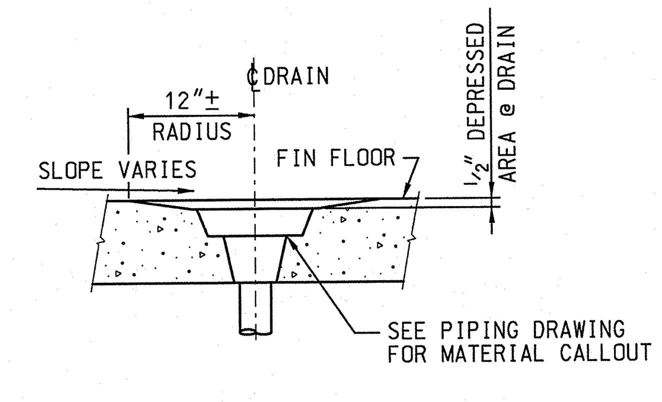

TYPICAL FLOOR DRAIN
DETAIL 6
1" = 1'-0"

REV	DATE	DESCRIPTION	By/Chk
0	10/31/06	APPROVED FOR CONSTRUCTION	REL/TST
			/
			/

NOTES

REFERENCE DRAWINGS

DRAWING NO.	DRAWING TITLE

IDAHO CLEANUP PROJECT
INTEGRATED WASTE TREATMENT UNIT

CONCRETE GENERAL NOTES
AND STANDARD DETAILS

Washington Group International
7800 E. Union Ave. - Denver, CO 80237 - (303) 843-2000

REVISION APPROVAL RECORD			REV 0		
DISCIPLINE	BY	DATE	DISCIPLINE	BY	DATE
ARCH.	RRL	10-31-06	MECHANICAL	[signature]	10/31/06
CIVIL	-	-	NUCLEAR	[signature]	
ELECTRICAL	[signature]	10/31/06	PIPING	[signature]	10/31/06
ENVIRON.	-	-	PROCESS	-	-
GEN. ARRANG.	-	-	QA / QC	[signature]	10-31-06
HVAC	[signature]	10/31/06	STRUCTURAL	TR	10-31-06
I & C		-	REMOTE HDL.	-	-
			SYS. ENG.	M	10/31/06

DRAWING STATUS				
ISSUED	REV	DATE	LDE	PEM
PRELIMINARY	C	10/19/06	TR	MP
APPROVED FOR CONSTRUCTION	0	10/31/06	TR	MP

NOT APPROVED FOR CONSTRUCTION UNLESS SIGNED & DATED. DESTROY ALL PRINTS BEARING EARLIER DATE &/OR REV.NO.

SIZE E — FOR DRAWING INDEX SEE DRAWING NO. 200-1696-01-923-632450

PROFESSIONAL ENGINEER — REGISTERED — 12007 — 10-31-06 — STATE OF IDAHO — TOM N. RICH

SCALE: AS NOTED	PLOT DATE 10/31/06	PROJECT NO. 28339	
DRAWN: REL	DATE 10/31/06	WBS: P.1.04.03.01	
DESIGNED: TR	DATE 10-31-06	SYSTEM:	QUALITY LEVEL: 4
CHECKED: TST	DATE 10/31/06	DRAWING NUMBER	REV
VERIFIED:	DATE	632451	0
APPROVED:	DATE	INDEX CODE NUMBER: AREA 200, TYPE 1696, CL 62, ORIG 923	SHEET S-1
CAD FILE NAME: 632451.dgn			

WGIDESIGN_FILE_PATH_AND_NAME_EXTENSION$
31-OCT-2006 13:00

INCHES / CENTIMETERS