Design Drawings
Poles, Inc.
Pentachlorophenol Pole Manufacturing
Plant Closure Plan

April 15, 2004

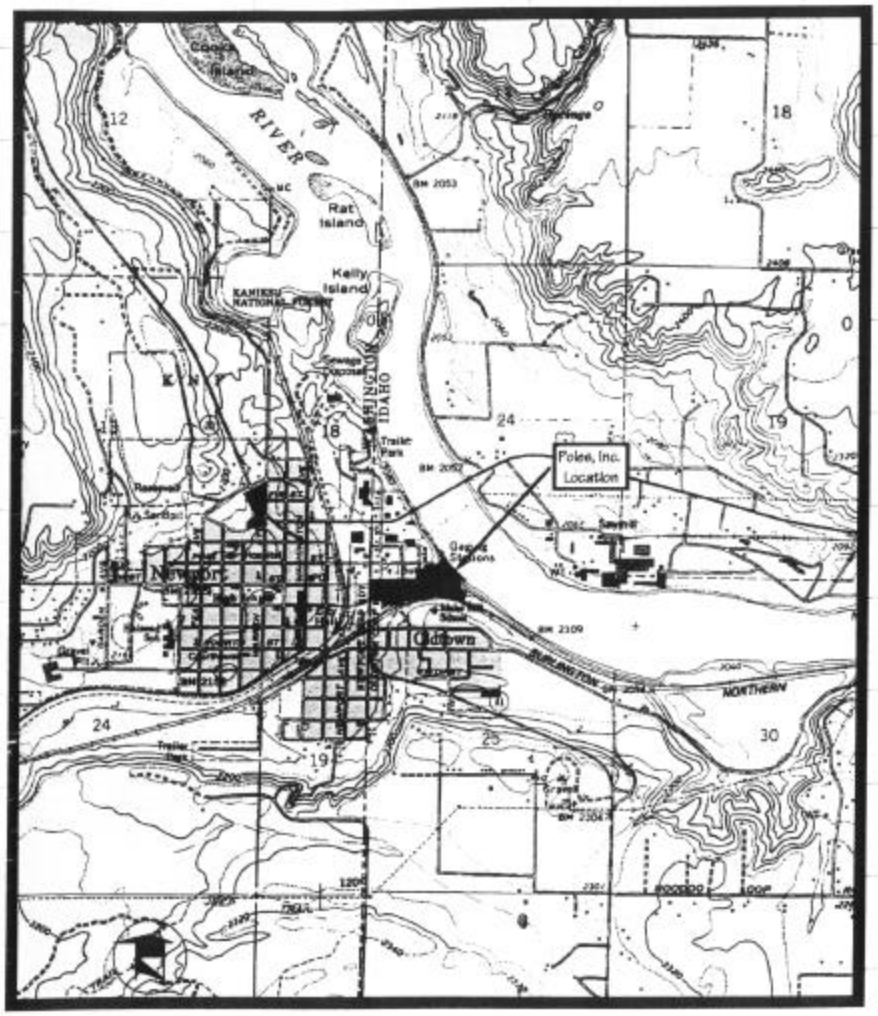

Index of Sheets

Sheet 1	Existing Site Plan
Sheet 2	Existing Treatment Building
Sheet 3	Treatment Building Demolition
Sheet 4	New Roof and Pole Construction
Sheet 5	Footing and Stem Wall Design
Sheet 6	East and West Building Elevations

Quantum Engineering and Geologic Consulting ◆South 2641 Silver Beach Loop ◆Coeur d'Alene, Idaho

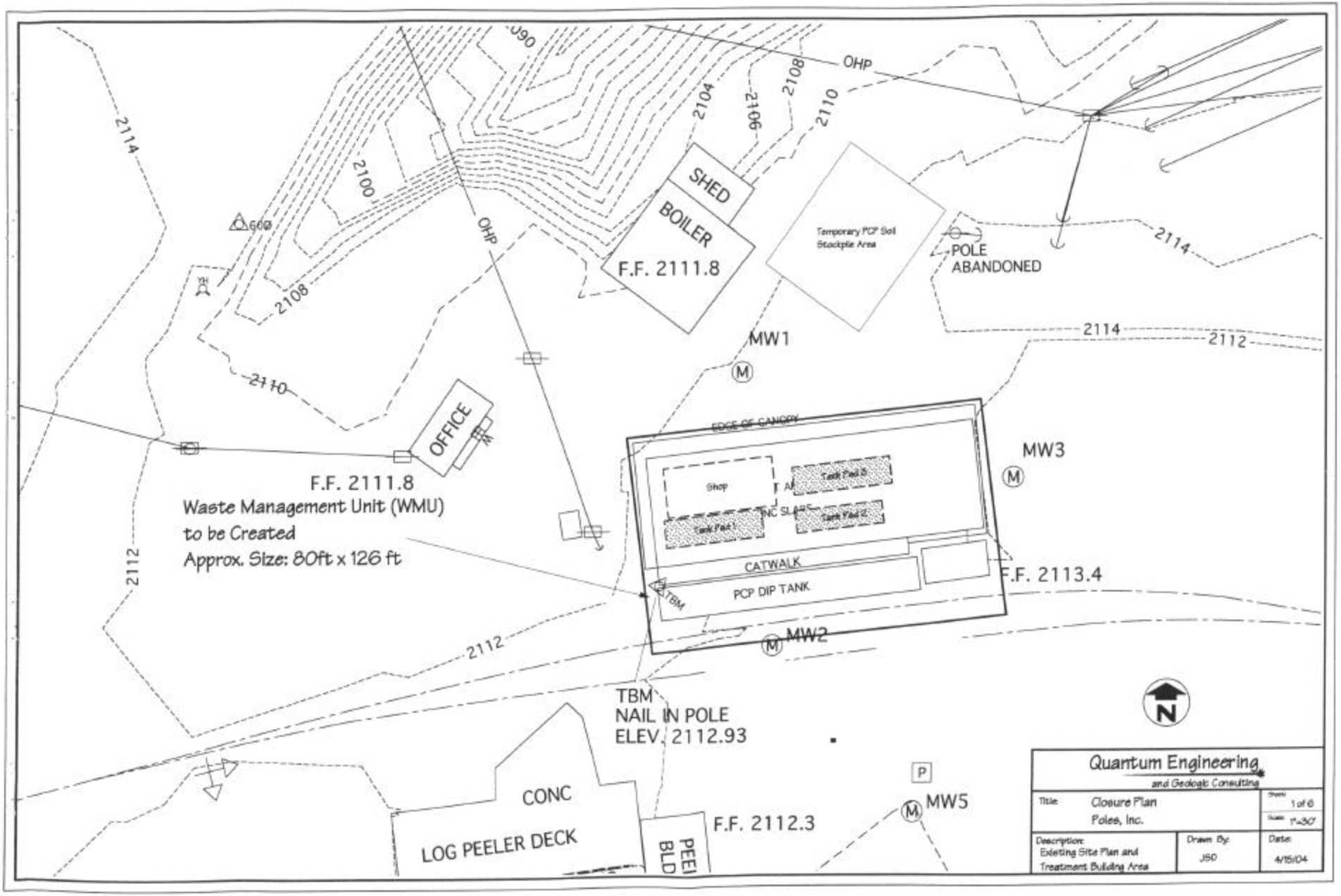
OHP
2090
2104
2106
2108
2110
2114
2100
2108
2110
2112
SHED
BOILER
F.F. 2111.8
Temporary PCP Soil Stockpile Area
POLE ABANDONED
MW1
OFFICE
F.F. 2111.8
Waste Management Unit (WMU)
to be Created
Approx. Size: 80ft x 126 ft
EDGE OF CANOPY
Shop
Tank Pad 3
Tank Pad 1
Tank Pad 2
CATWALK
PCP DIP TANK
TBM
MW3
F.F. 2113.4
MW2
TBM
NAIL IN POLE
ELEV. 2112.93
CONC
LOG PEELER DECK
PEEL BLD
F.F. 2112.3
MW5
N
Quantum Engineering
and Geologic Consulting
Title: Closure Plan
Poles, Inc.
Sheet 1 of 6
Scale 1"=30'
Description: Existing Site Plan and Treatment Building Area
Drawn By: JSD
Date: 4/15/04

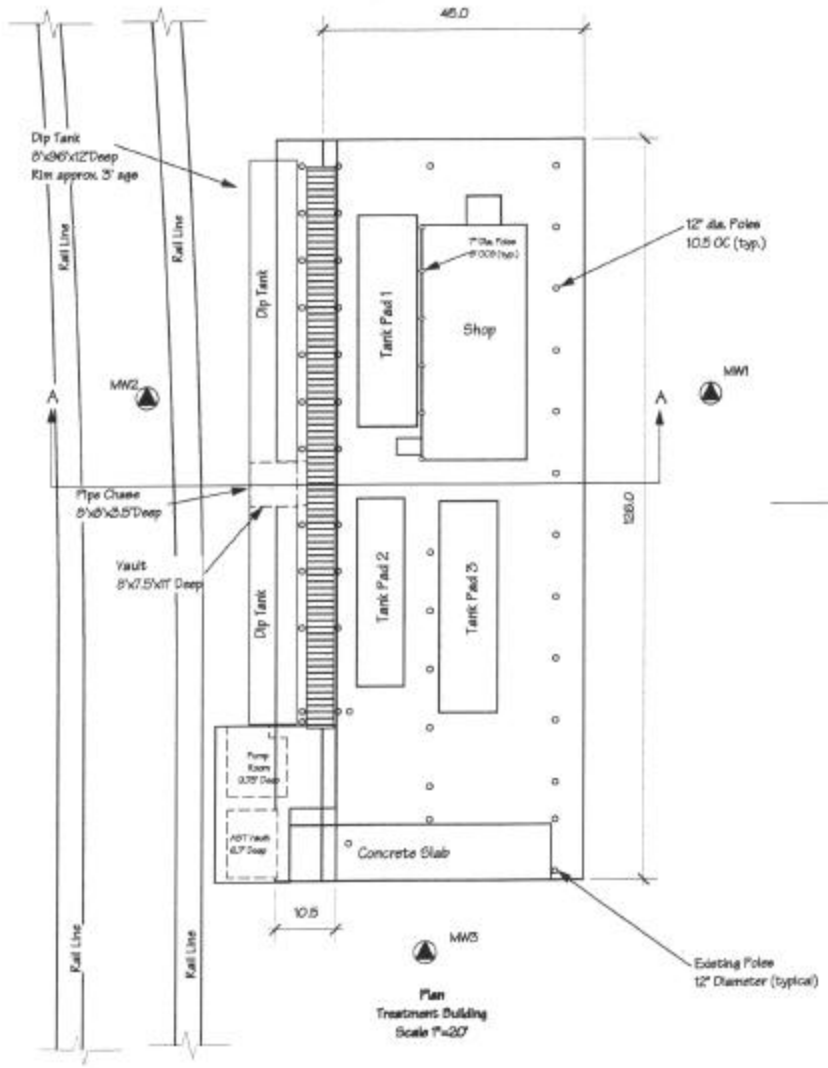

Plan
Treatment Building
Scale 1"=20'

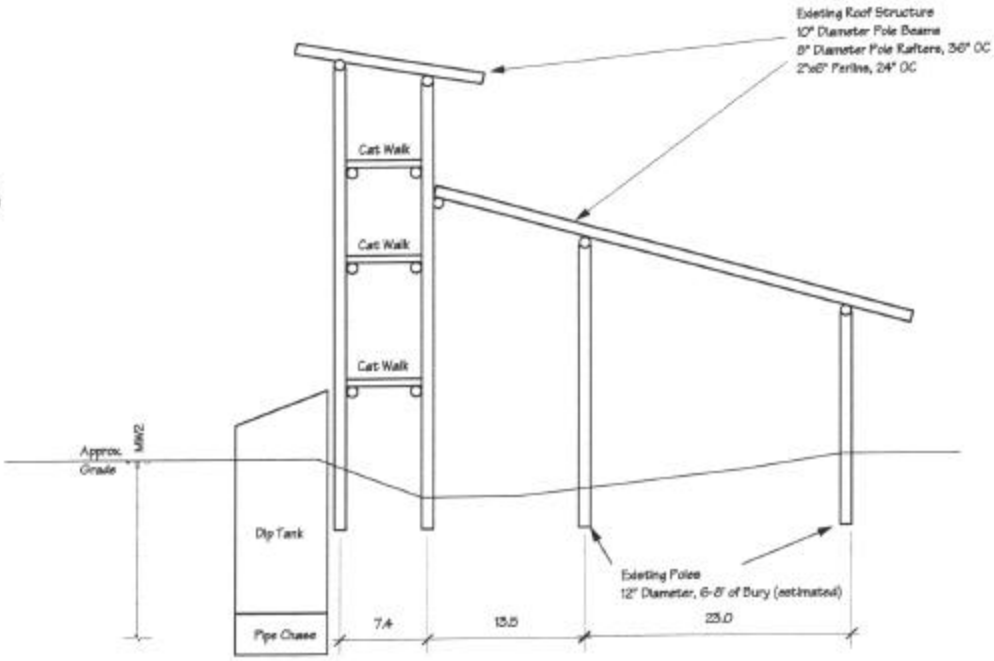

Section A-A'
Scale: 1"=10'

Notes:
1. Dimensions are approximate and may vary.
2. Contractor to verify all dimensions.

Quantum Engineering and Geologic Consulting		
TITLE: Closure Plan, Poles, Inc.		SHEET: 2 of 6
		SCALE: 1"=20'
DESCRIPTION: Existing Treatment Building Area	DRAWN BY: JSD	DATE: 4/15/04

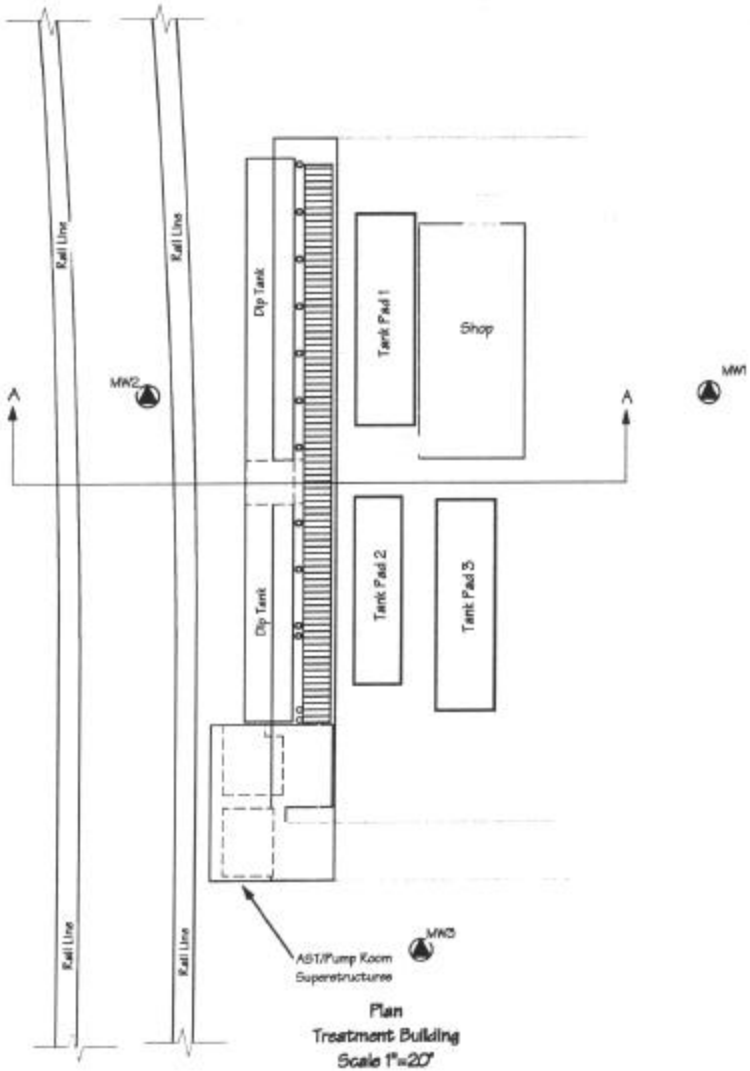

Plan
Treatment Building
Scale 1"=20'

Note: Items in grey to remain in place
Items in black to be removed

Notes:

1. Remove shop, AST containment, and pump room superstructures. Concrete foundations for each to remain.
2. Remove pole structures as shown this sheet and salvage for new pole construction.
3. Remove catwalk structures (3) as shown.
4. Remove dip tank lids and cut tank structure to grade. (Contractor to provide safety fencing for exposed dip tank)
5. Remove upper roof structure.
6. Shorten poles common to both upper and lower roofs to top of lower roof structure.
7. Remove tracks on southwest side of treatment building to facilitate new AOC building construction.
8. Remove Tank Pad #1, #2 and #3 and dispose at MSW landfill.
9. Remove perimeter fencing on existing structure.
10. Contractor to verify dimensions and locations.

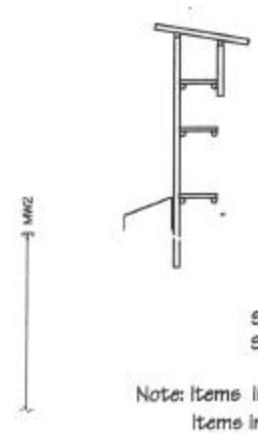

Section A-A'
Scale: 1"=20'

Note: Items in grey to remain in place
Items in black to be removed

Quantum Engineering
and Geologic Consulting

TITLE: Closure Plan Foles, Inc.		SHEET 3 Of 6
		SCALE 1"=20'
DESCRIPTION: Treatment Building Demolition	DRAWN BY: JSD	DATE 4/15/04

Notes:
1. Construct new roof structure 36 ft. by 126 ft. to meet existing roof structure at peak.
2. Construct new ridge cap 11 ft. by 126 ft.
3. Extend monitoring wells (MW2 and MW3 to new finish grades. (See sheet 5 for details of slab)
4. All workmanship and materials to meet current Idaho Building Codes.
5. All workmanship and materials to meet all local and state codes and regulations.

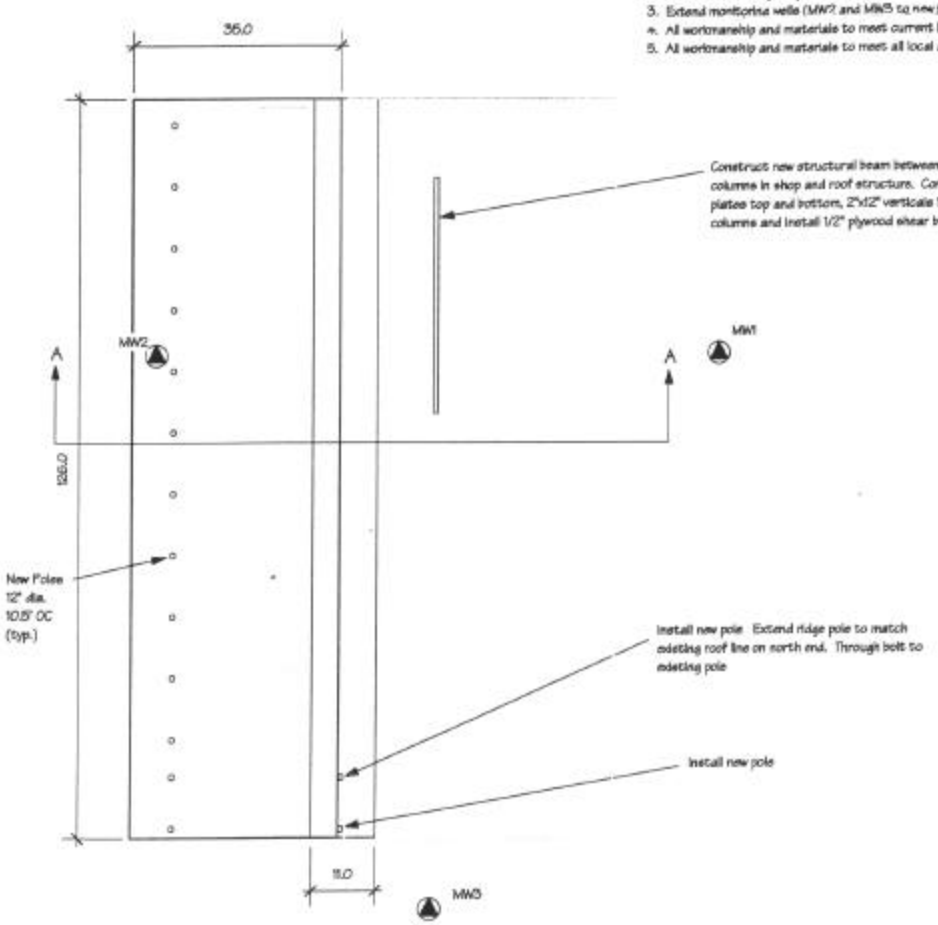

Plan
Treatment Building
Scale 1"=20'

Note: New roof and pole construction in black.

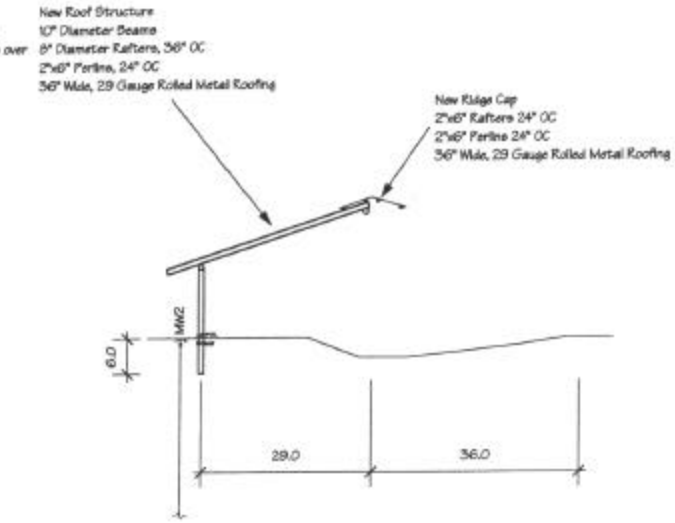

Section A-A'
Scale: 1"=20'

Note: New roof and pole construction in black.

Quantum Engineering
and Geologic Consulting

TITLE: Closure Plan Poles, Inc.		SHEET: 4 of 6
		SCALE: 1"=20'
DESCRIPTION: New Roof Structure Design	DRAWN BY: JSD	DATE: 4/15/04

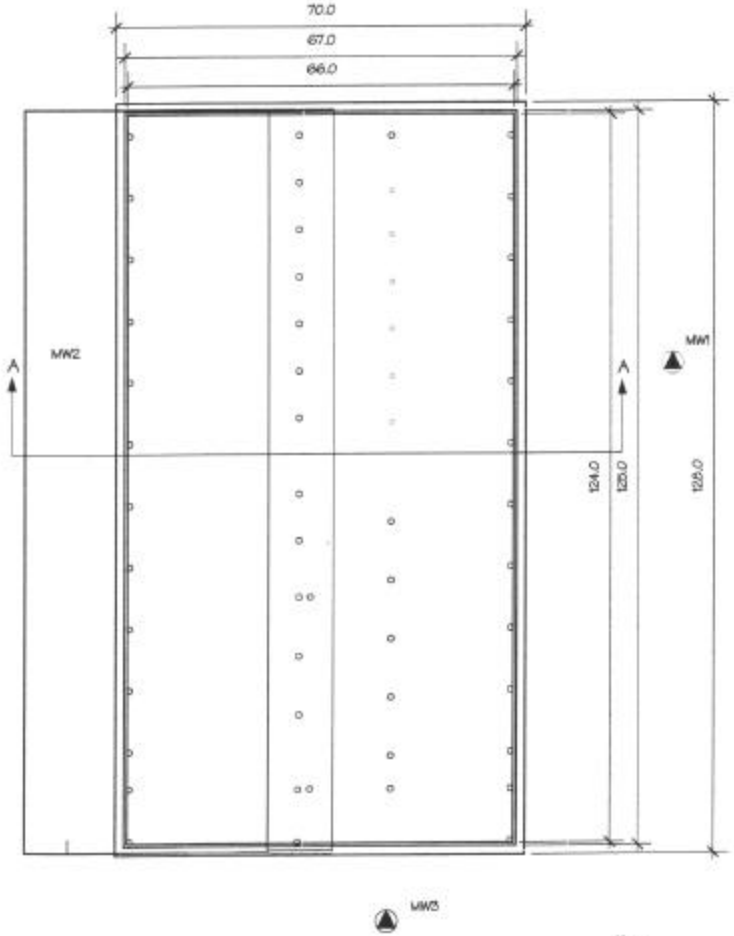

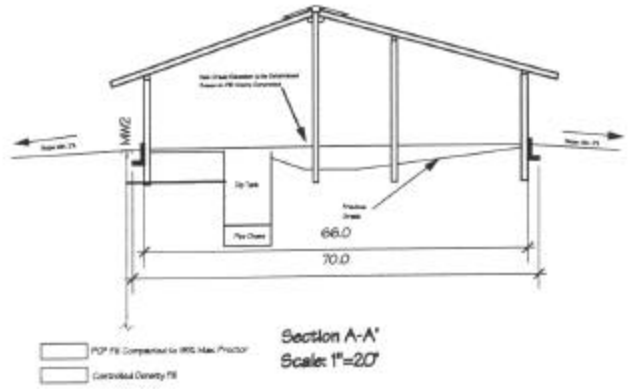

Section A-A'
Scale: 1"=20'

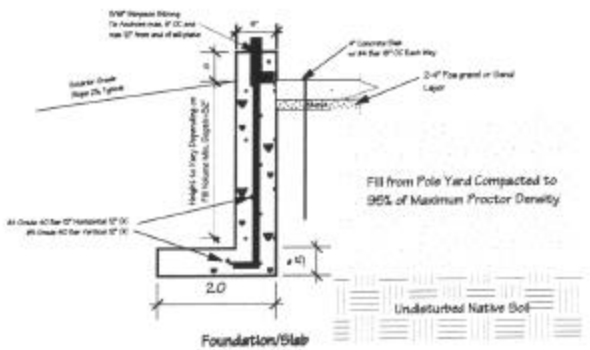

Foundation/Slab
Scale 1/2"=1'

Concrete Specifications:
Compressive Strength 28 day 3600 psi
Water/Cement Ratio maximum 0.45% by weight (mass)
Aggregate Size (maximum) 1 1/2 Inch (38.1 mm)
Air Entrained 3-6 percent
Slump – 3-5" Plus or minus 1 Inch

Notes:
1. Construct footing and stem wall on undisturbed soil with 32" cover over footing.
2. Extend and continue horizontal rebar around corners.
3. Place leveling layer of sand or pea gravel and construct 4" thick concrete slab with #4 rebar 18" OC each way.
4. Place and compact FCP pole yard soil at 95% maximum proctor density.
5. All new footing, foundation and slab construction to meet current Idaho Building Codes.
6. All workmanship and materials to meet current Idaho Building Codes.
7. All workmanship and materials to meet current local and state codes.
8. Add grade rings as needed MW2 and MW3 to meet new grade around building and establish 2% min. slope from AOC, all sides.

Quantum Engineering
and Geologic Consulting

TITLE: Closure Plan, Polee, Inc.		SHEET: 5 of 6
		SCALE: 1"=20'
DESCRIPTION: Slab and Stem Wall/Footing Design	DRAWN BY: JSO	DATE: 4/15/04

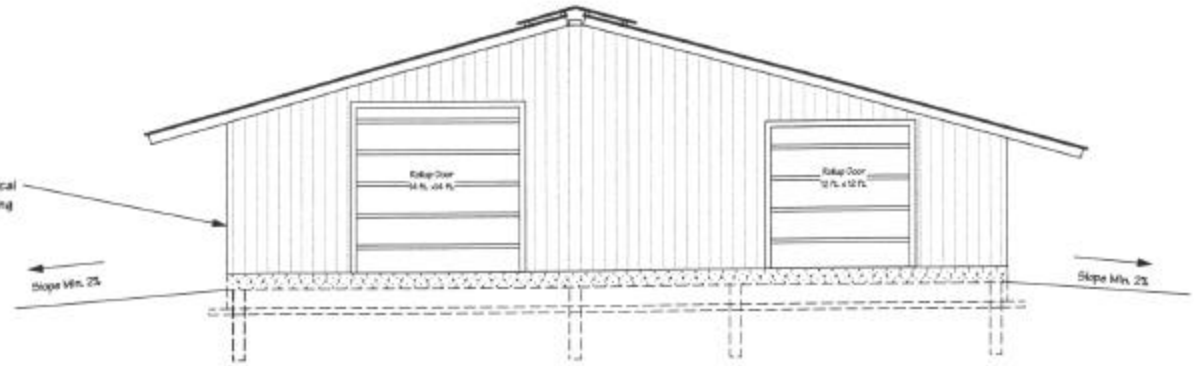

East Elevation
AOC Building
Exterior Completion
Scale: 1"=10'

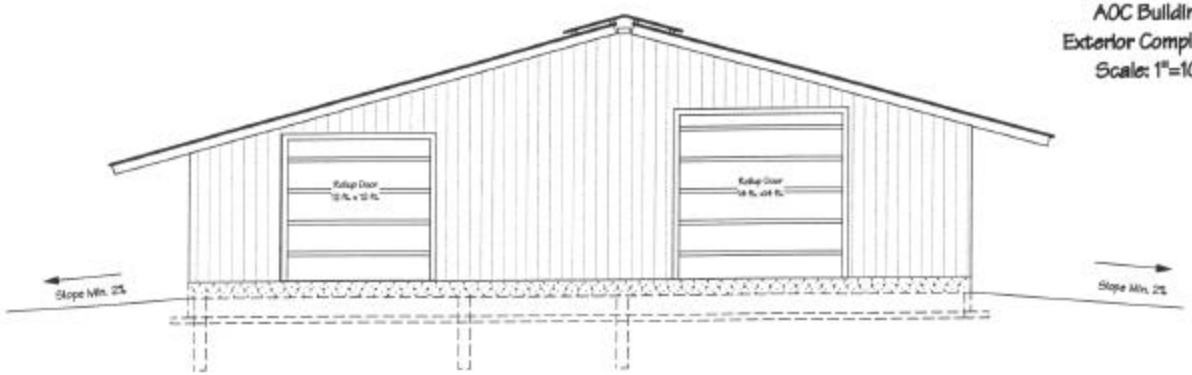

West Elevation
AOC Building
Exterior Completion
Scale: 1"=10'

Quantum Engineering
and Geologic Consulting

TITLE: Closure Plan, Poles, Inc.		SHEET: 6 OF 6
		SCALE: 1"=10'
DESCRIPTION: East and West Elevations, Building Enclosure and Doors	DRAWN BY: JSD	DATE: 4/15/04