RECEIVED
MAY 18 2012
DEPARTMENT OF ENVIRONMENTAL QUALITY
STATE A Q PROGRAM

BASIC AMERICAN FOODS

RECEIVED
MAY 18 2012
DEQ
By R. Greenwood

Application for Renewal of Tier I Air Operating Permit

Blackfoot Facility of Basic American Foods

May 2012

Coal Creek Environmental Associates, LLC
Bellevue, WA 98006

Project 120101.33

CONTENTS

1. INTRODUCTION 1
2. GENERAL PLANT INFORMATION 2
Products 2
Raw Materials 3
Production Processes 3
Materials Transport activities 3
Shipping and Receiving 3
Fuel Usage 3
General Description of Each Process Line 4
Plantwide Activities 4
Boilers 4
Process A 4
Process B 4
Process C 4
Changes in Processes and Operations Since the Current Tier I Permit was Issued 4
3. EMISSIONS INVENTORY AND DESCRIPTIONS OF EMISSIONS UNITS 6
Emissions Inventory 6
Insignificant Activities 6
Plant Processes 7
Plantwide Activities 7
Boilers 9
Process A 10
Process B 11
Process C 13
4. POTENTIALLY APPLICABLE REGULATORY REQUIREMENTS 15
Federal Requirements 15
Prevention of Significant Deterioration (40 CFR 52.21) 15
National Emission Standards for Hazardous Air Pollutants (40 CFR 61) 15
Maximum Available Control Technology Standards (40 CFR 63) 16
New Source Performance Standards (40 CFR 60) 16
Title IV Acid Rain Provisions 17
Title V Operating Permit (40 CFR Parts 70 and 71) 17

Compliance Assurance Monitoring (40 CFR 64) 17
Chemical Accident Prevention Programs (40 CFR 68) 18
Stratospheric Ozone Protection (40 CFR 82) 18
Idaho Requirements 18
Permit to Construct Program 18
Facility Emission Cap 18
Tier I Operating Permit 19
General Requirements 19
5. ENFORCEABLE LIMITS ON SOURCE OPERATIONS AND REQUIRED WORK PRACTICE STANDARDS 20
Plantwide Activities 20
Boilers 21
PTC P-050301 21
40 CFR 60, Subpart Dc 24
40 CFR 63, Subpart JJJJJJ (Area Source Boiler MACT) 25
Process A 26
Process B 26
Process C 27
6. COMPLIANCE CERTIFICATION 28
7. COMPLIANCE PLAN AND SCHEDULE 29
8. PERMIT SHIELD REQUEST 30

LIST OF TABLES

3-1. ..... Estimated Plantwide Potential Emissions of Criteria Pollutants
3-2. ..... Hazardous Air Pollutant Emission Factors for Plant Fuels
3-3. ..... Estimated Potential Plantwide HAP Emissions

LIST OF FIGURES

2-1. ..... Site Map
2-2 ..... Blackfoot Plant Site Plan
3-1. ..... Plantwide Process Schematic
3-2. ..... Process Schematic – Boilers
3-3. ..... Process Schematic – Process A
3-4. ..... Process Schematic – Process B
3-5a. ..... Process Schematic – Process C Part 1
3-5b. ..... Process Schematic – Process C Part 2
3-5c. ..... Process Schematic – Process C Part 3
3-5d. ..... Process Schematic – Process C Part 4
3-5e. ..... Process Schematic – Process C Part 5
3-5f. ..... Process Schematic – Process C Part 6
3-5g. ..... Process Schematic – Process C Part 7

Tables and Figures are located after Section 7

LIST OF APPENDICES

Appendix A..... Tier I Application General Forms
Appendix B..... DEQ Equipment Data Forms
Appendix C ..... Facility Emission Inventory
Appendix D ..... Identification of Insignificant Activities
Appendix E..... DEQ Form FRA and Regulatory Analysis for GHG Tailoring Rule and Boiler MACT
Appendix F..... Compliance Certifications and Demonstration Methodologies

1. INTRODUCTION

This document is an Application for renewal of Tier I Air Operating Permit No. T1-060315 ("the current Permit") for the Blackfoot Facility of Basic American Foods (BAF) located in Blackfoot, ID (AIRS Facility No. 011-00012). The current Permit will expire November 20, 2012. Per Condition 18 of the current Permit and IDAPA 58.01.01.313.03, BAF is required to submit an application for renewal of the current Permit no later than six months prior to expiration of the current permit, which would be May 20, 2012.

This application includes information required by IDAPA 58.01.01, Section 314 as well as supplemental information to aid in the analysis of the Blackfoot Facility for Tier I permitting purposes. This Section provides a general introduction to this Application, describing the overall content and organization. Section 2 provides an overview of plant processing activities. Section 3 provides information on emissions units and includes a plantwide facility emissions inventory. The emission inventory also identifies emissions units that are insignificant on the basis of size or production rate. Section 4 addresses the applicability of various regulatory programs to the Blackfoot Facility. Section 5 provides a detailed presentation of existing enforceable limits on source operation and required work practices. Compliance certification and compliance plans are presented in Sections 6 and 7, respectively. Section 8 is the Permit Shield Request. Tables and figures are located behind Section 8.

Forms and additional specific information required by DEQ appear in a series of Appendices. Appendix A contains DEQ's forms for Tier I Application Cover sheet and the facility general information form. The certification of the application by a BAF responsible official is included in Appendix A. Appendix B contains applicable DEQ equipment forms for significant emissions units. Appendix C presents a detailed facility-wide emission inventory. This is the backup to the plantwide facilities emission inventory presented in Section 3. Appendix D lists insignificant activities. The detailed review of potentially applicable requirements is presented in Appendix E. When applicability of a requirement has been reviewed in a previous permitting action and there has been no change in either the rule or the facility operations, in the interest of brevity the analysis will references the existing determination. Where a new rule has been adopted or modified or there has been a change in the facility or operations, a more detailed review will be conducted. Appendix G includes compliance certifications and demonstration methodologies. Finally, Appendix H contains excess emissions procedures.

2. GENERAL PLANT INFORMATION

The BAF Blackfoot Plant is located south of U.S. Highway 26 and about two miles northwest of Blackfoot. BAF's Blackfoot facilities include:

- A food drying and dehydrating plant; and
- A co-located research and development laboratory related to vegetable dehydrating and product development.

A portion of the Blackfoot Plant is leased to Idaho Fresh Cooperative as a fresh potato packing operation. This portion of the plant is operated by Idaho Gold and Liberty Produce, both of whom are district members of the Idaho Fresh Cooperative.

Figure 2-1 shows the plant location on a USGS map. Figure 2-2 is a site plan of the Blackfoot facilities.

The Blackfoot Plant produces a variety of dehydrated food products for both internal use and for customers. BAF uses a variety of dehydration technologies to produce products to meet exacting customer specifications.

PRODUCTS

Plant products are described below.

a) Dehydrated potato granules.

Potato granules are individual potato cells prepared from raw potatoes by cooking, followed by gentle drying. Granules typically range from 50 to 120 microns in size. Most of the granules produced at the Blackfoot Plant are used at the Blackfoot Plant; occasionally granules are shipped to other BAF plants for use in products produced at those plants. BAF can also sell granules as a product.

b) Formulated dehydrated food products.

Formulated products are prepared from various combinations of dried ingredients, fresh and fresh-cooked ingredients, and food additives. BAF dries these formulations to create final products.

c) Dehydrated whole and piece food products

BAF prepares dehydrated whole and piece food products by dehydrating cooked and/or blanched foods. These foods can be either whole vegetables or vegetable pieces. Piece products range up to several inches in diameter.

d) Animal feed.

Animal feed, consisting of food fractions and off-specification materials that are not suitable for use in other products, is produced as a co-product of other plant processes. BAF uses

various materials classification processes to segregate, collect, and transport animal feed. Animal feed is transferred directly to load out operations after collection without further processing.

Raw Materials

Plant raw materials include uncooked food products, dehydrated food products produced at this or other locations and various additives and flavorings used in plant products. BAF receives fresh potatoes both directly and from Idaho Gold and Liberty Produce.

Fresh potatoes can be either processed directly or stored in cellars on-site, pending packing or processing.

Production Processes

BAF uses a variety of drying and dehydration processes. Products are dried by contact with heated air. Drying air is heated either by direct-firing with natural gas or indirectly using steam heat exchangers. Air suspension unit processes are also used to classify materials and to remove unsuitable fractions from the production stream.

Materials Transport activities

Materials transport occurs both internally within a processing activity and externally to transfer materials between processes, to place them into or take them out of bulk storage, or to transport them to packaging and load out activities. BAF uses air suspension systems to transport granules and most formulated products; these suspension processes include air slides and pneumatic bulk transfer operations. BAF also uses belt and bucket conveyors at various locations in its operations to transport raw materials, products in processing, and finished products. All bucket and belt conveyors are entirely contained within enclosed buildings. BAF also uses wet flumes to transport raw potatoes. Forklifts are used to transfer tote containers within the plant.

Materials recovery units (primarily cyclones) are integral to the operation of all unit processes in which granules or formulated products are suspended in air.

Shipping and Receiving

Raw materials are received on site by truck. Granules can be received by rail as well as by truck. All shipments are by rail or truck. Trucks are also used to move potatoes to and from the on-site cellars.

Fuel Usage

Fuel usage at the plant is primarily for steam production, for operation of direct fired product dryers, and for space heating. Plant steam boilers can operate on natural gas, distillate (#2) oil, and residual (#6) oil. Direct fired product dryers and plant space heaters are fired by natural gas.

GENERAL DESCRIPTION OF EACH PROCESS LINE

For purposes of the Tier I Air Operating Permit, activities at the plant are divided into five process activities. Each of the processes is described generally below. Additional details of process operations are presented in Section 3.

Plantwide Activities

The "Plantwide Activities" process includes site activities that are plant-wide in nature or that are not associated with a specific production process at the plant. Plantwide activities processes include overall facility management, utility services, shipping and receiving, operation of potato storage cellars, space heating and cooling, analytical laboratories, and maintenance and grounds keeping activities.

Boilers

Three boilers provide process steam for the Blackfoot Plant from the combustion of fuel. Fuels combusted include natural gas, #2 fuel oil, and #6 fuel oil.

Process A

Process A produces dehydrated potato products via a series of cooling, drying, and materials separation processes. Drying heat is provided by both natural gas combustion and steam produced by the plant boilers.

Process B

Process B produces dehydrated potato products via a series of cooling, drying, and materials separation processes. Drying heat is provided by both natural gas combustion and steam produced by the plant boilers.

Process C

Process C produces dehydrated food products via a series of cooling, drying, and materials separation processes. Drying heat is provided by both natural gas combustion and steam produced by the plant boilers. Process C also includes materials transport and packaging processes.

CHANGES IN PROCESSES AND OPERATIONS SINCE THE CURRENT TIER I PERMIT WAS ISSUED

The current Permit was issued to the BAF Blackfoot facility on November 20, 2007. Since issuance of the current Permit, BAF has completed the following projects that involved obtaining a Permit to Construct (PTC) or otherwise established new facility operating requirements:

- Installing finish dryer CTZ

This project was completed in 2009. Idaho DEQ issued Permit to Construct P-2009.0042 for this project on August 26, 2009. The scope of this project included:

- Modifying the process layout for the process train that includes the CTQ dryer. Previously the CTQ dryer could be supplied either from the CBB predryer or from the CTU predryer. With completion of this project the CTQ is now supplied exclusively from the CBB predryer.
- Installing the new CTZ dryer and reconfiguring the production so that this new dryer would be fed only from the CTU predryer. The production rate of the new dryer is 2800 lb/hr and 15,698,000 lb/yr.

- Obtaining PTC FEC Permit P-2009.0043.

This permit was issued to BAF on January 20, 2011 as a PTC with Facility Emission Cap (FEC). The scope of this project included:

- Satisfying the PTC requirements for new or modified sources that potentially required a PTC but for which a PTC was not obtained prior to construction. Issuance of this PTC met the need to obtain a PTC for these modifications.
- Establishing a FEC for the facility.
- Creating additional facility operating requirements needed to demonstrate compliance with ambient air quality standards.

This permitting action was initiated as a Tier II FEC application, as required by the current Permit. Prior to issuance of the Tier II FEC permit, however, BAF and DEQ concurred that the permitting action was more appropriately handled as a PTC than as a Tier II.

3. EMISSIONS INVENTORY AND DESCRIPTIONS OF EMISSIONS UNITS

This section presents a plantwide emissions inventory, based on maximum potential emissions. The inventory includes emissions from both significant and insignificant point source emissions units.

Descriptions of emission units follow the emissions inventory. The discussions of emissions units are organized by plant process line.

EMISSIONS INVENTORY

Air emissions from the Blackfoot Plant are associated with the following activities:

- Products of combustion associated with process steam generation in plant boilers;
- Products of combustion associated with firing natural gas to supply heated air to dryers;
- Food and food product particulates generated by drying operations;
- Food product particulates incompletely recovered from air suspension materials transport processes.
- Conversion of sulfite to sulfur dioxide in drying processes.

Table 3-1 presents the potential to emit for NSR Regulated Air Pollutants associated with each emissions unit. Appendix C provides calculation details for the emission estimates in Tables 3-1 through 3-3, including emission factors selected, hourly emission rates, and calculation details. An electronic copy of the Excel spreadsheet used to create the tables in Appendix C is being provided separately via e-mail.

INSIGNIFICANT ACTIVITIES

Insignificant activities at the Blackfoot Facility fall into one of the following two categories:

1. Presumptively insignificant emissions units, as identified in IDAPA 58.01.01.317.01.
2. Insignificant activities on the basis of size or production rate.

Presumptively insignificant emissions units are omitted from the application in accordance with IDAPA 58.01.01.317.01.a.i.

Activities that are insignificant on the basis of size or production rate include a number of specific types of emissions units as listed in IDAPA 58.01.01.3107.02.b.i. This category also includes emission units or activities that meet the following criteria:

- Potential emissions less than or equal to the significant emission rate as defined in Section 006 of IDAPA 58.01.01; and

- Actual emissions less than or equal to ten percent (10%) of the levels contained in Section 006 of the definition of significant; and
- Emissions not exceeding one (1) ton per year of any hazardous air pollutant.

There are a number of emissions units at the Blackfoot Facility that meet these three criteria and are classed as insignificant on the basis of emission rate. In Table 3-1 the emissions units that are insignificant by application of these criteria are noted with an asterisk next to the emission unit name.

Appendix D includes a complete list of activities that are insignificant on the basis of size or production rate. BAF requests that the Tier I permit incorporate these determinations of insignificant activities.

PLANT PROCESSES

Plant production processes were listed in Section 2. Figure 3-1 is a plant-wide operations schematic that shows the overall relationships among these processes. Each of these processes is discussed in more detail below. The information presented for each process includes:

- A description of process operations
- A list of significant emissions units associated with the process. (Note that Table 3-1 lists all point source emissions units and stacks associated with a process).
- Identification and quantification of fuels, fuel use, raw materials, production rates, and operating schedules needed to determine or regulate emissions.
- Identification and description of air pollution control equipment and compliance monitoring devices and activities.

Plantwide Activities

Process Description

As noted previously the Plantwide activities process is all site activities that are plant-wide in nature or that are not associated with a specific production process at the plant. Plantwide activities processes include overall facility management, utility services, shipping and receiving, operation of potato storage cellars, space heating and cooling, analytical laboratories, and maintenance and grounds keeping activities.

Plant space heaters are designed and sized for comfort space heating during cold weather periods. The space heaters combust natural gas and are potential sources of carbon monoxide, nitrogen oxides, particulates, sulfur dioxide, volatile organics and certain HAPs and TAPs associated with fuel combustion. Many of these units provide direct-fired space heating, with products of combustion becoming part of plant air. During warm weather periods the heaters are not needed

and do not operate. In fact were the space heaters to operate in summer working conditions inside the plant would become unbearably hot. Accordingly, the space heaters operate at no more than 50 per cent of firing capacity on an annual basis. This is a practical and effective limit on operations, as higher operating rates are an operating condition that is contrary to design and that would be detected and corrected.

Plant air conditioning units operate during warm weather periods to maintain temperatures suitable for plant operations during warm weather periods. Plant air conditioning units use CFC refrigerants.

Plant roads are used for shipping and receiving of raw materials and finished goods and for transferring potatoes to and from on-site potato cellars. Site roads include both paved and unpaved surfaces.

Significant Emissions Units

Emissions units that are associated with the Plantwide Activities include building heating and air conditioning units, vehicle traffic on plant roads, and miscellaneous maintenance and operation activities. The aggregate burner capacity of all plant space heaters (including both significant and insignificant emissions units) is 72.3 MMBtu/hr. Solely for purposes of the air emissions inventory, all plant space heaters are aggregated into a single emissions unit with a burner capacity of 72.3 MMBtu/hr. No individual plant space heater is sufficiently large to be a significant emissions unit.

Refrigeration units are presumptively insignificant emissions units per IDAPA 58.01.01.317.01.a.i.(41). For purposes of the emissions inventory, all refrigeration units are aggregated into a single emissions unit.

Plant roads are fugitive emissions sources. The aggregate emissions potential from all 12 plant roads is 4.8 tpy and 3.1 tpy for PM and PM-10, respectively. No individual plant road exceeds 2.5 tpy of PM or 1.5 tpy of PM-10. Accordingly no plant roads are significant emissions units.

Operation and Production Information

All plant emissions units are insignificant emissions units.

Air Pollution Control and Compliance Monitoring

There are no air pollution controls or compliance monitoring controls that are specifically applicable to Plant emissions units.

Boilers

Process Description

Three boilers provide process steam for the Blackfoot Plant. The boilers operate pursuant to PTC P-050301, issued by the Idaho Department of Environmental Quality on September 16, 2005. Figure 3-2 is a process flow diagram for boiler operations.

The boilers are potential sources of nitrogen oxides, particulates, sulfur dioxide, volatile organics, and carbon monoxide. Minimal amounts of hazardous air pollutants and lead associated with fuel combustion are emitted from this process.

Significant Emission Units

All three boilers are significant emissions units.

Operating and Production Information

Boilers 1 and 2 combust #6 oil, #2 oil, or natural gas. Boiler 1 has a maximum heat rate of 55.2 MMBTU/hr, generating 45,500 lb/hr of steam. Boiler2 has maximum heat rate of 76.1 MMBTU/hr, with a 62,100 lb/hr steam rate. Boiler 3 combusts #2 oil or natural gas and can generate 30,000 lb/hr of steam while combusting 39.1 MMBTU/hr of fuel.

Additional data for each boiler are presented on DEQ Forms EU0 and EU5 in Appendix B.

Air Pollution Control Equipment and Compliance Monitoring Devices and Activities

When combusting fuel oil the exhausts from Boilers 1 and 2 are treated in a wet scrubbing system to remove particulates and sulfur dioxide. The scrubber is a venturi type system, Model 48x48-96HE, manufactured by Carbo-Tech Environmental Group, Inc. (Burlington, Ontario, Canada).

The scrubbing liquid is caustic soda solution. After passing through the contactor, the exhaust gases flow to a separator, where the scrubbing solution separates from the exhaust stream and collects at the bottom of the separator. A pump recirculates the scrubbing solution from the bottom of the separator to the venturi mixer. The pH of the scrubbing solution is continuously monitored, and caustic soda is added to the recirculation line as needed to maintain a pH of between 8 and 8.5 in the scrubbing solution.

Because of the presence of moisture in the scrubbed exhaust gas, operation of a Continuous Opacity Monitor is not feasible. BAF has obtained approval for a NSPS Subpart Dc Alternative to COMS for this project. The Alternative requires that each of the following operating parameters be maintained within the specifications established in the permit or specifications established through source testing under worse case normal conditions.

- Pressure drop across the scrubber
- Scrubbing solution pH
- Scrubbing solution flow rate.
- Fuel consumption
- Steam production (calculated)

When combusting fuel oil, sulfur dioxide emissions are continuously monitored with a Sick Maihak GM 31-1 in-situ SO2 gas analyzer and FLOWSIC 100 UMD volume flow measuring unit. Data acquisition and reporting software provide for reports to be generated as required by Permit PTC P-050301 and by 40 CFR 60, Subpart Dc.

Process A

Process Description

Process A produces dehydrated potato products. Raw material input to the process is cooked potatoes and food additives, including sulfites. Products are produced via a series of cooling, drying, and materials separation processes, as illustrated in the process flow diagram for Process A. (See Figure 3-3). Drying heat is provided by both natural gas combustion and steam produced by the plant boilers.

Process A also incorporates a "mix-back" loop within which most of the material arriving at the end of the production line is cycled back to an earlier point in the production line, with only a small portion of the material removed for pack-out. Consequently, unit processes within the mix-back loop have actual unit process loading rates that are substantially greater than the overall production line packout rate (*i.e.*, the amount of product released from the production line per unit time). Because of this cycling of material, the actual movement of material within the mix-back loop is assumed to be 8 times greater than the measured production line packout rate.

Emissions from Process A include both process emissions and products of combustion from those sources that combust natural gas as part of the process. Process emissions include:

- PM and PM-10, associated with entrainment and condensation of particulates in exhaust air streams; and
- Sulfur dioxide, associated with conversion of sulfites to sulfur dioxide.

Emissions that are products of natural gas combustion include CO, NOx, SO_2, PM, PM-10, VOC, Pb, and certain HAPs and TAPs.

Process A was constructed in the early 1960s.

Significant Emissions Units

Process A includes the following significant emissions units:

Emissions Unit	Description of Unit
DHT	DHT is a vent from a cyclone used to dry potato solids in suspension as part of the granules production process. The dryer is heated by natural gas combustion. The burners are rated at 7 MMBTU/hr.
DHU	DHU is a vent from a cyclone used to dry potato solids in suspension as part of the granules production process. The dryer is heated by natural gas combustion. The burners are rated at 7 MMBTU/hr.
DHZ	DHZ is a vent from a materials recovery cyclone that serves a fluidized bed used to dry potato solids as part of the potato granules production process. The dryer is heated by both steam and natural gas combustion. The burners are rated at 6 MMBTU/hr.

Additional data for these emissions units are presented on DEQ Forms EU0 in Appendix B.

Operating and Production Information

The maximum hourly feed rate for Process A is 25,000 pounds per hour, average hourly feed rate on the maximum day, with a maximum production rate of 4,200 pounds per hour, average hourly production on the maximum day. Within the mix-back loop process throughput rates are assumed to be 33,600 lb/hr. Process A can operate up to 8,760 hours per year. Maximum annual production is 23 million pounds. There are no alternate operating scenarios.

Air Pollution Control Equipment and Compliance Monitoring Devices and Activities

Process A does not have any required air pollution control equipment or compliance monitoring devices and activities.

Process B

Process Description

Process B produces dehydrated potato products. Raw material input to the process is cooked potatoes and food additives, including sulfites. Products are produced via a series of cooling, drying, and materials separation processes, as illustrated in the process flow diagram for Process B (Figure 3-4). Drying heat is provided by both natural gas combustion and steam produced by the plant boilers.

Process B also incorporates a "mix-back" loop within which most of the material arriving at the end of the production line is cycled back to an earlier point in the production line, with only a small portion of the material removed for pack-out. Consequently, unit processes within the mix-back loop have actual unit process loading rates that are substantially greater than the overall

production line packout rate (*i.e.*, the amount of product released from the production line per unit time). Because of this cycling of material, the actual movement of material within the mix-back loop is assumed to be 8 times greater than the measured production line packout rate.

Emissions from Process B include both process emissions and products of combustion from those sources that combust natural gas as part of the process. Process emissions include:

- PM and PM-10, associated with entrainment and condensation of particulates in exhaust air streams; and
- Sulfur dioxide, associated with conversion of sulfites to sulfur dioxide.

Emissions that are products of natural gas combustion include CO, NOx, SO_2, PM, PM-10, VOC, Pb, and certain HAPs and TAPs.

Process B was constructed in the early 1960s.

Significant Emissions Units

Process B includes the following significant emissions units:

Emissions Unit	Description of Unit
DUQ	DUQ is a vent from a cyclone used to dry potato solids in suspension. The dryer is heated by natural gas combustion. The burners are rated at 7 MMBTU/hr.
DUT	DUT is a vent from a cyclone used to dry potato solids in suspension. The dryer is heated by natural gas combustion. The burners are rated at 7 MMBTU/hr.
DUV	DUV is a vent that serves two materials recovery cyclones, each of which supports a fluidized bed that is used to dry potato solids. The dryers are heated by both steam and natural gas combustion. The gas burners are each rated at 6 MMBTU/hr, per dryer.
DQA	DQA is a vent from a cyclone used to dry potato solids in suspension. The dryer is heated by natural gas combustion. The burners are rated at 7 MMBTU/hr.
DQB	DQB is a vent from a cyclone used to dry potato solids in suspension. The dryer is heated by natural gas combustion. The burners are rated at 7 MMBTU/hr.

Additional data for these emissions units are presented on DEQ Forms EU0 in Appendix B.

Operating and Production Information

The maximum hourly feed rate is 50,000 pounds per hour, average hourly feed rate on the maximum day, with a maximum production rate of 8,400 pounds per hour, average hourly production on the maximum day. Within the mix-back loop process throughput rates are assumed to be 67,200 lb/hr. Process B can operate up to 8,760 hours per year. Maximum annual production is 46 million pounds. There are no alternate operating scenarios.

Air Pollution Control Equipment and Compliance Monitoring Devices and Activities

Process B does not have any required air pollution control equipment or compliance monitoring devices and activities.

Process C

Process Description

Process C produces dehydrated food products. It also includes materials transport and packaging processes. Raw material inputs to Process C include cooked foods, previously dehydrated foods, and food additives, including sulfites.

Products are produced via a series of cooling, drying, and materials separation processes, as illustrated in the process flow diagram for Process C (Figure 3-5a through 3-5g). Drying heat is provided by both natural gas combustion and steam produced by the plant boilers.

Emissions from Process C include both process emissions and products of combustion from those sources that combust natural gas as part of the process. Process emissions include:

- PM and PM-10, associated with entrainment and condensation of particulates in exhaust air streams; and
- Sulfur dioxide, associated with conversion of sulfites to sulfur dioxide.

Emissions that are products of natural gas combustion include CO, NOx, SO_2, PM, PM-10, VOC, Pb, and certain HAPs and TAPs.

Process C has been constructed in stages commencing in the early 1960's and continuing through 2009.

Significant Emissions Units

Process C includes the following significant emissions units:

Emissions Unit	Description of Unit
CXX	CXX is a vent for one of three materials recovery cyclones serving a formulated potato products dryer. This vent serves the front portion of the dryer, which is heated by natural gas combustion (4.4 MMBTU/hr). Air delivered to the dryer also goes through a 6.05 MMBTU/hr preheater that supports both the CXX and CYY stacks.
CYY	CYY is a vent for two of three materials recovery cyclones serving a formulated potato products dryer. This vent serves primarily the middle and rear portions of the dyer. These portions of the dryer are heated by natural gas combustion (6.6 MMBTU/hr). Some of the air delivered to this vent also goes through a 6.05 MMBTU/hr preheater that supports both the CXX and CYY stacks. Another portion of the air delivered to this vent passes through a 1.2 MMBTU/hr preheater.
CHX	CHX is a vent for one of a series of belt dryers used to dry potato piece products. The overall drying process is heated by natural gas (10.3 MMBTU/hr) and steam. There is also a 2.9 MMBTU/hr natural gas fired preheater.

Emissions Unit	Description of Unit
HEB and HNL	HEB and HNL are vents from a single belt dryer used to dry potato piece products. The dryer is heated by steam, with a 6 MMBTU/hr natural gas fired preheater.
CNV	CNV is a vent for a predryer supporting the dryer served by stacks CTQ, CTR, CTS, and CTT. The dryer is heated by natural gas (12 MMBtu/hr burner capacity.)
CNW	CNW is a vent for a predryer supporting the dryer served by stacks CTQ, CTR, CTS, and CTT. The dryer is heated by natural gas (12 MMBtu/hr burner capacity.)
CTU	CTU is a vent for a belt dryer used to dry potato piece products. The dryer is heated by steam.

Additional data for these emissions units are presented on DEQ Forms EU0 in Appendix B.

Operating and Production Information

The aggregate maximum hourly feed rate for dehydration activities is 207,000 pounds per hour, average hourly input on the maximum day, with an aggregate maximum production rate of 41,500 pounds per hour, average hourly production on the maximum day. The aggregate maximum annual production from dehydration activities is 242,000,000 pounds. The packaging and materials transport activities can operate at an aggregated rate of up to 160,000 pounds per hour, with aggregated maximum material handling of 500,000,000 pounds per year. Process C can operate up to 8,760 hours per year. There are no alternate operating scenarios.

Air Pollution Control Equipment and Compliance Monitoring Devices and Activities

Process C does not have any required air pollution control equipment or compliance monitoring devices and activities. The burners associated with stack CTZ are low-NOx burners.

4. POTENTIALLY APPLICABLE REGULATORY REQUIREMENTS

The Blackfoot Facility is subject to various federal and state air pollution control regulations. This section provides an overview of various potentially applicable regulations and discusses the applicability of those programs to facility operations. Section 5 provides a detailed discussion of enforceable limits and required work practices as they apply to specific facility operations.

Applicability of many of these regulations to the Blackfoot Facility has previously been reviewed by DEQ during previous permitting activities for the Blackfoot Facility. In these cases the discussion references documents containing prior applicability reviews. When an applicable regulation has not previously been reviewed in a permitting action, this status is noted and an applicability evaluation for that regulation is provided in Appendix E.

FEDERAL REQUIREMENTS

Prevention of Significant Deterioration (40 CFR 52.21)

The Blackfoot Facility is not one of the facilities types designated under 40 CFR 52.21(b) to have a 100 tpy criteria pollutant major source emission threshold for purposes of the Prevention of Significant Deterioration (PSD) program. As such the PSD applicability threshold for the Blackfoot Facility is 250 tons per year for any criteria pollutant except for greenhouse gases (GHGs). For GHGs the PSD applicability threshold is 100,000 tons per year. PTC FEC Permit No, P-2009.0043 includes enforceable emission limits that restrict emissions of criteria pollutants to less than 250 tpy.

Boiler and burner firing capacity at the Blackfoot Facility is sufficiently large that potential carbon dioxide emissions exceed 100,000 tons per year. Thus the Blackfoot facility is subject to the PSD program as the PSD rules are applied to sources via the "Tailoring Rule"[1]. Presently there are no immediate regulatory obligations associated with triggering PSD coverage via the tailoring rule.

See Appendix E for a detailed regulatory analysis of Subpart JJJJJJ.

National Emission Standards for Hazardous Air Pollutants (40 CFR 61)

EPA has published various National Emission Standards for Hazardous Air Pollutants (NESHAPs) in 40 CFR 61. NESHAPs regulate hazardous air pollutant (HAP) emissions from various stationary sources.

[1] 75 Federal Register 106 (Thursday, June 3, 2010) pp. 31514++

The applicability of NESHAPs to the Blackfoot Facility was evaluated in January 2011 in connection with the issuance of Permit No. P-2009-0043. At that time it was determined that no NESHAPs were applicable to the facility.[2] Since that time there have been no changes or additions to NESHAPs that specifically apply to the Blackfoot Facility and there have been no changes at the Blackfoot Facility that would newly subject it to existing NESHAPs. Demolition and renovation activities at the Blackfoot Facility are subject to provisions of the asbestos NESHAP; compliance with provisions of the asbestos NESHAP are included in the existing Tier I Permit.

Maximum Available Control Technology Standards (40 CFR 63)

EPA has published various Maximum Available Control Technology (MACT) standards in 40 CFR 63. MACT standards identify required emissions controls that apply to specific categories of stationary sources. Often applicability or coverage of a MACT will vary depending on whether the affected source is a "major" source or "area source" of HAP emissions. A major source of HAPs is source that emits or has the potential to emit 10 tons per year (tpy) or more of any single HAP or 25 tpy or more of all HAPs aggregated. An area source is any HAP source that is not a major source. As noted in Section 3 above, total HAP emissions from the Blackfoot Facility are less than 4 tpy. Accordingly, the Blackfoot Facility is an area source of HAPs.

The applicability of MACT standards to the Blackfoot Facility was evaluated in January 2011 in connection with the issuance of Permit No. P-2009-0043. At that time it was determined that no MACT standards were applicable to the facility.[3]

Since that review was completed, EPA has promulgated emissions control standards for boilers and process heaters at 40 CFR 63, Subpart DDDDD, "National Emission Standards for Major Sources: Industrial/Commercial/Institutional Boilers and Process Heaters", and at Subpart JJJJJJ, "National Emission Standards for Area Sources: Industrial/Commercial/Institutional Boilers". Subpart DDDDD is not applicable because the Blackfoot Facility is not a major source. As an area HAP source, Subpart JJJJJJ is potentially applicable to the Blackfoot Facility. Subpart JJJJJJ does regulate oil-fired boilers at area sources and hence is applicable to the Blackfoot Facility.

See Appendix E for a detailed regulatory analysis of Subpart JJJJJJ.

New Source Performance Standards (40 CFR 60)

New Source Performance Standards (NSPS) apply to new, modified, or reconstructed facilities and source categories. The NSPS are codified at 40 CFR 60.

Applicability of NSPS to the Blackfoot Facility was evaluated in September 2005 in connection with the issuance of Permit No. P-050301. At that time it was determined that 40 CFR 60,

---

[2] *"Statement of Basis, Permit to Construct P-2009.0043, Basic American Foods, Blackfoot Plant, Blackfoot, ID"*, January 20, 2011.

[3] *Ibid.*

Subpart Dc was applicable to Boiler 2.[4] Subpart D was modified February 27, 2006; the revisions included creating new particulate emissions limits for oil-fired boilers with heat rates greater than 8.7 MMBTU/hr. Applicability of these added provisions of Subpart Dc was evaluated when the current Permit was issued in 2007. Accordingly there is no need to update the analysis of Subpart Dc for this renewal.

Title IV Acid Rain Provisions

Title IV of the federal Clean Air Act regulates sulfur dioxide and oxides of nitrogen emissions from fossil fuel-fired electrical generation facilities. Because the Blackfoot Facility does not generate electricity it is not subject to the Title IV Acid Rain Provisions.

Title V Operating Permit (40 CFR Parts 70 and 71)

Title V of the federal Clean Air Act established an operating permit program that applies to facilities with potential annual emissions exceeding 100 tons of a regulated criteria pollutant, 10 tons of a single HAP, or 25 tons of aggregated HAP emissions. (A Title V permit is also sometimes known as a Part 70 or Part 71 permit.) As of July 1, 2011, under the GHG tailoring rule Title V applicability is also triggered if greenhouse gas emissions exceed 100,000 tons per year. Affected sources are required to apply for and obtain a Title V air operating permit. The Blackfoot Facility is a Title V facility because potential emissions of CO, NOx, SO_2, PM, PM-10, and PM-2.5 all exceed 100 tons per year. The facility is also a Title V source under operation of the GHG tailoring rule because potential carbon dioxide emissions exceed 100,000 tons.

EPA has delegated implementation of the Title V program to DEQ. Under Idaho's delegated program, a Title V permit is a Tier One Operating Permit.

Compliance Assurance Monitoring (40 CFR 64)

The Compliance Assurance Monitoring (CAM) rules are codified in 40 CFR 64. The compliance assurance monitoring program applies to emissions units that:

- Are located at a major source that is required to obtain a Part 70 or 71 (i.e., Title V) permit;
- Are subject to an emission limit;
- Use a control device to achieve compliance with that limit; and
- Have pre-control emissions that exceed 100 percent of the major source threshold.

The CAM rules implement provisions to assure that emissions units of these types have continuous monitoring procedures in place to assure that emissions control unit is properly performing. Emissions that already have a continuous compliance demonstration method included in a Part 70 or 71 permit are exempted.

[4] *"Air Quality Permitting Statement of Basis, PTC No. P-050301 and Tier I Operating Permit No. T1-050308, Basic American Foods, Blackfoot, ID"*, September 12, 2005.

Boilers 1 and 2 are potentially subject to the CAM rule when combusting oil. However, PTC No. P-050301 includes provisions that provide continuous compliance demonstration for these boilers when combusting oil. These provisions have also been incorporated into the current Permit.

The CAM rule does not apply to Boilers 1 and 2 when combusting natural gas because when firing natural gas there is no control device in use.

The CAM rule does not apply to Boiler 3 whether combusting fuel or oil because there is no control device on Boiler 3.

Chemical Accident Prevention Programs (40 CFR 68).

Owners/operators of stationary sources subject to risk management program rules shall prepare and register a risk management program (RMP) in accordance with rules to be adopted by the U.S. EPA. The Blackfoot Facility is subject to the RMP Program because of on-site storage of gaseous chlorine. Compliance with provisions of the Chemical Accident Prevention Program are included in the existing Tier I Permit.

Stratospheric Ozone Protection (40 CFR 82).

Subpart F of 40 CFR 82 requires that emissions of class I and class II refrigerants and their substitutes shall be reduced to the lowest achievable level by complying with applicable standards for recycling and emissions reduction pursuant to 40 CFR Part 82, Subpart F, Recycling and Emissions. Because the BAF has refrigeration units that use affected refrigerants, these rules are applicable to the Blackfoot Facility. Compliance with provisions of the Stratospheric Ozone Protection Program are included in the existing Tier I Permit.

IDAHO REQUIREMENTS

Permit to Construct Program

Since the current Permit was issued, BAF has obtained PTC No. P-2009.0042 for the addition of a new finish dryer on one of its production lines. In January 2011 the Blackfoot Facility received Permit No. P-2009.0043, which is a PTC FEC permit. Under provisions of IDAPA 58.01.01.181 BAF can make facility changes under the FEC without obtaining a PTC for the change by demonstrating that the change will not unacceptably impact air quality.

Facility Emission Cap

As noted previously, the Blackfoot Facility operates under a FEC. The FEC caps emissions of most criteria pollutants, and allows modifications to be made under the FEC in accordance with FEC for demonstrating that the change will not cause unacceptable air quality impacts.

Tier I Operating Permit

The Tier I Operating Permit program is Idaho's program to implement the Federal Title V permit program under a delegation from EPA. This program is applicable to the Blackfoot Facility.

General Requirements

Various general requirements are applicable to facility operation, including:

- Fugitive Dust - IDAPA 58.01.01.651
- Toxic Air Pollutants - IDAPA 58.01.01.161
- Sulfur Content of Fuels - IDAPA 58.01.01.725-729
- Odors - IDAPA 58.01.01.776
- Open Burning - IDAPA 58.01.01.603
- Particulate matter emissions from new process equipment - IDAPA 58.01.01.701
- Particulate matter emissions from existing process equipment - IDAPA 58.01.01.702

5. ENFORCEABLE LIMITS ON SOURCE OPERATIONS AND REQUIRED WORK PRACTICE STANDARDS

This section discusses enforceable requirements that limit facility emissions either directly or by governing operating practices. The discussion is organized by process.

PLANTWIDE ACTIVITIES

Permit No. P-2009.0043 establishes a Facility Emissions Cap for the Blackfoot Facility. Enforceable limits on source operation established by the Facility Emissions Cap are presented below.

- The permit authorizes changes to the facility that increase emissions of criteria pollutants for those changes that comply with the terms and conditions of this permit and that meet the requirements of IDAPA 58.01.01.181. The exemption criteria in IDAPA 58.01.01.220-222 are not applicable to changes in design or equipment at the facility that result in any change in the nature or amount of emissions, provided that BAF complies with the conditions of Sections 3 through 8 of the permit and meets the requirements of IDAPA 58.01.01.181.
- Plantwide emissions of PM_{10}, SO_2, NO_X, CO, and VOC shall not exceed any corresponding facility emissions cap (FEC) limits listed below.

FEC EMISSIONS LIMITS

Source Description	PM_{10}	SO_2	NO_X	CO	VOC
	T/yr[1]	T/yr[1]	T/yr[1]	T/yr[1]	T/yr[1]
Total Facility Emissions Cap	128	161	235	235	5.1

[1] Tons per rolling 12-month period.

Permit No. P-2009.0043 also establishes a compliance schedule requiring that within three years of permit issuance the Blackfoot Facility implement activities intended to ensure that the PM-10 emissions from the facility do not cause or significantly contribute to a violation of the NAAQS for PM-10. Limits on source operations associated with this schedule are presented below.

- Unless an alternative compliance method has been demonstrated by Permittee and approved by DEQ the Permittee shall remove and render inoperable the following exhaust stacks at this facility:

EXHAUST STACKS PROPOSED FOR REMOVAL

Exhaust Stack
CHI
CHK

DKV
DRY
DSK
DSO
DUU

- Unless an alternative compliance method has been demonstrated by Permittee and approved by DEQ the Permittee shall increase the following exhaust stacks height at this facility to 90 feet or remove the stack from operation:

EXHAUST STACKS PROPOSED FOR INCREASED HEIGHT

Exhaust Stack
CHX
CXX
DHT
DHU
DHZ
DQA
DQB
DUQ
DUT
DUV

- The exhaust stacks presented in both the Exhaust Stacks Proposed For Removal and the Exhaust Stacks Proposed For Increased Stack Heights permit conditions shall be identified in a manner that will allow a DEQ representative to positively identify each individual stack.

BOILERS

Boiler operations are subject to enforceable emissions limits and required operating practices contained in PTC P-050301. Boiler operations are also subject to work practice standards and management practices of 40 CFR 63, Subpart JJJJ (Area Source Boiler MACT). These requirements are listed below:

PTC P-050301

PTC P-050301 was issued in conjunction with refiring of Boilers 1 and 2 to combust #6 oil. PTC P-050301 replaced PTC No. P-040300, issued on March 22, 2004, and includes emissions and operating limits applicable to all three boilers. PTC P-050301 incorporates the NSPS provisions of 40 CFR 60 Subpart Dc that are applicable to Boiler 2. (Boiler 1 is not subject to Subpart Dc.) By

extending the NSPS continuous emissions monitoring provisions to include Boiler 1 as well, PTC P-050301 also provides compliance assurance monitoring coverage for Boiler 1.

Provisions of PTC P-050301 that limit emissions and source operations are presented below.

- Hourly and annual emissions of PM_{10}, SO_2, NOx, and CO from Boilers 1, 2, and 3 shall not exceed the following limits

Criteria Pollutant Emission Limits[a] - Hourly (lb/hr) and Annual[b, c] (T/yr)

Source Description	PM10		SO2		NOx		CO	
	lb/hr	T/yr	lb/hr	T/yr	lb/hr	T/yr	lb/hr	T/yr
Boiler 1	—	—	—	—	—	—	4.6	—
Boiler 2	—	—	—	—	—	—	6.1	—
Boiler 3	0.30	—	1.9	—	5.4	—	1.8	—
Combined Emissions from Boilers 1 and 2	5.7	—	45.3	—	61.9	—	—	—
Combined Emissions from Boilers 1, 2 and 3	—	18.3	—	145	—	198	—	46

[a] As determined by a pollutant specific U.S. EPA reference method, or DEQ approved alternative, or as determined by DEQ's emission estimation methods used in this permit analysis.

[b] As determined by multiplying the actual or allowable (if actual is not available) pound per hour emission rate by the allowable hours per year that the process(es) may operate(s), or by actual annual production rates.

[c] T/yr is tons of emissions per any consecutive 12-month period

- NO_x emission from Boilers 1 and 2 shall each not exceed 96.64 pounds per 1000 gallons of fuel when #6 oil is combusted.
- When combusting fuel oil in Boiler 2, SO_2 emissions from Boiler 2 are limited to 0.5 lb/MMBtu, or, alternatively, the sulfur content of the fuel shall not exceed 0.5 wt percent. This limit also applies to Boiler 1 if the exhausts from Boilers 1 and 2 are merged ahead of a single scrubber.
- Visible emissions from Boiler 2 shall not exceed 20 percent opacity (6-minute average), except for one 6-minute period (average) per hour of not more than 27 percent opacity. This limit also applies to Boiler 1 if the exhausts from Boilers 1 and 2 are merged ahead of a single scrubber.
- Visible emissions from Boilers 1, 2, and 3 may exceed 20 percent opacity for no more than an aggregate of three minutes in any 60-minute period.
- Combined emissions of nickel from the exhaust stacks of Boilers 1 and 2 may not exceed the following limits:

TAP	Limit for Combined Emissions from Boilers 1 and 2[a, b, c]
Nickel	240 lb/yr

[a] As determined by a pollutant specific U.S. EPA reference method, or DEQ approved alternative, or as determined by DEQ's emission estimation methods used in this permit analysis.

[b] As determined by multiplying the actual or allowable (if actual is not available) pound per hour emission rate by the allowable hours per year that the process(es) may operate(s), or by actual annual production rates.

[c] lb/yr is pounds of emissions per any consecutive 12-month period

- PM emissions may not exceed 0.015 gr/dscf (corrected to 3% oxygen by volume) when combusting gas fuel and 0.050 gr/dscf (corrected to 3% oxygen by volume) when combusting liquid fuel.
- Boilers 1 and 2 may burn natural gas, distillate oil, or residual oil. Boiler 3 may burn natural gas fuel as primary fuel and low sulfur distillate oil as secondary fuel.
- The sulfur content of fuels burned in the boilers shall not exceed the following amounts:
  - Distillate oil burned in Boiler 3 shall not exceed 0.05% sulfur by weight;
  - Distillate oil burned in Boiler 1 and Boiler 2 shall not exceed 0.5% sulfur by weight
  - Residual oil burned in Boiler 1 and Boiler 2 shall not exceed 1.75% sulfur by weight
- The quantity of natural gas combusted in Boiler 3 shall not exceed 328 million standard cubic feet (MMscf) per year, based on any consecutive 12-month period.
- The quantity of distillate oil combusted in Boiler 3 shall not exceed 393,120 gallons per year, based on any consecutive 12-month period.
- The combined quantity of residual oil combusted in Boiler 1 and Boiler 2 shall not exceed 15,384 gallons per day and 4,097,682 gallons per year, based on any consecutive 12-month period.
- Whenever residual oil is combusted in Boiler 1 or Boiler 2, the combined quantity of steam produced by all three boilers shall not exceed 80,000 pounds per hour, based on a daily average.
- A wet scrubbing system shall be used to control emissions of SO_2 and PM_{10} from Boiler 1 and Boiler 2 as follows:
  - Emissions of SO_2 and PM_{10} from Boiler 1 shall be controlled using a wet scrubber when fuel oil is combusted. When Boiler 1 combusts natural gas, wet scrubbing of the Boiler 1 exhaust is not required.
  - Emissions of SO_2 and PM_{10} from Boiler 2 shall be controlled using a wet scrubber when fuel oil is combusted. When Boiler 2 combusts natural gas, wet scrubbing of the Boiler 2 exhaust is not required.
  - When Boiler 2 combusts distillate or residual oil, Boiler 2 shall exhaust through the stack that serves Boiler 1. When Boiler 2 combusts natural gas, Boiler 2 may exhaust through its own stack.

- BAF shall install, calibrate, operate and maintain equipment to measure each of the following operating parameters for the wet scrubbing system. When the wet scrubbing system is required to be operated, each operating parameter shall be maintained within the specifications established in the O&M manual:
  - Pressure drop across the scrubber, or DEQ-approved alternative monitoring, for ensuring dispersion and mixing of scrubbing solution with air;
  - Scrubbing solution pH; and
  - Scrubbing solution flow rate.
- Within 60 days after startup of the wet scrubbing systems, BAF shall have developed an O&M manual for the wet scrubbing system, which describes the procedures that will be followed to comply with the PTC General Provisions and the manufacturer specifications for the air pollution control device. At a minimum the following items shall be addressed in the manual:
  - The manufacturer's recommended minimum and maximum values, or DEQ-approved alternatives, for each of the following operating parameters: pressure drop, for ensuring dispersion and mixing of the scrubbing solution with the air stream; the scrubbing solution pH; and the scrubbing solution flow rate.
  - Inspection checklists for items that will be periodically inspected while the treatment system is operating, including frequency of inspection.
  - Inspection checklist for items that will be inspected when the device is taken out of operation and physically opened for inspection (e.g., internal components), including frequency of these internal inspections.
  - Periodic planned maintenance for the control devices.

  The contents of the O&M manual shall be based on manufacturer's information to the extent practical. When the manufacturer's information is not used (e.g., a DEQ-approved alternative or performance test information is used in lieu of manufacturer information), this shall be explained in the manual. The O&M manual shall remain onsite at all times and shall be made available to DEQ representatives upon request.
- The burners in each boiler shall be tuned annually to maintain efficient fuel combustion.
- At all times, including periods of startup, shutdown, and malfunction, BAF shall, to the extent practicable, maintain and operate Boiler 2 including associated air pollution control equipment in a manner consistent with good air pollution control practice for minimizing emissions in accordance with 40 CFR 60.11(d).

40 CFR 60, Subpart Dc

Most applicable portions of 40 CFR 60 Subpart Dc are incorporated into PTC P-050301 and are not repeated in this discussion. However, amendments to Subpart Dc that were enacted in

February 2007 are not addressed in PTC P-050301. The amendments created the following applicable Subpart Dc emission limitation:

- When combusting fuel oil, particulate matter emissions from Boiler 1 may not exceed 13 ng/J (0.030 lb/MMBtu) heat input, except during periods of startup, shutdown, or malfunction in accordance with 40 CFR 60.43c(d).

40 CFR 63, Subpart JJJJJJ (Area Source Boiler MACT)

The Area Source Boiler MACT (40 CFR 63 Subpart JJJJJJ) was adopted in March 2011. As existing oil-fired units, the Blackfoot Facility boilers are subject to work practice standards of the Area Source Boiler MACT, but are not subject to emissions limits. See Appendix E for a detailed regulatory applicability analysis of Subpart JJJJJJ.

Applicable requirements of Subpart JJJJJJ are summarized below.

- The boilers must be tuned biennially, with each biennial tune-up conducted no more than 25 months after the previous tune-up. Tune-up requirements include::
  - As applicable, inspect the burner, and clean or replace any components of the burner as necessary (burner inspection may be delayed until the next scheduled unit shutdown, but each burner must be inspected at least once every 36 months).
  - Inspect the flame pattern, as applicable, and adjust the burner as necessary to optimize the flame pattern. The adjustment should be consistent with the manufacturer's specifications, if available.
  - Inspect the system controlling the air-to-fuel ratio, as applicable, and ensure that it is correctly calibrated and functioning properly.
  - Optimize total emissions of carbon monoxide. This optimization should be consistent with the manufacturer's specifications, if available.
  - Measure the concentrations in the effluent stream of carbon monoxide in parts per million, by volume, and oxygen in volume percent, before and after the adjustments are made (measurements may be either on a dry or wet basis, as long as it is the same basis before and after the adjustments are made).

  The first tune-up must be completed no later than March 21, 2012. If the unit is not operating on the required date for a tune-up, the tune-up must be conducted within one week of startup.
- A one-time energy assessment must be performed by a qualified energy assessor. The energy assessment must include:
  - A visual inspection of the boiler system,
  - An evaluation of operating characteristics of the facility, specifications of energy using systems, operating and maintenance procedures, and unusual operating constraints,

- Inventory of major systems consuming energy from affected boiler(s),
- A review of available architectural and engineering plans, facility operation and maintenance procedures and logs, and fuel usage,
- A list of major energy conservation measures,
- A list of the energy savings potential of the energy conservation measures identified,
- A comprehensive report detailing the ways to improve efficiency, the cost of specific improvements, benefits, and the time frame for recouping those investments.

  The energy assessment must be completed by March 21, 2014. An energy assessment completed on or after January 1, 2008, that meets or is amended to meet the energy assessment requirements will satisfy the energy assessment requirement.

PROCESS A

There are no limits on source operations nor are there any required work practice standards for Process A. Emissions from Process A are subject only to the following general limits established by regulations:

- PM emissions

  A source operating prior to October 1, 1979 may not discharge PM in excess of the amount shown by the following equations, where E is the allowable emission from the entire source in pounds per hour, and PW is the process weight in pounds per hour.

  - If PW is less than 17,000 lb/hr, $E = 0.045(PW)^{0.6}$
  - If PW is equal to or greater than 17,000 lb/hr, $E = 1.12(PW)^{0.27}$

- Visible emissions

  Visible emissions from any point of emission may exceed 20 percent opacity for no more than an aggregate of three minutes in any 60-minute period.

PROCESS B

There are no limits on source operations nor are there any required work practice standards for Process B. Emissions from Process B are subject only to the following general limits established by regulations:

- PM emissions

  A source operating prior to October 1, 1979 may not discharge PM in excess of the amount shown by the following equations, where E is the allowable emission from the entire source in pounds per hour, and PW is the process weight in pounds per hour.

  - If PW is less than 17,000 lb/hr, $E = 0.045(PW)^{0.6}$

- If PW is equal to or greater than 17,000 lb/hr, $E = 1.12(PW)^{0.27}$

- Visible emissions

  Visible emissions from any point of emission may exceed 20 percent opacity for no more than an aggregate of three minutes in any 60-minute period.

PROCESS C

DEQ Permit No. P-2009.0043 establishes limits on the operation of the dryer associated with stack CTZ. These limitations are presented below.

- The PM10, SO2, NOX, CO, and VOC emissions from the stack of finish dryer CTZ shall not exceed any corresponding emissions rate limits listed below.

NATURAL GAS-FIRED FINISH DRYER CTZ EMISSIONS LIMITS[1]

Source Description	PM_{10}		SO_2		NO_X		CO		VOC	
	lb/hr	T/yr[2]	lb/hr	T/yr[2]	lb/hr	T/yr[2]	lb/hr	T/yr[2]	lb/hr	T/yr[2]
Finish Dryer CTZ	0.58	1.63	0.12	0.36	0.20	0.88	1.43	6.24	0.06	0.26

1. In absence of any other credible evidence, compliance is assured by complying with this permit's operating, monitoring and record keeping requirements.
2. Tons per consecutive 12-calendar month period.

- The finish dryer shall only combust natural gas as fuel.
- The dehydrated food products production rate for the finish dryer shall not exceed 2,800 lb/hr.
- The dehydrated food products production rate for the finish dryer shall not exceed 15,698,000 lb/yr in any consecutive 12-calendar months.

Emissions from Process C are subject to the following general limits established by regulations:

- PM emissions

  A source operating prior to October 1, 1979 may not discharge PM in excess of the amount shown by the following equations, where E is the allowable emission from the entire source in pounds per hour, and PW is the process weight in pounds per hour.

  - If PW is less than 17,000 lb/hr, $E = 0.045(PW)^{0.6}$
  - If PW is equal to or greater than 17,000 lb/hr, $E = 1.12(PW)^{0.27}$

- Visible emissions

  Visible emissions from any point of emission may exceed 20 percent opacity for no more than an aggregate of three minutes in any 60-minute period.

6. COMPLIANCE CERTIFICATION

The Blackfoot Facility is currently in compliance with all applicable air quality regulations. Appendix H provides a detailed analysis of specific applicable requirements, including descriptions of how compliance status was determined, and what the continuing compliance demonstration procedures will be.

7. COMPLIANCE PLAN AND SCHEDULE

As noted in Section 5 the Blackfoot Facility operates under a compliance schedule issued as part of Permit No. p-2009.0043. BAF is in compliance with the timelines of that schedule.

The only changes in applicable federal or state rules that might come into effect during the permit term that BAF is aware of are possible changes in the Boiler MACT rules for area sources. The possible changes to the rules that EPA has announced it is considering will not significantly affect BAF's compliance status.

Should any new requirements come into effect during the life of the permit, BAF will adhere to the compliance schedule provided in the rule.

8. PERMIT SHIELD REQUEST

In submitting this Application for a Tier I Permit, BAF requests that the Tier I permit include a Permit Shield. In accordance with IDAPA 58.01.01.325, BAF requests that the Permit Shield state that compliance with the terms and conditions of the Tier I operating permit, including those applicable to all alternative operating scenarios and trading scenarios, shall be deemed compliance with all of the following

- Applicable requirements as of the date of permit issuance that are specifically identified in the Tier I operating permit and have a corresponding term or condition in the Tier I operating permit.
- Non-applicable requirements.

TABLES

Table 3-1
Potential to Emit for NSR Regulated Air Pollutants

Production Process	Stack Identification	Estimated Annual Emissions, tons								
		CO	NOX	SO2	PM	PM-10	VOC	Lead	CO2e	GHG
Boilers	Boiler 1	-	-	-	9.56	-	1.3	-	28,453	28,626
Boilers	Boiler 2	-	-	-	11.80	-	1.8	1.45E-03	39,215	39,454
Boilers	Boiler 3	-	-	-	1.71	-	0.9	3.28E-04	20,122	20,245
Boilers	Boilers 1 and 2	-	-	-	-	-	-	-	-	-
Boilers	Boilers 1, 2, and 3	46.0	198.0	145.0	-	18.3	-	-	-	-
A	DHQ*	-	-	-	1.44	1.38	-	-	-	-
A	DHT	12.3	2.4	0.3	6.48	5.06	0.2	1.50E-05	3,607	3,629
A	DHU	12.3	2.4	0.3	6.48	5.06	0.2	1.50E-05	3,607	3,629
A	DHZ	6.8	1.3	0.5	10.67	7.63	0.1	1.29E-05	3,092	3,111
A	DKV*	-	-	-	1.85	1.08	-	-	-	-
A	DKW*	-	-	-	0.06	0.03	-	-	-	-
B	DXS*	-	-	-	0.83	0.76	-	-	-	-
B	DUO*	-	-	-	0.83	0.76	-	-	-	-
B	DPY*	-	-	-	0.83	0.76	-	-	-	-
B	DPZ*	-	-	-	0.83	0.76	-	-	-	-
B	DUQ	12.3	2.4	0.3	6.48	5.06	0.2	1.50E-05	3,607	3,629
B	DUT	12.3	2.4	0.3	6.48	5.06	0.2	1.50E-05	3,607	3,629
B	DUV	13.7	2.7	1.0	5.32	3.58	0.3	2.58E-05	6,184	6,221
B	DQA	12.3	2.4	0.3	6.48	5.06	0.2	1.50E-05	3,607	3,629
B	DQB	12.3	2.4	0.3	6.48	5.06	0.2	1.50E-05	3,607	3,629
B	DUY*	-	-	-	0.11	0.07	-	-	-	-
B	DUZ*	-	-	-	0.11	0.07	-	-	-	-
B	DSO*	-	-	0.1	1.22	1.06	-	-	-	-
B	DSK*	-	-	-	0.34	0.18	-	-	-	-
B	DRY*	-	-	-	0.18	0.09	-	-	-	-
C	ALB*	-	-	0.1	0.68	0.44	-	-	-	-
C	ALT*	-	-	-	0.06	0.03	-	-	-	-
C	ALQ*	-	-	0.1	0.36	0.28	-	-	-	-
C	ALY*	-	-	-	0.02	0.01	-	-	-	-
C	ALX*	-	-	-	0.11	0.05	-	-	-	-
C	ALV*	-	-	0.1	1.12	0.72	-	-	-	-
C	ALW*	-	-	0.1	0.59	0.46	-	-	-	-
C	AEV*	3.8	0.7	0.1	0.74	0.48	0.1	7.09E-06	1,700	1,711
C	AEW*	-	-	0.1	0.46	0.34	-	-	-	-
C	AG*	-	-	-	0.03	0.01	-	-	-	-
C	CIR_RTC*	-	-	4.1	1.72	1.72	-	-	-	-

Table 3-1
Potential to Emit for NSR Regulated Air Pollutants

Production Process	Stack Identification	Estimated Annual Emissions, tons								
		CO	NOX	SO2	PM	PM-10	VOC	Lead	CO2e	GHG
C	CHV*	-	-	-	0.11	0.03	-	-	-	-
C	CXX	11.9	2.6	1.4	9.86	7.51	0.3	2.30E-05	5,527	5,560
C	CYY	10.3	1.5	1.4	8.32	7.16	0.2	1.62E-05	3,878	3,901
C	CHX*	6.2	2.7	0.1	1.99	1.49	0.2	1.68E-05	4,030	4,054
C	CHY*	3.7	1.6	0.2	0.69	0.50	0.1	9.92E-06	2,381	2,395
C	CHZ*	1.8	0.8	0.2	0.50	0.26	0.1	4.85E-06	1,165	1,172
C	TEE*	-	-	0.2	0.17	0.07	-	-	-	-
C	TEM*	-	-	0.2	0.17	0.07	-	-	-	-
C	HEB	2.0	1.3	1.1	7.12	6.17	0.3	2.31E-05	5,555	5,589
C	HNL	0.6	0.4	0.2	1.70	1.37	0.1	6.91E-06	1,659	1,669
C	CBB*	1.7	0.3	0.4	0.95	0.79	0.0	3.22E-06	773	778
C	CTQ	4.6	0.9	0.3	0.90	0.63	0.1	8.60E-06	2,065	2,077
C	CTR	7.5	1.5	0.3	0.94	0.61	0.2	1.41E-05	3,395	3,416
C	CTS	10.0	2.0	0.2	0.35	0.19	0.2	1.89E-05	4,525	4,553
C	CTT	11.0	2.2	0.2	0.38	0.16	0.2	2.08E-05	4,998	5,029
C	CNV	13.7	2.7	0.2	0.59	0.58	0.3	2.58E-05	6,184	6,221
C	CNW	13.7	2.7	0.2	0.61	0.59	0.3	2.58E-05	6,184	6,221
C	CTU	-	-	0.5	4.49	3.96	-	-	-	-
C	CTZ*	0.7	0.5	0.4	1.49	1.00	0.3	2.32E-05	5,565	5,599
C	TCD*	2.3	0.4	0.5	0.15	0.15	0.0	4.29E-06	1,031	1,037
C	TCO*	-	-	-	0.15	0.15	-	-	-	-
C	TAC*	1.4	0.3	0.1	0.80	0.69	0.0	2.68E-06	644	648
C	TAH*	1.4	0.3	0.1	0.80	0.69	0.0	2.68E-06	644	648
C	EUW*	-	-	-	0.02	0.02	-	-	-	-
C	SUF*	-	-	-	0.02	0.02	-	-	-	-
C	DSX*	-	-	-	0.07	0.04	-	-	-	-
C	EGS*	-	-	-	0.08	0.04	-	-	-	-
C	EGT*	-	-	-	0.08	0.04	-	-	-	-
C	FIF*	-	-	-	0.13	0.13	-	-	-	-
Total - Point Sources		**248.4**	**241.4**	**161.6**	**136.15**	**106.51**	**8.3**	**2.16E-03**	**180,609**	**181,708**

*** Denotes insignificant emissions unit.**

Table 3-2
Hazardous Air Pollutant Emission Factors for Plant Fuels

Air Pollutant	Emission Factor									
	#6 Oil, lb/1000 gal				#2 Oil, lb/1000 gal				Natural Gas, lb/MMBTU	
	Uncontrolled	Reference	Control Efficiency (Wet Scrubber)	Controlled	Uncontrolled	Reference	Control Efficiency (Wet Scrubber)	Controlled	Uncontrolled (based on 1020 BTU/scf)	Reference
POM	1.20E-03	AP-42, Table 1.3-8 (average)		1.20E-03	3.30E-03	AP-42, Table 1.3-8		3.30E-03	8.65E-08	AP-42, Table 1.4-3. Summation of individual POM components
Benzene	2.14E-04	AP-42, Table 1.3-9		2.14E-04					2.06E-06	AP-42, Table 1.4-3
Dichlorobenzene									1.18E-06	AP-42, Table 1.4-3
Formaldehyde	4.25E-02	AP-42, Table 1.3-8 (average)		4.25E-02	4.80E-02	AP-42, Table 1.3-8 (average)		0.048	7.35E-05	AP-42, Table 1.4-3
Hexane									1.76E-03	AP-42, Table 1.4-3
Toluene	6.20E-03	AP-42, Table 1.3-9		6.20E-03					3.33E-06	AP-42, Table 1.4-3
ethyl benzene	6.36E-05	AP-42, Table 1.3-9		6.36E-05						
o-Xylene	1.09E-04	AP-42, Table 1.3-9		1.09E-04						
1,1,1-Trichloroethane	2.36E-04	AP-42, Table 1.3-9		2.36E-04						
Antimony	5.25E-03	AP-42. Table 1.3-11	50%	2.63E-03						
Arsenic	1.32E-03	AP-42. Table 1.3-11	50%	6.60E-04	5.48E-04	AP-42, Table 1.3-10 and assuming 0.137 MMBTU/gal	50%	0.000274	1.96E-07	AP-42, Table 1.4-4

Table 3-2
Hazardous Air Pollutant Emission Factors for Plant Fuels

Air Pollutant	Emission Factor									
	#6 Oil, lb/1000 gal				#2 Oil, lb/1000 gal				Natural Gas, lb/MMBTU	
	Uncontrolled	Reference	Control Efficiency (Wet Scrubber)	Controlled	Uncontrolled	Reference	Control Efficiency (Wet Scrubber)	Controlled	Uncontrolled (based on 1020 BTU/scf)	Reference
Beryllium	2.78E-05	AP-42. Table 1.3-11	50%	1.39E-05	4.11E-04	AP-42, Table 1.3-10 and assuming 0.137 MMBTU/gal	50%	0.0002055	1.18E-08	AP-42, Table 1.4-4
Cadmium	3.98E-04	AP-42. Table 1.3-11	50%	1.99E-04	4.11E-04	AP-42, Table 1.3-10 and assuming 0.137 MMBTU/gal	50%	0.0002055	1.08E-06	AP-42, Table 1.4-4
Chloride (assume as HCl)	3.47E-01	AP-42. Table 1.3-11	75%	8.68E-02						
Chromium	8.45E-04	AP-42. Table 1.3-11	50%	4.23E-04	4.11E-04	AP-42, Table 1.3-10 and assuming 0.137 MMBTU/gal	50%	0.0002055	1.37E-06	AP-42, Table 1.4-4
Chromium (VI)	2.48E-04	AP-42. Table 1.3-11	50%	1.24E-04	2.06E-05	AB 2588 Guidance. Cr(VI) 5% of Cr total.	50%	0.000010275	6.86E-08	AP-42, Table 1.4-4
Cobalt	6.02E-03	AP-42. Table 1.3-11	50%	3.01E-03					8.24E-08	AP-42, Table 1.4-4
Lead	1.51E-03	AP-42. Table 1.3-11	50%	7.55E-04						
Manganese	3.00E-03	AP-42. Table 1.3-11	50%	1.50E-03	8.22E-04	AP-42, Table 1.3-10 and assuming 0.137 MMBTU/gal	50%	0.000411	3.73E-07	AP-42, Table 1.4-4

Table 3-2
Hazardous Air Pollutant Emission Factors for Plant Fuels

Air Pollutant	Emission Factor									
	#6 Oil, lb/1000 gal				#2 Oil, lb/1000 gal				Natural Gas, lb/MMBTU	
	Uncontrolled	Reference	Control Efficiency (Wet Scrubber)	Controlled	Uncontrolled	Reference	Control Efficiency (Wet Scrubber)	Controlled	Uncontrolled (based on 1020 BTU/scf)	Reference
Mercury	1.13E-04	AP-42. Table 1.3-11		1.13E-04	4.11E-04	AP-42, Table 1.3-10 and assuming 0.137 MMBTU/gal		0.000411	2.55E-07	AP-42, Table 1.4-4
Nickel	8.45E-02	AP-42. Table 1.3-11	50%	4.23E-02	4.11E-04	AP-42, Table 1.3-10 and assuming 0.137 MMBTU/gal	50%	0.0002055	2.06E-06	AP-42, Table 1.4-4
Selenium	6.83E-04	AP-42. Table 1.3-11	50%	3.42E-04	2.06E-03	AP-42, Table 1.3-10 and assuming 0.137 MMBTU/gal	50%	0.0010275	2.35E-08	AP-42, Table 1.4-4
Total HAP Emission				1.89E-01				5.43E-02	1.85E-03	

Table 3-3
Estimated Potential Plantwide HAP Emissions

Combustion Process		Maximum fring rate		Duration of firing, days		Maximum Amount of Fuel Combusted		Total HAP Emission Factor		Potential Total HAP Emiisions, tons/yr
Boilers - Maximum #6 oil Firng of Boilers	Boilers 1 and 2 combined - #6 oil firing	15,384	gal/day	266.4	days	4,097,682	gallons	1.89E-01	lb/1000 gal	0.39
	Boiler 1 - #2 Oil firing	9360	gal/day	98.6	days	923,271	gallons	5.43E-02	lb/1000 gal	0.03
	Boiler 2 - #2 Oil firing	12312	gal/day	98.6	days	1,214,456	gallons	5.43E-02	lb/1000 gal	0.03
	Boiler 3 - #2 oill firing	6552	gal/day	60	days	393,120	gallons	5.43E-02	lb/1000 gal	0.01
	Boiler 3 - gas firing	39	MMBtu/hr	38.6	days	36,167	MMBtu	1.85E-03	lb/MMBtu	0.03
							Total for Maximum #6 oil Firng Condition			0.49
Boikers - Maximum #2 oil Firng Condition.	Boiler 1 - #2 Oil firing	9360	gal/day	365	days	3,416,400	gallons	5.43E-02	lb/1000 gal	0.09
	Boiler 2 - #2 Oil firing	12312	gal/day	365	days	4,493,880	gallons	5.43E-02	lb/1000 gal	0.12
	Boiler 3- #2 oill firing	6552	gal/day	60	days	393,120	gallons	5.43E-02	lb/1000 gal	0.01
	Boiler 3 - gas firing	39	MMBtu/hr	305	days	285,480	MMBtu	1.85E-03	lb/MMBtu	0.26
							Total for Maximum #2 oil Firng Condition			0.49
Boilers - Maximum natural gas firing	Boiler 1 - gas firing	55.2	MMBtu/hr	365	days	483,552	MMBtu	1.85E-03	lb/MMBtu	0.45
	Boiler 2 - gas firing	73.5	MMBtu/hr	365	days	643,860	MMBtu	1.85E-03	lb/MMBtu	0.59
	Boiler 3 - gas firing	39	MMBtu/hr	365	days	341,640	MMBtu	1.85E-03	lb/MMBtu	0.32
							Total for Maximum natural gas firing			1.36
							Maximum Potential HAP Emissions from Boilers:			1.36
Process Burners		161.9	MMBtu/hr	365	days	1,417,806	MMBtu	1.85E-03	lb/MMBtu	1.31
Space Heaters		77.6	MMBtu/hr	182.5	days	339,781	MMBtu	1.85E-03	lb/MMBtu	0.31
								Total Potental HAP Emissions		2.98

FIGURES

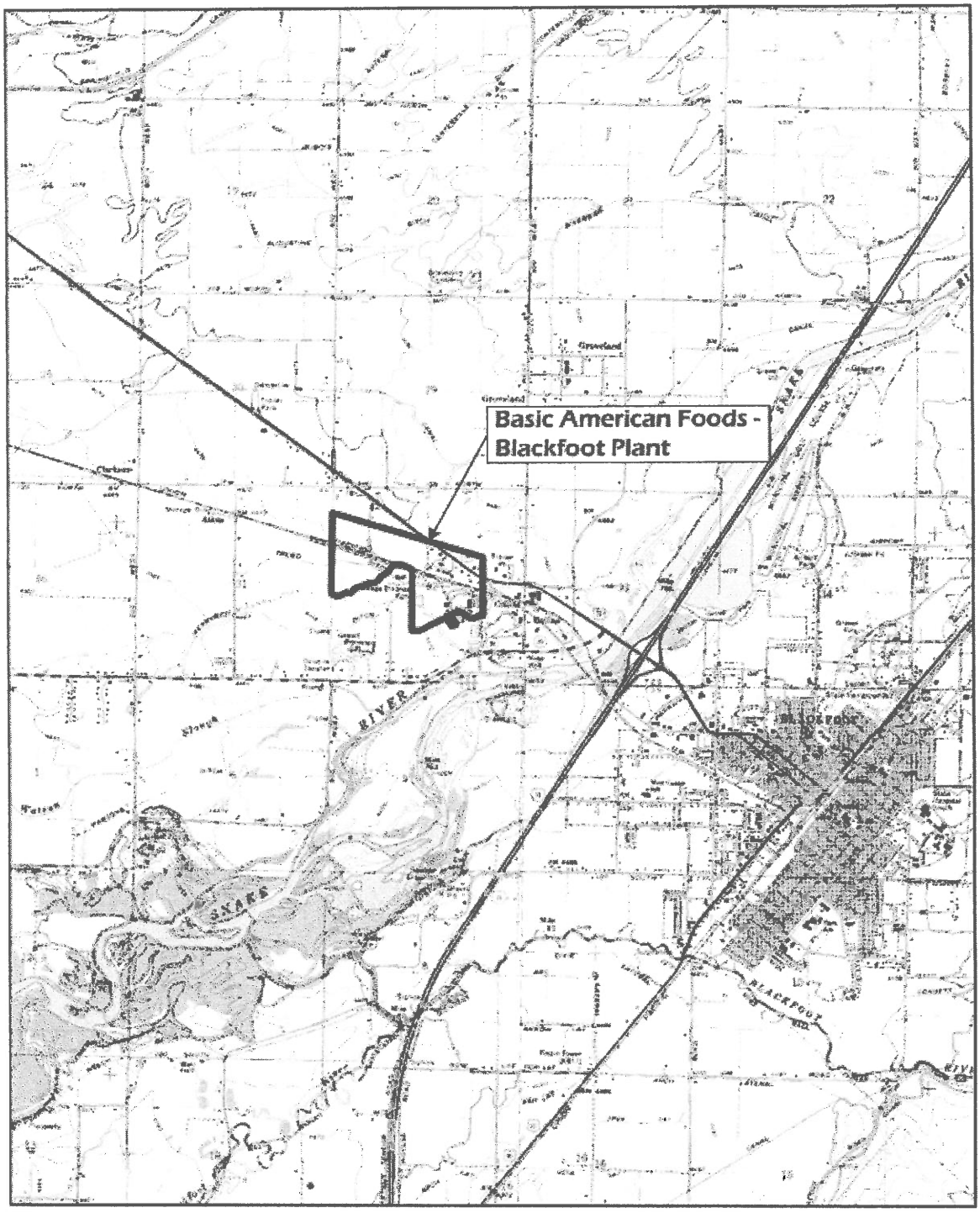

FIGURE 2-1
SITE MAP

APPLICATION FOR TIER II AIR OPERATING PERMIT - BLACKFOOT FACILITY OF BASIC AMERICAN FOODS

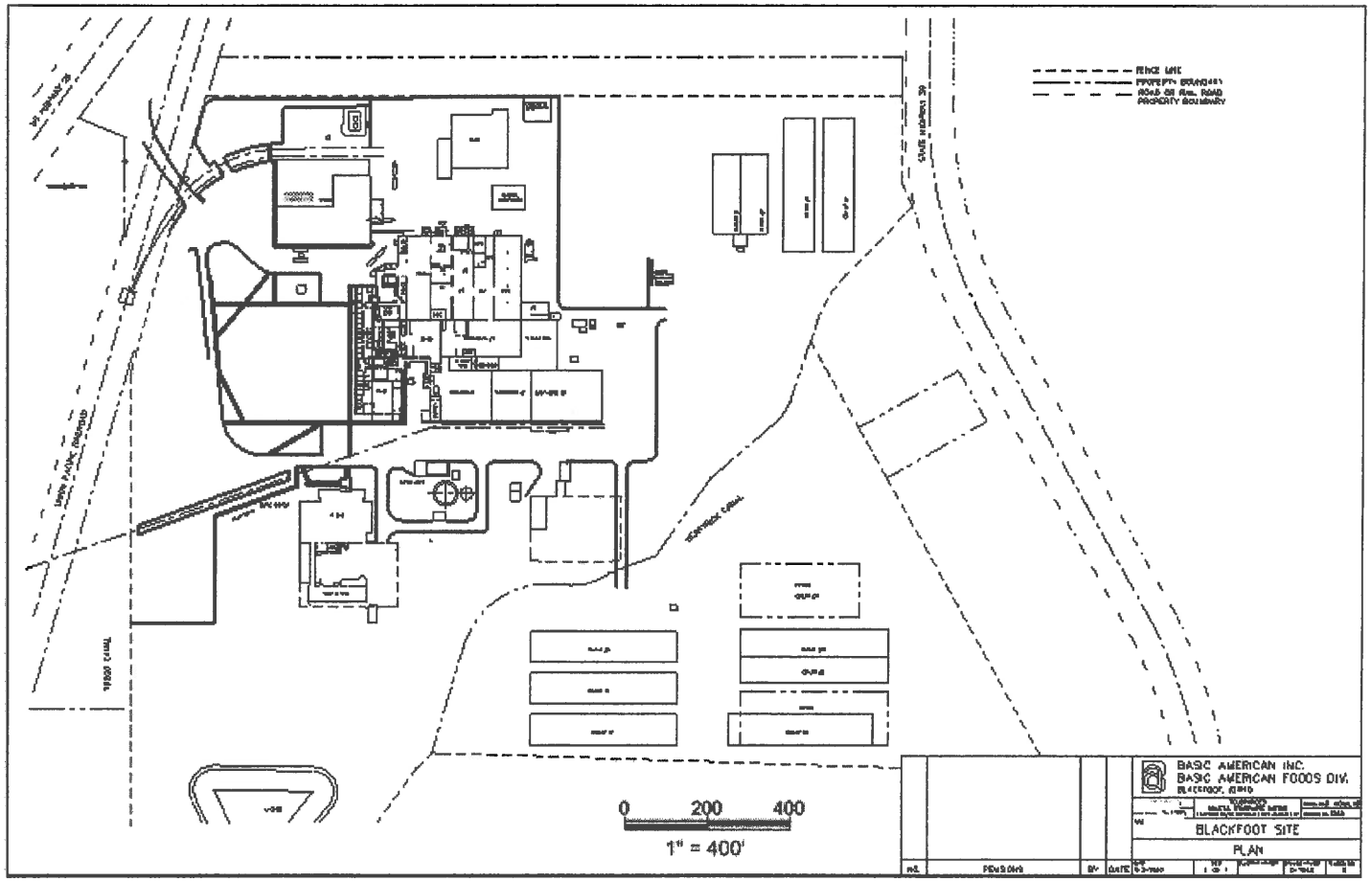

FIGURE 2-2
BLACKFOOT PLANT SITE PLAN

APPLICATION FOR TIER II AIR OPERATING PERMIT - BLACKFOOT FACILITY OF BASIC AMERICAN FOODS

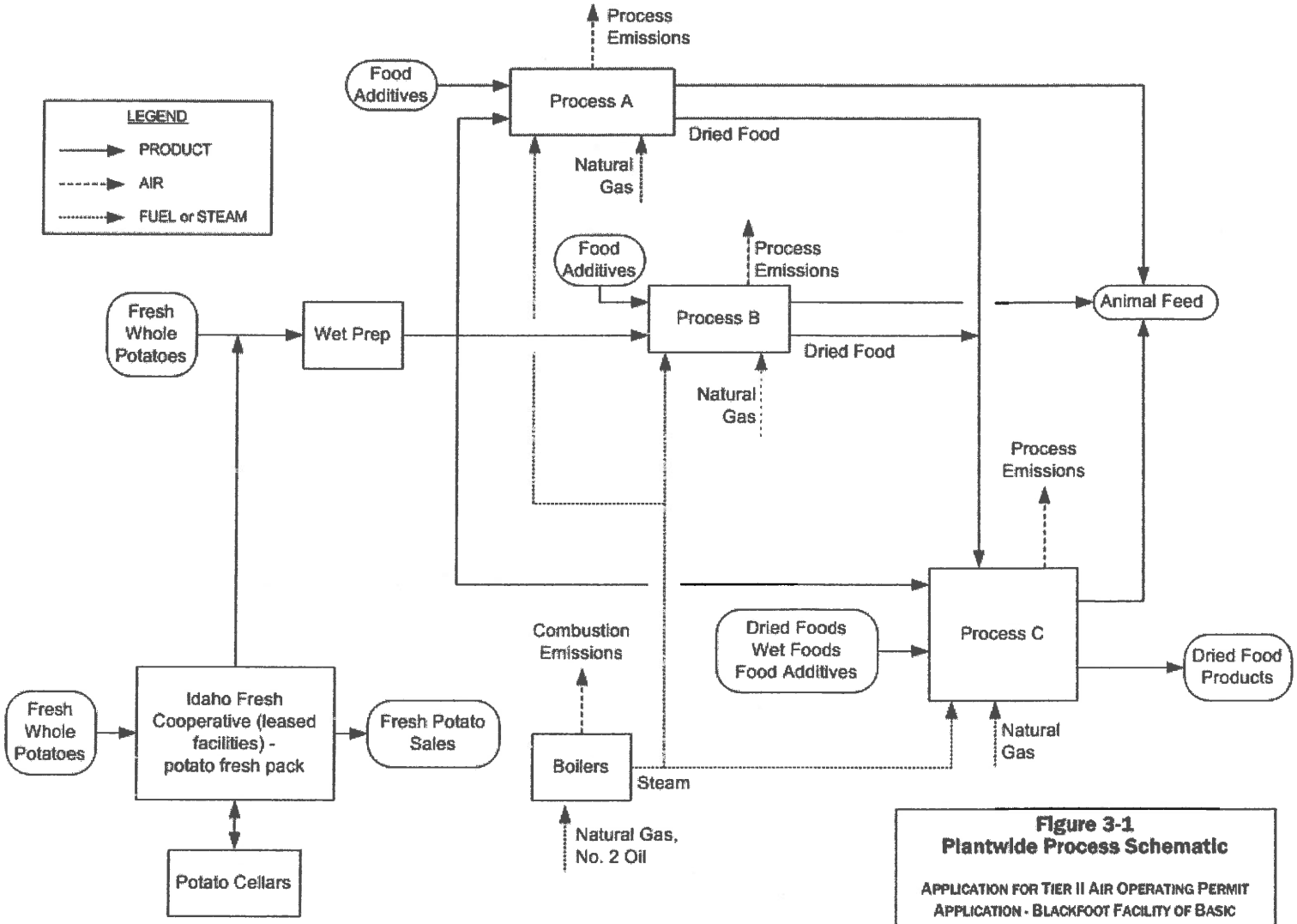

Figure 3-1
Plantwide Process Schematic

APPLICATION FOR TIER II AIR OPERATING PERMIT APPLICATION - BLACKFOOT FACILITY OF BASIC AMERICAN FOODS

Coal Creek Environmental Associates, LLC
Project 120101.33 May 2012

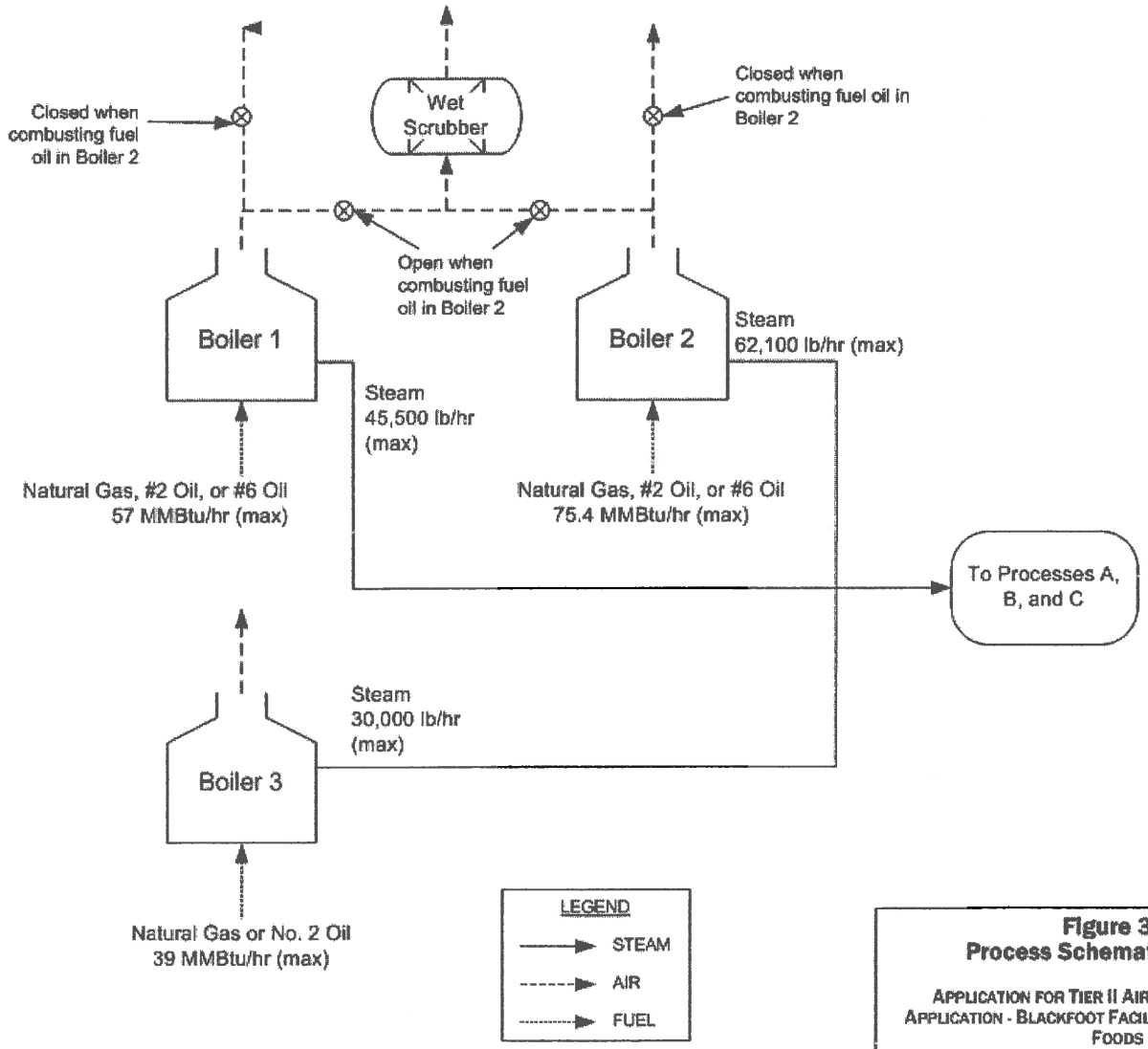

Figure 3-2
Process Schematic - Boilers

APPLICATION FOR TIER II AIR OPERATING PERMIT APPLICATION - BLACKFOOT FACILITY OF BASIC AMERICAN FOODS

Coal Creek Environmental Associates, LLC
Project 120101.33 May 2012

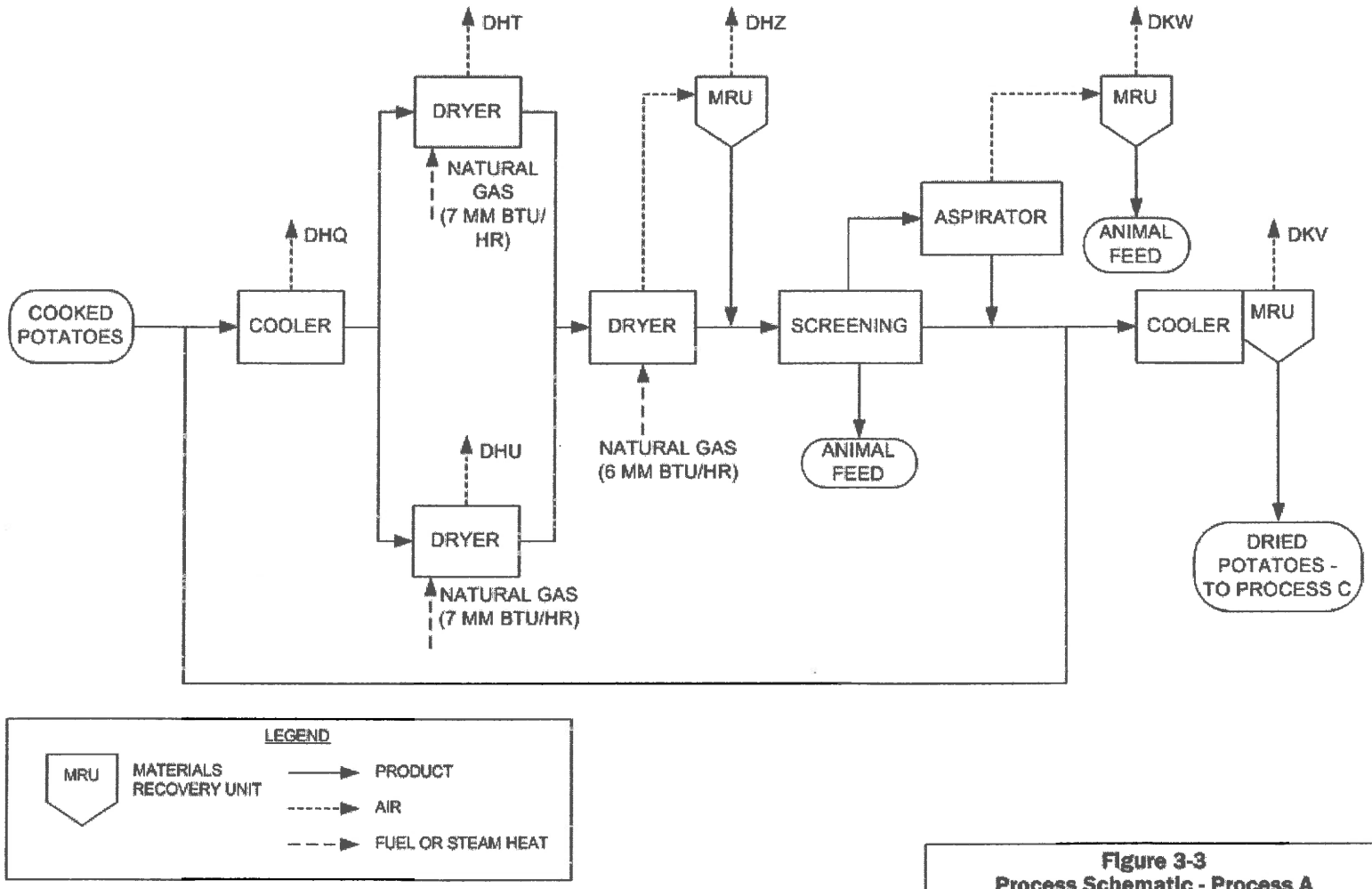

Figure 3-3
Process Schematic - Process A

APPLICATION FOR TIER II AIR OPERATING PERMIT APPLICATION - BLACKFOOT FACILITY OF BASIC AMERICAN FOODS

Coal Creek Environmental Associates, LLC
Project 120101.31 May 2012

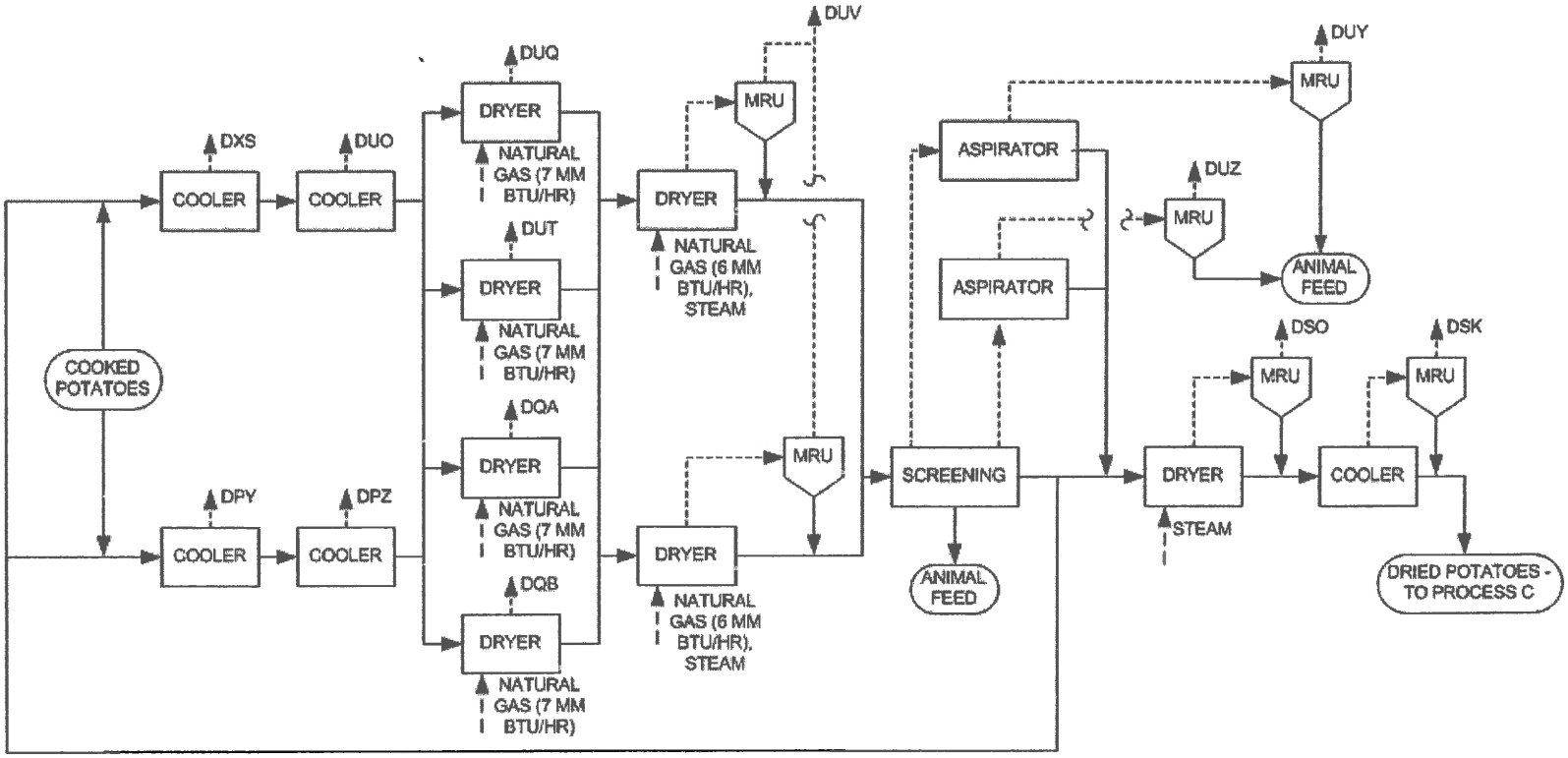

NOTE: STACKS DUU AND DRY (NOT SHOWN) ARE EXHAUSTS FROM MRU'S THAT SERVE DUST PICK-UPS ASSOCIATED WITH MATERIALS TRANSPORT EQUIPMENT INTERNAL TO PROCESSES P1 AND P2/3.

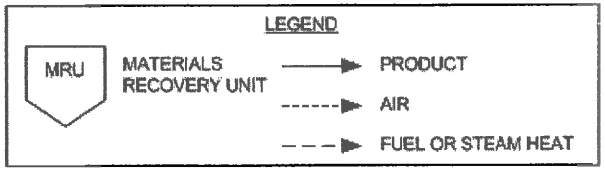

Figure 3-4
Process Schematic - Process B

APPLICATION FOR TIER II AIR OPERATING PERMIT APPLICATION - BLACKFOOT FACILITY OF BASIC AMERICAN FOODS

Coal Creek Environmental Associates, LLC
Project 120101.33 May 2012

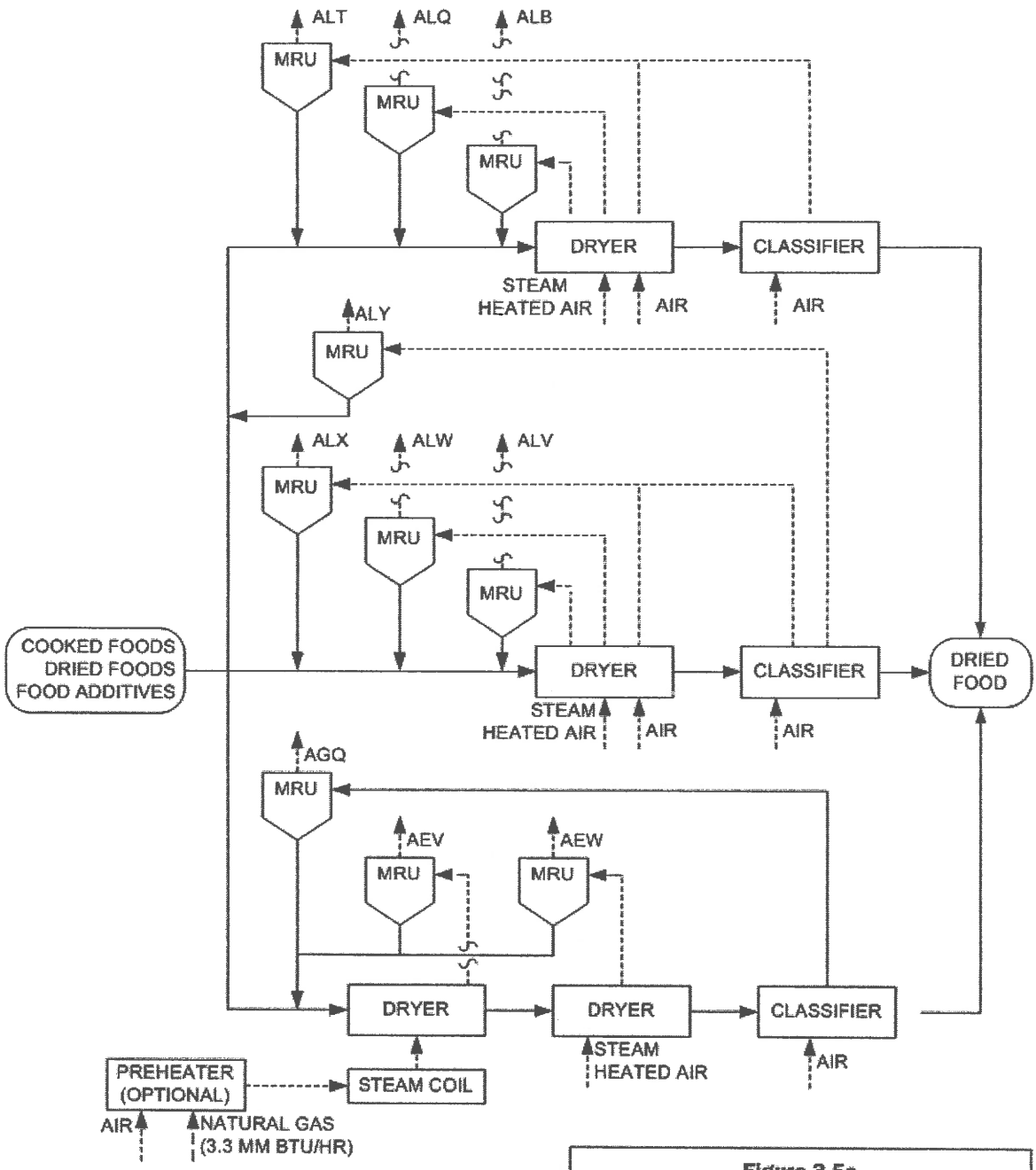

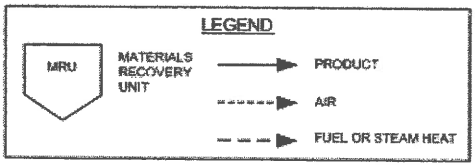

Figure 3-5a
Process Schematic - Process C
Part 1

APPLICATION FOR TIER II AIR OPERATING PERMIT APPLICATION - BLACKFOOT FACILITY OF BASIC AMERICAN FOODS

Coal Creek Environmental Associates, LLC
Project 120101.33 May 2012

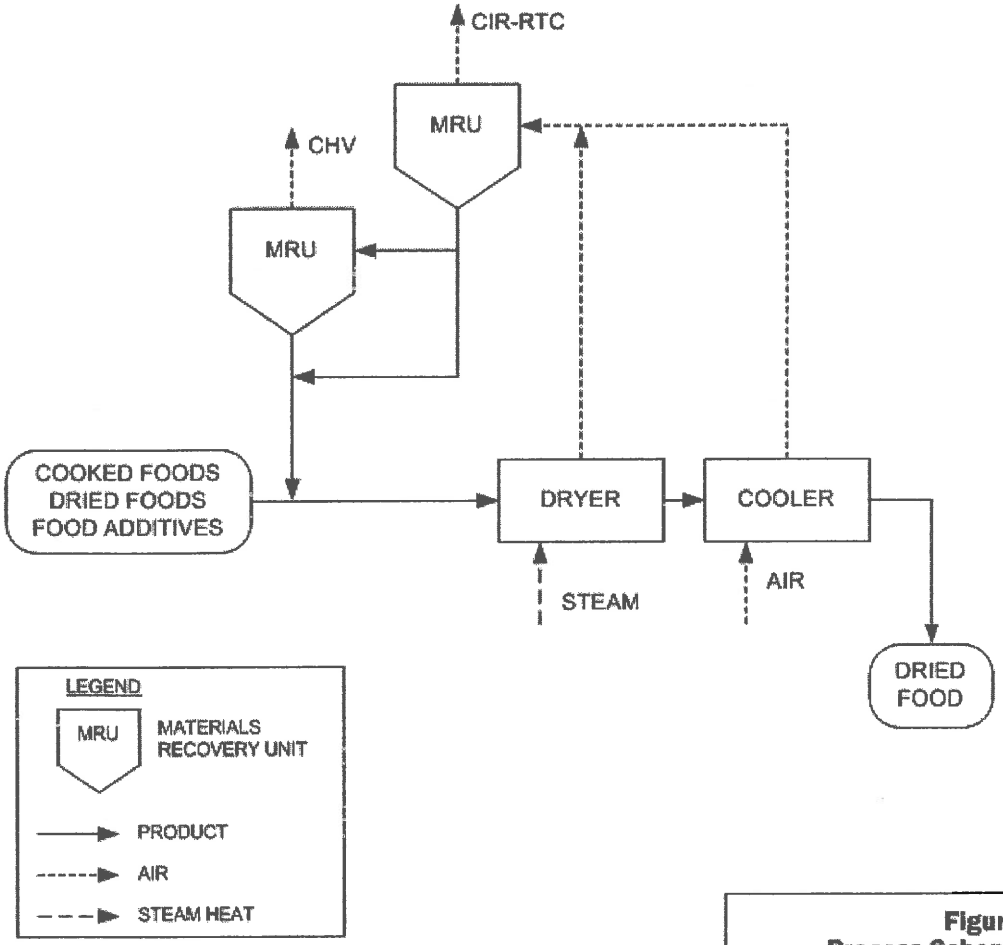

Figure 3-5b
Process Schematic - Process C
Part 2

APPLICATION FOR TIER II AIR OPERATING PERMIT APPLICATION - BLACKFOOT FACILITY OF BASIC AMERICAN FOODS

Coal Creek Environmental Associates, LLC
Project 120101.33 May 2012

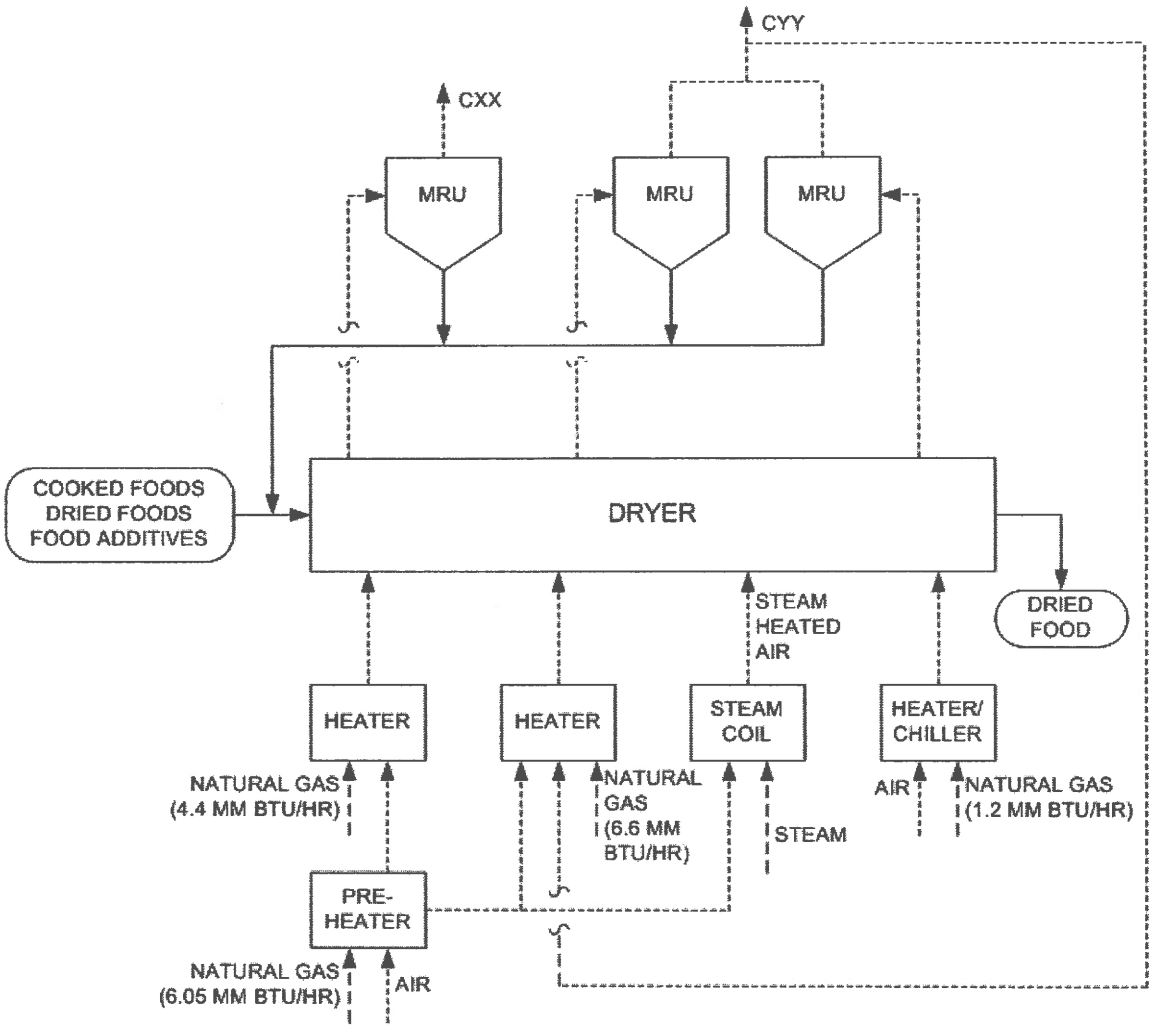

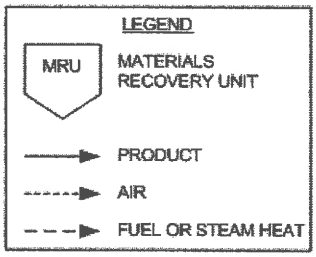

Figure 3-5c
Process Schematic - Process C
Part 3

APPLICATION FOR TIER II AIR OPERATING PERMIT APPLICATION - BLACKFOOT FACILITY OF BASIC AMERICAN FOODS

Coal Creek Environmental Associates, LLC
Project 120101.33 May 2012

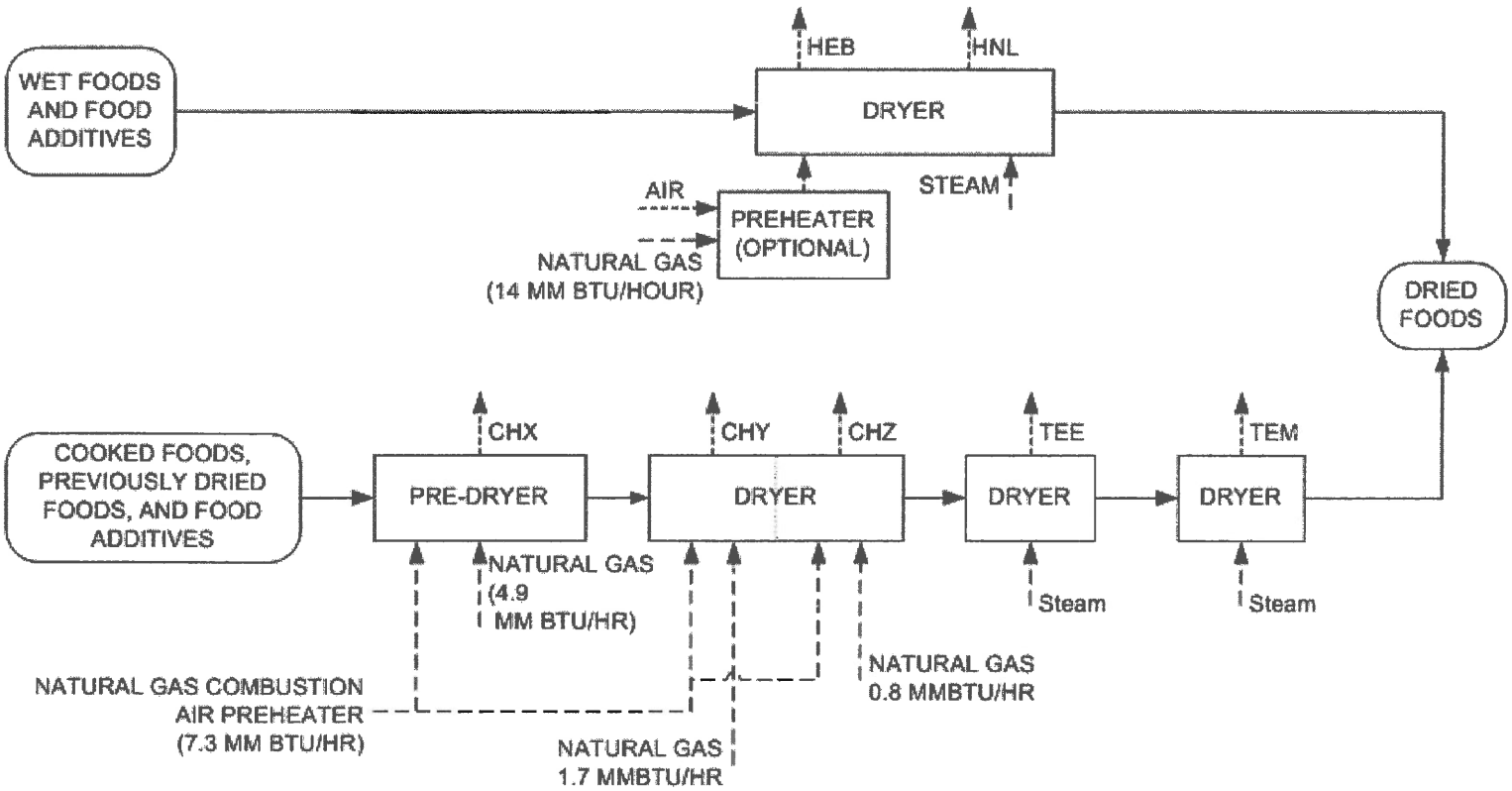

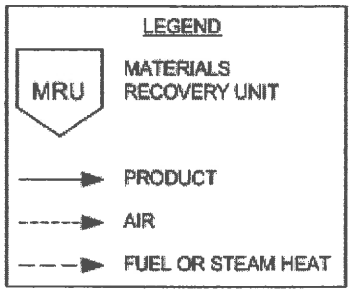

Figure 3-5d
Process Schematic - Process C
Part 4

APPLICATION FOR TIER II AIR OPERATING PERMIT APPLICATION - BLACKFOOT FACILITY OF BASIC AMERICAN FOODS

Coal Creek Environmental Associates, LLC
Project 120101.33 May 2012

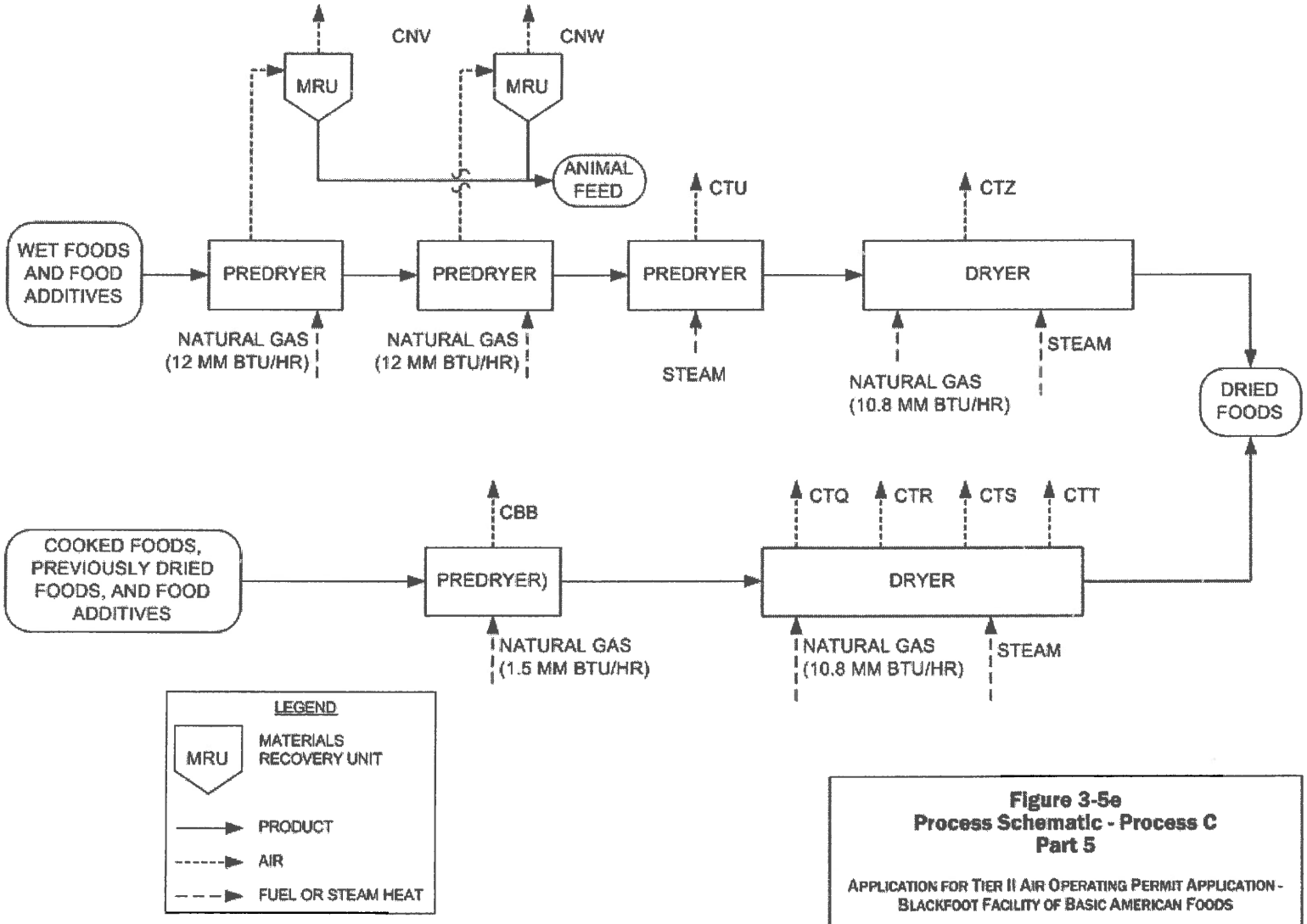

Figure 3-5e
Process Schematic - Process C
Part 5

APPLICATION FOR TIER II AIR OPERATING PERMIT APPLICATION - BLACKFOOT FACILITY OF BASIC AMERICAN FOODS

Coal Creek Environmental Associates, LLC
Project 120101.33 May 2012

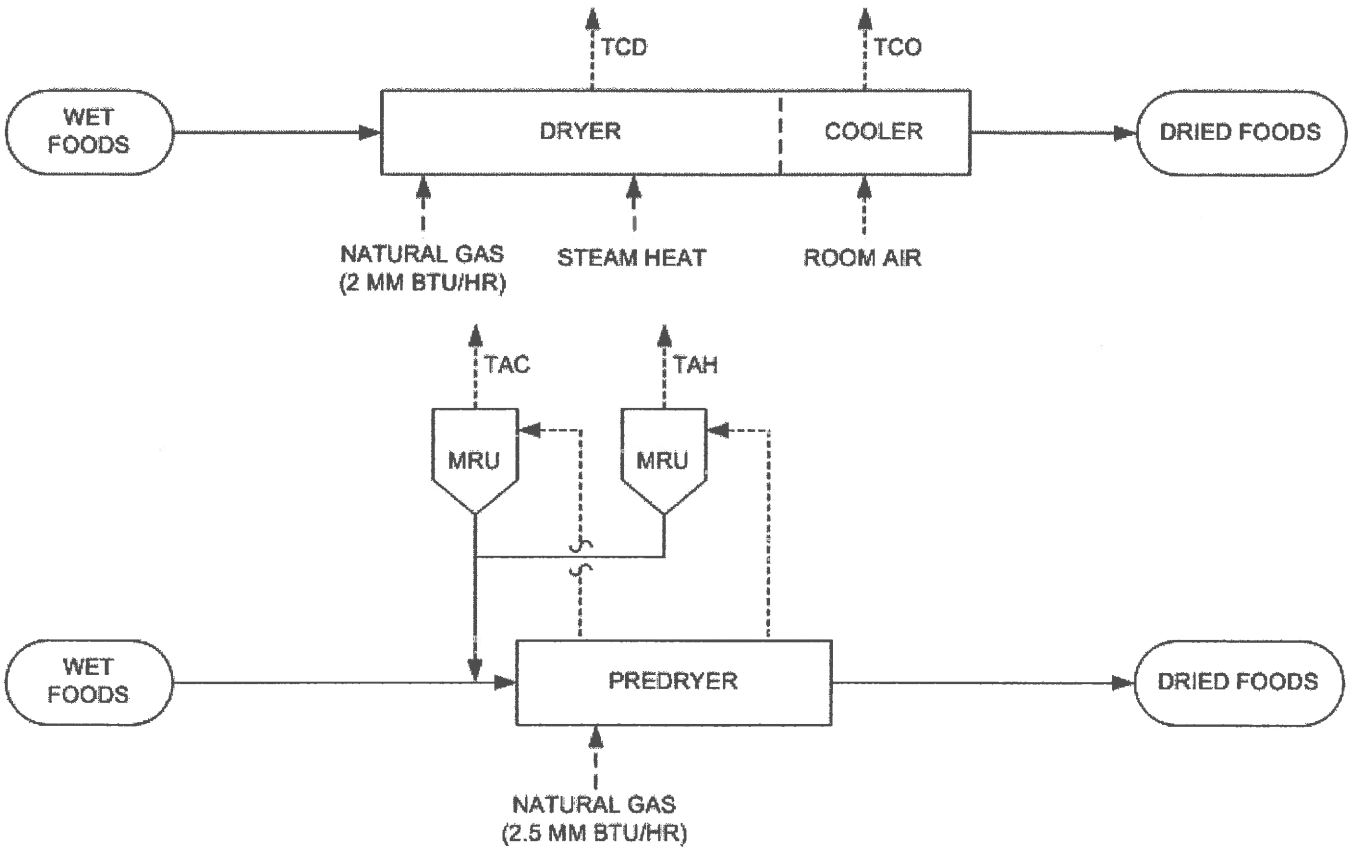

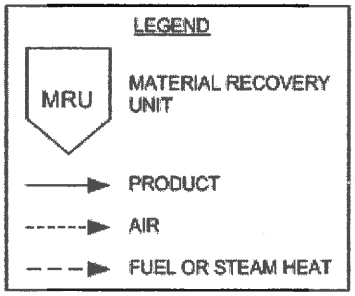

Figure 3-5f
Process Schematic - Process C
Part 6

APPLICATION FOR TIER II AIR OPERATING PERMIT APPLICATION - BLACKFOOT FACILITY OF BASIC AMERICAN FOODS

Coal Creek Environmental Associates, LLC
Project 120101.33 May 2012

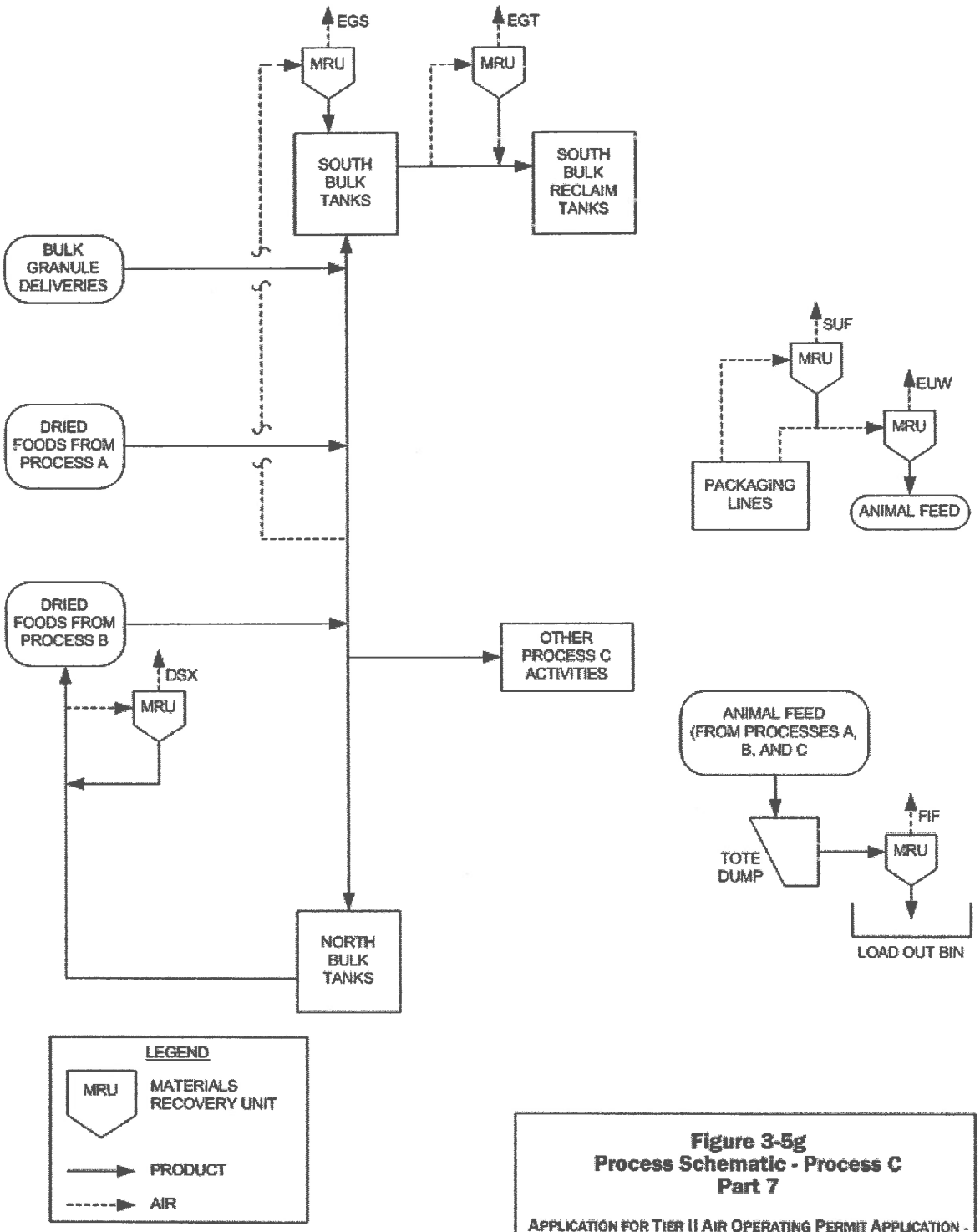

Figure 3-5g
Process Schematic - Process C
Part 7

APPLICATION FOR TIER II AIR OPERATING PERMIT APPLICATION - BLACKFOOT FACILITY OF BASIC AMERICAN FOODS

Coal Creek Environmental Associates, LLC
Project 120101.33 May 2012

APPENDIX A

TIER I PERMIT APPLICATION COVER SHEET AND GENERAL INFORMATION FORM GI

DEQ AIR QUALITY PROGRAM
1410 N. Hilton, Boise, ID 83706
For assistance, call the
Air Permit Hotline – 1-877-5PERMIT

Cover Sheet for Air Permit Application – Tier I **Form CSTI**
Revision 5
08/28/08

Please see instructions on page 2 before filling out the form.

COMPANY NAME, FACILITY NAME, AND FACILITY ID NUMBER

1. Company Name	Basic American Foods, a Division of Basic American, Inc.		
2. Facility Name	Blackfoot Facility	3. Facility ID No.	011 00012
4. Brief Project Description - One sentence or less	Tier Permit Renewal		

PERMIT APPLICATION TYPE

5. ☐ Initial Tier I ☐ Tier I Administrative Amendment ☐ Tier I Minor Modification ☐ Tier I Significant Modification
☒ Tier I Renewal: Permit No.: T1-060315 Date Issued: November 20, 2007

FORMS INCLUDED

Included	N/A	Forms		DEQ Verify
☒	☐	Form CSTI – Cover Sheet		☐
☒	☐	Form GI – Facility Information		☐
☒	☐	Form EU0 – Emissions Units General		☐
☐	☒	Form EU1– Industrial Engine Information	Please specify number of EU1s attached: _____	☐
☐	☒	Form EU2– Nonmetallic Mineral Processing Plants	Please specify number of EU2s attached: _____	☐
☐	☒	Form EU3– Spray Paint Booth Information	Please specify number of EU3s attached: _____	☐
☐	☒	Form EU4– Cooling Tower Information	Please specify number of EU4s attached: _____	☐
☒	☐	Form EU5 – Boiler Information	Please specify number of EU5s attached: 3	☐
☐	☒	Form CBP– Concrete Batch Plant	Please Specify number of CBPs attached: _____	☐
☐	☒	Form HMAP – Hot Mix Asphalt Plant	Please specify number of HMAPs attached:	☐
☐	☒	PERF – Portable Equipment Relocation Form		☐
☐	☒	Form BCE– Baghouses Control Equipment		☐
☒	☐	Form SCE– Scrubbers Control Equipment		☐
☒	☐	Form VSCE – Venturi Scrubber Control Equipment		☐
☐	☒	Form ESP – Electrostatic Precipitator		☐
☐	☒	Form AO – Afterburner/Oxidizer		☐
☐	☒	Form CYS – Cyclone Separator		☐
☐	☒	Form CA – Carbon Adsorber		☐
☒	☐	Forms EI-CP1 - EI-CP4– Emissions Inventory– criteria pollutants	(Excel workbook, all 4 worksheets)	☐
☐	☒	Form CAM – Compliance Assurance Monitoring		☐
☒	☐	Form FRA – Federal Regulation Applicability		☐

DEQ AIR QUALITY PROGRAM
1410 N. Hilton, Boise, ID 83706
For assistance, call the
Air Permit Hotline – 1-877-5PERMIT

General Information **Form GI**
Revision 7
2/18/10

Please see instructions on page 2 before filling out the form.

All information is required. If information is missing, the application will not be processed.

IDENTIFICATION

1. Company Name	2. Facility Name:
Basic American Foods, A Division of Basic American, Inc.	Blackfoot Facility

3. Brief Project Description:	Application for Renewal of Tier I Air Operating Permit

FACILITY INFORMATION

4. Primary Facility Permit Contact Person/Title	John Kirkpatrick		Idaho Campus Environmental Manager	
5. Telephone Number and Email Address	208-785-8572		jkirkpatrick@baf.com	
6. Alternate Facility Contact Person/Title	Bruce Wright		Corporate Environmental Manager	
7. Telephone Number and Email Address	208-785-8590		bwright@baf.com	
8. Address to Which the Permit Should be Sent	415 West Collins Road			
9. City/County/State/Zip Code	Blackfoot	Bingham	ID	83221
10. Equipment Location Address (if different than the mailing address above)	NA			
11. City/County/State/Zip Code	NA	NA	NA	NA
12. Is the Equipment Portable?	☐ Yes ☒ No			
13. SIC Code(s) and NAICS Code	Primary SIC: 2034	Secondary SIC: 2034	NAICS: 311423	
14. Brief Business Description and Principal Product	vegetable dehydration			
15. Indentify any adjacent or contiguous facility that this company owns and/or operates	None			
16. Specify the reason for the application	☐ Permit to Construct (PTC) For Tier I permitted facilities only: If you are applying for a PTC then you must also specify how the PTC will be incorporated into the Tier I permit. ☐ Incorporate the PTC at the time of the Tier I renewal ☐ Co-process the Tier I modification and PTC ☐ Administratively amend the Tier I permit to incorporate the PTC upon your request (IDAPA 58.01.01.209.05.a, b, or c) ☒ Tier I Permit ☐ Tier II Permit ☐ Tier II/Permit to Construct			

CERTIFICATION

In accordance with IDAPA 58.01.01.123 (Rules for the Control of Air Pollution in Idaho), I certify based on information and belief formed after reasonable inquiry, the statements and information in the document(s) are true, accurate, and complete.

17. Responsible Official's Name/Title	Brent Higginson	Facility Manager	
18. Responsible Official Address	415 West Collins Road		
19. Responsible Official Telephone Number	208 785-8320		
20. Responsible Official Email Address	bhigginson@baf.com		
21. Responsible Official's Signature	[signature]	Date:	5/16/12

22. ☒ Check here to indicate that you would like to review the draft permit prior to final issuance.

APPENDIX B

DEQ EQUIPMENT DATA FORMS

DEQ AIR QUALITY PROGRAM
1410 N. Hilton, Boise, ID 83706
For assistance, call the
Air Permit Hotline – 1-877-5PERMIT

Emissions Unit - General **Form EU0**
Revision 4
08/28/08

Please see instructions on page 2 before filling out the form.

IDENTIFICATION

1. Company Name:	2. Facility Name:	3. Facility ID No:
Basic American Foods	BAF	011 00012

4. Brief Project Description: Tier I Permit Renewal

EMISSIONS UNIT (PROCESS) IDENTIFICATION & DESCRIPTION

5.	Emissions Unit (EU) Name:	BOILER 1
6.	EU ID Number:	BOILER 1
7.	EU Type:	☐ New Source ☐ Unpermitted Existing Source ☐ Modification to a Permitted Source -- Previous Permit #: Date Issued:
8.	Manufacturer:	MURRAY
9.	Model:	NA
10..	Maximum Capacity:	55 MMBTU/HR
11.	Date of Construction:	1982
12.	Date of Modification (if any):	2004
13.	Is this a Controlled Emission Unit?	☐ No ☒ Yes If Yes, complete the following section. If No, go to line 22.

EMISSIONS CONTROL EQUIPMENT

14. Control Equipment Name and ID:	Boiler 1-2 Scrubber
15. Date of Installation:	2004 16. Date of Modification (if any):
17. Manufacturer and Model Number:	Carbo-Tech Environmental Group; Model No. 48x48-96HE
18. ID(s) of Emission Unit Controlled:	Boiler 1; Boiler 2
19. Is operating schedule different than emission units(s) involved?	☒ Yes ☐ No
20. Does the manufacturer guarantee the control efficiency of the control equipment?	☒ Yes ☐ No (If Yes, attach and label manufacturer guarantee)

	Pollutant Controlled					
	PM	PM10	SO_2	NOx	VOC	CO
Control Efficiency	50	50	75	0	0	0

21. If manufacturer's data is not available, attach a separate sheet of paper to provide the control equipment design specifications and performance data to support the above mentioned control efficiency.

EMISSION UNIT OPERATING SCHEDULE (hours/day, hours/year, or other)

22.	Actual Operation:	VARIES - SCRUBBER USED WHEN COMBUSTING OIL
23.	Maximum Operation:	8760 HR/YR

REQUESTED LIMITS

24. Are you requesting any permit limits? ☐ Yes ☒ No (If Yes, indicate all that apply below)

- ☐ Operation Hour Limit(s):
- ☐ Production Limit(s):
- ☐ Material Usage Limit(s):
- ☐ Limits Based on Stack Testing: Please attach all relevant stack testing summary reports
- ☐ Other:

25. Rationale for Requesting the Limit(s):

DEQ AIR QUALITY PROGRAM
1410 N. Hilton, Boise, ID 83706
For assistance, call the
Air Permit Hotline – 1-877-5PERMIT

Emissions Unit - General **Form EU0**
Revision 4
08/28/08

Please see instructions on page 2 before filling out the form.

IDENTIFICATION

1. Company Name:	2. Facility Name:	3. Facility ID No:
Basic American Foods	BAF	011 00012

4. Brief Project Description: Tier I Permit Renewal

EMISSIONS UNIT (PROCESS) IDENTIFICATION & DESCRIPTION

5.	Emissions Unit (EU) Name:	BOILER 2
6.	EU ID Number:	BOILER 2
7.	EU Type:	☐ New Source ☐ Unpermitted Existing Source ☐ Modification to a Permitted Source -- Previous Permit #: Date Issued:
8.	Manufacturer:	JOHNSTON
9.	Model:	509
10..	Maximum Capacity:	75.4 MMBTU/HR
11.	Date of Construction:	1994
12.	Date of Modification (if any):	2004
13.	Is this a Controlled Emission Unit?	☐ No ☒ Yes If Yes, complete the following section. If No, go to line 22.

EMISSIONS CONTROL EQUIPMENT

14. Control Equipment Name and ID:	Boiler 1-2 Scrubber
15. Date of Installation:	2004 16. Date of Modification (if any):
17. Manufacturer and Model Number:	Carbo-Tech Environmental Group; Model No. 48x48-96HE
18. ID(s) of Emission Unit Controlled:	Boiler 1; Boiler 2
19. Is operating schedule different than emission units(s) involved?	☒ Yes ☐ No
20. Does the manufacturer guarantee the control efficiency of the control equipment?	☒ Yes ☐ No (If Yes, attach and label manufacturer guarantee)

	Pollutant Controlled					
	PM	PM10	SO_2	NOx	VOC	CO
Control Efficiency	50	50	75	0	0	0

21. If manufacturer's data is not available, attach a separate sheet of paper to provide the control equipment design specifications and performance data to support the above mentioned control efficiency.

EMISSION UNIT OPERATING SCHEDULE (hours/day, hours/year, or other)

22.	Actual Operation:	VARIES - SCRUBBER USED WHEN COMBUSTING OIL
23.	Maximum Operation:	8760 HR/YR

REQUESTED LIMITS

24. Are you requesting any permit limits? ☐ Yes ☒ No (If Yes, indicate all that apply below)

- ☐ Operation Hour Limit(s):
- ☐ Production Limit(s):
- ☐ Material Usage Limit(s):
- ☐ Limits Based on Stack Testing: Please attach all relevant stack testing summary reports
- ☐ Other:

25. Rationale for Requesting the Limit(s):

DEQ AIR QUALITY PROGRAM
1410 N. Hilton, Boise, ID 83706
For assistance, call the
Air Permit Hotline – 1-877-5PERMIT

Emissions Unit - General **Form EU0**
Revision 4
08/28/08

Please see instructions on page 2 before filling out the form.

IDENTIFICATION

1. Company Name:	2. Facility Name:	3. Facility ID No:
Basic American Foods	BAF	011 00012

4. Brief Project Description: Tier I Permit Renewal

EMISSIONS UNIT (PROCESS) IDENTIFICATION & DESCRIPTION

5.	Emissions Unit (EU) Name:	BOILER 3
6.	EU ID Number:	BOILER 3
7.	EU Type:	☐ New Source ☐ Unpermitted Existing Source ☐ Modification to a Permitted Source -- Previous Permit #: Date Issued:
8.	Manufacturer:	SPRINGFIELD
9.	Model:	52
10..	Maximum Capacity:	39 MMBTU/HR
11.	Date of Construction:	1975
12.	Date of Modification (if any):	1994
13.	Is this a Controlled Emission Unit?	☒ No ☐ Yes If Yes, complete the following section. If No, go to line 22.

EMISSIONS CONTROL EQUIPMENT

14. Control Equipment Name and ID:

15. Date of Installation: 16. Date of Modification (if any):

17. Manufacturer and Model Number:

18. ID(s) of Emission Unit Controlled:

19. Is operating schedule different than emission units(s) involved? ☐ Yes ☐ No

20. Does the manufacturer guarantee the control efficiency of the control equipment? ☐ Yes ☐ No (If Yes, attach and label manufacturer guarantee)

	Pollutant Controlled					
	PM	PM10	SO_2	NOx	VOC	CO
Control Efficiency						

21. If manufacturer's data is not available, attach a separate sheet of paper to provide the control equipment design specifications and performance data to support the above mentioned control efficiency.

EMISSION UNIT OPERATING SCHEDULE (hours/day, hours/year, or other)

22. Actual Operation:

23. Maximum Operation: 8760 HR/YR

REQUESTED LIMITS

24. Are you requesting any permit limits? ☐ Yes ☒ No (If Yes, indicate all that apply below)

☐ Operation Hour Limit(s):

☐ Production Limit(s):

☐ Material Usage Limit(s):

☐ Limits Based on Stack Testing: Please attach all relevant stack testing summary reports

☐ Other:

25. Rationale for Requesting the Limit(s):

DEQ AIR QUALITY PROGRAM
1410 N. Hilton, Boise, ID 83706
For assistance, call the
Air Permit Hotline – 1-877-5PERMIT

Emissions Unit - General **Form EU0**
Revision 4
08/28/08

Please see instructions on page 2 before filling out the form.

IDENTIFICATION

1. Company Name:	2. Facility Name:	3. Facility ID No:
Basic American Foods	BAF	011 00012

4. Brief Project Description: Tier I Permit Renewal

EMISSIONS UNIT (PROCESS) IDENTIFICATION & DESCRIPTION

5.	Emissions Unit (EU) Name:	DHT
6.	EU ID Number:	DHT
7.	EU Type:	☐ New Source ☐ Unpermitted Existing Source ☐ Modification to a Permitted Source -- Previous Permit #: Date Issued:
8.	Manufacturer:	CUSTOM
9.	Model:	CUSTOM
10..	Maximum Capacity:	16,800 LB/HR
11.	Date of Construction:	EARLY 1960S
12.	Date of Modification (if any):	NA
13.	Is this a Controlled Emission Unit?	☒ No ☐ Yes If Yes, complete the following section. If No, go to line 22.

EMISSIONS CONTROL EQUIPMENT

14. Control Equipment Name and ID:

15. Date of Installation: 16. Date of Modification (if any):

17. Manufacturer and Model Number:

18. ID(s) of Emission Unit Controlled:

19. Is operating schedule different than emission units(s) involved? ☐ Yes ☐ No

20. Does the manufacturer guarantee the control efficiency of the control equipment? ☐ Yes ☐ No (If Yes, attach and label manufacturer guarantee)

	Pollutant Controlled					
	PM	PM10	SO_2	NOx	VOC	CO
Control Efficiency						

21. If manufacturer's data is not available, attach a separate sheet of paper to provide the control equipment design specifications and performance data to support the above mentioned control efficiency.

EMISSION UNIT OPERATING SCHEDULE (hours/day, hours/year, or other)

22.	Actual Operation:	
23.	Maximum Operation:	8760 HR/YR

REQUESTED LIMITS

24. Are you requesting any permit limits? ☐ Yes ☒ No (If Yes, indicate all that apply below)

- ☐ Operation Hour Limit(s):
- ☐ Production Limit(s):
- ☐ Material Usage Limit(s):
- ☐ Limits Based on Stack Testing: Please attach all relevant stack testing summary reports
- ☐ Other:

25. Rationale for Requesting the Limit(s):

DEQ AIR QUALITY PROGRAM
1410 N. Hilton, Boise, ID 83706
For assistance, call the
Air Permit Hotline – 1-877-5PERMIT

Emissions Unit - General **Form EU0**
Revision 4
08/28/08

Please see instructions on page 2 before filling out the form.

IDENTIFICATION

1. Company Name:	2. Facility Name:	3. Facility ID No:
Basic American Foods	BAF	011 00012

4. Brief Project Description: Tier I Permit Renewal

EMISSIONS UNIT (PROCESS) IDENTIFICATION & DESCRIPTION

5.	Emissions Unit (EU) Name:	DHU
6.	EU ID Number:	DHU
7.	EU Type:	☐ New Source ☐ Unpermitted Existing Source ☐ Modification to a Permitted Source -- Previous Permit #: Date Issued:
8.	Manufacturer:	CUSTOM
9.	Model:	CUSTOM
10..	Maximum Capacity:	16,800 LB/HR
11.	Date of Construction:	EARLY 1960S
12.	Date of Modification (if any):	NA
13.	Is this a Controlled Emission Unit?	☒ No ☐ Yes If Yes, complete the following section. If No, go to line 22.

EMISSIONS CONTROL EQUIPMENT

14. Control Equipment Name and ID:

15. Date of Installation: 16. Date of Modification (if any):

17. Manufacturer and Model Number:

18. ID(s) of Emission Unit Controlled:

19. Is operating schedule different than emission units(s) involved? ☐ Yes ☐ No

20. Does the manufacturer guarantee the control efficiency of the control equipment? ☐ Yes ☐ No (If Yes, attach and label manufacturer guarantee)

	Pollutant Controlled					
	PM	PM10	SO_2	NOx	VOC	CO
Control Efficiency						

21. If manufacturer's data is not available, attach a separate sheet of paper to provide the control equipment design specifications and performance data to support the above mentioned control efficiency.

EMISSION UNIT OPERATING SCHEDULE (hours/day, hours/year, or other)

22. Actual Operation:

23. Maximum Operation: 8760 HR/YR

REQUESTED LIMITS

24. Are you requesting any permit limits? ☐ Yes ☒ No (If Yes, indicate all that apply below)

☐ Operation Hour Limit(s):

☐ Production Limit(s):

☐ Material Usage Limit(s):

☐ Limits Based on Stack Testing: Please attach all relevant stack testing summary reports

☐ Other:

25. Rationale for Requesting the Limit(s):

DEQ AIR QUALITY PROGRAM
1410 N. Hilton, Boise, ID 83706
For assistance, call the
Air Permit Hotline – 1-877-5PERMIT

Emissions Unit - General **Form EU0**
Revision 4
08/28/08

Please see instructions on page 2 before filling out the form.

IDENTIFICATION

1. Company Name:	2. Facility Name:	3. Facility ID No:
Basic American Foods	BAF	011 00012

4. Brief Project Description: Tier I Permit Renewal

EMISSIONS UNIT (PROCESS) IDENTIFICATION & DESCRIPTION

5.	Emissions Unit (EU) Name:	DHZ
6.	EU ID Number:	DHZ
7.	EU Type:	☐ New Source ☐ Unpermitted Existing Source ☐ Modification to a Permitted Source – Previous Permit #: Date Issued:
8.	Manufacturer:	CUSTOM
9.	Model:	CUSTOM
10..	Maximum Capacity:	33,600 LB/HR
11.	Date of Construction:	EARLY 1960S
12.	Date of Modification (if any):	NA
13.	Is this a Controlled Emission Unit?	☒ No ☐ Yes If Yes, complete the following section. If No, go to line 22.

EMISSIONS CONTROL EQUIPMENT

14. Control Equipment Name and ID:

15. Date of Installation: 16. Date of Modification (if any):

17. Manufacturer and Model Number:

18. ID(s) of Emission Unit Controlled:

19. Is operating schedule different than emission units(s) involved? ☐ Yes ☐ No

20. Does the manufacturer guarantee the control efficiency of the control equipment? ☐ Yes ☐ No (If Yes, attach and label manufacturer guarantee)

	Pollutant Controlled					
	PM	PM10	SO_2	NOx	VOC	CO
Control Efficiency						

21. If manufacturer's data is not available, attach a separate sheet of paper to provide the control equipment design specifications and performance data to support the above mentioned control efficiency.

EMISSION UNIT OPERATING SCHEDULE (hours/day, hours/year, or other)

22. Actual Operation:

23. Maximum Operation: 8760 HR/YR

REQUESTED LIMITS

24. Are you requesting any permit limits? ☐ Yes ☒ No (If Yes, indicate all that apply below)

☐ Operation Hour Limit(s):

☐ Production Limit(s):

☐ Material Usage Limit(s):

☐ Limits Based on Stack Testing: Please attach all relevant stack testing summary reports

☐ Other:

25. Rationale for Requesting the Limit(s):

DEQ AIR QUALITY PROGRAM
1410 N. Hilton, Boise, ID 83706
For assistance, call the
Air Permit Hotline – 1-877-5PERMIT

Emissions Unit - General **Form EU0**
Revision 4
08/28/08

Please see instructions on page 2 before filling out the form.

IDENTIFICATION

1. Company Name:	2. Facility Name:	3. Facility ID No:
Basic American Foods	BAF	011 00012

4. Brief Project Description: Tier I Permit Renewal

EMISSIONS UNIT (PROCESS) IDENTIFICATION & DESCRIPTION

5.	Emissions Unit (EU) Name:	DUQ
6.	EU ID Number:	DUQ
7.	EU Type:	☐ New Source ☐ Unpermitted Existing Source ☐ Modification to a Permitted Source -- Previous Permit #: Date Issued:
8.	Manufacturer:	CUSTOM
9.	Model:	CUSTOM
10..	Maximum Capacity:	16,800 LB/HR
11.	Date of Construction:	EARLY 1960S
12.	Date of Modification (if any):	NA
13.	Is this a Controlled Emission Unit?	☒ No ☐ Yes If Yes, complete the following section. If No, go to line 22.

EMISSIONS CONTROL EQUIPMENT

14. Control Equipment Name and ID:

15. Date of Installation: 16. Date of Modification (if any):

17. Manufacturer and Model Number:

18. ID(s) of Emission Unit Controlled:

19. Is operating schedule different than emission units(s) involved? ☐ Yes ☐ No

20. Does the manufacturer guarantee the control efficiency of the control equipment? ☐ Yes ☐ No (If Yes, attach and label manufacturer guarantee)

	Pollutant Controlled					
	PM	PM10	SO_2	NOx	VOC	CO
Control Efficiency						

21. If manufacturer's data is not available, attach a separate sheet of paper to provide the control equipment design specifications and performance data to support the above mentioned control efficiency.

EMISSION UNIT OPERATING SCHEDULE (hours/day, hours/year, or other)

22. Actual Operation:

23. Maximum Operation: 8760 HR/YR

REQUESTED LIMITS

24. Are you requesting any permit limits? ☐ Yes ☒ No (If Yes, indicate all that apply below)

☐ Operation Hour Limit(s):

☐ Production Limit(s):

☐ Material Usage Limit(s):

☐ Limits Based on Stack Testing: Please attach all relevant stack testing summary reports

☐ Other:

25. Rationale for Requesting the Limit(s):

DEQ AIR QUALITY PROGRAM
1410 N. Hilton, Boise, ID 83706
For assistance, call the
Air Permit Hotline – 1-877-5PERMIT

Emissions Unit - General **Form EU0**
Revision 4
08/28/08

Please see instructions on page 2 before filling out the form.

IDENTIFICATION

1. Company Name:	2. Facility Name:	3. Facility ID No:
Basic American Foods	BAF	011 00012

4. Brief Project Description: Tier I Permit Renewal

EMISSIONS UNIT (PROCESS) IDENTIFICATION & DESCRIPTION

5.	Emissions Unit (EU) Name:	DUT
6.	EU ID Number:	DUT
7.	EU Type:	☐ New Source ☐ Unpermitted Existing Source ☐ Modification to a Permitted Source -- Previous Permit #: Date Issued:
8.	Manufacturer:	CUSTOM
9.	Model:	CUSTOM
10..	Maximum Capacity:	16,800 LB/HR
11.	Date of Construction:	EARLY 1960S
12.	Date of Modification (if any):	NA
13.	Is this a Controlled Emission Unit?	☒ No ☐ Yes If Yes, complete the following section. If No, go to line 22.

EMISSIONS CONTROL EQUIPMENT

14. Control Equipment Name and ID:

15. Date of Installation: 16. Date of Modification (if any):

17. Manufacturer and Model Number:

18. ID(s) of Emission Unit Controlled:

19. Is operating schedule different than emission units(s) involved? ☐ Yes ☐ No

20. Does the manufacturer guarantee the control efficiency of the control equipment? ☐ Yes ☐ No (If Yes, attach and label manufacturer guarantee)

	Pollutant Controlled					
	PM	PM10	SO_2	NOx	VOC	CO
Control Efficiency						

21. If manufacturer's data is not available, attach a separate sheet of paper to provide the control equipment design specifications and performance data to support the above mentioned control efficiency.

EMISSION UNIT OPERATING SCHEDULE (hours/day, hours/year, or other)

22. Actual Operation:

23. Maximum Operation: 8760 HR/YR

REQUESTED LIMITS

24. Are you requesting any permit limits? ☐ Yes ☒ No (If Yes, indicate all that apply below)

☐ Operation Hour Limit(s):

☐ Production Limit(s):

☐ Material Usage Limit(s):

☐ Limits Based on Stack Testing: Please attach all relevant stack testing summary reports

☐ Other:

25. Rationale for Requesting the Limit(s):

DEQ AIR QUALITY PROGRAM
1410 N. Hilton, Boise, ID 83706
For assistance, call the
Air Permit Hotline – 1-877-5PERMIT

Emissions Unit - General **Form EU0**
Revision 4
08/28/08

Please see instructions on page 2 before filling out the form.

IDENTIFICATION

1. Company Name:	2. Facility Name:	3. Facility ID No:
Basic American Foods	BAF	011 00012

4. Brief Project Description: Tier I Permit Renewal

EMISSIONS UNIT (PROCESS) IDENTIFICATION & DESCRIPTION

5.	Emissions Unit (EU) Name:	DQA
6.	EU ID Number:	DQA
7.	EU Type:	☐ New Source ☐ Unpermitted Existing Source ☐ Modification to a Permitted Source -- Previous Permit #: Date Issued:
8.	Manufacturer:	CUSTOM
9.	Model:	CUSTOM
10..	Maximum Capacity:	16,800 LB/HR
11.	Date of Construction:	EARLY 1960S
12.	Date of Modification (if any):	NA
13.	Is this a Controlled Emission Unit?	☒ No ☐ Yes If Yes, complete the following section. If No, go to line 22.

EMISSIONS CONTROL EQUIPMENT

14. Control Equipment Name and ID:

15. Date of Installation: 16. Date of Modification (if any):

17. Manufacturer and Model Number:

18. ID(s) of Emission Unit Controlled:

19. Is operating schedule different than emission units(s) involved? ☐ Yes ☐ No

20. Does the manufacturer guarantee the control efficiency of the control equipment? ☐ Yes ☐ No (If Yes, attach and label manufacturer guarantee)

	Pollutant Controlled					
	PM	PM10	SO_2	NOx	VOC	CO
Control Efficiency						

21. If manufacturer's data is not available, attach a separate sheet of paper to provide the control equipment design specifications and performance data to support the above mentioned control efficiency.

EMISSION UNIT OPERATING SCHEDULE (hours/day, hours/year, or other)

22. Actual Operation:

23. Maximum Operation: 8760 HR/YR

REQUESTED LIMITS

24. Are you requesting any permit limits? ☐ Yes ☒ No (If Yes, indicate all that apply below)

☐ Operation Hour Limit(s):

☐ Production Limit(s):

☐ Material Usage Limit(s):

☐ Limits Based on Stack Testing: Please attach all relevant stack testing summary reports

☐ Other:

25. Rationale for Requesting the Limit(s):

DEQ AIR QUALITY PROGRAM
1410 N. Hilton, Boise, ID 83706
For assistance, call the
Air Permit Hotline – 1-877-5PERMIT

Emissions Unit - General **Form EU0**
Revision 4
08/28/08

Please see instructions on page 2 before filling out the form.

IDENTIFICATION

1. Company Name:	2. Facility Name:	3. Facility ID No:
Basic American Foods	BAF	011 00012

4. Brief Project Description: Tier I Permit Renewal

EMISSIONS UNIT (PROCESS) IDENTIFICATION & DESCRIPTION

5.	Emissions Unit (EU) Name:	DQB
6.	EU ID Number:	DQB
7.	EU Type:	☐ New Source ☐ Unpermitted Existing Source ☐ Modification to a Permitted Source -- Previous Permit #: Date Issued:
8.	Manufacturer:	CUSTOM
9.	Model:	CUSTOM
10..	Maximum Capacity:	16,800 LB/HR
11.	Date of Construction:	EARLY 1960S
12.	Date of Modification (if any):	NA
13.	Is this a Controlled Emission Unit?	☒ No ☐ Yes If Yes, complete the following section. If No, go to line 22.

EMISSIONS CONTROL EQUIPMENT

14. Control Equipment Name and ID:

15. Date of Installation: 16. Date of Modification (if any):

17. Manufacturer and Model Number:

18. ID(s) of Emission Unit Controlled:

19. Is operating schedule different than emission units(s) involved? ☐ Yes ☐ No

20. Does the manufacturer guarantee the control efficiency of the control equipment? ☐ Yes ☐ No (If Yes, attach and label manufacturer guarantee)

	Pollutant Controlled					
	PM	PM10	SO_2	NOx	VOC	CO
Control Efficiency						

21. If manufacturer's data is not available, attach a separate sheet of paper to provide the control equipment design specifications and performance data to support the above mentioned control efficiency.

EMISSION UNIT OPERATING SCHEDULE (hours/day, hours/year, or other)

22. Actual Operation:

23. Maximum Operation: 8760 HR/YR

REQUESTED LIMITS

24. Are you requesting any permit limits? ☐ Yes ☒ No (If Yes, indicate all that apply below)

☐ Operation Hour Limit(s):

☐ Production Limit(s):

☐ Material Usage Limit(s):

☐ Limits Based on Stack Testing: Please attach all relevant stack testing summary reports

☐ Other:

25. Rationale for Requesting the Limit(s):

DEQ AIR QUALITY PROGRAM
1410 N. Hilton, Boise, ID 83706
For assistance, call the
Air Permit Hotline – 1-877-5PERMIT

Emissions Unit - General **Form EU0**
Revision 4
08/28/08

Please see instructions on page 2 before filling out the form.

IDENTIFICATION

1. Company Name:	2. Facility Name:	3. Facility ID No:
Basic American Foods	BAF	011 00012

4. Brief Project Description: Tier I Permit Renewal

EMISSIONS UNIT (PROCESS) IDENTIFICATION & DESCRIPTION

5.	Emissions Unit (EU) Name:	DUV
6.	EU ID Number:	DUV
7.	EU Type:	☐ New Source ☐ Unpermitted Existing Source ☐ Modification to a Permitted Source -- Previous Permit #: Date Issued:
8.	Manufacturer:	CUSTOM
9.	Model:	CUSTOM
10..	Maximum Capacity:	67,200 LB/HR
11.	Date of Construction:	EARLY 1960S
12.	Date of Modification (if any):	NA
13.	Is this a Controlled Emission Unit?	☒ No ☐ Yes If Yes, complete the following section. If No, go to line 22.

EMISSIONS CONTROL EQUIPMENT

14. Control Equipment Name and ID:

15. Date of Installation: 16. Date of Modification (if any):

17. Manufacturer and Model Number:

18. ID(s) of Emission Unit Controlled:

19. Is operating schedule different than emission units(s) involved? ☐ Yes ☐ No

20. Does the manufacturer guarantee the control efficiency of the control equipment? ☐ Yes ☐ No (If Yes, attach and label manufacturer guarantee)

	Pollutant Controlled					
	PM	PM10	SO_2	NOx	VOC	CO
Control Efficiency						

21. If manufacturer's data is not available, attach a separate sheet of paper to provide the control equipment design specifications and performance data to support the above mentioned control efficiency.

EMISSION UNIT OPERATING SCHEDULE (hours/day, hours/year, or other)

22. Actual Operation:

23. Maximum Operation: 8760 HR/YR

REQUESTED LIMITS

24. Are you requesting any permit limits? ☐ Yes ☒ No (If Yes, indicate all that apply below)

☐ Operation Hour Limit(s):

☐ Production Limit(s):

☐ Material Usage Limit(s):

☐ Limits Based on Stack Testing: Please attach all relevant stack testing summary reports

☐ Other:

25. Rationale for Requesting the Limit(s):

DEQ AIR QUALITY PROGRAM
1410 N. Hilton, Boise, ID 83706
For assistance, call the
Air Permit Hotline – 1-877-5PERMIT

Emissions Unit - General **Form EU0**
Revision 4
08/28/08

Please see instructions on page 2 before filling out the form.

IDENTIFICATION

1. Company Name:	2. Facility Name:	3. Facility ID No:
Basic American Foods	BAF	011 00012

4. Brief Project Description: Tier I Permit Renewal

EMISSIONS UNIT (PROCESS) IDENTIFICATION & DESCRIPTION

5.	Emissions Unit (EU) Name:	CIR
6.	EU ID Number:	CIR
7.	EU Type:	☐ New Source ☐ Unpermitted Existing Source ☐ Modification to a Permitted Source -- Previous Permit #: Date Issued:
8.	Manufacturer:	CUSTOM
9.	Model:	CUSTOM
10..	Maximum Capacity:	12,000 LB/HR
11.	Date of Construction:	1966
12.	Date of Modification (if any):	1995
13.	Is this a Controlled Emission Unit?	☒ No ☐ Yes If Yes, complete the following section. If No, go to line 22.

EMISSIONS CONTROL EQUIPMENT

14. Control Equipment Name and ID:	CIR RotoClone
15. Date of Installation:	2011 16. Date of Modification (if any):
17. Manufacturer and Model Number:	RotoClone
18. ID(s) of Emission Unit Controlled:	CIR
19. Is operating schedule different than emission units(s) involved?	☐ Yes ☒ No
20. Does the manufacturer guarantee the control efficiency of the control equipment?	☒ Yes ☐ No (If Yes, attach and label manufacturer guarantee)

	Pollutant Controlled					
	PM	PM10	SO_2	NOx	VOC	CO
Control Efficiency						

21. If manufacturer's data is not available, attach a separate sheet of paper to provide the control equipment design specifications and performance data to support the above mentioned control efficiency.

EMISSION UNIT OPERATING SCHEDULE (hours/day, hours/year, or other)

22.	Actual Operation:	
23.	Maximum Operation:	8760 HR/YR

REQUESTED LIMITS

24. Are you requesting any permit limits? ☐ Yes ☒ No (If Yes, indicate all that apply below)

- ☐ Operation Hour Limit(s):
- ☐ Production Limit(s):
- ☐ Material Usage Limit(s):
- ☐ Limits Based on Stack Testing: Please attach all relevant stack testing summary reports
- ☐ Other:

25. Rationale for Requesting the Limit(s):

DEQ AIR QUALITY PROGRAM
1410 N. Hilton, Boise, ID 83706
For assistance, call the
Air Permit Hotline – 1-877-5PERMIT

Emissions Unit - General **Form EU0**
Revision 4
08/28/08

Please see instructions on page 2 before filling out the form.

IDENTIFICATION

1. Company Name:	2. Facility Name:	3. Facility ID No:
Basic American Foods	BAF	011 00012

4. Brief Project Description: Tier I Permit Renewal

EMISSIONS UNIT (PROCESS) IDENTIFICATION & DESCRIPTION

5.	Emissions Unit (EU) Name:	CXX
6.	EU ID Number:	CXX
7.	EU Type:	☐ New Source ☐ Unpermitted Existing Source ☐ Modification to a Permitted Source -- Previous Permit #: Date Issued:
8.	Manufacturer:	CUSTOM
9.	Model:	CUSTOM
10..	Maximum Capacity:	7,500 LB/HR
11.	Date of Construction:	1971
12.	Date of Modification (if any):	1999
13.	Is this a Controlled Emission Unit?	☒ No ☐ Yes If Yes, complete the following section. If No, go to line 22.

EMISSIONS CONTROL EQUIPMENT

14. Control Equipment Name and ID:

15. Date of Installation: 16. Date of Modification (if any):

17. Manufacturer and Model Number:

18. ID(s) of Emission Unit Controlled:

19. Is operating schedule different than emission units(s) involved? ☐ Yes ☐ No

20. Does the manufacturer guarantee the control efficiency of the control equipment? ☐ Yes ☐ No (If Yes, attach and label manufacturer guarantee)

	Pollutant Controlled					
	PM	PM10	SO_2	NOx	VOC	CO
Control Efficiency						

21. If manufacturer's data is not available, attach a separate sheet of paper to provide the control equipment design specifications and performance data to support the above mentioned control efficiency.

EMISSION UNIT OPERATING SCHEDULE (hours/day, hours/year, or other)

22. Actual Operation:

23. Maximum Operation: 8760 HR/YR

REQUESTED LIMITS

24. Are you requesting any permit limits? ☐ Yes ☒ No (If Yes, indicate all that apply below)

☐ Operation Hour Limit(s):

☐ Production Limit(s):

☐ Material Usage Limit(s):

☐ Limits Based on Stack Testing: Please attach all relevant stack testing summary reports

☐ Other:

25. Rationale for Requesting the Limit(s):

DEQ AIR QUALITY PROGRAM
1410 N. Hilton, Boise, ID 83706
For assistance, call the
Air Permit Hotline – 1-877-5PERMIT

Emissions Unit - General **Form EU0**
Revision 4
08/28/08

Please see instructions on page 2 before filling out the form.

IDENTIFICATION

1. Company Name:	2. Facility Name:	3. Facility ID No:
Basic American Foods	BAF	011 00012

4. Brief Project Description: Tier I Permit Renewal

EMISSIONS UNIT (PROCESS) IDENTIFICATION & DESCRIPTION

5.	Emissions Unit (EU) Name:	CYY
6.	EU ID Number:	CYY
7.	EU Type:	☐ New Source ☐ Unpermitted Existing Source ☐ Modification to a Permitted Source -- Previous Permit #: Date Issued:
8.	Manufacturer:	CUSTOM
9.	Model:	CUSTOM
10..	Maximum Capacity:	7,500 LB/HR
11.	Date of Construction:	1971
12.	Date of Modification (if any):	1999
13.	Is this a Controlled Emission Unit?	☒ No ☐ Yes If Yes, complete the following section. If No, go to line 22.

EMISSIONS CONTROL EQUIPMENT

14. Control Equipment Name and ID:

15. Date of Installation: 16. Date of Modification (if any):

17. Manufacturer and Model Number:

18. ID(s) of Emission Unit Controlled:

19. Is operating schedule different than emission units(s) involved? ☐ Yes ☐ No

20. Does the manufacturer guarantee the control efficiency of the control equipment? ☐ Yes ☐ No (If Yes, attach and label manufacturer guarantee)

	Pollutant Controlled					
	PM	PM10	SO_2	NOx	VOC	CO
Control Efficiency						

21. If manufacturer's data is not available, attach a separate sheet of paper to provide the control equipment design specifications and performance data to support the above mentioned control efficiency.

EMISSION UNIT OPERATING SCHEDULE (hours/day, hours/year, or other)

22. Actual Operation:

23. Maximum Operation: 8760 HR/YR

REQUESTED LIMITS

24. Are you requesting any permit limits? ☐ Yes ☒ No (If Yes, indicate all that apply below)

- ☐ Operation Hour Limit(s):
- ☐ Production Limit(s):
- ☐ Material Usage Limit(s):
- ☐ Limits Based on Stack Testing: Please attach all relevant stack testing summary reports
- ☐ Other:

25. Rationale for Requesting the Limit(s):

DEQ AIR QUALITY PROGRAM
1410 N. Hilton, Boise, ID 83706
For assistance, call the
Air Permit Hotline – 1-877-5PERMIT

Emissions Unit - General **Form EU0**
Revision 4
08/28/08

Please see instructions on page 2 before filling out the form.

IDENTIFICATION

1. Company Name:	2. Facility Name:	3. Facility ID No:
Basic American Foods	BAF	011 00012

4. Brief Project Description: Tier I Permit Renewal

EMISSIONS UNIT (PROCESS) IDENTIFICATION & DESCRIPTION

5.	Emissions Unit (EU) Name:	HEB
6.	EU ID Number:	HEB
7.	EU Type:	☐ New Source ☐ Unpermitted Existing Source ☐ Modification to a Permitted Source -- Previous Permit #: Date Issued:
8.	Manufacturer:	CUSTOM
9.	Model:	CUSTOM
10..	Maximum Capacity:	3,500 LB/HR
11.	Date of Construction:	1992
12.	Date of Modification (if any):	1997
13.	Is this a Controlled Emission Unit?	☒ No ☐ Yes If Yes, complete the following section. If No, go to line 22.

EMISSIONS CONTROL EQUIPMENT

14. Control Equipment Name and ID:

15. Date of Installation: 16. Date of Modification (if any):

17. Manufacturer and Model Number:

18. ID(s) of Emission Unit Controlled:

19. Is operating schedule different than emission units(s) involved? ☐ Yes ☐ No

20. Does the manufacturer guarantee the control efficiency of the control equipment? ☐ Yes ☐ No (If Yes, attach and label manufacturer guarantee)

	Pollutant Controlled					
	PM	PM10	SO_2	NOx	VOC	CO
Control Efficiency						

21. If manufacturer's data is not available, attach a separate sheet of paper to provide the control equipment design specifications and performance data to support the above mentioned control efficiency.

EMISSION UNIT OPERATING SCHEDULE (hours/day, hours/year, or other)

22. Actual Operation:

23. Maximum Operation: 8760 HR/YR

REQUESTED LIMITS

24. Are you requesting any permit limits? ☐ Yes ☒ No (If Yes, indicate all that apply below)

☐ Operation Hour Limit(s):

☐ Production Limit(s):

☐ Material Usage Limit(s):

☐ Limits Based on Stack Testing: Please attach all relevant stack testing summary reports

☐ Other:

25. Rationale for Requesting the Limit(s):

DEQ AIR QUALITY PROGRAM
1410 N. Hilton, Boise, ID 83706
For assistance, call the
Air Permit Hotline – 1-877-5PERMIT

Emissions Unit - General **Form EU0**
Revision 4
08/28/08

Please see instructions on page 2 before filling out the form.

IDENTIFICATION

1. Company Name:	2. Facility Name:	3. Facility ID No:
Basic American Foods	BAF	011 00012

4. Brief Project Description: Tier I Permit Renewal

EMISSIONS UNIT (PROCESS) IDENTIFICATION & DESCRIPTION

5.	Emissions Unit (EU) Name:	HNL
6.	EU ID Number:	HNL
7.	EU Type:	☐ New Source ☐ Unpermitted Existing Source ☐ Modification to a Permitted Source -- Previous Permit #: Date Issued:
8.	Manufacturer:	CUSTOM
9.	Model:	CUSTOM
10..	Maximum Capacity:	3,500 LB/HR
11.	Date of Construction:	1998
12.	Date of Modification (if any):	
13.	Is this a Controlled Emission Unit?	☒ No ☐ Yes If Yes, complete the following section. If No, go to line 22.

EMISSIONS CONTROL EQUIPMENT

14. Control Equipment Name and ID:

15. Date of Installation: 16. Date of Modification (if any):

17. Manufacturer and Model Number:

18. ID(s) of Emission Unit Controlled:

19. Is operating schedule different than emission units(s) involved? ☐ Yes ☐ No

20. Does the manufacturer guarantee the control efficiency of the control equipment? ☐ Yes ☐ No (If Yes, attach and label manufacturer guarantee)

	Pollutant Controlled					
	PM	PM10	SO_2	NOx	VOC	CO
Control Efficiency						

21. If manufacturer's data is not available, attach a separate sheet of paper to provide the control equipment design specifications and performance data to support the above mentioned control efficiency.

EMISSION UNIT OPERATING SCHEDULE (hours/day, hours/year, or other)

22. Actual Operation:

23. Maximum Operation: 8760 HR/YR

REQUESTED LIMITS

24. Are you requesting any permit limits? ☐ Yes ☒ No (If Yes, indicate all that apply below)

☐ Operation Hour Limit(s):

☐ Production Limit(s):

☐ Material Usage Limit(s):

☐ Limits Based on Stack Testing: Please attach all relevant stack testing summary reports

☐ Other:

25. Rationale for Requesting the Limit(s):

DEQ AIR QUALITY PROGRAM
1410 N. Hilton, Boise, ID 83706
For assistance, call the
Air Permit Hotline – 1-877-5PERMIT

Emissions Unit - General **Form EU0**
Revision 4
08/28/08

Please see instructions on page 2 before filling out the form.

IDENTIFICATION

1. Company Name:	2. Facility Name:	3. Facility ID No:
Basic American Foods	BAF	011 00012

4. Brief Project Description: Tier I Permit Renewal

EMISSIONS UNIT (PROCESS) IDENTIFICATION & DESCRIPTION

5.	Emissions Unit (EU) Name:	CTQ
6.	EU ID Number:	CTQ
7.	EU Type:	☐ New Source ☐ Unpermitted Existing Source ☐ Modification to a Permitted Source -- Previous Permit #: Date Issued:
8.	Manufacturer:	CUSTOM
9.	Model:	CUSTOM
10..	Maximum Capacity:	2,000 LB/HR
11.	Date of Construction:	1973
12.	Date of Modification (if any):	
13.	Is this a Controlled Emission Unit?	☒ No ☐ Yes If Yes, complete the following section. If No, go to line 22.

EMISSIONS CONTROL EQUIPMENT

14. Control Equipment Name and ID:

15. Date of Installation: 16. Date of Modification (if any):

17. Manufacturer and Model Number:

18. ID(s) of Emission Unit Controlled:

19. Is operating schedule different than emission units(s) involved? ☐ Yes ☐ No

20. Does the manufacturer guarantee the control efficiency of the control equipment? ☐ Yes ☐ No (If Yes, attach and label manufacturer guarantee)

	Pollutant Controlled					
	PM	PM10	SO_2	NOx	VOC	CO
Control Efficiency						

21. If manufacturer's data is not available, attach a separate sheet of paper to provide the control equipment design specifications and performance data to support the above mentioned control efficiency.

EMISSION UNIT OPERATING SCHEDULE (hours/day, hours/year, or other)

22. Actual Operation:

23. Maximum Operation: 8760 HR/YR

REQUESTED LIMITS

24. Are you requesting any permit limits? ☐ Yes ☒ No (If Yes, indicate all that apply below)

☐ Operation Hour Limit(s):

☐ Production Limit(s):

☐ Material Usage Limit(s):

☐ Limits Based on Stack Testing: Please attach all relevant stack testing summary reports

☐ Other:

25. Rationale for Requesting the Limit(s):

DEQ AIR QUALITY PROGRAM
1410 N. Hilton, Boise, ID 83706
For assistance, call the
Air Permit Hotline – 1-877-5PERMIT

Emissions Unit - General **Form EU0**
Revision 4
08/28/08

Please see instructions on page 2 before filling out the form.

IDENTIFICATION

1. Company Name:	2. Facility Name:	3. Facility ID No:
Basic American Foods	BAF	011 00012

4. Brief Project Description: Tier I Permit Renewal

EMISSIONS UNIT (PROCESS) IDENTIFICATION & DESCRIPTION

5.	Emissions Unit (EU) Name:	CTR
6.	EU ID Number:	CTR
7.	EU Type:	☐ New Source ☐ Unpermitted Existing Source ☐ Modification to a Permitted Source -- Previous Permit #: Date Issued:
8.	Manufacturer:	CUSTOM
9.	Model:	CUSTOM
10..	Maximum Capacity:	2,000 LB/HR
11.	Date of Construction:	1973
12.	Date of Modification (if any):	
13.	Is this a Controlled Emission Unit?	☒ No ☐ Yes If Yes, complete the following section. If No, go to line 22.

EMISSIONS CONTROL EQUIPMENT

14. Control Equipment Name and ID:

15. Date of Installation: 16. Date of Modification (if any):

17. Manufacturer and Model Number:

18. ID(s) of Emission Unit Controlled:

19. Is operating schedule different than emission units(s) involved? ☐ Yes ☐ No

20. Does the manufacturer guarantee the control efficiency of the control equipment? ☐ Yes ☐ No (If Yes, attach and label manufacturer guarantee)

	Pollutant Controlled					
	PM	PM10	SO_2	NOx	VOC	CO
Control Efficiency						

21. If manufacturer's data is not available, attach a separate sheet of paper to provide the control equipment design specifications and performance data to support the above mentioned control efficiency.

EMISSION UNIT OPERATING SCHEDULE (hours/day, hours/year, or other)

22. Actual Operation:

23. Maximum Operation: 8760 HR/YR

REQUESTED LIMITS

24. Are you requesting any permit limits? ☐ Yes ☒ No (If Yes, indicate all that apply below)

☐ Operation Hour Limit(s):

☐ Production Limit(s):

☐ Material Usage Limit(s):

☐ Limits Based on Stack Testing: Please attach all relevant stack testing summary reports

☐ Other:

25. Rationale for Requesting the Limit(s):

DEQ AIR QUALITY PROGRAM
1410 N. Hilton, Boise, ID 83706
For assistance, call the
Air Permit Hotline – 1-877-5PERMIT

Emissions Unit - General **Form EU0**
Revision 4
08/28/08

Please see instructions on page 2 before filling out the form.

IDENTIFICATION

1. Company Name:	2. Facility Name:	3. Facility ID No:
Basic American Foods	BAF	011 00012

4. Brief Project Description: Tier I Permit Renewal

EMISSIONS UNIT (PROCESS) IDENTIFICATION & DESCRIPTION

5.	Emissions Unit (EU) Name:	CTS
6.	EU ID Number:	CTS
7.	EU Type:	☐ New Source ☐ Unpermitted Existing Source ☐ Modification to a Permitted Source -- Previous Permit #: Date Issued:
8.	Manufacturer:	CUSTOM
9.	Model:	CUSTOM
10..	Maximum Capacity:	2,000 LB/HR
11.	Date of Construction:	1973
12.	Date of Modification (if any):	
13.	Is this a Controlled Emission Unit?	☒ No ☐ Yes If Yes, complete the following section. If No, go to line 22.

EMISSIONS CONTROL EQUIPMENT

14. Control Equipment Name and ID:

15. Date of Installation: 16. Date of Modification (if any):

17. Manufacturer and Model Number:

18. ID(s) of Emission Unit Controlled:

19. Is operating schedule different than emission units(s) involved? ☐ Yes ☐ No

20. Does the manufacturer guarantee the control efficiency of the control equipment? ☐ Yes ☐ No (If Yes, attach and label manufacturer guarantee)

	Pollutant Controlled					
	PM	PM10	SO_2	NOx	VOC	CO
Control Efficiency						

21. If manufacturer's data is not available, attach a separate sheet of paper to provide the control equipment design specifications and performance data to support the above mentioned control efficiency.

EMISSION UNIT OPERATING SCHEDULE (hours/day, hours/year, or other)

22. Actual Operation:

23. Maximum Operation: 8760 HR/YR

REQUESTED LIMITS

24. Are you requesting any permit limits? ☐ Yes ☒ No (If Yes, indicate all that apply below)

☐ Operation Hour Limit(s):

☐ Production Limit(s):

☐ Material Usage Limit(s):

☐ Limits Based on Stack Testing: Please attach all relevant stack testing summary reports

☐ Other:

25. Rationale for Requesting the Limit(s):

DEQ AIR QUALITY PROGRAM
1410 N. Hilton, Boise, ID 83706
For assistance, call the
Air Permit Hotline – 1-877-5PERMIT

Emissions Unit - General **Form EU0**
Revision 4
08/28/08

Please see instructions on page 2 before filling out the form.

IDENTIFICATION

1. Company Name:	2. Facility Name:	3. Facility ID No:
Basic American Foods	BAF	011 00012

4. Brief Project Description: Tier I Permit Renewal

EMISSIONS UNIT (PROCESS) IDENTIFICATION & DESCRIPTION

5.	Emissions Unit (EU) Name:	CTT
6.	EU ID Number:	CTT
7.	EU Type:	☐ New Source ☐ Unpermitted Existing Source ☐ Modification to a Permitted Source -- Previous Permit #: Date Issued:
8.	Manufacturer:	CUSTOM
9.	Model:	CUSTOM
10..	Maximum Capacity:	2,000 LB/HR
11.	Date of Construction:	1973
12.	Date of Modification (if any):	
13.	Is this a Controlled Emission Unit?	☒ No ☐ Yes If Yes, complete the following section. If No, go to line 22.

EMISSIONS CONTROL EQUIPMENT

14. Control Equipment Name and ID:

15. Date of Installation: 16. Date of Modification (if any):

17. Manufacturer and Model Number:

18. ID(s) of Emission Unit Controlled:

19. Is operating schedule different than emission units(s) involved? ☐ Yes ☐ No

20. Does the manufacturer guarantee the control efficiency of the control equipment? ☐ Yes ☐ No (If Yes, attach and label manufacturer guarantee)

	Pollutant Controlled					
	PM	PM10	SO_2	NOx	VOC	CO
Control Efficiency						

21. If manufacturer's data is not available, attach a separate sheet of paper to provide the control equipment design specifications and performance data to support the above mentioned control efficiency.

EMISSION UNIT OPERATING SCHEDULE (hours/day, hours/year, or other)

22.	Actual Operation:	
23.	Maximum Operation:	8760 HR/YR

REQUESTED LIMITS

24. Are you requesting any permit limits? ☐ Yes ☒ No (If Yes, indicate all that apply below)

- ☐ Operation Hour Limit(s):
- ☐ Production Limit(s):
- ☐ Material Usage Limit(s):
- ☐ Limits Based on Stack Testing: Please attach all relevant stack testing summary reports
- ☐ Other:

25. Rationale for Requesting the Limit(s):

DEQ AIR QUALITY PROGRAM
1410 N. Hilton, Boise, ID 83706
For assistance, call the
Air Permit Hotline – 1-877-5PERMIT

Emissions Unit - General **Form EU0**
Revision 4
08/28/08

Please see instructions on page 2 before filling out the form.

IDENTIFICATION

1. Company Name:	2. Facility Name:	3. Facility ID No:
Basic American Foods	BAF	011 00012

4. Brief Project Description: Tier I Permit Renewal

EMISSIONS UNIT (PROCESS) IDENTIFICATION & DESCRIPTION

5.	Emissions Unit (EU) Name:	CNV
6.	EU ID Number:	CNV
7.	EU Type:	☐ New Source ☐ Unpermitted Existing Source ☐ Modification to a Permitted Source -- Previous Permit #: Date Issued:
8.	Manufacturer:	CUSTOM
9.	Model:	CUSTOM
10..	Maximum Capacity:	2,800 LB/HR
11.	Date of Construction:	2001
12.	Date of Modification (if any):	
13.	Is this a Controlled Emission Unit?	☒ No ☐ Yes If Yes, complete the following section. If No, go to line 22.

EMISSIONS CONTROL EQUIPMENT

14. Control Equipment Name and ID:

15. Date of Installation: 16. Date of Modification (if any):

17. Manufacturer and Model Number:

18. ID(s) of Emission Unit Controlled:

19. Is operating schedule different than emission units(s) involved? ☐ Yes ☐ No

20. Does the manufacturer guarantee the control efficiency of the control equipment? ☐ Yes ☐ No (If Yes, attach and label manufacturer guarantee)

	Pollutant Controlled					
	PM	PM10	SO_2	NOx	VOC	CO
Control Efficiency						

21. If manufacturer's data is not available, attach a separate sheet of paper to provide the control equipment design specifications and performance data to support the above mentioned control efficiency.

EMISSION UNIT OPERATING SCHEDULE (hours/day, hours/year, or other)

22. Actual Operation:

23. Maximum Operation: 8760 HR/YR

REQUESTED LIMITS

24. Are you requesting any permit limits? ☐ Yes ☒ No (If Yes, indicate all that apply below)

☐ Operation Hour Limit(s):

☐ Production Limit(s):

☐ Material Usage Limit(s):

☐ Limits Based on Stack Testing: Please attach all relevant stack testing summary reports

☐ Other:

25. Rationale for Requesting the Limit(s):

DEQ AIR QUALITY PROGRAM
1410 N. Hilton, Boise, ID 83706
For assistance, call the
Air Permit Hotline – 1-877-5PERMIT

Emissions Unit - General **Form EU0**
Revision 4
08/28/08

Please see instructions on page 2 before filling out the form.

IDENTIFICATION

1. Company Name:	2. Facility Name:	3. Facility ID No:
Basic American Foods	BAF	011 00012

4. Brief Project Description: Tier I Permit Renewal

EMISSIONS UNIT (PROCESS) IDENTIFICATION & DESCRIPTION

5.	Emissions Unit (EU) Name:	CNW
6.	EU ID Number:	CNW
7.	EU Type:	☐ New Source ☐ Unpermitted Existing Source ☐ Modification to a Permitted Source -- Previous Permit #: Date Issued:
8.	Manufacturer:	CUSTOM
9.	Model:	CUSTOM
10..	Maximum Capacity:	2,800 LB/HR
11.	Date of Construction:	2001
12.	Date of Modification (if any):	
13.	Is this a Controlled Emission Unit?	☒ No ☐ Yes If Yes, complete the following section. If No, go to line 22.

EMISSIONS CONTROL EQUIPMENT

14. Control Equipment Name and ID:

15. Date of Installation: 16. Date of Modification (if any):

17. Manufacturer and Model Number:

18. ID(s) of Emission Unit Controlled:

19. Is operating schedule different than emission units(s) involved? ☐ Yes ☐ No

20. Does the manufacturer guarantee the control efficiency of the control equipment? ☐ Yes ☐ No (If Yes, attach and label manufacturer guarantee)

	Pollutant Controlled					
	PM	PM10	SO_2	NOx	VOC	CO
Control Efficiency						

21. If manufacturer's data is not available, attach a separate sheet of paper to provide the control equipment design specifications and performance data to support the above mentioned control efficiency.

EMISSION UNIT OPERATING SCHEDULE (hours/day, hours/year, or other)

22. Actual Operation:

23. Maximum Operation: 8760 HR/YR

REQUESTED LIMITS

24. Are you requesting any permit limits? ☐ Yes ☒ No (If Yes, indicate all that apply below)

- ☐ Operation Hour Limit(s):
- ☐ Production Limit(s):
- ☐ Material Usage Limit(s):
- ☐ Limits Based on Stack Testing: Please attach all relevant stack testing summary reports
- ☐ Other:

25. Rationale for Requesting the Limit(s):

DEQ AIR QUALITY PROGRAM
1410 N. Hilton, Boise, ID 83706
For assistance, call the
Air Permit Hotline – 1-877-5PERMIT

Emissions Unit - General **Form EU0**
Revision 4
08/28/08

Please see instructions on page 2 before filling out the form.

IDENTIFICATION

1. Company Name:	2. Facility Name:	3. Facility ID No:
Basic American Foods	BAF	011 00012

4. Brief Project Description: Tier I Permit Renewal

EMISSIONS UNIT (PROCESS) IDENTIFICATION & DESCRIPTION

5.	Emissions Unit (EU) Name:	CTU
6.	EU ID Number:	CTU
7.	EU Type:	☐ New Source ☐ Unpermitted Existing Source ☐ Modification to a Permitted Source -- Previous Permit #: Date Issued:
8.	Manufacturer:	CUSTOM
9.	Model:	CUSTOM
10..	Maximum Capacity:	2,800 LB/HR
11.	Date of Construction:	1973
12.	Date of Modification (if any):	
13.	Is this a Controlled Emission Unit?	☒ No ☐ Yes If Yes, complete the following section. If No, go to line 22.

EMISSIONS CONTROL EQUIPMENT

14. Control Equipment Name and ID:

15. Date of Installation: 16. Date of Modification (if any):

17. Manufacturer and Model Number:

18. ID(s) of Emission Unit Controlled:

19. Is operating schedule different than emission units(s) involved? ☐ Yes ☐ No

20. Does the manufacturer guarantee the control efficiency of the control equipment? ☐ Yes ☐ No (If Yes, attach and label manufacturer guarantee)

	Pollutant Controlled					
	PM	PM10	SO_2	NOx	VOC	CO
Control Efficiency						

21. If manufacturer's data is not available, attach a separate sheet of paper to provide the control equipment design specifications and performance data to support the above mentioned control efficiency.

EMISSION UNIT OPERATING SCHEDULE (hours/day, hours/year, or other)

22. Actual Operation:

23. Maximum Operation: 8760 HR/YR

REQUESTED LIMITS

24. Are you requesting any permit limits? ☐ Yes ☒ No (If Yes, indicate all that apply below)

☐ Operation Hour Limit(s):

☐ Production Limit(s):

☐ Material Usage Limit(s):

☐ Limits Based on Stack Testing: Please attach all relevant stack testing summary reports

☐ Other:

25. Rationale for Requesting the Limit(s):

DEQ AIR QUALITY PROGRAM
1410 N. Hilton, Boise, ID 83706
For assistance, call the
Air Permit Hotline – 1-877-5PERMIT

Emissions Units - Industrial Boiler Information **Form EU5**
Revision 5
08/28/08

Please see instructions on page 2 before filling out the form.

IDENTIFICATION

1. Company Name:	2. Facility Name:	3 Facility ID No:
Basic American Foods	Blackfoot Facility	011 00012

4. Brief Project Description: Tier I Permit Renewal

EXEMPTION

Please see IDAPA 58.01.01.222 for a list of industrial boilers that are exempt from Permit to Construct requirements.

BOILER (EMISSION UNIT) DESCRIPTION AND SPECIFICATIONS

5. Type of Request: ☐ New Unit ☐ Unpermitted Existing Unit ☐ Modification to a Unit with Permit #:

6. Use of Boiler: ☒ % Used For Process ☐ % Used For Space Heat ☐ % Used For Generating Electricity ☐ Other:

7. Boiler ID Number: Boiler 1	8. Rated Capacity: ☒ 55 Million British Thermal Units Per Hour (MMBtu/hr) ☐ 1,000 Pounds Steam Per Hour (1,000 lb steam/hr)	
9. Construction Date: 1982	10. Manufacturer: Murray	11. Model: None
12. Date of Modification (if applicable): 2004	13. Serial Number (if available):	14. Control Device (if any): Boiler 1-2 Scrubber (when combusting oil) **Note: Attach applicable control equipment form(s)**

FUEL DESCRIPTION AND SPECIFICATIONS

15. Fuel Type	☒ Diesel Fuel (# 2) (gal/hr)	☒ Natural Gas (cf/hr)	☐ Coal (unit: /hr)	☒ Other Fuels (unit:gal /hr)
16. Full Load Consumption Rate	389.7	54,134		238.78
17. Actual Consumption Rate	389.7	54,134		238.78
18. Fuel Heat Content (Btu/unit, LHV)	136770	1020		145800
19. Sulfur Content wt%	1.75	0.2 gr/Ccf		0.5
20. Ash Content wt%		N/A		

STEAM DESCRIPTION AND SPECIFICATIONS

21. Steam Heat Content	NA	NA		
22. Steam Temperature (°F)	N/A	N/A		
23. Steam Pressure (psi)	N/A	N/A		
24 Steam Type	N/A	N/A	☐ Saturated ☐ Superheated	☐ Saturated ☐ Superheated

OPERATING LIMITS & SCHEDULE

25. Imposed Operating Limits (hours/year, or gallons fuel/year, etc.):	has combined operating limits with Boiler 2
26. Operating Schedule (hours/day, months/year, etc.):	8760 hr/yr
27. NSPS Applicability: ☐ Yes ☒ No	If Yes, which subpart:

DEQ AIR QUALITY PROGRAM
1410 N. Hilton, Boise, ID 83706
For assistance, call the
Air Permit Hotline – 1-877-5PERMIT

Emissions Units - Industrial Boiler Information **Form EU5**
Revision 5
08/28/08

Please see instructions on page 2 before filling out the form.

IDENTIFICATION

1. Company Name:	2. Facility Name:	3 Facility ID No:
Basic American Foods	Blackfoot Facility	011 00012
4. Brief Project Description:	Tier I Permit Renewal	

EXEMPTION

Please see IDAPA 58.01.01.222 for a list of industrial boilers that are exempt from Permit to Construct requirements.

BOILER (EMISSION UNIT) DESCRIPTION AND SPECIFICATIONS

5. Type of Request: ☐ New Unit ☐ Unpermitted Existing Unit ☐ Modification to a Unit with Permit #:

6. Use of Boiler: ☒ % Used For Process ☐ % Used For Space Heat ☐ % Used For Generating Electricity ☐ Other:

7. Boiler ID Number: Boiler 2	8. Rated Capacity: ☒ 76.1 Million British Thermal Units Per Hour (MMBtu/hr) ☐ 1,000 Pounds Steam Per Hour (1,000 lb steam/hr)	
9. Construction Date: 1994	10. Manufacturer: Johnston	11. Model: 509 Series
12. Date of Modification (if applicable): 2004	13. Serial Number (if available): TF1800 - 3H6250S	14. Control Device (if any): Boiler 1-2 Scrubber (when combusting oil) **Note: Attach applicable control equipment form(s)**

FUEL DESCRIPTION AND SPECIFICATIONS

15. Fuel Type	☒ Diesel Fuel (# 2) (gal/hr)	☒ Natural Gas (cf/hr)	☐ Coal (unit: /hr)	☒ Other Fuels (unit:gal /hr)
16. Full Load Consumption Rate	401.88	74,611		238.78
17. Actual Consumption Rate	401.88	74,611		238.78
18. Fuel Heat Content (Btu/unit, LHV)	136770	1020		145800
19. Sulfur Content wt%	0.5	0.2 gr/Ccf		0.5
20. Ash Content wt%		N/A		

STEAM DESCRIPTION AND SPECIFICATIONS

21. Steam Heat Content	NA	NA		
22. Steam Temperature (°F)	N/A	N/A		
23. Steam Pressure (psi)	N/A	N/A		
24 Steam Type	N/A	N/A	☐ Saturated ☐ Superheated	☐ Saturated ☐ Superheated

OPERATING LIMITS & SCHEDULE

25. Imposed Operating Limits (hours/year, or gallons fuel/year, etc.):	has combined operating limits with Boiler 1
26. Operating Schedule (hours/day, months/year, etc.):	8760 hr/yr
27. NSPS Applicability: ☒ Yes ☐ No	If Yes, which subpart: Dc

DEQ AIR QUALITY PROGRAM
1410 N. Hilton, Boise, ID 83706
For assistance, call the
Air Permit Hotline – 1-877-5PERMIT

Emissions Units - Industrial Boiler Information **Form EU5**
Revision 5
08/28/08

Please see instructions on page 2 before filling out the form.

IDENTIFICATION

1. Company Name:	2. Facility Name:	3 Facility ID No:
Basic American Foods	Blackfoot Facility	011 00012
4. Brief Project Description:	Tier I Permit Renewal	

EXEMPTION

Please see IDAPA 58.01.01.222 for a list of industrial boilers that are exempt from Permit to Construct requirements.

BOILER (EMISSION UNIT) DESCRIPTION AND SPECIFICATIONS

5. Type of Request: ☐ New Unit ☐ Unpermitted Existing Unit ☐ Modification to a Unit with Permit #:

6. Use of Boiler: ☒ % Used For Process ☐ % Used For Space Heat ☐ % Used For Generating Electricity ☐ Other:

7. Boiler ID Number: Boiler 3	8. Rated Capacity: ☒ 39 Million British Thermal Units Per Hour (MMBtu/hr) ☐ 1,000 Pounds Steam Per Hour (1,000 lb steam/hr)	
9. Construction Date: 1975	10. Manufacturer: Springfield	11. Model: 52
12. Date of Modification (if applicable): 1994	13. Serial Number (if available):	14. Control Device (if any): **Note: Attach applicable control equipment form(s)**

FUEL DESCRIPTION AND SPECIFICATIONS

15. Fuel Type	☒ Diesel Fuel (# 2) (gal/hr)	☒ Natural Gas (cf/hr)	☐ Coal (unit: /hr)	☐ Other Fuels (unit: /hr)
16. Full Load Consumption Rate	271.4	38,284		
17. Actual Consumption Rate	271.4	38,284		
18. Fuel Heat Content (Btu/unit, LHV)	136770	1020		
19. Sulfur Content wt%	0.05	0.2 gr/Ccf		
20. Ash Content wt%		N/A		

STEAM DESCRIPTION AND SPECIFICATIONS

21. Steam Heat Content	NA	NA		
22. Steam Temperature (°F)	N/A	N/A		
23. Steam Pressure (psi)	N/A	N/A		
24 Steam Type	N/A	N/A	☐ Saturated ☐ Superheated	☐ Saturated ☐ Superheated

OPERATING LIMITS & SCHEDULE

25. Imposed Operating Limits (hours/year, or gallons fuel/year, etc.):	
26. Operating Schedule (hours/day, months/year, etc.):	8760 hr/yr
27. NSPS Applicability: ☐ Yes ☒ No	If Yes, which subpart:

DEQ AIR QUALITY PROGRAM
1410 N. Hilton, Boise, ID 83706
For assistance, call the
Air Permit Hotline – 1-877-5PERMIT

Venturi Scrubber Control Equipment - **Form VSCE**
Revision 2
08/28/08

Please see instructions on page 2 before filling out the form.

IDENTIFICATION

1. Company Name:	Basic American Foods	2. Facility Name:	Blackfoot Facility	3. Facility ID No.:	Boiler 1-2 Scrubber

4. Brief Project Description:

EMISSION UNIT ID				SCRUBBER						
5.	6.	7.	8.	9.	10.	11.	12.	13	14.	15.
Emission Unit	EU ID No.	CE ID No.	Stack ID No.	Manufacturer Name	Model No.	Efficiency (PM_{10}@70%, SO_2@50%, etc.)	Basis for Efficiency (i.e., guarantee, source test, etc.)	Design Scrubbing Liquid Flow (gpm)	Design Pressure Drop (in H_2O)	Design pH (for acid gas control)
Boiler 1 Boiler 2	BOILER 1 BOILER 2	Boiler 1-2 Scrubber	Boioler 1-2	Carbo-Tech Environmental Group	48x48-96HE	PM@50% PM-10@50% SO2@75%	manufacturer guarantee	323 gpm	>10 and <15	8.4-9.5

Describe the maintenance required to assure the scrubber operates as designed (i.e. frequency of inspection, nozzle inspection, nozzle cleaning, etc.). (Provide an attachment if necessary.)

DEQ AIR QUALITY PROGRAM
1410 N. Hilton, Boise, ID 83706
For assistance, call the
Air Permit Hotline – 1-877-5PERMIT

Scrubber Control Equipment - **Form SCE**
Revision 5
08/28/08

Please see instructions on page 2 before filling out the form.

IDENTIFICATION

1. Company Name:	Basic American Foods	2. Facility Name:	Blackfoot Facility	3. Facility ID No.:	011 00012
4. Brief Project Description:	Tier I Permit Renewal				

EMISSION UNIT ID				SCRUBBER					
5.	6.	7.	8.	9.	10.	11.	12.	13	14.
Emission Unit	EU ID No.	CE ID No.	Stack ID No.	Manufacturer Name	Model No.	Type	Dimensions In Feet (Ht x Dia x L)	Water Flow (gpm)	Pressure Drop (in H_2O)
CIR	CIR	CIR RotoClone	CIR-RTC	AAF International	W10035	centrfugal	8'Hx11'Lx7'W	5.5-6.0	NA

APPENDIX C

FACILITY EMISSION INVENTORY

The following pages contain a facility emission inventory for point sources. In addition to the point sources, the Blackfoot Facility has fugitive PM emissions from road dust and ODS emissions from refrigeration units.

APPENDIX C

FACILITY EMISSION INVENTORY

APPENDIX C

FACILITY EMISSION INVENTORY

The following pages contain a facility emission inventory for point sources. In addition to the point sources, the Blackfoot Facility has fugitive PM emissions from road dust and ODS emissions from refrigeration units.

Table C-1
Emissions Summary

Production Process	Stack Identification	Estimated Annual Emissions, tons								
		CO	NOX	SO2	PM	PM-10	VOC	Lead	GHG	CO2e
Boilers	Boiler 1	-	-	-	9.56	-	1.3	-	28,453	28,626
Boilers	Boiler 2	-	-	-	11.80	-	1.8	1.45E-03	39,215	39,454
Boilers	Boiler 3	-	-	-	1.71	-	0.9	3.28E-04	20,122	20,245
Boilers	Boilers 1 and 2	-	-	-	-	-	-	-	-	-
Boilers	Boilers 1, 2, and 3	46.0	198.0	145.0	-	18.3	-	-	-	-
A	DHQ	-	-	-	1.44	1.38	-	-	-	-
A	DHT	12.3	2.4	0.3	6.48	5.06	0.2	1.50E-05	3,607	3,629
A	DHU	12.3	2.4	0.3	6.48	5.06	0.2	1.50E-05	3,607	3,629
A	DHZ	6.8	1.3	0.5	10.67	7.63	0.1	1.29E-05	3,092	3,111
A	DKV	-	-	-	1.85	1.08	-	-	-	-
A	DKW	-	-	-	0.06	0.03	-	-	-	-
B	DXS	-	-	-	0.83	0.76	-	-	-	-
B	DUO	-	-	-	0.83	0.76	-	-	-	-
B	DPY	-	-	-	0.83	0.76	-	-	-	-
B	DPZ	-	-	-	0.83	0.76	-	-	-	-
B	DUQ	12.3	2.4	0.3	6.48	5.06	0.2	1.50E-05	3,607	3,629
B	DUT	12.3	2.4	0.3	6.48	5.06	0.2	1.50E-05	3,607	3,629
B	DUV	13.7	2.7	1.0	5.32	3.58	0.3	2.58E-05	6,184	6,221
B	DQA	12.3	2.4	0.3	6.48	5.06	0.2	1.50E-05	3,607	3,629
B	DQB	12.3	2.4	0.3	6.48	5.06	0.2	1.50E-05	3,607	3,629
B	DUY	-	-	-	0.11	0.07	-	-	-	-
B	DUZ	-	-	-	0.11	0.07	-	-	-	-
B	DSO	-	-	0.1	1.22	1.06	-	-	-	-
B	DSK	-	-	-	0.34	0.18	-	-	-	-
B	DRY	-	-	-	0.18	0.09	-	-	-	-
C	ALB	-	-	0.1	0.68	0.44	-	-	-	-
C	ALT	-	-	-	0.06	0.03	-	-	-	-
C	ALQ	-	-	0.1	0.36	0.28	-	-	-	-
C	ALY	-	-	-	0.02	0.01	-	-	-	-
C	ALX	-	-	-	0.11	0.05	-	-	-	-
C	ALV	-	-	0.1	1.12	0.72	-	-	-	-
C	ALW	-	-	0.1	0.59	0.46	-	-	-	-
C	AEV	3.8	0.7	0.1	0.74	0.48	0.1	7.09E-06	1,700	1,711
C	AEW	-	-	0.1	0.46	0.34	-	-	-	-
C	AGQ	-	-	-	0.03	0.01	-	-	-	-
C	CIR_RTC	-	-	4.1	1.72	1.72	-	-	-	-
C	CHV	-	-	-	0.11	0.03	-	-	-	-
C	CXX	11.9	2.6	1.4	9.86	7.51	0.3	2.30E-05	5,527	5,560
C	CYY	10.3	1.5	1.4	8.32	7.16	0.2	1.62E-05	3,878	3,901
C	CHX	6.2	2.7	0.1	1.99	1.49	0.2	1.68E-05	4,030	4,054
C	CHY	3.7	1.6	0.2	0.69	0.50	0.1	9.92E-06	2,381	2,395
C	CHZ	1.8	0.8	0.2	0.50	0.26	0.1	4.85E-06	1,165	1,172
C	TEE	-	-	0.2	0.17	0.07	-	-	-	-
C	TEM	-	-	0.2	0.17	0.07	-	-	-	-
C	HEB	2.0	1.3	1.1	7.12	6.17	0.3	2.31E-05	5,555	5,589
C	HNL	0.6	0.4	0.2	1.70	1.37	0.1	6.91E-06	1,659	1,669
C	CBB	1.7	0.3	0.4	0.95	0.79	0.0	3.22E-06	773	778
C	CTQ	4.6	0.9	0.3	0.90	0.63	0.1	8.60E-06	2,065	2,077
C	CTR	7.5	1.5	0.3	0.94	0.61	0.2	1.41E-05	3,395	3,416
C	CTS	10.0	2.0	0.2	0.35	0.19	0.2	1.89E-05	4,525	4,553
C	CTT	11.0	2.2	0.2	0.38	0.16	0.2	2.08E-05	4,998	5,029
C	CNV	13.7	2.7	0.2	0.59	0.58	0.3	2.58E-05	6,184	6,221
C	CNW	13.7	2.7	0.2	0.61	0.59	0.3	2.58E-05	6,184	6,221
C	CTU	-	-	0.5	4.49	3.96	-	-	-	-
C	CTZ	0.7	0.5	0.4	1.49	1.00	0.3	2.32E-05	5,565	5,599
C	TCD	2.3	0.4	0.5	0.15	0.15	0.0	4.29E-06	1,031	1,037
C	TCO	-	-	-	0.15	0.15	-	-	-	-
C	TAC	1.4	0.3	0.1	0.80	0.69	0.0	2.68E-06	644	648
C	TAH	1.4	0.3	0.1	0.80	0.69	0.0	2.68E-06	644	648
C	EUW	-	-	-	0.02	0.02	-	-	-	-
C	SUF	-	-	-	0.02	0.02	-	-	-	-
C	DSX	-	-	-	0.07	0.04	-	-	-	-
C	EGS	-	-	-	0.08	0.04	-	-	-	-
C	EGT	-	-	-	0.08	0.04	-	-	-	-
C	FIF	-	-	-	0.13	0.13	-	-	-	-
Total - Point Sources		248.4	241.4	161.6	136.15	106.51	8.3	2.16E-03	180,609	181,708

Table C-2
Carbon Monoxide Emission Factors

Production Process	Stack Identification Code	Annual Emissions		
		Emission Factor	Units	Basis for Factor
Boilers	Boiler 1	*Enforceable limit from PTC P-050301 (10/05)*		
Boilers	Boiler 2			
Boilers	Boiler 3			
Boilers	Boilers 1 and 2			
Boilers	Boilers 1, 2, and 3			
A	DHT	0.400	lbs CO/ MM Btu	Similarity to stack DUT.
A	DHU	0.400	lbs CO/ MM Btu	Similarity to stack DUT.
A	DHZ	0.260	lbs CO/ MM Btu	General CO emission factor developed from emission measurements of various BAF process burners.
B	DUQ	0.400	lbs CO/ MM Btu	Similarity to stack DUT.
B	DUT	0.400	lbs CO/ MM Btu	Average of direct measurements of stack CO emissions in Dec 97 and Oct 2000.
B	DQA	0.400	lbs CO/ MM Btu	Similarity to stack DUT.
B	DQB	0.400	lbs CO/ MM Btu	Similarity to stack DUT.
B	DUV	0.260	lbs CO/ MM Btu	General CO emission factor developed from emission measurements of various BAF process burners.
C	AEV	0.260	lbs CO/ MM Btu	General CO emission factor developed from emission measurements of various BAF process burners.
C	CXX	0.254	lbs CO/ MM Btu	Based on stack emission measurements (Oct 2000).
C	CYY	0.313	lbs CO/ MM Btu	Based on stack emission measurements (Oct 2000).
C	CHX	0.182	lbs CO/ MM Btu	Based on results of stack emission tests conducted in November 2011.
C	CHY	0.182	lbs CO/ MM Btu	Based on results of stack emission tests conducted in November 2011.
C	CHZ	0.182	lbs CO/ MM Btu	Based on results of stack emission tests conducted in November 2011.
C	HEB	0.043	lbs CO/ MM Btu	Based on stack emission measurements (Oct 2000).
C	HNL	0.043	lbs CO/ MM Btu	Based on stack emission measurements (Oct 2000).
C	CBB	0.260	lbs CO/ MM Btu	General CO emission factor developed from emission measurements of various BAF process burners.
C	CTQ	0.260	lbs CO/ MM Btu	General CO emission factor developed from emission measurements of various BAF process burners.
C	CTR	0.260	lbs CO/ MM Btu	General CO emission factor developed from emission measurements of various BAF process burners.

Table C-2
Carbon Monoxide Emission Factors

Production Process	Stack Identification Code	Annual Emissions		
		Emission Factor	Units	Basis for Factor
C	CTS	0.260	lbs CO/ MM Btu	General CO emission factor developed from emission measurements of various BAF process burners.
C	CTT	0.260	lbs CO/ MM Btu	General CO emission factor developed from emission measurements of various BAF process burners.
C	CNV	0.260	lbs CO/ MM Btu	General CO emission factor developed from emission measurements of various BAF process burners.
C	CNW	0.260	lbs CO/ MM Btu	General CO emission factor developed from emission measurements of various BAF process burners.
C	CTZ	0.014	lbs CO/ MM Btu	Based on burner manufacturer specification of 20 ppmv CO at 3% 02
C	TCD	0.260	lbs CO/ MM Btu	General CO emission factor developed from emission measurements of various BAF process burners.
C	TAC	0.260	lbs CO/ MM Btu	General CO emission factor developed from emission measurements of various BAF process burners.
C	TAH	0.260	lbs CO/ MM Btu	General CO emission factor developed from emission measurements of various BAF process burners.
Plant	Heaters	0.082	lb CO/MMBTU	Based on AP-42, Table 1.4-1 (2/98), for uncontrolled combustion in boiler < 100 MMBTU/hr, and assuming 1020 BTU/scf. On an annual basis, firing assumed to occur at a maximum of 50% of burner capacity.

Table C-3
Estimated Carbon Monoxide Emissions

Production Process	Stack Identification Code	Annual Emissions				
		Emission Factor	Emission Factor Units	Operating Rate	Operating Units	Annual Emissions, tpy
Boilers	Boiler 1	*Enforceable limit from PTC P-050301 (10/05)*				
Boilers	Boiler 2					
Boilers	Boiler 3					
Boilers	Boilers 1 and 2					
Boilers	Boilers 1, 2, and 3					46.0
A	DHT	0.40	lbs CO/ MM Btu	61,320	MMBtu	12.3
A	DHU	0.40	lbs CO/ MM Btu	61,320	MMBtu	12.3
A	DHZ	0.26	lbs CO/ MM Btu	52,560	MMBtu	6.8
B	DUQ	0.40	lbs CO/ MM Btu	61,320	MMBtu	12.3
B	DUT	0.40	lbs CO/ MM Btu	61,320	MMBtu	12.3
B	DQA	0.40	lbs CO/ MM Btu	61,320	MMBtu	12.3
B	DQB	0.40	lbs CO/ MM Btu	61,320	MMBtu	12.3
B	DUV	0.26	lbs CO/ MM Btu	105,120	MMBtu	13.7
C	AEV	0.26	lbs CO/ MM Btu	28,908	MMBtu	3.8
C	CXX	0.25	lbs CO/ MM Btu	93,951	MMBtu	11.9
C	CYY	0.31	lbs CO/ MM Btu	65,919	MMBtu	10.3
C	CHX	0.18	lbs CO/ MM Btu	68,503	MMBtu	6.2
C	CHY	0.18	lbs CO/ MM Btu	40,471	MMBtu	3.7
C	CHZ	0.18	lbs CO/ MM Btu	19,798	MMBtu	1.8
C	HEB	0.04	lbs CO/ MM Btu	94,433	MMBtu	2.0
C	HNL	0.04	lbs CO/ MM Btu	28,207	MMBtu	0.6
C	CBB	0.26	lbs CO/ MM Btu	13,140	MMBtu	1.7
C	CTQ	0.26	lbs CO/ MM Btu	35,097	MMBtu	4.6
C	CTR	0.26	lbs CO/ MM Btu	57,715	MMBtu	7.5
C	CTS	0.26	lbs CO/ MM Btu	76,931	MMBtu	10.0
C	CTT	0.26	lbs CO/ MM Btu	84,971	MMBtu	11.0
C	CNV	0.26	lbs CO/ MM Btu	105,120	MMBtu	13.7
C	CNW	0.26	lbs CO/ MM Btu	105,120	MMBtu	13.7
C	CTZ	0.01	lbs CO/ MM Btu	94,608	MMBtu	0.7
C	TCD	0.26	lbs CO/ MM Btu	17,520	MMBtu	2.3
C	TAC	0.26	lbs CO/ MM Btu	10,950	MMBtu	1.4
C	TAH	0.26	lbs CO/ MM Btu	10,950	MMBtu	1.4
Plant	Heaters	0.08	lb CO/MMBTU	339,781	MMBtu	14.0

Table C-4
Estimated Nitrogen Oxides Emissions

Production Process	Stack Identification Code	Annual Emissions		
		Emission Factor	Units	Basis for Factor
Boilers	Boiler 1	*Enforceable limit from PTC P-050301 (10/05)*		
Boilers	Boiler 2			
Boilers	Boiler 3			
Boilers	Boilers 1 and 2			
Boilers	Boilers 1, 2, and 3			
A	DHT	0.077	lbs NOx/MM Btu	Similarity to stack DUT.
A	DHU	0.077	lbs NOx/MM Btu	Similarity to stack DUT.
A	DHZ	0.051	lbs NOx/MM Btu	General NOx emission factor developed from emission measurements of various BAF process burners.
B	DUQ	0.077	lbs NOx/MM Btu	Similarity to stack DUT.
B	DUT	0.077	lbs NOx/MM Btu	Average of direct measurements of stack NOx emissions in Dec 97 and Oct 2000.
B	DQA	0.077	lbs NOx/MM Btu	Similarity to stack DUT.
B	DQB	0.077	lbs NOx/MM Btu	Similarity to stack DUT.
B	DUV	0.051	lbs NOx/MM Btu	General NOx emission factor developed from emission measurements of various BAF process burners.
C	AEV	0.051	lbs NOx/MM Btu	General NOx emission factor developed from emission measurements of various BAF process burners.
C	CXX	0.054	lbs NOx/MM Btu	Based on stack emission measurements (Oct 2000).
C	CYY	0.047	lbs NOx/MM Btu	Based on stack emission measurements (Oct 2000).
C	CHX	0.078	lbs NOx/MM Btu	Based on results of stack emission tests conducted in November 2011.
C	CHY	0.078	lbs NOx/MM Btu	Based on results of stack emission tests conducted in November 2011.
C	CHZ	0.078	lbs NOx/MM Btu	Based on results of stack emission tests conducted in November 2011.
C	HEB	0.027	lbs NOx/MM Btu	Based on stack emission measurements (Oct 2000).
C	HNL	0.027	lbs NOx/MM Btu	Based on stack emission measurements (Oct 2000).
C	CBB	0.051	lbs NOx/MM Btu	General NOx emission factor developed from emission measurements of various BAF process burners.
C	CTQ	0.051	lbs NOx/MM Btu	General NOx emission factor developed from emission measurements of various BAF process burners.
C	CTR	0.051	lbs NOx/MM Btu	General NOx emission factor developed from emission measurements of various BAF process burners.

Table C-4
Estimated Nitrogen Oxides Emissions

Production Process	Stack Identification Code	Annual Emissions		
		Emission Factor	Units	Basis for Factor
C	CTS	0.051	lbs NOx/MM Btu	General NOx emission factor developed from emission measurements of various BAF process burners.
C	CTT	0.051	lbs NOx/MM Btu	General NOx emission factor developed from emission measurements of various BAF process burners.
C	CNV	0.051	lbs NOx/MM Btu	General NOx emission factor developed from emission measurements of various BAF process burners.
C	CNW	0.051	lbs NOx/MM Btu	General NOx emission factor developed from emission measurements of various BAF process burners.
C	CTZ	0.012	lbs NOx/MM Btu	Based on burner manufacturer specification of 10ppmv NOX at 3% 02
C	TCD	0.051	lbs NOx/MM Btu	General NOx emission factor developed from emission measurements of various BAF process burners.
C	TAC	0.051	lbs NOx/MM Btu	General NOx emission factor developed from emission measurements of various BAF process burners.
C	TAH	0.051	lbs NOx/MM Btu	General NOx emission factor developed from emission measurements of various BAF process burners.
Plant	Heaters	0.098	lb NOx/MMBTU	Based on AP-42, Table 1.4-1 (2/98), for uncontrolled combustion in boiler < 100 MMBTU/hr, and assuming 1020 BTU/scf. On an annual basis, firing assumed to occur at a maximum of 50% of burner capacity.

Table C-5
Estimated Nitrogen Oxides Emissions

Production Process	Stack Identification Code	Annual Emissions				
		Emission Factor	Emission Factor Units	Operating Rate	Operating Units	Annual Emissions, tpy
Boilers	Boiler 1	*Enforceable limit from PTC P-050301 (10/05)*				
Boilers	Boiler 2					
Boilers	Boiler 3					
Boilers	Boilers 1 and 2					
Boilers	Boilers 1, 2, and 3					198.0
A	DHT	0.08	lbs NOx/MM Btu	61,320	MMBtu	2.4
A	DHU	0.08	lbs NOx/MM Btu	61,320	MMBtu	2.4
A	DHZ	0.05	lbs NOx/MM Btu	52,560	MMBtu	1.3
B	DUQ	0.08	lbs NOx/MM Btu	61,320	MMBtu	2.4
B	DUT	0.08	lbs NOx/MM Btu	61,320	MMBtu	2.4
B	DQA	0.08	lbs NOx/MM Btu	61,320	MMBtu	2.4
B	DQB	0.08	lbs NOx/MM Btu	61,320	MMBtu	2.4
B	DUV	0.05	lbs NOx/MM Btu	105,120	MMBtu	2.7
C	AEV	0.05	lbs NOx/MM Btu	28,908	MMBtu	0.7
C	CXX	0.05	lbs NOx/MM Btu	93,951	MMBtu	2.6
C	CYY	0.05	lbs NOx/MM Btu	65,919	MMBtu	1.5
C	CHX	0.08	lbs NOx/MM Btu	68,503	MMBtu	2.7
C	CHY	0.08	lbs NOx/MM Btu	40,471	MMBtu	1.6
C	CHZ	0.08	lbs NOx/MM Btu	19,798	MMBtu	0.8
C	HEB	0.03	lbs NOx/MM Btu	94,433	MMBtu	1.3
C	HNL	0.03	lbs NOx/MM Btu	28,207	MMBtu	0.4
C	CBB	0.05	lbs NOx/MM Btu	13,140	MMBtu	0.3
C	CTQ	0.05	lbs NOx/MM Btu	35,097	MMBtu	0.9
C	CTR	0.05	lbs NOx/MM Btu	57,715	MMBtu	1.5
C	CTS	0.05	lbs NOx/MM Btu	76,931	MMBtu	2.0
C	CNV	0.05	lbs NOx/MM Btu	105,120	MMBtu	2.7
C	CNW	0.05	lbs NOx/MM Btu	105,120	MMBtu	2.7
C	CTZ	0.01	lbs NOx/MM Btu	94,608	MMBtu	0.5
C	CTT	0.05	lbs NOx/MM Btu	84,971	MMBtu	2.2
C	TCD	0.05	lbs NOx/MM Btu	17,520	MMBtu	0.4
C	TAC	0.05	lbs NOx/MM Btu	10,950	MMBtu	0.3
C	TAH	0.05	lbs NOx/MM Btu	10,950	MMBtu	0.3
Plant	Heaters	0.10	lb NOx/MMBTU	339,781	MMBtu	16.7

Table C-6
Sulfur Dioxide Emission Factors

Production Process	Stack Identification Code	Process Related Sulfur Dioxide Emissions			Combustion Related Sulfur Dioxide Emissions		
		Emission Factor	Emission Factor Units	Basis for Emission Factor	Annual Emissions		Basis for Combustion Emission Factor
Boilers	Boiler 1	-	NA	NA	*Enforceable limit from PTC P-050301 (10/05)*		
Boilers	Boiler 2	-	NA	NA			
Boilers	Boiler 3	-	NA	NA			
Boilers	Boilers 1 and 2	-	NA	NA			
Boilers	Boilers 1, 2, and 3	-	NA	NA			
A	DHT	0.005	lbs SO2/000 lbs unit process throughput	Assumed to be the same as stack DUT.	0.0024	lb SO2/MMBtu	Based on AP-42, Table 1.4-2 (7/98), for uncontrolled combustion and assuming 1020 BTU/scf and 0.8 gr/Ccf sulfur content of natural gas.
A	DHU	0.005	lbs SO2/000 lbs unit process throughput	Assumed to be the same as stack DUT.	0.0024	lb SO2/MMBtu	Based on AP-42, Table 1.4-2 (7/98), for uncontrolled combustion and assuming 1020 BTU/scf and 0.8 gr/Ccf sulfur content of natural gas.
A	DHZ	0.005	lbs SO2/000 lbs unit process throughput	Assumed to be the same as stack DUT.	0.0024	lb SO2/MMBtu	Based on AP-42, Table 1.4-2 (7/98), for uncontrolled combustion and assuming 1020 BTU/scf and 0.8 gr/Ccf sulfur content of natural gas.
B	DUQ	0.005	lbs SO2/000 lbs unit process throughput	Assumed to be the same as stack DUT.	0.0024	lb SO2/MMBtu	Based on AP-42, Table 1.4-2 (7/98), for uncontrolled combustion and assuming 1020 BTU/scf and 0.8 gr/Ccf sulfur content of natural gas.
B	DUT	0.005	lbs SO2/000 lbs unit process throughput	Average of direct measurements of stack SO2 emissions in Dec 97 and Oct 2000.	0.0024	lb SO2/MMBtu	Based on AP-42, Table 1.4-2 (7/98), for uncontrolled combustion and assuming 1020 BTU/scf and 0.8 gr/Ccf sulfur content of natural gas.
B	DQA	0.005	lbs SO2/000 lbs unit process throughput	Assumed to be the same as stack DUT.	0.0024	lb SO2/MMBtu	Based on AP-42, Table 1.4-2 (7/98), for uncontrolled combustion and assuming 1020 BTU/scf and 0.8 gr/Ccf sulfur content of natural gas.
B	DQB	0.005	lbs SO2/000 lbs unit process throughput	Assumed to be the same as stack DUT.	0.0024	lb SO2/MMBtu	Based on AP-42, Table 1.4-2 (7/98), for uncontrolled combustion and assuming 1020 BTU/scf and 0.8 gr/Ccf sulfur content of natural gas.
B	DUV	0.005	lbs SO2/000 lbs unit process throughput	Assumed to be the same as stack DUT.	0.0024	lb SO2/MMBtu	Based on AP-42, Table 1.4-2 (7/98), for uncontrolled combustion and assuming 1020 BTU/scf and 0.8 gr/Ccf sulfur content of natural gas.
B	DSO	0.005	lbs SO2/000 lbs unit process throughput	Assumed to be the same as stack DUT.	-	-	
C	ALB	0.011	lbs SO2/000 lbs product	Estimated 10% conversion of sulfite to SO2 within process. Emission allocated equally between stacks ALB and ALQ	-	-	
C	ALQ	0.011	lbs SO2/000 lbs product	Estimated 10% conversion of sulfite to SO2 within process. Emission allocated equally between stacks ALB and ALQ	-	-	

Table C-6
Sulfur Dioxide Emission Factors

Production Process	Stack Identification Code	Process Related Sulfur Dioxide Emissions			Combustion Related Sulfur Dioxide Emissions		
		Emission Factor	Emission Factor Units	Basis for Emission Factor	Annual Emissions		Basis for Combustion Emission Factor
C	ALV	0.011	lbs SO2/000 lbs product	Estimated 10% conversion of sulfite to SO2 within process. Emission allocated equally between stacks ALV and ALW	-	-	
C	ALW	0.011	lbs SO2/000 lbs product	Estimated 10% conversion of sulfite to SO2 within process. Emission allocated equally between stacks ALV and ALW	-	-	
C	AEV	0.011	lbs SO2/000 lbs product	Estimated 10% conversion of sulfite to SO2 within process. Emission allocated equally between stacks AEV and AEW	0.0024	lb SO2/MMBtu	Based on AP-42, Table 1.4-2 (7/98), for uncontrolled combustion and assuming 1020 BTU/scf and 0.8 gr/Ccf sulfur content of natural gas.
C	AEW	0.011	lbs SO2/000 lbs product	Estimated 10% conversion of sulfite to SO2 within process. Emission allocated equally between stacks AEV and AEW	-	-	
C	CIR_RTC	0.11	lbs SO2/000 lbs product	Estimated 10% conversion of sulfite to SO2 within process.	-	-	
C	CXX	0.058	lbs SO2/000 lbs product	Direct measurement.	0.0024	lb SO2/MMBtu	Based on AP-42, Table 1.4-2 (7/98), for uncontrolled combustion and assuming 1020 BTU/scf and 0.8 gr/Ccf sulfur content of natural gas.
C	CYY	0.061	lbs SO2/000 lbs product	Direct measurement.	0.0024	lb SO2/MMBtu	Based on AP-42, Table 1.4-2 (7/98), for uncontrolled combustion and assuming 1020 BTU/scf and 0.8 gr/Ccf sulfur content of natural gas.
C	CHX	0.000	lbs SO2/000 lbs product	Estimated 10% conversion of sulfite to SO2 within process. Emission allocated among stacks based on drying profile and stack exhaust rates.	0.0024	lb SO2/MMBtu	Based on AP-42, Table 1.4-2 (7/98), for uncontrolled combustion and assuming 1020 BTU/scf and 0.8 gr/Ccf sulfur content of natural gas.
C	CHY	0.019	lbs SO2/000 lbs product	Estimated 10% conversion of sulfite to SO2 within process. Emission allocated among stacks based on drying profile and stack exhaust rates.	0.0024	lb SO2/MMBtu	Based on AP-42, Table 1.4-2 (7/98), for uncontrolled combustion and assuming 1020 BTU/scf and 0.8 gr/Ccf sulfur content of natural gas.
C	CHZ	0.026	lbs SO2/000 lbs product	Estimated 10% conversion of sulfite to SO2 within process. Emission allocated among stacks based on drying profile and stack exhaust rates.	0.0024	lb SO2/MMBtu	Based on AP-42, Table 1.4-2 (7/98), for uncontrolled combustion and assuming 1020 BTU/scf and 0.8 gr/Ccf sulfur content of natural gas.
C	TEE	0.029	lbs SO2/000 lbs product	Estimated 10% conversion of sulfite to SO2 within process. Emission allocated among stacks based on drying profile and stack exhaust rates.	-	-	
C	TEM	0.031	lbs SO2/000 lbs product	Estimated 10% conversion of sulfite to SO2 within process. Emission allocated among stacks based on drying profile and stack exhaust rates.	-	-	
C	HEB	0.102	lbs SO2/000 lbs product	Direct measurement.	0.0024	lb SO2/MMBtu	Based on AP-42, Table 1.4-2 (7/98), for uncontrolled combustion and assuming 1020 BTU/scf and 0.8 gr/Ccf sulfur content of natural gas.

Table C-6
Sulfur Dioxide Emission Factors

Production Process	Stack Identification Code	Process Related Sulfur Dioxide Emissions			Combustion Related Sulfur Dioxide Emissions		
		Emission Factor	Emission Factor Units	Basis for Emission Factor	Annual Emissions		Basis for Combustion Emission Factor
C	HNL	0.017	lbs SO2/000 lbs product	Direct measurement.	0.0024	lb SO2/MMBtu	Based on AP-42, Table 1.4-2 (7/98), for uncontrolled combustion and assuming 1020 BTU/scf and 0.8 gr/Ccf sulfur content of natural gas.
C	CBB	0.044	lbs SO2/000 lbs product	Process emission based on 10% conversion of sulfite to SO2 within process. Emission allocated among stacks based on drying profile and stack exhaust rates.	0.0024	lb SO2/MMBtu	Based on AP-42, Table 1.4-2 (7/98), for uncontrolled combustion and assuming 1020 BTU/scf and 0.8 gr/Ccf sulfur content of natural gas.
C	CTQ	0.028	lbs SO2/000 lbs product	Process emission based on 10% conversion of sulfite to SO2 within process. Emission allocated among stacks based on drying profile and stack exhaust rates.	0.0024	lb SO2/MMBtu	Based on AP-42, Table 1.4-2 (7/98), for uncontrolled combustion and assuming 1020 BTU/scf and 0.8 gr/Ccf sulfur content of natural gas.
C	CTR	0.024	lbs SO2/000 lbs product	Process emission based on 10% conversion of sulfite to SO2 within process. Emission allocated among stacks based on drying profile and stack exhaust rates.	0.0024	lb SO2/MMBtu	Based on AP-42, Table 1.4-2 (7/98), for uncontrolled combustion and assuming 1020 BTU/scf and 0.8 gr/Ccf sulfur content of natural gas.
C	CTS	0.010	lbs SO2/000 lbs product	Process emission based on 10% conversion of sulfite to SO2 within process. Emission allocated among stacks based on drying profile and stack exhaust rates.	0.0024	lb SO2/MMBtu	Based on AP-42, Table 1.4-2 (7/98), for uncontrolled combustion and assuming 1020 BTU/scf and 0.8 gr/Ccf sulfur content of natural gas.
C	CTT	0.012	lbs SO2/000 lbs product	Process emission based on 10% conversion of sulfite to SO2 within process. Emission allocated among stacks based on drying profile and stack exhaust rates.	0.0024	lb SO2/MMBtu	Based on AP-42, Table 1.4-2 (7/98), for uncontrolled combustion and assuming 1020 BTU/scf and 0.8 gr/Ccf sulfur content of natural gas.
C	CNV	0.010	lbs SO2/000 lbs product	The sum of CNV, CNW, CTU, and CTZ assumed to be the same as the sum of HEB and HNL. Emissions allocated to specific stacks within the process is porportional to the drying profile and stack.	0.0024	lb SO2/MMBtu	Based on AP-42, Table 1.4-2 (7/98), for uncontrolled combustion and assuming 1020 BTU/scf and 0.8 gr/Ccf sulfur content of natural gas.
C	CNW	0.010	lbs SO2/000 lbs product	The sum of CNV, CNW, CTU, and CTZ assumed to be the same as the sum of HEB and HNL. Emissions allocated to specific stacks within the process is porportional to the drying profile and stack.	0.0024	lb SO2/MMBtu	Based on AP-42, Table 1.4-2 (7/98), for uncontrolled combustion and assuming 1020 BTU/scf and 0.8 gr/Ccf sulfur content of natural gas.
C	CTU	0.067	lbs SO2/000 lbs product	The sum of CNV, CNW, CTU, and CTZ assumed to be the same as the sum of HEB and HNL. Emissions allocated to specific stacks within the process is porportional to the drying profile and stack.	-	-	
C	CTZ	0.032	lbs SO2/000 lbs product	The sum of CNV, CNW, CTU, and CTZ assumed to be the same as the sum of HEB and HNL. Emissions allocated to specific stacks within the process is porportional to the drying profile and stack.	0.0024	lb SO2/MMBtu	Based on AP-42, Table 1.4-2 (7/98), for uncontrolled combustion and assuming 1020 BTU/scf and 0.8 gr/Ccf sulfur content of natural gas.

Table C-6
Sulfur Dioxide Emission Factors

Production Process	Stack Identification Code	Process Related Sulfur Dioxide Emissions			Combustion Related Sulfur Dioxide Emissions		
		Emission Factor	Emission Factor Units	Basis for Emission Factor	Annual Emissions		Basis for Combustion Emission Factor
C	TCD	0.119	lbs SO2/000 lbs product	Estimated 10% conversion of sulfite to SO2 within process. Emission allocated to stack with applied heat.	0.0024	lb SO2/MMBtu	Based on AP-42, Table 1.4-2 (7/98), for uncontrolled combustion and assuming 1020 BTU/scf and 0.8 gr/Ccf sulfur content of natural gas.
C	TAC	0.040	lbs SO2/000 lbs product	Estimated 10% conversion of sulfite to SO2 within process. Emission divided equally between TAC and TAH.	0.0024	lb SO2/MMBtu	Based on AP-42, Table 1.4-2 (7/98), for uncontrolled combustion and assuming 1020 BTU/scf and 0.8 gr/Ccf sulfur content of natural gas.
C	TAH	0.040	lbs SO2/000 lbs product	Estimated 10% conversion of sulfite to SO2 within process. Emission divided equally between TAC and TAH.	0.0024	lb SO2/MMBtu	Based on AP-42, Table 1.4-2 (7/98), for uncontrolled combustion and assuming 1020 BTU/scf and 0.8 gr/Ccf sulfur content of natural gas.
Plant	Heaters	-	NA	NA	0.0024	lb SO2/MMBtu	Based on AP-42, Table 1.4-2 (7/98), for uncontrolled combustion and assuming 1020 BTU/scf and 0.8 gr/Ccf sulfur content of natural gas.

Table C-7
Estimated Sulfur Dioxide Emissions

Production Process	Stack Identification Code	Process Emissions			Combustion Emissions Annual Emissions				Combined Hourly Emission Rate, lb/hr	Combined Annual Emissions, tpy
		Emission Factor	Emission Factor Units	Annual Operating	Emission Factor	Emission Factor Units	Operating Rate	Operating Units		
Boilers	Boiler 1	NA			Enforceable limit from PTC P-050301 (10/05)					
Boilers	Boiler 2									
Boilers	Boiler 3								1.90	
Boilers	Boilers 1 and 2								45.30	
Boilers	Boilers 1, 2, and 3									145.0
A	DHT	0.005	lbs SO2/000 lbs unit process throughput	91,980	0.0024	lb SO2/MMBtu	61,320	MMBtu	0.10	0.30
A	DHU	0.0050	lbs SO2/000 lbs unit process throughput	91,980	0.0024	lb SO2/MMBtu	61,320	MMBtu	0.10	0.30
A	DHZ	0.005	lbs SO2/000 lbs unit process throughput	183,960	0.0024	lb SO2/MMBtu	52,560	MMBtu	0.18	0.52
B	DUQ	0.005	lbs SO2/000 lbs unit process throughput	91,980	0.0024	lb SO2/MMBtu	61,320	MMBtu	0.10	0.30
B	DUT	0.005	lbs SO2/000 lbs unit process throughput	91,980	0.0024	lb SO2/MMBtu	61,320	MMBtu	0.10	0.30
B	DQA	0.005	lbs SO2/000 lbs unit process throughput	91,980	0.0024	lb SO2/MMBtu	61,320	MMBtu	0.10	0.30
B	DQB	0.005	lbs SO2/000 lbs unit process throughput	91,980	0.0024	lb SO2/MMBtu	61,320	MMBtu	0.10	0.30
B	DUV	0.005	lbs SO2/000 lbs unit process throughput	367,920	0.0024	lb SO2/MMBtu	105,120	MMBtu	0.36	1.05

Table C-7
Estimated Sulfur Dioxide Emissions

Production Process	Stack Identification Code	Process Emissions			Combustion Emissions Annual Emissions				Combined Hourly Emission Rate, lb/hr	Combined Annual Emissions, tpy
		Emission Factor	Emission Factor Units	Annual Operating	Emission Factor	Emission Factor Units	Operating Rate	Operating Units		
B	DSO	0.005	lbs SO2/000 lbs unit process throughput	45,990	-	-	-	-	0.04	0.11
C	ALB	0.011	lbs SO2/000 lbs product	16,057	-	-	-	-	0.03	0.08
C	ALQ	0.011	lbs SO2/000 lbs product	16,057	-	-	-	-	0.03	0.08
C	ALV	0.011	lbs SO2/000 lbs product	26,280	-	-	-	-	0.04	0.14
C	ALW	0.011	lbs SO2/000 lbs product	26,280	-	-	-	-	0.04	0.14
C	AEV	0.011	lbs SO2/000 lbs product	17,520	0.0024	lb SO2/MMBtu	28,908	MMBtu	0.04	0.13
C	AEW	0.011	lbs SO2/000 lbs product	17,520	-	-	-	-	0.03	0.09
C	CIR_RTC	0.110	lbs SO2/000 lbs product	74,460	-	-	-	-	1.32	4.10
C	CXX	0.058	lbs SO2/000 lbs product	43,800	0.0024	lb SO2/MMBtu	93,951	MMBtu	0.46	1.38
C	CYY	0.061	lbs SO2/000 lbs product	43,800	0.0024	lb SO2/MMBtu	65,919	MMBtu	0.48	1.42
C	CHX	0.000	lbs SO2/000 lbs product	15,698	0.0024	lb SO2/MMBtu	68,503	MMBtu	0.02	0.08

Table C-7
Estimated Sulfur Dioxide Emissions

Production Process	Stack Identification Code	Process Emissions			Combustion Emissions Annual Emissions				Combined Hourly Emission Rate, lb/hr	Combined Annual Emissions, tpy
		Emission Factor	Emission Factor Units	Annual Operating	Emission Factor	Emission Factor Units	Operating Rate	Operating Units		
C	CHY	0.019	lbs SO2/000 lbs product	15,698	0.0024	lb SO2/MMBtu	40,471	MMBtu	0.06	0.20
C	CHZ	0.026	lbs SO2/000 lbs product	15,698	0.0024	lb SO2/MMBtu	19,798	MMBtu	0.08	0.23
C	TEE	0.029	lbs SO2/000 lbs product	15,698	-	-	-	-	0.08	0.23
C	TEM	0.031	lbs SO2/000 lbs product	15,698	-	-	-	-	0.09	0.24
C	HEB	0.102	lbs SO2/000 lbs product	19,272	0.0024	lb SO2/MMBtu	94,433	MMBtu	0.38	1.10
C	HNL	0.017	lbs SO2/000 lbs product	19,272	0.0024	lb SO2/MMBtu	28,207	MMBtu	0.07	0.20
C	CBB	0.044	lbs SO2/000 lbs product	15,698	0.0024	lb SO2/MMBtu	13,140	MMBtu	0.09	0.36
C	CTQ	0.028	lbs SO2/000 lbs product	15,698	0.0024	lb SO2/MMBtu	35,097	MMBtu	0.07	0.27
C	CTR	0.024	lbs SO2/000 lbs product	15,698	0.0024	lb SO2/MMBtu	57,715	MMBtu	0.06	0.26
C	CTS	0.010	lbs SO2/000 lbs product	15,698	0.0024	lb SO2/MMBtu	76,931	MMBtu	0.04	0.17
C	CTT	0.012	lbs SO2/000 lbs product	15,698	0.0024	lb SO2/MMBtu	84,971	MMBtu	0.05	0.20
C	CNV	0.010	lbs SO2/000 lbs product	15,698	0.0024	lb SO2/MMBtu	105,120	MMBtu	0.06	0.21

Table C-7
Estimated Sulfur Dioxide Emissions

Production Process	Stack Identification Code	Process Emissions			Combustion Emissions Annual Emissions				Combined Hourly Emission Rate, lb/hr	Combined Annual Emissions, tpy
		Emission Factor	Emission Factor Units	Annual Operating	Emission Factor	Emission Factor Units	Operating Rate	Operating Units		
C	CNW	0.010	lbs SO2/000 lbs product	15,698	0.0024	lb SO2/MMBtu	105,120	MMBtu	0.06	0.21
C	CTU	0.067	lbs SO2/000 lbs product	15,698	-	-	-	-	0.19	0.52
C	CTZ	0.032	lbs SO2/000 lbs product	15,698	0.0024	lb SO2/MMBtu	94,608	MMBtu	0.11	0.36
C	TCD	0.119	lbs SO2/000 lbs product	8,760	0.0024	lb SO2/MMBtu	17,520	MMBtu	0.12	0.54
C	TAC	0.040	lbs SO2/000 lbs product	3,504	0.0024	lb SO2/MMBtu	10,950	MMBtu	0.02	0.08
C	TAH	0.040	lbs SO2/000 lbs product	3,504	0.0024	lb SO2/MMBtu	10,950	MMBtu	0.02	0.08
Plant	Heaters	0.00000	NA	-	0.0024	lb SO2/MMBtu	679,561	MMBtu	0.19	0.82

Table C-8
Particulate Matter Emission Factors

Production Process	Stack Identification Code	Hourly Emissions			Annual Emissions		
		Emission Factor	Emission Factor Units	Basis for Factor	Emission Factor	Emission Factor Units	Basis for Factor
Boilers	Boiler 1	0.083	lb/000 lbs steam	#6 oil firsing with scrubber control	0.083	lb/000 lbs steam	#6 oil firsing with scrubber control
Boilers	Boiler 2	0.084	lb/000 lbs steam	#6 oil firsing with scrubber control	0.084	lb/000 lbs steam	#6 oil firsing with scrubber control
Boilers	Boiler 3	0.030	lb/000 lbs steam	#2 oil firing, uncontrolled	0.013	lb/000 lbs steam	weighted averate for #2 oil and natural gas firing
Boilers	Boilers 1 and 2						
Boilers	Boilers 1, 2, and 3						
A	DHQ	0.016	lb PM/ 000 lb unit process throughput	Based on June 2006 Method 201/202 PM-10 testing. Filterable PM10 assumed to be 58.1% of Filterable PM, based on fractioning from emission measurements of stack DUT.	0.016	lb PM/ 000 lb unit process throughput	Same as hourly emission factor.
A	DHT	0.141	lb PM/ 000 lb unit process throughput	Assumed to be the same as DUT	0.141	lb PM/ 000 lb unit process throughput	Same as hourly emission factor.
A	DHU	0.141	lb PM/ 000 lb unit process throughput	Assumed to be the same as DUT	0.141	lb PM/ 000 lb unit process throughput	Same as hourly emission factor.
A	DHZ	0.116	lb PM/ 000 lb unit process throughput	Direct measurement (EPA Method 5).	0.116	lb PM/ 000 lb unit process throughput	Same as hourly emission factor.
A	DKV	0.161	lb PM/ 000 lb unit process throughput	Direct measurement of solid fraction (Oregon Method 8). Condensible emission assumed to be negligible.	0.161	lb PM/ 000 lb unit process throughput	Same as hourly emission factor.
A	DKW	0.005	lb PM/ 000 lb process output	Assumed to be the same as DUY	0.005	lb TSP/ 000 lb process throughput (including mixback)	Same as hourly emission factor.
B	DXS	0.0090	lb PM/ 000 lb unit process throughput	Assumed to be the same as DPY	0.009	lb PM/ 000 lb unit process throughput	Same as hourly emission factor.
B	DUO	0.0090	lb PM/ 000 lb unit process throughput	Assumed to be the same as DPY	0.009	lb PM/ 000 lb unit process throughput	Same as hourly emission factor.
B	DPY	0.0090	lb PM/ 000 lb unit process throughput	Direct measurement of solid fraction (Oregon Method 8). Total condensible emission for stacks DXS, DUO, DPY, and DPZ assumed to be the same as stack DHQ; condensible emissions divided equally among these four	0.009	lb PM/ 000 lb unit process throughput	Same as hourly emission factor.
B	DPZ	0.0090	lb PM/ 000 lb unit process throughput	Assumed to be the same as DPY	0.009	lb PM/ 000 lb unit process throughput	Same as hourly emission factor.
B	DUQ	0.141	lb PM/ 000 lb unit process throughput	Assumed to be the same as DUT	0.141	lb PM/ 000 lb unit process throughput	Same as hourly emission factor.
B	DUT	0.141	lb PM/ 000 lb unit process throughput	Direct measurement (EPA Method 5). Emission factor assumed to be the higher of two seperate Method 5 emission measurements from this stack.	0.141	lb PM/ 000 lb unit process throughput	Same as hourly emission factor.
B	DQA	0.141	lb PM/ 000 lb unit process throughput	Assumed to be the same as DUT	0.141	lb PM/ 000 lb unit process throughput	Same as hourly emission factor.
B	DQB	0.141	lb PM/ 000 lb unit process throughput	Assumed to be the same as DUT	0.141	lb PM/ 000 lb unit process throughput	Same as hourly emission factor.
B	DUV	0.029	lb PM/ 000 lb unit process throughput	Based on Nov. 2011 Methods 201A & 202 testing of Stack DUV for coarse PM, PM-10 and CPM. Emission factor is 125% of measured emission rate.	0.029	lb PM/ 000 lb unit process throughput	Same as hourly emission factor.

Table C-8
Particulate Matter Emission Factors

Production Process	Stack Identification Code	Hourly Emissions			Annual Emissions		
		Emission Factor	Emission Factor Units	Basis for Factor	Emission Factor	Emission Factor Units	Basis for Factor
B	DSO	0.053	lb PM/ 000 lb unit process throughput	Direct measurement of solid particulates via Oregon Method 8; condensibles assumed to be the same as DHZ.	0.053	lb PM/ 000 lb unit process throughput	Same as hourly emission factor.
B	DSK	0.015	lb PM/ 000 lb unit process throughput	Solid particulates assumed to be the same as DSO. Condensible emission assumed to be negligible.	0.015	lb PM/ 000 lb unit process throughput	Same as hourly emission factor.
B	DUY	0.005	lb PM/ 000 lb unit process throughput	Direct measurement of solid fraction (Oregon Method 8). Condensible emission assumed to be negligible.	0.005	lb PM/ 000 lb unit process throughput	Same as hourly emission factor.
B	DUZ	0.005	lb PM-10/ 000 lb unit process throughput	Assumed to be the same as DUY	0.005	lb PM/ 000 lb unit process throughput	Same as hourly emission factor.
B	DRY	0.008	lb PM/ 000 lb unit process throughput	Based on direct measurement of solid fraction (Oregon Method 8) from former stack DUU. Condensible emission assumed to be negligible.	0.008	lb PM/ 000 lb unit process throughput	Same as hourly emission factor.
C	ALB	0.085	lb PM/ 000 lb unit process output	Direct measurement of solid fraction (Oregon Method 8). Overall dryer condensibles assumed to be the same as the average of those measured in DUT and DHZ.; one-half allocated to each of the first two stacks from this dryer.	0.085	lb PM/ 000 lb unit process throughput	Same as hourly emission factor.
C	ALQ	0.045	lb PM/ 000 lb unit process throughput	Direct measurement of solid fraction (Oregon Method 8). Overall dryer condensibles assumed to be the same as the average of those measured in DUT and DHZ.; one-half allocated to each of the first two stacks from this dryer.	0.045	lb PM/ 000 lb unit process throughput	Same as hourly emission factor.
C	ALT	0.008	lb PM/ 000 lb unit process throughput	Direct measurement of solid fraction (Oregon Method 8). Condensible emission assumed to be negligible.	0.008	lb PM/ 000 lb unit process throughput	Same as hourly emission factor.
C	ALY	0.003	lb PM/ 000 lb unit process throughput	Assumed to be the same as CHV	0.003	lb PM/ 000 lb unit process throughput	Same as hourly emission factor.
C	ALV	0.085	lb PM/ 000 lb process throughput	Assumed to be the same as ALB	0.085	lb PM/ 000 lb unit process throughput	Same as hourly emission factor.
C	ALW	0.045	lb PM/ 000 lb unit process throughput	Assumed to be the same as ALQ	0.045	lb PM/ 000 lb unit process throughput	Same as hourly emission factor.
C	ALX	0.008	lb PM/ 000 lb unit process throughput	Assumed to be the same as ALT	0.008	lb PM/ 000 lb unit process throughput	Same as hourly emission factor.
C	AEV	0.085	lb PM/ 000 lb unit process throughput	Assumed to be the same as ALB.	0.085	lb PM/ 000 lb unit process throughput	Same as hourly emission factor.
C	AEW	0.053	lb PM/ 000 lb unit process throughput	Assumed to be the same as the sum of ALT and ALQ.	0.053	lb PM/ 000 lb unit process throughput	Same as hourly emission factor.
C	AGQ	0.003	lb PM/ 000 lb unit process throughput	Assumed to be the same as CHV	0.003	lb PM/ 000 lb unit process throughput	Same as hourly emission factor.
C	CIR_RTC	0.046	lb PM/ 000 lb unit process throughput	Based on Nov. 2011 testing of Stack CIR_RTC for PM and CPM. Emission factor is 25% larger than measured emission.	0.046	lb PM/ 000 lb unit process throughput	Same as hourly emission factor.
C	CHV	0.003	lb PM/ 000 lb unit process throughput	Direct measurement of solid fraction (Oregon Method 8). Condensible emission assumed to be negligible.	0.003	lb PM/ 000 lb unit process throughput	Same as hourly emission factor.
C	CXX	0.450	lb PM/ 000 lb unit process throughput	Direct measurement (EPA Method 5).	0.450	lb PM/ 000 lb unit process throughput	Same as hourly emission factor.

Table C-8
Particulate Matter Emission Factors

Production Process	Stack Identification Code	Hourly Emissions			Annual Emissions		
		Emission Factor	Emission Factor Units	Basis for Factor	Emission Factor	Emission Factor Units	Basis for Factor
C	CYY	0.380	lb PM/ 000 lb unit process throughput	Direct measurement (EPA Method 5).	0.380	lb PM/ 000 lb unit process throughput	Same as hourly emission factor.
C	CHX	0.253	lb PM/ 000 lb unit process throughput	The sum of filterable PM emissins from Stacks CHX, CHY, CHZ, TEE, and TEM assumed to be the same the sum of filterable PM emissions from Stacks HEB and HNL. Within the production line filterable PM emissions allocated to stack using the same emissions as was observed for filterable PM-10 emissions in November 2011 stack testing. Condensible emissions derived from November 2011 stack testing of stacks CHX, CHY, CHZ, and TEE. Stack TEM assumed to be the same as TEE. Emission factors used are 125% of the referenced measured emission rates.	0.253	lb PM/ 000 lb unit process throughput	Same as hourly emission factor.
C	CHY	0.088	lb PM/ 000 lb unit process throughput		0.088	lb PM/ 000 lb unit process throughput	Same as hourly emission factor.
C	CHZ	0.064	lb PM/ 000 lb unit process throughput		0.064	lb PM/ 000 lb unit process throughput	Same as hourly emission factor.
C	TEE	0.021	lb PM/ 000 lb unit process throughput		0.021	lb PM/ 000 lb unit process throughput	Same as hourly emission factor.
C	TEM	0.021	lb PM/ 000 lb unit process throughput		0.021	lb PM/ 000 lb unit process throughput	Same as hourly emission factor.
C	HEB	0.739	lb PM/ 000 lb unit process throughput	Direct measurement (EPA Method 5).	0.739	lb PM/ 000 lb unit process throughput	Same as hourly emission factor.
C	HNL	0.176	lb PM/ 000 lb unit process throughput	Direct measurement (EPA Method 5).	0.176	lb PM/ 000 lb unit process throughput	Same as hourly emission factor.
C	CBB	0.121	lb PM/ 000 lb unit process throughput	Total production line emission factors for filterable PM for stacks CBB, CTQ, CTR, CTS and CTT are assumed to be the same as for the production line served by stacks HEB and HNL. Total production line emission factors for condensable PM for stacks CBB, CTQ, CTR, CTS and CTT are assumed to be the same as was measured during condensable emissions testing of Stacks CHX, CHY, CHZ, TEE, and TEM in November 2011. Within the production line filterable and condensable PM emissions are allocated to individual stacks using the same emissions profiles for these parameters as was observed in November 2011 stack testing of stacks CHX, CHY, CHZ, TEE, and TEM. Emission factors used are 125% of the referenced measured emission rates. See *"Review of Results of November 2011 Source Testing at Blackfoot Facility of Basic American Foods and Development of Revised Emission Factors"* for details.	0.121	lb PM/ 000 lb unit process throughput	Same as hourly emission factor.
C	CTQ	0.114	lb PM/ 000 lb unit process throughput		0.114	lb PM/ 000 lb unit process throughput	Same as hourly emission factor.
C	CTR	0.119	lb PM/ 000 lb unit process throughput		0.119	lb PM/ 000 lb unit process throughput	Same as hourly emission factor.
C	CTS	0.045	lb PM/ 000 lb unit process throughput		0.045	lb PM/ 000 lb unit process throughput	Same as hourly emission factor.
C	CTT	0.048	lb PM/ 000 lb unit process throughput		0.048	lb PM/ 000 lb unit process throughput	Same as hourly emission factor.
C	CNV	0.075	lb PM/ 000 lb unit process throughput	Based on process similarity, total production line emission factors for filterable PM and condensible particulate matter (CPM) for stacks CNV,	0.075	lb PM/ 000 lb unit process throughput	Same as hourly emission factor.

Table C-8
Particulate Matter Emission Factors

Production Process	Stack Identification Code	Hourly Emissions			Annual Emissions		
		Emission Factor	Emission Factor Units	Basis for Factor	Emission Factor	Emission Factor Units	Basis for Factor
C	CNW	0.078	lb PM/ 000 lb unit process throughput	CNW, CTU, CTQ,CTR, CTS and CTT are assumed to be the same as for the production line served by stacks HEB and HNL. Filterable PM and CPM emissions allocated to individuall stacks based on the emissions profile for filterable PM and CPM as a function of product drying observed during Nov. 2011 stack testing of stacks CHX, CHY, CHZ, TEE, and TEM. See *"Review of Results of November 2011 Source Testing at Blackfoot Facility of Basic American Foods and Development of Revised Emission Factors"* for details.	0.078	lb PM/ 000 lb unit process throughput	Same as hourly emission factor.
C	CTU	0.572	lb PM/ 000 lb unit process throughput		0.572	lb PM/ 000 lb unit process throughput	Same as hourly emission factor.
C	CTZ	0.189	lb PM/ 000 lb unit process throughput		0.189	lb PM/ 000 lb unit process throughput	Same as hourly emission factor.
C	TCD	0.0342	lb PM/ 000 lb unit process throughput	PM Emission factor for bean drying at Plover facility divided equally between stacks TCD and TCO.	0.034	lb PM/ 000 lb unit process throughput	Same as hourly emission factor.
C	TCO	0.0342	lb PM/ 000 lb unit process throughput	PM Emission factor for bean drying at Plover facility divided equally between stacks TCD and TCO.	0.034	lb PM/ 000 lb unit process throughput	Same as hourly emission factor.
C	TAC	0.458	lb PM/ 000 lb unit process throughput	The sum of TAC and TAH assumed to be the same as the sum of HEB and HNL. Emissions divided equally between stacks.	0.458	lb PM/ 000 lb unit process throughput	Same as hourly emission factor.
C	TAH	0.458	lb PM/ 000 lb unit process throughput	The sum of TAC and TAH assumed to be the same as the sum of HEB and HNL. Emissions divided equally between stacks.	0.458	lb PM/ 000 lb unit process throughput	Same as hourly emission factor.
C	EUW	0.000	lb PM/ 000 lb unit process throughput	Direct measurement of solid fraction (Oregon Method 8). Condensible emission assumed to be negligible.	0.000	lb PM/ 000 lb unit process throughput	Same as hourly emission factor.
C	SUF	0.000	lb PM/ 000 lb unit process throughput	Assumed to be the same as EUW.	0.000	lb PM/ 000 lb unit process throughput	Same as hourly emission factor.
C	DSX	0.016	lb PM/ 000 lb unit process throughput	Based on direct measurement of solid fraction (Oregon Method 8) from former stack CHI. Condensible emission assumed to be negligible.	0.016	lb PM/ 000 lb unit process throughput	Same as hourly emission factor.
C	EGS	0.003	lb PM/ 000 lb unit process throughput	Assumed to be the same as EGT.	0.003	lb PM/ 000 lb unit process throughput	Same as hourly emission factor.
C	EGT	0.003	lb PM/ 000 lb unit process throughput	Direct measurement of solid fraction (Oregon Method 8). Condensible emission assumed to be negligible.	0.003	lb PM/ 000 lb unit process throughput	Same as hourly emission factor.
C	FIF	0.038	lb PM/ 000 lb unit process throughput	Derived from AP-42, Table 9.9.1-1 (5/98) for Internal Vibrating Grain Cleaning with cyclone control. Filterable PM emission factor is 0.075 lb/ton of grain processed.	0.038	lb PM/ 000 lb unit process throughput	Same as hourly emission factor.
Plant	Heaters	0.007	lb PM/MM Btu	AP-42 Table 1.4-2. On an annual basis, firing assumed to occur at a maximum of 50% of burner capacity.	0.007	lb PM/MM Btu	Same as hourly emission factor.
Plant	Fugitive Dust	5.200	lb PM/hr	AP-42 Section 13.2. Emission listed is for dry conditions, appropriate for daily emission rates.	5.200	lb PM/hr	Same as hourly emission factor.

Table C-9
Estimated Particulate Matter Emissions

Production Process	Stack Identification Code	Annual Emissions				
		Emission Factor	Emission Factor Units	Operating Rate	Operating Units	Annual Emissions, tpy
Boilers	Boiler 1	0.083	lb/000 lbs steam	230,966	MM lbs steam	9.56
Boilers	Boiler 2	0.084	lb/000 lbs steam	282,292	MM lbs steam	11.80
Boilers	Boiler 3	0.013	lb/000 lbs steam	262,800	MM lbs steam	1.71
Boilers	Boilers 1 and 2					0.0
Boilers	Boilers 1, 2, and 3					0.0
A	DHQ	0.016	lb PM/ 000 lb unit process throughput	183,960	000 lbs throughput/yr	1.44
A	DHT	0.141	lb PM/ 000 lb unit process throughput	91,980	000 lbs throughput/yr	6.48
A	DHU	0.141	lb PM/ 000 lb unit process throughput	91,980	000 lbs throughput/yr	6.48
A	DHZ	0.116	lb PM/ 000 lb unit process throughput	183,960	000 lbs throughput/yr	10.67
A	DKV	0.161	lb PM/ 000 lb unit process throughput	22,995	000 lbs throughput/yr	1.85
A	DKW	0.005	lb TSP/ 000 lb process throughput	22,995	000 lbs throughput/yr	0.06
B	DXS	0.009	lb PM/ 000 lb unit process throughput	183,960	000 lbs throughput/yr	0.83
B	DUO	0.009	lb PM/ 000 lb unit process throughput	183,960	000 lbs throughput/yr	0.83
B	DPY	0.009	lb PM/ 000 lb unit process throughput	183,960	000 lbs throughput/yr	0.83
B	DPZ	0.009	lb PM/ 000 lb unit process throughput	183,960	000 lbs throughput/yr	0.83
B	DUQ	0.141	lb PM/ 000 lb unit process throughput	91,980	000 lbs throughput/yr	6.48
B	DUT	0.141	lb PM/ 000 lb unit process throughput	91,980	000 lbs throughput/yr	6.48
B	DQA	0.141	lb PM/ 000 lb unit process throughput	91,980	000 lbs throughput/yr	6.48
B	DQB	0.141	lb PM/ 000 lb unit process throughput	91,980	000 lbs throughput/yr	6.48
B	DUV	0.029	lb PM/ 000 lb unit process throughput	367,920	000 lbs throughput/yr	5.32
B	DSO	0.053	lb PM/ 000 lb unit process throughput	45,990	000 lbs throughput/yr	1.22
B	DSK	0.015	lb PM/ 000 lb unit process throughput	45,990	000 lbs throughput/yr	0.34
B	DUY	0.005	lb PM/ 000 lb unit process throughput	45,990	000 lbs throughput/yr	0.11
B	DUZ	0.005	lb PM/ 000 lb unit process throughput	45,990	000 lbs throughput/yr	0.11
B	DRY	0.008	lb PM/ 000 lb unit process throughput	45,990	000 lbs throughput/yr	0.18
C	ALB	0.085	lb PM/ 000 lb unit process throughput	16,057	000 lbs throughput/yr	0.68
C	ALQ	0.045	lb PM/ 000 lb unit process throughput	16,057	000 lbs throughput/yr	0.36
C	ALT	0.008	lb PM/ 000 lb unit process throughput	16,057	000 lbs throughput/yr	0.06

Table C-9
Estimated Particulate Matter Emissions

Production Process	Stack Identification Code	Annual Emissions				
		Emission Factor	Emission Factor Units	Operating Rate	Operating Units	Annual Emissions, tpy
C	ALY	0.003	lb PM/ 000 lb unit process throughput	16,057	000 lbs throughput/yr	0.02
C	ALV	0.085	lb PM/ 000 lb unit process throughput	26,280	000 lbs throughput/yr	1.12
C	ALW	0.045	lb PM/ 000 lb unit process throughput	26,280	000 lbs throughput/yr	0.59
C	ALX	0.008	lb PM/ 000 lb unit process throughput	26,280	000 lbs throughput/yr	0.11
C	AEV	0.085	lb PM/ 000 lb unit process throughput	17,520	000 lbs throughput/yr	0.74
C	AEW	0.053	lb PM/ 000 lb unit process throughput	17,520	000 lbs throughput/yr	0.46
C	AGQ	0.003	lb PM/ 000 lb unit process throughput	17,520	000 lbs throughput/yr	0.03
C	CIR_RTC	0.046	lb PM/ 000 lb unit process throughput	74,460	000 lbs throughput/yr	1.72
C	CHV	0.003	lb PM/ 000 lb unit process throughput	74,460	000 lbs throughput/yr	0.11
C	CXX	0.450	lb PM/ 000 lb unit process throughput	43,800	000 lbs throughput/yr	9.86
C	CYY	0.380	lb PM/ 000 lb unit process throughput	43,800	000 lbs throughput/yr	8.32
C	CHX	0.253	lb PM/ 000 lb unit process throughput	15,698	000 lbs throughput/yr	1.99
C	CHY	0.088	lb PM/ 000 lb unit process throughput	15,698	000 lbs throughput/yr	0.69
C	CHZ	0.064	lb PM/ 000 lb unit process throughput	15,698	000 lbs throughput/yr	0.50
C	TEE	0.021	lb PM/ 000 lb unit process throughput	15,698	000 lbs throughput/yr	0.17
C	TEM	0.021	lb PM/ 000 lb unit process throughput	15,698	000 lbs throughput/yr	0.17
C	HEB	0.739	lb PM/ 000 lb unit process throughput	19,272	000 lbs throughput/yr	7.12
C	HNL	0.176	lb PM/ 000 lb unit process throughput	19,272	000 lbs throughput/yr	1.70
C	CBB	0.121	lb PM/ 000 lb unit process throughput	15,698	000 lbs throughput/yr	0.95
C	CTQ	0.114	lb PM/ 000 lb unit process throughput	15,698	000 lbs throughput/yr	0.90
C	CTR	0.119	lb PM/ 000 lb unit process throughput	15,698	000 lbs throughput/yr	0.94
C	CTS	0.045	lb PM/ 000 lb unit process throughput	15,698	000 lbs throughput/yr	0.35
C	CTT	0.048	lb PM/ 000 lb unit process throughput	15,698	000 lbs throughput/yr	0.38
C	CNV	0.075	lb PM/ 000 lb unit process throughput	15,698	000 lbs throughput/yr	0.59
C	CNW	0.078	lb PM/ 000 lb unit process throughput	15,698	000 lbs throughput/yr	0.61
C	CTU	0.572	lb PM/ 000 lb unit process throughput	15,698	000 lbs throughput/yr	4.49

Table C-9
Estimated Particulate Matter Emissions

Production Process	Stack Identification Code	Annual Emissions				
		Emission Factor	Emission Factor Units	Operating Rate	Operating Units	Annual Emissions, tpy
C	CTZ	0.189	lb PM/ 000 lb unit process throughput	15,698	000 lbs throughput/yr	1.49
C	TCD	0.034	lb PM/ 000 lb unit process throughput	8,760	000 lbs throughput/yr	0.15
C	TCO	0.034	lb PM/ 000 lb unit process throughput	8,760	000 lbs throughput/yr	0.15
C	TAC	0.458	lb PM/ 000 lb unit process throughput	3,504	000 lbs throughput/yr	0.80
C	TAH	0.458	lb PM/ 000 lb unit process throughput	3,504	000 lbs throughput/yr	0.80
C	EUW	0.000	lb PM/ 000 lb unit process throughput	376,680	000 lbs throughput/yr	0.02
C	SUF	0.000	lb PM/ 000 lb unit process throughput	376,680	000 lbs throughput/yr	0.02
C	DSX	0.016	lb PM/ 000 lb unit process throughput	8,760	000 lbs throughput/yr	0.07
C	EGS	0.003	lb PM/ 000 lb unit process throughput	55,684	000 lbs throughput/yr	0.08
C	EGT	0.003	lb PM/ 000 lb unit process throughput	55,684	000 lbs throughput/yr	0.08
C	FIF	0.038	lb PM/ 000 lb unit process throughput	6,899	000 lbs throughput/yr	0.13
Plant	Heaters	0.0075	lb PM/MM Btu	339,781	MMBtu/yr	1.27
Plant	Fugitive Dust	5.2	lb PM/hr	7,358	hrs/yr	4.78

Note: Fugitive Dust annual hours adjusted to incorporate net effects of precipitation corre

Table C-10
PM-10 Emission Factors

Production Process	Stack Identification Code	Hourly Emissions			Annual Emissions		
		Emission Factor	Emission Factor Units	Basis for Factor	Emission Factor	Emission Factor Units	Basis for Factor
Boilers	Boiler 1	*Enforceable limit from PTC P-050301 (10/05)*					
Boilers	Boiler 2						
Boilers	Boiler 3						
Boilers	Boilers 1 and 2						
Boilers	Boilers 1, 2, and 3						
A	DHQ	0.015	lb PM-10/ 000 lb unit process throughput	Based on June 2006 Method 201/202 PM-10 testing.	0.015	lb PM-10/ 000 lb unit process throughput	Same as hourly emission factor.
A	DHT	0.110	lb PM-10/ 000 lb unit process throughput	Assumed to be the same as DUT	0.110	lb PM-10/ 000 lb unit process throughput	Same as hourly emission factor.
A	DHU	0.110	lb PM-10/ 000 lb unit process throughput	Assumed to be the same as DUT	0.110	lb PM-10/ 000 lb unit process throughput	Same as hourly emission factor.
A	DHZ	0.083	lb PM-10/ 000 lb unit process throughput	Derived from TSP emission factor for this stack. All condensible TSP emissions assumed to be PM-10. 58.1% of solid TSP assumed to be PM-10 as measured in Method 201 test of DUT.	0.083	lb PM-10/ 000 lb unit process throughput	Same as hourly emission factor.
A	DKV	0.094	lb PM-10/ 000 lb unit process throughput	Derived from TSP emission factor for this stack. 58.1% of solid TSP emissions assumed to be PM-10 as measured in Method 201 test of DUT. There are no condensible emissions.	0.094	lb PM-10/ 000 lb unit process throughput	Same as hourly emission factor.
A	DKW	0.003	lb TSP/ 000 lb process throughput (including mixback)	Assumed to be the same as DUY	0.003	lb TSP/ 000 lb process throughput (including mixback)	Same as hourly emission factor.
B	DXS	0.0082	lb PM-10/ 000 lb unit process throughput	Assumed to be the same as DPY	0.008	lb PM-10/ 000 lb unit process throughput	Same as hourly emission factor.
B	DUO	0.0082	lb PM-10/ 000 lb unit process throughput	Assumed to be the same as DPY	0.008	lb PM-10/ 000 lb unit process throughput	Same as hourly emission factor.
B	DPY	0.0082	lb PM-10/ 000 lb unit process throughput	PM-10 assumed to be 58.1% of TSP emissions. This fraction is the same as the fraction of solid PM that is PM-10 measured in Stack DUT. Total condensible emission for stacks DXS, DUO, DPY, and DPZ assumed to be the same as stack DHQ; condensible emissions divided equally among these four stacks.	0.008	lb PM-10/ 000 lb unit process throughput	Same as hourly emission factor.
B	DPZ	0.0082	lb PM-10/ 000 lb unit process throughput	Assumed to be the same as DPY	0.008	lb PM-10/ 000 lb unit process throughput	Same as hourly emission factor.

Table C-10
PM-10 Emission Factors

Production Process	Stack Identification Code	Hourly Emissions			Annual Emissions		
		Emission Factor	Emission Factor Units	Basis for Factor	Emission Factor	Emission Factor Units	Basis for Factor
B	DUQ	0.110	lb PM-10/ 000 lb unit process throughput	Assumed to be the same as DUT	0.110	lb PM-10/ 000 lb unit process throughput	Same as hourly emission factor.
B	DUT	0.110	lb PM-10/ 000 lb unit process throughput	Derived from TSP emission factor for this stack. All condensible TSP emissions assumed to be PM-10. 58.1% of solid TSP assumed to be PM-10 as measured in Method 201 test of DUT.	0.110	lb PM-10/ 000 lb unit process throughput	Same as hourly emission factor.
B	DQA	0.110	lb PM-10/ 000 lb unit process throughput	Assumed to be the same as DUT	0.110	lb PM-10/ 000 lb unit process throughput	Same as hourly emission factor.
B	DQB	0.110	lb PM-10/ 000 lb unit process throughput	Assumed to be the same as DUT	0.110	lb PM-10/ 000 lb unit process throughput	Same as hourly emission factor.
B	DUV	0.019	lb PM-10/ 000 lb unit process throughput	Based on Nov. 2011 testing of Stack DUV for PM-10. Emission factor is 125% of measured emission rate.	0.019	lb PM-10/ 000 lb unit process throughput	Same as hourly emission factor.
B	DSO	0.046	lb PM-10/ 000 lb unit process throughput	Derived from TSP emission factor for this stack. 58.1% of solid TSP emissions assumed to be PM-10 as measured in Method 201 test of DUT. There are no condensible emissions.	0.046	lb PM-10/ 000 lb unit process throughput	Same as hourly emission factor.
B	DSK	0.008	lb PM-10/ 000 lb unit process throughput	Derived from TSP emission factor for this stack. 58.1% of solid TSP emissions assumed to be PM-10 as measured in Method 201 test of DUT. There are no condensible emissions.	0.008	lb PM-10/ 000 lb unit process throughput	Same as hourly emission factor.
B	DUY	0.003	lb PM-10/ 000 lb unit process throughput	Derived from TSP emission factor for this stack. 58.1% of solid TSP emissions assumed to be PM-10 as measured in Method 201 test of DUT. There are no condensible emissions.	0.003	lb PM-10/ 000 lb unit process throughput	Same as hourly emission factor.
B	DUZ	0.003	lb PM-10/ 000 lb unit process throughput	Assumed to be the same as DUY	0.003	lb PM-10/ 000 lb unit process throughput	Same as hourly emission factor.
B	DRY	0.004	lb PM-10/ 000 lb unit process throughput	Derived from TSP emission factor for this stack. 58.1% of solid TSP emissions assumed to be PM-10 as measured in Method 201 test of DUT. There are no condensible emissions.	0.004	lb PM-10/ 000 lb unit process throughput	Same as hourly emission factor.
C	ALB	0.055	lb PM-10/ 000 lb unit process throughput	Derived from TSP emission factors for this stack. All condensible TSP emissions assumed to be PM-10. 50.0% of solid TSP emissions assumed to be PM-10, based on AP-42 Table 9.9.1-2, Note g.	0.055	lb PM-10/ 000 lb unit process throughput	Same as hourly emission factor.
C	ALQ	0.035	lb PM-10/ 000 lb unit process throughput	Derived from TSP emission factors for this stack. 50.0% of solid TSP emissions assumed to be PM-10, based on AP-42 Table 9.9.1-2, Note g. There are no condensible emissions.	0.035	lb PM-10/ 000 lb unit process throughput	Same as hourly emission factor.
C	ALT	0.004	lb PM-10/ 000 lb unit process throughput	Derived from TSP emission factors for this stack. All condensible TSP emissions assumed to be PM-10. 50.0% of solid TSP emissions assumed to be PM-10, based on AP-42 Table 9.9.1-2, Note g.	0.004	lb PM-10/ 000 lb unit process throughput	Same as hourly emission factor.

Table C-10
PM-10 Emission Factors

Production Process	Stack Identification Code	Hourly Emissions			Annual Emissions		
		Emission Factor	Emission Factor Units	Basis for Factor	Emission Factor	Emission Factor Units	Basis for Factor
C	ALY	0.001	lb PM-10/ 000 lb unit process throughput	Assumed to be the same as the D-1 Kice system. This is an probably an overestimate since this process only scalps oversize product.	0.001	lb PM-10/ 000 lb unit process throughput	Same as hourly emission factor.
C	ALV	0.055	lb PM-10/ 000 lb unit process throughput	Assumed to be the same as ALB	0.055	lb PM-10/ 000 lb unit process throughput	Same as hourly emission factor.
C	ALW	0.035	lb PM-10/ 000 lb unit process throughput	Assumed to be the same as ALQ	0.035	lb PM-10/ 000 lb unit process throughput	Same as hourly emission factor.
C	ALX	0.004	lb PM-10/ 000 lb unit process throughput	Assumed to be the same as ALT	0.004	lb PM-10/ 000 lb unit process throughput	Same as hourly emission factor.
C	AEV	0.055	lb PM-10/ 000 lb unit process throughput	Assumed to be the same as ALB.	0.055	lb PM-10/ 000 lb unit process throughput	Same as hourly emission factor.
C	AEW	0.039	lb PM-10/ 000 lb unit process throughput	Assumed to be the same as the sum of ALT and ALQ.	0.039	lb PM-10/ 000 lb unit process throughput	Same as hourly emission factor.
C	AGQ	0.001	lb PM-10/ 000 lb unit process throughput	Assumed to be the same as CHV	0.001	lb PM-10/ 000 lb unit process throughput	Same as hourly emission factor.
C	CIR_RTC	0.046	lb PM-10/ 000 lb unit process throughput	Based on Nov. 2011 testing of Stack CIR_RTC for PM and CPM. Because this is a scrubbed stack, all PM assumed to be PM-10. Emission factor is 25% larger than measured emission.	0.046	lb PM-10/ 000 lb unit process throughput	Same as hourly emission factor.
C	CHV	0.001	lb PM-10/ 000 lb unit process throughput	Derived from TSP emission factors for this stack. 50.0% of solid TSP emissions assumed to be PM-10, based on AP-42 Table 9.9.1-2, Note g. There are no condensible emissions.	0.001	lb PM-10/ 000 lb unit process throughput	Same as hourly emission factor.
C	CXX	0.343	lb PM-10/ 000 lb unit process throughput	Derived from Oct 2000 measurements of TSP (Method 5). All condensible TSP emissions assumed to be PM-10. 58.1% of solid TSP assumed to be PM 10 as measured in Method 201 test of DUT.	0.343	lb PM-10/ 000 lb unit process throughput	Same as hourly emission factor.
C	CYY	0.327	lb PM-10/ 000 lb unit process throughput	Derived from Oct 2000 measurements of TSP (Method 5). All condensible TSP emissions assumed to be PM-10. 58.1% of solid TSP assumed to be PM 10 as measured in Method 201 test of DUT.	0.327	lb PM-10/ 000 lb unit process throughput	Same as hourly emission factor.
C	CHX	0.190	lb PM-10/ 000 lb unit process throughput	Derived from November 2011 stack testing of stacks CHX, CHY, CHZ, and TEE for PM-10 (PM for stack TEE). Stack TEM assumed to be the same as TEE. Emission factors are 25% greater than measured emissions. See *"Review of Results of November 2011 Source Testing at Blackfoot Facility of Basic American Foods and Development of Revised Emission Factors"* for details.	0.190	lb PM-10/ 000 lb unit process throughput	Same as hourly emission factor.
C	CHY	0.063	lb PM-10/ 000 lb unit process throughput		0.063	lb PM-10/ 000 lb unit process throughput	Same as hourly emission factor.
C	CHZ	0.033	lb PM-10/ 000 lb unit process throughput		0.033	lb PM-10/ 000 lb unit process throughput	Same as hourly emission factor.
C	TEE	0.009	lb PM-10/ 000 lb unit process throughput		0.009	lb PM-10/ 000 lb unit process throughput	Same as hourly emission factor.
C	TEM	0.009	lb PM-10/ 000 lb unit process throughput		0.009	lb PM-10/ 000 lb unit process throughput	Same as hourly emission factor.

Table C-10
PM-10 Emission Factors

Production Process	Stack Identification Code	Hourly Emissions			Annual Emissions		
		Emission Factor	Emission Factor Units	Basis for Factor	Emission Factor	Emission Factor Units	Basis for Factor
C	HEB	0.640	lb PM-10/ 000 lb unit process throughput	Direct measurement of TSP and PM-10 from HEB and HNL stacks, Oct 2000. Because PM-10 significantly greater than TSP, PM-10 estimated by assuming 33% of solid TSP is PM-10 and all condensible TSP is PM-10.	0.640	lb PM-10/ 000 lb unit process throughput	Same as hourly emission factor.
C	HNL	0.142	lb PM-10/ 000 lb unit process throughput		0.142	lb PM-10/ 000 lb unit process throughput	Same as hourly emission factor.
C	CBB	0.101	lb PM-10/ 000 lb unit process throughput	Based on process similarity, total production line emission factors for filterable PM-10 and condensable particulate matter (CPM) for stacks CBB, CTQ, CTR, CTS and CTT are assumed to be the same as the total production line emission factors developed for stacks CHX, CHY, CHZ, and TEE and TEM from Nov. 2011 emissions test results from those stacks. Filterable PM-10 and CPM emissions allocated to individual stacks based on the emissions profile for filterable PM and CPM as a function of product drying observed during Nov. 2011 stack testing of stacks CHX, CHY, CHZ, TEE, and TEM. See *"Review of Results of November 2011 Source Testing at Blackfoot Facility of Basic American Foods and Development of Revised Emission Factors"* for details.	0.101	lb PM-10/ 000 lb unit process throughput	Same as hourly emission factor.
C	CTQ	0.081	lb PM-10/ 000 lb unit process throughput		0.081	lb PM-10/ 000 lb unit process throughput	Same as hourly emission factor.
C	CTR	0.078	lb PM-10/ 000 lb unit process throughput		0.078	lb PM-10/ 000 lb unit process throughput	Same as hourly emission factor.
C	CTS	0.024	AP-42, Table 1.4-2 for uncontrolled burners and assuming 1020 Btu/scf		0.024	lb PM-10/ 000 lb unit process throughput	Same as hourly emission factor.
C	CTT	0.020	lb PM-10/ 000 lb unit process throughput		0.020	lb PM-10/ 000 lb unit process throughput	Same as hourly emission factor.
C	CNV	0.074	lb PM-10/ 000 lb unit process throughput	Based on process similarity, total production line emission factors for filterable PM-10 and condensible particulate matter (CPM) for stacks CNV, CNW, CTU, CTQ,CTR, CTS and CTT are assumed to be the same as for the production line served by stacks HEB and HNL. Filterable PM-10 and CPM emissions allocated to individuall stacks based on the emissions profile for filterable PM and CPM as a function of product drying observed during Nov. 2011 stack testing of stacks CHX, CHY, CHZ, TEE, and TEM. See *"Review of Results of November 2011 Source Testing at Blackfoot Facility of Basic American Foods and Development of Revised Emission Factors"* for details.	0.074	lb PM-10/ 000 lb unit process throughput	Same as hourly emission factor.
C	CNW	0.075	lb PM-10/ 000 lb unit process throughput		0.075	lb PM-10/ 000 lb unit process throughput	Same as hourly emission factor.
C	CTU	0.505	lb PM-10/ 000 lb unit process throughput		0.505	lb PM-10/ 000 lb unit process throughput	Same as hourly emission factor.
C	CTZ	0.128	lb PM-10/ 000 lb unit process throughput		0.128	lb PM-10/ 000 lb unit process throughput	Same as hourly emission factor.
C	TCD	0.0342	lb PM-10/ 000 lb unit process throughput	PM Emission factor for bean drying at Plover facility divided equally between stacks TCD and TCO. All PM measured assumed to be PM-10.	0.034	lb PM-10/ 000 lb unit process throughput	Same as hourly emission factor.
C	TCO	0.0342	lb PM-10/ 000 lb unit process throughput	PM Emission factor for bean drying at Plover facility divided equally between stacks TCD and TCO. All PM measured assumed to be PM-10.	0.034	lb PM-10/ 000 lb unit process throughput	Same as hourly emission factor.
C	TAC	0.391	lb PM-10/ 000 lb unit process throughput	The sum of TAC and TAH assumed to be the same as the sum of HEB and HNL. Emissions divided equally between stacks.	0.391	lb PM-10/ 000 lb unit process throughput	Same as hourly emission factor.
C	TAH	0.391	lb PM-10/ 000 lb unit process throughput	The sum of TAC and TAH assumed to be the same as the sum of HEB and HNL. Emissions divided equally between stacks.	0.391	lb PM-10/ 000 lb unit process throughput	Same as hourly emission factor.

Table C-10
PM-10 Emission Factors

Production Process	Stack Identification Code	Hourly Emissions			Annual Emissions		
		Emission Factor	Emission Factor Units	Basis for Factor	Emission Factor	Emission Factor Units	Basis for Factor
C	EUW	0.000	lb PM-10/ 000 lb unit process throughput	Derived from TSP emission factors for this stack. There are no condensible PM emissions for this stack. 50.0% of solid TSP emissions assumed to be PM 10, based on AP-42 Table 9.9.1-2, Note g.	0.000	lb PM-10/ 000 lb unit process throughput	Same as hourly emission factor.
C	SUF	0.000	lb PM-10/ 000 lb unit process throughput	Assumed to be the same as EUW.	0.000	lb PM-10/ 000 lb unit process throughput	Same as hourly emission factor.
C	DSX	0.009	lb PM-10/ 000 lb unit process throughput	Derived from TSP emission factors for this stack. There are no condensible PM emissions for this stack. 50.0% of solid TSP emissions assumed to be PM 10, based on AP-42 Table 9.9.1-2, Note g.	0.009	lb PM-10/ 000 lb unit process throughput	Same as hourly emission factor.
C	EGS	0.002	lb PM-10/ 000 lb unit process throughput	Assumed to be the same as EGT.	0.002	lb PM-10/ 000 lb unit process throughput	Same as hourly emission factor.
C	EGT	0.002	lb PM-10/ 000 lb unit process throughput	Derived from TSP emission factors for this stack. There are no condensible PM emissions for this stack. 50.0% of solid TSP emissions assumed to be PM 10, based on AP-42 Table 9.9.1-2, Note g.	0.002	lb PM-10/ 000 lb unit process throughput	Same as hourly emission factor.
C	FIF	0.038	lb PM-10/ 000 lb unit process throughput	Derived from AP-42, Table 9.9.1-1 (5/98) for Internal Vibrating Grain Cleaning with cyclone control. Filterable PM emission factor is 0.075 lb/ton of grain processed. Per Note j of Table 9.9.1-1, PM10 assumed to be 25 % of TSP.	0.038	lb PM-10/ 000 lb unit process throughput	Same as hourly emission factor.
Plant	Heaters	0.007	lb PM-10/MM Btu	AP-42 Table 1.4-2. On an annual basis, firing assumed to occur at a maximum of 50% of burner capacity.	0.007	lb PM-10/MM Btu	Same as hourly emission factor.
Plant	Fugitive Dust	3.220	lb PM-10/hr	AP-42 Section 13.2. Emission listed is for dry conditions, appropriate for daily emission rates.	3.220	lb PM-10/hr	Same as hourly emission factor.

Table C-11
Estimated PM-10 Emissions

Production Process	Stack Identification Code	Annual Emissions				
		Emission Factor	Emission Factor Units	Operating Rate	Operating Units	Annual Emissions, tpy
Boilers	Boiler 1	*Enforceable limit from PTC P-050301 (10/05)*				
Boilers	Boiler 2					
Boilers	Boiler 3					
Boilers	Boilers 1 and 2					
Boilers	Boilers 1, 2, and 3					18.3
A	DHQ	0.015	lb PM-10/ 000 lb unit process throughput	183,960	000 lbs throughput/yr	1.38
A	DHT	0.110	lb PM-10/ 000 lb unit process throughput	91,980	000 lbs throughput/yr	5.06
A	DHU	0.110	lb PM-10/ 000 lb unit process throughput	91,980	000 lbs throughput/yr	5.06
A	DHZ	0.083	lb PM-10/ 000 lb unit process throughput	183,960	000 lbs throughput/yr	7.63
A	DKV	0.094	lb PM-10/ 000 lb unit process throughput	22,995	000 lbs throughput/yr	1.08
A	DKW	0.003	lb TSP/ 000 lb process throughput (including mixback)	22,995	000 lbs throughput/yr	0.03
B	DXS	0.008	lb PM-10/ 000 lb unit process throughput	183,960	000 lbs throughput/yr	0.76
B	DUO	0.008	lb PM-10/ 000 lb unit process throughput	183,960	000 lbs throughput/yr	0.76
B	DPY	0.008	lb PM-10/ 000 lb unit process throughput	183,960	000 lbs throughput/yr	0.76
B	DPZ	0.008	lb PM-10/ 000 lb unit process throughput	183,960	000 lbs throughput/yr	0.76
B	DUQ	0.110	lb PM-10/ 000 lb unit process throughput	91,980	000 lbs throughput/yr	5.06
B	DUT	0.110	lb PM-10/ 000 lb unit process throughput	91,980	000 lbs throughput/yr	5.06
B	DQA	0.110	lb PM-10/ 000 lb unit process throughput	91,980	000 lbs throughput/yr	5.06
B	DQB	0.110	lb PM-10/ 000 lb unit process throughput	91,980	000 lbs throughput/yr	5.06
B	DUV	0.019	lb PM-10/ 000 lb unit process throughput	367,920	000 lbs throughput/yr	3.58
B	DSO	0.046	lb PM-10/ 000 lb unit process throughput	45,990	000 lbs throughput/yr	1.06
B	DSK	0.008	lb PM-10/ 000 lb unit process throughput	45,990	000 lbs throughput/yr	0.18
B	DUY	0.003	lb PM-10/ 000 lb unit process throughput	45,990	000 lbs throughput/yr	0.07
B	DUZ	0.003	lb PM-10/ 000 lb unit process throughput	45,990	000 lbs throughput/yr	0.07
B	DRY	0.004	lb PM-10/ 000 lb unit process throughput	45,990	000 lbs throughput/yr	0.09
C	ALB	0.055	lb PM-10/ 000 lb unit process throughput	16,057	000 lbs throughput/yr	0.44

Table C-11
Estimated PM-10 Emissions

Production Process	Stack Identification Code	Annual Emissions				
		Emission Factor	Emission Factor Units	Operating Rate	Operating Units	Annual Emissions, tpy
C	ALQ	0.035	lb PM-10/ 000 lb unit process throughput	16,057	000 lbs throughput/yr	0.28
C	ALT	0.004	lb PM-10/ 000 lb unit process throughput	16,057	000 lbs throughput/yr	0.03
C	ALY	0.001	lb PM-10/ 000 lb unit process throughput	16,057	000 lbs throughput/yr	0.01
C	ALV	0.055	lb PM-10/ 000 lb unit process throughput	26,280	000 lbs throughput/yr	0.72
C	ALW	0.035	lb PM-10/ 000 lb unit process throughput	26,280	000 lbs throughput/yr	0.46
C	ALX	0.004	lb PM-10/ 000 lb unit process throughput	26,280	000 lbs throughput/yr	0.05
C	AEV	0.055	lb PM-10/ 000 lb unit process throughput	17,520	000 lbs throughput/yr	0.48
C	AEW	0.039	lb PM-10/ 000 lb unit process throughput	17,520	000 lbs throughput/yr	0.34
C	AGQ	0.001	lb PM-10/ 000 lb unit process throughput	17,520	000 lbs throughput/yr	0.01
C	CIR_RTC	0.046	lb PM-10/ 000 lb unit process throughput	74,460	000 lbs throughput/yr	1.72
C	CHV	0.001	lb PM-10/ 000 lb unit process throughput	74,460	000 lbs throughput/yr	0.03
C	CXX	0.343	lb PM-10/ 000 lb unit process throughput	43,800	000 lbs throughput/yr	7.51
C	CYY	0.327	lb PM-10/ 000 lb unit process throughput	43,800	000 lbs throughput/yr	7.16
C	CHX	0.190	lb PM-10/ 000 lb unit process throughput	15,698	000 lbs throughput/yr	1.49
C	CHY	0.063	lb PM-10/ 000 lb unit process throughput	15,698	000 lbs throughput/yr	0.50
C	CHZ	0.033	lb PM-10/ 000 lb unit process throughput	15,698	000 lbs throughput/yr	0.26
C	TEE	0.009	lb PM-10/ 000 lb unit process throughput	15,698	000 lbs throughput/yr	0.07
C	TEM	0.009	lb PM-10/ 000 lb unit process throughput	15,698	000 lbs throughput/yr	0.07
C	HEB	0.640	lb PM-10/ 000 lb unit process throughput	19,272	000 lbs throughput/yr	6.17
C	HNL	0.142	lb PM-10/ 000 lb unit process throughput	19,272	000 lbs throughput/yr	1.37
C	CBB	0.101	lb PM-10/ 000 lb unit process throughput	15,698	000 lbs throughput/yr	0.79
C	CTQ	0.081	lb PM-10/ 000 lb unit process throughput	15,698	000 lbs throughput/yr	0.63
C	CTR	0.078	lb PM-10/ 000 lb unit process throughput	15,698	000 lbs throughput/yr	0.61
C	CTS	0.024	lb PM-10/ 000 lb unit process throughput	15,698	000 lbs throughput/yr	0.19

Table C-11
Estimated PM-10 Emissions

Production Process	Stack Identification Code	Annual Emissions				
		Emission Factor	Emission Factor Units	Operating Rate	Operating Units	Annual Emissions, tpy
C	CTT	0.020	lb PM-10/ 000 lb unit process throughput	15,698	000 lbs throughput/yr	0.16
C	CNV	0.074	lb PM-10/ 000 lb unit process throughput	15,698	000 lbs throughput/yr	0.58
C	CNW	0.075	lb PM-10/ 000 lb unit process throughput	15,698	000 lbs throughput/yr	0.59
C	CTU	0.505	lb PM-10/ 000 lb unit process throughput	15,698	000 lbs throughput/yr	3.96
C	CTZ	0.128	lb PM-10/ 000 lb unit process throughput	15,698	000 lbs throughput/yr	1.00
C	TCD	0.034	lb PM-10/ 000 lb unit process throughput	8,760	000 lbs throughput/yr	0.15
C	TCO	0.034	lb PM-10/ 000 lb unit process throughput	8,760	000 lbs throughput/yr	0.15
C	TAC	0.391	lb PM-10/ 000 lb unit process throughput	3,504	000 lbs throughput/yr	0.69
C	TAH	0.391	lb PM-10/ 000 lb unit process throughput	3,504	000 lbs throughput/yr	0.69
C	EUW	0.000	lb PM-10/ 000 lb unit process throughput	376,680	000 lbs throughput/yr	0.02
C	SUF	0.000	lb PM-10/ 000 lb unit process throughput	376,680	000 lbs throughput/yr	0.02
C	DSX	0.009	lb PM-10/ 000 lb unit process throughput	8,760	000 lbs throughput/yr	0.04
C	EGS	0.002	lb PM-10/ 000 lb unit process throughput	55,684	000 lbs throughput/yr	0.04
C	EGT	0.002	lb PM-10/ 000 lb unit process throughput	55,684	000 lbs throughput/yr	0.04
C	FIF	0.038	lb PM-10/ 000 lb unit process throughput	6,899	000 lbs throughput/yr	0.13
Plant	Heaters	0.007	lb PM-10/MM Btu	339,781	MM Btu/yr	1.27
Plant	Fugitive Dust			7,621 (see note)	hrs/yr	3.07

Note: Fugitive Dust annual hours adjusted to incorporate net effects of precipitation corrections calculated pe

Table C-12
VOC Emission Factors

Production Process	Stack Identification Code	Annual Emissions		
		Emission Factor	Units	Basis for Factor
Boilers	Boiler 1	0.0054	lbs VOC/ MM Btu	Based on AP-42 emission factor of 5.5 lbs/1000 scf of natural gas combusted. Natural gas has the highest emission factor of any fuel available for boiler firing.
Boilers	Boiler 2	0.0054	lbs VOC/ MM Btu	Based on AP-42 emission factor of 5.5 lbs/1000 scf of natural gas combusted. Natural gas has the highest emission factor of any fuel available for boiler firing.
Boilers	Boiler 3	0.0054	lbs VOC/ MM Btu	Based on AP-42 emission factor of 5.5 lbs/1000 scf of natural gas combusted. Natural gas has the highest emission factor of any fuel available for boiler firing.
Boilers	Boilers 1 and 2			
Boilers	Boilers 1, 2, and 3			
A	DHT	0.0054	lbs VOC/ MM Btu	Based on AP-42 emission factor of 5.5 lbs/1000 scf of natural gas combusted.
A	DHU	0.0054	lbs VOC/ MM Btu	Based on AP-42 emission factor of 5.5 lbs/1000 scf of natural gas combusted.
A	DHZ	0.0054	lbs VOC/ MM Btu	Based on AP-42 emission factor of 5.5 lbs/1000 scf of natural gas combusted.
B	DUQ	0.0054	lbs VOC/ MM Btu	Based on AP-42 emission factor of 5.5 lbs/1000 scf of natural gas combusted.
B	DUT	0.0054	lbs VOC/ MM Btu	Based on AP-42 emission factor of 5.5 lbs/1000 scf of natural gas combusted.
B	DQA	0.0054	lbs VOC/ MM Btu	Based on AP-42 emission factor of 5.5 lbs/1000 scf of natural gas combusted.
B	DQB	0.0054	lbs VOC/ MM Btu	Based on AP-42 emission factor of 5.5 lbs/1000 scf of natural gas combusted.
B	DUV	0.0054	lbs VOC/ MM Btu	Based on AP-42 emission factor of 5.5 lbs/1000 scf of natural gas combusted.
C	AEV	0.0054	lbs VOC/ MM Btu	Based on AP-42 emission factor of 5.5 lbs/1000 scf of natural gas combusted.
C	CXX	0.0054	lbs VOC/ MM Btu	Based on AP-42 emission factor of 5.5 lbs/1000 scf of natural gas combusted.
C	CYY	0.0054	lbs VOC/ MM Btu	Based on AP-42 emission factor of 5.5 lbs/1000 scf of natural gas combusted.
C	CHX	0.0054	lbs VOC/ MM Btu	Based on AP-42 emission factor of 5.5 lbs/1000 scf of natural gas combusted.
C	CHY	0.0054	lbs VOC/ MM Btu	Based on AP-42 emission factor of 5.5 lbs/1000 scf of natural gas combusted.
C	CHZ	0.0054	lbs VOC/ MM Btu	Based on AP-42 emission factor of 5.5 lbs/1000 scf of natural gas combusted.
C	HEB	0.0054	lbs VOC/ MM Btu	Based on AP-42 emission factor of 5.5 lbs/1000 scf of natural gas combusted.
C	HNL	0.0054	lbs VOC/ MM Btu	Based on AP-42 emission factor of 5.5 lbs/1000 scf of natural gas combusted.
C	CBB	0.0054	lbs VOC/ MM Btu	Based on AP-42 emission factor of 5.5 lbs/1000 scf of natural gas combusted.
C	CTQ	0.0054	lbs VOC/ MM Btu	Based on AP-42 emission factor of 5.5 lbs/1000 scf of natural gas combusted.

Table C-12
VOC Emission Factors

Production Process	Stack Identification Code	Annual Emissions		
		Emission Factor	Units	Basis for Factor
C	CTR	0.0054	lbs VOC/ MM Btu	Based on AP-42 emission factor of 5.5 lbs/1000 scf of natural gas combusted.
C	CTS	0.0054	lbs VOC/ MM Btu	Based on AP-42 emission factor of 5.5 lbs/1000 scf of natural gas combusted.
C	CTT	0.0054	lbs VOC/ MM Btu	Based on AP-42 emission factor of 5.5 lbs/1000 scf of natural gas combusted.
C	CNV	0.0054	lbs VOC/ MM Btu	Based on AP-42 emission factor of 5.5 lbs/1000 scf of natural gas combusted.
C	CNW	0.0054	lbs VOC/ MM Btu	Based on AP-42 emission factor of 5.5 lbs/1000 scf of natural gas combusted.
C	CTZ	0.0054	lbs VOC/ MM Btu	Based on AP-42 emission factor of 5.5 lbs/1000 scf of natural gas combusted.
C	TCD	0.0054	lbs VOC/ MM Btu	Based on AP-42 emission factor of 5.5 lbs/1000 scf of natural gas combusted.
C	TAC	0.0054	lbs VOC/ MM Btu	Based on AP-42 emission factor of 5.5 lbs/1000 scf of natural gas combusted.
C	TAH	0.0054	lbs VOC/ MM Btu	Based on AP-42 emission factor of 5.5 lbs/1000 scf of natural gas combusted.
Plant	Heaters	0.0054	lbs VOC/ MM Btu	Based on AP-42 emission factor of 5.5 lbs/1000 scf of natural gas combusted.

Table C-13
Estimated VOC Emissions

Production Process	Stack Identification Code	Annual Emissions				
		Emission Factor	Emission Factor Units	Operating Rate	Operating Units	Annual Emissions, tpy
Boilers	Boiler 1	0.0054	lbs VOC/ MM Btu	483,700	MMBtu	1.3
Boilers	Boiler 2	0.0054	lbs VOC/ MM Btu	666,662	MMBtu	1.8
Boilers	Boiler 3	0.0054	lbs VOC/ MM Btu	342,078	MMBtu	0.9
Boilers	Boilers 1 and 2					0.0
Boilers	Boilers 1, 2, and 3					0.0
A	DHT	0.0054	lbs VOC/ MM Btu	61,320	MMBtu	0.2
A	DHU	0.0054	lbs VOC/ MM Btu	61,320	MMBtu	0.2
A	DHZ	0.0054	lbs VOC/ MM Btu	52,560	MMBtu	0.1
B	DUQ	0.0054	lbs VOC/ MM Btu	61,320	MMBtu	0.2
B	DUT	0.0054	lbs VOC/ MM Btu	61,320	MMBtu	0.2
B	DQA	0.0054	lbs VOC/ MM Btu	61,320	MMBtu	0.2
B	DQB	0.0054	lbs VOC/ MM Btu	61,320	MMBtu	0.2
B	DUV	0.0054	lbs VOC/ MM Btu	105,120	MMBtu	0.3
C	AEV	0.0054	lbs VOC/ MM Btu	28,908	MMBtu	0.1
C	CXX	0.0054	lbs VOC/ MM Btu	93,951	MMBtu	0.3
C	CYY	0.0054	lbs VOC/ MM Btu	65,919	MMBtu	0.2
C	CHX	0.0054	lbs VOC/ MM Btu	68,503	MMBtu	0.2
C	CHY	0.0054	lbs VOC/ MM Btu	40,471	MMBtu	0.1
C	CHZ	0.0054	lbs VOC/ MM Btu	19,798	MMBtu	0.1
C	HEB	0.0054	lbs VOC/ MM Btu	94,433	MMBtu	0.3
C	HNL	0.0054	lbs VOC/ MM Btu	28,207	MMBtu	0.1
C	CBB	0.0054	lbs VOC/ MM Btu	13,140	MMBtu	0.0
C	CTQ	0.0054	lbs VOC/ MM Btu	35,097	MMBtu	0.1
C	CTR	0.0054	lbs VOC/ MM Btu	57,715	MMBtu	0.2
C	CTS	0.0054	lbs VOC/ MM Btu	76,931	MMBtu	0.2
C	CTT	0.0054	lbs VOC/ MM Btu	84,971	MMBtu	0.2
C	CNV	0.0054	lbs VOC/ MM Btu	105,120	MMBtu	0.3
C	CNW	0.0054	lbs VOC/ MM Btu	105,120	MMBtu	0.3
C	CTZ	0.0054	lbs VOC/ MM Btu	94,608	MMBtu	0.3
C	TCD	0.0054	lbs VOC/ MM Btu	17,520	MMBtu	0.0
C	TAC	0.0054	lbs VOC/ MM Btu	10,950	MMBtu	0.0
C	TAH	0.0054	lbs VOC/ MM Btu	10,950	MMBtu	0.0
Plant	Heaters	0.0054	lbs VOC/ MM Btu	679,561	MMBtu	1.8

Table C-14
Lead Emission Factors

Production Process	Stack Identification Code	Annual emissions		
		Emission Factor	Emission Factor Units	Basis for Factor
Boilers	Boiler 1	4.5E-06	lbs Pb/ MM Btu	Maximum of Pb emission factors for natural gas, No. 2 oil, and No. 6 oil. AP-42 factors used for natural gas and #2 oil. Emission factor selected is the one that yields the highest emission rate after multipled by the boiler operating rate for that fuel. 50% remvoval of Pb assumed in wet scrubber when fuel oil combusted.
Boilers	Boiler 2	4.50E-06	lbs Pb/ MM Btu	Maximum of Pb emission factors for natural gas, No. 2 oil, and No. 6 oil. AP-42 factors used for natural gas and #2 oil. Emission factor selected is the one that yields the highest emission rate after multipled by the boiler operating rate for that fuel. 50% remvoval of Pb assumed in wet scrubber when fuel oil combusted.
Boilers	Boiler 3	1.9E-06	lbs Pb/ MM Btu	Weighted average based on 1440 hrs oil firing at 9E-6 lb Pb/MMBtu (AP-42 emission factor for #2 oil firing) and 7128 hrs natural gas firing at 4.9E-7 lbs Pb Pb/MMBtu (AP-42 emission factor of 0.0005 lbs Pb/MMscf of fuel combusted).
Boilers	Boilers 1 and 2			
Boilers	Boilers 1, 2, and 3			
A	DHT	4.9E-07	lbs Pb/ MM Btu	Based on AP-42 emission factor of 0.0005 lbs Pb/MMscf of fuel combusted.
A	DHU	4.9E-07	lbs Pb/ MM Btu	Based on AP-42 emission factor of 0.0005 lbs Pb/MMscf of fuel combusted.
A	DHZ	4.9E-07	lbs Pb/ MM Btu	Based on AP-42 emission factor of 0.0005 lbs Pb/MMscf of fuel combusted.
B	DUQ	4.9E-07	lbs Pb/ MM Btu	Based on AP-42 emission factor of 0.0005 lbs Pb/MMscf of fuel combusted.
B	DUT	4.9E-07	lbs Pb/ MM Btu	Based on AP-42 emission factor of 0.0005 lbs Pb/MMscf of fuel combusted.
B	DQA	4.9E-07	lbs Pb/ MM Btu	Based on AP-42 emission factor of 0.0005 lbs Pb/MMscf of fuel combusted.
B	DQB	4.9E-07	lbs Pb/ MM Btu	Based on AP-42 emission factor of 0.0005 lbs Pb/MMscf of fuel combusted.
B	DUV	4.9E-07	lbs Pb/ MM Btu	Based on AP-42 emission factor of 0.0005 lbs Pb/MMscf of fuel combusted.
C	AEV	4.9E-07	lbs Pb/ MM Btu	Based on AP-42 emission factor of 0.0005 lbs Pb/MMscf of fuel combusted.
C	CXX	4.9E-07	lbs Pb/ MM Btu	Based on AP-42 emission factor of 0.0005 lbs Pb/MMscf of fuel combusted.
C	CYY	4.9E-07	lbs Pb/ MM Btu	Based on AP-42 emission factor of 0.0005 lbs Pb/MMscf of fuel combusted.
C	CHX	4.9E-07	lbs Pb/ MM Btu	Based on AP-42 emission factor of 0.0005 lbs Pb/MMscf of fuel combusted. Emissions allocated to specific stacks within the process in proportion to stack exhaust rate.
C	CHY	4.9E-07	lbs Pb/ MM Btu	Based on AP-42 emission factor of 0.0005 lbs Pb/MMscf of fuel combusted. Emissions allocated to specific stacks within the process in proportion to stack exhaust rate.
C	CHZ	4.9E-07	lbs Pb/ MM Btu	Based on AP-42 emission factor of 0.0005 lbs Pb/MMscf of fuel combusted. Emissions allocated to specific stacks within the process in proportion to stack exhaust rate.
C	HEB	4.9E-07	lbs Pb/ MM Btu	Based on AP-42 emission factor of 0.0005 lbs Pb/MMscf of fuel combusted. Pb emission factor allocated to HEB and HNL in proportion to measured heat rates at each stack.
C	HNL	4.9E-07	lbs Pb/ MM Btu	Based on AP-42 emission factor of 0.0005 lbs Pb/MMscf of fuel combusted. Pb emission factor allocated to HEB and HNL in proportion to measured heat rates at each stack.
C	CBB	4.9E-07	lbs Pb/ MM Btu	Based on AP-42 emission factor of 0.0005 lbs Pb/MMscf of fuel combusted.
C	CTQ	4.9E-07	lbs Pb/ MM Btu	Based on AP-42 emission factor of 0.0005 lbs Pb/MMscf of fuel combusted. Emissions allocated to specific stacks within the process in proportion to stack exhaust rate.
C	CTR	4.9E-07	lbs Pb/ MM Btu	Based on AP-42 emission factor of 0.0005 lbs Pb/MMscf of fuel combusted. Emissions allocated to specific stacks within the process in proportion to stack exhaust rate.
C	CTS	4.9E-07	lbs Pb/ MM Btu	Based on AP-42 emission factor of 0.0005 lbs Pb/MMscf of fuel combusted. Emissions allocated to specific stacks within the process in proportion to stack exhaust rate.
C	CTT	4.9E-07	lbs Pb/ MM Btu	Based on AP-42 emission factor of 0.0005 lbs Pb/MMscf of fuel combusted. Emissions allocated to specific stacks within the process in proportion to stack exhaust rate.
C	CNV	4.9E-07	lbs Pb/ MM Btu	Based on AP-42 emission factor of 0.0005 lbs Pb/MMscf of fuel combusted.
C	CNW	4.9E-07	lbs Pb/ MM Btu	Based on AP-42 emission factor of 0.0005 lbs Pb/MMscf of fuel combusted.
C	CTZ	4.9E-07	lbs Pb/ MM Btu	Based on AP-42 emission factor of 0.0005 lbs Pb/MMscf of fuel combusted.

Table C-14
Lead Emission Factors

Production Process	Stack Identification Code	Annual emissions		
		Emission Factor	Emission Factor Units	Basis for Factor
C	TCD	4.9E-07	lbs Pb/ MM Btu	Based on AP-42 emission factor of 0.0005 lbs Pb/MMscf of fuel combusted.
C	TAC	4.9E-07	lbs Pb/ MM Btu	Based on AP-42 emission factor of 0.0005 lbs Pb/MMscf of fuel combusted. Allocated equally between stacks TAC and TAH.
C	TAH	4.9E-07	lbs Pb/ MM Btu	Based on AP-42 emission factor of 0.0005 lbs Pb/MMscf of fuel combusted. Allocated equally between stacks TAC and TAH.
Plant	Heaters	4.9E-07	lbs Pb/ MM Btu	Based on AP-42 emission factor of 0.0005 lbs Pb/MMscf of fuel combusted. On an annual basis, firing assumed to occur at a maximum of 50% of burner capacity.

Table C-15
Estimated Lead Emissions

Production Process	Stack Identification Code	Annual Emissions		
		Emission Factor, lb Pb/MMBtu	Operating Factor, MMBtu/yr	Emissions, ton/yr
Boilers	Boiler 1	4.50E-06	325,171	7.32E-04
Boilers	Boiler 2	4.50E-06	643,510	1.45E-03
Boilers	Boiler 3	1.92E-06	341,640	3.28E-04
Boilers	Boilers 1 and 2			
Boilers	Boilers 1, 2, and			
A	DHT	4.90E-07	61,320	1.50E-05
A	DHU	4.90E-07	61,320	1.50E-05
A	DHZ	4.90E-07	52,560	1.29E-05
B	DUQ	4.90E-07	61,320	1.50E-05
B	DUT	4.90E-07	61,320	1.50E-05
B	DQA	4.90E-07	61,320	1.50E-05
B	DQB	4.90E-07	61,320	1.50E-05
B	DUV	4.90E-07	105,120	2.58E-05
C	AEV	4.90E-07	28,908	7.09E-06
C	CXX	4.90E-07	93,951	2.30E-05
C	CYY	4.90E-07	65,919	1.62E-05
C	CHX	4.90E-07	68,503	1.68E-05
C	CHY	4.90E-07	40,471	9.92E-06
C	CHZ	4.90E-07	19,798	4.85E-06
C	HEB	4.90E-07	94,433	2.31E-05
C	HNL	4.90E-07	28,207	6.91E-06
C	CBB	4.90E-07	13,140	3.22E-06
C	CTQ	4.90E-07	35,097	8.60E-06
C	CTR	4.90E-07	57,715	1.41E-05
C	CTS	4.90E-07	76,931	1.89E-05
C	CTT	4.90E-07	84,971	2.08E-05
C	CNV	4.90E-07	105,120	2.58E-05
C	CNW	4.90E-07	105,120	2.58E-05
C	CTZ	4.90E-07	94,608	2.32E-05
C	TCD	4.90E-07	17,520	4.29E-06
C	TAC	4.90E-07	10,950	2.68E-06
C	TAH	4.90E-07	10,950	2.68E-06
Plant	Heaters	4.90E-07	679,561	1.67E-04

Table C-16
GHG Emission Factors

Production Process	Stack Identification Code	Annual Emissions		
		Emission Factor	Units	Basis for Factor
Boilers	Boiler 1	118	lbs GHG/ MM Btu	Based on AP-42 emission factor of 120 lbs/1000 scf of natural gas combusted. Potential annual emissions are highest with natural gas combustion because there are no fuel comubstion when burning nattural gas.
Boilers	Boiler 2	118	lbs GHG/ MM Btu	Based on AP-42 emission factor of 120 lbs/1000 scf of natural gas combusted. Potential annual emissions are highest with natural gas combustion because there are no fuel comubstion when burning nattural gas.
Boilers	Boiler 3	118	lbs GHG/ MM Btu	Based on AP-42 emission factor of 120 lbs/1000 scf of natural gas combusted. Potential annual emissions are highest with natural gas combustion because there are no fuel comubstion when burning nattural gas.
Boilers	Boilers 1 and 2			
Boilers	Boilers 1, 2, and 3			
A	DHT	118	lbs GHG/ MM Btu	Based on AP-42 emission factor of 120 lbs/1000 scf of natural gas combusted.
A	DHU	118	lbs GHG/ MM Btu	Based on AP-42 emission factor of 120 lbs/1000 scf of natural gas combusted.
A	DHZ	118	lbs GHG/ MM Btu	Based on AP-42 emission factor of 120 lbs/1000 scf of natural gas combusted.
B	DUQ	118	lbs GHG/ MM Btu	Based on AP-42 emission factor of 120 lbs/1000 scf of natural gas combusted.
B	DUT	118	lbs GHG/ MM Btu	Based on AP-42 emission factor of 120 lbs/1000 scf of natural gas combusted.
B	DQA	118	lbs GHG/ MM Btu	Based on AP-42 emission factor of 120 lbs/1000 scf of natural gas combusted.
B	DQB	118	lbs GHG/ MM Btu	Based on AP-42 emission factor of 120 lbs/1000 scf of natural gas combusted.
B	DUV	118	lbs GHG/ MM Btu	Based on AP-42 emission factor of 120 lbs/1000 scf of natural gas combusted.
C	AEV	118	lbs GHG/ MM Btu	Based on AP-42 emission factor of 120 lbs/1000 scf of natural gas combusted.
C	CXX	118	lbs GHG/ MM Btu	Based on AP-42 emission factor of 120 lbs/1000 scf of natural gas combusted.
C	CYY	118	lbs GHG/ MM Btu	Based on AP-42 emission factor of 120 lbs/1000 scf of natural gas combusted.
C	CHX	118	lbs GHG/ MM Btu	Based on AP-42 emission factor of 120 lbs/1000 scf of natural gas combusted.
C	CHY	118	lbs GHG/ MM Btu	Based on AP-42 emission factor of 120 lbs/1000 scf of natural gas combusted.
C	CHZ	118	lbs GHG/ MM Btu	Based on AP-42 emission factor of 120 lbs/1000 scf of natural gas combusted.
C	HEB	118	lbs GHG/ MM Btu	Based on AP-42 emission factor of 120 lbs/1000 scf of natural gas combusted.
C	HNL	118	lbs GHG/ MM Btu	Based on AP-42 emission factor of 120 lbs/1000 scf of natural gas combusted.
C	CBB	118	lbs GHG/ MM Btu	Based on AP-42 emission factor of 120 lbs/1000 scf of natural gas combusted.
C	CTQ	118	lbs GHG/ MM Btu	Based on AP-42 emission factor of 120 lbs/1000 scf of natural gas combusted.

Table C-16
GHG Emission Factors

Production Process	Stack Identification Code	Annual Emissions		
		Emission Factor	Units	Basis for Factor
C	CTR	118	lbs GHG/ MM Btu	Based on AP-42 emission factor of 120 lbs/1000 scf of natural gas combusted.
C	CTS	118	lbs GHG/ MM Btu	Based on AP-42 emission factor of 120 lbs/1000 scf of natural gas combusted.
C	CTT	118	lbs GHG/ MM Btu	Based on AP-42 emission factor of 120 lbs/1000 scf of natural gas combusted.
C	CNV	118	lbs GHG/ MM Btu	Based on AP-42 emission factor of 120 lbs/1000 scf of natural gas combusted.
C	CNW	118	lbs GHG/ MM Btu	Based on AP-42 emission factor of 120 lbs/1000 scf of natural gas combusted.
C	CTZ	118	lbs GHG/ MM Btu	Based on AP-42 emission factor of 120 lbs/1000 scf of natural gas combusted.
C	TCD	118	lbs GHG/ MM Btu	Based on AP-42 emission factor of 120 lbs/1000 scf of natural gas combusted.
C	TAC	118	lbs GHG/ MM Btu	Based on AP-42 emission factor of 120 lbs/1000 scf of natural gas combusted.
C	TAH	118	lbs GHG/ MM Btu	Based on AP-42 emission factor of 120 lbs/1000 scf of natural gas combusted.
Plant	Heaters	118	lbs GHG/ MM Btu	Based on AP-42 emission factor of 120 lbs/1000 scf of natural gas combusted.

Table C-17
Estimated GHG Emissions

Production Process	Stack Identification Code	Annual Emissions				
		Emission Factor	Emission Factor Units	Operating Rate	Operating Units	Annual Emissions, tpy
Boilers	Boiler 1	117.6471	lbs GHG/ MM Btu	483,700	MMBtu	28453.0
Boilers	Boiler 2	117.6471	lbs GHG/ MM Btu	666,662	MMBtu	39215.4
Boilers	Boiler 3	117.6471	lbs GHG/ MM Btu	342,078	MMBtu	20122.2
Boilers	Boilers 1 and 2					0.0
Boilers	Boilers 1, 2, and 3					0.0
A	DHT	117.6471	lbs GHG/ MM Btu	61,320	MMBtu	3607.1
A	DHU	117.6471	lbs GHG/ MM Btu	61,320	MMBtu	3607.1
A	DHZ	117.6471	lbs GHG/ MM Btu	52,560	MMBtu	3091.8
B	DUQ	117.6471	lbs GHG/ MM Btu	61,320	MMBtu	3607.1
B	DUT	117.6471	lbs GHG/ MM Btu	61,320	MMBtu	3607.1
B	DQA	117.6471	lbs GHG/ MM Btu	61,320	MMBtu	3607.1
B	DQB	117.6471	lbs GHG/ MM Btu	61,320	MMBtu	3607.1
B	DUV	117.6471	lbs GHG/ MM Btu	105,120	MMBtu	6183.5
C	AEV	117.6471	lbs GHG/ MM Btu	28,908	MMBtu	1700.5
C	CXX	117.6471	lbs GHG/ MM Btu	93,951	MMBtu	5526.5
C	CYY	117.6471	lbs GHG/ MM Btu	65,919	MMBtu	3877.6
C	CHX	117.6471	lbs GHG/ MM Btu	68,503	MMBtu	4029.6
C	CHY	117.6471	lbs GHG/ MM Btu	40,471	MMBtu	2380.7
C	CHZ	117.6471	lbs GHG/ MM Btu	19,798	MMBtu	1164.6
C	HEB	117.6471	lbs GHG/ MM Btu	94,433	MMBtu	5554.9
C	HNL	117.6471	lbs GHG/ MM Btu	28,207	MMBtu	1659.2
C	CBB	117.6471	lbs GHG/ MM Btu	13,140	MMBtu	772.9
C	CTQ	117.6471	lbs GHG/ MM Btu	35,097	MMBtu	2064.5
C	CTR	117.6471	lbs GHG/ MM Btu	57,715	MMBtu	3395.0
C	CTS	117.6471	lbs GHG/ MM Btu	76,931	MMBtu	4525.4
C	CTT	117.6471	lbs GHG/ MM Btu	84,971	MMBtu	4998.3
C	CNV	117.6471	lbs GHG/ MM Btu	105,120	MMBtu	6183.5
C	CNW	117.6471	lbs GHG/ MM Btu	105,120	MMBtu	6183.5
C	CTZ	117.6471	lbs GHG/ MM Btu	94,608	MMBtu	5565.2
C	TCD	117.6471	lbs GHG/ MM Btu	17,520	MMBtu	1030.6
C	TAC	117.6471	lbs GHG/ MM Btu	10,950	MMBtu	644.1
C	TAH	117.6471	lbs GHG/ MM Btu	10,950	MMBtu	644.1
Plant	Heaters	117.6471	lbs GHG/ MM Btu	679,561	MMBtu	39,974.2

Table C-18
CO2e Emission Factors

Production Process	Stack Identification Code	Annual Emissions		
		Emission Factor	Units	Basis for Factor
Boilers	Boiler 1	118	lbs CO2e/ MM Btu	Based on AP-42 emission factor of 120 lbs/1000 scf of natural gas combusted. Potential annual emissions are highest with natural gas combustion because there are no fuel comubstion when burning nattural gas.
Boilers	Boiler 2	118	lbs CO2e/ MM Btu	Based on AP-42 emission factor of 120 lbs/1000 scf of natural gas combusted. Potential annual emissions are highest with natural gas combustion because there are no fuel comubstion when burning nattural gas.
Boilers	Boiler 3	118	lbs CO2e/ MM Btu	Based on AP-42 emission factor of 120 lbs/1000 scf of natural gas combusted. Potential annual emissions are highest with natural gas combustion because there are no fuel comubstion when burning nattural gas.
Boilers	Boilers 1 and 2			
Boilers	Boilers 1, 2, and 3			
A	DHT	118	lbs CO2e/ MM Btu	Based on AP-42 emission factor of 120 lbs/1000 scf of natural gas combusted.
A	DHU	118	lbs CO2e/ MM Btu	Based on AP-42 emission factor of 120 lbs/1000 scf of natural gas combusted.
A	DHZ	118	lbs CO2e/ MM Btu	Based on AP-42 emission factor of 120 lbs/1000 scf of natural gas combusted.
B	DUQ	118	lbs CO2e/ MM Btu	Based on AP-42 emission factor of 120 lbs/1000 scf of natural gas combusted.
B	DUT	118	lbs CO2e/ MM Btu	Based on AP-42 emission factor of 120 lbs/1000 scf of natural gas combusted.
B	DQA	118	lbs CO2e/ MM Btu	Based on AP-42 emission factor of 120 lbs/1000 scf of natural gas combusted.
B	DQB	118	lbs CO2e/ MM Btu	Based on AP-42 emission factor of 120 lbs/1000 scf of natural gas combusted.
B	DUV	118	lbs CO2e/ MM Btu	Based on AP-42 emission factor of 120 lbs/1000 scf of natural gas combusted.
C	AEV	118	lbs CO2e/ MM Btu	Based on AP-42 emission factor of 120 lbs/1000 scf of natural gas combusted.
C	CXX	118	lbs CO2e/ MM Btu	Based on AP-42 emission factor of 120 lbs/1000 scf of natural gas combusted.
C	CYY	118	lbs CO2e/ MM Btu	Based on AP-42 emission factor of 120 lbs/1000 scf of natural gas combusted.
C	CHX	118	lbs CO2e/ MM Btu	Based on AP-42 emission factor of 120 lbs/1000 scf of natural gas combusted.
C	CHY	118	lbs CO2e/ MM Btu	Based on AP-42 emission factor of 120 lbs/1000 scf of natural gas combusted.
C	CHZ	118	lbs CO2e/ MM Btu	Based on AP-42 emission factor of 120 lbs/1000 scf of natural gas combusted.
C	HEB	118	lbs CO2e/ MM Btu	Based on AP-42 emission factor of 120 lbs/1000 scf of natural gas combusted.
C	HNL	118	lbs CO2e/ MM Btu	Based on AP-42 emission factor of 120 lbs/1000 scf of natural gas combusted.
C	CBB	118	lbs CO2e/ MM Btu	Based on AP-42 emission factor of 120 lbs/1000 scf of natural gas combusted.
C	CTQ	118	lbs CO2e/ MM Btu	Based on AP-42 emission factor of 120 lbs/1000 scf of natural gas combusted.

Table C-18
CO2e Emission Factors

Production Process	Stack Identification Code	Annual Emissions		
		Emission Factor	Units	Basis for Factor
C	CTR	118	lbs CO2e/ MM Btu	Based on AP-42 emission factor of 120 lbs/1000 scf of natural gas combusted.
C	CTS	118	lbs CO2e/ MM Btu	Based on AP-42 emission factor of 120 lbs/1000 scf of natural gas combusted.
C	CTT	118	lbs CO2e/ MM Btu	Based on AP-42 emission factor of 120 lbs/1000 scf of natural gas combusted.
C	CNV	118	lbs CO2e/ MM Btu	Based on AP-42 emission factor of 120 lbs/1000 scf of natural gas combusted.
C	CNW	118	lbs CO2e/ MM Btu	Based on AP-42 emission factor of 120 lbs/1000 scf of natural gas combusted.
C	CTZ	118	lbs CO2e/ MM Btu	Based on AP-42 emission factor of 120 lbs/1000 scf of natural gas combusted.
C	TCD	118	lbs CO2e/ MM Btu	Based on AP-42 emission factor of 120 lbs/1000 scf of natural gas combusted.
C	TAC	118	lbs CO2e/ MM Btu	Based on AP-42 emission factor of 120 lbs/1000 scf of natural gas combusted.
C	TAH	118	lbs CO2e/ MM Btu	Based on AP-42 emission factor of 120 lbs/1000 scf of natural gas combusted.
Plant	Heaters	118	lbs CO2e/ MM Btu	Based on AP-42 emission factor of 120 lbs/1000 scf of natural gas combusted.

Table C-19
Estimated CO2e Emissions

Production Process	Stack Identification Code	Annual Emissions				
		Emission Factor	Emission Factor Units	Operating Rate	Operating Units	Annual Emissions, tpy
Boilers	Boiler 1	118	lbs CO2e/ MM Btu	483,700	MMBtu	28626.0
Boilers	Boiler 2	118	lbs CO2e/ MM Btu	666,662	MMBtu	39454.0
Boilers	Boiler 3	118	lbs CO2e/ MM Btu	342,078	MMBtu	20244.6
Boilers	Boilers 1 and 2					0.0
Boilers	Boilers 1, 2, and 3					0.0
A	DHT	118	lbs CO2e/ MM Btu	61,320	MMBtu	3629.0
A	DHU	118	lbs CO2e/ MM Btu	61,320	MMBtu	3629.0
A	DHZ	118	lbs CO2e/ MM Btu	52,560	MMBtu	3110.6
B	DUQ	118	lbs CO2e/ MM Btu	61,320	MMBtu	3629.0
B	DUT	118	lbs CO2e/ MM Btu	61,320	MMBtu	3629.0
B	DQA	118	lbs CO2e/ MM Btu	61,320	MMBtu	3629.0
B	DQB	118	lbs CO2e/ MM Btu	61,320	MMBtu	3629.0
B	DUV	118	lbs CO2e/ MM Btu	105,120	MMBtu	6221.1
C	AEV	118	lbs CO2e/ MM Btu	28,908	MMBtu	1710.8
C	CXX	118	lbs CO2e/ MM Btu	93,951	MMBtu	5560.1
C	CYY	118	lbs CO2e/ MM Btu	65,919	MMBtu	3901.2
C	CHX	118	lbs CO2e/ MM Btu	68,503	MMBtu	4054.1
C	CHY	118	lbs CO2e/ MM Btu	40,471	MMBtu	2395.1
C	CHZ	118	lbs CO2e/ MM Btu	19,798	MMBtu	1171.6
C	HEB	118	lbs CO2e/ MM Btu	94,433	MMBtu	5588.7
C	HNL	118	lbs CO2e/ MM Btu	28,207	MMBtu	1669.3
C	CBB	118	lbs CO2e/ MM Btu	13,140	MMBtu	777.6
C	CTQ	118	lbs CO2e/ MM Btu	35,097	MMBtu	2077.1
C	CTR	118	lbs CO2e/ MM Btu	57,715	MMBtu	3415.7
C	CTS	118	lbs CO2e/ MM Btu	76,931	MMBtu	4552.9
C	CTT	118	lbs CO2e/ MM Btu	84,971	MMBtu	5028.7
C	CNV	118	lbs CO2e/ MM Btu	105,120	MMBtu	6221.1
C	CNW	118	lbs CO2e/ MM Btu	105,120	MMBtu	6221.1
C	CTZ	118	lbs CO2e/ MM Btu	94,608	MMBtu	5599.0
C	TCD	118	lbs CO2e/ MM Btu	17,520	MMBtu	1036.9
C	TAC	118	lbs CO2e/ MM Btu	10,950	MMBtu	648.0
C	TAH	118	lbs CO2e/ MM Btu	10,950	MMBtu	648.0
Plant	Heaters	118	lbs CO2e/ MM Btu	679,561	MMBtu	40,217.4

APPENDIX D

IDENTIFICATION OF INSIGNIFICANT ACTIVITIES

The requirements listed below are judged inapplicable or not environmentally significant for the reasons listed. These requirements are listed in this permit application so that these determinations will be included within the Permit Shield.

Citation	Title	Basis
IDAPA 58.01.01.000 - 004	Legal Authority, Title and Scope; Written Interpretations, Administrative Appeals; Catchlines	Rule does not apply to stationary sources.
IDAPA 58.01.01.005 - 011	Definitions	Rule is not an operating requirement
IDAPA 58.01.01.106	Abbreviations	Rule is not an operating requirement
IDAPA 58.01.01.107	Incorporations by Reference	Rule is not an operating requirement
IDAPA 58.01.01.128	Compliance Requirements by Department	Rule is not an operating requirement
IDAPA 58.01.01.140-149	Variances	Rule is not an operating requirement
IDAPA 58.01.01.162	Modifying Physical Conditions	Rule does not apply to stationary sources.
IDAPA 58.01.01.163	Source Density	Rule does not apply to stationary sources.
IDAPA 58.01.01.204	Permit Requirements for New Major Facilities or Major Modifications in Non-Attainment Areas	Facility not in this geographic area
IDAPA 58.01.01.321-325	Tier I Operating Permit Content	Rule is not an operating requirement
IDAPA 58.01.01.335	General Tier I Operating Permits and Authorizations to Operate	Facility is not a source regulated by this rule
IDAPA 58.01.01.336	Tier I Permits for Portable Sources	Facility is not a source regulated by this rule
IDAPA 58.01.01.360-369	Standard Processing of Tier I Permit Applications	Rule is not an operating requirement
IDAPA 58.01.01.525-538	Registration and Registration Fees	Rule is an administrative requirement only and is not environmentally significant
IDAPA 58.01.01.550-560	Air Pollution Emergency Rule	Rule is not an operating requirement
IDAPA 58.01.01.578	Designation of Attainment, Unclassifiable, and Nonattainment Areas	Rule does not apply to stationary sources.
IDAPA 58.01.01.579-581	Prevention of Significant Deterioration rules	Facility is not a source regulated by this rule
IDAPA 58.01.01.214	Demonstration of Preconstruction Compliance for New and Reconstructed Major Sources of Hazardous Air Pollutants.	Facility is not a source regulated by this rule
IDAPA 58.01.01.224-228	Permit to Construct Application Fees	Rule is an administrative requirement only and is not environmentally significant
IDAPA 58.01.01.387-397	Tier I Registration Fees	Rule is an administrative requirement only and is not environmentally significant
IDAPA 58.01.01.470 (3-7-95)	Permit Application Fees for Tier II Permits (not in IDAPA 58.01 but in Approved SIP)	Rule is an administrative requirement only and is not environmentally significant

Citation	Title	Basis
IDAPA 58.01.01.563-574	Transportation Conformity	Facility is not a source regulated by this rule
IDAPA 58.01.01.582	Interim Conformity for Northern Ada County	Facility not in this geographic area
IDAPA 58.01.01.609-613, 615-616	Training Fires, Industrial Flares, Residential Solid Waste Disposal Fires, Landfill Disposal Site Fires, Orchard Fires, Dangerous Material Fires, Infectious Waste Burning	Facility is not a source regulated by this rule
IDAPA 58.01.01.626	General Restrictions on Emissions from Wigwam Burners	Facility is not a source regulated by this rule
IDAPA 58.01.01.750-751	Control of Fluoride Emissions	Pollutant not emitted by facility.
IDAPA 58.01.01.785-787	Control of Incinerators	Facility is not a source regulated by this rule
IDAPA 58.01.01.805-808	Control of Hot-mix Asphalt Plants	Facility is not a source regulated by this rule
IDAPA 58.01.01.815-826	Control of Kraft Pulping Mills	Facility is not a source regulated by this rule
IDAPA 58.01.01.835-839	Control of Rendering Plants	Facility is not a source regulated by this rule
IDAPA 58.01.01.845-848	Control of Sulfur Oxide Emissions from Sulfuric Acid Plants	Facility is not a source regulated by this rule
IDAPA 58.01.01.855-858	Combined Lead and Zinc Smelters	Facility is not a source regulated by this rule
IDAPA 58.01.01.859-860	Municipal Solid Waste Landfills	Facility is not a source regulated by this rule
IDAPA 58.01.01.861-862	Hospital/Medical/Infectious Waste Incinerators	Facility is not a source regulated by this rule
IDAPA 58.01.01.790-799	Nonmetallic Mineral Processing	Facility is not a source regulated by this rule
IDAPA 58.01.01.800-802	Permit by Rule Fees	Facility is not a source regulated by this rule
40 CFR Part 49	Tribal Clean Air Authority	Facility is not a source regulated by this rule
40 CFR Part 51	Requirements for preparation, adoption, and submittal of implementation plans	Rule does not apply to stationary sources.
40 CFR Part 55	Outer continental shelf air regulations	Facility not in this geographic area
40 CFR Part 56	Regional Consistency	Rule does not apply to stationary sources.
40 CFR Part 57	Nonferrous Smelter Rules	Facility is not a source regulated by this rule
40 CFR Part 59	National volatile organic compound emission standards for consumer and commercial products	Facility is not a source regulated by this rule
40 CFR Part 60, except Subparts A, Dc and appendices	Standards of performance for new stationary sources	Facility is not a source regulated by this rule
40 CFR 60.13(c), (d), (e), (h)	Monitoring Requirements. – all provisions related to Continuous Opacity Monitoring Systems	Facility has NSPS Subpart Dc Alternative to COMS approved by US EPA pursuant to 40 CFR 60.13(i).

Citation	Title	Basis
40 CFR 60.47c	Emission Monitoring for Particulate Matter	Facility has NSPS Subpart Dc Alternative to COMS approved by US EPA pursuant to 40 CFR 60.13(i).
40 CFR Part 61, except subpart A, M, and appendices	National emission standards for hazardous air pollutants	Facility is not a source regulated by this rule
40 CFR Part 62	Approval and promulgation of State plans for designated facilities and pollutants	Facility is not a source regulated by this rule
40 CFR Part 63	National emission standards for hazardous air pollutants for source categories	Facility is not a source regulated by this rule
40 CFR Part 67	EPA approval of State noncompliance penalty program	Rule does not apply to stationary sources.
40 CFR Part 71	Federal operating permit programs	Facility is not a source regulated by this rule
40 CFR Part 72	Permits regulation	Facility is not a source regulated by this rule
40 CFR Part 73	Sulfur dioxide allowance system	Facility is not a source regulated by this rule
40 CFR Part 74	Sulfur dioxide opt-ins	Facility is not a source regulated by this rule
40 CFR Part 75	Continuous emission monitoring	Facility is not a source regulated by this rule
40 CFR Part 76	Acid rain nitrogen oxides emission reduction program	Facility is not a source regulated by this rule
40 CFR Part 77	Excess emissions	Facility is not a source regulated by this rule
40 CFR Part 78	Appeal procedures for Acid Rain Program	Facility is not a source regulated by this rule
40 CFR Part 79	Registration of fuels and fuel additives	Facility is not a source regulated by this rule
40 CFR Part 80	Regulation of fuels and fuel additives	Facility is not a source regulated by this rule
40 CFR Part 81	Designation of areas for air quality planning purposes	Rule does not apply to stationary sources.
40 CFR Part 82, except Subpart F	Stratospheric Ozone Protection	Facility is not a source regulated by this rule
40 CFR Part 85	Control of air pollution from mobile sources	Rule does not apply to stationary sources.
40 CFR Part 86	Control of emissions from new and in-use highway vehicles and engines	Rule does not apply to stationary sources.
40 CFR Part 87	Control of air pollution from aircraft and aircraft engines	Rule does not apply to stationary sources.
40 CFR Part 88	Clean-fuel vehicles	Rule does not apply to stationary sources.
40 CFR Part 89	Control of emissions from new and in-use nonroad compression-ignition engines	Rule does not apply to stationary sources.
40 CFR Part 90	Control of emissions from nonroad spark-ignition engines at or below 19 kilowatts	Rule does not apply to stationary sources.
40 CFR Part 91	Control of emissions from marine spark-ignition engines	Rule does not apply to stationary sources.
40 CFR Part 92	Control of emissions from locomotives and locomotive engines	Rule does not apply to stationary sources.

Citation	Title	Basis
40 CFR Part 93	Determining conformity of Federal actions to State or Federal implementation plans	Rule does not apply to stationary sources.
40 CFR Part 94	Control of air pollution from marine compression-ignition engines	Rule does not apply to stationary sources.
40 CFR Part 96	NOX Budget Trading Program for State Implementation Plans	Facility is not a source regulated by this rule
40 CFR Part 97	Federal NOX Budget Trading Program	Facility is not a source regulated by this rule

APPENDIX E

DEQ FORM FRA AND REGULATORY ANALYSIS FOR GHG TAILORING RULE AND BOILER MACT

DEQ AIR QUALITY PROGRAM
1410 N. Hilton, Boise, ID 83706
For assistance, call the
Air Permit Hotline – 1-877-5PERMIT

AIR PERMIT APPLICATION

Revision 6
10/7/09

For each box in the table below, CTRL+click on the blue underlined text for instructions and information.

IDENTIFICATION	
1. Company Name: Basic American Foods	2. Facility Name: Blackfoot Facility
3. Brief Project Description: Tier I Permt Renewal	

APPLICABILITY DETERMINATION	
4. List applicable subparts of the New Source Performance Standards (NSPS) (40 CFR part 60). Examples of NSPS affected emissions units include internal combustion engines, boilers, turbines, etc. The applicant must thoroughly review the list of affected emissions units.	List of applicable subpart(s): Subpart Dc – Applicability previously reviewed. ("Air Quality Permitting Statement of Basis, September 12, 2005, Permit to Construct No. P-050301 and Tier I Operating Permit No. T1-050308, Basic American Foods, Blackfoot, ID") ☐ Not Applicable
5. List applicable subpart(s) of the National Emission Standards for Hazardous Air Pollutants (NESHAP) found in 40 CFR part 61 and 40 CFR part 63. Examples of affected emission units include solvent cleaning operations, industrial cooling towers, paint stripping and miscellaneous surface coating. EPA has a web page dedicated to NESHAP that should be useful to applicants.	List of applicable subpart(s): 40 CFR 63, Subpart JJJJJJ. Detailed regulatory analysis included in Appendix B of Tier I Permit Renewal Application ☐ Not Applicable
6. For each subpart identified above, conduct a complete a regulatory analysis using the instructions and referencing the example provided on the following pages. **Note** - Regulatory reviews must be submitted with sufficient detail so that DEQ can verify applicability and document in legal terms why the regulation applies. Regulatory reviews that are submitted with insufficient detail will be determined incomplete.	☑ A detailed regulatory review is provided (Follow instructions and example). ☑ DEQ has already been provided a detailed regulatory review. Give a reference to the document including the date.

IF YOU ARE UNSURE HOW TO ANSWER ANY OF THESE QUESTIONS, CALL THE AIR PERMIT HOTLINE AT 1-877-5PERMIT

It is emphasized that it is the applicant's responsibility to satisfy all technical and regulatory requirements, and that DEQ will help the applicant understand what those requirements are prior to the application being submitted but that DEQ will not perform the required technical or regulatory analysis on the applicant's behalf.

REGULATORY ANALYSIS FOR GHG TAILORING RULE

PART 52—[AMENDED]

Subpart A—[Amended]

§ 52.21 Prevention of significant deterioration of air quality.

* * * * *

(b) * * *

---

(49) *Subject to regulation* means, for any air pollutant, that the pollutant is subject to either a provision in the Clean Air Act, or a nationally-applicable regulation codified by the Administrator in subchapter C of this chapter, that requires actual control of the quantity of emissions of that pollutant, and that such a control requirement has taken effect and is operative to control, limit or restrict the quantity of emissions of that pollutant released from the regulated activity. Except that: (i) *Greenhouse gases (GHGs),* the air pollutant defined in § 86.1818–12(a) of this chapter as the aggregate group of six greenhouse gases: Carbon dioxide, nitrous oxide, methane, hydrofluorocarbons, perfluorocarbons, and sulfur hexafluoride, shall not be subject to regulation except as provided in paragraphs (b)(49)(iv) through (v) of this section. (ii) For purposes of paragraphs (b)(49)(iii) through (v) of this section, the term tpy *CO_2 equivalent emissions (CO_2e)* shall represent an amount of GHGs emitted, and shall be computed as follows:

(*a*) Multiplying the mass amount of emissions (tpy), for each of the six greenhouse gases in the pollutant GHGs, by the gas's associated global warming potential published at Table A–1 to subpart A of part 98 of this chapter— Global Warming Potentials.

(*b*) Sum the resultant value from paragraph (b)(49)(ii)(*a*) of this section for each gas to compute a tpy CO_2e.

(iii) The term *emissions increase* as used in paragraphs (b)(49)(iv) through (v) of this section shall mean that both a significant emissions increase (as calculated using the procedures in paragraph (a)(2)(iv) of this section) and a significant net emissions increase (as defined in paragraphs (b)(3) and (b)(23) of this section) occur. For the pollutant GHGs, an emissions increase shall be based on tpy CO_2e, and shall be calculated assuming the pollutant GHGs is a regulated NSR pollutant, and "significant" is defined as 75,000 tpy CO_2e instead of applying the value in paragraph (b)(23)(ii) of this section.

These provisions are definitions and do not create any requirements.

(iv) Beginning January 2, 2011, the pollutant GHGs is subject to regulation if:

(*a*) The stationary source is a new major stationary source for a regulated NSR pollutant that is not GHGs, and also will emit or will have the potential to emit 75,000 tpy CO_2e or more; or

(*b*) The stationary source is an existing major stationary source for a regulated NSR pollutant that is not GHGs, and also will have an emissions increase of a regulated NSR pollutant, and an emissions increase of 75,000 tpy CO_2e or more; and,

These provisions are not applicable because the Blackfoot Facility is neither a new or existing major stationary source.

(v) Beginning July 1, 2011, in addition to the provisions in paragraph (b)(49)(iv) of this section, the pollutant GHGs shall also be subject to regulation

(*a*) At a new stationary source that will emit or have the potential to emit 100,000 tpy CO_2e; or

(*b*) At an existing stationary source that emits or has the potential to emit 100,000 tpy CO_2e, when such stationary source undertakes a physical change or change in the method of operation that will result in an emissions increase of 75,000 tpy CO_2e or more.

This rule is not applicable because since the tailoring rule was enacted the Blackfoot plant has not had any physical changes or changes in the method of operation resulting in an emissions of 75,000 tpy or more of CO2e.

PART 70—[AMENDED]

■7. Section 70.2 is amended:

■a. By revising the introductory text of paragraph (2) of the definition for "major source"; and

■b. By adding a definition for "Subject to regulation" in alphabetical order.

The revision and addition read as follows:

§ 70.2 Definitions.

* * * * *

Major source * * *

(2) A major stationary source of air pollutants, as defined in section 302 of the Act, that directly emits, or has the potential to emit, 100 tpy or more of any air pollutant subject to regulation (including any major source of fugitive emissions of any such pollutant, as determined by rule by the Administrator). The fugitive emissions of a stationary source shall not be considered in determining whether it is a major stationary source for the purposes of section 302(j) of the Act, unless the source belongs to one of the following categories of stationary source:

* * * * *

Subject to regulation means, for any air pollutant, that the pollutant is subject to either a provision in the Clean Air Act, or a nationally-applicable regulation codified by the Administrator in subchapter C of this chapter, that requires actual control of the quantity of emissions of that pollutant, and that such a control requirement has taken effect and is operative to control, limit or restrict the quantity of emissions of that pollutant released from the regulated activity. Except that:

(1) *Greenhouse gases (GHGs)*, the air pollutant defined in § 86.1818–12(a) of this chapter as the aggregate group of six greenhouse gases: carbon dioxide, nitrous oxide, methane, hydrofluorocarbons, perfluorocarbons, and sulfur hexafluoride, shall not be subject to regulation unless, as of July 1, 2011, the GHG emissions are at a stationary source emitting or having the potential to emit 100,000 tpy CO_2 equivalent emissions.

(2) The term *tpy CO_2 equivalent emissions (CO_2e)* shall represent an amount of GHGs emitted, and shall be computed by multiplying the mass amount of emissions (tpy), for each of the six greenhouse gases in the pollutant GHGs, by the gas's associated global warming potential published at Table A–1 to subpart A of part 98 of this chapter—Global Warming Potentials, and summing the resultant value for each to compute a tpy CO_2e.

Because the Blackfoot Facility has potential GHG emissions greater than 100,000 tpy, GHGs are a "regulated air pollutant" for the Blackfoot Facility.

REGULATORY ANALYSIS FOR BOILER MACT

Title 40: Protection of Environment
PART 63—NATIONAL EMISSION STANDARDS FOR HAZARDOUS AIR POLLUTANTS FOR SOURCE CATEGORIES (CONTINUED)

Subpart JJJJJJ—National Emission Standards for Hazardous Air Pollutants for Industrial, Commercial, and Institutional Boilers Area Sources

---

§ 63.11193 Am I subject to this subpart?

You are subject to this subpart if you own or operate an industrial, commercial, or institutional boiler as defined in §63.11237 that is located at, or is part of, an area source of hazardous air pollutants (HAP), as defined in §63.2, except as specified in §63.11195.

The Blackfoot Facility meets criteria to be subject to this subpart because it is an area source of HAP and has boilers that are not elsewhere exempted from the rule.

---

§ 63.11194 What is the affected source of this subpart?

(a) This subpart applies to each new, reconstructed, or existing affected source as defined in paragraphs (a)(1) and (2) of this section.

...

(b) An affected source is an existing source if you commenced construction or reconstruction of the affected source on or before June 4, 2010.

The oil-fired boilers at the Blackfoot Facility are included in this definition of an "affected source".

...

(e) If you are an owner or operator of an area source subject to this subpart, you are exempt from the obligation to obtain a permit under 40 CFR part 70 or part 71 as a result of this subpart. You may, however, be required to obtain a title V permit due to another reason or reasons. *See* 40 CFR 70.3(a) and (b) or 71.3(a) and (b). Notwithstanding the exemption from title V permitting for area sources under this subpart, you must continue to comply with the provisions of this subpart.

The Blackfoot Facility is required to obtain a Part 70 permit for other reasons.

---

§ 63.11195 Are any boilers not subject to this subpart?

...

No applicable content in this section.

§ 63.11196 What are my compliance dates?

(a) If you own or operate an existing affected boiler, you must achieve compliance with the applicable provisions in this subpart as specified in paragraphs (a)(1) through (3) of this section.

(1) If the existing affected boiler is subject to a work practice or management practice standard of a tune-up, you must achieve compliance with the work practice or management standard no later than March 21, 2012.

(2) If the existing affected boiler is subject to emission limits, you must achieve compliance with the emission limits no later than March 21, 2014.

(3) If the existing affected boiler is subject to the energy assessment requirement, you must achieve compliance with the energy assessment requirement no later than March 21, 2014.

The Blackfoot Facility is subject to (1) and (3), the tune-up and the energy assessment requirements.

...

Emission Limits, Work Practice Standards, Emission Reduction Measures, and Management Practices

§ 63.11200 What are the subcategories of boilers?

The subcategories of boilers are coal, biomass, and oil. Each subcategory is defined in §63.11237.

The Blackfoot Facility boilers are included in the oil subcategory.

---

§ 63.11201 What standards must I meet?

(a) You must comply with each emission limit specified in Table 1 to this subpart that applies to your boiler.

(b) You must comply with each work practice standard, emission reduction measure, and management practice specified in Table 2 to this subpart that applies to your boiler. An energy assessment completed on or after January 1, 2008 that meets the requirements in Table 2 to this subpart satisfies the energy assessment portion of this requirement.

(c) You must comply with each operating limit specified in Table 3 to this subpart that applies to your boiler.

(d) These standards apply at all times.

Table 2 is applicable to the Blackfoot Facility boilers. Tables 1 and 3 are not applicable because the Blackfoot Facility boilers do not combust any of the fuel types that are regulated in those tables.

General Compliance Requirements

§ 63.11205 What are my general requirements for complying with this subpart?

(a) At all times you must operate and maintain any affected source, including associated air pollution control equipment and monitoring equipment, in a manner consistent with safety and good air pollution control practices for minimizing emissions. The general duty to minimize emissions does not require you to make any further efforts to reduce emissions

if levels required by this standard have been achieved. Determination of whether such operation and maintenance procedures are being used will be based on information available to the Administrator that may include, but is not limited to, monitoring results, review of operation and maintenance procedures, review of operation and maintenance records, and inspection of the source.

The Blackfoot Facility boilers are subject to this general duty clause.

...

Initial Compliance Requirements

§ 63.11210 What are my initial compliance requirements and by what date must I conduct them?

...

(c) For existing affected boilers that have applicable work practice standards, management practices, or emission reduction measures, you must demonstrate initial compliance no later than the compliance date that is specified in §63.11196 and according to the applicable provisions in §63.7(a)(2).

This provision is applicable to the Blackfoot Facility boilers.

...

§ 63.11214 How do I demonstrate initial compliance with the work practice standard, emission reduction measures, and management practice?

(c) If you own or operate an existing affected boiler with a heat input capacity of 10 million Btu per hour or greater, you must submit a signed certification in the Notification of Compliance Status report that an energy assessment of the boiler and its energy use systems was completed and submit, upon request, the energy assessment report.

The Blackfoot Facility is subject to this requirement.

Continuous Compliance Requirements

§ 63.11220 When must I conduct subsequent performance tests?

...

None of the Blackfoot Facility boilers are subject to performance testing requirements under this rule.

---

§ 63.11221 How do I monitor and collect data to demonstrate continuous compliance?

...

None of the Blackfoot Facility boilers are subject to the continuous compliance data collection requirements under this rule.

§ 63.11222 How do I demonstrate continuous compliance with the emission limits?

...

None of the Blackfoot Facility boilers are subject to emission limits under this rule.

---

§ 63.11223 How do I demonstrate continuous compliance with the work practice and management practice standards?

(a) For affected sources subject to the work practice standard or the management practices of a tune-up, you must conduct a biennial performance tune-up according to paragraphs (b) of this section and keep records as required in §63.11225(c) to demonstrate continuous compliance. Each biennial tune-up must be conducted no more than 25 months after the previous tune-up.

(b) You must conduct a tune-up of the boiler biennially to demonstrate continuous compliance as specified in paragraphs (b)(1) through (7) of this section.

(1) As applicable, inspect the burner, and clean or replace any components of the burner as necessary (you may delay the burner inspection until the next scheduled unit shutdown, but you must inspect each burner at least once every 36 months).

(2) Inspect the flame pattern, as applicable, and adjust the burner as necessary to optimize the flame pattern. The adjustment should be consistent with the manufacturer's specifications, if available.

(3) Inspect the system controlling the air-to-fuel ratio, as applicable, and ensure that it is correctly calibrated and functioning properly.

(4) Optimize total emissions of carbon monoxide. This optimization should be consistent with the manufacturer's specifications, if available.

(5) Measure the concentrations in the effluent stream of carbon monoxide in parts per million, by volume, and oxygen in volume percent, before and after the adjustments are made (measurements may be either on a dry or wet basis, as long as it is the same basis before and after the adjustments are made).

(6) Maintain onsite and submit, if requested by the Administrator, biennial report containing the information in paragraphs (b)(6)(i) through (iii) of this section.

(i) The concentrations of CO in the effluent stream in parts per million, by volume, and oxygen in volume percent, measured before and after the tune-up of the boiler.

(ii) A description of any corrective actions taken as a part of the tune-up of the boiler.

(iii) The type and amount of fuel used over the 12 months prior to the biennial tune-up of the boiler.

(7) If the unit is not operating on the required date for a tune-up, the tune-up must be conducted within one week of startup.

The Blackfoot Facility is subject to these provisions.

---

§ 63.11224 What are my monitoring, installation, operation, and maintenance requirements?

(a) If your boiler is subject to a carbon monoxide emission limit in Table 1 to this subpart, you must install, operate, and maintain a continuous oxygen monitor according to the procedures in paragraphs (a)(1) through (6) of this section by the compliance date specified in §63.11196. The oxygen level shall be monitored at the outlet of the boiler.

...

The Blackfoot Facility is not subject to a carbon monoxide emission limit under this rule.

(b) If you are using a control device to comply with the emission limits specified in Table 1 to this subpart, you must maintain each operating limit in Table 3 to this subpart that applies to your boiler as specified in Table 7 to this subpart. If you use a control device not covered in Table 3 to this subpart, or you wish to establish and monitor an alternative operating limit and alternative monitoring parameters, you must apply to the United States Environmental Protection Agency (EPA) Administrator for approval of alternative monitoring under §63.8(f).

...

The Blackfoot Facility is not subject to a Table 1 emission limit under this rule.

(c) If you demonstrate compliance with any applicable emission limit through stack testing and subsequent compliance with operating limits, you must develop a site-specific monitoring plan according to the requirements in paragraphs (c)(1) through (4) of this section. This requirement also applies to you if you petition the EPA Administrator for alternative monitoring parameters under §63.8(f).

...

The Blackfoot Facility is not subject under this rule to an emission limit requiring stack testing and subsequent compliance with operating limits.

(d) If you have an operating limit that requires the use of a CMS, you must install, operate, and maintain each continuous parameter monitoring system according to the procedures in paragraphs (d)(1) through (5) of this section.

...

The Blackfoot Facility is not subject under this rule to an operating limit requiring the use of a CMS.

(e) If you have an applicable opacity operating limit under this rule, you must install, operate, certify and maintain each continuous opacity monitoring system (COMS) according to the procedures in paragraphs (e)(1) through (7) of this section by the compliance date specified in §63.11196.

...

The Blackfoot Facility is not subject under this rule to an applicable opacity operating limit.

(f) If you use a fabric filter bag leak detection system to comply with the requirements of this subpart, you must install, calibrate, maintain, and continuously operate the bag leak detection system as specified in paragraphs (f)(1) through (8) of this section.

...

The Blackfoot Facility is not subject under this rule to using fabric filter bag to comply with the requirements of this subpart.

---

§ 63.11225 What are my notification, reporting, and recordkeeping requirements?

(a) You must submit the notifications specified in paragraphs (a)(1) through (a)(5) of this section to the delegated authority.

(1) You must submit all of the notifications in §§63.7(b); 63.8(e) and (f); 63.9(b) through (e); and 63.9(g) and (h) that apply to you by the dates specified in those sections.

(2) As specified in §63.9(b)(2), you must submit the Initial Notification no later than 120 calendar days after May 20, 2011 or within 120 days after the source becomes subject to the standard.

Under this rule, the Blackfoot Facility is subject to the notification, reporting, and recordkeeping provisions of 63.9(b) through (d) and (h).

---

(3) If you are required to conduct a performance stack test you must submit a Notification of Intent to conduct a performance test at least 60 days before the performance stack test is scheduled to begin.

(4) You must submit the Notification of Compliance Status in accordance with §63.9(h) no later than 120 days after the applicable compliance date specified in §63.11196 unless you must conduct a performance stack test. If you must conduct a performance stack test, you must submit the Notification of Compliance Status within 60 days of completing the performance stack test. In addition to the information required in §63.9(h)(2), your notification must include the following certification(s) of compliance, as applicable, and signed by a responsible official:

(i) "This facility complies with the requirements in §63.11214 to conduct an initial tune-up of the boiler."

(ii) "This facility has had an energy assessment performed according to §63.11214(c)."

...

The Blackfoot Facility is subject to the notification requirements of subparagraph (4). Subparagraph (3) is not applicable because the Blackfoot Facility is not required to conduct performance tests under this rule.

(b) You must prepare, by March 1 of each year, and submit to the delegated authority upon request, an annual compliance certification report for the previous calendar year containing the information specified in paragraphs (b)(1) through (4) of this section. You must submit the report by March 15 if you had any instance described by paragraph (b)(3) of this section. For boilers that are subject only to a requirement to conduct a biennial tune-up according to §63.11223(a) and not subject to emission limits or operating limits, you may prepare only a biennial compliance report as specified in paragraphs (b)(1) through (4) of this section, instead of a semi-annual compliance report.

(1) Company name and address.

(2) Statement by a responsible official, with the official's name, title, phone number, e-mail address, and signature, certifying the truth, accuracy and completeness of the notification and a statement of whether the source has complied with all the relevant standards and other requirements of this subpart.

(3) If the source experiences any deviations from the applicable requirements during the reporting period, include a description of deviations, the time periods during which the deviations occurred, and the corrective actions taken.

(4) The total fuel use by each affected boiler subject to an emission limit, for each calendar month within the reporting period, including, but not limited to, a description of the fuel, whether the fuel has received a non-waste determination by you or EPA through a petition process to be a non-waste under §241.3(c), whether the fuel(s) were processed from discarded non-hazardous secondary materials within the meaning of §241.3, and the total fuel usage amount with units of measure.

The Blackfoot Facility is subject to the compliance certification requirements of paragraph (b).

(c) You must maintain the records specified in paragraphs (c)(1) through (5) of this section.

(1) As required in §63.10(b)(2)(xiv), you must keep a copy of each notification and report that you submitted to comply with this subpart and all documentation supporting any Initial Notification or Notification of Compliance Status that you submitted.

(2) You must keep records to document conformance with the work practices, emission reduction measures, and management practices required by §63.11214 as specified in paragraphs (c)(2)(i) and (ii) of this section.

(i) Records must identify each boiler, the date of tune-up, the procedures followed for tune-up, and the manufacturer's specifications to which the boiler was tuned.

(ii) Records documenting the fuel type(s) used monthly by each boiler, including, but not limited to, a description of the fuel, including whether the fuel has received a non-waste determination by you or EPA, and the total fuel usage amount with units of measure. If you combust non-hazardous secondary materials that have been determined not to be solid waste pursuant to §241.3(b)(1), you must keep a record which documents how the secondary material meets each of the legitimacy criteria. If you combust a fuel that has been processed from a discarded non-hazardous secondary material pursuant to §241.3(b)(4), you must keep records as to how the operations that produced the fuel satisfies the definition of processing in §241.2. If the fuel received a non-waste determination pursuant to the petition process submitted under §241.3(c), you must keep a record that documents how the fuel satisfies the requirements of the petition process.

(3) For sources that demonstrate compliance through fuel analysis, a copy of all calculations and supporting documentation that were done to demonstrate compliance with the mercury emission limits. Supporting documentation should include results of any fuel analyses. You can use the results from one fuel analysis for multiple boilers provided they are all burning the same fuel type.

(4) Records of the occurrence and duration of each malfunction of the boiler, or of the associated air pollution control and monitoring equipment.

(5) Records of actions taken during periods of malfunction to minimize emissions in accordance with the general duty to minimize emissions in §63.11205(a), including corrective actions to restore the malfunctioning boiler, air pollution control, or monitoring equipment to its normal or usual manner of operation.

...

The Blackfoot Facility is subject to the underlined recordkeeping requirements of paragraph (b).

(d) Your records must be in a form suitable and readily available for expeditious review, according to §63.10(b)(1). As specified in §63.10(b)(1), you must keep each record for 5 years following the date of each recorded action. You must keep each record onsite for at least 2 years after the date of each recorded action according to §63.10(b)(1). You may keep the records off site for the remaining 3 years.

(e) As of January 1, 2012 and within 60 days after the date of completing each performance test, as defined in §63.2, conducted to demonstrate compliance with this subpart, you must submit relative accuracy test audit (i.e., reference method) data and performance test (i.e., compliance test) data, except opacity data, electronically to EPA's Central Data Exchange (CDX) by using the Electronic Reporting Tool (ERT) (*see http://www.epa.gov/ttn/chief/ert/ert tool.html/*) or other compatible electronic spreadsheet. Only data collected using test methods compatible with ERT are subject to this requirement to be submitted electronically into EPA's WebFIRE database.

(f) If you intend to commence or recommence combustion of solid waste, you must provide 30 days prior notice of the date upon which you will commence or recommence combustion of solid waste. The notification must identify:

(1) The name of the owner or operator of the affected source, the location of the source, the boiler(s) that will commence burning solid waste, and the date of the notice.

(2) The currently applicable subcategory under this subpart.

(3) The date on which you became subject to the currently applicable emission limits.

(4) The date upon which you will commence combusting solid waste.

(g) If you intend to switch fuels, and this fuel switch may result in the applicability of a different subcategory or a switch out of subpart JJJJJJ due to a switch to 100 percent natural gas, you must provide 30 days prior notice of the date upon which you will switch fuels. The notification must identify:

(1) The name of the owner or operator of the affected source, the location of the source, the boiler(s) that will switch fuels, and the date of the notice.

(2) The currently applicable subcategory under this subpart.

(3) The date on which you became subject to the currently applicable standards.

(4) The date upon which you will commence the fuel switch.

Paragraph (e) is not applicable because the Blackfoot Facility is not required to conduct performance testing under this rule. Paragraph is not applicable because the Blackfoot Facility has no capability to combust solid waste. Paragraphs (d) and (g) are applicable.

---

§ 63.11226 How can I assert an affirmative defense if I exceed an emission limit during a malfunction?

In response to an action to enforce the standards set forth in paragraph §63.11201 you may assert an affirmative defense to a claim for civil penalties for exceedances of numerical emission limits that are caused by malfunction, as defined at §63.2. Appropriate penalties may be assessed, however, if you fail to meet your burden of proving all of the requirements in the affirmative defense. The affirmative defense shall not be available for claims for injunctive relief.

...

The Blackfoot Facility is not subject to this provision because the facility does not have numeric emission limits under this rule.

Other Requirements and Information

§ 63.11235 What parts of the General Provisions apply to me?

Table 8 to this subpart shows which parts of the General Provisions in §§63.1 through 63.15 apply to you.

Table 8 is shown at the end of this analysis.

Table 1 to Subpart JJJJJJ of Part 63—Emission Limits

As stated in §63.11201, you must comply with the following applicable emission limits:

...

Table 1 is not applicable because the Blackfoot Facility does not have any boilers in any of the subcategories listed in Table 1.

Table 2 to Subpart JJJJJJ of Part 63—Work Practice Standards, Emission Reduction Measures, and Management Practices

As stated in §63.11201, you must comply with the following applicable work practice standards, emission reduction measures, and management practices:

If your boiler is in this subcategory...	You must meet the following...
...	...
4. Existing coal, biomass, or oil (units with heat input capacity of 10 million Btu per hour and greater)	Must have a one-time energy assessment performed by a qualified energy assessor. An energy assessment completed on or after January 1, 2008, that meets or is amended to meet the energy assessment requirements in this table satisfies the energy assessment requirement. The energy assessment must include: (1) A visual inspection of the boiler system, (2) An evaluation of operating characteristics of the facility, specifications of energy using systems, operating and maintenance procedures, and unusual operating constraints, (3) Inventory of major systems consuming energy from affected boiler(s), (4) A review of available architectural and engineering plans, facility operation and maintenance procedures and logs, and fuel usage, (5) A list of major energy conservation measures, (6) A list of the energy savings potential of the energy conservation measures identified, (7) A comprehensive report detailing the ways to improve efficiency, the cost of specific improvements, benefits, and the time frame for recouping those investments.

The Blackfoot Facility boilers existing oil-fired units and thus are subject to the provisions of row 4 of Table 2.

Table 3 to Subpart JJJJJJ of Part 63—Operating Limits for Boilers With Emission Limits

As stated in §63.11201, you must comply with the applicable operating limits:

...

Table 3 is not applicable because the Blackfoot Facility does not have any boilers in with emission limits under this rule.

Table 4 to Subpart JJJJJJ of Part 63—Performance (Stack) Testing Requirements

As stated in §63.11212, you must comply with the following requirements for performance (stack) test for affected sources:

...

Table 4 is not applicable because the Blackfoot Facility does not have any requirements to conduct performance testing under this rule.

Table 5 to Subpart JJJJJJ of Part 63—Fuel Analysis Requirements

As stated in §63.11213, you must comply with the following requirements for fuel analysis testing for affected sources:

...

Table 5 is not applicable because the Blackfoot Facility does not have any requirements to conduct fuel analysis under this rule.

Table 6 to Subpart JJJJJJ of Part 63—Establishing Operating Limits

As stated in §63.11211, you must comply with the following requirements for establishing operating limits:

...

Table 6 is not applicable because the Blackfoot Facility does not have any required operating limits created by this rule.

Table 7 to Subpart JJJJJJ of Part 63—Demonstrating Continuous Compliance

As stated in §63.11222, you must show continuous compliance with the emission limitations for affected sources according to the following:

...

Table 7 is not applicable because the Blackfoot Facility does not have any required emission limits created by this rule.

APPENDIX F

COMPLIANCE CERTIFICATIONS AND DEMONSTRATION METHODOLOGIES

The following table presents compliance information for each identified applicable requirement that specifically limits emissions either directly via a numeric emission limit or indirectly via an operating requirement or required work practice standard. The information presented includes:

- A citation to the requirement
- A description of the requirement
- A certifications of current compliance status
- The methods used to establish current compliance status
- The methods proposed to be used to demonstrate compliance during the permit term
- The proposed frequency at which compliance determinations will be made during the permit term.

When more than one applicable requirement addresses the same parameters for the same source, the table aggregates together the separate requirements into one entry on the table.

Information is included only for requirements that specifically limit or control emissions from a source or group of sources. Monitoring and recordkeeping requirements are not included in this discussion as these would be embodied in the compliance determination methodologies for the associated emissions limits or work standards. Generic emissions limits, such as control of odors (IDAPA 58.01.01, Section 776), are not included in this review unless those requirements have been made specifically enforceable to an emissions unit or units in a permit, order, or similar document.

COMPLIANCE CERTIFICATIONS AND CURRENT AND PROPOSED COMPLIANCE DETERMINATION METHODS

DESCRIPTION OF REQUIREMENT			COMPLIANCE DETERMINATION		
CITATION	REQUIREMENT	CURRENTLY IN COMPLIANCE?	CURRENT	PROPOSED FOR PERMIT TERM	PROPOSED FREQUENCY OF DETERMINATION
		PLANTWIDE ACTIVITIES			
Permit No. P-2009.0043, Condition 3.1	Comply with the terms and conditions of this permit and the requirements of IDAPA 58.01.01.181 when making changes to the facility that increase emissions of criteria pollutants.	Yes	Review of changes through review of capital projects and periodic audits of facilities and operations.	Review of changes through review of capital projects and periodic audits of facilities and operations.	Annual
Permit No. P-2009.0043, Condition 3.3	Plantwide emissions (in tons per rolling 12-month period) shall not exceed the facility emissions cap (FEC) limits listed below: PM-10 128 SO_2 161 NO_x 235 CO 235 VOC 5.1	Yes	Review of rolling 12-month calculations of plant emissions maintained per Permit No. P-2009.0043, Condition 3.4	Review of rolling 12-month calculations of plant emissions maintained per Permit No. P-2009.0043, Condition 3.4	Monthly
Permit No. P-2009.0043, Condition 3.5	Maintain documentation of compliance with the requirements of IDAPA 58.01.01.210 for any modifications made to the facility after the issuance date of this permit that may increase toxic air pollutants.	Yes	Review of changes through review of capital projects and periodic audits of facilities and operations.	Review of changes through review of capital projects and periodic audits of facilities and operations.	Annual
Permit No. P-2009.0043, Condition 8.4	The permittee shall not discharge any air pollutant to the atmosphere from a space heater for a period or periods aggregating more than three minutes in any 60-minute period which is greater than 20% opacity as determined by procedures contained in IDAPA 58.01.01.625. These provisions shall not apply when the presence of uncombined water, nitrogen oxides, and/or chlorine gas are the only reason(s) for the failure of the emission to comply with the requirements of this section.	Yes	Periodic observation of site emissions points for visible emissions. Note that space heaters are direct fired and do not have a stacks from which visible emissions might be observed.	Observation of site emissions points for visible emissions.	Quarterly
Permit No. P-2009.0043, Condition 9.1	Implement the compliance requirements described for removing stacks and raising stacks as specified in Conditions 9.2 and 9.3 of Permit No. P-2009.0043. Any changes in the methods proposed or timeframes specified must be approved by DEQ prior to implementation. Upon issuance of this Tier II operating permit, the Permittee has three years to comply with the following permit requirements.	Yes	Not applicable. The deadline for completing these actions is January 20, 2014..	Review the status of the compliance program.	Annual

COMPLIANCE CERTIFICATIONS AND CURRENT AND PROPOSED COMPLIANCE DETERMINATION METHODS

DESCRIPTION OF REQUIREMENT		CURRENTLY IN COMPLIANCE?	COMPLIANCE DETERMINATION		
CITATION	REQUIREMENT		CURRENT	PROPOSED FOR PERMIT TERM	PROPOSED FREQUENCY OF DETERMINATION
Permit No. P-2009.0043, Condition 9.4	The exhaust stacks presented in both the exhaust stacks proposed for removal and the exhaust stacks proposed for increased stack heights Permit Conditions shall be identified in a manner that will allow a DEQ representative to positively identify each individual stack.	Yes	Visual Inspection	Visual inspection	Annual
	BOILERS				
PTC No. P-050301, Condition 2.1	Emissions of PM-10 shall not exceed: Source / lb/hr / T/yr Boiler 1 / --- / --- Boiler 2 / --- / --- Boiler 3 / 0.3 / --- Combined Emissions from Boilers 1 and 2 / 5.7 / --- Combined Emissions from Boilers 1, 2 and 3 / --- / 18.3	Yes	• Rolling 12-month calculations of plant emissions maintained per Permit No. P-2009.0043, Condition 3.4; • Boiler operating logs of steam production and fuel usage • Results of performance tests for particulates • Maintenance and operation of a wet scrubber system in accordance with provisions of PTC No. P-050301 • Annual boiler tuning	• Rolling 12-month calculations of plant emissions maintained per Permit No. P-2009.0043, Condition 3.4; • Boiler operating logs of steam production and fuel usage • Results of performance tests for particulates • Maintenance and operation of a wet scrubber system in accordance with provisions of PTC No. P-050301 • Annual boiler tuning	Monthly

COMPLIANCE CERTIFICATIONS AND CURRENT AND PROPOSED COMPLIANCE DETERMINATION METHODS

DESCRIPTION OF REQUIREMENT		CURRENTLY IN COMPLIANCE?	COMPLIANCE DETERMINATION		
CITATION	REQUIREMENT		CURRENT	PROPOSED FOR PERMIT TERM	PROPOSED FREQUENCY OF DETERMINATION
PTC No. P-050301, Condition 2.1	Emissions of SO_2 shall not exceed: **Source** / **lb/hr** / **T/yr** Boiler 1 / --- / --- Boiler 2 / --- / --- Boiler 3 / 1.9 / --- Combined Emissions from Boilers 1 and 2 / 45.3 / --- Combined Emissions from Boilers 1, 2 and 3 / --- / 145	Yes	• Rolling 12-month calculations of plant emissions maintained per Permit No. P-2009.0043, Condition 3.4; • Boiler operating logs of steam production and fuel usage • Results of performance tests for SO_2 (including CEMS data) • Estimates of maximum sulfur content of natural gas supplied to plant • Maintenance and operation of a wet scrubber system in accordance with provisions of PTC No. P-050301 • Compliance with fuel oil sulfur limits in PTC No. P-050301 • Compliance with fuel combustion limits in PTC No. P-050301	• Rolling 12-month calculations of plant emissions maintained per Permit No. P-2009.0043, Condition 3.4; • Boiler operating logs of steam production and fuel usage • Results of performance tests for SO_2 (including CEMS data) • Estimates of maximum sulfur content of natural gas supplied to plant • Maintenance and operation of a wet scrubber system in accordance with provisions of PTC No. P-050301 • Compliance with fuel oil sulfur limits in PTC No. P-050301 • Compliance with fuel combustion limits in PTC No. P-050301	Monthly
PTC No. P-050301, Conditions 2.1 and 2.8	Emissions of NO_x shall not exceed: **Source** / **lb/hr** / **T/yr** Boiler 1 / --- / --- Boiler 2 / --- / --- Boiler 3 / 5.4 / --- Combined Emissions from Boilers 1 and 2 / 61.9 / --- Combined Emissions from Boilers 1, 2 and 3 / --- / 198	Yes	• Rolling 12-month calculations of plant emissions maintained per Permit No. P-2009.0043, Condition 3.4; • Boiler operating logs of steam production and fuel usage • Results of performance tests for NO_x • Compliance with fuel combustion limits in PTC No. P-050301 • Annual boiler tuning	• Rolling 12-month calculations of plant emissions maintained per Permit No. P-2009.0043, Condition 3.4; • Boiler operating logs of steam production and fuel usage • Results of performance tests for NO_x • Compliance with fuel combustion limits in PTC No. P-050301 • Annual boiler tuning	Monthly

COMPLIANCE CERTIFICATIONS AND CURRENT AND PROPOSED COMPLIANCE DETERMINATION METHODS

DESCRIPTION OF REQUIREMENT		CURRENTLY IN COMPLIANCE?	COMPLIANCE DETERMINATION		
CITATION	REQUIREMENT		CURRENT	PROPOSED FOR PERMIT TERM	PROPOSED FREQUENCY OF DETERMINATION
PTC No. P-050301, Condition 2.1	Emissions of CO shall not exceed: Source / lb/hr / T/yr Boiler 1 / 4.6 / --- Boiler 2 / 6.1 / --- Boiler 3 / 1.8 / --- Combined Emissions from Boilers 1, 2 and 3 / --- / 46	Yes	• Rolling 12-month calculations of plant emissions maintained per Permit No. P-2009.0043, Condition 3.4; • Boiler operating logs of steam production and fuel usage • Compliance with fuel combustion limits in PTC No. P-050301 • Annual boiler tuning	• Rolling 12-month calculations of plant emissions maintained per Permit No. P-2009.0043, Condition 3.4; • Boiler operating logs of steam production and fuel usage • Compliance with fuel combustion limits in PTC No. P-050301 • Annual boiler tuning	Monthly
PTC No. P-050301, Condition 2.1.1	Emissions of NOx from the exhaust stacks of Boilers 1and 2 shall each not exceed 96.64 pounds per 1000 gallons when No.6 oil is combusted.	Yes	• Results of performance tests for NO_x • Annual boiler tuning	• Results of performance tests for NO_x • Annual boiler tuning	Annually
40 CFR 60.43c(e)(1)	When combusting fuel oil, particulate matter emissions from Boiler 2 may not exceed 13 ng/J (0.030 lb/MMBtu) heat input, except during periods of startup, shutdown, or malfunction in accordance with 40 CFR 60.43c(d).	Yes	• Fuel usage records • Results of performance tests • Annual Boiler tuning • Operating and maintaining the scrubber in accordance with permit requirements when combusting fuel oil.	• Fuel usage records • Results of performance tests • Annual Boiler tuning • Operating and maintaining the scrubber in accordance with permit requirements when combusting fuel oil.	Monthly

COMPLIANCE CERTIFICATIONS AND CURRENT AND PROPOSED COMPLIANCE DETERMINATION METHODS

DESCRIPTION OF REQUIREMENT		CURRENTLY IN COMPLIANCE?	COMPLIANCE DETERMINATION		
CITATION	REQUIREMENT		CURRENT	PROPOSED FOR PERMIT TERM	PROPOSED FREQUENCY OF DETERMINATION
PTC No. P-050301, Conditions 2.2 and 2.4	When oil is combusted in Boiler 2 BAF shall not cause to be discharged into the atmosphere from Boiler 2 any gases that contain SO2 in excess of 215 ng/J (0.50 lb/million Btu) heat input; or, as an alternative, when oil is combusted in Boiler 2 BAF shall not combust oil in Boiler 2 that contains greater than 0.5 weight percent sulfur. • Compliance with the fuel oil sulfur limits and emission limits of this section shall be determined on a 30-day rolling average basis. • In accordance with 40 CFR 60.42c(i), the SO2 emission limits and fuel oil sulfur limits under this section apply at all times, including periods of startup, shutdown, and malfunction. • In accordance with 40 CFR 60.42c(j), only the heat input supplied to Boiler 2 from the combustion of oil is counted under this section. No credit is provided for the heat input to Boiler 2 from other fuels or for heat derived from exhaust gases from other sources, such as internal combustion engines and kilns. When the exhausts from Boiler 1 and 2 are merged ahead of a single scrubber to comply with Permit Condition 3.13, the exhaust from Boiler 1 shall be subject to the same emissions limits set forth for Boiler 2 in Permit Conditions 3.2 and 3.3	Yes	• Results of performance tests for SO_2 (including CEMS data) • Records of fuel oil sulfur content provided by vendors • Maintenance and operation of a wet scrubber system in accordance with provisions of PTC No. P-050301 • Compliance with fuel oil sulfur limits in PTC No. P-050301	• Results of performance tests for SO_2 (including CEMS data) • Records of fuel oil sulfur content provided by vendors • Maintenance and operation of a wet scrubber system in accordance with provisions of PTC No. P-050301 • Compliance with fuel oil sulfur limits in PTC No. P-050301	Daily (when combusting oil)
PTC No. P-050301, Conditions 2.3, 2.4, and 2.5	BAF shall not cause to be discharged into the atmosphere from Boiler 2 any gases that exhibit greater than 20% opacity (six-minute average), except for one six-minute period (average) per hour of not more than 27% opacity in accordance with 40 CFR 60.43c(c). The opacity standard under 40 CFR 60.43c(c) applies at all times, except during periods of startup, shutdown, or malfunction in accordance with 40 CFR 60.43c(d) When the exhausts from Boiler 1 and 2 are merged ahead of a single scrubber to comply with Permit Condition 3.13, the exhaust from Boiler 1 shall be subject to the same emissions limits set forth for Boiler 2 in Permit Conditions 3.2 and 3.3. the permittee shall not discharge any air pollutant to the atmosphere from any boiler exhaust stack for a period or periods aggregating more than three minutes in any 60-minute period which is greater than 20% opacity as determined by procedures contained in IDAPA 58.01.01.625.	Yes	• Opacity performance testing • Quarterly checks of all plant stack for visible emissions.	• Opacity performance testing • Quarterly checks of all plant stack for visible emissions.	Whenever visible emissions observed from stack and no less often than quarterly

COMPLIANCE CERTIFICATIONS AND CURRENT AND PROPOSED COMPLIANCE DETERMINATION METHODS

DESCRIPTION OF REQUIREMENT		CURRENTLY IN COMPLIANCE?	COMPLIANCE DETERMINATION		
CITATION	REQUIREMENT		CURRENT	PROPOSED FOR PERMIT TERM	PROPOSED FREQUENCY OF DETERMINATION
PTC No. P-050301, Condition 2.6	Combined emissions of nickel from the exhaust stacks of Boilers 1 and 2 shall not exceed 240 pounds per any consecutive 12-month period.	Yes	Compliance with nickel emission limit is demonstrated via operating and maintaining the scrubber in accordance with permit requirements when combusting fuel oil.	Compliance with nickel emission limit is demonstrated via operating and maintaining the scrubber in accordance with permit requirements.	Monthly
PTC No. P-050301, Condition 2.7	The permittee shall not discharge to the atmosphere from any boiler PM in excess of 0.015 gr/dscf of effluent gas corrected to 3% oxygen by volume for gas fuel and 0.050 gr/dscf of effluent gas corrected to 3% oxygen by volume for liquid fuel in accordance with IDAPA 58.01.01.676-677.	Yes	• Results of performance tests • Annual Boiler tuning • Operating and maintaining the scrubber in accordance with permit requirements when combusting fuel oil.	• Results of performance tests • Annual Boiler tuning • Operating and maintaining the scrubber in accordance with permit requirements when combusting fuel oil.	Annual
PTC No. P-050301, Condition 3.1	Boilers 1 and 2 may burn natural gas, distillate oil, or residual oil. Boiler 3 may burn natural gas fuel as primary fuel and low sulfur distillate oil as secondary fuel.	Yes	Boiler fuel usage records	Boiler fuel usage records	Daily
PTC No. P-050301, Condition 3.1.2	The sulfur content of fuels burned in the boilers shall not exceed the following amounts: • Distillate oil burned in Boiler 3 shall not exceed 0.05% sulfur by weight; • Distillate oil burned in Boiler 1 and Boiler 2 shall not exceed 0.5% sulfur by weight in accordance with IDAPA 58.01.01.728, and; • Residual oil burned in Boiler 1 and Boiler 2 shall not exceed 1.75% sulfur by weight in accordance with IDAPA 58.01.01.727.	Yes	Fuel oil supplier certification of sulfur content of oils delivered	Fuel oil supplier certification of sulfur content of oils delivered	Irregularly – with each fuel oil delivery
PTC No. P-050301, Conditions 3.2 and 3.3	The quantity of natural gas combusted in Boiler 3 shall not exceed 328 million standard cubic feet (MMscf) per year, based on any consecutive 12-month period. The quantity of distillate oil combusted in Boiler 3 shall not exceed 393,120 gallons per year, based on any consecutive 12-month period. The combined quantity of residual oil combusted in Boiler 1 and Boiler 2 shall not exceed 15,384 gallons per day and 4,097,682 gallons per year, based on any consecutive 12-month period.	Yes	Boiler fuel usage records	Boiler fuel usage records	Monthly

COMPLIANCE CERTIFICATIONS AND CURRENT AND PROPOSED COMPLIANCE DETERMINATION METHODS

DESCRIPTION OF REQUIREMENT			COMPLIANCE DETERMINATION		
CITATION	REQUIREMENT	CURRENTLY IN COMPLIANCE?	CURRENT	PROPOSED FOR PERMIT TERM	PROPOSED FREQUENCY OF DETERMINATION
PTC No. P-050301, Condition 3.4	Whenever residual oil is combusted in Boiler 1 or Boiler 2, the combined quantity of steam produced by all three boilers shall not exceed 80,000 pounds per hour, based on a daily average.	Yes	Boiler steam production records	Boiler steam production records	Monthly
PTC No. P-050301, Condition 3.5	The permittee shall install, maintain and operate a wet scrubbing system to control emissions of SO2 and PM10 from Boiler 1 and Boiler 2 as follows: • Emissions of SO2 and PM10 from Boiler 1 shall be controlled using a wet scrubber when fuel oil is combusted. When Boiler 1 combusts natural gas, wet scrubbing of the Boiler 1 exhaust is not required. • Emissions of SO2 and PM10 from Boiler 2 shall be controlled using a wet scrubber when fuel oil is combusted. When Boiler 2 combusts natural gas, wet scrubbing of the Boiler 2 exhaust is not required. • When Boiler 2 combusts distillate or residual oil, Boiler 2 shall exhaust through the stack that serves Boiler 1. When Boiler 2 combusts natural gas, Boiler 2 may exhaust through its own stack.	Yes	• Boiler fuel usage records • Scrubber operating records	• Boiler fuel usage records • Scrubber operating records	Daily (when oil is combusted)
PTC No. P-050301, Condition 3.6	The permittee shall install, calibrate, operate and maintain equipment to measure each of the following operating parameters for the wet scrubbing system. When the wet scrubbing system is required to be operated, each operating parameter shall be maintained within the specifications established in the O&M manual: • Pressure drop across the scrubber, or DEQ-approved alternative monitoring, for ensuring dispersion and mixing of scrubbing solution with air; • Scrubbing solution pH; and • Scrubbing solution flow rate.	Yes	Scrubber operating records	Scrubber operating records	Daily (when oil is combusted)

COMPLIANCE CERTIFICATIONS AND CURRENT AND PROPOSED COMPLIANCE DETERMINATION METHODS

DESCRIPTION OF REQUIREMENT			COMPLIANCE DETERMINATION		
CITATION	REQUIREMENT	CURRENTLY IN COMPLIANCE?	CURRENT	PROPOSED FOR PERMIT TERM	PROPOSED FREQUENCY OF DETERMINATION
PTC No. P-050301, Condition 3.7	Within 60 days after startup of the wet scrubbing systems, the permittee shall have developed an O&M manual for the wet scrubbing system, which describes the procedures that will be followed to comply with the PTC General Provisions and the manufacturer specifications for the air pollution control device. At a minimum the following items shall be addressed in the manual: • The manufacturer's recommended minimum and maximum values, or DEQ-approved alternatives, for each of the following operating parameters: pressure drop, for ensuring dispersion and mixing of the scrubbing solution with the air stream; the scrubbing solution pH; and the scrubbing solution flow rate. • Inspection checklists for items that will be periodically inspected while the treatment system is operating, including frequency of inspection. • Inspection checklist for items that will be inspected when the device is taken out of operation and physically opened for inspection (e.g., internal components), including frequency of these internal inspections. • Periodic planned maintenance for the control devices. The contents of the O&M manual shall be based on manufacturer's information to the extent practical. When the manufacturer's information is not used (e.g., a DEQ-approved alternative or performance test information is used in lieu of manufacturer information), this shall be explained in the manual. The O&M manual shall remain onsite at all times and shall be made available to DEQ representatives upon request.	Yes	Inspection of document	Inspection of document	Annually
PTC No. P-050301, Condition 3.8	The burners in each boiler shall be tuned annually to maintain efficient fuel combustion.	Yes	Boiler maintenance records	Boiler maintenance records	Annually
PTC No. P-050301, Condition 3.9	At all times, including periods of startup, shutdown, and malfunction, BAF shall, to the extent practicable, maintain and operate Boiler 2 including associated air pollution control equipment in a manner consistent with good air pollution control practice for minimizing emissions in accordance with 40 CFR 60.11(d).	Yes	• Boiler operating records and logs • Boiler maintenance records • Scrubber operating records • Scrubber maintenance records • CEMS operating records • CEMS maintenance records	• Boiler operating records and logs • Boiler maintenance records • Scrubber operating records • Scrubber maintenance records • CEMS operating records • CEMS maintenance records	Irregularly – during startup, shutdown, or malfunction

COMPLIANCE CERTIFICATIONS AND CURRENT AND PROPOSED COMPLIANCE DETERMINATION METHODS

DESCRIPTION OF REQUIREMENT			COMPLIANCE DETERMINATION		
CITATION	REQUIREMENT	CURRENTLY IN COMPLIANCE?	CURRENT	PROPOSED FOR PERMIT TERM	PROPOSED FREQUENCY OF DETERMINATION
40 CFR 60, Subpart JJJJJJ, § 63.11223	The boilers must be tuned biennially, with each biennial tune-up conducted no more than 25 months after the previous tune-up. Tune-up requirements include:: • As applicable, inspect the burner, and clean or replace any components of the burner as necessary (burner inspection may be delayed until the next scheduled unit shutdown, but each burner must be inspected at least once every 36 months). • Inspect the flame pattern, as applicable, and adjust the burner as necessary to optimize the flame pattern. The adjustment should be consistent with the manufacturer's specifications, if available. • Inspect the system controlling the air-to-fuel ratio, as applicable, and ensure that it is correctly calibrated and functioning properly. • Optimize total emissions of carbon monoxide. This optimization should be consistent with the manufacturer's specifications, if available. • Measure the concentrations in the effluent stream of carbon monoxide in parts per million, by volume, and oxygen in volume percent, before and after the adjustments are made (measurements may be either on a dry or wet basis, as long as it is the same basis before and after the adjustments are made).	Yes	This requirement is applicable ONLY to oil-fired boilers. None of the boilers at the Blackfoot Facility have started up on oil fuel since Subpart JJJJJJ became effective.	• Boiler fuel usage records • Boiler maintenance records	Annually
40 CFR 60, Subpart JJJJJJ, § 63.11201 and Table 1	A one-time energy assessment must be performed by a qualified energy assessor. The energy assessment must include: • A visual inspection of the boiler system, • An evaluation of operating characteristics of the facility, specifications of energy using systems, operating and maintenance procedures, and unusual operating constraints, • Inventory of major systems consuming energy from affected boiler(s), • A review of available architectural and engineering plans, facility operation and maintenance procedures and logs, and fuel usage, • A list of major energy conservation measures, • A list of the energy savings potential of the energy conservation measures identified, • A comprehensive report detailing the ways to improve efficiency, the cost of specific improvements, benefits, and the time frame for recouping those investments. The energy assessment must be completed by March 21, 2014. An energy assessment completed on or after January 1, 2008, that meets or is amended to meet the energy assessment requirements will satisfy the energy assessment requirement.	Yes	The assessment is not due until March 21, 2014	Plant records	Annual

COMPLIANCE CERTIFICATIONS AND CURRENT AND PROPOSED COMPLIANCE DETERMINATION METHODS

DESCRIPTION OF REQUIREMENT			COMPLIANCE DETERMINATION		
CITATION	REQUIREMENT	CURRENTLY IN COMPLIANCE?	CURRENT	PROPOSED FOR PERMIT TERM	PROPOSED FREQUENCY OF DETERMINATION
		PROCESS A			
IDAPA 58.01.01.702	The permittee shall not discharge to the atmosphere from any source operating prior to October 1, 1979, PM in excess of the amount shown by the following equations, where E is the allowable emission from the entire source in pounds per hour, and PW is the process weight in pounds per hour. a. If PW is less than 17,000 lb/hr, $E = 0.045(PW)^{0.6}$ b. If PW is equal to or greater than 17,000 lb/hr, $E = 1.12(PW)^{0.27}$ The process weight PM limitation applies to each emissions unit/process identified below (list of units taken from Table 4.1 of Permit T1-060315):). • DHQ • DHT • DHU • DHZ	Yes	Periodic one-minute observation of each affected emissions point, or source, using EPA Method 22 (in 40 CFR 60, Appendix A). Per Condition 4.1.1 of Permit T1-060315 demonstrating compliance with the visible emissions requirement contained in Permit Condition 4.3 inherently demonstrates compliance with the process weight PM emissions limitations.	One-minute observation of each affected emissions point, or source, using EPA Method 22 (in 40 CFR 60, Appendix A).	Quarterly
IDAPA 58.01.01.625	The permittee shall not discharge any air pollutant to the atmosphere from any point of emission for a period or periods aggregating more than three minutes in any 60-minute period which is greater than 20% opacity as determined by procedures contained in IDAPA 58.01.01.625. These provisions shall not apply when the presence of uncombined water, nitrogen oxides, and/or chlorine gas are the only reason(s) for the failure of the emission to comply with the requirements of this section.	Yes	Records of inspections of visible emissions.	Records of inspections of visible emissions.	Quarterly

COMPLIANCE CERTIFICATIONS AND CURRENT AND PROPOSED COMPLIANCE DETERMINATION METHODS

DESCRIPTION OF REQUIREMENT			COMPLIANCE DETERMINATION		
CITATION	REQUIREMENT	CURRENTLY IN COMPLIANCE?	CURRENT	PROPOSED FOR PERMIT TERM	PROPOSED FREQUENCY OF DETERMINATION
		PROCESS B			
IDAPA 58.01.01.702	The permittee shall not discharge to the atmosphere from any source operating prior to October 1, 1979, PM in excess of the amount shown by the following equations, where E is the allowable emission from the entire source in pounds per hour, and PW is the process weight in pounds per hour. c. If PW is less than 17,000 lb/hr, $E = 0.045(PW)^{0.6}$ d. If PW is equal to or greater than 17,000 lb/hr, $E = 1.12(PW)^{0.27}$ The process weight PM limitation applies to each emissions unit/process identified below (list of units taken from Table 4.1 of Permit T1-060315):). • DUQ • DUT • DUV • DQA • DQB	Yes	Periodic one-minute observation of each affected emissions point, or source, using EPA Method 22 (in 40 CFR 60, Appendix A). Per Condition 4.1.1 of Permit T1-060315 demonstrating compliance with the visible emissions requirement contained in Permit Condition 4.3 inherently demonstrates compliance with the process weight PM emissions limitations.	One-minute observation of each affected emissions point, or source, using EPA Method 22 (in 40 CFR 60, Appendix A).	Quarterly
IDAPA 58.01.01.625	The permittee shall not discharge any air pollutant to the atmosphere from any point of emission for a period or periods aggregating more than three minutes in any 60-minute period which is greater than 20% opacity as determined by procedures contained in IDAPA 58.01.01.625. These provisions shall not apply when the presence of uncombined water, nitrogen oxides, and/or chlorine gas are the only reason(s) for the failure of the emission to comply with the requirements of this section.	Yes	Records of inspections of visible emissions.	Records of inspections of visible emissions.	Quarterly

COMPLIANCE CERTIFICATIONS AND CURRENT AND PROPOSED COMPLIANCE DETERMINATION METHODS

DESCRIPTION OF REQUIREMENT		CURRENTLY IN COMPLIANCE?	COMPLIANCE DETERMINATION		
CITATION	REQUIREMENT		CURRENT	PROPOSED FOR PERMIT TERM	PROPOSED FREQUENCY OF DETERMINATION
		PROCESS C			
Permit No. P-2009.0042, Condition 2.3	The PM10, SO2, NOX, CO, and VOC emissions from the stack of finish dryer CTZ shall not exceed the following limits[1]: Pollutant — Allowable Emissions PM-10 — 0.58 lb/hr; 1.63 T/yr[2] SO2 — 0.12 lb/hr; 0.36 T/yr[2] NOx — 0.2 lb/hr; 0.88 T/yr[2] CO — 1.43 lb/hr; 6.24 T/yr[2] VOC — 0.06 lb/hr; 0.26 T/yr[2] 1. In absence of any other credible evidence, compliance is assured by complying with this permit's operating, monitoring and record keeping requirements. 2. Tons per consecutive 12-calendar month period	Yes	Compliance with the operating, monitoring, and record keeping requirements of Permit No. P-2009.0042	Compliance with the operating, monitoring, and record keeping requirements of Permit No. P-2009.0042	Monthly
Permit No. P-2009.0042, Condition 2.4	Emissions from the finish dryer stack, or any other stack, vent, or functionally equivalent opening associated with the finish dryer, shall not exceed 20% opacity for a period or periods aggregating more than three minutes in any 60-minute period as required by IDAPA 58.01.01.625. Opacity shall be determined by the procedures contained in IDAPA 58.01.01.625.	Yes	Quarterly checks of all plant stack for visible emissions.	Quarterly checks of all plant stack for visible emissions.	Whenever visible emissions observed from stack and no less often than quarterly
Permit No. P-2009.0042, Condition 2.5	The finish dryer shall only combust natural gas as fuel.	Yes	Review of changes through review of capital projects and periodic audits of facilities and operations.	Review of changes through review of capital projects and periodic audits of facilities and operations.	Annually

COMPLIANCE CERTIFICATIONS AND CURRENT AND PROPOSED COMPLIANCE DETERMINATION METHODS

DESCRIPTION OF REQUIREMENT		CURRENTLY IN COMPLIANCE?	COMPLIANCE DETERMINATION		
CITATION	REQUIREMENT		CURRENT	PROPOSED FOR PERMIT TERM	PROPOSED FREQUENCY OF DETERMINATION
Permit No. P-2009.0042, Conditions 2.6 and 2.7	• The dehydrated food products production rate for the finish dryer shall not exceed 2,800 lb/hr. • The dehydrated food products production rate for the finish dryer shall not exceed 15,698,000 lb/yr in any consecutive 12-calendar months.	Yes	Plant production records	Plant production records	Monthly
IDAPA 58.01.01.702	The permittee shall not discharge to the atmosphere from any source operating prior to October 1, 1979, PM in excess of the amount shown by the following equations, where E is the allowable emission from the entire source in pounds per hour, and PW is the process weight in pounds per hour. e. If PW is less than 17,000 lb/hr, $E = 0.045(PW)^{0.6}$ f. If PW is equal to or greater than 17,000 lb/hr, $E = 1.12(PW)^{0.27}$ The process weight PM limitation applies to each emissions unit/process identified below (list of units taken from Table 4.1 of Permit T1-060315):). • CIR • CXX-CYY • CHX • HEB • CNV • CNW • CTU	Yes	Periodic one-minute observation of each affected emissions point, or source, using EPA Method 22 (in 40 CFR 60, Appendix A). Per Condition 4.1.1 of Permit T1-060315 demonstrating compliance with the visible emissions requirement contained in Permit Condition 4.3 inherently demonstrates compliance with the process weight PM emissions limitations.	One-minute observation of each affected emissions point, or source, using EPA Method 22 (in 40 CFR 60, Appendix A).	Quarterly
IDAPA 58.01.01.625	The permittee shall not discharge any air pollutant to the atmosphere from any point of emission for a period or periods aggregating more than three minutes in any 60-minute period which is greater than 20% opacity as determined by procedures contained in IDAPA 58.01.01.625. These provisions shall not apply when the presence of uncombined water, nitrogen oxides, and/or chlorine gas are the only reason(s) for the failure of the emission to comply with the requirements of this section.	Yes	Records of inspections of visible emissions.	Records of inspections of visible emissions.	Quarterly