IDAHO DEPARTMENT OF ENVIRONMENTAL QUALITY

1410 North Hilton
Boise, Idaho 83706-1253

RECEIVED
MAR 01 2013
DEPARTMENT OF ENVIRONMENTAL QUALITY
STATE A.Q. PROGRAM

RECEIPT

3/1/13
DATE

RECEIVED FROM Idaho State University

SOURCE			
Cash ☐	Check ☒	Money Order ☐	No. 23102610

DESCRIPTION	AMOUNT OF PAYMENT
	$1,000.00
PTC	
Facility 005-00029	

RECEIVED BY

TOTAL RECEIVED 1,000.00

PID	OBS	CA	SUB-OBJ	WP	BE

№ 83434

RECEIVED
MAR 01 2013
DEPARTMENT OF ENVIRONMENTAL QUALITY
STATE A.Q. PROGRAM

DEQ AIR QUALITY PROGRAM
1410 N. Hilton, Boise, ID 83706
For assistance, call the
Air Permit Hotline – 1-877-5PERMIT

Cover Sheet for Air Permit Application – Permit to Construct **Form CSPTC**

Please see instructions on page 2 before filling out the form.

COMPANY NAME, FACILITY NAME, AND FACILITY ID NUMBER

1. Company Name: Idaho State University
2. Facility Name
3. Facility ID No. 005-00029
4. Brief Project Description - Permit additional equipment including boilers and paint booths and convert Tier II Operating Permit to a PTC

PERMIT APPLICATION TYPE

5. ☐ New Source ☒ New Source at Existing Facility ☐ PTC for a Tier I Source Processed Pursuant to IDAPA 58.01.01.209.05.c
☒ Unpermitted Existing Source ☐ Facility Emissions Cap ☒ Modify Existing Source: Permit No.: T2-030317 Date Issued: 8/2/2006
☐ Required by Enforcement Action: Case No.:____

6. ☒ Minor PTC ☐ Major PTC

FORMS INCLUDED

Included	N/A	Forms		DEQ Verify
☒	☐	Form CSPTC – Cover Sheet		☐
☒	☐	Form GI – Facility Information		☐
☒	☐	Form EU0 – Emissions Units General		☐
☐	☐	Form EU1– Industrial Engine Information	Please specify number of EU1s attached: ____	☐
☐	☐	Form EU2– Nonmetallic Mineral Processing Plants	Please specify number of EU2s attached: ____	☐
☒	☐	Form EU3– Spray Paint Booth Information	Please specify number of EU3s attached: 3	☐
☐	☐	Form EU4– Cooling Tower Information	Please specify number of EU3s attached: ____	☐
☒	☐	Form EU5 – Boiler Information	Please specify number of EU4s attached: 6	☐
☐	☐	Form CBP– Concrete Batch Plant	Please specify number of CBPs attached: ____	☐
☐	☐	Form HMAP – Hot Mix Asphalt Plant	Please specify number of HMAPs attached: ____	☐
☐	☐	PERF – Portable Equipment Relocation Form		☐
☐	☐	Form AO – Afterburner/Oxidizer		☐
☐	☐	Form CA – Carbon Adsorber		☐
☐	☐	Form CYS – Cyclone Separator		☐
☐	☐	Form ESP – Electrostatic Precipitator		☐
☒	☐	Form BCE– Baghouses Control Equipment		☐
☐	☐	Form SCE– Scrubbers Control Equipment		☐
☐	☐	Form VSCE – Venturi Scrubber Control Equipment		☐
☐	☐	Form CAM – Compliance Assurance Monitoring		☐
☒	☐	Forms EI– Emissions Inventory		☐
☒	☐	PP – Plot Plan		☐
☒	☐	Forms MI1 – MI4 – Modeling	(Excel workbook, all 4 worksheets)	☐
☒	☐	Form FRA – Federal Regulation Applicability		☐

DEQ AIR QUALITY PROGRAM
1410 N. Hilton, Boise, ID 83706
For assistance, call the
Air Permit Hotline: 1-877-5PERMIT

General Information Form GI
Revision 7
6/29/12

Please see instructions on back page before filling out the form. All information is required. If information is missing, the application will not be processed.

Identification

1. Facility name: Idaho State University

2. Existing facility identification number: 005-00029

☐ **Check if new facility (not yet operating)**

3. Brief project description: Permit additional equipment including boilers and paint booths and convert Tier II Op. Permit to a PTC

Facility Information

4. Primary facility permitting contact name: Robert Colling
Contact type: Facility permitting contact
Telephone number: (208) 282-2209
E-mail: collrobi@isu.edu

5. Alternate facility permitting contact name: Steve Fuger
Alternate contact type: Responsible official
Telephone number: (208) 282-2209
E-mail: fugestev@isu.edu

6. Mailing address where permit will be sent (street/city/county/state/zip code): Facilities Services, Building No. 18, 749 E. Humbolt, Stop 8137/ Pocatello/ Bannock/ ID/ 83209-8137

7. Physical address of permitted facility (if different than mailing address) (street/ city/county/state/zip code): Heat Plant, Building No. 20, 715 E. Humbolt, Stop 8137/ Pocatello/ Bannock/ ID/ 83209-8137

8. Is the equipment portable? ☐ Yes* ☒ No *If yes, complete and attach PERF; see instructions.

9. NAICS codes: Primary NAICS: 611310
Secondary NAICS:

10. Brief business description and principal product produced: University engaged in providing baccalaureate and graduate level degrees.

11. Identify any adjacent or contiguous facility this company owns and/or operates:

12. Specify type of application ☒ **Permit to construct (PTC); application fee of $1,000 required. See instructions.**

☐ **Tier I permit** ☐ **Tier II permit** ☐ **Tier II/Permit to construct**

For Tier I permitted facilities only: If you are applying for a PTC then you must also specify how the PTC will be incorporated into the Tier I permit.

☐ **Co-process Tier I modification and PTC** ☐ **Incorporate PTC at the time of Tier I renewal** ☐ **Administratively amend the Tier I permit to incorporate the PTC upon applicant's request (IDAPA 58.01.01.209.05.a, b, or c)**

Certification

In accordance with IDAPA 58.01.01.123 (Rules for the Control of Air Pollution in Idaho), I certify based on information and belief formed after reasonable inquiry, the statements and information in the document(s) are true, accurate, and complete.

13. Responsible official's name: Steve Fuger
Official's title: Facilities Director
Official's address: Facilities Services, Building No. 18, 749 E. Humbolt, Pocatello, ID, 83209-8137
Telephone number: (208) 282-2209
E-mail: fugestev@isu.edu
Official's signature: Steven Fuger
Date: 2-25-2013

☒ **14. Check here to indicate that you want to review the draft permit before final issuance.**

DEQ AIR QUALITY PROGRAM
1410 N. Hilton, Boise, ID 83706
For assistance, call the
Air Permit Hotline – 1-877-5PERMIT

Emissions Unit - General **Form EU0**
Revision 4
08/28/08

Please see instructions on page 2 before filling out the form.

IDENTIFICATION

1. Company Name:	2. Facility Name:	3. Facility ID No:
Idaho State University		005-00029

4. Brief Project Description: Permit additional equipment and convert Tier II Operating Permit to a PTC

EMISSIONS UNIT (PROCESS) IDENTIFICATION & DESCRIPTION

5.	Emissions Unit (EU) Name:	DIESEL STORAGE TANK
6.	EU ID Number:	DT1
7.	EU Type:	☐ New Source ☒ Unpermitted Existing Source ☐ Modification to a Permitted Source -- Previous Permit #: Date Issued:
8.	Manufacturer:	CONVAULT
9.	Model:	DOUBLE 5000
10..	Maximum Capacity:	5000 GALLONS
11.	Date of Construction:	1998
12.	Date of Modification (if any):	
13.	Is this a Controlled Emission Unit?	☒ No ☐ Yes If Yes, complete the following section. If No, go to line 22.

EMISSIONS CONTROL EQUIPMENT

14. Control Equipment Name and ID:

15. Date of Installation: 16. Date of Modification (if any):

17. Manufacturer and Model Number:

18. ID(s) of Emission Unit Controlled:

19. Is operating schedule different than emission units(s) involved? ☐ Yes ☐ No

20. Does the manufacturer guarantee the control efficiency of the control equipment? ☐ Yes ☐ No (If Yes, attach and label manufacturer guarantee)

	Pollutant Controlled					
	PM	PM10	SO_2	NOx	VOC	CO
Control Efficiency						

21. If manufacturer's data is not available, attach a separate sheet of paper to provide the control equipment design specifications and performance data to support the above mentioned control efficiency.

EMISSION UNIT OPERATING SCHEDULE (hours/day, hours/year, or other)

22.	Actual Operation:	8760 HRS PER YEAR
23.	Maximum Operation:	8760 HRS PER YEAR

REQUESTED LIMITS

24. Are you requesting any permit limits? ☒ Yes ☐ No (If Yes, indicate all that apply below)

☐ Operation Hour Limit(s):	
☐ Production Limit(s):	
☒ Material Usage Limit(s):	80,000 GALLONS DIESEL THROUGHPUT PER YEAR
☐ Limits Based on Stack Testing:	Please attach all relevant stack testing summary reports
☐ Other:	

25. Rationale for Requesting the Limit(s): ENSURE AMBIENT AIR QUALIITY

DEQ AIR QUALITY PROGRAM
1410 N. Hilton, Boise, ID 83706
For assistance, call the
Air Permit Hotline – 1-877-5PERMIT

Emissions Unit - General **Form EU0**
Revision 4
08/28/08

Please see instructions on page 2 before filling out the form.

IDENTIFICATION

1. Company Name:	2. Facility Name:	3. Facility ID No:
Idaho State University		005-00029

4. Brief Project Description: Permit additional equipment and convert Tier II Operating Permit to a PTC

EMISSIONS UNIT (PROCESS) IDENTIFICATION & DESCRIPTION

5.	Emissions Unit (EU) Name:	GASOLINE STORAGE TANK
6.	EU ID Number:	GT1
7.	EU Type:	☐ New Source ☒ Unpermitted Existing Source ☐ Modification to a Permitted Source -- Previous Permit #: Date Issued:
8.	Manufacturer:	CONVAULT
9.	Model:	DOUBLE 5000
10..	Maximum Capacity:	5000 GALLONS
11.	Date of Construction:	1998
12.	Date of Modification (if any):	
13.	Is this a Controlled Emission Unit?	☒ No ☐ Yes If Yes, complete the following section. If No, go to line 22.

EMISSIONS CONTROL EQUIPMENT

14. Control Equipment Name and ID:

15. Date of Installation: 16. Date of Modification (if any):

17. Manufacturer and Model Number:

18. ID(s) of Emission Unit Controlled:

19. Is operating schedule different than emission units(s) involved? ☐ Yes ☐ No

20. Does the manufacturer guarantee the control efficiency of the control equipment? ☐ Yes ☐ No (If Yes, attach and label manufacturer guarantee)

	Pollutant Controlled					
	PM	PM10	SO_2	NOx	VOC	CO
Control Efficiency						

21. If manufacturer's data is not available, attach a separate sheet of paper to provide the control equipment design specifications and performance data to support the above mentioned control efficiency.

EMISSION UNIT OPERATING SCHEDULE (hours/day, hours/year, or other)

22.	Actual Operation:	8760 HRS PER YEAR
23.	Maximum Operation:	8760 HRS PER YEAR

REQUESTED LIMITS

24. Are you requesting any permit limits? ☒ Yes ☐ No (If Yes, indicate all that apply below)

☐ Operation Hour Limit(s):	
☐ Production Limit(s):	
☒ Material Usage Limit(s):	80,000 GALLONS GASOLINE THROUGHPUT PER YEAR
☐ Limits Based on Stack Testing:	Please attach all relevant stack testing summary reports
☐ Other:	

25. Rationale for Requesting the Limit(s): ENSURE AMBIENT AIR QUALIITY

DEQ AIR QUALITY PROGRAM
1410 N. Hilton, Boise, ID 83706
For assistance, call the
Air Permit Hotline – 1-877-5PERMIT

Emissions Units - Spray Paint Booth Information **Form EU3**
Revision 5
08/28/08

Paint Booth 1

Please see instructions on page 2 before filling out the form.

IDENTIFICATION

1. Company Name:	2. Facility Name:	3. Facility ID No:
Idaho State University		005-00029

4. Brief Project Description: Permit additional equipment including boilers and paint booths and convert Tier II Operating Permit to a PTC

BOOTH INFORMATION

5. Booth Type: ☐ New Booth ☒ Unpermitted Existing Booth
☐ Modification to a Permitted Booth, Permit #: , Date Issued:

6. Construction Date:

SPRAY GUN DESCRIPTION AND SPECIFICATIONS

Gun No.	7. Manufacturer	8. Model	9. Type	10. Transfer Eff. %	11. Rated Capacity (gal/hr)
1	Sata Jet	2000 & 3000 RP	Reduced Pressure	>65%	
2	Devil Bliss	GTi	HVLP	>65%	
3	Anest Iwata	LPH-400-124 LV	LPLV	>65%	
4	Sata Jet	NR2000 & Mini Jet	HVLP	>65%	

Number of guns to be used simultaneously:

SPRAY MATERIAL DESCRIPTION AND SPECIFICATIONS

12. Type of Spray Material Used	13. Type of Material Coated	14. Max. Usage (gal/day)	15. Solid TAP/HAP Content (lb/gal)	16. VOC TAP/HAP Content (lb/gal)	17. MSDS (Y/N)
Automotive Coatings	Metal and Plastic	5	See Table 4-1	See Table 4-1	Y

REQUEST FOR PERMIT LIMITATIONS

18. Are you requesting any permit limits? ☐ No ☒ Yes. If Yes, check all that apply below and fill in requested limit(s)

☐ Operation Hour Limits:
☐ Production Limits:
☒ Material Usage Limits: Per booth- 5 gal per day, 1000 gal per year
☐ Other:

19. Rationale for Requesting the Limit(s): ensure ambient air quality

EMISSION CONTROL DEVICE (FILTER[b]) DESCRIPTION AND SPECIFICATIONS

Stack Served	20. Filter Manufacturer	21. Model	22. PM Control Efficiency(%)[a]	23. Dimension (Total Area, Thickness and Number of Filters)
Stack 1	Global Finishing Solutions	FL-ERP	99.83 (99% used in calcs)	
Stack 2				
Stack 3				
Stack 4				

Notes: a. Provide either stack test data or vendor's documentation to support the control efficiency specified above.
b. Fill out and submit appropriate control equipment form(s) if this booth has a control device(s) other than a filter system.

BOOTH OPERATING SCHEDULE (indicate hours/day, hours/year, or other)

24. Actual Operation:	25. Maximum Operation:
8 hours per day, 200 days per year	8 hours per day,200 days per year

DEQ AIR QUALITY PROGRAM
1410 N. Hilton, Boise, ID 83706
For assistance, call the
Air Permit Hotline – 1-877-5PERMIT

Emissions Units - Spray Paint Booth Information **Form EU3**
Revision 5
08/28/08

Paint Booth 2

Please see instructions on page 2 before filling out the form.

IDENTIFICATION

1. Company Name:	2. Facility Name:	3. Facility ID No:
Idaho State University		005-00029

4. Brief Project Description: Permit additional equipment including boilers and paint booths and convert Tier II Operating Permit to a PTC

BOOTH INFORMATION

5. Booth Type: ☐ New Booth ☒ Unpermitted Existing Booth
☐ Modification to a Permitted Booth, Permit #: , Date Issued:

6. Construction Date:

SPRAY GUN DESCRIPTION AND SPECIFICATIONS

Gun No.	7. Manufacturer	8. Model	9. Type	10. Transfer Eff. %	11. Rated Capacity (gal/hr)
1	Sata Jet	2000 & 3000 RP	Reduced Pressure	>65%	
2	Devil Bliss	GTi	HVLP	>65%	
3	Anest Iwata	LPH-400-124 LV	LPLV	>65%	
4	Sata Jet	NR2000 & Mini Jet	HVLP	>65%	

Number of guns to be used simultaneously:

SPRAY MATERIAL DESCRIPTION AND SPECIFICATIONS

12. Type of Spray Material Used	13. Type of Material Coated	14. Max. Usage (gal/day)	15. Solid TAP/HAP Content (lb/gal)	16. VOC TAP/HAP Content (lb/gal)	17. MSDS (Y/N)
Automotive Coatings	Metal and Plastic	5	See Table 4-1	See Table 4-1	Y

REQUEST FOR PERMIT LIMITATIONS

18. Are you requesting any permit limits? ☐ No ☒ Yes. If Yes, check all that apply below and fill in requested limit(s)

☐ Operation Hour Limits: ☐ Production Limits:

☒ Material Usage Limits: Per booth- 5 gal per day, 1000 gal per year ☐ Other:

19. Rationale for Requesting the Limit(s): ensure ambient air quality

EMISSION CONTROL DEVICE (FILTER[b]) DESCRIPTION AND SPECIFICATIONS

Stack Served	20. Filter Manufacturer	21. Model	22. PM Control Efficiency(%)[a]	23. Dimension (Total Area, Thickness and Number of Filters)
Stack 1	Global Finishing Solutions	FL-ERP	99.83 (99% used in calcs)	
Stack 2				
Stack 3				
Stack 4				

Notes: a. Provide either stack test data or vendor's documentation to support the control efficiency specified above.
b. Fill out and submit appropriate control equipment form(s) if this booth has a control device(s) other than a filter system.

BOOTH OPERATING SCHEDULE (indicate hours/day, hours/year, or other)

24. Actual Operation:	25. Maximum Operation:
8 hours per day, 200 days per year	8 hours per day,200 days per year

DEQ AIR QUALITY PROGRAM
1410 N. Hilton, Boise, ID 83706
For assistance, call the
Air Permit Hotline – 1-877-5PERMIT

Emissions Units - Spray Paint Booth Information **Form EU3**
Revision 5
08/28/08

Paint Booth 3

Please see instructions on page 2 before filling out the form.

IDENTIFICATION

1. Company Name:	2. Facility Name:	3. Facility ID No:
Idaho State University		005-00029

4. Brief Project Description: Permit additional equipment including boilers and paint booths and convert Tier II Operating Permit to a PTC

BOOTH INFORMATION

5. Booth Type: ☐ New Booth ☒ Unpermitted Existing Booth
☐ Modification to a Permitted Booth, Permit #: , Date Issued:

6. Construction Date: 1996

SPRAY GUN DESCRIPTION AND SPECIFICATIONS

Gun No.	7. Manufacturer	8. Model	9. Type	10. Transfer Eff. %	11. Rated Capacity (gal/hr)
1	Graco	244119	HVLP	>65%	
2	Pro-Finish	CSA	HVLP	>65%	
3					
4					

Number of guns to be used simultaneously:

SPRAY MATERIAL DESCRIPTION AND SPECIFICATIONS

12. Type of Spray Material Used	13. Type of Material Coated	14. Max. Usage (gal/day)	15. Solid TAP/HAP Content (lb/gal)	16. VOC TAP/HAP Content (lb/gal)	17. MSDS (Y/N)
Paint and Lacquer	Wood	5	See Table 4-1	See Table 4-1	Y

REQUEST FOR PERMIT LIMITATIONS

18. Are you requesting any permit limits? ☐ No ☒ Yes. If Yes, check all that apply below and fill in requested limit(s)

☐ Operation Hour Limits:
☐ Production Limits:
☒ Material Usage Limits: 5 gal per day, 500 gal per year
☐ Other:

19. Rationale for Requesting the Limit(s): Ensure ambient air quality

EMISSION CONTROL DEVICE (FILTER[b]) DESCRIPTION AND SPECIFICATIONS

Stack Served	20. Filter Manufacturer	21. Model	22. PM Control Efficiency(%)[a]	23. Dimension (Total Area, Thickness and Number of Filters)
Stack 1	Global Finishing Solutions	FL-ERP	99.83 (99% used in calcs)	
Stack 2				
Stack 3				
Stack 4				

Notes: a. Provide either stack test data or vendor's documentation to support the control efficiency specified above.
b. Fill out and submit appropriate control equipment form(s) if this booth has a control device(s) other than a filter system.

BOOTH OPERATING SCHEDULE (indicate hours/day, hours/year, or other)

24. Actual Operation:	25. Maximum Operation:
4 hours per day, 100 days per year	8 hours per day,200 days per year

DEQ AIR QUALITY PROGRAM
1410 N. Hilton, Boise, ID 83706
For assistance, call the
Air Permit Hotline – 1-877-5PERMIT

Emissions Units - Industrial Boiler Information **Form EU5**
Revision 5
08/28/08

Please see instructions on page 2 before filling out the form.

IDENTIFICATION

1. Company Name:	2. Facility Name:	3 Facility ID No:
Idaho State University		005-00029

4. Brief Project Description: Permit additional equipment and and convert Tier II Operating Permit to a PTC

EXEMPTION

Please see IDAPA 58.01.01.222 for a list of industrial boilers that are exempt from Permit to Construct requirements.

BOILER (EMISSION UNIT) DESCRIPTION AND SPECIFICATIONS

5. Type of Request: ☐ New Unit ☐ Unpermitted Existing Unit ☒ Modification to a Unit with Permit #:T2-030317

6. Use of Boiler: ☐ % Used For Process ☒ % Used For Space Heat ☐ % Used For Generating Electricity ☒ Other: Hot water supply

7. Boiler ID Number: B2	8. Rated Capacity: ☒ 23 Million British Thermal Units Per Hour (MMBtu/hr) ☐ 1,000 Pounds Steam Per Hour (1,000 lb steam/hr)	
9. Construction Date: Pre-2004	10. Manufacturer: Babcock and Wilcox	11. Model: H-1329
12. Date of Modification (if applicable): 2013	13. Serial Number (if available):	14. Control Device (if any): None **Note: Attach applicable control equipment form(s)**

FUEL DESCRIPTION AND SPECIFICATIONS

15. Fuel Type	☐ Diesel Fuel (#) (gal/hr)	☒ Natural Gas (cf/hr)	☐ Coal (unit: /hr)	☐ Other Fuels (unit: /hr)
16. Full Load Consumption Rate		22550		
17. Actual Consumption Rate		22550		
18. Fuel Heat Content (Btu/unit, LHV)		1020 Btu/scf		
19. Sulfur Content wt%		0.0007		
20. Ash Content wt%		N/A		

STEAM DESCRIPTION AND SPECIFICATIONS

21. Steam Heat Content	NA	NA		
22. Steam Temperature (°F)	N/A	N/A		
23. Steam Pressure (psi)	N/A	N/A		
24 Steam Type	N/A	N/A	☐ Saturated ☐ Superheated	☐ Saturated ☐ Superheated

OPERATING LIMITS & SCHEDULE

25. Imposed Operating Limits (hours/year, or gallons fuel/year, etc.):	32.5 MMscf Natural Gas/yr
26. Operating Schedule (hours/day, months/year, etc.):	October-May, 24 hrs/day
27. NSPS Applicability: ☐ Yes ☒ No	If Yes, which subpart:

DEQ AIR QUALITY PROGRAM
1410 N. Hilton, Boise, ID 83706
For assistance, call the
Air Permit Hotline – 1-877-5PERMIT

Emissions Units - Industrial Boiler Information **Form EU5**
Revision 5
08/28/08

Please see instructions on page 2 before filling out the form.

IDENTIFICATION

1. Company Name:	2. Facility Name:	3 Facility ID No:
Idaho State University		005-00029

4. Brief Project Description: Permit additional equipment and and convert Tier II Operating Permit to a PTC

EXEMPTION

Please see IDAPA 58.01.01.222 for a list of industrial boilers that are exempt from Permit to Construct requirements.

BOILER (EMISSION UNIT) DESCRIPTION AND SPECIFICATIONS

5. Type of Request: ☐ New Unit ☐ Unpermitted Existing Unit ☒ Modification to a Unit with Permit #:T2-030317

6. Use of Boiler: ☐ % Used For Process ☒ % Used For Space Heat ☐ % Used For Generating Electricity ☒ Other: Hot water supply

7. Boiler ID Number: B3	8. Rated Capacity: ☒ 26.9 Million British Thermal Units Per Hour (MMBtu/hr) ☐ 1,000 Pounds Steam Per Hour (1,000 lb steam/hr)	
9. Construction Date: Pre-2004	10. Manufacturer: Superior	11. Model: N/A
12. Date of Modification (if applicable): 2013	13. Serial Number (if available):	14. Control Device (if any): None **Note: Attach applicable control equipment form(s)**

FUEL DESCRIPTION AND SPECIFICATIONS

15. Fuel Type	☐ Diesel Fuel (#) (gal/hr)	☒ Natural Gas (cf/hr)	☐ Coal (unit: /hr)	☐ Other Fuels (unit: /hr)
16. Full Load Consumption Rate		26400		
17. Actual Consumption Rate		26400		
18. Fuel Heat Content (Btu/unit, LHV)		1020 Btu/scf		
19. Sulfur Content wt%		0.0007		
20. Ash Content wt%		N/A		

STEAM DESCRIPTION AND SPECIFICATIONS

21. Steam Heat Content	NA	NA		
22. Steam Temperature (°F)	N/A	N/A		
23. Steam Pressure (psi)	N/A	N/A		
24 Steam Type	N/A	N/A	☐ Saturated ☐ Superheated	☐ Saturated ☐ Superheated

OPERATING LIMITS & SCHEDULE

25. Imposed Operating Limits (hours/year, or gallons fuel/year, etc.):	203 MMscf Natural Gas/yr
26. Operating Schedule (hours/day, months/year, etc.):	October-May, 24 hrs/day
27. NSPS Applicability: ☐ Yes ☒ No	If Yes, which subpart:

DEQ AIR QUALITY PROGRAM
1410 N. Hilton, Boise, ID 83706
For assistance, call the
Air Permit Hotline – 1-877-5PERMIT

Emissions Units - Industrial Boiler Information **Form EU5**
Revision 5
08/28/08

Please see instructions on page 2 before filling out the form.

IDENTIFICATION

1. Company Name:	2. Facility Name:	3 Facility ID No:
Idaho State University		005-00029

4. Brief Project Description: Permit additional equipment and and convert Tier II Operating Permit to a PTC

EXEMPTION

Please see IDAPA 58.01.01.222 for a list of industrial boilers that are exempt from Permit to Construct requirements.

BOILER (EMISSION UNIT) DESCRIPTION AND SPECIFICATIONS

5. Type of Request: ☐ New Unit ☐ Unpermitted Existing Unit ☒ Modification to a Unit with Permit #:T2-030317

6. Use of Boiler: ☐ % Used For Process ☒ % Used For Space Heat ☐ % Used For Generating Electricity ☒ Other: Hot water supply

7. Boiler ID Number: B4	8. Rated Capacity: ☒ 72.84 Million British Thermal Units Per Hour (MMBtu/hr) ☐ 1,000 Pounds Steam Per Hour (1,000 lb steam/hr)	
9. Construction Date: 2005	10. Manufacturer: Keystone	11. Model: Victory
12. Date of Modification (if applicable): 2013	13. Serial Number (if available): N/A	14. Control Device (if any): None **Note: Attach applicable control equipment form(s)**

FUEL DESCRIPTION AND SPECIFICATIONS

15. Fuel Type	☒ Diesel Fuel (# 2) (gal/hr)	☒ Natural Gas (cf/hr)	☐ Coal (unit: /hr)	☐ Other Fuels (unit: /hr)
16. Full Load Consumption Rate	520	71410		
17. Actual Consumption Rate	400	71410		
18. Fuel Heat Content (Btu/unit, LHV)	140,000 Btu/gal	1020 Btu/scf		
19. Sulfur Content wt%	0.0015	0.0007		
20. Ash Content wt%	0.02	N/A		

STEAM DESCRIPTION AND SPECIFICATIONS

21. Steam Heat Content	NA	NA		
22. Steam Temperature (°F)	N/A	N/A		
23. Steam Pressure (psi)	N/A	N/A		
24 Steam Type	N/A	N/A	☐ Saturated ☐ Superheated	☐ Saturated ☐ Superheated

OPERATING LIMITS & SCHEDULE

25. Imposed Operating Limits (hours/year, or gallons fuel/year, etc.):	Diesel: 400 gal/hr, 75000 gal /yr; 498 MMscf Natural Gas/yr
26. Operating Schedule (hours/day, months/year, etc.):	October-May, 24 hrs/day
27. NSPS Applicability: ☒ Yes ☐ No	If Yes, which subpart: Dc

DEQ AIR QUALITY PROGRAM
1410 N. Hilton, Boise, ID 83706
For assistance, call the
Air Permit Hotline – 1-877-5PERMIT

Emissions Units - Industrial Boiler Information **Form EU5**
Revision 5
08/28/08

Please see instructions on page 2 before filling out the form.

IDENTIFICATION

1. Company Name:	2. Facility Name:	3 Facility ID No:
Idaho State University		005-00029

4. Brief Project Description: Permit additional equipment and and convert Tier II Operating Permit to a PTC

EXEMPTION

Please see IDAPA 58.01.01.222 for a list of industrial boilers that are exempt from Permit to Construct requirements.

BOILER (EMISSION UNIT) DESCRIPTION AND SPECIFICATIONS

5. Type of Request: ☐ New Unit ☐ Unpermitted Existing Unit ☒ Modification to a Unit with Permit #:T2-030317

6. Use of Boiler: ☐ % Used For Process ☐ % Used For Space Heat ☐ % Used For Generating Electricity ☒ Other: Hot water supply

7. Boiler ID Number: B18	8. Rated Capacity: ☒ 1.2 Million British Thermal Units Per Hour (MMBtu/hr) ☐ 1,000 Pounds Steam Per Hour (1,000 lb steam/hr)	
9. Construction Date:	10. Manufacturer: Laars	11. Model: RHCH1200NACF2FXXX
12. Date of Modification (if applicable): 2011? **(ask Robin)**	13. Serial Number (if available):	14. Control Device (if any): None **Note: Attach applicable control equipment form(s)**

FUEL DESCRIPTION AND SPECIFICATIONS

15. Fuel Type	☐ Diesel Fuel (#) (gal/hr)	☒ Natural Gas (cf/hr)	☐ Coal (unit: /hr)	☐ Other Fuels (unit: /hr)
16. Full Load Consumption Rate		1180		
17. Actual Consumption Rate		1180		
18. Fuel Heat Content (Btu/unit, LHV)		1020 Btu/scf		
19. Sulfur Content wt%		0.0007		
20. Ash Content wt%		N/A		

STEAM DESCRIPTION AND SPECIFICATIONS

21. Steam Heat Content	NA	NA		
22. Steam Temperature (°F)	N/A	N/A		
23. Steam Pressure (psi)	N/A	N/A		
24 Steam Type	N/A	N/A	☐ Saturated ☐ Superheated	☐ Saturated ☐ Superheated

OPERATING LIMITS & SCHEDULE

25. Imposed Operating Limits (hours/year, or gallons fuel/year, etc.):	None
26. Operating Schedule (hours/day, months/year, etc.):	June-September: 4 months/yr, 24 hrs/day
27. NSPS Applicability: ☐ Yes ☒ No	If Yes, which subpart:

DEQ AIR QUALITY PROGRAM
1410 N. Hilton, Boise, ID 83706
For assistance, call the
Air Permit Hotline – 1-877-5PERMIT

Emissions Units - Industrial Boiler Information **Form EU5**
Revision 5
08/28/08

Please see instructions on page 2 before filling out the form.

IDENTIFICATION

1. Company Name:	2. Facility Name:	3 Facility ID No:
Idaho State University		005-00029

4. Brief Project Description: Permit additional equipment and and convert Tier II Operating Permit to a PTC

EXEMPTION

Please see IDAPA 58.01.01.222 for a list of industrial boilers that are exempt from Permit to Construct requirements.

BOILER (EMISSION UNIT) DESCRIPTION AND SPECIFICATIONS

5. Type of Request: ☐ New Unit ☒ Unpermitted Existing Unit ☐ Modification to a Unit with Permit #:

6. Use of Boiler: ☐ % Used For Process ☒ % Used For Space Heat ☐ % Used For Generating Electricity ☐ Other:

7. Boiler ID Number: B36	8. Rated Capacity: ☒ 1.6 Million British Thermal Units Per Hour (MMBtu/hr) ☐ 1,000 Pounds Steam Per Hour (1,000 lb steam/hr)	
9. Construction Date: 2009	10. Manufacturer: Larrs	11. Model: RHCH1600NACF2EXX
12. Date of Modification (if applicable): N/A	13. Serial Number (if available): N/A	14. Control Device (if any): None **Note: Attach applicable control equipment form(s)**

FUEL DESCRIPTION AND SPECIFICATIONS

15. Fuel Type	☐ Diesel Fuel (#) (gal/hr)	☒ Natural Gas (cf/hr)	☐ Coal (unit: /hr)	☐ Other Fuels (unit: /hr)
16. Full Load Consumption Rate		1570		
17. Actual Consumption Rate		0		
18. Fuel Heat Content (Btu/unit, LHV)		1020 Btu/scf		
19. Sulfur Content wt%		0.0007		
20. Ash Content wt%		N/A		

STEAM DESCRIPTION AND SPECIFICATIONS

21. Steam Heat Content	NA	NA		
22. Steam Temperature (°F)	N/A	N/A		
23. Steam Pressure (psi)	N/A	N/A		
24 Steam Type	N/A	N/A	☐ Saturated ☐ Superheated	☐ Saturated ☐ Superheated

OPERATING LIMITS & SCHEDULE

25. Imposed Operating Limits (hours/year, or gallons fuel/year, etc.):	None
26. Operating Schedule (hours/day, months/year, etc.):	Emergency use only (<500 hrs per year)
27. NSPS Applicability: ☐ Yes ☒ No	If Yes, which subpart:

DEQ AIR QUALITY PROGRAM
1410 N. Hilton, Boise, ID 83706
For assistance, call the
Air Permit Hotline – 1-877-5PERMIT

Emissions Units - Industrial Boiler Information **Form EU5**
Revision 5
08/28/08

Please see instructions on page 2 before filling out the form.

IDENTIFICATION

1. Company Name:	2. Facility Name:	3 Facility ID No:
Idaho State University		005-00029

4. Brief Project Description: Permit additional equipment and and convert Tier II Operating Permit to a PTC

EXEMPTION

Please see IDAPA 58.01.01.222 for a list of industrial boilers that are exempt from Permit to Construct requirements.

BOILER (EMISSION UNIT) DESCRIPTION AND SPECIFICATIONS

5. Type of Request: ☒ New Unit ☐ Unpermitted Existing Unit ☐ Modification to a Unit with Permit #:

6. Use of Boiler: ☐ % Used For Process ☐ % Used For Space Heat ☐ % Used For Generating Electricity ☒ Other: Hot water supply

7. Boiler ID Number: B37	8. Rated Capacity: ☒ 2.5 Million British Thermal Units Per Hour (MMBtu/hr) ☐ 1,000 Pounds Steam Per Hour (1,000 lb steam/hr)	
9. Construction Date: 2013	10. Manufacturer: Precision	11. Model: FPS-58-60 or equivalent
12. Date of Modification (if applicable): N/A	13. Serial Number (if available): N/A	14. Control Device (if any): None **Note: Attach applicable control equipment form(s)**

FUEL DESCRIPTION AND SPECIFICATIONS

15. Fuel Type	☐ Diesel Fuel (#) (gal/hr)	☒ Natural Gas (cf/hr)	☐ Coal (unit: /hr)	☐ Other Fuels (unit: /hr)
16. Full Load Consumption Rate		2450		
17. Actual Consumption Rate		2450		
18. Fuel Heat Content (Btu/unit, LHV)		1020 Btu/scf		
19. Sulfur Content wt%		0.0007		
20. Ash Content wt%		N/A		

STEAM DESCRIPTION AND SPECIFICATIONS

21. Steam Heat Content	NA	NA		
22. Steam Temperature (°F)	N/A	N/A		
23. Steam Pressure (psi)	N/A	N/A		
24 Steam Type	N/A	N/A	☐ Saturated ☐ Superheated	☐ Saturated ☐ Superheated

OPERATING LIMITS & SCHEDULE

25. Imposed Operating Limits (hours/year, or gallons fuel/year, etc.):	None
26. Operating Schedule (hours/day, months/year, etc.):	June-September: 4 months/yr, 24 hrs/day
27. NSPS Applicability: ☐ Yes ☒ No	If Yes, which subpart:

DEQ AIR QUALITY PROGRAM
1410 N. Hilton, Boise, ID 83706
For assistance, call the
Air Permit Hotline – 1-877-5PERMIT

Baghouse Control Equipment **Form BCE**
Revision 6
2/18/10

Complete this form for each baghouse. Please see instructions on page 2 before filling out the form.

IDENTIFICATION

1. Company Name	2. Facility Name:
Idaho State University	

3. Brief Project Description: Permit additional equipment and and convert Tier II Operating Permit to a PTC

BAGHOUSE INFORMATION

4. Baghouse Manufacturer: Murphy-Rodgers	5. Baghouse Model: MRA	6. Baghouse Equipment ID: BH1

7 (a). Baghouse particulate matter emission concentration. **Note: Provide information in 7(a)-(c) or answer question #8 below.**	_____ gr/dscf	*Manufacturers typically provide guarantees in grains per dry standard cubic foot (gr/dscf). Provide a copy of the guarantee, or other documentation, with the application along with a description of the types of bags that must be used to achieve the emission concentration.* ***Emission concentrations less than 0.01 gr/dscf will receive additional scrutiny by DEQ and a source test of the baghouse may be required.*** *If a guarantee is not provided then you must document how you obtained the emission concentration. Without documentation the application is not complete.*
7 (b). Percentage PM_{10} Or Provide PM_{10} Emission Concentration	_____ % _____ gr/dscf	*What percentage of the PM concentration listed in question #7(a) is PM_{10}. You must provide documentation as to how the percentage was determined (i.e per the baghouse manufacturer). Without documentation the application is not complete.*
7 (c). Baghouse flow rate	1700 dscfm	*Provide the baghouse flow rate in dry standard cubic feet per minute. Actual cubic feet per minute may be given in lieu of dscfm* ***if it is documented*** *that moisture content is insignificant. You must provide documentation as to how this flow rate was determined (i.e. per the exhaust fan manufacturer, combustion evaluation, etc.). Without documentation the application is not complete.*
8. Baghouse particulate matter control efficiency. **Note: Not needed if section #7 is completed.**	99.9 % PM control 99 % PM_{10} control	*Applicant's providing the control efficiency of the baghouse must provide control efficiency for both PM and PM_{10}. Provide a copy of the control efficiency documentation with the application. Documentation must include a description of the types of bags that must be used to achieve the control efficiency. Without documentation the application is not complete.*
9. Is the baghouse equipped with a bag leak detector?	☐ Yes ☒ No	*If a bag leak detector is installed provide documentation on the leak detector, including; how the leak detector functions and what level of the output signal indicates that a bag is leaking. Without documentation the application is not complete.*

Table EI1.1: Pre-Project Potential to Emit for NSR Regulated Pollutants (Annual)

Emissions Unit	tons/year									
	$PM_{2.5}$	PM_{10}	SO_2	NO_x	CO	VOC	THAPs	Lead	$CO2_e$	GHG
Boiler No. 1: 75.4 MMscf/yr	0.29	0.29	0.023	3.77	3.17	0.21	0.07	1.9E-05		
Boiler No. 2: Coal or NG	0.022	0.022	94.9	56.2	1.9	0.12	2.61	8.1E-04		
Boiler No. 3: 173 MMscf/yr	0.657	0.657	0.052	4.32	7.26	0.476	0.17	4.3E-05		
Boiler No. 4: 468 MMscf/yr	1.78	1.78	0.14	11.70	19.7	1.29	0.45	1.2E-04		
Boiler No. 36 (Bldg 65)	0	0	0	0	0	0	0	0		
Boiler No. 37 (Bldg 38)	0	0	0	0	0	0	0	0		
Fuel Tank No. 1- Diesel	0	0	0	0	0	0	0	0		
Fuel Tank No. 2- Gasoline	0	0	0	0	0	0	0	0		
Paint Booth No. 1 (Bldg 48)	0	0	0	0	0	0	0	0		
Paint Booth No. 2 (Bldg 48)	0	0	0	0	0	0	0	0		
Paint Booth No. 3 (Bldg 22)	0	0	0	0	0	0	0	0		
Shop Baghouse No. 1 (Bldg 22)	0	0	0	0	0	0	0	0		
Totals	**2.74**	**2.74**	**95.11**	**75.99**	**32.03**	**2.09**	**3.30**	**9.9E-04**	**Not calculated**	

Table EI1.2: Post-Project Potential to Emit for NSR Regulated Pollutants (Annual)

Emissions Unit	tons/year									
	$PM_{2.5}$	PM_{10}	SO_2	NO_x	CO	VOC	THAPs	Lead	$CO2_e$	GHG
Boiler No. 1: Decommissioned	0	0	0	0	0	0	0	0	0	0
Boiler No. 2: NG only	0.124	0.124	0.0098	1.63	1.37	0.09	0.03	8.1E-06	1950	1949
Boiler No. 3: 203 MMscf/yr	0.771	0.771	0.061	5.08	8.53	0.558	0.20	5.1E-05	12183	12171
Boiler No. 4: 498 MMscf/yr + Diesel Ops	1.90	1.93	0.15	12.79	21.1	1.38	0.48	1.7E-04	30732	30700
Boiler No. 36 (Bldg 65)	0.052	0.052	0.0041	0.69	0.58	0.038	0.013	3.4E-06	818	817
Boiler No. 37 (Bldg 38)	0.082	0.082	0.0064	0.87	0.90	0.059	0.021	5.4E-06	1279	1277
Fuel Tank No. 1- Diesel	0	0	0	0	0	0.0012	0.001	0	0	0
Fuel Tank No. 2- Gasoline	0	0	0	0	0	0.583	0.010	0	0	0
Paint Booth No. 1 (Bldg 48)	0.016	0.016	0	0	0	3.88	4.07	0	0	0
Paint Booth No. 2 (Bldg 48)	0.016	0.016	0	0	0	3.88	4.07	0	0	0
Paint Booth No. 3 (Bldg 22)	0.008	0.008	0	0	0	1.80	0.63	0	0	0
Shop Baghouse No. 1 (Bldg 22)	0.021	0.021	0	0	0	0.00	0	0	0	0
Totals	**2.99**	**3.02**	**0.23**	**21.04**	**32.47**	**12.27**	**9.5**	**2.4E-04**	**46962**	**46915**

Table EI1.3: Changes in Potential to Emit for NSR Regulated Pollutants (Annual)

Emissions Unit	tons/year									
	$PM_{2.5}$	PM_{10}	SO_2	NO_x	CO	VOC	THAPs	Lead	$CO2_e$	GHG
Boiler No. 1- shared stack w/ No.2 Boiler No. 2- shared stack w/ No.1	-0.19	-0.19	-94.91	-58.35	-3.71	-0.24	-2.65	-8.20E-04	1950	1949
Boiler No. 3	0.11	0.11	0.0090	0.75	1.27	0.08	0.03	7.52E-06	12183	12171
Boiler No. 4	0.12	0.15	0.0091	1.09	1.40	0.10	0.03	0.00	30732	30700
Boiler No. 36 (Bldg 65)	0.052	0.052	0.0041	0.69	0.58	0.038	0.013	3.44E-06	818	817
Boiler No. 37 (Bldg 38)	0.082	0.082	0.0064	0.87	0.90	0.059	0.021	5.37E-06	1279	1277
Fuel Tank No. 1- Diesel	0	0	0	0	0	0.0012	0.001	0	0	0
Fuel Tank No. 2- Gasoline	0	0	0	0	0	0.58	0.010	0	0	0
Paint Booth No. 1 (Bldg 48)	0.016	0.016	0	0	0	3.88	4.07	0	0	0
Paint Booth No. 2 (Bldg 48)	0.016	0.016	0	0	0	3.88	4.07	0	0	0
Paint Booth No. 3 (Bldg 22)	0.008	0.008	0	0	0	1.80	0.63	0	0	0
Shop Baghouse No. 1 (Bldg 22)	0.021	0.021	0	0	0	0	0	0	0	0
Increase in Emissions	**0.43**	**0.46**	**0.03**	**3.4**	**4.1**	**N/A**	**N/A**	**7.1E-05**	**N/A**	**N/A**
Facility Change in Emissions	**0.25**	**0.27**	**-94.9**	**-55.0**	**0.44**	**10.2**	**6.2**	**-7.5E-04**	**46962**	**46915**

Table EI2.1: Pre-Project Potential to Emit for NSR Regulated Pollutants (Hourly)

Emissions Unit	lbs/hr					
	$PM_{2.5}$	PM_{10}	SO_2	NO_x	CO	VOC
Boiler No. 1: 32.05 MMBtu/hr	0.239	0.239	0.019	3.14	2.64	0.17
Boiler No. 2: Coal or NG	0.0128	0.0128	47.7	32.6	1.89	0.12
Boiler No. 3: 26.92 MMBtu/hr	0.201	0.201	0.016	1.32	2.22	0.145
Boiler No. 4: 72.84 MMBtu/hr NG	0.54	0.54	0.043	3.57	6.0	0.39
Boiler No. 36 (Bldg 65)	0	0	0	0	0	0
Boiler No. 37 (Bldg 38)	0	0	0	0	0	0
Fuel Tank No. 1- Diesel	0	0	0	0	0	0
Fuel Tank No. 2- Gasoline	0	0	0	0	0	0
Paint Booth No. 1 (Bldg 48)	0	0	0	0	0	0
Paint Booth No. 2 (Bldg 48)	0	0	0	0	0	0
Paint Booth No. 3 (Bldg 22)	0	0	0	0	0	0
Shop Baghouse No. 1 (Bldg 22)	0	0	0	0	0	0
Totals	**0.99**	**0.99**	**47.78**	**40.63**	**12.75**	**0.83**

Table EI2.2: Post-Project Potential to Emit for NSR Regulated Pollutants (Hourly)

Emissions Unit	lbs/hr					
	$PM_{2.5}$	PM_{10}	SO_2	NO_x	CO	VOC
Boiler No. 1: 32.05 MMBtu/hr	0.000	0.000	0.000	0.00	0.00	0.00
Boiler No. 2: NG only, no baghouse	0.171	0.171	0.014	2.25	1.89	0.12
Boiler No. 3: 26.92 MMBtu/hr	0.201	0.201	0.016	1.32	2.22	0.15
Boiler No. 4: Diesel or NG	0.54	0.54	0.043	3.60	6.0	0.39
Boiler No. 36 (Bldg 65)	0.012	0.012	9.4E-04	0.16	0.13	0.0086
Boiler No. 37 (Bldg 38)	0.019	0.019	0.0015	0.20	0.21	0.013
Fuel Tank No. 1- Diesel	0	0	0	0	0	0.002
Fuel Tank No. 2- Gasoline	0	0	0	0	0	1.14
Paint Booth No. 1 (Bldg 48)	0.0067	0.0067	0	0	0	1.62
Paint Booth No. 2 (Bldg 48)	0.0067	0.0067	0	0	0	1.62
Paint Booth No. 3 (Bldg 22)	0.0064	0.0064	0	0	0	1.50
Shop Baghouse No. 1 (Bldg 22)	0.0047	0.0047	0	0	0	0.00
Totals	**0.97**	**0.97**	**0.07**	**7.53**	**10.45**	**6.56**

Table EI2.3: Changes in Potential to Emit for NSR Regulated Pollutants (Hourly)

Emissions Unit	lbs/hr					
	$PM_{2.5}$	PM_{10}	SO_2	NO_x	CO	VOC
Boiler No. 1	-0.24	-0.24	-0.02	-3.14	-2.64	-0.17
Boiler No. 2	0.16	0.16	-47.69	-30.35	0	0
Boiler No. 3	0	0	0	0	0	0
Boiler No. 4	0	0	0	0.03	0	0
Boiler No. 36 (Bldg 65)	0.012	0.012	0.0009	0.157	0.13	0.009
Boiler No. 37 (Bldg 38)	0.019	0.019	0.0015	0.198	0.21	0.013
Fuel Tank No. 1- Diesel	0	0	0	0	0	0.002
Fuel Tank No. 2- Gasoline	0	0	0	0	0	1.14
Paint Booth No. 1 (Bldg 48)	0.0067	0.0067	0	0	0	1.62
Paint Booth No. 2 (Bldg 48)	0.0067	0.0067	0	0	0	1.62
Paint Booth No. 3 (Bldg 22)	0.0064	0.0064	0	0	0	1.50
Shop Baghouse No. 1 (Bldg 22)	0.0047	0.0047	0	0	0	0
Increase in Emissions	**0.06**	**0.06**	**0.00**	**0.38**	**0.33**	**NA**
Facility Change in Emissions	**-0.02**	**-0.02**	**-47.7**	**-33.1**	**-2.30**	**5.73**

Idaho State UNIVERSITY

CAMPUS MAP

MAY 2011

Produced by:
Facilities Services
282-2209

Note: No changes authorized without Facilities Services approval

- Client Parking
- Disabled Parking
- General Parking
- Housing Parking
- Meter Parking
- Official Parking
- Reduced Parking
- Reserved Parking
- Visitors Parking
- ADA Access & Elevator
- Bus Stop
- Emergency Phone
- Hospital - Vacant
- Service Access
- Off - Campus Addresses
- Non - ISU

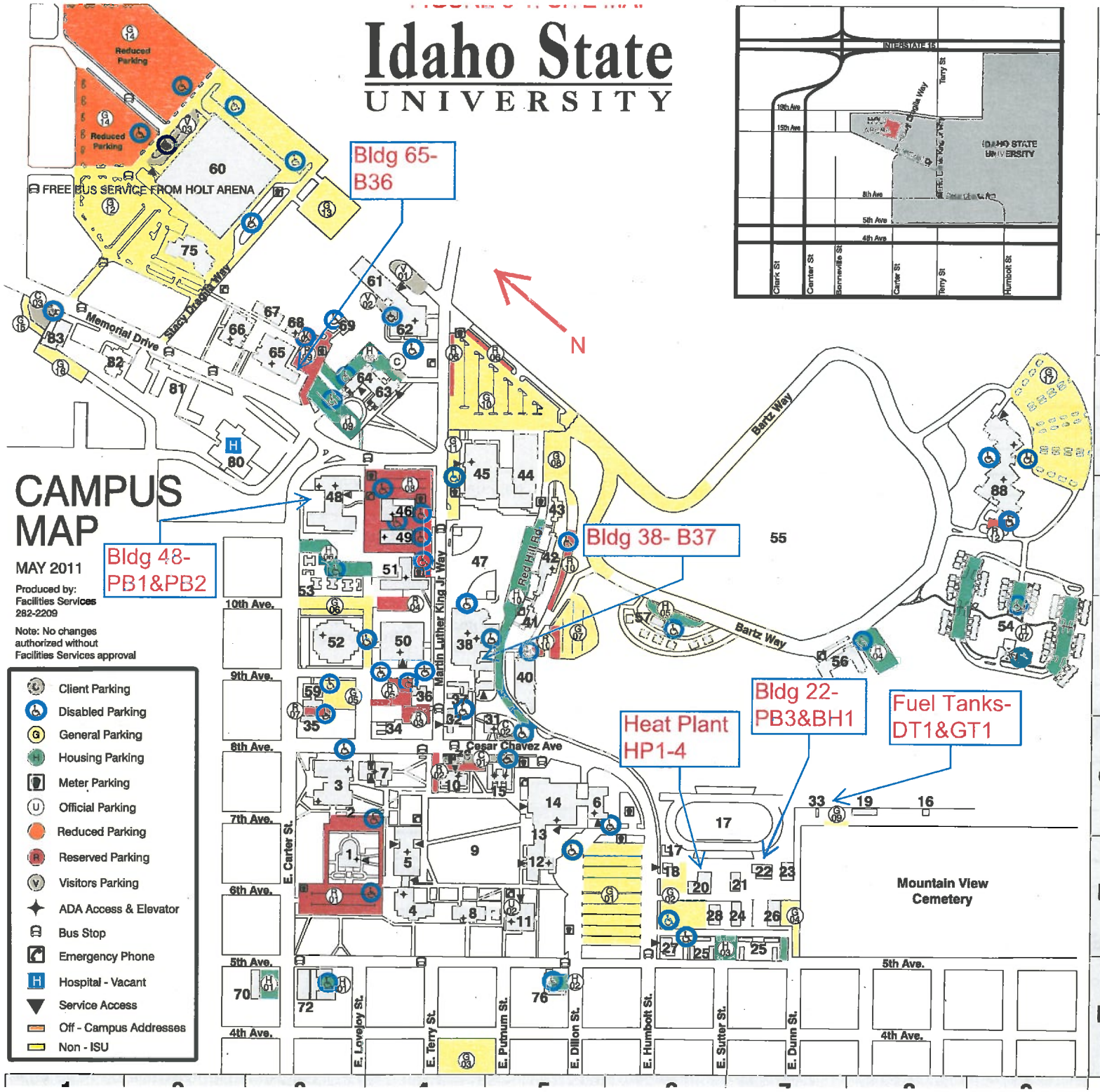

FORM PP

	29	ALUMNI HOUSE - MAGNUSC	7th
	28	ART / MUSEUM STORAGE (A	H6
	74	AVIATION MECH (AIR)	POCATELLO AIRPORT T102
A	55	BARTZ FIELD (BARTZ)	E7
	65	BIOLOGY - GALE LIFE SCIENCE (LS)	D3
	58	BUSCO PARK	G6
	05	BUSINESS ADMINISTRATION (BA)	H4
	86	BUSINESS / TECH. CENTER	1651 ALVIN RICKEN DR
	47	CADET FIELD (CADET)	E4
	06	CHILD CARE - EARLY LEARNING CENTER / ASISU	G5
	48	COLLEGE OF TECHNOLOGY (RFC)	E3
	35	COLONIAL HALL (COL)	G3
	84	CONTINUING EDUCATION - ISU (CONED)	1001 N.7th
B	59	CREDIT UNION - ISU FEDERAL	F3
	17	DAVIS FIELD HOUSE	G6
	37	DENTAL HYGIENE CLINIC - TRANMER (CLIN)	F4
	32	DENTAL HYGIENE SCIENCES - TRANMER (DA)	G4
	71	DIESEL ELECTRIC - DOWLING (DB)	510 S. MAIN
	73	DIESEL MECHANICS - ARMORY (ARM)	1257 S. 2nd
	62	EDUCATION (ED)	C4
	07	ENGINEERING - LILLIBRIDGE (LEL)	G4
	79	ENGINEERING - MCERC (MEASUREMENT/CNTRL ENGR. RESEARCH CTR.)	1090 S. 2nd
C	83	FAMILY MEDICINE / DENTAL SCIENCES (FMED/DS)	C1
	11	FINE ARTS (FA)	H5
	01	FRAZIER HALL (FRAZ)	H3
	33	FUEL STATION - ISU	G7
	63	GARRISON HALL (GARR)	D4
	15	GRAVELEY HALL (GRAV)	G5
	19	GROUNDS SHOP	G8
	16	HAZARDOUS WASTE	G8
	20	HEAT PLANT	H6
D	60	HOLT ARENA (HOLT)	B2
	80	HOSPITAL - VACANT	D2
	82	HUMAN DEVELOPMENT CENTER (HDC)	D1
	13	HYPOSTYLE	G5
	49	INDUSTRIAL CRAFTS (IC)	E4
	78	INFORMATION BOOTH	G4
	77	LAW ENFORCEMENT (LAW)	1480 BARTON RD
	52	LDS INSTITUTE OF RELIGION (INST)	F3
	67	LECTURE CENTER (LC)	C3
	04	LIBERAL ARTS - KEGEL (LA)	H4
	50	LIBRARY - ELI M. OBOLER (LIBR)	F4
E	87	LINEAR ACCELERATOR	1500 ALVIN RICKEN DR
	89	LINEAR ACCELERATOR (INSPECTION TECH. RESEARCH & DEV. LAB)	1511 FORTRESS RD
	18	M & O - FACILITIES SERVICES	H6
	24	MAINTENANCE / WELDING SHOPS	H7
	12	MUSEUM - IDAHO MUSEUM OF NATL. HISTORY (MUSE)	H5
	66	NURSING - BECKLEY (NURS)	C2
	81	NURSING HOME - POCATELLO CARE & REHAB	D2
	88	PERFORMING ARTS CENTER - STEPHENS (SPAC)	D9
	08	PHARMACY - LEONARD HALL (LH)	H4
	03	PHYSICAL SCIENCE / COMPLEX (PS)/(PSC)	G3
F	69	PLANT SCIENCES (PLSCI)	C3
	30	PRESIDENT'S RESIDENCE - SERVEL HOUSE	—
	27	PUBLIC SAFETY	H6
	09	QUADRANGLE - HUTCHINSON MEMORIAL (QUAD)	G4
	44	RECREATION FACILITY (REC)	D5
	40	RED HILL (REDHL)	F5
	45	REED GYMNASIUM (GYM)	D4
	38	RENDEZVOUS (REND)	F4
	26	SHIPPING & RECEIVING / MAINTENANCE SHOPS	H7
G	22	SHOPS	H7
	68	SPEECH PATHOLOGY / AUDIOLOGY (SPA)	C3
	75	SPORTS & ORTHOPEDIC CENTER (SPMED)	C2
	34	ST. JOHN'S CENTER (ST. JOHN)	G4
	31	STUDENT HEALTH CENTER	G5
	14	STUDENT UNION & BOOKSTORE (PSUB)	G5
	02	SWANSON ARCH	G3
	51	TRADE & TECHNOLOGY (T&T)	E4
	21	TRANSPORTATION SERVICES SHOP	H7
H	36	UNIVERSITY BIBLE CHURCH (UBC)	F4
	23	UNIVERSITY STORES - WAREHOUSE #2	H7
	46	VOCATIONAL ARTS (VOART)	E4
		HOUSING	
	70	5th STREET	Apt. I3
	76	GRADUATE HOUSING	Apt. I5
	57	McINTOSH MANOR	Apt. F6
	42	OWEN-REDFIELD COMPLEX (OWEN)	Dorm E5
	43	DYER HALL	Dorm E5
	41	NICHOLS HALL	Dorm F5
I	53	PULLING COURTS	Apt. E3
	38	RENDEZVOUS (REND)	Apt. F4
	54	RIDGE CREST	Apt. F9
	56	SCHUBERT HEIGHTS	Apt. F7
	64	TURNER HOUSE (TURN)	Dorm D4
	25	UNIVERSITY COURTS	Apt. H7
	72	WEST CAMPUS	Apt. I3

	DEQ AIR QUALITY PROGRAM 1410 N. Hilton, Boise, ID 83706 For assistance, call the **Air Permit Hotline - 1-877-5PERMIT**	**PERMIT TO CONSTRUCT APPLICATION** Revision 3 4/5/2007

Please see instructions on page 2 before filling out the form.

Company Name:	Idaho State University
Facility Name:	
Facility ID No.:	005-00029
Brief Project Description:	Permit additional equipment including paint booths and convert Tier II Operating Permit to a PTC

SUMMARY OF AIR IMPACT ANALYSIS RESULTS - CRITERIA POLLUTANTS

		1.		2.	3.	4.		5.
Criteria Pollutants	**Averaging Period**	**Significant Impact Analysis Results (µg/m3)**	**Significant Contribution Level (µg/m3)**	**Full Impact Analysis Results (µg/m3)**	**Background Concentration (µg/m3)**	**Total Ambient Impact (µg/m3)**	**NAAQS (µg/m3)**	**Percent of NAAQS**
PM_{10}	24-hour	Not required	5	Not required			150	
	Annual		1				50	
SO_2	3-hr		25				1300	
	24-hr		5				365	
	Annual		1				80	
NO_2	Annual		1				100	
CO	1-hr		2000				10000	
	8-hr		500				40000	

DEQ AIR QUALITY PROGRAM
1410 N. Hilton, Boise, ID 83706
For assistance, call the
Air Permit Hotline - 1-877-5PERMIT

PERMIT TO CONSTRUCT APPLICATION

Revision 3
3/27/2007

Please see instructions on page 2 before filling out the form.

Company Name:	Idaho State University
Facility Name:	
Facility ID No.:	005-00029
Brief Project Description:	Permit additional equipment including paint booths and convert Tier II Operating Permit to a PTC

POINT SOURCE STACK PARAMETERS

1.	2.	3a.	3b.	4.	5.	6.	7.	8.	9.	10.
Emissions units	**Stack ID**	**UTM Easting (m)**	**UTM Northing (m)**	**Base Elevation (m)**	**Stack Height (m)**	**Modeled Diameter (m)**	**Stack Exit Temperature (K)**	**Stack Exit Flowrate (acfm)**	**Stack Exit Velocity (m/s)**	**Stack orientation (e.g., horizontal, rain cap)**
Point Source(s)										
See Table 9-1										

	DEQ AIR QUALITY PROGRAM 1410 N. Hilton, Boise, ID 83706 For assistance, call the **Air Permit Hotline - 1-877-5PERMIT**	**PERMIT TO CONSTRUCT APPLICATION** Revision 3 4/5/2007

Please see instructions on page 2 before filling out the form.

Company Name:	Idaho State University
Facility Name:	
Facility ID No.:	005-00029
Brief Project Description:	Permit additional equipment including paint booths and convert Tier II Operating Permit to a PTC

FUGITIVE SOURCE PARAMETERS

1.	2.	3a.	3b.	4.	5.	6.	7.	8.	9.	10.
Emissions units	**Stack ID**	**UTM Easting (m)**	**UTM Northing (m)**	**Base Elevation (m)**	**Release Height (m)**	**Easterly Length (m)**	**Northerly Length (m)**	**Angle from North (°)**	**Initial Vertical Dimension (m)**	**Initial Horizontal Dimension (m)**
Area Source(s)										
Not applicable										
Volume Source(s)										
Not applicable										

DEQ AIR QUALITY PROGRAM
1410 N. Hilton, Boise, ID 83706
For assistance, call the
Air Permit Hotline - 1-877-5PERMIT

PERMIT TO CONSTRUCT APPLICATION

Revision 3
4/5/2007

Please see instructions on page 2 before filling out the form.

Company Name:	Idaho State University
Facility Name:	
Facility ID No.:	005-00029
Brief Project Description:	Permit additional equipment including paint booths and convert Tier II Operating Permit to a PTC

BUILDING AND STRUCTURE INFORMATION

1.	2.	3.	4.	5.	6.	7.
Building ID Number	**Length (ft)**	**Width (ft)**	**Base Elevation (m)**	**Building Height (m)**	**Number of Tiers**	**Description/Comments**
See Table 8-1						

DEQ AIR QUALITY PROGRAM
1410 N. Hilton, Boise, ID 83706
For assistance, call the
Air Permit Hotline – 1-877-5PERMIT

AIR PERMIT APPLICATION

Revision 6
10/7/09

For each box in the table below, CTRL+click on the blue underlined text for instructions and information.

IDENTIFICATION	
1. Company Name: Idaho State University	2. Facility Name:
3. Brief Project Description:	Permit additional equipment including boilers and paint booths and convert Tier II Operating Permit to a PTC

APPLICABILITY DETERMINATION	
4. List applicable subparts of the New Source Performance Standards (NSPS) (40 CFR part 60). Examples of NSPS affected emissions units include internal combustion engines, boilers, turbines, etc. The applicant must thoroughly review the list of affected emissions units.	List of applicable subpart(s): Dc, IIII ☐ Not Applicable
5. List applicable subpart(s) of the National Emission Standards for Hazardous Air Pollutants (NESHAP) found in 40 CFR part 61 and 40 CFR part 63. Examples of affected emission units include solvent cleaning operations, industrial cooling towers, paint stripping and miscellaneous surface coating. EPA has a web page dedicated to NESHAP that should be useful to applicants.	List of applicable subpart(s): ZZZZ, CCCCCC, HHHHHH ☐ Not Applicable
6. For each subpart identified above, conduct a complete a regulatory analysis using the instructions and referencing the example provided on the following pages. **Note** - Regulatory reviews must be submitted with sufficient detail so that DEQ can verify applicability and document in legal terms why the regulation applies. Regulatory reviews that are submitted with insufficient detail will be determined incomplete.	☐ A detailed regulatory review is provided (Follow instructions and example). ☐ DEQ has already been provided a detailed regulatory review. Give a reference to the document including the date.

IF YOU ARE UNSURE HOW TO ANSWER ANY OF THESE QUESTIONS, CALL THE AIR PERMIT HOTLINE AT 1-877-5PERMIT

It is emphasized that it is the applicant's responsibility to satisfy all technical and regulatory requirements, and that DEQ will help the applicant understand what those requirements are prior to the application being submitted but that DEQ will not perform the required technical or regulatory analysis on the applicant's behalf.

AIR QUALITY PERMIT TO CONSTRUCT MODIFICATION APPLICATION FORM DOCUMENTATION

Idaho State University
Facilities Services, Building No. 18
749 E. Humbolt, Stop 8137
Pocatello, Idaho 83209-8137

February 2013

Prepared for: Idaho State University
Facilities Services, Building No. 18
749 E. Humbolt, Stop 8137
Pocatello, Idaho 83209-8137

For the Facility at: Heat Plant, Building No. 20
715 E. Humbolt, Stop 8137
Pocatello, Idaho 83209-8137

Prepared by: TORF Environmental Management
3459 E. Boulder Heights Drive
Boise, Idaho 83712

(208) 345-7222
(208) 345-8285 FAX
www.torf.us

Sarah L. Stine, P.E.
Sr. Engineer
(208) 571-2393

Chris Johnson
Meteorologist

TORF ENVIRONMENTAL MANAGEMENT

THIS PAGE INTENTIONALLY LEFT BLANK FOR TWO-SIDED PRINTING

TORF
ENVIRONMENTAL
MANAGEMENT

Table of Contents

1. SUMMARY 1-1

2. GENERAL INFORMATION – FORM GI DOCUMENTATION 2-1

3. GENERAL EMISSION UNITS – FORM EU0 DOCUMENTATION 3-1
   - 3.1 DT1- Diesel Storage Tank 3-1
   - 3.2 GT1 - Gasoline Storage Tank 3-1
   - 3.3 Biodiesel Production 3-2

4. SPRAY PAINT BOOTHS – FORM EU3 DOCUMENTATION 4-1
   - 4.1 PB1 & PB2- Automotive Shop 4-1
   - 4.2 PB3 - Maintenance Shop 4-2

5. BOILERS – FORM EU5 DOCUMENTATION 5-1
   - 5.1 Heat Plant 5-1
   - 5.2 Boiler 18 5-2
   - 5.3 Boiler 36 5-2
   - 5.4 Boiler 37 5-2

6. BAGHOUSE CONTROL EQUIPMENT – FORM BCE DOCUMENTATION 6-1

7. EMISSION INVENTORY WORKBOOK FORMS EI1-EI2 DOCUMENTATION 7-1
   - 7.1 Criteria Pollutant Facility-Wide Point Source Emissions 7-1
   - 7.2 Criteria Pollutant Facility-Wide Fugitive Emissions 7-1
   - 7.3 Criteria Pollutant Facility-Wide Point Source & Fugitive Emissions Change 7-1
   - 7.4 Toxic Air Pollutant Facility-Wide Emissions Change 7-1
   - 7.5 Hazardous Air Pollutant Facility-Wide Emissions 7-1
   - 7.6 Greenhouse Gas Facility-Wide Emissions 7-2
   - 7.7 Facility-Wide Total Pollutant Emissions Increase 7-2

8. PLOT PLAN – FORM PP DOCUMENTATION 8-1
   - 8.1 Facility Boundary 8-1
   - 8.2 Building Dimensions 8-1

9. MODELING INFORMATION 9-1
   - 9.1 Modeling Applicability Assessment 9-1

9.1.1 Criteria Pollutant Modeling Applicability 9-1
9.1.2 TAPs Modeling Applicability 9-1
9.2 Modeling Analyses Methodology 9-1
9.2.1 Model Used 9-1
9.2.2 Criteria Pollutant Modeling Methodology 9-2
9.2.3 TAPs Modeling Methodology 9-2
9.3 Model Input Data 9-2
9.3.1 Meteorological Data, Receptor Network 9-2
9.3.2 Emissions Release Parameters 9-5
9.3.3 Elevation Data 9-6
9.4 Evaluation of Compliance with Standards 9-6

10. FEDERAL REGULATION APPLICABILITY – FORM FRA DOCUMENTATION 10-1
10.1 New Source Performance Standards 10-1
10.1.1 Subpart Ce: Emission Guidelines for Hospital/Medical/ Infectious Waste Incinerators 10-1
10.1.2 Subpart Dc: Small Industrial-Commercial-Institutional Steam Generating Units 10-2
10.1.3 Subpart Ec: Standards of Performance for Hospital/Medical/Infectious Waste Incinerators 10-4
10.1.4 Subpart IIII: Stationary Compression Ignition Internal Combustion Engines 10-5
10.2 National Emission Standards for Hazardous Air Pollutants 10-8
10.2.1 Subpart ZZZZ: Stationary Reciprocating Internal Combustion Engines 10-8
10.2.2 Subpart CCCCCC: Gasoline Dispensing Facilities 10-9
10.2.3 Subpart HHHHHH: Paint Stripping and Misc. Surface Coating Operations 10-12
10.2.4 Subpart JJJJJJ: Industrial, Commercial and Institutional Boilers at Area Sources 10-15
10.3 Prevention of Significant Deterioration 10-16

11. STATE OF IDAHO REGULATORY REVIEW 11-1
11.1 Certification of Documents- 58.01.01.123 11-1
11.2 Demonstration of Preconstruction Compliance with Toxic Standards- 58.01.01.210 11-1
11.3 Ambient Air Quality Standards for Specific Air Pollutants- 58.01.01.577 11-1
11.4 Toxic Air Pollutants Non-carcinogenic Increments – 58.01.01.585 11-1

11.5 Toxic Air Pollutants Carcinogenic Increments – 58.01.01.586 11-1
11.6 New Source Performance Standards – 58.01.01.590 11-1
11.7 National Emission Standards for Hazardous Air Pollutants – 58.01.01.591 11-1
11.8 Visible Emissions – 58.01.01.625 11-1
11.9 Rules for the Control of Fugitive Dust – 58.01.01.650 11-2
11.10 Fuel Burning Equipment – Particulate Matter – 58.01.01.675 11-2
11.11 Standards for New Sources – 58.01.01.676 11-2
11.12 Particulate Matter – Process Weight Limitations – 58.01.01.700 11-2
11.13 Rules for Sulfur Content of Fuels 11-2

List of Tables

Table 3-1: Diesel Storage Tank Emissions 3-1
Table 3-2: Gasoline Storage Tank Emissions 3-2
Table 3-3: Biodiesel Production Potential Emissions 3-2
Table 4-1: Paint Booths Emissions Analysis 4-3
Table 5-1: Proposed Heat Plant Boiler Operations 5-1
Table 5-2: Boiler No. 1 (HP1) Modification Emission Analysis 5-3
Table 5-3a: Boiler No. 2 (HP2) Modification Emission Analysis (Coal) 5-4
Table 5-3b: Boiler No. 2 (HP2) Modification Emission Analysis (Natural Gas) 5-5
Table 5-4: Boiler No. 3 (HP3) Modification Emission Analysis 5-6
Table 5-5a: Boiler No. 4 (HP4) Modification Emission Analysis (Natural Gas) 5-7
Table 5-5b: Boiler No. 4 (HP4) Modification Emission Analysis (Diesel) 5-8
Table 5-6: Boiler No. 36 (B36) Modification Emission Analysis 5-9
Table 5-7: Boiler No. 37 (B37) Modification Emission Analysis 5-10
Table 6-1: Maintenance Shop Baghouse (BH1) Emissions Analysis 6-1
Table 7-1: Post-Project Change in HAP/TAP Emissions 7-3
Table 7-2: Greenhouse Gas Emissions 7-4
Table 7-3: Post-Project Uncontrolled Potential to Emit 7-5
Table 8-1: Building Information 8-1
Table 9-1: Emission Source Release Data 9-6
Table 9-2: Emission Source Pollutant Rates 9-6
Table 9-3: Comparison of Predicted Impacts with Applicable Ambient Standards 9-7
Table 10-1: Emergency Generators Equipment List 10-17

List of Figures

Figure 8-1: Campus Map/Site Plan 8-2
Figure 9-1 Model Facility and Source Layout 9-4
Figure 9-2: Model Domain and Receptor Network 9-5

Appendices

Appendix A: Emission Calculations
Appendix B: Equipment Specification Sheets
Appendix C: Material Safety Data Sheets
Appendix D: Modeling Protocol and Correspondence

AIR QUALITY PERMIT TO CONSTRUCT MODIFICATION
Idaho State University
Facilities Services, Building No. 18
749 E. Humbolt, Stop 8137
Pocatello, Idaho 83209-8137

---

1. SUMMARY

Idaho State University (ISU) proposes new and modified sources of air emissions at its campus in Pocatello, Idaho. ISU operates under a Tier II Operating Permit and proposes terminating the operating permit and receiving a Permit to Construct.

The results of the inventory of estimated regulated air emissions associated with the facility modifications and air dispersion modeling of those emissions demonstrate that the facility is eligible to receive an Idaho Air Quality Permit to Construct (PTC).

The modified facility will not be a major stationary source for the purposes of the Permit to Construct requirements.[1] Neither actual nor potential criteria pollutant emissions exceed the 250 tons per year threshold that would qualify the facility as a major source. The combined input duty of all fossil-fuel fired boilers is less than 250 British thermal units (Btu) per hour.

The modified facility will not qualify the facility as a Major Facility in accordance with IDAPA 58.01.01.008.10 (Tier 1).[2] Emissions of individual hazardous air pollutants (HAP) are below the 10 ton per year threshold and total HAP emissions are below 25 tons per year. Neither actual nor potential emissions of individual criteria pollutants exceed the 100 tons per year threshold. The potential emissions of greenhouse gases are less than the 100,000 tons per year of CO_2 equivalent threshold.

Emissions of criteria pollutants from new and modified sources are below modeling thresholds listed in the Idaho DEQ Air Quality Modeling Guidelines.[3] Air dispersion modeling indicates that ambient concentrations of all Toxic Air Pollutants (TAPs) are within acceptable levels.[4]

---

[1] Idaho Department of Environmental Quality (IDEQ), Rules For The Control Of Air Pollution In Idaho, IDAPA 58 Title 01, Chapter 01, Section 200.
[2] Ibid, Section 008.10.
[3] Idaho Department of Environmental Quality, State Of Idaho Guideline For Performing Air Quality Impact Analyses Doc. ID AQ-011, rev. 2, July 2011.
[4] Ibid., Section 210.08.

2. GENERAL INFORMATION – FORM GI DOCUMENTATION

ISU currently operates under Tier II Operating Permit No. T2-030317, issued August 2, 2006.

3. GENERAL EMISSION UNITS – FORM EUO DOCUMENTATION

There are two General Emission Units associated with this permit modification.

3.1 DT1- Diesel Storage Tank

Diesel is stored in a 5000-gallon capacity tank located in the southeast corner of campus. The ConVault tank consists of a primary steel tank, high-density polyethylene secondary containment and an exterior concrete vault. Equipment specifications are provided in Appendix B. The tank is a part of a two chambered vessel with the other chamber containing gasoline. The diesel tank is equipped with a roof-mounted, 2-inch diameter vent stack open to the atmosphere.

The diesel tank is refilled via a supply truck approximately once per month. Purchase records for 2011-2012 are provided in Appendix A and average 35,000 gallons per year. DT1 emission calculations from standing and working losses based on diesel throughput of 80,000 gallons per year are provided in Appendix A and summarized in Table 3-1, below. Almost all of the emissions are generated during tank filling. ISU is planning on installing a vapor recovery system on the diesel tank in 2013 which will reduce emissions significantly. However, to demonstrate compliance for this permit action, emissions are estimated using the existing equipment.

Table 3-1: Diesel Storage Tank Emissions

Capacity	Annual Thruput	Overall Emission Rate		Component	Emissions	
gal	gal/yr	lb/hr_{MAX}	ton/yr		lbs/hr	tons/yr
5000	80,000	0.0024	0.0012	Naphthalene	0.0024	0.0012
				Toluene	0.0024	0.0012
				VOC	0.0024	0.0012

3.2 GT1 - Gasoline Storage Tank

Gasoline is stored in a 5000 gallon capacity tank located in the southeast corner of campus. The ConVault tank consists of a primary steel tank, high-density polyethylene secondary containment and an exterior concrete vault. Equipment specifications are provided in Appendix B. The tank is a part of a two chambered vessel with the other chamber containing diesel. The gasoline tank is equipped with a roof-mounted, 2-inch diameter vent stack open to the atmosphere.

The gasoline tank is refilled via a supply truck approximately twice per month. Purchase records for 2011-2012 are provided in Appendix A and average 59,000 gallons per year. GT1 emission calculations from standing and working losses based on gasoline throughput of 80,000 gallons per year are provided in Appendix A and summarized in Table 3-2, below. ISU is planning on installing a vapor recovery system on the gasoline tank in 2013 which will reduce emissions significantly. However, to demonstrate compliance for this permit action, emissions are estimated using the

existing equipment.

Table 3-2: Gasoline Storage Tank Emissions

Capacity	Annual Thruput	Overall Emission Rate		Component	Emissions	
gal	gal/yr	lb/hr_{MAX}	ton/yr		lbs/hr[1]	tons/yr
5000	80,000	1.14	0.58	Benzene	1.25E-03	0.0055
				Ethyl alcohol	0.017	0.0085
				Toluene	0.009	0.0045
				VOC	1.14	0.58

1. Benzene hourly emissions are on an annual basis. All other hourly emissions are on a 24-hr basis.

3.3 Biodiesel Production

ISU recycles used cooking oil from its food service facilities to produce biodiesel that fuels a small utility vehicle. The biodiesel is produced both on and off-campus in a portable unit. The process involves reacting the used oil with sodium methoxide to convert the triglyceride esters of the cooking oil into the mono-alkyl esters of biodiesel. Other steps may include drying, filtering, and decanting.

There are potential VOC emissions from this process, but they are minimal. To facilitate mixing during the reaction step, the oil is heated to approximately 130 degrees F. This is well below the boiling point of the oil.

Currently ISU is processing approximately 40 gallons of oil per week. Table 3-3, below, summarizes the primary ingredients in the process. If very conservative (high) emission rates are assumed of the volatile ingredients, the maximum fugitive VOC emissions per year would be less than 0.2 tons/year. Because of the minimal actual emissions associated with this process, ISU requests concurrence from the Idaho DEQ that biodiesel production activities do not need to be included in this permit modification.

Table 3-3: Biodiesel Production Potential Emissions

Biodiesel Conversion	Recipe	Processed Amount (gal/wk)	Specific Gravity	Processed Amount (lb/wk)	Processed Amount (lb/yr)	Max. Estimated Emissions	
						(%)	(tons/yr)
Cooking Oil	1 gal	40	0.92	306.9	15959	1%	0.08
Methanol	0.2 gal	8	0.79	52.7	2741	5%	0.07
KOH	0.1 lb/gal	--	--	4.0	208	0%	0

4. SPRAY PAINT BOOTHS – FORM EU3 DOCUMENTATION

Three spray booths for the application of liquid coatings are located on campus.

4.1 PB1 & PB2- Automotive Shop

Two automotive part coating spray booths, Paint Booths 1 and 2, located in the Technology Building (Building 48) are used by students in the automotive curriculum. Each booth is equipped with an exhaust fan which discharges through separate roof stacks. Coatings are applied with High Pressure Low Volume (HPLV) and Reduced Pressure (RP) spray guns with a minimum 65% transfer efficiency. The spray booths are equipped and overspray filters with a filtration efficiency of greater than 99%. Equipment specification sheets are provided in Appendix B.

Material safety data sheets for the automotive coatings used in the booths are provided in Appendix C. The paint booths are not used every day and the maximum daily usage is 2 gallons per booth. For the permit analysis, emissions are estimated using 5 gallons of coating per booth per day and 1000 gallons of coating per booth per year. The emission calculations are provided in Table 4-1. All volatile wet coating components are assumed to be completely emitted. All wet coating particulate emissions are conservatively assumed to be $PM_{2.5}$.

<u>Sample calculation for the acetone in BASF DP26:</u>

Acetone is a VOC and a TAP.
Coating Permit Analysis Quantity = 5 gal/day
BASF DP26 Coating Density (per MSDS) = 11.57 lb/gal
" " " Acetone concentration (per MSDS) = 5 wt%
VOC Emission Factor (EF) = 100%
58.01.01.585 TAP Emission Screening Level for acetone = 119 lb/hr

$$\text{Acetone Spray Rate} = \frac{5\text{ gal DP26}}{\text{day}} * \frac{11.57\text{ lb DP26}}{\text{gallon}} * \frac{0.05\text{ lb acetone}}{\text{lb DP26}} * \frac{\text{day}}{24\text{ hr}} = 0.12\text{ lb/hr acetone}$$

All auto booth coatings containing acetone are evaluated similarly. The highest hourly spray rate is used for the auto booth TAP analysis.

Max Acetone Spray Rate = 0.34 lb/hr (from BASF DC5600)

Auto Booths Acetone Emission Rate = 0.34 lb/hr * 100% VOC EF * 2 booths = 0.68 lb/hr acetone

Sample calculation for the chromium in R-M EP589 Primer:

Chromium is a non-volatile HAP and TAP.
Coating Permit Analysis Quantity = 5 gal/day
R-M EP589 Coating Density (per MSDS) = 11.46 lb/gal
" " " Chromium concentration (per MSDS) = 10 wt%
Paint gun transfer efficiency = 65%
Booth filter minimum particulate control efficiency = 99%
58.01.01.585 TAP Emission Screening Level for chromium = 0.033 lb/hr

$$\text{Chromium Spray Rate} = \frac{5\text{ gal EP589}}{\text{day}} * \frac{11.46\text{ lb EP589}}{\text{gallon}} * \frac{0.1\text{ lb Cr}}{\text{lb EP589}} * \frac{\text{day}}{24\text{ hr}} = 0.24\text{ lb/hr chromium}$$

$$\text{Chromium Spray Rate} = \frac{1000\text{ gal EP589}}{\text{year}} * \frac{11.46\text{ lb EP589}}{\text{gallon}} * \frac{0.1\text{ lb Cr}}{\text{lb EP589}} * \frac{\text{ton}}{2000\text{ lb}} = 0.57\text{ ton/yr Cr}$$

R-M EP589 is the only coating that contains chromium.

$$\text{Cr Emission Rate} = \frac{0.24\text{ lb Cr}}{\text{hr}} * \frac{(1-0.65)\text{ lb to filter}}{\text{lb sprayed}} * \frac{(1-0.99)\text{ lb emit}}{\text{lb to filter}} * 2\text{ booths} = 0.0017\text{ lb/hr Cr}$$

$$\text{Cr Emission Rate} = \frac{0.57\text{ tn Cr}}{\text{yr}} * \frac{(1-0.65)\text{ lb to filter}}{\text{lb sprayed}} * \frac{(1-0.99)\text{ lb emit}}{\text{lb to filter}} * 2\text{ booths} = 0.004\text{ ton/yr Cr}$$

4.2 PB3 - Maintenance Shop

One coating spray booth, Paint Booth 3, located in the Maintenance Shop (Building 22) is used by facility staff to paint and/or finish wooden furniture and other items that are fabricated or repaired on-site. The booth is equipped with an exhaust fan which discharges through a roof stack. Coatings are applied with High Pressure Low Volume (HPLV) spray guns with a minimum 65% transfer efficiency. The spray booth is equipped and overspray filters with a filtration efficiency of greater than 99%. Equipment specification sheets are provided in Appendix B.

Material safety data sheets for the wood coatings used in the booth are provided in Appendix C. The paint booth is not used every day and the maximum daily usage is 1 gallon. In 2012, less than 100 gallons of total coatings were purchased for the Maintenance Shop. For the permit analysis, emissions are estimated using 5 gallons of coating per day and 500 gallons of coating per year. The emission calculations are provided in Table 4-1. All volatile wet coating components are assumed to be completely emitted. All wet coating particulate emissions are assumed to be $PM_{2.5}$.

Criteria, HAP and TAP emissions from the PB3 are calculated in the same manner as those from PB1 and PB2. Refer to Section 4.1 for sample calculations.

Table 4-1: Paint Booths Emissions Analysis

Technology (2 Booths)
Maint. Shop (1 Booth)

Paint Gun Transfer Efficiency (control for particulates) = 65% (65% typica
Booth Filter Control Efficiency (control for particulates) = 99%

Permit Analysis Total Coating Per Booth		Coating Material	Density	Solids	VOC	acetone 67-64-1	aluminum 7429-90-5	amyl acetate 628-63-7	2-butoxy ethanol 111-76-2	2-butoxy ethyl acetate 112-07-2	butyl acetate 123-86-4	n-butyl alcohol 71-36-3	carbon black 1333-86-4	calcium carbonate
gal/day	gal/yr		lb/gal	Weight Percent										
5	1000	BASF DC5300	8.21	56%	44%	5%					10%			
		BASF DC5600	8.21	56%	44%	20%								
		BASF DP26	11.57	59%	41%	5%					20%		5%	
		PPG DCU2002	7.96	49%	51%									
		PPG DCU2082	7.89	47%	53%	5%								
		PPG DP40LF RTS	11.55	64%	36%				5%				1%	
		PPG DPX171	9.21	42%	58%							20%	1%	
		PPG DPX172	7.00	3%	97%							20%		
		PPG K38	12.46	88%	32%						10%			20%
		PPG K93	12.48	66%	34%						10%			
		R-M BC Base/Color	9.47	47%	82%		10%				50%	5%	3%	
		R-M DE17 Primer	9.36	44%	56%						10%	10%		
		R-M DP20 Prime	12.99	71%	29%						15%			
		R-M EP589 Primer	11.46	61%	39%									
		R-M Activator	7.53	35%	65%									
5	500	Columbia WB Bases	10.43	31%	69%									4%
		Columbia Traffic Paint	13.90	63%	37%									61%
		S.Wms K#-Thinner	6.67	0%	100%	21%				1%				
		S.Wms T67F6 Sealer	7.42	15%	85%	50%					7%	1%		
		S.W. T77F56 Lacquer	7.84	25%	75%	7%		5%			31%	4%		

Component Characteristic	If volatile, enter "1" ==>			1	1		1	1	1	1	1		
Hourly Spray Calculations (lb/hr based on 24-hr averaging period)		lb/gal	Pounds per Hour										
	BASF DC5300	8.21	0.96	0.75	0.09	0.00	0.00	0.00	0.00	0.17	0.00	0.00	0.00
	BASF DC5600	8.21	0.96	0.75	0.34	0.00	0.00	0.00	0.00	0.00	0.00	0.00	0.00
	BASF DP26	11.57	1.43	0.98	0.12	0.00	0.00	0.00	0.00	0.48	0.00	0.12	0.00
	PPG DCU2002	7.96	0.81	0.85	0.00	0.00	0.00	0.00	0.00	0.00	0.00	0.00	0.00
	PPG DCU2082	7.89	0.77	0.87	0.08	0.00	0.00	0.00	0.00	0.00	0.00	0.00	0.00
	PPG DP40LF RTS	11.55	1.54	0.87	0.00	0.00	0.00	0.12	0.00	0.00	0.00	0.02	0.00
	PPG DPX171	9.21	0.81	1.11	0.00	0.00	0.00	0.00	0.00	0.00	0.38	0.02	0.00
	PPG DPX172	7.00	0.04	1.41	0.00	0.00	0.00	0.00	0.00	0.00	0.29	0.00	0.00
	PPG K38	12.46	1.77	0.83	0.00	0.00	0.00	0.00	0.00	0.26	0.00	0.00	0.52
	PPG K93	12.48	1.72	0.88	0.00	0.00	0.00	0.00	0.00	0.26	0.00	0.00	0.00
	R-M BC Base/Color	9.47	0.93	1.62	0.00	0.20	0.00	0.00	0.00	0.99	0.10	0.08	0.00
	R-M DE17 Primer	9.36	0.86	1.09	0.00	0.00	0.00	0.00	0.00	0.20	0.20	0.00	0.00
	R-M DP20 Prime	12.99	1.92	0.78	0.00	0.00	0.00	0.00	0.00	0.41	0.00	0.00	0.00
	R-M EP589 Primer	11.46	1.46	0.93	0.00	0.00	0.00	0.00	0.00	0.00	0.00	0.00	0.00
	R-M Activator	7.53	0.55	1.02	0.00	0.00	0.00	0.00	0.00	0.00	0.00	0.00	0.00
	Auto Booth Spray Max		**1.921**	**1.618**	**0.342**	**0.197**	**0.000**	**0.120**	**0.000**	**0.986**	**0.384**	**0.121**	**0.519**
	Columbia WB Bases	10.43	0.67	1.50	0.00	0.00	0.00	0.00	0.00	0.00	0.00	0.00	0.09
	Columbia Traffic Paint	13.90	1.82	1.07	0.00	0.00	0.00	0.00	0.00	0.00	0.00	0.00	1.77
	S.Wms K#-Thinner	6.67	0.00	1.39	0.29	0.00	0.00	0.00	0.01	0.00	0.00	0.00	0.00
	S.Wms T67F6 Sealer	7.42	0.23	1.31	0.77	0.00	0.00	0.00	0.00	0.11	0.02	0.00	0.00
	S.W. T77F56 Lacquer	7.84	0.41	1.22	0.11	0.00	0.08	0.00	0.00	0.51	0.07	0.00	0.00
	Shop Booth Spray Max		**1.824**	**1.499**	**0.773**	**0.000**	**0.082**	**0.000**	**0.014**	**0.506**	**0.065**	**0.000**	**1.766**

Annual Spray Calculations (tons/yr)		lb/gal	Tons per Year										
	BASF DC5300	8.21	2.30	1.81	0.21	0.00	0.00	0.00	0.00	0.41	0.00	0.00	0.00
	BASF DC5600	8.21	2.30	1.81	0.82	0.00	0.00	0.00	0.00	0.00	0.00	0.00	0.00
	BASF DP26	11.57	3.42	2.36	0.29	0.00	0.00	0.00	0.00	1.16	0.00	0.29	0.00
	PPG DCU2002	7.96	1.95	2.03	0.00	0.00	0.00	0.00	0.00	0.00	0.00	0.00	0.00
	PPG DCU2082	7.89	1.85	2.09	0.20	0.00	0.00	0.00	0.00	0.00	0.00	0.00	0.00
	PPG DP40LF RTS	11.55	3.70	2.08	0.00	0.00	0.00	0.29	0.00	0.00	0.00	0.06	0.00
	PPG DPX171	9.21	1.93	2.67	0.00	0.00	0.00	0.00	0.00	0.00	0.92	0.05	0.00
	PPG DPX172	7.00	0.10	3.39	0.00	0.00	0.00	0.00	0.00	0.00	0.70	0.00	0.00
	PPG K38	12.46	4.24	1.99	0.00	0.00	0.00	0.00	0.00	0.62	0.00	0.00	1.25
	PPG K93	12.48	4.12	2.12	0.00	0.00	0.00	0.00	0.00	0.62	0.00	0.00	0.00
	R-M BC Base/Color	9.47	2.24	3.88	0.00	0.47	0.00	0.00	0.00	2.37	0.24	0.14	0.00
	R-M DE17 Primer	9.36	2.06	2.62	0.00	0.00	0.00	0.00	0.00	0.47	0.47	0.00	0.00
	R-M DP20 Prime	12.99	4.61	1.88	0.00	0.00	0.00	0.00	0.00	0.97	0.00	0.00	0.00
	R-M EP589 Primer	11.46	3.50	2.23	0.00	0.00	0.00	0.00	0.00	0.00	0.00	0.00	0.00
	R-M Activator	7.53	1.32	2.45	0.00	0.00	0.00	0.00	0.00	0.00	0.00	0.00	0.00
	Auto Booth Spray Max		**4.611**	**3.883**	**0.821**	**0.474**	**0.000**	**0.289**	**0.000**	**2.368**	**0.921**	**0.289**	**1.246**
	Columbia WB Bases	10.43	0.81	1.80	0.00	0.00	0.00	0.00	0.00	0.00	0.00	0.00	0.10
	Columbia Traffic Paint	13.90	2.19	1.29	0.00	0.00	0.00	0.00	0.00	0.00	0.00	0.00	2.12
	S.Wms K#-Thinner	6.67	0.00	1.67	0.35	0.00	0.00	0.00	0.02	0.00	0.00	0.00	0.00
	S.Wms T67F6 Sealer	7.42	0.28	1.58	0.93	0.00	0.00	0.00	0.00	0.13	0.02	0.00	0.00
	S.W. T77F56 Lacquer	7.84	0.49	1.47	0.14	0.00	0.10	0.00	0.00	0.61	0.08	0.00	0.00
	Shop Booth Spray Max		**2.19**	**1.80**	**0.93**	**0.00**	**0.10**	**0.00**	**0.02**	**0.61**	**0.08**	**0.00**	**2.12**

Criteria & Toxic Air Pollutant (TAP) Emissions Analysis	Pollutant		$PM_{2.5}$ PM_{10}	VOC	acetone 67-64-1	aluminum 7429-90-5	amyl acetate 628-63-7	2-butoxy ethanol 111-76-2	2-butoxy ethyl acetate 112-07-2	butyl acetate 123-86-4	n-butyl alcohol 71-36-3	carbon black 1333-86-4	calcium carbonate
	TAP Screening Emission Level (lb/hr)		–	–	119	0.667	35.3	8	8.33	47.3	10	0.23	0.667
	Cont. Emissions Rate per Auto Booth (lb/hr)		0.0067	1.62	0.34	0.001	0.000	0.120	0.000	0.986	0.384	0.00042	0.0018
	Cont. Emissions Rate per Shop Booth (lb/hr)		0.0064	1.50	0.77	0.00	0.082	0.000	0.014	0.506	0.065	0.0000	0.0062
	Total Controlled Emissions Rate (lb/hr)		0.020	4.73	1.5	0.001	0.082	0.241	0.014	2.479	0.833	0.00084	0.0098
	% of EL				1.2%	0.2%	0.2%	3.0%	0.2%	5.2%	8.3%	0.4%	1.5%
Criteria & Hazardous Air Pollutant (HAP) Emissions Analysis	Pollutant		$PM_{2.5}$ PM_{10}	VOC									
	Controlled Emissions Rate (tons/yr)		0.040	9.6									

Table 4-1: Paint Booths Emissions Analysis

Technology (2 Booths) I for HVLP)
Maint. Shop (1 Booth)

Permit Analysis Total Coating Per Booth		Coating Material	chromium cmpds 7440-47-3	copper 7440-50-8	ethyl acetate 141 78-6	ethyl alcohol 64-17-5	ethyl benzene 100-41-4	ethylene glycol 107-21-1	fluorides	formaldehyde 50 00-0	glycol ethers 112-34-5	isobutyl alcohol 78-83-1	isopropyl alcohol 67-63-0
gal/day	gal/yr		Weight Percent										
5	1000	BASF DC5300											
		BASF DC5600					5%						
		BASF DP26					5%						
		PPG DCU2002					1%						
		PPG DCU2082											
		PPG DP40LF RTS					1%						
		PPG DPX171			5%	20%							10%
		PPG DPX172			5%	30%							
		PPG K38					5%						
		PPG K93					5%						
		R-M BC Base/Color		10%			10%		5%				10%
		R-M DE17 Primer					5%					10%	
		R-M DP20 Prime					5%						
		R-M EP589 Primer	10%				5%						
		R-M Activator					20%						
5	500	Columbia WB Bases						4%			2%		
		Columbia Traffic Paint											
		S.Wlms K#-Thinner					0.9%						10%
		S.Wlms T67F6 Sealer				4%						1%	4%
		S.W. T77F56 Lacquer				7%				0.1%		8%	4%
Component Characteristic		If volatile, enter "1"			1	1	1	1		1	1	1	1
Hourly Spray Calculations (lb/hr based on 24-hr averaging period)			Pounds per Hour										
		BASF DC5300	0.00	0.00	0.00	0.00	0.00	0.00	0.00	0.00	0.00	0.00	0.00
		BASF DC5600	0.00	0.00	0.00	0.00	0.09	0.00	0.00	0.00	0.00	0.00	0.00
		BASF DP26	0.00	0.00	0.00	0.00	0.12	0.00	0.00	0.00	0.00	0.00	0.00
		PPG DCU2002	0.00	0.00	0.00	0.00	0.02	0.00	0.00	0.00	0.00	0.00	0.00
		PPG DCU2082	0.00	0.00	0.00	0.00	0.00	0.00	0.00	0.00	0.00	0.00	0.00
		PPG DP40LF RTS	0.00	0.00	0.00	0.00	0.02	0.00	0.00	0.00	0.00	0.00	0.00
		PPG DPX171	0.00	0.00	0.10	0.38	0.00	0.00	0.00	0.00	0.00	0.00	0.19
		PPG DPX172	0.00	0.00	0.07	0.44	0.00	0.00	0.00	0.00	0.00	0.00	0.00
		PPG K38	0.00	0.00	0.00	0.00	0.13	0.00	0.00	0.00	0.00	0.00	0.00
		PPG K93	0.00	0.00	0.00	0.00	0.13	0.00	0.00	0.00	0.00	0.00	0.00
		R-M BC Base/Color	0.00	0.20	0.00	0.00	0.20	0.00	0.10	0.00	0.00	0.00	0.20
		R-M DE17 Primer	0.00	0.00	0.00	0.00	0.10	0.00	0.00	0.00	0.00	0.20	0.00
		R-M DP20 Prime	0.00	0.00	0.00	0.00	0.14	0.00	0.00	0.00	0.00	0.00	0.00
		R-M EP589 Primer	0.24	0.00	0.00	0.00	0.12	0.00	0.00	0.00	0.00	0.00	0.00
		R-M Activator	0.00	0.00	0.00	0.00	0.31	0.00	0.00	0.00	0.00	0.00	0.00
		Auto Booth Spray Max	0.239	0.197	0.096	0.437	0.314	0.000	0.099	0.000	0.000	0.195	0.197
		Columbia WB Bases	0.00	0.00	0.00	0.00	0.00	0.09	0.00	0.00	0.04	0.00	0.00
		Columbia Traffic Paint	0.00	0.00	0.00	0.00	0.00	0.00	0.00	0.00	0.00	0.00	0.00
		S.Wlms K#-Thinner	0.00	0.00	0.00	0.00	0.01	0.00	0.00	0.00	0.00	0.00	0.14
		S.Wlms T67F6 Sealer	0.00	0.00	0.00	0.06	0.00	0.00	0.00	0.00	0.00	0.02	0.06
		S.W. T77F56 Lacquer	0.00	0.00	0.00	0.11	0.00	0.00	0.00	0.00	0.00	0.13	0.07
		Shop Booth Spray Max	0.000	0.000	0.000	0.114	0.013	0.087	0.000	0.002	0.043	0.131	0.139
Annual Spray Calculations (tons/yr)			Tons per Year										
		BASF DC5300	0.00	0.00	0.00	0.00	0.00	0.00	0.00	0.00	0.00	0.00	0.00
		BASF DC5600	0.00	0.00	0.00	0.00	0.21	0.00	0.00	0.00	0.00	0.00	0.00
		BASF DP26	0.00	0.00	0.00	0.00	0.29	0.00	0.00	0.00	0.00	0.00	0.00
		PPG DCU2002	0.00	0.00	0.00	0.00	0.04	0.00	0.00	0.00	0.00	0.00	0.00
		PPG DCU2082	0.00	0.00	0.00	0.00	0.00	0.00	0.00	0.00	0.00	0.00	0.00
		PPG DP40LF RTS	0.00	0.00	0.00	0.00	0.06	0.00	0.00	0.00	0.00	0.00	0.00
		PPG DPX171	0.00	0.00	0.23	0.92	0.00	0.00	0.00	0.00	0.00	0.00	0.46
		PPG DPX172	0.00	0.00	0.17	1.05	0.00	0.00	0.00	0.00	0.00	0.00	0.00
		PPG K38	0.00	0.00	0.00	0.00	0.31	0.00	0.00	0.00	0.00	0.00	0.00
		PPG K93	0.00	0.00	0.00	0.00	0.31	0.00	0.00	0.00	0.00	0.00	0.00
		R-M BC Base/Color	0.00	0.47	0.00	0.00	0.47	0.00	0.24	0.00	0.00	0.00	0.47
		R-M DE17 Primer	0.00	0.00	0.00	0.00	0.23	0.00	0.00	0.00	0.00	0.47	0.00
		R-M DP20 Prime	0.00	0.00	0.00	0.00	0.32	0.00	0.00	0.00	0.00	0.00	0.00
		R-M EP589 Primer	0.57	0.00	0.00	0.00	0.29	0.00	0.00	0.00	0.00	0.00	0.00
		R-M Activator	0.00	0.00	0.00	0.00	0.75	0.00	0.00	0.00	0.00	0.00	0.00
		Auto Booth Spray Max	0.573	0.474	0.230	1.050	0.753	0.000	0.237	0.00	0.0000	0.466	0.474
		Columbia WB Bases	0.00	0.00	0.00	0.00	0.00	0.10	0.00	0.0000	0.05	0.00	0.00
		Columbia Traffic Paint	0.00	0.00	0.00	0.00	0.00	0.00	0.00	0.0000	0.00	0.00	0.00
		S.Wlms K#-Thinner	0.00	0.00	0.00	0.00	0.02	0.00	0.00	0.0000	0.00	0.00	0.17
		S.Wlms T67F6 Sealer	0.00	0.00	0.00	0.07	0.00	0.00	0.00	0.0000	0.00	0.02	0.07
		S.W. T77F56 Lacquer	0.00	0.00	0.00	0.14	0.00	0.00	0.00	0.0020	0.00	0.16	0.08
		Shop Booth Spray Max	0.00	0.00	0.00	0.14	0.02	0.10	0.00	0.0020	0.05	0.16	0.17

	Pollutant	chromium cmpds 7440-47-3	copper 7440-50-8	ethyl acetate 141 78-6	ethyl alcohol 64-17-5	ethyl benzene 100-41-4	ethylene glycol 107-21-1	fluorides	formaldehyde 50 00-0 (annual avg)	glycol ethers 112-34-5	isobutyl alcohol 78-83-1	isopropyl alcohol 67-63-0
Criteria & Toxic Air Pollutant (TAP) Emissions Analysis	TAP Screening Emission Level (lb/hr)	0.033	0.067	93.3	125	29	0.846	0.167	5.1E-04	–	10	65.3
	Cont. Emissions Rate per Auto Booth (lb/hr)	0.00084	0.0007	0.10	0.437	0.314	0.000	0.00035	0.0E+00	0.000	0.20	0.20
	Cont. Emissions Rate per Shop Booth (lb/hr)	0.00000	0.0000	0.000	0.114	0.013	0.087	0.00000	4.5E-04	0.043	0.13	0.14
	Total Controlled Emissions Rate (lb/hr)	0.0017	0.0014	0.19	0.99	0.64	0.087	0.0007	4.5E-04	0.043	0.52	0.53
	% of EL	5.1%	2.1%	0.2%	0.8%	2.2%	10%	0.4%	88%	–	5.2%	0.8%
Criteria & Hazardous Air Pollutant (HAP) Emissions Analysis	Pollutant	chromium cmpds 7440-47-3							formaldehyde 50 00-0	glycol ethers 112-34-5		
	Controlled Emissions Rate (tons/yr)	0.0040							0.0020	0.052		

Table 4-1: Paint Booths Emissions Analysis

Technology (2 Booths)
Maint. Shop (1 Booth)

Permit Analysis Total Coating Per Booth		Coating Material	kaolin 1332-58-7	methanol 67-56-1	1-methoxy 2-propyl acetate 108-65-6	methyl acetate 79-20-9	methyl n-amyl ketone 110-43-0	methyl propyl ketone 107-87-9	MIBK 108-10-1	mica 12002-26-2	naphthalene 91-20-3	phosphoric acid 7664-38-2	propyl alcohol 71-23-8
gal/day	gal/yr		Weight Percent										
5	1000	BASF DC5300									5%		
		BASF DC5600				10%	30%	10%	5%				
		BASF DP26	15%		5%		5%						
		PPG DCU2002					20%						
		PPG DCU2082					20%		20%				
		PPG DP40LF RTS					20%		10%				
		PPG DPX171											
		PPG DPX172							30%			5%	
		PPG K38					5%						
		PPG K93			5%		5%						
		R-M BC Base/Color			3%				50%	10%			
		R-M DE17 Primer											30%
		R-M DP20 Prime	20%		5%								
		R-M EP589 Primer											
		R-M Activator											
5	500	Columbia WB Bases	4%										
		Columbia Traffic Paint		2%									
		S.Wims K#-Thinner		4%									
		S.Wims T67F6 Sealer					9%						
		S.W. T77F56 Lacquer											

Component Characteristic	If volatile, enter "1"		1	1	1	1	1	1		1		1
Hourly Spray Calculations (lb/hr based on 24-hr averaging period)		Pounds per Hour										
	BASF DC5300	0.00	0.00	0.00	0.00	0.00	0.00	0.00	0.00	0.09	0.00	0.00
	BASF DC5600	0.00	0.00	0.00	0.17	0.51	0.17	0.09	0.00	0.00	0.00	0.00
	BASF DP26	0.36	0.00	0.12	0.00	0.12	0.00	0.00	0.00	0.00	0.00	0.00
	PPG DCU2002	0.00	0.00	0.00	0.00	0.33	0.00	0.00	0.00	0.00	0.00	0.00
	PPG DCU2082	0.00	0.00	0.00	0.00	0.33	0.00	0.33	0.00	0.00	0.00	0.00
	PPG DP40LF RTS	0.00	0.00	0.00	0.00	0.48	0.00	0.24	0.00	0.00	0.00	0.00
	PPG DPX171	0.00	0.00	0.00	0.00	0.00	0.00	0.00	0.00	0.00	0.00	0.00
	PPG DPX172	0.00	0.00	0.00	0.00	0.00	0.00	0.44	0.00	0.00	0.07	0.00
	PPG K38	0.00	0.00	0.00	0.00	0.13	0.00	0.00	0.00	0.00	0.00	0.00
	PPG K93	0.00	0.00	0.13	0.00	0.13	0.00	0.00	0.00	0.00	0.00	0.00
	R-M BC Base/Color	0.00	0.00	0.06	0.00	0.00	0.00	0.99	0.20	0.00	0.00	0.00
	R-M DE17 Primer	0.00	0.00	0.00	0.00	0.00	0.00	0.00	0.00	0.00	0.00	0.59
	R-M DP20 Prime	0.54	0.00	0.14	0.00	0.00	0.00	0.00	0.00	0.00	0.00	0.00
	R-M EP589 Primer	0.00	0.00	0.00	0.00	0.00	0.00	0.00	0.00	0.00	0.00	0.00
	R-M Activator	0.00	0.00	0.00	0.00	0.00	0.00	0.00	0.00	0.00	0.00	0.00
	Auto Booth Spray Max	**0.541**	**0.000**	**0.135**	**0.171**	**0.513**	**0.171**	**0.986**	**0.197**	**0.086**	**0.073**	**0.585**
	Columbia WB Bases	0.09	0.00	0.00	0.00	0.00	0.00	0.00	0.00	0.00	0.00	0.00
	Columbia Traffic Paint	0.00	0.06	0.00	0.00	0.00	0.00	0.00	0.00	0.00	0.00	0.00
	S.Wims K#-Thinner	0.00	0.08	0.00	0.00	0.00	0.00	0.00	0.00	0.00	0.00	0.00
	S.Wims T67F6 Sealer	0.00	0.00	0.00	0.00	0.14	0.00	0.00	0.00	0.00	0.00	0.00
	S.W. T77F56 Lacquer	0.00	0.00	0.00	0.00	0.00	0.00	0.00	0.00	0.00	0.00	0.00
	Shop Booth Spray Max	**0.087**	**0.058**	**0.000**	**0.000**	**0.139**	**0.000**	**0.000**	**0.000**	**0.000**	**0.000**	**0.000**

Annual Spray Calculations (tons/yr)		Tons per Year										
	BASF DC5300	0.00	0.00	0.00	0.00	0.00	0.00	0.00	0.00	0.21	0.00	0.00
	BASF DC5600	0.00	0.00	0.00	0.41	1.23	0.41	0.21	0.00	0.00	0.00	0.00
	BASF DP26	0.87	0.00	0.29	0.00	0.29	0.00	0.00	0.00	0.00	0.00	0.00
	PPG DCU2002	0.00	0.00	0.00	0.00	0.80	0.00	0.00	0.00	0.00	0.00	0.00
	PPG DCU2082	0.00	0.00	0.00	0.00	0.79	0.00	0.79	0.00	0.00	0.00	0.00
	PPG DP40LF RTS	0.00	0.00	0.00	0.00	1.16	0.00	0.58	0.00	0.00	0.00	0.00
	PPG DPX171	0.00	0.00	0.00	0.00	0.00	0.00	0.00	0.00	0.00	0.00	0.00
	PPG DPX172	0.00	0.00	0.00	0.00	0.00	0.00	1.05	0.00	0.00	0.17	0.00
	PPG K38	0.00	0.00	0.00	0.00	0.31	0.00	0.00	0.00	0.00	0.00	0.00
	PPG K93	0.00	0.00	0.31	0.00	0.31	0.00	0.00	0.00	0.00	0.00	0.00
	R-M BC Base/Color	0.00	0.00	0.14	0.00	0.00	0.00	2.37	0.47	0.00	0.00	0.00
	R-M DE17 Primer	0.00	0.00	0.00	0.00	0.00	0.00	0.00	0.00	0.00	0.00	1.40
	R-M DP20 Prime	1.30	0.00	0.32	0.00	0.00	0.00	0.00	0.00	0.00	0.00	0.00
	R-M EP589 Primer	0.00	0.00	0.00	0.00	0.00	0.00	0.00	0.00	0.00	0.00	0.00
	R-M Activator	0.00	0.00	0.00	0.00	0.00	0.00	0.00	0.00	0.00	0.00	0.00
	Auto Booth Spray Max	**1.299**	**0.000**	**0.325**	**0.411**	**1.232**	**0.411**	**2.363**	**0.474**	**0.205**	**0.175**	**1.404**
	Columbia WB Bases	0.10	0.00	0.00	0.00	0.00	0.00	0.00	0.00	0.00	0.00	0.00
	Columbia Traffic Paint	0.00	0.07	0.00	0.00	0.00	0.00	0.00	0.00	0.00	0.00	0.00
	S.Wims K#-Thinner	0.00	0.07	0.00	0.00	0.00	0.00	0.00	0.00	0.00	0.00	0.00
	S.Wims T67F6 Sealer	0.00	0.00	0.00	0.00	0.17	0.00	0.00	0.00	0.00	0.00	0.00
	S.W. T77F56 Lacquer	0.00	0.00	0.00	0.00	0.00	0.00	0.00	0.00	0.00	0.00	0.00
	Shop Booth Spray Max	**0.10**	**0.07**	**0.00**	**0.00**	**0.17**	**0.00**	**0.00**	**0.00**	**0.00**	**0.00**	**0.00**

	Pollutant	kaolin 1332-58-7	methanol 67-56-1	1-methoxy 2-propyl acetate 108-65-6	methyl acetate 79-20-9	methyl n-amyl ketone 110-43-0	methyl propyl ketone 107-87-9	MIBK 108-10-1	mica 12002-26-2	naphthalene 91-20-3	phosphoric acid 7664-38-2	propyl alcohol 71-23-8
Criteria & Toxic Air Pollutant (TAP) Emissions Analysis	TAP Screening Emission Level (lb/hr)	0.133	17.3	24	40.7	15.7	46.7	13.7	0.2	3.33	0.067	33.3
	Cont. Emissions Rate per Auto Booth (lb/hr)	0.0019	0.000	0.135	0.171	0.51	0.171	0.99	0.0007	0.0855	0.00026	0.585
	Cont. Emissions Rate per Shop Booth (lb/hr)	0.0003	0.058	0.000	0.000	0.14	0.000	0.000	0.0000	0.0000	0.0000	0.000
	Total Controlled Emissions Rate (lb/hr)	**0.0041**	**0.058**	**0.271**	**0.342**	**1.2**	**0.342**	**2.0**	**0.0014**	**0.17**	**0.0005**	**1.17**
	% of EL	3.1%	0.3%	1.1%	0.8%	7.4%	0.7%	14%	0.7%	5%	0.8%	3.5%
Criteria & Hazardous Air Pollutant (HAP) Emissions Analysis	Pollutant							MIBK 108-10-1		naphthalene 91-20-3		
	Controlled Emissions Rate (tons/yr)							4.74		0.41		

Table 4-1: Paint Booths Emissions Analysis

Technology (2 Booths)
Maint. Shop (1 Booth)

Permit Analysis Total Coating Per Booth		Coating Material	silica - amorphous 61790-53-2 112926-00-8	silica - crystalline 14808-60-7 60676-86-0	stoddard solvent 8052-41-3	styrene 100-42-5	toluene 108-88-3	trimethyl benzene 95-63-6 25551-13-7	VM&P naphtha 8032-32-4 64742-#	xylene 1330-20-7	zinc 7440-66-6	Total HAPS
gal/day	gal/yr		Weight Percent									
5	1000	BASF DC5300						10%	25%			0%
		BASF DC5600			0%				15%	5%		10%
		BASF DP26	5%	5%				5%		10%		10%
		PPG DCU2002				1%				40%		41%
		PPG DCU2082					10%		5%	20%		50%
		PPG DP40LF RTS	5%	1%			5%	5%	5%	5%		20%
		PPG DPX171					20%					20%
		PPG DPX172					30%					60%
		PPG K38		1%			5%	5%	5%	20%		25%
		PPG K93							5%	20%		20%
		R-M BC Base/Color	13%		3%		1%	3%	8%	25%		86%
		R-M DE17 Primer								15%	15%	15%
		R-M DP20 Prime		0.1%						15%	15%	15%
		R-M EP589 Primer	25%	0.1%			1%			20%		31%
		R-M Activator								60%		60%
5	500	Columbia WB Bases										2%
		Columbia Traffic Paint										0%
		S.Wlms K#-Thinner					33%		25%	5%		38%
		S.Wlms T67F6 Sealer	1%									0%
		S.W. T77F56 Lacquer										0%

Component Characteristic	If volatile, enter "1"			1	1	1	1	1	1	
Hourly Spray Calculations (lb/hr based on 24-hr averaging period)		Pounds per Hour								
	BASF DC5300	0.00	0.00	0.00	0.00	0.00	0.17	0.43	0.00	0.00
	BASF DC5600	0.00	0.00	0.00	0.00	0.00	0.00	0.26	0.09	0.00
	BASF DP26	0.12	0.12	0.00	0.00	0.00	0.12	0.00	0.24	0.00
	PPG DCU2002	0.00	0.00	0.00	0.02	0.00	0.00	0.00	0.66	0.00
	PPG DCU2082	0.00	0.00	0.00	0.00	0.16	0.00	0.08	0.33	0.00
	PPG DP40LF RTS	0.12	0.02	0.00	0.00	0.12	0.12	0.12	0.12	0.00
	PPG DPX171	0.00	0.00	0.00	0.00	0.38	0.00	0.00	0.00	0.00
	PPG DPX172	0.00	0.00	0.00	0.00	0.44	0.00	0.00	0.00	0.00
	PPG K38	0.00	0.03	0.00	0.00	0.13	0.13	0.13	0.52	0.00
	PPG K93	0.00	0.00	0.00	0.00	0.00	0.00	0.13	0.52	0.00
	R-M BC Base/Color	0.26	0.00	0.06	0.00	0.02	0.06	0.16	0.49	0.00
	R-M DE17 Primer	0.00	0.00	0.00	0.00	0.00	0.00	0.00	0.29	0.29
	R-M DP20 Prime	0.00	0.00	0.00	0.00	0.00	0.00	0.00	0.41	0.41
	R-M EP589 Primer	0.60	0.00	0.00	0.00	0.02	0.00	0.00	0.48	0.00
	R-M Activator	0.00	0.00	0.00	0.00	0.00	0.00	0.00	0.94	0.00
	Auto Booth Spray Max	**0.597**	**0.121**	**0.059**	**0.017**	**0.437**	**0.171**	**0.428**	**0.941**	**0.406**
	Columbia WB Bases	0.00	0.00	0.00	0.00	0.00	0.00	0.00	0.00	0.00
	Columbia Traffic Paint	0.00	0.00	0.00	0.00	0.00	0.00	0.00	0.00	0.00
	S.Wlms K#-Thinner	0.00	0.00	0.00	0.00	0.46	0.00	0.35	0.07	0.00
	S.Wlms T67F6 Sealer	0.02	0.00	0.00	0.00	0.00	0.00	0.00	0.00	0.00
	S.W. T77F56 Lacquer	0.00	0.00	0.00	0.00	0.00	0.00	0.00	0.00	0.00
	Shop Booth Spray Max	**0.015**	**0.000**	**0.000**	**0.000**	**0.459**	**0.000**	**0.348**	**0.070**	**0.000**

Annual Spray Calculations (tons/yr)		Tons per Year									
	BASF DC5300	0.00	0.00	0.00	0.00	0.00	0.41	1.03	0.00	0.00	0.00
	BASF DC5600	0.00	0.00	0.00	0.00	0.00	0.00	0.62	0.21	0.00	0.41
	BASF DP26	0.29	0.29	0.00	0.00	0.00	0.29	0.00	0.58	0.00	0.58
	PPG DCU2002	0.00	0.00	0.00	0.04	0.00	0.00	0.00	1.59	0.00	1.63
	PPG DCU2082	0.00	0.00	0.00	0.00	0.39	0.00	0.20	0.79	0.00	1.97
	PPG DP40LF RTS	0.29	0.06	0.00	0.00	0.29	0.29	0.29	0.29	0.00	1.16
	PPG DPX171	0.00	0.00	0.00	0.00	0.92	0.00	0.00	0.00	0.00	0.92
	PPG DPX172	0.00	0.00	0.00	0.00	1.05	0.00	0.00	0.00	0.00	2.10
	PPG K38	0.00	0.06	0.00	0.00	0.31	0.31	0.31	1.25	0.00	1.56
	PPG K93	0.00	0.00	0.00	0.00	0.00	0.00	0.31	1.25	0.00	1.25
	R-M BC Base/Color	0.62	0.00	0.14	0.00	0.05	0.14	0.38	1.18	0.00	4.07
	R-M DE17 Primer	0.00	0.00	0.00	0.00	0.00	0.00	0.00	0.70	0.70	0.70
	R-M DP20 Prime	0.00	0.01	0.00	0.00	0.00	0.00	0.00	0.97	0.97	0.97
	R-M EP589 Primer	1.43	0.01	0.00	0.00	0.06	0.00	0.00	1.15	0.00	1.78
	R-M Activator	0.00	0.00	0.00	0.00	0.00	0.00	0.00	2.26	0.00	2.26
	Auto Booth Spray Max	**1.433**	**0.269**	**0.142**	**0.040**	**1.050**	**0.411**	**1.026**	**2.259**	**0.974**	**4.072**
	Columbia WB Bases	0.00	0.00	0.00	0.00	0.00	0.00	0.00	0.00	0.00	0.05
	Columbia Traffic Paint	0.00	0.00	0.00	0.00	0.00	0.00	0.00	0.00	0.00	0.00
	S.Wlms K#-Thinner	0.00	0.00	0.00	0.00	0.55	0.00	0.42	0.08	0.00	0.63
	S.Wlms T67F6 Sealer	0.02	0.00	0.00	0.00	0.00	0.00	0.00	0.00	0.00	0.00
	S.W. T77F56 Lacquer	0.00	0.00	0.00	0.00	0.00	0.00	0.00	0.00	0.00	0.00
	Shop Booth Spray Max	**0.02**	**0.00**	**0.00**	**0.00**	**0.55**	**0.00**	**0.42**	**0.08**	**0.00**	**0.63**

	Pollutant	silica - amorphous 61790-53-2 112926-00-8	silica - crystalline 14808-60-7 60676-86-0	stoddard solvent 8052-41-3	styrene 100-42-5	toluene 108-88-3	trimethyl benzene 95-63-6 25551-13-7	VM&P naphtha 8032-32-4 64742-#	xylene 1330-20-7	zinc 7440-66-6
Criteria & Toxic Air Pollutant (TAP) Emissions Analysis	TAP Screening Emission Level (lb/hr)	0.667	0.0067	35	6.67	25	8.2	91.3	29	0.667
	Cont. Emissions Rate per Auto Booth (lb/hr)	0.0021	0.0004	0.059	0.017	0.44	0.171	0.43	0.941	0.0014
	Cont. Emissions Rate per Shop Booth (lb/hr)	0.0001	0.0000	0.000	0.000	0.46	0.000	0.35	0.070	0.0000
	Total Controlled Emissions Rate (lb/hr)	**0.0042**	**0.0008**	**0.12**	**0.033**	**1.3**	**0.342**	**1.2**	**2.0**	**0.0028**
	% of EL	0.6%	13%	0.3%	0.5%	5.3%	4.2%	1.3%	6.7%	0.4%

	Pollutant				styrene 100-42-5	toluene 108-88-3			xylene 1330-20-7		Total HAPs[1]
Criteria & Hazardous Air Pollutant (HAP) Emissions Analysis	Controlled Emissions Rate (tons/yr)				0.060	2.65			4.60		8.8

Note 1: Individual and Total HAPs based on single coating maximum. Therefore, individual HAP maximums (from various coatings) will not add up to Total HAPs.

5. BOILERS – FORM EU5 DOCUMENTATION

There are numerous boilers located throughout the ISU campus. From approximately October 1st through June 1st, heating and hot water is supplied by several large boilers (Boilers 1-4) located in the Heat Plant (Building 20). In the warmer months, hot water is supplied by numerous smaller boilers and hot water heaters located in the campus buildings.

5.1 Heat Plant

The four large boilers located in the Heat Plant are included in existing Permit T2-030317. The permit establishes allowable fuel types and limits annual fuel consumption. ISU is requesting fuel and use limit changes with this permit modification, as shown in Table 5-1, below.

Table 5-1: Proposed Heat Plant Boiler Operations

Unit	Existing Permit		Proposed Modification	
	Fuel	Use Limit	Fuel	Use Limit
Boiler No. 1	Natural Gas	75.4 MMscf/yr	Decommissioned	
Boiler No. 2	Coal	3854 tons coal/yr	No alternate fuel	
	Natural Gas	32.5 MMscf/yr	Natural Gas	32.5 MMscf/yr
Boiler No. 3	Natural Gas	173 MMscf/yr	Natural Gas	203 MMscf/yr
Boiler No. 4	Natural Gas	468 MMscf/yr	Natural Gas	498 MMscf/yr
	No alternate fuel		Diesel	75,000 gal/yr

Boiler No. 1, designated as a backup unit in the existing permit, has been decommissioned by ISU. Pre- and post-project emissions are calculated in Table 5-2 (attached). Boiler No. 1 is limited to 75.4 MMscf/yr of natural gas usage in the existing permit. Boiler No. 1 shared a common stack with Boiler No. 2.

Boiler No. 2 will be exclusively operated with natural gas fuel with no requested change to the annual fuel consumption limit. ISU will no longer use coal as an alternative fuel. The boiler exhaust baghouse previously used to control coal-burning particulate emissions is decommissioned. Pre- and post-project emissions are calculated in Table 5-3a for coal fuel and in Table 5-3b for natural gas fuel (attached).

Boiler No. 3 will continue to operate exclusively with natural gas. ISU respectfully requests a 30 MMscf/yr increase in the annual natural gas use limit to 203 MMscf/yr. Pre- and post-project emissions are calculated in Table 5-4 (attached).

Boiler No. 4 will continue to operate normally with natural gas. ISU respectfully requests a 30 MMscf/yr increase in the annual natural gas use limit to 498 MMscf/yr. In addition, ISU requests the option of firing Boiler No. 4 with diesel as an emergency fuel in the event that the natural gas supply to the campus is disrupted. Boiler No. 4 was purchased with the ability to burn diesel fuel. In the event of the loss of natural gas, a diesel tanker truck could be called in to park outside the Heat Plant building and supply fuel to Boiler No. 4. Fuel would be pumped at a maximum rate of 400 gallons per minute. ISU is proposing an annual diesel limit of 75,000 gallons, enough for one week of emergency operations. Pre- and post-project emissions are calculated in Table 5-5a for natural gas fuel, and in Table 5-5b for diesel fuel (attached).

5.2 Boiler 18

Boiler 18 (Building 71) is a natural gas-fired unit permitted at 1.2 MMBtu/hr in the existing permit. For the modification ISU requests replacement of the previous Weil McLain unit with a Laars unit (Model RHCH1200NACF2FXX) with the same design duty. There is no change to the emission rates from this unit.

ISU respectfully requests that the language "or equivalent" be added to the equipment list in the permit, if a detailed list of the small boilers and other fuel burning equipment is included in the modified permit. Several of the units listed are nearing the end of their operational life, and ISU would like the flexibility to replace these with units of the same or lower duty, using the same fuel.

5.3 Boiler 36

Boiler 36 is a 1.6 MMBtu/hr LARRS natural-gas fired boiler located in the Life Sciences Building (Building 65). This unit was installed as an emergency unit to provide heat to the building's plants and animals in the case of a cold weather power outage. Boiler 36 is linked to the Building 65 emergency generator, and will only come on if the emergency generator is on. Pre- and post-project emissions are calculated in Table 5-6 (attached).

5.4 Boiler 37

Boiler 37 is a new boiler proposed for the Rendezvous Complex (Building 38). Boiler 37 will be a low-Nox unit with a design duty of 2.5 MMBtu/hr. The unit is specified as a Precision FPS-58-60 equipped with a Power Flame low-NOx burner. Equipment specification sheets from Precision and Power Flame are provided in Appendix B, and include an emissions guarantee from Power Flame. Pre- and post-project emissions are calculated in Table 5-7 (attached).

Table 5-2: Boiler No. 1 (HP1) Modification Emission Analysis

Date: Feb-13

Location: Heat Plant - Building #20 Fuel: Natural Gas Equipment Capacity: 32.05 MMBtu/hr

EQUIPMENT EMISSIONS	Emission Factors from EPA AP-42, Section 1.4, Tables 1.4-1 to 1.4-4		Emission Estimates						
			Pre-Project Basis		Post-Project Basis		Changes in PTE		
			Hourly 32.05 MMBtu/hr	Annual 75.4 MMscf NG/yr	Hourly 0.00 MMBtu/hr	Annual 0.0 MMscf NG/yr	Hourly Basis	Annual Basis	
	EF	calc'd EF[1]							
Pollutant	$lb_E/10^6$ scf	lb_E/MMBtu	lb_E/hr	ton_E/yr	lb_E/hr	ton_E/yr	lb_E/hr	ton_E/yr	lb_E/hr
CO	84	0.082	2.64 E+00	3.17 E+00	0	0	-2.64E+00	-3.17E+00	-7.23E-01
NO_X	100	0.098	3.14 E+00	3.77 E+00	0	0	-3.14E+00	-3.77E+00	-8.61E-01
SO_2	0.60	0.00059	1.89 E-02	2.26 E-02	0	0	-1.89E-02	-2.26E-02	-5.16E-03
PM10	7.60	0.0075	2.39 E-01	2.87 E-01	0	0	-2.39E-01	-2.87E-01	-6.54E-02
PM2.5	7.60	0.0075	2.39 E-01	2.87 E-01	0	0	-2.39E-01	-2.87E-01	-6.54E-02
Pb	0.0005	4.90 E-07	1.57 E-05	1.89 E-05	0	0	-1.57E-05	-1.89E-05	-4.30E-06
VOC	5.50	0.005	1.73 E-01	2.07 E-01	0	0	-1.73E-01	-2.07E-01	-4.73E-02
TOC	11.00	0.011	3.46 E-01	4.15 E-01	0	0	-3.46E-01	-4.15E-01	-9.47E-02
2-Methylnaphthalene	2.4 E-05	2.35 E-08	7.54 E-07	9.05 E-07	0	0	-7.54E-07	-9.05E-07	-2.07E-07
3-Methylchloranthrene	1.8 E-06	1.76 E-09	5.66 E-08	6.79 E-08	0	0	-5.66E-08	-6.79E-08	-1.55E-08
7,12-Dimethylbenz(a)anthracite	1.6 E-05	1.57 E-08	5.03 E-07	6.03 E-07	0	0	-5.03E-07	-6.03E-07	-1.38E-07
Acenaphthene	1.8 E-06	1.76 E-09	5.66 E-08	6.79 E-08	0	0	-5.66E-08	-6.79E-08	-1.55E-08
Acenaphthylene	1.8 E-06	1.76 E-09	5.66 E-08	6.79 E-08	0	0	-5.66E-08	-6.79E-08	-1.55E-08
Anthracene	2.4 E-06	2.35 E-09	7.54 E-08	9.05 E-08	0	0	-7.54E-08	-9.05E-08	-2.07E-08
Arsenic	2.0 E-04	1.96 E-07	6.28 E-06	7.54 E-06	0	0	-6.28E-06	-7.54E-06	-1.72E-06
Barium	4.4 E-03	4.31 E-06	1.38 E-04	1.66 E-04	0	0	-1.38E-04	-1.66E-04	-3.79E-05
Benzo(a)anthracene	1.8 E-06	1.76 E-09	5.66 E-08	6.79 E-08	0	0	-5.66E-08	-6.79E-08	-1.55E-08
Benzene	2.1 E-03	2.06 E-06	6.60 E-05	7.92 E-05	0	0	-6.60E-05	-7.92E-05	-1.81E-05
Benzo(a)pyrene	1.2 E-06	1.18 E-09	3.77 E-08	4.52 E-08	0	0	-3.77E-08	-4.52E-08	-1.03E-08
Benzo(b)fluoranthene	1.8 E-06	1.76 E-09	5.66 E-08	6.79 E-08	0	0	-5.66E-08	-6.79E-08	-1.55E-08
Benzo(g,h,I)perylene	1.2 E-06	1.18 E-09	3.77 E-08	4.52 E-08	0	0	-3.77E-08	-4.52E-08	-1.03E-08
Benzo(k)fluoranthene	1.8 E-06	1.76 E-09	5.66 E-08	6.79 E-08	0	0	-5.66E-08	-6.79E-08	-1.55E-08
Beryllium	1.2 E-05	1.18 E-08	3.77 E-07	4.52 E-07	0	0	-3.77E-07	-4.52E-07	-1.03E-07
Butane	2.1 E+00	2.06 E-03	6.60 E-02	7.92 E-02	0	0	-6.60E-02	-7.92E-02	-1.81E-02
Cadmium	1.1 E-03	1.08 E-06	3.46 E-05	4.15 E-05	0	0	-3.46E-05	-4.15E-05	-9.47E-06
Chromium	1.4 E-03	1.37 E-06	4.40 E-05	5.28 E-05	0	0	-4.40E-05	-5.28E-05	-1.21E-05
Chrysene	1.8 E-06	1.76 E-09	5.66 E-08	6.79 E-08	0	0	-5.66E-08	-6.79E-08	-1.55E-08
Cobalt	8.4 E-05	8.24 E-08	2.64 E-06	3.17 E-06	0	0	-2.64E-06	-3.17E-06	-7.23E-07
Copper	8.5 E-04	8.33 E-07	2.67 E-05	3.20 E-05	0	0	-2.67E-05	-3.20E-05	-7.32E-06
Dibenzo(a,h)anthracene	1.2 E-06	1.18 E-09	3.77 E-08	4.52 E-08	0	0	-3.77E-08	-4.52E-08	-1.03E-08
Dichlorobenzene	1.2 E-03	1.18 E-06	3.77 E-05	4.52 E-05	0	0	-3.77E-05	-4.52E-05	-1.03E-05
Ethane	3.1 E+00	3.04 E-03	9.74 E-02	1.17 E-01	0	0	-9.74E-02	-1.17E-01	-2.67E-02
Fluoranthene	3.0 E-06	2.94 E-09	9.43 E-08	1.13 E-07	0	0	-9.43E-08	-1.13E-07	-2.58E-08
Fluorene	2.8 E-06	2.75 E-09	8.80 E-08	1.06 E-07	0	0	-8.80E-08	-1.06E-07	-2.41E-08
Formaldehyde	7.5 E-02	7.35 E-05	2.36 E-03	2.83 E-03	0	0	-2.36E-03	-2.83E-03	-6.46E-04
Hexane	1.8 E+00	1.76 E-03	5.66 E-02	6.79 E-02	0	0	-5.66E-02	-6.79E-02	-1.55E-02
Indeno(1,2,3-cd)pyrene	1.8 E-06	1.76 E-09	5.66 E-08	6.79 E-08	0	0	-5.66E-08	-6.79E-08	-1.55E-08
Manganese	3.8 E-04	3.73 E-07	1.19 E-05	1.43 E-05	0	0	-1.19E-05	-1.43E-05	-3.27E-06
Mercury	2.6 E-04	2.55 E-07	8.17 E-06	9.80 E-06	0	0	-8.17E-06	-9.80E-06	-2.24E-06
Methane	2.30	0.00225	7.23 E-02	8.67 E-02	0	0	-7.23E-02	-8.67E-02	-1.98E-02
Molybdenum	1.1 E-03	1.08 E-06	3.46 E-05	4.15 E-05	0	0	-3.46E-05	-4.15E-05	-9.47E-06
Naphthalene	6.1 E-04	5.98 E-07	1.92 E-05	2.30 E-05	0	0	-1.92E-05	-2.30E-05	-5.25E-06
Nickel	2.1 E-03	2.06 E-06	6.60 E-05	7.92 E-05	0	0	-6.60E-05	-7.92E-05	-1.81E-05
Pentane	2.6 E+00	2.55 E-03	8.17 E-02	9.80 E-02	0	0	-8.17E-02	-9.80E-02	-2.24E-02
Phenanathrene	1.7 E-05	1.67 E-08	5.34 E-07	6.41 E-07	0	0	-5.34E-07	-6.41E-07	-1.46E-07
Propane	1.6 E+00	1.57 E-03	5.03 E-02	6.03 E-02	0	0	-5.03E-02	-6.03E-02	-1.38E-02
Pyrene	5.0 E-06	4.90 E-09	1.57 E-07	1.89 E-07	0	0	-1.57E-07	-1.89E-07	-4.30E-08
Selenium	2.4 E-05	2.35 E-08	7.54 E-07	9.05 E-07	0	0	-7.54E-07	-9.05E-07	-2.07E-07
Toluene	3.4 E-03	3.33 E-06	1.07 E-04	1.28 E-04	0	0	-1.07E-04	-1.28E-04	-2.93E-05
Vanadium	2.3 E-03	2.25 E-06	7.23 E-05	8.67 E-05	0	0	-7.23E-05	-8.67E-05	-1.98E-05
Zinc	2.9 E-02	2.84 E-05	9.11 E-04	1.09 E-03	0	0	-9.11E-04	-1.09E-03	-2.50E-04
Polycyclic Organic Matter (POM)				4.30E-07		0		-4.30E-07	-9.81E-08
		Total HAPs =	0.061	0.073	0	0			

Notes: 1. Natural gas heating value of 1020 Btu/SCF
2. Boiler No.1 shares a stack with Boiler No.2

Table 5-3a: Boiler No. 2 (HP2) Modification Emission Analysis (Coal)

Date: Feb-13

Location: Heat Plant - Building #20 | Fuel: Coal | Equipment Capacity: 23.0 MMBtu/hr

EQUIPMENT EMISSIONS	Emission Factors from EPA AP-42, Section 1.1, Tables 1.1-3, 1.1-18, 1.1-19 and prior stack tests		Emission Estimates					
			Pre-Project Basis		Post-Project Basis		Changes in PTE	
			Hourly	Annual	Hourly	Annual	Hourly Basis	Annual Basis
			23.0	3,854	0	0		
	EF	calc'd EF	MMBtu/hr	ton_C/yr	MMBtu/hr	ton_C/yr		
Pollutant	lb_E/ton_C	lb_E/ton_C	lb_E/hr	ton_E/yr	lb_E/hr	ton_E/yr	lb_E/hr	ton_E/yr
CO	0.50	0.50	2.94 E-01	9.64 E-01	0	0	-0.29	-0.96
NO_X	---	---	3.26 E+01	5.62 E+01	0	0	-32.60	-56.20
SO_2	---	---	4.77 E+01	9.47 E+01	0	0	-47.70	-94.70
PM10	---	---	1.28 E-02	2.20 E-02	0	0	-1.28E-02	-2.20E-02
PM	---	---	2.53 E-02	4.36 E-02	0	0	-2.53E-02	-4.36E-02
Pb	4.20 E-04	4.20 E-04	2.47 E-04	8.09 E-04	0	0	-2.47E-04	-8.09E-04
CH_4	0.04	0.04	2.35 E-02	7.71 E-02	0	0	-2.35E-02	-7.71E-02
TNMOC	0.06	0.06	3.53 E-02	1.16 E-01	0	0	-3.53E-02	-1.16E-01
N_2O	0.03	0.03	1.76 E-02	5.78 E-02	0	0	-1.76E-02	-5.78E-02
HCl	1.20	1.20	7.06 E-01	2.31 E+00	0	0	-7.06E-01	-2.31E+00
HF	0.15	0.15	8.82 E-02	2.89 E-01	0	0	-8.82E-02	-2.89E-01
Antimony	1.80 E-05	1.80 E-05	1.06 E-05	3.47 E-05	0	0	-1.06E-05	-3.47E-05
Arsenic	4.10 E-04	4.10 E-04	2.41 E-04	7.90 E-04	0	0	-2.41E-04	-7.90E-04
Beryillum	2.10 E-05	2.10 E-05	1.24 E-05	4.05 E-05	0	0	-1.24E-05	-4.05E-05
Cadmium	5.10 E-05	5.10 E-05	3.00 E-05	9.83 E-05	0	0	-3.00E-05	-9.83E-05
Chromium	2.60 E-04	2.60 E-04	1.53 E-04	5.01 E-04	0	0	-1.53E-04	-5.01E-04
Chromium (VI)	7.90 E-05	7.90 E-05	4.65 E-05	1.52 E-04	0	0	-4.65E-05	-1.52E-04
Cobalt	1.00 E-04	1.00 E-04	5.88 E-05	1.93 E-04	0	0	-5.88E-05	-1.93E-04
Magnesium	1.10 E-02	1.10 E-02	6.47 E-03	2.12 E-02	0	0	-6.47E-03	-2.12E-02
Manganese	4.90 E-04	4.90 E-04	2.88 E-04	9.44 E-04	0	0	-2.88E-04	-9.44E-04
Mercury	8.30 E-05	8.30 E-05	4.88 E-05	1.60 E-04	0	0	-4.88E-05	-1.60E-04
Nickel	2.80 E-04	2.80 E-04	1.65 E-04	5.40 E-04	0	0	-1.65E-04	-5.40E-04
Selenium	1.30 E-03	1.30 E-03	7.65 E-04	2.51 E-03	0	0	-7.65E-04	-2.51E-03
			Total HAPs =	2.61	**Total HAPs =**	0		

Table 5-3b: Boiler No. 2 (HP2) Modification Emission Analysis (Natural Gas)

Date: Feb-13

Location: Heat Plant - Building #20 Fuel: Natural Gas Equipment Capacity: 23.0 MMBtu/hr

EQUIPMENT EMISSIONS	Emission Factors from EPA AP-42, Section 1.4, Tables 1.4-1 to 1.4-4		Emission Estimates						
			Pre-Project Basis		Post-Project Basis		Changes in PTE		
			Hourly[2]	Annual[3]	Hourly	Annual	Hourly Basis	Annual Basis	
			32.05	45.3	23.0	32.5			
	EF	calc'd EF[1]	MMBtu/hr	MMscf NG/yr	MMBtu/hr	MMscf NG/yr			
Pollutant	$lb_E/10^6$ scf	lb_E/MMBtu	lb_E/hr	ton_E/yr	lb_E/hr	ton_E/yr	lb_E/hr	ton_E/yr	lb_E/hr
CO	84	0.082	2.64 E+00	1.90 E+00	1.89 E+00	1.37 E+00	-7.5E-01	-5.4E-01	-1.22E-01
NO_X	100	0.098	3.14 E+00	2.26 E+00	2.25 E+00	1.63 E+00	-8.9E-01	-6.4E-01	-1.46E-01
SO_2	0.60	0.00059	1.89 E-02	1.36 E-02	1.35 E-02	9.75 E-03	-5.3E-03	-3.8E-03	-8.73E-04
PM10[4]	7.60	0.0075	2.39 E-04	1.72 E-01	1.71 E-01	1.24 E-01	1.7E-01	-4.8E-02	-1.11E-02
PM2.5	7.60	0.0075	2.39 E-04	1.72 E-01	1.71 E-01	1.24 E-01	1.7E-01	-4.8E-02	-1.11E-02
Pb	0.0005	4.90 E-07	1.57 E-05	1.13 E-05	1.13 E-05	8.13 E-06	-4.4E-06	-3.2E-06	-7.28E-07
VOC	5.50	0.005	1.73 E-01	1.24 E-01	1.24 E-01	8.94 E-02	-4.9E-02	-3.5E-02	-8.01E-03
TOC	11.00	0.011	3.46 E-01	2.49 E-01	2.48 E-01	1.79 E-01	-9.8E-02	-7.0E-02	-1.60E-02
2-Methylnaphthalene	2.4 E-05	2.35 E-08	7.54 E-07	5.43 E-07	5.41 E-07	3.90 E-07	-2.1E-07	-1.5E-07	-3.49E-08
3-Methylchloranthrene	1.8 E-06	1.76 E-09	5.66 E-08	4.07 E-08	4.06 E-08	2.93 E-08	-1.6E-08	-1.1E-08	-2.62E-09
7,12-Dimethylbenz(a)anthracite	1.6 E-05	1.57 E-08	5.03 E-07	3.62 E-07	3.61 E-07	2.60 E-07	-1.4E-07	-1.0E-07	-2.33E-08
Acenaphthene	1.8 E-06	1.76 E-09	5.66 E-08	4.07 E-08	4.06 E-08	2.93 E-08	-1.6E-08	-1.1E-08	-2.62E-09
Acenaphthylene	1.8 E-06	1.76 E-09	5.66 E-08	4.07 E-08	4.06 E-08	2.93 E-08	-1.6E-08	-1.1E-08	-2.62E-09
Anthracene	2.4 E-06	2.35 E-09	7.54 E-08	5.43 E-08	5.41 E-08	3.90 E-08	-2.1E-08	-1.5E-08	-3.49E-09
Arsenic	2.0 E-04	1.96 E-07	6.28 E-06	4.53 E-06	4.51 E-06	3.25 E-06	-1.8E-06	-1.3E-06	-2.91E-07
Barium	4.4 E-03	4.31 E-06	1.38 E-04	9.96 E-05	9.92 E-05	7.15 E-05	-3.9E-05	-2.8E-05	-6.40E-06
Benzo(a)anthracene	1.8 E-06	1.76 E-09	5.66 E-08	4.07 E-08	4.06 E-08	2.93 E-08	-1.6E-08	-1.1E-08	-2.62E-09
Benzene	2.1 E-03	2.06 E-06	6.60 E-05	4.75 E-05	4.74 E-05	3.41 E-05	-1.9E-05	-1.3E-05	-3.06E-06
Benzo(a)pyrene	1.2 E-06	1.18 E-09	3.77 E-08	2.72 E-08	2.71 E-08	1.95 E-08	-1.1E-08	-7.7E-09	-1.75E-09
Benzo(b)fluoranthene	1.8 E-06	1.76 E-09	5.66 E-08	4.07 E-08	4.06 E-08	2.93 E-08	-1.6E-08	-1.1E-08	-2.62E-09
Benzo(g,h,I)perylene	1.2 E-06	1.18 E-09	3.77 E-08	2.72 E-08	2.71 E-08	1.95 E-08	-1.1E-08	-7.7E-09	-1.75E-09
Benzo(k)fluoranthene	1.8 E-06	1.76 E-09	5.66 E-08	4.07 E-08	4.06 E-08	2.93 E-08	-1.6E-08	-1.1E-08	-2.62E-09
Beryllium	1.2 E-05	1.18 E-08	3.77 E-07	2.72 E-07	2.71 E-07	1.95 E-07	-1.1E-07	-7.7E-08	-1.75E-08
Butane	2.1 E+00	2.06 E-03	6.60 E-02	4.75 E-02	4.74 E-02	3.41 E-02	-1.9E-02	-1.3E-02	-3.06E-03
Cadmium	1.1 E-03	1.08 E-06	3.46 E-05	2.49 E-05	2.48 E-05	1.79 E-05	-9.8E-06	-7.0E-06	-1.60E-06
Chromium	1.4 E-03	1.37 E-06	4.40 E-05	3.17 E-05	3.16 E-05	2.28 E-05	-1.2E-05	-8.9E-06	-2.04E-06
Chrysene	1.8 E-06	1.76 E-09	5.66 E-08	4.07 E-08	4.06 E-08	2.93 E-08	-1.6E-08	-1.1E-08	-2.62E-09
Cobalt	8.4 E-05	8.24 E-08	2.64 E-06	1.90 E-06	1.89 E-06	1.37 E-06	-7.5E-07	-5.4E-07	-1.22E-07
Copper	8.5 E-04	8.33 E-07	2.67 E-05	1.92 E-05	1.92 E-05	1.38 E-05	-7.5E-06	-5.4E-06	-1.24E-06
Dibenzo(a,h)anthracene	1.2 E-06	1.18 E-09	3.77 E-08	2.72 E-08	2.71 E-08	1.95 E-08	-1.1E-08	-7.7E-09	-1.75E-09
Dichlorobenzene	1.2 E-03	1.18 E-06	3.77 E-05	2.72 E-05	2.71 E-05	1.95 E-05	-1.1E-05	-7.7E-06	-1.75E-06
Ethane	3.1 E+00	3.04 E-03	9.74 E-02	7.01 E-02	6.99 E-02	5.04 E-02	-2.8E-02	-2.0E-02	-4.51E-03
Fluoranthene	3.0 E-06	2.94 E-09	9.43 E-08	6.79 E-08	6.76 E-08	4.88 E-08	-2.7E-08	-1.9E-08	-4.37E-09
Fluorene	2.8 E-06	2.75 E-09	8.80 E-08	6.34 E-08	6.31 E-08	4.55 E-08	-2.5E-08	-1.8E-08	-4.08E-09
Formaldehyde	7.5 E-02	7.35 E-05	2.36 E-03	1.70 E-03	1.69 E-03	1.22 E-03	-6.7E-04	-4.8E-04	-1.09E-04
Hexane	1.8 E+00	1.76 E-03	5.66 E-02	4.07 E-02	4.06 E-02	2.93 E-02	-1.6E-02	-1.1E-02	-2.62E-03
Indeno(1,2,3-cd)pyrene	1.8 E-06	1.76 E-09	5.66 E-08	4.07 E-08	4.06 E-08	2.93 E-08	-1.6E-08	-1.1E-08	-2.62E-09
Manganese	3.8 E-04	3.73 E-07	1.19 E-05	8.60 E-06	8.57 E-06	6.18 E-06	-3.4E-06	-2.4E-06	-5.53E-07
Mercury	2.6 E-04	2.55 E-07	8.17 E-06	5.88 E-06	5.86 E-06	4.23 E-06	-2.3E-06	-1.7E-06	-3.78E-07
Methane	2.30	0.00225	7.23 E-02	5.20 E-02	5.19 E-02	3.74 E-02	-2.0E-02	-1.5E-02	-3.35E-03
Molybdenum	1.1 E-03	1.08 E-06	3.46 E-05	2.49 E-05	2.48 E-05	1.79 E-05	-9.8E-06	-7.0E-06	-1.60E-06
Naphthalene	6.1 E-04	5.98 E-07	1.92 E-05	1.38 E-05	1.38 E-05	9.91 E-06	-5.4E-06	-3.9E-06	-8.88E-07
Nickel	2.1 E-03	2.06 E-06	6.60 E-05	4.75 E-05	4.74 E-05	3.41 E-05	-1.9E-05	-1.3E-05	-3.06E-06
Pentane	2.6 E+00	2.55 E-03	8.17 E-02	5.88 E-02	5.86 E-02	4.23 E-02	-2.3E-02	-1.7E-02	-3.78E-03
Phenanathrene	1.7 E-05	1.67 E-08	5.34 E-07	3.85 E-07	3.83 E-07	2.76 E-07	-1.5E-07	-1.1E-07	-2.47E-08
Propane	1.6 E+00	1.57 E-03	5.03 E-02	3.62 E-02	3.61 E-02	2.60 E-02	-1.4E-02	-1.0E-02	-2.33E-03
Pyrene	5.0 E-06	4.90 E-09	1.57 E-07	1.13 E-07	1.13 E-07	8.13 E-08	-4.4E-08	-3.2E-08	-7.28E-09
Selenium	2.4 E-05	2.35 E-08	7.54 E-07	5.43 E-07	5.41 E-07	3.90 E-07	-2.1E-07	-1.5E-07	-3.49E-08
Toluene	3.4 E-03	3.33 E-06	1.07 E-04	7.69 E-05	7.67 E-05	5.53 E-05	-3.0E-05	-2.2E-05	-4.95E-06
Vanadium	2.3 E-03	2.25 E-06	7.23 E-05	5.20 E-05	5.19 E-05	3.74 E-05	-2.0E-05	-1.5E-05	-3.35E-06
Zinc	2.9 E-02	2.84 E-05	9.11 E-04	6.56 E-04	6.54 E-04	4.71 E-04	-2.6E-04	-1.8E-04	-4.22E-05
Polycyclic Organic Matter (POM)				2.58E-07		1.85E-07		-7.27E-08	-1.66E-08
		Total HAPs =	0.061	0.044	0.043	0.031			

Notes:
1. Natural gas heating value of 1020 Btu/SCF
2. Prior permit calculations used 32.05 MMBtu/hr duty for Boiler 2 NG emission calcs. Actual design duty is 23 MMBtu/hr.
3. Prior permit calculations used 32.05 MMBtu/hr for 1440 hrs/yr, equivalent to 45.2 MMscf NG/yr.
4. Particulate matter previously controlled to 99.9% efficiency with baghouse

Table 5-4: Boiler No. 3 (HP3) Modification Emission Analysis

Date: Feb-13

Location: Heat Plant - Building #20 Fuel: Natural Gas Equipment Capacity: 26.92 MMBtu/hr

EQUIPMENT EMISSIONS	Emission Factors from EPA AP-42, Section 1.4, Tables 1.4-1 to 1.4-4		Emission Estimates						
			Pre-Project Basis		Post-Project Basis		Changes in PTE		
			Hourly 26.92 MMBtu/hr	Annual 173 MMscf NG/yr	Hourly 26.92 MMBtu/hr	Annual 203 MMscf NG/yr	Hourly Basis	Annual Basis	
	EF	calc'd EF[1]							
Pollutant	$lb_E/10^6$ scf	lb_E/MMBtu	lb_E/hr	ton_E/yr	lb_E/hr	ton_E/yr	lb_E/hr	ton_E/yr	lb_E/hr
CO	84	0.082	2.22 E+00	7.26 E+00	2.22 E+00	8.53 E+00	0	1.26E+00	2.88E-01
NO_X[2]	50	0.049	1.32 E+00	4.32 E+00	1.32 E+00	5.08 E+00	0	7.52E-01	1.72E-01
SO_2	0.60	0.00059	1.58 E-02	5.19 E-02	1.58 E-02	6.09 E-02	0	9.02E-03	2.06E-03
PM10	7.60	0.0075	2.01 E-01	6.57 E-01	2.01 E-01	7.71 E-01	0	1.14E-01	2.61E-02
PM2.5	7.60	0.0075	2.01 E-01	6.57 E-01	2.01 E-01	7.71 E-01	0	1.14E-01	2.61E-02
Pb	0.0005	4.90 E-07	1.32 E-05	4.32 E-05	1.32 E-05	5.08 E-05	0	7.52E-06	1.72E-06
VOC	5.50	0.005	1.45 E-01	4.76 E-01	1.45 E-01	5.58 E-01	0	8.27E-02	1.89E-02
TOC	11.00	0.011	2.90 E-01	9.51 E-01	2.90 E-01	1.12 E+00	0	1.65E-01	3.77E-02
2-Methylnaphthalene	2.4 E-05	2.35 E-08	6.33 E-07	2.08 E-06	6.33 E-07	2.44 E-06	0	3.61E-07	8.24E-08
3-Methylchloranthrene	1.8 E-06	1.76 E-09	4.75 E-08	1.56 E-07	4.75 E-08	1.83 E-07	0	2.71E-08	6.18E-09
7,12-Dimethylbenz(a)anthracite	1.6 E-05	1.57 E-08	4.22 E-07	1.38 E-06	4.22 E-07	1.62 E-06	0	2.40E-07	5.49E-08
Acenaphthene	1.8 E-06	1.76 E-09	4.75 E-08	1.56 E-07	4.75 E-08	1.83 E-07	0	2.71E-08	6.18E-09
Acenaphthylene	1.8 E-06	1.76 E-09	4.75 E-08	1.56 E-07	4.75 E-08	1.83 E-07	0	2.71E-08	6.18E-09
Anthracene	2.4 E-06	2.35 E-09	6.33 E-08	2.08 E-07	6.33 E-08	2.44 E-07	0	3.61E-08	8.24E-09
Arsenic	2.0 E-04	1.96 E-07	5.28 E-06	1.73 E-05	5.28 E-06	2.03 E-05	0	3.01E-06	6.86E-07
Barium	4.4 E-03	4.31 E-06	1.16 E-04	3.80 E-04	1.16 E-04	4.47 E-04	0	6.61E-05	1.51E-05
Benzo(a)anthracene	1.8 E-06	1.76 E-09	4.75 E-08	1.56 E-07	4.75 E-08	1.83 E-07	0	2.71E-08	6.18E-09
Benzene	2.1 E-03	2.06 E-06	5.54 E-05	1.82 E-04	5.54 E-05	2.13 E-04	0	3.16E-05	7.21E-06
Benzo(a)pyrene	1.2 E-06	1.18 E-09	3.17 E-08	1.04 E-07	3.17 E-08	1.22 E-07	0	1.80E-08	4.12E-09
Benzo(b)fluoranthene	1.8 E-06	1.76 E-09	4.75 E-08	1.56 E-07	4.75 E-08	1.83 E-07	0	2.71E-08	6.18E-09
Benzo(g,h,l)perylene	1.2 E-06	1.18 E-09	3.17 E-08	1.04 E-07	3.17 E-08	1.22 E-07	0	1.80E-08	4.12E-09
Benzo(k)fluoranthene	1.8 E-06	1.76 E-09	4.75 E-08	1.56 E-07	4.75 E-08	1.83 E-07	0	2.71E-08	6.18E-09
Beryllium	1.2 E-05	1.18 E-08	3.17 E-07	1.04 E-06	3.17 E-07	1.22 E-06	0	1.80E-07	4.12E-08
Butane	2.1 E+00	2.06 E-03	5.54 E-02	1.82 E-01	5.54 E-02	2.13 E-01	0	3.16E-02	7.21E-03
Cadmium	1.1 E-03	1.08 E-06	2.90 E-05	9.51 E-05	2.90 E-05	1.12 E-04	0	1.65E-05	3.77E-06
Chromium	1.4 E-03	1.37 E-06	3.70 E-05	1.21 E-04	3.70 E-05	1.42 E-04	0	2.10E-05	4.80E-06
Chrysene	1.8 E-06	1.76 E-09	4.75 E-08	1.56 E-07	4.75 E-08	1.83 E-07	0	2.71E-08	6.18E-09
Cobalt	8.4 E-05	8.24 E-08	2.22 E-06	7.26 E-06	2.22 E-06	8.53 E-06	0	1.26E-06	2.88E-07
Copper	8.5 E-04	8.33 E-07	2.24 E-05	7.35 E-05	2.24 E-05	8.63 E-05	0	1.28E-05	2.92E-06
Dibenzo(a,h)anthracene	1.2 E-06	1.18 E-09	3.17 E-08	1.04 E-07	3.17 E-08	1.22 E-07	0	1.80E-08	4.12E-09
Dichlorobenzene	1.2 E-03	1.18 E-06	3.17 E-05	1.04 E-04	3.17 E-05	1.22 E-04	0	1.80E-05	4.12E-06
Ethane	3.1 E+00	3.04 E-03	8.18 E-02	2.68 E-01	8.18 E-02	3.15 E-01	0	4.66E-02	1.06E-02
Fluoranthene	3.0 E-06	2.94 E-09	7.92 E-08	2.59 E-07	7.92 E-08	3.05 E-07	0	4.51E-08	1.03E-08
Fluorene	2.8 E-06	2.75 E-09	7.39 E-08	2.42 E-07	7.39 E-08	2.84 E-07	0	4.21E-08	9.61E-09
Formaldehyde	7.5 E-02	7.35 E-05	1.98 E-03	6.49 E-03	1.98 E-03	7.61 E-03	0	1.13E-03	2.57E-04
Hexane	1.8 E+00	1.76 E-03	4.75 E-02	1.56 E-01	4.75 E-02	1.83 E-01	0	2.71E-02	6.18E-03
Indeno(1,2,3-cd)pyrene	1.8 E-06	1.76 E-09	4.75 E-08	1.56 E-07	4.75 E-08	1.83 E-07	0	2.71E-08	6.18E-09
Manganese	3.8 E-04	3.73 E-07	1.00 E-05	3.29 E-05	1.00 E-05	3.86 E-05	0	5.71E-06	1.30E-06
Mercury	2.6 E-04	2.55 E-07	6.86 E-06	2.25 E-05	6.86 E-06	2.64 E-05	0	3.91E-06	8.92E-07
Methane	2.30	0.00225	6.07 E-02	1.99 E-01	6.07 E-02	2.33 E-01	0	3.46E-02	7.89E-03
Molybdenum	1.1 E-03	1.08 E-06	2.90 E-05	9.51 E-05	2.90 E-05	1.12 E-04	0	1.65E-05	3.77E-06
Naphthalene	6.1 E-04	5.98 E-07	1.61 E-05	5.27 E-05	1.61 E-05	6.19 E-05	0	9.17E-06	2.09E-06
Nickel	2.1 E-03	2.06 E-06	5.54 E-05	1.82 E-04	5.54 E-05	2.13 E-04	0	3.16E-05	7.21E-06
Pentane	2.6 E+00	2.55 E-03	6.86 E-02	2.25 E-01	6.86 E-02	2.64 E-01	0	3.91E-02	8.92E-03
Phenanathrene	1.7 E-05	1.67 E-08	4.49 E-07	1.47 E-06	4.49 E-07	1.73 E-06	0	2.56E-07	5.83E-08
Propane	1.6 E+00	1.57 E-03	4.22 E-02	1.38 E-01	4.22 E-02	1.62 E-01	0	2.40E-02	5.49E-03
Pyrene	5.0 E-06	4.90 E-09	1.32 E-07	4.32 E-07	1.32 E-07	5.08 E-07	0	7.52E-08	1.72E-08
Selenium	2.4 E-05	2.35 E-08	6.33 E-07	2.08 E-06	6.33 E-07	2.44 E-06	0	3.61E-07	8.24E-08
Toluene	3.4 E-03	3.33 E-06	8.97 E-05	2.94 E-04	8.97 E-05	3.45 E-04	0	5.11E-05	1.17E-05
Vanadium	2.3 E-03	2.25 E-06	6.07 E-05	1.99 E-04	6.07 E-05	2.33 E-04	0	3.46E-05	7.89E-06
Zinc	2.9 E-02	2.84 E-05	7.65 E-04	2.51 E-03	7.65 E-04	2.94 E-03	0	4.36E-04	9.95E-05
Polycyclic Organic Matter (POM)				9.86E-07		1.16E-06		1.71E-07	3.91E-08
		Total HAPs =	0.051	0.167	0.051	0.195			

Notes: 1. Natural gas heating value of 1020 Btu/SCF
2. Emission factor for "Small Boilers", "Controlled - Low NO_X burners".

Table 5-5a: Boiler No. 4 (HP4) Modification Emission Analysis (Natural Gas)

Date: Feb-13

Location: Heat Plant - Building #20 Fuel: Natural Gas Equipment Capacity: 72.84 MMBtu/hr

EQUIPMENT EMISSIONS	Emission Factors from EPA AP-42, Section 1.4, Tables 1.4-1 to 1.4-4		Emission Estimates						
			Pre-Project Basis		Post-Project Basis		Changes in PTE		
			Hourly 72.84 MMBtu/hr	Annual 468 MMscf NG/yr	Hourly 72.84 MMBtu/hr	Annual 498 MMscf NG/yr	Hourly Basis	Annual Basis	
	EF	calc'd EF[1]							
Pollutant	$lb_E/10^6$ scf	lb_E/MMBtu	lb_E/hr	ton_E/yr	lb_E/hr	ton_E/yr	lb_E/hr	ton_E/yr	lb_E/hr
CO	84	0.082	6.00 E+00	1.97 E+01	6.00 E+00	2.09 E+01	0	1.26E+00	2.89E-01
NO_X[2]	50	0.049	3.57 E+00	1.17 E+01	3.57 E+00	1.25 E+01	0	7.53E-01	1.72E-01
SO_2	0.60	0.00059	4.28 E-02	1.40 E-01	4.28 E-02	1.49 E-01	0	9.03E-03	2.06E-03
PM10	7.60	0.0075	5.43 E-01	1.78 E+00	5.43 E-01	1.89 E+00	0	1.14E-01	2.61E-02
PM2.5	7.60	0.0075	5.43 E-01	1.78 E+00	5.43 E-01	1.89 E+00	0	1.14E-01	2.61E-02
Pb	0.0005	4.90 E-07	3.57 E-05	1.17 E-04	3.57 E-05	1.25 E-04	0	7.53E-06	1.72E-06
VOC	5.50	0.005	3.93 E-01	1.29 E+00	3.93 E-01	1.37 E+00	0	8.28E-02	1.89E-02
TOC	11.00	0.011	7.86 E-01	2.57 E+00	7.86 E-01	2.74 E+00	0	1.66E-01	3.78E-02
2-Methylnaphthalene	2.4 E-05	2.35 E-08	1.71 E-06	5.61 E-06	1.71 E-06	5.98 E-06	0	3.61E-07	8.25E-08
3-Methylchloranthrene	1.8 E-06	1.76 E-09	1.29 E-07	4.21 E-07	1.29 E-07	4.48 E-07	0	2.71E-08	6.19E-09
7,12-Dimethylbenz(a)anthracite	1.6 E-05	1.57 E-08	1.14 E-06	3.74 E-06	1.14 E-06	3.98 E-06	0	2.41E-07	5.50E-08
Acenaphthene	1.8 E-06	1.76 E-09	1.29 E-07	4.21 E-07	1.29 E-07	4.48 E-07	0	2.71E-08	6.19E-09
Acenaphthylene	1.8 E-06	1.76 E-09	1.29 E-07	4.21 E-07	1.29 E-07	4.48 E-07	0	2.71E-08	6.19E-09
Anthracene	2.4 E-06	2.35 E-09	1.71 E-07	5.61 E-07	1.71 E-07	5.98 E-07	0	3.61E-08	8.25E-09
Arsenic	2.0 E-04	1.96 E-07	1.43 E-05	4.68 E-05	1.43 E-05	4.98 E-05	0	3.01E-06	6.87E-07
Barium	4.4 E-03	4.31 E-06	3.14 E-04	1.03 E-03	3.14 E-04	1.10 E-03	0	6.62E-05	1.51E-05
Benzo(a)anthracene	1.8 E-06	1.76 E-09	1.29 E-07	4.21 E-07	1.29 E-07	4.48 E-07	0	2.71E-08	6.19E-09
Benzene	2.1 E-03	2.06 E-06	1.50 E-04	4.91 E-04	1.50 E-04	5.23 E-04	0	3.16E-05	7.22E-06
Benzo(a)pyrene	1.2 E-06	1.18 E-09	8.57 E-08	2.81 E-07	8.57 E-08	2.99 E-07	0	1.81E-08	4.12E-09
Benzo(b)fluoranthene	1.8 E-06	1.76 E-09	1.29 E-07	4.21 E-07	1.29 E-07	4.48 E-07	0	2.71E-08	6.19E-09
Benzo(g,h,I)perylene	1.2 E-06	1.18 E-09	8.57 E-08	2.81 E-07	8.57 E-08	2.99 E-07	0	1.81E-08	4.12E-09
Benzo(k)fluoranthene	1.8 E-06	1.76 E-09	1.29 E-07	4.21 E-07	1.29 E-07	4.48 E-07	0	2.71E-08	6.19E-09
Beryllium	1.2 E-05	1.18 E-08	8.57 E-07	2.81 E-06	8.57 E-07	2.99 E-06	0	1.81E-07	4.12E-08
Butane	2.1 E+00	2.06 E-03	1.50 E-01	4.91 E-01	1.50 E-01	5.23 E-01	0	3.16E-02	7.22E-03
Cadmium	1.1 E-03	1.08 E-06	7.86 E-05	2.57 E-04	7.86 E-05	2.74 E-04	0	1.66E-05	3.78E-06
Chromium	1.4 E-03	1.37 E-06	1.00 E-04	3.28 E-04	1.00 E-04	3.49 E-04	0	2.11E-05	4.81E-06
Chrysene	1.8 E-06	1.76 E-09	1.29 E-07	4.21 E-07	1.29 E-07	4.48 E-07	0	2.71E-08	6.19E-09
Cobalt	8.4 E-05	8.24 E-08	6.00 E-06	1.97 E-05	6.00 E-06	2.09 E-05	0	1.26E-06	2.89E-07
Copper	8.5 E-04	8.33 E-07	6.07 E-05	1.99 E-04	6.07 E-05	2.12 E-04	0	1.28E-05	2.92E-06
Dibenzo(a,h)anthracene	1.2 E-06	1.18 E-09	8.57 E-08	2.81 E-07	8.57 E-08	2.99 E-07	0	1.81E-08	4.12E-09
Dichlorobenzene	1.2 E-03	1.18 E-06	8.57 E-05	2.81 E-04	8.57 E-05	2.99 E-04	0	1.81E-05	4.12E-06
Ethane	3.1 E+00	3.04 E-03	2.21 E-01	7.25 E-01	2.21 E-01	7.72 E-01	0	4.67E-02	1.07E-02
Fluoranthene	3.0 E-06	2.94 E-09	2.14 E-07	7.02 E-07	2.14 E-07	7.47 E-07	0	4.52E-08	1.03E-08
Fluorene	2.8 E-06	2.75 E-09	2.00 E-07	6.55 E-07	2.00 E-07	6.97 E-07	0	4.22E-08	9.62E-09
Formaldehyde	7.5 E-02	7.35 E-05	5.36 E-03	1.75 E-02	5.36 E-03	1.87 E-02	0	1.13E-03	2.58E-04
Hexane	1.8 E+00	1.76 E-03	1.29 E-01	4.21 E-01	1.29 E-01	4.48 E-01	0	2.71E-02	6.19E-03
Indeno(1,2,3-cd)pyrene	1.8 E-06	1.76 E-09	1.29 E-07	4.21 E-07	1.29 E-07	4.48 E-07	0	2.71E-08	6.19E-09
Manganese	3.8 E-04	3.73 E-07	2.71 E-05	8.89 E-05	2.71 E-05	9.46 E-05	0	5.72E-06	1.31E-06
Mercury	2.6 E-04	2.55 E-07	1.86 E-05	6.08 E-05	1.86 E-05	6.47 E-05	0	3.91E-06	8.94E-07
Methane	2.30	0.00225	1.64 E-01	5.38 E-01	1.64 E-01	5.73 E-01	0	3.46E-02	7.91E-03
Molybdenum	1.1 E-03	1.08 E-06	7.86 E-05	2.57 E-04	7.86 E-05	2.74 E-04	0	1.66E-05	3.78E-06
Naphthalene	6.1 E-04	5.98 E-07	4.36 E-05	1.43 E-04	4.36 E-05	1.52 E-04	0	9.18E-06	2.10E-06
Nickel	2.1 E-03	2.06 E-06	1.50 E-04	4.91 E-04	1.50 E-04	5.23 E-04	0	3.16E-05	7.22E-06
Pentane	2.6 E+00	2.55 E-03	1.86 E-01	6.08 E-01	1.86 E-01	6.47 E-01	0	3.91E-02	8.94E-03
Phenanathrene	1.7 E-05	1.67 E-08	1.21 E-06	3.98 E-06	1.21 E-06	4.23 E-06	0	2.56E-07	5.84E-08
Propane	1.6 E+00	1.57 E-03	1.14 E-01	3.74 E-01	1.14 E-01	3.98 E-01	0	2.41E-02	5.50E-03
Pyrene	5.0 E-06	4.90 E-09	3.57 E-07	1.17 E-06	3.57 E-07	1.25 E-06	0	7.53E-08	1.72E-08
Selenium	2.4 E-05	2.35 E-08	1.71 E-06	5.61 E-06	1.71 E-06	5.98 E-06	0	3.61E-07	8.25E-08
Toluene	3.4 E-03	3.33 E-06	2.43 E-04	7.95 E-04	2.43 E-04	8.47 E-04	0	5.12E-05	1.17E-05
Vanadium	2.3 E-03	2.25 E-06	1.64 E-04	5.38 E-04	1.64 E-04	5.73 E-04	0	3.46E-05	7.91E-06
Zinc	2.9 E-02	2.84 E-05	2.07 E-03	6.78 E-03	2.07 E-03	7.22 E-03	0	4.37E-04	9.97E-05
Polycyclic Organic Matter (POM)				2.67E-06		2.84E-06		1.72E-07	3.92E-08
		Total HAPs =	0.138	0.450	0.138	0.479			

Notes: 1. Natural gas heating value of 1020 Btu/SCF
2. Emission factor for "Small Boilers", "Controlled - Low NO_X burners".

Table 5-5b: Boiler No. 4 (HP4) Modification Emission Analysis (Diesel)

Date: Feb-13

Location: Heat Plant - Building #20 Fuel: Diesel Equipment Capacity: 400 gal/hr

EQUIPMENT EMISSIONS	Diesel Emission Factors from EPA AP-42, Section 1.3, Tables 1.3-1 to 3, 1.3-6, 1.3-9 to 10		Emission Estimates						
			Pre-Project Basis		Post-Project Basis		Changes in PTE		
	EF	calc'd EF[1]	Hourly 72.84 MMBtu/hr	Annual	Hourly[2] 56.0 MMBtu/hr	Annual[3] 75,000 gallon/yr	Hourly Basis	Annual Basis	
Pollutant	$lb_E/10^3$ gal	lb_E/MMBtu	Nat. Gas lbE/hr	tonE/yr	lb_E/hr	ton_E/yr	lb_E/hr	ton_E/yr	lb_E/hr
CO	5	3.57E-02	6.00 E+00		2.00 E+00	1.88 E-01	-4.00E+00	1.88E-01	4.28E-02
NO_X[4]	9	6.43E-02	3.57 E+00		3.60 E+00	3.38 E-01	2.94E-02	3.38E-01	7.71E-02
SO_2	0.0022	1.54E-05	4.28 E-02		8.64 E-04	8.10 E-05	-4.20E-02	8.10E-05	1.85E-05
PM10	1.00	7.14E-03	5.43 E-01		4.00 E-01	3.75 E-02	-1.43E-01	3.75E-02	8.56E-03
PM2.5	0.25	1.79E-03	5.43 E-01		1.00 E-01	9.38 E-03	-4.43E-01	9.38E-03	2.14E-03
Pb	0.00	9.00E-06	3.57 E-05		5.04 E-04	4.73 E-05	4.68E-04	4.73E-05	1.08E-05
VOC	0.34	2.43E-03	3.93 E-01		1.36 E-01	1.28 E-02	-2.57E-01	1.28E-02	2.91E-03
TOC	0.56	3.97E-03	7.86 E-01		2.22 E-01	2.09 E-02	-5.63E-01	2.09E-02	4.76E-03
2-Methylnaphthalene			1.71 E-06		0	0	-1.71E-06	0.00E+00	0.00E+00
3-Methylchloranthrene			1.29 E-07		0	0	-1.29E-07	0.00E+00	0.00E+00
7,12-Dimethylbenz(a)anthracite			1.14 E-06		0	0	-1.14E-06	0.00E+00	0.00E+00
Acenaphthene	2.11E-05	1.51E-07	1.29 E-07		8.44 E-06	7.91 E-07	8.31E-06	7.91E-07	1.81E-07
Acenaphthylene	2.53E-07	1.81E-09	1.29 E-07		1.01 E-07	9.49 E-09	-2.73E-08	9.49E-09	2.17E-09
Anthracene	1.22E-06	8.71E-09	1.71 E-07		4.88 E-07	4.58 E-08	3.17E-07	4.58E-08	1.04E-08
Arsenic	5.60E-04	4.00E-06	1.43 E-05		2.24 E-04	2.10 E-05	2.10E-04	2.10E-05	4.79E-06
Barium			3.14 E-04		0.00 E+00	0.00 E+00	-3.14E-04	0.00E+00	0.00E+00
Benzo(a)anthracene	4.01E-06	2.86E-08	1.29 E-07		1.60 E-06	1.50 E-07	1.48E-06	1.50E-07	3.43E-08
Benzene	2.14E-04	1.53E-06	1.50 E-04		8.56 E-05	8.03 E-06	-6.44E-05	8.03E-06	1.83E-06
Benzo(a)pyrene			8.57 E-08		0	0	-8.57E-08	0.00E+00	0.00E+00
Benzo(b)fluoranthene	1.48E-06	1.06E-08	1.29 E-07		5.92 E-07	5.55 E-08	4.63E-07	5.55E-08	1.27E-08
Benzo(g,h,i)perylene	2.66E-06	1.90E-08	8.57 E-08		1.06 E-06	9.98 E-08	9.78E-07	9.98E-08	2.28E-08
Benzo(k)fluoranthene	1.48E-06	1.06E-08	1.29 E-07		5.92 E-07	5.55 E-08	4.63E-07	5.55E-08	1.27E-08
Beryllium	0.00	3.00E-06	8.57 E-07		1.68 E-04	1.58 E-05	1.67E-04	1.58E-05	3.60E-06
Butane			1.50 E-01		0	0	-1.50E-01	0.00E+00	0.00E+00
Cadmium	0.00	3.00E-06	7.86 E-05		1.68 E-04	1.58 E-05	8.94E-05	1.58E-05	3.60E-06
Chromium	0.00	3.00E-06	1.00 E-04		1.68 E-04	1.58 E-05	6.80E-05	1.58E-05	3.60E-06
Chrysene	2.38E-06	1.70E-08	1.29 E-07		9.52 E-07	8.93 E-08	8.23E-07	8.93E-08	2.04E-08
Cobalt			6.00 E-06		0	0	-6.00E-06	0.00E+00	0.00E+00
Copper	0.00	6.00E-06	6.07 E-05		3.36 E-04	3.15 E-05	0.00	3.15E-05	7.19E-06
Dibenzo(a,h)anthracene	1.67E-06	1.19E-08	8.57 E-08		6.68 E-07	6.26 E-08	5.82E-07	6.26E-08	1.43E-08
Dichlorobenzene			8.57 E-05		0	0	-8.57E-05	0.00E+00	0.00E+00
Ethane			2.21 E-01		0	0	-2.21E-01	0.00E+00	0.00E+00
Fluoranthene	4.84E-06	3.46E-08	2.14 E-07		1.94 E-06	1.82 E-07	1.72E-06	1.82E-07	4.14E-08
Fluorene	4.47E-06	3.19E-08	2.00 E-07		1.79 E-06	1.68 E-07	1.59E-06	1.68E-07	3.83E-08
Formaldehyde	0.061	4.36E-04	5.36 E-03		2.44 E-02	2.29 E-03	1.90E-02	2.29E-03	5.22E-04
Hexane			1.29 E-01		0	0	-1.29E-01	0.00E+00	0.00E+00
Indeno(1,2,3-cd)pyrene	2.14E-06	1.53E-08	1.29 E-07		8.56 E-07	8.03 E-08	7.27E-07	8.03E-08	1.83E-08
Manganese	0.00	6.00E-06	2.71 E-05		3.36 E-04	3.15 E-05	3.09E-04	3.15E-05	7.19E-06
Mercury	0.00	3.00E-06	1.86 E-05		1.68 E-04	1.58 E-05	1.49E-04	1.58E-05	3.60E-06
Methane			1.64 E-01		0	0	-1.64E-01	0.00E+00	0.00E+00
Molybdenum			7.86 E-05		0	0	-7.86E-05	0.00E+00	0.00E+00
Naphthalene	1.13E-03	8.07E-06	4.36 E-05		4.52 E-04	4.24 E-05	4.08E-04	4.24E-05	9.67E-06
Nickel	0.00	3.00E-06	1.50 E-04		1.68 E-04	1.58 E-05	1.80E-05	1.58E-05	3.60E-06
Pentane			1.86 E-01		0	0	-1.86E-01	0.00E+00	0.00E+00
Phenanathrene	1.05E-05	7.50E-08	1.21 E-06		4.20 E-06	3.94 E-07	2.99E-06	3.94E-07	8.99E-08
Propane			1.14 E-01		0	0	-1.14E-01	0.00E+00	0.00E+00
Pyrene	4.25E-06	3.04E-08	3.57 E-07		1.70 E-06	1.59 E-07	1.34E-06	1.59E-07	3.64E-08
Selenium	0.00	1.50E-05	1.71 E-06		8.40 E-04	7.88 E-05	8.38E-04	7.88E-05	1.80E-05
Toluene	6.20E-03	4.43E-05	2.43 E-04		2.48 E-03	2.33 E-04	2.24E-03	2.33E-04	5.31E-05
Vanadium			1.64 E-04		0	0	-1.64E-04	0.00E+00	0.00E+00
Zinc	0.00	4.00E-06	2.07 E-03		2.24 E-04	2.10 E-05	-1.85E-03	2.10E-05	4.79E-06
Polycyclic Organic Matter (POM)						4.94E-07		4.94E-07	1.13E-07
		Total HAPs =	0.1375	0.0000	0.0302	0.0028			

Notes:
1. Diesel heating value of 140 MBtu/gal
2. Diesel delivery pump maximum capacity is 400 gallon/hr. 400 gal/hr * 0.14 MMBtu/gal = 56 MMBtu/hr
3. 75,000 gallons allows ISU to operate with emergency diesel fuel for one week at 400 gal/hr fuel rate.
4. Emission factor for "Boiler < 100 Million Btu/hr", 45% reduction in NOx because of low-NOx burner (pg 1.3-6).

Table 5-6: Boiler No. 36 (B36) Modification Emission Analysis

Date: Feb-13

Location: Gale Life Science Building #65 Fuel: Natural Gas Equipment Capacity: 1.60 MMBtu/hr

EQUIPMENT EMISSIONS	Emission Factors from EPA AP-42, Section 1.4, Tables 1.4-1 to 1.4-4		Emission Estimates						
			Pre-Project Basis		Post-Project Basis		Changes in PTE		
			Hourly	Annual	Hourly	Annual	Hourly Basis	Annual Basis	
	EF	calc'd EF[1]	0.00 MMBtu/hr	0 hr/yr	1.60 MMBtu/hr	8760 hr/yr			
Pollutant	$lb_E/10^6$ scf	lb_E/MMBtu	lb_E/hr	ton_E/yr	lb_E/hr	ton_E/yr	lb_E/hr	ton_E/yr	lb_E/hr
CO	84	0.082	0	0	1.32 E-01	5.77 E-01	1.32E-01	5.77E-01	1.32E-01
NO_X	100	0.098	0	0	1.57 E-01	6.87 E-01	1.57E-01	6.87E-01	1.57E-01
SO_2	0.60	0.00059	0	0	9.41 E-04	4.12 E-03	9.41E-04	4.12E-03	9.41E-04
PM10	7.60	0.0075	0	0	1.19 E-02	5.22 E-02	1.19E-02	5.22E-02	1.19E-02
PM2.5	7.60	0.0075	0	0	1.19 E-02	5.22 E-02	1.19E-02	5.22E-02	1.19E-02
Pb	0.0005	4.90 E-07	0	0	7.84 E-07	3.44 E-06	7.84E-07	3.44E-06	7.84E-07
VOC	5.50	0.005	0	0	8.63 E-03	3.78 E-02	8.63E-03	3.78E-02	8.63E-03
TOC	11.00	0.011	0	0	1.73 E-02	7.56 E-02	1.73E-02	7.56E-02	1.73E-02
2-Methylnaphthalene	2.4 E-05	2.35 E-08	0	0	3.76 E-08	1.65 E-07	3.76E-08	1.65E-07	3.76E-08
3-Methylchloranthrene	1.8 E-06	1.76 E-09	0	0	2.82 E-09	1.24 E-08	2.82E-09	1.24E-08	2.82E-09
7,12-Dimethylbenz(a)anthracite	1.6 E-05	1.57 E-08	0	0	2.51 E-08	1.10 E-07	2.51E-08	1.10E-07	2.51E-08
Acenaphthene	1.8 E-06	1.76 E-09	0	0	2.82 E-09	1.24 E-08	2.82E-09	1.24E-08	2.82E-09
Acenaphthylene	1.8 E-06	1.76 E-09	0	0	2.82 E-09	1.24 E-08	2.82E-09	1.24E-08	2.82E-09
Anthracene	2.4 E-06	2.35 E-09	0	0	3.76 E-09	1.65 E-08	3.76E-09	1.65E-08	3.76E-09
Arsenic	2.0 E-04	1.96 E-07	0	0	3.14 E-07	1.37 E-06	3.14E-07	1.37E-06	3.14E-07
Barium	4.4 E-03	4.31 E-06	0	0	6.90 E-06	3.02 E-05	6.90E-06	3.02E-05	6.90E-06
Benzo(a)anthracene	1.8 E-06	1.76 E-09	0	0	2.82 E-09	1.24 E-08	2.82E-09	1.24E-08	2.82E-09
Benzene	2.1 E-03	2.06 E-06	0	0	3.29 E-06	1.44 E-05	3.29E-06	1.44E-05	3.29E-06
Benzo(a)pyrene	1.2 E-06	1.18 E-09	0	0	1.88 E-09	8.24 E-09	1.88E-09	8.24E-09	1.88E-09
Benzo(b)fluoranthene	1.8 E-06	1.76 E-09	0	0	2.82 E-09	1.24 E-08	2.82E-09	1.24E-08	2.82E-09
Benzo(g,h,i)perylene	1.2 E-06	1.18 E-09	0	0	1.88 E-09	8.24 E-09	1.88E-09	8.24E-09	1.88E-09
Benzo(k)fluoranthene	1.8 E-06	1.76 E-09	0	0	2.82 E-09	1.24 E-08	2.82E-09	1.24E-08	2.82E-09
Beryllium	1.2 E-05	1.18 E-08	0	0	1.88 E-08	8.24 E-08	1.88E-08	8.24E-08	1.88E-08
Butane	2.1 E+00	2.06 E-03	0	0	3.29 E-03	1.44 E-02	3.29E-03	1.44E-02	3.29E-03
Cadmium	1.1 E-03	1.08 E-06	0	0	1.73 E-06	7.56 E-06	1.73E-06	7.56E-06	1.73E-06
Chromium	1.4 E-03	1.37 E-06	0	0	2.20 E-06	9.62 E-06	2.20E-06	9.62E-06	2.20E-06
Chrysene	1.8 E-06	1.76 E-09	0	0	2.82 E-09	1.24 E-08	2.82E-09	1.24E-08	2.82E-09
Cobalt	8.4 E-05	8.24 E-08	0	0	1.32 E-07	5.77 E-07	1.32E-07	5.77E-07	1.32E-07
Copper	8.5 E-04	8.33 E-07	0	0	1.33 E-06	5.84 E-06	1.33E-06	5.84E-06	1.33E-06
Dibenzo(a,h)anthracene	1.2 E-06	1.18 E-09	0	0	1.88 E-09	8.24 E-09	1.88E-09	8.24E-09	1.88E-09
Dichlorobenzene	1.2 E-03	1.18 E-06	0	0	1.88 E-06	8.24 E-06	1.88E-06	8.24E-06	1.88E-06
Ethane	3.1 E+00	3.04 E-03	0	0	4.86 E-03	2.13 E-02	4.86E-03	2.13E-02	4.86E-03
Fluoranthene	3.0 E-06	2.94 E-09	0	0	4.71 E-09	2.06 E-08	4.71E-09	2.06E-08	4.71E-09
Fluorene	2.8 E-06	2.75 E-09	0	0	4.39 E-09	1.92 E-08	4.39E-09	1.92E-08	4.39E-09
Formaldehyde	7.5 E-02	7.35 E-05	0	0	1.18 E-04	5.15 E-04	1.18E-04	5.15E-04	1.18E-04
Hexane	1.8 E+00	1.76 E-03	0	0	2.82 E-03	1.24 E-02	2.82E-03	1.24E-02	2.82E-03
Indeno(1,2,3-cd)pyrene	1.8 E-06	1.76 E-09	0	0	2.82 E-09	1.24 E-08	2.82E-09	1.24E-08	2.82E-09
Manganese	3.8 E-04	3.73 E-07	0	0	5.96 E-07	2.61 E-06	5.96E-07	2.61E-06	5.96E-07
Mercury	2.6 E-04	2.55 E-07	0	0	4.08 E-07	1.79 E-06	4.08E-07	1.79E-06	4.08E-07
Methane	2.30	0.00225	0	0	3.61 E-03	1.58 E-02	3.61E-03	1.58E-02	3.61E-03
Molybdenum	1.1 E-03	1.08 E-06	0	0	1.73 E-06	7.56 E-06	1.73E-06	7.56E-06	1.73E-06
Naphthalene	6.1 E-04	5.98 E-07	0	0	9.57 E-07	4.19 E-06	9.57E-07	4.19E-06	9.57E-07
Nickel	2.1 E-03	2.06 E-06	0	0	3.29 E-06	1.44 E-05	3.29E-06	1.44E-05	3.29E-06
Pentane	2.6 E+00	2.55 E-03	0	0	4.08 E-03	1.79 E-02	4.08E-03	1.79E-02	4.08E-03
Phenanathrene	1.7 E-05	1.67 E-08	0	0	2.67 E-08	1.17 E-07	2.67E-08	1.17E-07	2.67E-08
Propane	1.6 E+00	1.57 E-03	0	0	2.51 E-03	1.10 E-02	2.51E-03	1.10E-02	2.51E-03
Pyrene	5.0 E-06	4.90 E-09	0	0	7.84 E-09	3.44 E-08	7.84E-09	3.44E-08	7.84E-09
Selenium	2.4 E-05	2.35 E-08	0	0	3.76 E-08	1.65 E-07	3.76E-08	1.65E-07	3.76E-08
Toluene	3.4 E-03	3.33 E-06	0	0	5.33 E-06	2.34 E-05	5.33E-06	2.34E-05	5.33E-06
Vanadium	2.3 E-03	2.25 E-06	0	0	3.61 E-06	1.58 E-05	3.61E-06	1.58E-05	3.61E-06
Zinc	2.9 E-02	2.84 E-05	0	0	4.55 E-05	1.99 E-04	4.55E-05	1.99E-04	4.55E-05
Polycyclic Organic Matter (POM)				0.00E+00		7.83E-08		7.83E-08	1.79E-08
		Total HAPs =	0	0	0.003	0.013			

Notes: 1. Natural gas heating value of 1020 Btu/SCF
2. Boiler 36 is configured to work only with Emergency Generator # 8.

Table 5-7: Boiler No. 37 (B37) Modification Emission Analysis

Date: Feb-13

Location: Rendezvous Bldg #38 | Fuel: Natural Gas | Equipment Capacity: 2.50 MMBtu/hr

EQUIPMENT EMISSIONS	Emission Factors from EPA AP-42, Section 1.4, Tables 1.4-1 to 1.4-4		Emission Estimates						
			Pre-Project Basis		Post-Project Basis		Changes in PTE		
			Hourly	Annual	Hourly	Annual	Hourly Basis	Annual Basis	
			0.00	0	2.50	8,760			
	EF	calc'd EF[1]	MMBtu/hr	hr/yr	MMBtu/hr	hr/yr			
Pollutant	$lb_E/10^6$ scf	lb_E/MMBtu	lb_E/hr	ton_E/yr	lb_E/hr	ton_E/yr	lb_E/hr	ton_E/yr	lb_E/hr
CO	84	0.082	0	0	2.06 E-01	9.02 E-01	2.06E-01	9.02E-01	2.06E-01
NO_X[2]	80.6	0.079	0	0	1.98 E-01	8.65 E-01	1.98E-01	8.65E-01	1.98E-01
SO_2	0.60	0.00059	0	0	1.47 E-03	6.44 E-03	1.47E-03	6.44E-03	1.47E-03
PM10	7.6	0.0075	0	0	1.86 E-02	8.16 E-02	1.86E-02	8.16E-02	1.86E-02
PM2.5	7.6	0.0075	0	0	1.86 E-02	8.16 E-02	1.86E-02	8.16E-02	1.86E-02
Pb	0.0005	4.90 E-07	0	0	1.23 E-06	5.37 E-06	1.23E-06	5.37E-06	1.23E-06
VOC	5.50	0.005	0	0	1.35 E-02	5.90 E-02	1.35E-02	5.90E-02	1.35E-02
TOC	11.00	0.011	0	0	2.70 E-02	1.18 E-01	2.70E-02	1.18E-01	2.70E-02
2-Methylnaphthalene	2.4 E-05	2.35 E-08	0	0	5.88 E-08	2.58 E-07	5.88E-08	2.58E-07	5.88E-08
3-Methylchloranthrene	1.8 E-06	1.76 E-09	0	0	4.41 E-09	1.93 E-08	4.41E-09	1.93E-08	4.41E-09
7,12-Dimethylbenz(a)anthracite	1.6 E-05	1.57 E-08	0	0	3.92 E-08	1.72 E-07	3.92E-08	1.72E-07	3.92E-08
Acenaphthene	1.8 E-06	1.76 E-09	0	0	4.41 E-09	1.93 E-08	4.41E-09	1.93E-08	4.41E-09
Acenaphthylene	1.8 E-06	1.76 E-09	0	0	4.41 E-09	1.93 E-08	4.41E-09	1.93E-08	4.41E-09
Anthracene	2.4 E-06	2.35 E-09	0	0	5.88 E-09	2.58 E-08	5.88E-09	2.58E-08	5.88E-09
Arsenic	2.0 E-04	1.96 E-07	0	0	4.90 E-07	2.15 E-06	4.90E-07	2.15E-06	4.90E-07
Barium	4.4 E-03	4.31 E-06	0	0	1.08 E-05	4.72 E-05	1.08E-05	4.72E-05	1.08E-05
Benzo(a)anthracene	1.8 E-06	1.76 E-09	0	0	4.41 E-09	1.93 E-08	4.41E-09	1.93E-08	4.41E-09
Benzene	2.1 E-03	2.06 E-06	0	0	5.15 E-06	2.25 E-05	5.15E-06	2.25E-05	5.15E-06
Benzo(a)pyrene	1.2 E-06	1.18 E-09	0	0	2.94 E-09	1.29 E-08	2.94E-09	1.29E-08	2.94E-09
Benzo(b)fluoranthene	1.8 E-06	1.76 E-09	0	0	4.41 E-09	1.93 E-08	4.41E-09	1.93E-08	4.41E-09
Benzo(g,h,i)perylene	1.2 E-06	1.18 E-09	0	0	2.94 E-09	1.29 E-08	2.94E-09	1.29E-08	2.94E-09
Benzo(k)fluoranthene	1.8 E-06	1.76 E-09	0	0	4.41 E-09	1.93 E-08	4.41E-09	1.93E-08	4.41E-09
Beryllium	1.2 E-05	1.18 E-08	0	0	2.94 E-08	1.29 E-07	2.94E-08	1.29E-07	2.94E-08
Butane	2.1 E+00	2.06 E-03	0	0	5.15 E-03	2.25 E-02	5.15E-03	2.25E-02	5.15E-03
Cadmium	1.1 E-03	1.08 E-06	0	0	2.70 E-06	1.18 E-05	2.70E-06	1.18E-05	2.70E-06
Chromium	1.4 E-03	1.37 E-06	0	0	3.43 E-06	1.50 E-05	3.43E-06	1.50E-05	3.43E-06
Chrysene	1.8 E-06	1.76 E-09	0	0	4.41 E-09	1.93 E-08	4.41E-09	1.93E-08	4.41E-09
Cobalt	8.4 E-05	8.24 E-08	0	0	2.06 E-07	9.02 E-07	2.06E-07	9.02E-07	2.06E-07
Copper	8.5 E-04	8.33 E-07	0	0	2.08 E-06	9.13 E-06	2.08E-06	9.13E-06	2.08E-06
Dibenzo(a,h)anthracene	1.2 E-06	1.18 E-09	0	0	2.94 E-09	1.29 E-08	2.94E-09	1.29E-08	2.94E-09
Dichlorobenzene	1.2 E-03	1.18 E-06	0	0	2.94 E-06	1.29 E-05	2.94E-06	1.29E-05	2.94E-06
Ethane	3.1 E+00	3.04 E-03	0	0	7.60 E-03	3.33 E-02	7.60E-03	3.33E-02	7.60E-03
Fluoranthene	3.0 E-06	2.94 E-09	0	0	7.35 E-09	3.22 E-08	7.35E-09	3.22E-08	7.35E-09
Fluorene	2.8 E-06	2.75 E-09	0	0	6.86 E-09	3.01 E-08	6.86E-09	3.01E-08	6.86E-09
Formaldehyde	7.5 E-02	7.35 E-05	0	0	1.84 E-04	8.05 E-04	1.84E-04	8.05E-04	1.84E-04
Hexane	1.8 E+00	1.76 E-03	0	0	4.41 E-03	1.93 E-02	4.41E-03	1.93E-02	4.41E-03
Indeno(1,2,3-cd)pyrene	1.8 E-06	1.76 E-09	0	0	4.41 E-09	1.93 E-08	4.41E-09	1.93E-08	4.41E-09
Manganese	3.8 E-04	3.73 E-07	0	0	9.31 E-07	4.08 E-06	9.31E-07	4.08E-06	9.31E-07
Mercury	2.6 E-04	2.55 E-07	0	0	6.37 E-07	2.79 E-06	6.37E-07	2.79E-06	6.37E-07
Methane	2.30	0.00225	0	0	5.64 E-03	2.47 E-02	5.64E-03	2.47E-02	5.64E-03
Molybdenum	1.1 E-03	1.08 E-06	0	0	2.70 E-06	1.18 E-05	2.70E-06	1.18E-05	2.70E-06
Naphthalene	6.1 E-04	5.98 E-07	0	0	1.50 E-06	6.55 E-06	1.50E-06	6.55E-06	1.50E-06
Nickel	2.1 E-03	2.06 E-06	0	0	5.15 E-06	2.25 E-05	5.15E-06	2.25E-05	5.15E-06
Pentane	2.6 E+00	2.55 E-03	0	0	6.37 E-03	2.79 E-02	6.37E-03	2.79E-02	6.37E-03
Phenanathrene	1.7 E-05	1.67 E-08	0	0	4.17 E-08	1.83 E-07	4.17E-08	1.83E-07	4.17E-08
Propane	1.6 E+00	1.57 E-03	0	0	3.92 E-03	1.72 E-02	3.92E-03	1.72E-02	3.92E-03
Pyrene	5.0 E-06	4.90 E-09	0	0	1.23 E-08	5.37 E-08	1.23E-08	5.37E-08	1.23E-08
Selenium	2.4 E-05	2.35 E-08	0	0	5.88 E-08	2.58 E-07	5.88E-08	2.58E-07	5.88E-08
Toluene	3.4 E-03	3.33 E-06	0	0	8.33 E-06	3.65 E-05	8.33E-06	3.65E-05	8.33E-06
Vanadium	2.3 E-03	2.25 E-06	0	0	5.64 E-06	2.47 E-05	5.64E-06	2.47E-05	5.64E-06
Zinc	2.9 E-02	2.84 E-05	0	0	7.11 E-05	3.11 E-04	7.11E-05	3.11E-04	7.11E-05
Polycyclic Organic Matter (POM)				0E+00		1.22E-07		1.22E-07	2.79E-08
		Total HAPs =	0	0	0.005	0.021			

Notes: 1. Natural gas heating value of 1020 Btu/SCF
2. Powerflame low-Nox burner emission factor provided by manufacturer

6. BAGHOUSE CONTROL EQUIPMENT – FORM BCE DOCUMENTATION

The Maintenance Shop (Building 22) contains wood working equipment used to build and repair wooden items for the campus. A variety of tools including saws, sanders, and borers are available for incidental use by maintenance staff. To collect wood dust emissions, the tools are connected to a baghouse via a ducting system. A 5500 cfm fan on the exhaust of the baghouse draws air from the tool area, through the baghouse and then exhausts the air above the Shop.

The baghouse is a Murphy-Rodgers Model MRA-17-420H equipped with 100 68-inch filter bags (MRS68). Per the manufacturer, the filters have an overall particulate matter (PM) removal efficiency of 99.9%, and a removal efficiency of greater than 99% for particulate 5 microns in diameter or greater (correspondence attached in Appendix B).

Particulate emissions are calculated in Table 6-1, below.

Table 6-1: Maintenance Shop Baghouse (BH1) Emissions Analysis

Maintenance Shop (Building 22) Baghouse	Air Flow	Emission Factor[1]	PM Emission Rate	
	cfm	grains/scf	lb/hr	ton/yr
Murphy Rodgers MRA-19-420H	5500	0.0001	0.00471	0.0206

1. From Idaho DEQ Emission Factor Guide for Wood Industry, Attachment B, Sander dust Cyclone Exhaust with Baghouse, 1/8/97.

7. EMISSION INVENTORY WORKBOOK FORMS EI1-EI2 DOCUMENTATION

7.1 Criteria Pollutant Facility-Wide Point Source Emissions

Annual and hourly estimated criteria pollutant emissions from new and modified sources at ISU are summarized on Permit Forms EI1 and EI2 (attached). Pre-project emissions were taken from the emission inventory in the existing permit's Statement of Basis.[5] All previously estimated PM_{10} particulate emissions are assumed to be $PM_{2.5}$. Post-project emissions are taken from the individual unit emission estimates provided in Sections 3 to 6.

7.2 Criteria Pollutant Facility-Wide Fugitive Emissions

ISU is not a production facility. Most emission-generating activities such as combustion, painting and woodworking occur indoors with point sources of emissions.

The ISU campus is extensively landscaped with mostly paved roads. ISU owns street cleaning trucks that are used on campus roadways to remove dust and sand and prevent this material from contributing to air-borne particulate. This equipment was purchased with funds from the Idaho Department of Transportation under an agreement that ISU would also clean the city streets around the perimeter of campus. This street sweeping activity reduces the fugitive particulate emissions that can migrate onto campus.

Fugitive emissions were not estimated for this permit modification.

7.3 Criteria Pollutant Facility-Wide Point Source & Fugitive Emissions Change

The changes in criteria pollutant emissions by individual source and overall are summarized in Permit Forms EI1 and EI2. With the elimination of coal as a Boiler No. 2 fuel, potential SO_2 and NO_x emissions are reduced by 150 tons per year.

7.4 Toxic Air Pollutant Facility-Wide Emissions Change

The changes in TAP emissions from all new and modified sources are calculated in the individual unit emission tables provided in Sections 3 to 6 and summarized in Table 7-1 (attached). The increase in TAP emissions are compared to the Screening Emission Levels (EL) provided in IDAPA 58.01.01.585-586 for each source and overall. TAPs for which an individual source or the net change is greater than their respective EL are highlighted.

7.5 Hazardous Air Pollutant Facility-Wide Emissions

HAP emissions from the facility are primarily from spray booth operations. With this modification,

[5] Carole Zundel, Air Quality Permitting Statement of Basis, Tier II Operating Permit No. T2-030317, July 28, 2006, Table 5.1.

the increase in HAP emissions is 13.2 tons per year from coating operations and 0.01 tons per year from the fuel tanks. There is a 2.6 ton per year decrease in HAP emissions from combustion units, for an overall increase in permitted HAP emissions of 10.7 tons per year. The changes to HAP emissions are detailed on Permit Form EI1. Individual HAP emissions are detailed in Table 7-1.

7.6 Greenhouse Gas Facility-Wide Emissions

Potential and proposed greenhouse gas (GHG) emissions from the facility are calculated in Table 7-2, attached. Carbon dioxide, methane and nitrous oxide emissions from the natural gas-fired boilers, diesel emergency generators and other fossil-fuel consuming units are calculated. These emissions are summed to give a total GHG emission rate. Each individual emission rate is multiplied by their respective Global Warming Potential (GWP) to estimate the Carbon Dioxide Equivalent (CO_2e) emission rate.

The potential CO_2e emission rate for the facility, considering all boilers operating continuously at design conditions, is 93,500 short tons per year. The proposed maximum CO_2e emission rate, including permit-limited boiler operations is 75,000 short tons per year.

7.7 Facility-Wide Total Pollutant Emissions Increase

Because of the elimination of coal as a boiler fuel, there is a net decrease in potential facility emissions. The overall change in permitted criteria and HAP emissions is -130 tons per year (see Permit Form EI1).

Table 7-3 (attached) summarizes the post-project uncontrolled facility potential to emit. Boiler emissions are calculated using each unit's design duty and assuming continuous year-round operation. Paint booth emissions are estimated without the use of exhaust control filters and assuming 5 gallons of coating per day per booth, 365 days per year. Emergency generator emissions are estimated using 500 hours of operation per year. Baghouse emissions are estimated without the use of particulate control filters. With this modification, total facility uncontrolled criteria and HAP emissions are estimated at 159 tons per year. Previously, uncontrolled criteria emissions were estimated at 489 tons per year.

Table EI1.1: Pre-Project Potential to Emit for NSR Regulated Pollutants (Annual)

Emissions Unit	tons/year									
	$PM_{2.5}$	PM_{10}	SO_2	NO_x	CO	VOC	THAPs	Lead	$CO2_e$	GHG
Boiler No. 1: 75.4 MMscf/yr	0.29	0.29	0.023	3.77	3.17	0.21	0.07	1.9E-05		
Boiler No. 2: Coal or NG	0.022	0.022	94.9	56.2	1.9	0.12	2.61	8.1E-04		
Boiler No. 3: 173 MMscf/yr	0.657	0.657	0.052	4.32	7.26	0.476	0.17	4.3E-05		
Boiler No. 4: 468 MMscf/yr	1.78	1.78	0.14	11.70	19.7	1.29	0.45	1.2E-04		
Boiler No. 36 (Bldg 65)	0	0	0	0	0	0	0	0		
Boiler No. 37 (Bldg 38)	0	0	0	0	0	0	0	0		
Fuel Tank No. 1- Diesel	0	0	0	0	0	0	0	0		
Fuel Tank No. 2- Gasoline	0	0	0	0	0	0	0	0		
Paint Booth No. 1 (Bldg 48)	0	0	0	0	0	0	0	0		
Paint Booth No. 2 (Bldg 48)	0	0	0	0	0	0	0	0		
Paint Booth No. 3 (Bldg 22)	0	0	0	0	0	0	0	0		
Shop Baghouse No. 1 (Bldg 22)	0	0	0	0	0	0	0	0		
Totals	**2.74**	**2.74**	**95.11**	**75.99**	**32.03**	**2.09**	**3.30**	**9.9E-04**	**Not calculated**	

Table EI1.2: Post-Project Potential to Emit for NSR Regulated Pollutants (Annual)

Emissions Unit	tons/year									
	$PM_{2.5}$	PM_{10}	SO_2	NO_x	CO	VOC	THAPs	Lead	$CO2_e$	GHG
Boiler No. 1: Decommissioned	0	0	0	0	0	0	0	0	0	0
Boiler No. 2: NG only	0.124	0.124	0.0098	1.63	1.37	0.09	0.03	8.1E-06	1950	1949
Boiler No. 3: 203 MMscf/yr	0.771	0.771	0.061	5.08	8.53	0.558	0.20	5.1E-05	12183	12171
Boiler No. 4: 498 MMscf/yr + Diesel Ops	1.90	1.93	0.15	12.79	21.1	1.38	0.48	1.7E-04	30732	30700
Boiler No. 36 (Bldg 65)	0.052	0.052	0.0041	0.69	0.58	0.038	0.013	3.4E-06	818	817
Boiler No. 37 (Bldg 38)	0.082	0.082	0.0064	0.87	0.90	0.059	0.021	5.4E-06	1279	1277
Fuel Tank No. 1- Diesel	0	0	0	0	0	0.0012	0.001	0	0	0
Fuel Tank No. 2- Gasoline	0	0	0	0	0	0.583	0.010	0	0	0
Paint Booth No. 1 (Bldg 48)	0.016	0.016	0	0	0	3.88	4.07	0	0	0
Paint Booth No. 2 (Bldg 48)	0.016	0.016	0	0	0	3.88	4.07	0	0	0
Paint Booth No. 3 (Bldg 22)	0.008	0.008	0	0	0	1.80	0.63	0	0	0
Shop Baghouse No. 1 (Bldg 22)	0.021	0.021	0	0	0	0.00	0	0	0	0
Totals	**2.99**	**3.02**	**0.23**	**21.04**	**32.47**	**12.27**	**9.5**	**2.4E-04**	**46962**	**46915**

Table EI1.3: Changes in Potential to Emit for NSR Regulated Pollutants (Annual)

Emissions Unit	tons/year									
	$PM_{2.5}$	PM_{10}	SO_2	NO_x	CO	VOC	THAPs	Lead	$CO2_e$	GHG
Boiler No. 1- shared stack w/ No.2 Boiler No. 2- shared stack w/ No.1	-0.19	-0.19	-94.91	-58.35	-3.71	-0.24	-2.65	-8.20E-04	1950	1949
Boiler No. 3	0.11	0.11	0.0090	0.75	1.27	0.08	0.03	7.52E-06	12183	12171
Boiler No. 4	0.12	0.15	0.0091	1.09	1.40	0.10	0.03	0.00	30732	30700
Boiler No. 36 (Bldg 65)	0.052	0.052	0.0041	0.69	0.58	0.038	0.013	3.44E-06	818	817
Boiler No. 37 (Bldg 38)	0.082	0.082	0.0064	0.87	0.90	0.059	0.021	5.37E-06	1279	1277
Fuel Tank No. 1- Diesel	0	0	0	0	0	0.0012	0.001	0	0	0
Fuel Tank No. 2- Gasoline	0	0	0	0	0	0.58	0.010	0	0	0
Paint Booth No. 1 (Bldg 48)	0.016	0.016	0	0	0	3.88	4.07	0	0	0
Paint Booth No. 2 (Bldg 48)	0.016	0.016	0	0	0	3.88	4.07	0	0	0
Paint Booth No. 3 (Bldg 22)	0.008	0.008	0	0	0	1.80	0.63	0	0	0
Shop Baghouse No. 1 (Bldg 22)	0.021	0.021	0	0	0	0	0	0	0	0
Increase in Emissions	**0.43**	**0.46**	**0.03**	**3.4**	**4.1**	**N/A**	**N/A**	**7.1E-05**	**N/A**	**N/A**
Facility Change in Emissions	**0.25**	**0.27**	**-94.9**	**-55.0**	**0.44**	**10.2**	**6.2**	**-7.5E-04**	**46962**	**46915**

Table EI2.1: Pre-Project Potential to Emit for NSR Regulated Pollutants (Hourly)

Emissions Unit	lbs/hr					
	$PM_{2.5}$	PM_{10}	SO_2	NO_x	CO	VOC
Boiler No. 1: 32.05 MMBtu/hr	0.239	0.239	0.019	3.14	2.64	0.17
Boiler No. 2: Coal or NG	0.0128	0.0128	47.7	32.6	1.89	0.12
Boiler No. 3: 26.92 MMBtu/hr	0.201	0.201	0.016	1.32	2.22	0.145
Boiler No. 4: 72.84 MMBtu/hr NG	0.54	0.54	0.043	3.57	6.0	0.39
Boiler No. 36 (Bldg 65)	0	0	0	0	0	0
Boiler No. 37 (Bldg 38)	0	0	0	0	0	0
Fuel Tank No. 1- Diesel	0	0	0	0	0	0
Fuel Tank No. 2- Gasoline	0	0	0	0	0	0
Paint Booth No. 1 (Bldg 48)	0	0	0	0	0	0
Paint Booth No. 2 (Bldg 48)	0	0	0	0	0	0
Paint Booth No. 3 (Bldg 22)	0	0	0	0	0	0
Shop Baghouse No. 1 (Bldg 22)	0	0	0	0	0	0
Totals	**0.99**	**0.99**	**47.78**	**40.63**	**12.75**	**0.83**

Table EI2.2: Post-Project Potential to Emit for NSR Regulated Pollutants (Hourly)

Emissions Unit	lbs/hr					
	$PM_{2.5}$	PM_{10}	SO_2	NO_x	CO	VOC
Boiler No. 1: 32.05 MMBtu/hr	0.000	0.000	0.000	0.00	0.00	0.00
Boiler No. 2: NG only, no baghouse	0.171	0.171	0.014	2.25	1.89	0.12
Boiler No. 3: 26.92 MMBtu/hr	0.201	0.201	0.016	1.32	2.22	0.15
Boiler No. 4: Diesel or NG	0.54	0.54	0.043	3.60	6.0	0.39
Boiler No. 36 (Bldg 65)	0.012	0.012	9.4E-04	0.16	0.13	0.0086
Boiler No. 37 (Bldg 38)	0.019	0.019	0.0015	0.20	0.21	0.013
Fuel Tank No. 1- Diesel	0	0	0	0	0	0.002
Fuel Tank No. 2- Gasoline	0	0	0	0	0	1.14
Paint Booth No. 1 (Bldg 48)	0.0067	0.0067	0	0	0	1.62
Paint Booth No. 2 (Bldg 48)	0.0067	0.0067	0	0	0	1.62
Paint Booth No. 3 (Bldg 22)	0.0064	0.0064	0	0	0	1.50
Shop Baghouse No. 1 (Bldg 22)	0.0047	0.0047	0	0	0	0.00
Totals	**0.97**	**0.97**	**0.07**	**7.53**	**10.45**	**6.56**

Table EI2.3: Changes in Potential to Emit for NSR Regulated Pollutants (Hourly)

Emissions Unit	lbs/hr					
	$PM_{2.5}$	PM_{10}	SO_2	NO_x	CO	VOC
Boiler No. 1	-0.24	-0.24	-0.02	-3.14	-2.64	-0.17
Boiler No. 2	0.16	0.16	-47.69	-30.35	0	0
Boiler No. 3	0	0	0	0	0	0
Boiler No. 4	0	0	0	0.03	0	0
Boiler No. 36 (Bldg 65)	0.012	0.012	0.0009	0.157	0.13	0.009
Boiler No. 37 (Bldg 38)	0.019	0.019	0.0015	0.198	0.21	0.013
Fuel Tank No. 1- Diesel	0	0	0	0	0	0.002
Fuel Tank No. 2- Gasoline	0	0	0	0	0	1.14
Paint Booth No. 1 (Bldg 48)	0.0067	0.0067	0	0	0	1.62
Paint Booth No. 2 (Bldg 48)	0.0067	0.0067	0	0	0	1.62
Paint Booth No. 3 (Bldg 22)	0.0064	0.0064	0	0	0	1.50
Shop Baghouse No. 1 (Bldg 22)	0.0047	0.0047	0	0	0	0
Increase in Emissions	**0.06**	**0.06**	**0.00**	**0.38**	**0.33**	**NA**
Facility Change in Emissions	**-0.02**	**-0.02**	**-47.7**	**-33.1**	**-2.30**	**5.73**

Table 7-1: Post-Project Change in HAP/TAP Emissions

Hazardous Air Pollutants (HAPs) and Toxic Air Pollutants (TAPs)	Boiler #1	Boiler #2	Boiler #3	Boiler #4 - Natural Gas Hourly	Boiler #4 - Diesel Hourly	Boiler #4 - NG + Diesel Annual	Boiler #36	Boiler #37	Gasoline Tank	Diesel Tank	Automotive Technology Paint Booths	Maintenance Shop Paint Booth	Post-Project Overall Change in Emissions	Screening Emission Level	Any Source Exceeds EL/ Modeling Required?
	lb/hr		lb/hr	lb/hr	lb/hr		lb/hr	lb/hr	lb/hr	lb/hr	lb/hr	lb/hr	lb/hr	lb/hr	
Organic HAPs/TAPs															
Acenaphthene	**-1.5E-08**	**-2.6E-09**	**6.2E-09**			**1.9E-07**	**2.8E-09**	**4.4E-09**					**1.8E-07**	9.1E-05	No
Acenaphthylene	**-1.5E-08**	**-2.6E-09**	**6.2E-09**			**8.4E-09**	**2.8E-09**	**4.4E-09**					**3.7E-09**	9.1E-05	No
Anthracene	**-2.1E-08**	**-3.5E-09**	**8.2E-09**			**1.9E-08**	**3.8E-09**	**5.9E-09**					**1.2E-08**	9.1E-05	No
Benzene	**-1.8E-05**	**-3.1E-06**	**7.2E-06**			**9.1E-06**	**3.3E-06**	**5.1E-06**	**1.3E-03**				**1.3E-03**	8.0E-04	Yes
Benzo(a)anthracene	**-1.5E-08**	**-2.6E-09**	**6.2E-09**			**4.1E-08**	**2.8E-09**	**4.4E-09**					**3.6E-08**		See POM
Benzo(a)pyrene	**-1.0E-08**	**-1.7E-09**	**4.1E-09**			**4.1E-09**	**1.9E-09**	**2.9E-09**					**9.9E-10**	2.0E-06	See POM
Benzo(b)fluoranthene	**-1.5E-08**	**-2.6E-09**	**6.2E-09**			**1.9E-08**	**2.8E-09**	**4.4E-09**					**1.4E-08**		See POM
Benzo(g,h,i)perylene	**-1.0E-08**	**-1.7E-09**	**4.1E-09**			**2.7E-08**	**1.9E-09**	**2.9E-09**					**2.4E-08**	9.1E-05	No
Benzo(k)fluoranthene	**-1.5E-08**	**-2.6E-09**	**6.2E-09**			**1.9E-08**	**2.8E-09**	**4.4E-09**					**1.4E-08**		See POM
Chrysene	**-1.5E-08**	**-2.6E-09**	**6.2E-09**			**2.7E-08**	**2.8E-09**	**4.4E-09**					**2.2E-08**		See POM
Dibenzo(a,h)anthracene	**-1.0E-08**	**-1.7E-09**	**4.1E-09**			**1.8E-08**	**1.9E-09**	**2.9E-09**					**1.5E-08**		See POM
Dichlorobenzene	-1.0E-05	-1.7E-06	4.1E-06	0.0E+00	-8.6E-05		1.9E-06	2.9E-06					-3.1E-06	20	No
Ethyl Benzene											**0.6275**	**0.013**	**6.4E-01**	29	No
Fluoranthene	**-2.6E-08**	**-4.4E-09**	**1.0E-08**			**5.2E-08**	**4.7E-09**	**7.4E-09**					**4.4E-08**	9.1E-05	No
Fluorene	**-2.4E-08**	**-4.1E-09**	**9.6E-09**			**4.8E-08**	**4.4E-09**	**6.9E-09**					**4.1E-08**	9.1E-05	No
Formaldehyde	**-6.5E-04**	**-1.1E-04**	**2.6E-04**			**7.8E-04**	**1.2E-04**	**1.8E-04**				**4.47E-04**	**1.0E-03**	5.1E-04	Yes
Hexane	-5.7E-02	-1.6E-02	0.0E+00	0.0E+00	-1.3E-01		2.8E-03	4.4E-03					-0.065	12	No
Indeno(1,2,3-cd)pyrene	**-1.5E-08**	**-2.6E-09**	**6.2E-09**			**2.5E-08**	**2.8E-09**	**4.4E-09**					**2.0E-08**		See POM
Methyl isobutyl ketone											1.97		1.97	47	No
2-Methylnaphthalene	**-2.1E-07**	**-3.5E-08**	**8.2E-08**			**8.2E-08**	**3.8E-08**	**5.9E-08**					**2.0E-08**	9.1E-05	No
3-Methylchloranthrene	**-1.5E-08**	**-2.6E-09**	**6.2E-09**			**6.2E-09**	**2.8E-09**	**4.4E-09**					**1.5E-09**	2.5E-06	No
Naphthalene	-1.9E-05	-5.4E-06	0.0E+00	0.0E+00	4.1E-04		9.6E-07	1.5E-06		2.4E-03			**2.8E-03**	3.33	No
Phenanathrene	**-1.5E-07**	**-2.5E-08**	**5.8E-08**			**1.5E-07**	**2.7E-08**	**4.2E-08**					**1.0E-07**	9.1E-05	No
Polycyclic Organic Matter (POM)	**-9.8E-08**	**-1.7E-08**	**3.9E-08**			**1.5E-07**	**1.8E-08**	**2.8E-08**					**1.2E-07**	2.0E-06	No
Pyrene	**-4.3E-08**	**-7.3E-09**	**1.7E-08**				**7.8E-09**	**1.2E-08**					**-1.3E-08**	9.1E-05	No
Styrene											0.033		0.03	6.67	No
Toluene	-1.1E-04	-3.0E-05	0.0E+00	0.0E+00	2.2E-03		5.3E-06	8.3E-06	8.7E-03	2.4E-03	8.7E-01	4.6E-01	1.35	25	No
Xylene											1.88	0.070	1.95	29	No
Organic TAPs (non-HAP)															
Pentane	-8.2E-02	-2.3E-02	**0.0E+00**	0.0E+00	-1.9E-01		4.1E-03	6.4E-03					-0.094	118	No
Metals HAPs/TAPs															
Arsenic	**-1.7E-06**	**-2.9E-07**	**6.9E-07**			**3.5E-06**	**3.1E-07**	**4.9E-07**					**5.0E-06**	1.5E-06	Yes
Barium	-1.4E-04	-3.9E-05	0.0E+00	0.0E+00	-3.1E-04		6.9E-06	1.1E-05					**-4.7E-04**	0.033	No
Beryllium	**-1.0E-07**	**-1.7E-08**	**4.1E-08**			**3.6E-06**	**1.9E-08**	**2.9E-08**					**3.6E-06**	2.8E-05	No
Cadmium	**-9.5E-06**	**-1.6E-06**	**3.8E-06**			**7.4E-06**	**1.7E-06**	**2.7E-06**					**4.5E-06**	3.7E-06	Yes
Chromium	-4.4E-05	-1.2E-05	0.0E+00	0.0E+00	6.8E-05		2.2E-06	3.4E-06			1.7E-03	0.0E+00	0.002	0.033	No
Cobalt	-2.6E-06	-7.5E-07	0.0E+00	0.0E+00	-6.0E-06		1.3E-07	2.1E-07					-3.0E-06	0.0033	No
Copper	-2.7E-05	-7.5E-06	0.0E+00	0.0E+00	2.8E-04		1.3E-06	2.1E-06			1.4E-03	0.0E+00	0.0016	0.013	No
Manganese	-1.2E-05	-3.4E-06	0.0E+00	0.0E+00	3.1E-04		6.0E-07	9.3E-07					3.0E-04	0.067	No
Mercury	-8.2E-06	-2.3E-06	0.0E+00	0.0E+00	1.5E-04		4.1E-07	6.4E-07					0.0001	0.003	No
Molybdenum	-3.5E-05	-9.8E-06	0.0E+00	0.0E+00	-7.9E-05		1.7E-06	2.7E-06					-4.0E-05	0.333	No
Nickel	**-1.8E-05**	**-3.1E-06**	**7.2E-06**			**1.1E-05**	**3.3E-06**	**5.1E-06**					**5.3E-06**	2.7E-05	No
Selenium	-7.5E-07	-2.1E-07	0.0E+00	0.0E+00	8.4E-04		3.8E-08	5.9E-08					0.00084	0.013	No
Vanadium	-7.2E-05	-2.0E-05	0.0E+00	0.0E+00	-1.6E-04		3.6E-06	5.6E-06					-0.00008	0.003	No
Zinc	-9.1E-04	-2.6E-04	0.0E+00	0.0E+00	-1.8E-03		4.5E-05	7.1E-05					-0.00105	0.667	No

Note: Bold values represent annually-averaged carcinogenic TAPs .

Table 7-2: Greenhouse Gas Estimated Emissions

Emission Factors (40 CFR 98 Tables C-1,C-2)		CO_2	CH_4	N_2O
Diesel/Gasoline	kg/mmBtu	74.0	3.0E-03	6.0E-04
Natural Gas	kg/mmBtu	53.0	1.0E-03	1.0E-04
Global Warming Potential (Table A-1)		1	21	310

Heating Values (Tables C-1, C-2)	
Diesel	0.138 mmBtu/gal
Gasoline	0.125 mmBtu/gal
N. Gas	1028 mmBtu/mmscf

PTE EGen Annual Hours	500	(includes possible emer. ops)
Permitted EGen Annual Hours	100	(NESHAP limit for EGen 6-9)

Unit	Fuel Type	Design Duty	PTE Emissions						Permitted Emissions					
			Fuel Input	CO_2	CH_4	N_2O	GHG_{mass}	$CO2_e$	Fuel Input	CO_2	CH_4	N_2O	GHG_{mass}	$CO2_e$
		mmBtu/hr	mmBtu/yr	metric tons/yr					mmBtu/yr	metric tons/yr				
Boiler No. 1	NG	-	-	-	-	-	-	-	-	-	-	-	-	-
Boiler No. 2	NG	23.0	201,480	10,682	0.201	0.0201	10,683	10,693	33,410	1,771	0.03	0.003	1,771	1,773
Boiler No. 3	NG	26.9	235,846	12,505	0.236	0.0236	12,505	12,517	208,684	11,064	0.21	0.021	11,065	11,075
Boiler No. 4	NG	72.8	638,078	33,831	0.638	0.0638	33,832	33,864	511,944	27,143	0.51	0.051	27,144	27,170
Boiler No. 4	Diesel	-	-	-	-	-	-	-	10,350	765	0.03	0.006	766	768
Boiler No. 8	NG	1.67	14,664	777	0.015	0.0015	778	778	14,664	777	0.01	0.001	778	778
Boiler No. 9	NG	2.68	23,459	1,244	0.023	0.0023	1,244	1,245	23,459	1,244	0.02	0.002	1,244	1,245
Boiler No. 10	NG	2.51	21,996	1,166	0.022	0.0022	1,166	1,167	21,996	1,166	0.02	0.002	1,166	1,167
Boiler No. 11	NG	2.68	23,451	1,243	0.023	0.0023	1,243	1,245	23,451	1,243	0.02	0.002	1,243	1,245
Boiler No. 12	NG	3.35	29,328	1,555	0.029	0.0029	1,555	1,557	29,328	1,555	0.03	0.003	1,555	1,557
Boiler No. 13	NG	8.40	73,584	3,901	0.074	0.0074	3,902	3,905	73,584	3,901	0.07	0.007	3,902	3,905
Boiler No. 14	NG	5.74	50,282	2,666	0.050	0.0050	2,666	2,669	50,282	2,666	0.05	0.005	2,666	2,669
Boiler No. 15	NG	2.25	19,710	1,045	0.020	0.0020	1,045	1,046	19,710	1,045	0.02	0.002	1,045	1,046
Boiler No. 16	NG	3.84	33,673	1,785	0.034	0.0034	1,785	1,787	33,673	1,785	0.03	0.003	1,785	1,787
Boiler No. 17	NG	1.30	11,388	604	0.011	0.0011	604	604	11,388	604	0.01	0.001	604	604
Boiler No. 18	NG	1.20	10,512	557	0.011	0.0011	557	558	10,512	557	0.01	0.001	557	558
Boiler No. 19	NG	0.30	2,619	139	0.003	0.0003	139	139	2,619	139	0.00	0.000	139	139
Boiler No. 20	NG	3.00	26,280	1,393	0.026	0.0026	1,393	1,395	26,280	1,393	0.03	0.003	1,393	1,395
Boiler No. 21	NG	0.30	2,619	139	0.003	0.0003	139	139	2,619	139	0.00	0.000	139	139
Boiler No. 22	NG	0.73	6,360	337	0.006	0.0006	337	338	6,360	337	0.01	0.001	337	338
Kiln No. 23	NG	0.026	225	12	0.000	0.0000	12	12	225	12	0.00	0.000	12	12
Kiln No. 24	NG	0.10	876	46	0.001	0.0001	46	46	876	46	0.00	0.000	46	46
Burnoff Furnace No. 25	NG	0.20	1,752	93	0.002	0.0002	93	93	1,752	93	0.00	0.000	93	93
Melting Furnace No. 26	NG	0.10	876	46	0.001	0.0001	46	46	876	46	0.00	0.000	46	46
Boiler No. 27	NG	1.75	15,330	813	0.015	0.0015	813	814	15,330	813	0.02	0.002	813	814
Boiler No. 28	NG	0.53	4,599	244	0.005	0.0005	244	244	4,599	244	0.00	0.000	244	244
Boiler No. 29	NG	0.50	4,380	232	0.004	0.0004	232	232	4,380	232	0.00	0.000	232	232
Boiler No. 30	NG	0.50	4,380	232	0.004	0.0004	232	232	4,380	232	0.00	0.000	232	232
Boiler No. 31	NG	0.23	1,971	105	0.002	0.0002	105	105	1,971	105	0.00	0.000	105	105
Boiler No. 32	NG	0.72	6,307	334	0.006	0.0006	334	335	6,307	334	0.01	0.001	334	335
Boiler No. 33	NG	8.28	72,533	3,846	0.073	0.0073	3,846	3,849	72,533	3,846	0.07	0.007	3,846	3,849
Boiler No. 34	NG	0.99	8,672	460	0.009	0.0009	460	460	8,672	460	0.01	0.001	460	460
Boiler No. 35	NG	0.47	4,135	219	0.004	0.0004	219	219	4,135	219	0.00	0.000	219	219
Boiler No. 36 (Emer. Ops)	NG	1.60	14,016	743	0.014	0.0014	743	744	14,016	743	0.01	0.001	743	744
Boiler No. 37	NG	2.50	21,900	1,161	0.022	0.0022	1,161	1,162	21,900	1,161	0.02	0.002	1,161	1,162
Emer. Generator 1	NG	0.54	270	14	0.000	0.0000	14	14	270	14	0.00	0.000	14	14
Emer. Generator 2	Diesel	1.38	690	51	0.002	0.0004	51	51	690	51	0.00	0.000	51	51
Emer. Generator 3	NG	0.88	442	23	0.000	0.0000	23	23	442	23	0.00	0.000	23	23
Emer. Generator 4	Diesel	4.13	2,063	153	0.006	0.0012	153	153	2,063	153	0.01	0.001	153	153
Emer. Generator 5	Diesel	4.08	2,042	151	0.006	0.0012	151	152	2,042	151	0.01	0.001	151	152
Emer. Generator 6	Diesel	1.36	682	50	0.002	0.0004	50	51	136	10	0.00	0.000	10	10
Emer. Generator 7	Diesel	1.36	682	50	0.002	0.0004	50	51	136	10	0.00	0.000	10	10
Emer. Generator 8	Diesel	1.36	682	50	0.002	0.0004	50	51	136	10	0.00	0.000	10	10
Emer. Generator 9	Diesel	6.38	3,188	236	0.010	0.0019	236	237	638	47	0.00	0.000	47	47
Totals		180.8	1,598,026					85,022 metric tons **93,525 short tons**						67,967 metric tons **74,764 short tons**

Table 7-3: Post-Project Uncontrolled Potential to Emit

Emissions Unit (Note 1)	tons/year							
	$PM_{2.5}$	PM_{10}	SO_2	NO_x	CO	VOC	THAPs	
Boiler No. 1	0	0	0	0	0	0	0	
Boiler No. 2	0.75	0.75	0.06	9.88	8.30	0.54	0.19	
Boiler No. 3	0.88	0.88	0.069	5.78	9.71	0.64	0.22	
Boiler No. 4	2.38	2.38	0.19	15.6	26.3	1.72	0.60	
Boiler No. 36 (Bldg 65)	0.052	0.052	0.004	0.69	0.58	0.038	0.013	
Boiler No. 37 (Bldg 38)	0.082	0.082	0.006	0.87	0.90	0.059	0.021	
Fuel Tank No. 1- Diesel	0.000	0.000	0	0	0	0.001	0.001	
Fuel Tank No. 2- Gasoline	0.000	0.000	0	0	0	0.58	0.583	
Paint Booth No. 1 (Bldg 48)	2.95	2.95	0	0	0	7.09	7.4	
Paint Booth No. 2 (Bldg 48)	2.95	2.95	0	0	0	7.09	7.4	
Paint Booth No. 3 (Bldg 22)	1.40	1.40	0	0	0	3.28	1.2	
Shop Baghouse No. 1 (Bldg 22)	2.06	2.06	0	0	0	0	0	
Emergency Generators Nos. 1-4[2]	0.43	0.43	0.40	6.89	2.64	0.37	0.018	
Emergency Generators Nos. 5-9[3]	0.18	0.18	0.007	5.68	1.03	0.25	0.25	
Incinerator[2]	0.30	0.30	0.320	1.17	0.090	0.040	1.3	
Boilers (Items 8-22, 27-34, and 35) Kilns & Furnaces (Items 23-26)[2]	0.98	0.98	0.080	12.89	10.83	0.710	0.5	**Total ton/yr**
Post-Project Totals	**15.4**	**15.4**	**1.1**	**59.5**	**60.4**	**22.4**	**19.7**	**159**
Pre-Project Totals[2]	NA	66.8	144.4	211.2	61.9	4.4	NA	489

Note 1: Boiler emissions shown at full-time, design duty; emergency generators at 500 hours per year; paint booths operating 365 days per year without filters; no baghouse filter

Note 2: Values from Statement of Basis, Tier II Operating Permit and PTC No. T2-030317, July 28, 2006. Boilers, Kilns & Furnaces THAPs conservatively (over) estimated at 0.5 ton/yr

Note 3: Emission estimates from individual unit PTC exemption documentation (see Appendix B).

8. PLOT PLAN – FORM PP DOCUMENTATION

8.1 Facility Boundary

The ISU campus is approximately 1100 acres. The property is not fenced and public access is unrestricted.

8.2 Building Dimensions

While the campus is made up a more than 70 buildings, there are only five buildings associated with the new and modified equipment included in this application. Figure 8-1: Campus Map, shows the location of the equipment associated with this permit action.

Building roof heights are provided in Table 8-1, below, for the structures included in air dispersion modeling. The only new building associated with this permit action that was not included in previous permitting analyses is Building 38- Rendezvous. The gasoline tank is also new.

Table 8-1: Building Information

Structure ID	Base Elevation (m)	Tier	Height (m)	Description/ Comments
Building 20	1364.9 1364.9	1 2	6.40 10.70	Heat Plant
Building 22	1364.7 1364.7	1 2	4.57 5.49	Maintenance Shop
Building 38	1378.0 1378.0	1 2	15.3 18.1	Rendezvous
Building 65	1383.0 1383.0	1 2	4.72 16.25	Life Science
Gasoline Tank	1369.6	1	2.7	Rectangular outer vault

Idaho State UNIVERSITY

CAMPUS MAP

MAY 2011

Produced by:
Facilities Services
282-2209

Note: No changes authorized without Facilities Services approval

Bldg 65- B36

Bldg 48- PB1&PB2

Bldg 38- B37

Heat Plant HP1-4

Bldg 22- PB3&BH1

Fuel Tanks- DT1&GT1

FREE BUS SERVICE FROM HOLT ARENA

Reduced Parking

Memorial Drive

Stacy Dragila Way

Martin Luther King Jr Way

Red Hill Rd

Bartz Way

Cesar Chavez Ave

10th Ave.

9th Ave.

8th Ave.

7th Ave.

6th Ave.

5th Ave.

4th Ave.

E. Carter St.

E. Loveloy St.

E. Terry St.

E. Putnum St.

E. Dillon St.

E. Humbolt St.

E. Sutter St.

E. Dunn St.

Mountain View Cemetery

N

- Client Parking
- Disabled Parking
- General Parking
- Housing Parking
- Meter Parking
- Official Parking
- Reduced Parking
- Reserved Parking
- Visitors Parking
- ADA Access & Elevator
- Bus Stop
- Emergency Phone
- Hospital - Vacant
- Service Access
- Off - Campus Addresses
- Non - ISU

INTERSTATE 15

19th Ave

15th Ave

8th Ave

5th Ave

4th Ave

Clark St.

Garrier St

Bonneville St

Carter St

Terry St

Humbolt St

IDAHO STATE UNIVERSITY

FORM PP

A	29	ALUMNI HOUSE - MAGNUSC	7th
	28	ART / MUSEUM STORAGE (M	H6
	74	AVIATION MECH (AIR)	POCATELLO AIRPORT T102
	55	BARTZ FIELD (BARTZ)	E7
	65	BIOLOGY - GALE LIFE SCIENCE (LS)	D3
	58	BUSCO PARK	G6
	05	BUSINESS ADMINISTRATION (BA)	H4
	86	BUSINESS / TECH. CENTER	1651 ALVIN RICKEN DR
	47	CADET FIELD (CADET)	E4
	06	CHILD CARE - EARLY LEARNING CENTER / ASISU	G5
	48	COLLEGE OF TECHNOLOGY (RFC)	E3
	35	COLONIAL HALL (COL)	G3
B	84	CONTINUING EDUCATION - ISU (CONED)	1001 N.7th
	59	CREDIT UNION - ISU FEDERAL	F3
	17	DAVIS FIELD HOUSE	G6
	37	DENTAL HYGIENE CLINIC - TRANMER (CLIN)	F4
	32	DENTAL HYGIENE SCIENCES - TRANMER (DA)	G4
	71	DIESEL ELECTRIC - DOWLING (DB)	510 S. MAIN
	73	DIESEL MECHANICS - ARMORY (ARM)	1257 S. 2nd
	62	EDUCATION (ED)	C4
	07	ENGINEERING - LILLIBRIDGE (LEL)	G4
	79	ENGINEERING - MCERC (MEASUREMENT/CNTRL ENGR. RESEARCH CTR)	1030 S. 2nd
C	83	FAMILY MEDICINE / DENTAL SCIENCES (FMED/DS)	C1
	11	FINE ARTS (FA)	H5
	01	FRAZIER HALL (FRAZ)	H3
	33	FUEL STATION - ISU	G7
	63	GARRISON HALL (GARR)	D4
	15	GRAVELEY HALL (GRAV)	G5
	19	GROUNDS SHOP	G8
	16	HAZARDOUS WASTE	G8
	20	HEAT PLANT	H6
	60	HOLT ARENA (HOLT)	B2
D	80	HOSPITAL - VACANT	D2
	82	HUMAN DEVELOPMENT CENTER (HDC)	D1
	13	HYPOSTYLE	G5
	49	INDUSTRIAL CRAFTS (IC)	E4
	78	INFORMATION BOOTH	G4
	77	LAW ENFORCEMENT (LAW)	1480 BARTON RD
	52	LDS INSTITUTE OF RELIGION (INST)	F3
	67	LECTURE CENTER (LC)	C3
	04	LIBERAL ARTS - KEGEL (LA)	H4
	50	LIBRARY - ELI M. OBOLER (LIBR)	F4
E	87	LINEAR ACCELERATOR	1500 ALVIN RICKEN DR
	89	LINEAR ACCELERATOR (INSPECTION TECH. RESEARCH & DEV. LAB)	1511 FORTRESS RD
	18	M & O - FACILITIES SERVICES	H6
	24	MAINTENANCE / WELDING SHOPS	H7
	12	MUSEUM - IDAHO MUSEUM OF NATL. HISTORY (MUSE)	H5
	66	NURSING - BECKLEY (NURS)	C2
	81	NURSING HOME - POCATELLO CARE & REHAB	D2
	88	PERFORMING ARTS CENTER - STEPHENS (SPAC)	D9
	08	PHARMACY - LEONARD HALL (LH)	H4
	03	PHYSICAL SCIENCE / COMPLEX (PS)/(PSC)	G3
F	69	PLANT SCIENCES (PLSCI)	C3
	30	PRESIDENT'S RESIDENCE - SERVEL HOUSE	---
	27	PUBLIC SAFETY	H6
	09	QUADRANGLE - HUTCHINSON MEMORIAL (QUAD)	G4
	44	RECREATION FACILITY (REC)	D5
	40	RED HILL (REDHL)	F5
	45	REED GYMNASIUM (GYM)	D4
	38	RENDEZVOUS (REND)	F4
	26	SHIPPING & RECEIVING / MAINTENANCE SHOPS	H7
G	22	SHOPS	H7
	68	SPEECH PATHOLOGY / AUDIOLOGY (SPA)	C3
	75	SPORTS & ORTHOPEDIC CENTER (SPMED)	C2
	34	ST. JOHN'S CENTER (ST. JOHN)	G4
	31	STUDENT HEALTH CENTER	G5
	14	STUDENT UNION & BOOKSTORE (PSUB)	G5
	02	SWANSON ARCH	G3
	51	TRADE & TECHNOLOGY (T&T)	E4
	21	TRANSPORTATION SERVICES SHOP	H7
H	36	UNIVERSITY BIBLE CHURCH (UBC)	F4
	23	UNIVERSITY STORES - WAREHOUSE #2	H7
	46	VOCATIONAL ARTS (VOART)	E4
		HOUSING	
	70	5th STREET Apt.	I3
	76	GRADUATE HOUSING Apt.	I5
	57	McINTOSH MANOR Apt.	F6
	42	OWEN-REDFIELD COMPLEX (OWEN) Dorm.	E5
	43	DYER HALL Dorm.	E5
	41	NICHOLS HALL Dorm.	F5
I	53	PULLING COURTS Apt.	E3
	38	RENDEZVOUS (REND) Apt.	F4
	54	RIDGE CREST Apt.	F9
	56	SCHUBERT HEIGHTS Apt.	F7
	64	TURNER HOUSE (TURN) Dorm.	D4
	25	UNIVERSITY COURTS Apt.	H7
	72	WEST CAMPUS Apt.	I3

9. MODELING INFORMATION

9.1 Modeling Applicability Assessment

9.1.1 Criteria Pollutant Modeling Applicability

The changes in criteria pollutant emissions associated with this project are summarized in Permit Forms EI1 and EI2. The facility emission inventory identified no criteria pollutant with the potential to be emitted above IDEQ Tier I Modeling Threshold from any individual new or modified process equipment. As shown in Figure 8-1, the sources of emissions associated with this modification are well-spaced throughout the campus, and will not have significant overlapping impacts. Even so, the cumulative increase of criteria emissions from all new or modified equipment is below Case by Case Modeling Thresholds. DEQ concurred in the *10/16/2012 RE: Modeling Protocol for ISU Permit to Construct for proposed Modification to various sources* (K. Schilling, see Appendix D) that the ISU facility does not need to model criteria pollutants for this modification.

9.1.2 TAPs Modeling Applicability

TAPs are potentially emitted from the ISU boilers, fuel tanks, and paint booths. In Table 7-1, the controlled change in emissions for each TAP associated with the proposed action are calculated and compared to the emission screening levels listed in IDAPA 58.01.01 Sections 585 and 586.

For arsenic, benzene, cadmium and formaldehyde, the estimated increases in emission rates from some new and modified equipment exceed their respective screening levels. Therefore, the controlled emission increases of these TAPs from all new and modified equipment are modeled to demonstrate compliance with ambient air quality standards.

Note that two additional TAPS were identified for modeling after the modeling protocol was submitted and approved. A correction to the Boiler No. 4 annual TAP emissions calculations identified estimated maximum arsenic emissions to be above the emission screening level. A change in proposed gasoline tank throughput resulted in benzene emissions above the emission screening level. Emissions of these two TAPS from all modified sources are included in the air dispersion modeling.

9.2 Modeling Analyses Methodology

9.2.1 Model Used

The dispersion model chosen is AERMOD, the United States Environmental Protection Agency (USEPA)-approved dispersion model. AERMOD is applied using the BeeLine BEEST AERMOD processing software.

The sophisticated Prime building downwash algorithm is conservatively applied for the facility. The model is applied as recommended in EPA's Guideline on Air Quality Models (2001), EPA AERMOD model guidance,

and the Idaho DEQ Air Quality Modeling Guidelines, utilizing recommended regulatory default options, the simple and complex terrain options, and not including any urban areas consistent with the IDEQ-approved modeling protocol.

9.2.2 Criteria Pollutant Modeling Methodology

Criteria pollutant modeling is not required for this permit action.

9.2.3 TAPs Modeling Methodology

The facility emission inventory identified four TAPs, arsenic, benzene, cadmium and formaldehyde requiring air dispersion modeling. The TAPs are modeled as part of a Significant Impact Analysis, with only the TAP emissions from new and or modified equipment considered. These four TAPs have IDEQ AACC ambient impact limits for the annual averaging period per IDAPA 58.01.01.586.

Model inputs are discussed in Section 9.3, below. The results of an AERMOD air dispersion analysis of TAP impacts are shown in Table 9-3 (see Section 9.4). Model results reported are the maximum annual average impact at any model receptor in any of the five years modeled.

9.3 Model Input Data

9.3.1 Meteorological Data, Receptor Network

Five years of National Weather Service upper air data from the Simplot Don Siding site from 1997 to 2001 (coupled with Boise upper air data) and one additional year of meteorological data from Inkom in 1995 (also coupled with Boise upper air data) were recommended for this analysis by Kevin Schilling of Idaho DEQ. Electronic model meteorological data files provided by Mr. Schilling, consistent with those recommendations were utilized in accordance with his guidance. All model predicted maximum impacts occurred with the 2001 Don Siding meteorological data set. Second high maximum predicted impacts for most model analyses occurred with the 1995 Inkom meteorological data set.

The model includes rural and urban algorithm options. These options affect the wind speed profile, dispersion rates, and mixing-height formula used in calculating ground-level pollutant concentrations. A protocol was developed by USEPA to classify an area as either rural or urban for dispersion modeling purposes. The classification is based on average heat flux, land use, or population density within a one- or three-kilometer radius from the plant site. Of these techniques, the USEPA has specified that land use is the most definitive criterion (USEPA, 1987). The urban/rural classification scheme based on land use is as follows:

> *The land use within the total area, A_0, circumscribed by a 1-km circle about an area, is classified using the meteorological land use typing scheme proposed by Auer (1978). The classification scheme requires that more than 50% of the area, A_0, be from the following land use types in order to be considered urban for dispersion modeling purposes: heavy industrial (I1); light-moderate industrial*

(I2); commercial (C1); single-family compact residential (R2); and multi-family compact residential (R3). Otherwise, the use of rural dispersion coefficients is appropriate.

The ISU facility is located in south Pocatello. Though it is within city limits, the structures in the vicinity or the modeling domain (other than those included in the BPIP building downwash algorithm) do not appear sufficient to channel or significantly alter wind patterns. Consistent with previous IDEQ approved modeling for the facility, no urban area was included in the modeling.

Figure 9-1, below, shows the location of all point sources. All model sources are indicated in red. Black dots indicate model receptors. The grid is NAD27 UTM coordinates, to be consistent with the NAD27 DEM data. The innermost model receptors can be seen alongside and beyond the side of the building. Note the high density (10 meter receptor spacing) around all modeled sources, and the 36 polar receptors each at 5, 10, 20, 30, 40, and 50 meter spacing around the fuel tank.

Figure 9-1 Model Facility and Source Layout

Figure 9-2, below, shows the entire model domain, including all receptors and all USGS quads included in the domain. The receptor network used consists of 100 meter grid spacing in and around campus covering well beyond all modeled sources, plus 10 meter grid spacing for at least 60 meters in all directions from all affected sources. It emphasizes complete coverage, with added receptor density in the near vicinity of the facility's emission sources affected by the proposed modification. Minimum

receptor spacing is 10 meters around all affected sources, with higher 100 meter density across the rest of campus and the surrounding area. Increased receptor density was not required because modeling analyses shows that all model predicted maximum impacts occur well within areas of 10 meter receptor density.

Figure 9-2: Model Domain and Receptor Network

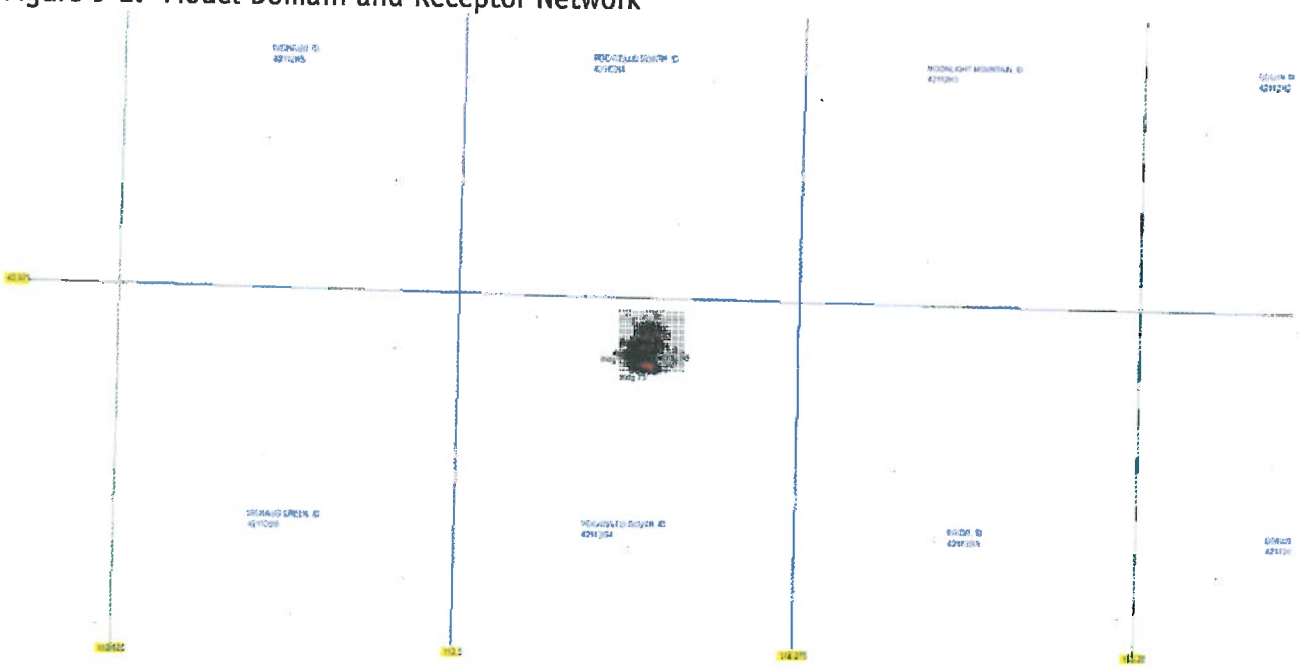

The AERMAP program is used to set elevations from USGS NAD data for 1927 datum. The facility was gridded for all model buildings, source bases, and model receptors, and to process elevation and terrain data to be ready for the AERMOD analysis.

9.3.2 Emissions Release Parameters

A summary of the facility point emission sources and their release parameters is provided in Table 9-1, below. The parameters for Boilers Nos. 1-4 are taken from the 2006 modeling except that the Boilers Nos. 1 and 2 shared stack exit velocity was adjusted downward to account for the reduced emissions associated with the decommissioning of Boiler 1. Exit velocity calculations are provided in App. A.

Emissions from Boiler 37 stack emit vertically above the roof of Building 38. Exit velocity calculations are provided in Appendix A. Boiler 36, the Gasoline Tank, and Paint Booth 3 stacks are equipped with rain-caps, so their exhaust velocities are set to 0.001 meters per second, in accordance with EPA and IDEQ guidance.

Table 9-1: Emission Source Release Data

Emissions units - *modification change*	Stack ID	UTM Easting (m)	UTM Northing (m)	Base Elevation (m)	Stack Height (ft)	Stack Diam (ft)	Stack Temp (K)	Exit velocity (ft/s)	Stack details
Boiler No. 1	HP1	383074.0	4745868.0	1364.9	100	5.5	452.6	9.00	vertical
Boiler No. 2	HP2	383074.0	4745868.0	1364.9	100	5.5	452.6	5.18	vertical
Boiler No. 3	HP3	383059.0	4745893.0	1364.9	39	3.0	505.4	9.50	vertical
Boiler No. 4	HP4	383056.0	4745897.0	1364.9	39	5.0	434.8	17.83	vertical
Boiler No. 36 (Bldg 65)	B36	383256.0	4746851 0	1383.0	16.1	0.66	422.0	0.003	rain-cap
Boiler No. 37 (Bldg 38)	B37	383124.9	4746413.2	1382.0	57.4	1.17	433.0	12.0	vertical
Gasoline Tank No. 1	GT1	383271.3	4745808.8	1369.6	20	0.17	283	0.003	rain-cap
Paint Booth 3 (Bldg 22)	PB3	383148.5	4746831 5	1364.7	24.9	2.7	343.0	0.003	rain-cap

Table 9-2, below, lists the pollutant emission rates modeled from each source.

Table 9-2: Emission Source Pollutant Rates

Emissions units - *modification change*	Stack ID	Change in Annual Emissions, lbs/hr			
		Arsenic	Benzene	Cadmium	Formaldehyde
Boiler No. 1- *eliminated*	HP1	-1.7E-06	-1.8E-05	-9.5E-06	-6.5E-04
Boiler No. 2 - *no coal*	HP2	-2.9E-07	-3.1E-06	-1.6E-06	-1.1E-04
Boiler No. 3	HP3	6.9E-07	7.2E-06	3.8E-06	2.6E-04
Boiler No. 4	HP4	5.5E-06	9.1E-06	7.4E-06	7.8E-04
Boiler No. 36	B36	3.1E-07	3.3E-06	1.7E-06	1.2E-04
Boiler No. 37	B37	4.9E-07	5.1E-06	2.7E-06	1.8E-04
Gasoline Tank No.1	GT1	0	1.3E-03	0	0
Paint Booth No. 3	PB3	0	0	0	4.5E-04

9.3.3 Elevation Data

All building base, source base and receptor elevations used in this modeling analysis are calculated from USGS NAD 27 one arc-second NED data using the Bee-Line BEEST preprocessing system and the AERMAP program. Documentation for the AERMAP run is included with the electronic files accompanying this submittal. The base elevation and emission height of each emission source are listed in Table 9-1.

9.4 Evaluation of Compliance with Standards

Table 9-3, below, summarizes the results of the AERMOD air dispersion analysis for the site. The ambient

air quality impact limits applicable to this analysis for TAPS are the IDAPA 58.01.01.586 AACCs. The maximum ambient concentration shown in Table 9-3 is the maximum model-predicted impact at any receptor in any year for all analyses.

Table 9-3: Comparison of Predicted Impacts with Applicable Ambient Standards

Pollutant	Averaging Period	Model Predicted Maximum Total Concentration ($\mu g/m^3$)	AACC ($\mu g/m^3$)	Max Pred Impact as % of AACC	Met file assoc w/ max pred. impact	Location of Predicted Maximum Impact
Arsenic	annual	0.00004	0.00023	17.4	DS 2001	14m SE of B36
Benzene	annual	0.065	0.12	54.2%	DS 2001	40m ENE of fuel tank
Cadmium	annual	0.00023	0.00056	41.1%	DS 2001	25m ESE of B36
Formaldehyde	annual	0.0667	0.077	86.5%	DS 2001	Rooftop 15m SE of P83

As shown in Table 9-3, maximum predicted annual average impacts are within allowable impact limits. Figures showing the maximum predicted impacts for each pollutant are included in the electronic modeling files submitted in support of this modeling application.

All files necessary to duplicate the AERMOD modeling analysis, document the AERMAP application, or verify the details behind information provided in this modeling description are included in the zipped electronic files included in this submittal.

THIS PAGE INTENTIONALLY LEFT BLANK FOR TWO-SIDED PRINTING

10. FEDERAL REGULATION APPLICABILITY – FORM FRA DOCUMENTATION

10.1 New Source Performance Standards

EPA has established NSPS for new, modified, or reconstructed facilities and source categories. ISU is not a designated facility. The combined capacity of the diesel and gasoline fueling station is 10,000 gallons, less than the 19,800 gallon threshold for applicability by NSPS Subpart Kb.

10.1.1 Subpart Ce: Emission Guidelines for Hospital/Medical/ Infectious Waste Incinerators

ISU has one pathological incinerator installed at the Life Sciences Building (#65) used to incinerate animal tissue and cadavers.

40 CFR Part 60, Subpart Ce NSPS:	Emission Guidelines and Compliance Times for Hospital/Medical/ Infectious Waste Incinerators

§ 60.31e Definitions

In accordance with § 60.31e, terms used but not defined in this subpart have the meaning given them in the Clean Air Act and in subparts A, B, and Ec of this part.

In accordance with Subpart Ec § 60.51c, *pathological waste* means waste material consisting of only human or animal remains, anatomical parts, and/or tissue, the bags/container used to collect and transport the waste material, and animal bedding (if applicable).

§ 60.32e Designated facilities

In accordance with § 60.32e(2), for incinerators built between June 20, 1996 and December 1, 2008, a combustor is not subpart to this subpart when only pathological waste, low-level radioactive waste, and/or chemotherapeutic waste is burned, provided the owner or operator of the combustor notifies the administrator of an exemption claim; and keeps records on a calendar quarter basis of the periods of time when only pathological waste, low-level radioactive waste, and/or chemotherapeutic waste is burned.

ISU only burns pathological waste in the incinerator so it is not subject to this subpart. The recordkeeping requirement was incorporated into the previous permit by IDEQ, the administrator of this subpart.

10.1.2 Subpart Dc: Small Industrial-Commercial-Institutional Steam Generating Units

ISU has one boiler, Boiler No. 4, which meets the eligibility requirements of this subpart.

40 CFR Part 60, Subpart Dc NSPS:	Small Industrial-Commercial-Institutional Steam Generating Units

§ 60.40c Applicability and delegation of authority

In accordance with § 60.40c(a), this subpart applies to each steam generating unit for which construction, modification, or reconstruction is commenced after June 9, 1989 and that has a maximum design heat input capacity greater than 10 MMBtu/hr and less than or equal to 100 MMBtu/hr.

The Heat Plant boilers at ISU all fall within the applicable duty range but only Boiler No. 4 was constructed after the applicability date. Boilers Nos. 2 and 3 were constructed in 1947 and 1957, respectively.

In accordance with § 60.40c(b), in delegating implementation and enforcement authority to a State, § 60.48c(a)(4) shall be retained by the Administrator and not transferred to a State.

In accordance with § 60.40c(c), applicable units are not subject to the sulfur dioxide or particulate matter emission limits, performance testing, or monitoring requirements under this subpart during periods of combustion research, as defined in the subpart.

§ 60.41c Definitions

ISU will normally operate Boiler No. 4 with natural gas as fuel but is pursuing the use of diesel as an emergency fuel with this permit action. Diesel falls under the definitions of *distillate oil* in this section.

§ 60.42c Standards for sulfur dioxide (SO2)

In accordance with § 60.42c(d), no owner or operator of an affected facility shall combust oil in the affected facility that contains greater than 0.5 weight percent sulfur. The percent reduction requirements are not applicable to affected facilities under this paragraph.

In accordance with § 60.42c(h), compliance with the fuel oil sulfur limits under this section may be determined based on a certification from the fuel supplier, as described under § 60.48c(f) for distillate oil-fired affected facilities with heat input capacities between 10 and 100 MMBtu/hr.

In accordance with § 60.42c(i), fuel oil sulfur limits under this section apply at all times, including periods of startup, shutdown and malfunction.

§ 60.43c Standards for particulate matter (PM)

In accordance with § 60.43c(c), discharged gases from an affected facility that combusts oil and has a heat input capacity of 30 MMBtu/hr or greater shall no exhibit greater than 20 percent opacity (6-minute average), except for one 6-minute period per hour of not more than 27 percent opacity.

In accordance with § 60.43c(d), the PM and opacity standards under this section apply at all times, except periods of startup, shutdown and malfunction.

In accordance with § 60.43c(e)(4), an owner or operator of an affected facility that combusts only oil that contains no more than 0.50 weight per sulfur and not using a post-combustion technology to reduce PM or SO2 emissions is not subject to the PM limits in this section.

§ 60.44c Compliance and performance test methods and procedures for sulfur dioxide

§ 60.45c Compliance and performance test methods and procedures for particulate matter

§ 60.46c Emission monitoring for sulfur dioxide

In accordance with § 60.46c(e), monitoring requirements of this section do not apply to facilities that seek to demonstrate compliance with the SO2 standards based on fuel supplier certification as described under § 60.48c(f).

§ 60.47c Emission monitoring for particulate matter

In accordance with § 60.47c(c), owners and operators of affected facilities that burn only distillate oil that contains no more than 0.5 weight percent sulfur that do not use a post-combustion technology to reduce SO2 or PM emissions and that are subject to an opacity standard in § 60.43c(c) are not required to operate a continuous opacity monitoring system (COMS) if they follow the applicable procedures in § 60.48c(f).

§ 60.48c Reporting and recordkeeping requirements

In accordance with § 60.48c(a), the owner or operator of each affected facility shall submit notification of the date of construction or reconstruction and actual startup, as provided by §

60.7. The notification shall include the design heat capacity, fuels to be combusted, the annual capacity factor anticipated for operating the facility based on total and individual fuels fired.

In accordance with § 60.48c(a), the owner or operator of each affected facility subject to the opacity limits of 60.43c(c) shall submit excess emission reports for any excess emissions from the affected facility that occur during the reporting period and maintain records as applicable to the visible emissions monitoring method used.

In accordance with § 60.48c(d), the owner or operator of each affected facility subject to the fuel oil sulfur limits of 60.42c shall submit reports to the Administrator. In accordance with § 60.48c(e), if fuel supplier certification is used to demonstrate compliance with SO2 standards, the report shall include a certified statement signed by the owner or operator of the affected facility that the records of fuel supplier certifications submitted represent all of the fuel combusted during the reporting period.

In accordance with § 60.48c(f), the fuel supplier certification for distillate oil will include the name of the supplier, a statement that the oil complies with definition of distillate oil in § 60.41c, and the maximum sulfur content of the oil.

In accordance with § 60.48c(g)(2), the owner or operator shall record and maintain records of the amount of each fuel (in ISU's case: natural gas and distillate oil) combusted in each affected facility (Boiler No. 4) during each calendar month.

In accordance with § 60.48c(i), records required under this section will be maintained for a period of two years following the date of such record.

In accordance with § 60.48c(j), the reporting period for the reports required under this subpart is each six-month period. All reports shall be submitted to the Administrator and shall be postmarked by the 30th day following the end of the reporting period.

ISU will only use diesel fuel in the event of an emergency. Since the normal boiler fuel is natural gas, reports will not be submitted unless diesel fuel is used in Boiler #4 in a reporting period.

10.1.3 Subpart Ec: Standards of Performance for Hospital/Medical/Infectious Waste Incinerators

ISU has one pathological incinerator installed at the Life Sciences Building (#65).

40 CFR Part 60, Subpart EC NSPS:	Standards of Performance for Hospital/Medical/ Infectious Waste Incinerator for Which Construction is Commenced After June 20, 1996

§ 60.50c Applicability and delegation of authority

In accordance with § 60.50c(b), a combustor is not subject to this subpart during periods when only pathological waste, low-level radioactive waste, and/or chemotherapeutic waste (all defined in § 60.51c) is burned.

§ 60.51c Definitions

Pathological waste means waste material consisting of only human or animal remains, anatomical parts, and/or tissue, the bags/container used to collect and transport the waste material, and animal bedding (if applicable).

ISU only burns pathological waste in the incinerator so it is not subject to this subpart.

10.1.4 Subpart IIII: Stationary Compression Ignition Internal Combustion Engines

ISU has installed nine emergency generators at the Pocatello campus, seven of which are powered by diesel engines. A list of all engines is provided in Table 10-1 (attached). Generators No. 1-4 were included in previous permitting activity. Generators No. 5-9 were installed since 2006. Equipment specification sheets and Permit to Construct exemption documentation for Generators 5-9 are provided in Appendix B, as are manufacturer certifications for Generators No. 6-9.

40 CFR Part 60, Subpart IIII NSPS: Stationary Compression Ignition Internal Combustion Engines

§ 60.4200 Am I subject to this subpart?

In accordance with § 60.4200(a)(2)(i), the provisions of this subpart are applicable to owners and operators of stationary CI ICE that commence construction after July 11, 2005 where the stationary CI ICE are manufactured after April 1, 2006. At ISU, this includes Generators Nos. 6-9. ISU commenced construction (ordered) Generator No. 5 after July 11, 2005, but the generator's date of manufacture is March 24, 2005. Therefore Generator No. 5 is not subject to subpart IIII.

§ 60.4201 - § 60.4203 What are the emission standards for engine manufacturers?

ISU is not an engine manufacturer.

§ 60.4204 What emission standards must I meet for non-emergency engines if I am an owner or operator of a stationary CI internal combustion engine?

Not applicable since all of ISU's stationary CI ICE are emergency engines.

§ 60.4205 What emission standards must I meet for emergency engines if I am an owner or operator of a stationary CI internal combustion engine?

In accordance with § 60.4205(b), the owners and operator of 2007 model year and later emergency stationary CI ICE with a displacement of less than 30 liters per cylinder must comply with the emission standards in § 60.4202.

In accordance with § 60.4202(a)(2), for stationary CI ICE with a maximum engine power between 37 and 2,237 kW and a displacement of less than 10 liters per cylinder the certification emission standards are those listed in 40 CFR 89.112 and 40 CFR 89.113 for all pollutants beginning in model year 2007.

In accordance with § 89.112, non-road engines with rated power of 130 to 560 kW of model year 2006 and later must meet Tier 3 emission standards and limits (Tables 1 and 2). At ISU, this applies to Generators Nos. 6-8.

In accordance with § 89.112, non-road engines with rated power greater than 560 kW of model year 2006 and later must meet Tier 2 emission standards and limits (Tables 1 and 2). At ISU, this applies to Generator No. 9.

§ 60.4206 How long must I meet the emission standards if I am an owner or operator of a stationary CI internal combustion engine?

The emission standards of § 60.4205 must be met over the entire life of the engine.

§ 60.4207 What fuel requirements must I meet if I am an owner or operator of a CI ICE?

In accordance with § 60.4207(b), all diesel fuel must meet the requirements of 40 CFR 80.510(b).

In accordance with § 80.510(b), the diesel fuel will have a maximum sulfur content of 15 ppm and a minimum cetane index of 40 or a maximum aromatic content of 35 volume percent.

§ 60.4209 What are the monitoring requirements if I am an owner or operator of a CI ICE?

In accordance with § 60.4209(a), each engine that does not meet the standards applicable to non-emergency engines must be equipped with a non-resettable hour meter. All ISU emergency

engines subject to subpart IIII meet the non-emergency emission standards (Tier 2 or Tier 3 certification).

§ 60.4209(b) is not applicable since none of ISU's engines are subject to the emission standards of § 60.4204.

§ 60.4210 What are my compliance requirements if I am a CI ICE manufacturer?

ISU is not an engine manufacturer.

§ 60.4211 What are my compliance requirements if I am an owner or operator of a CI ICE?

In accordance with § 60.4211(a), the engine must be operated and maintained according to the manufacturer's written instructions and only emission-related setting changes that are permitted by the manufacturer are allowed.

In accordance with § 60.4211(c), all emergency engines of 2007 model year and later must be certified to meet the emission standards of § 60.4205(b). All engines must be installed and configured according to the manufacturer's specifications.

In accordance with § 60.4211(f), operation of emergency engines for maintenance checks, readiness testing, emergency demand response or voltage /frequency deviations is limited to 100 hours per year. There is no time limit on the use of emergency engines in emergency situations. The emergency engines may be operated up to 50 hours per year in certain non-emergency situations, but the 50 hours is counted against the 100 hours per year for maintenance testing and emergency demand response.

In accordance with § 60.4211(g), if any engine is not installed, configured, operated and maintained according to the manufacturer's emission-related instructions, compliance must be demonstrated by keeping a maintenance plan and records and by conducting an initial performance test to demonstrate with applicable emission standards. For engines greater than 500 HP, the performance test must be repeated every 3 years or 8760 hours of operation, whichever comes first.

The compliance requirement of (b), (d) and (e) are not applicable to ISU.

§ 60.4212 - § 60.4212 What test methods must I use?

The emergency engines installed at ISU are not subject to emission testing under this subpart.

§ 60.4214 What are my notification, reporting, and recordkeeping requirements if I am an owner or operator of a CI ICE?

In accordance with § 60.4214(b), owners of emergency CI ICE are not required to submit initial notification. None of the ISU emergency engines are subject to the operational recordkeeping of § 60.4214(b) or the diesel particulate filter recordkeeping requirements of § 60.4214(c).

§ 60.4215- § 60.4217 Requirements for specific locations and special fuel use

Not applicable to ISU.

10.2 National Emission Standards for Hazardous Air Pollutants

10.2.1 Subpart ZZZZ: Stationary Reciprocating Internal Combustion Engines

40 CFR Part 63, Subpart ZZZZ NESHAP: Stationary Reciprocating Internal Combustion Engines

§ 63.6580 What is the purpose of subpart ZZZZ?

Subpart ZZZZ establishes operating limitations for hazardous air pollutants (HAP) for area sources that include reciprocating internal combustion engines (RICE). This subpart also establishes how to demonstrate initial and continuous compliance.

§ 63.6585 Am I subject to this subpart?

In accordance with § 63.6585, ISU is subject to this subpart since it owns and operates stationary RICE at an area source of HAP emissions.

In accordance with § 63.6585(f)(3), the existing institutional emergency RICE at ISU are not subject to this subpart.

§ 63.6590 What parts of my plant does this subpart cover?

In accordance with § 63.6590(a)(1)(iii), the stationary RICE located at area sources constructed before 6/12/2006 are considered existing RICE. At ISU, this includes Generators Nos. 1-4. These generators are not subject to this subpart.

In accordance with § 63.6590(a)(2)(iii), the stationary RICE located at area sources constructed on or after 6/12/2006 are considered new RICE. At ISU, this includes Generators Nos. 5-9.

In accordance with § 63.6590(c)(1), new stationary, compression ignition RICE located at an area source of HAP emissions must meet the requirements of this part by meeting the requirements of 40 CFR part 60 subpart IIII. At ISU, this includes Generators Nos. 5-9.

§ 63.6675 What definitions apply to this subpart?

Institutional emergency stationary RICE means an emergency stationary RICE used in institutional establishments such as medical centers, nursing homes, research centers, institutions of higher education, correctional facilities, elementary and secondary schools, libraries, religious establishments, police stations, and fire stations.

10.2.2 Subpart CCCCCC: Gasoline Dispensing Facilities

ISU operates a 5000 gallon gasoline storage tank for refueling university vehicles.

40 CFR Part 63, Subpart CCCCCC NESHAP: Gasoline Dispensing Facilities

§ 63.11110 What is the purpose of this subpart?

In accordance with § 63.11110, subpart CCCCCC establishes national emission standards for hazardous air pollutants (HAP) emitted from the loading of gasoline storage tanks at gasoline dispensing facilities (GDF).

§ 63.11170 Am I subject to the requirements in this subpart?

In accordance with § 63.11170(a), this subpart applies to each GDF that is located at an area source. The affected source includes the cargo tank used during the delivery of product and the storage tank.

In accordance with § 63.11170(b), owners or operators of GDFs with a monthly throughput of less than 10,000 gallons must comply with the requirements of § 63.11116.

In accordance with § 63.11170(e), an affected source shall, upon request by the Administrator, demonstrate that their monthly throughput is less than the 10,000 gallon level. Records required under this paragraph shall be kept for a period of 5 years.

In accordance with § 63.11170(h), monthly throughput is the total volume of gasoline loaded into, or dispensed from , all the gasoline storage tanks located at a single affected GDF. In an area source has more than one GDF, each GDF is treated as a separate affected source.

In accordance with § 63.11170(i), if the affected source's throughput ever exceeds an applicable throughput threshold, the affected source will remain subject to the requirements for sources above the threshold, even if the affected source throughput later falls below the applicable throughput threshold.

§ 63.11112 What parts of my affected source does this subpart cover?

In accordance with § 63.11112(a), this subpart applies to gasoline storage tanks and associated equipment components in vapor or liquid service. The equipment used for the refueling of motor vehicles is not covered by this subpart.

In accordance with § 63.11117(b), an affected source is a new affected source if construction commenced after November 9, 2006. ISU's gasoline tank was constructed before this date and has not been reconstructed; therefore it is an existing source.

§ 63.11113 When do I have to comply with this subpart?

In accordance with § 63.11113(b), if you have an existing affected source, you must comply with the standards in this subpart no later than January 10, 2011.

§ 63.11115 What are my general duties to minimize emissions?

In accordance with § 63.11115(a), each owner or operator must operate and maintain each affected source in a manner consistent with safety and good air pollution control practices for minimizing emissions.

In accordance with § 63.11115(b), each owner or operator must keep applicable records as specified in § 63.11126(a) and § 63.11126(b).

§ 63.11116 Requirements for facilities with monthly throughput <10,000 gallons

In accordance with § 63.11116(a), gasoline must not be handled in a manner that would result in vapor release to the atmosphere for extended periods of time. Measure to be taken include, but are not limited to minimizing gasoline spills, cleaning up spills as soon as possible, and covering all open gasoline containers and gasoline tank fill-pipes with a gasketed seal when not in use.

In accordance with § 63.11116(b), there is no report submission requirement, but records must be available with 24 hours of a request by the Administrator to document your gasoline throughput.

§ 63.11117-§ 63.11124 Requirements, Notifications and Reports

These paragraphs only apply to affected facilities with gasoline throughput of 10,000 gallons per month or more. Therefore, they are not applicable to ISU.

§ 63.11125 What are my recordkeeping requirements?

In accordance with § 63.11125(d), each owner or operator of an affected source shall keep records of the occurrence and duration of each malfunction of operation or the air pollution control equipment. Records of actions taken during periods of malfunction to minimize emissions including corrective actions to restore equipment to its normal or usual manner of operation will also be kept.

§ 63.11126 What are my reporting requirements?

In accordance with § 63.11126(b), each owner or operator of an affected sourced shall report, by March 15 of each year, the number, duration, a brief description of, and corrective action taken for each type of malfunction which occurred during the previous calendar year and which caused or may have caused any applicable emission limitation to be exceeded. No report is necessary for a calendar year in which no malfunctions occurred.

§ 63.11131 Who implements and enforces this subpart?

In accordance with § 63.11131, this subpart can be implemented and enforced by the U.S. EPA or a delegated authority such as the IDEQ. As of July 20, 2012, the EPA had not delegated authority of this subpart in Idaho.

§ 63.11132 What definitions apply to this subpart?

Gasoline dispensing facility (GDF) means any stationary facility which dispenses gasoline into the fuel tank of a motor vehicle, motor vehicle engine, nonroad vehicle, or nonroad engine, including a nonroad vehicle or nonroad engine used solely for competition. These facilities include, but are not limited to, facilities that dispense gasoline into on-and off-road street, or highway motor vehicles, lawn equipment, boats , test engines, landscaping equipment, generators, pumps, and other gasoline-fueled engines and equipment.

Monthly throughput means the total volume of gasoline that is loaded into or dispensed from all gasoline storage tanks at each GDF during a month. Monthly throughput is calculated by summing the volume of gasoline loaded into, or dispensed from, all gasoline storage tanks at

each GDF during the current day, plus the total volume of gasoline loaded into, or dispensed from, all gasoline storage tanks at each GDF during the previous 364 days, and then dividing that sum by 12.

10.2.3 Subpart HHHHHH: Paint Stripping and Misc. Surface Coating Operations

ISU applies paints and coatings in the automotive spray booths that may contain one or more of the target HAPs of chromium, lead, manganese, nickel or cadmium. Therefore, NESHAP Subpart HHHHHH: Paint Stripping and Miscellaneous Surface Coating Operations does apply.

40 CFR Part 63, Subpart HHHHHH NESHAP:	Paint Stripping and Miscellaneous Surface Coating Operations at Area Sources

§ 63.11169 What is the purpose of this subpart?

In accordance with § 63.11169, subpart HHHHHH establishes national emission standards for hazardous air pollutants (HAP) for area sources involved in auto body refinishing operations that encompass motor vehicle and mobile equipment spray-applied surface coating operations.

§ 63.11170 Am I subject to this subpart?

In accordance with § 63.11170(a), this mobile equipment coating operation is subject to this subpart because the facility will be operated as an area source of HAP. The facility is a source of HAP that is not a major source of HAP, is not located at a major source, and is not part of a major source of HAP emissions. In addition, the facility will perform one or more activities listed in this section, including spray application of coatings, as defined in § 63.11180, to mobile equipment including operations that are located in stationary structures at fixed locations.

In accordance with § 63.11170(c), the maintenance shop spray booth is not subject to this subpart since the none of the coatings contain the target HAPs, coatings are generally applied to wood surfaces, and the shop falls under the definition of *Facility maintenance* as defined in § 63.11180.

§ 63.11171 How do I know if my source is considered a new source or an existing source?

In accordance with § 63.11171(b), the mobile equipment coating operation is the collection of mixing equipment; spray booths and associated equipment; spray guns and associated equipment; spray gun cleaning equipment; and equipment used for storage, handling, recovery, or recycling of cleaning solvent or waste paint. Paint stripping is not proposed as an activity.

In accordance with § 63.11171(c), this mobile equipment coating operation is an existing source because it commenced construction prior to September 17, 2007, by installing new surface coating equipment, and the new surface coating equipment will be used at a source that was actively engaged in miscellaneous surface coating prior to September 17, 2007.

§ 63.11172 When do I have to comply with this subpart?

In accordance with § 63.11172(a)(2), because the initial startup of the facility occurred prior to January 9, 2008, the compliance date is January 10, 2011.

§ 63.11173 What are my general requirements for complying with this subpart?

Because the facility has not proposed paint-stripping activities, the requirements of § 63.11173(a) through (d) are not applicable. Because the facility is a mobile equipment coating operation, in accordance with § 63.11173(e), the permittee must meet the requirements of paragraphs (e)(1) through (e)(5) of this section.

In accordance with § 63.11173(e)(1), the students in ISU's training program are not subject to the training and certification requirements of 63.11173 (f) as long as they are under the direct supervision of an instructor who does meet the requirements of 63.11173(f).

In accordance with § 63.11173(f), each owner or operator of an affected mobile equipment coating operation must ensure and certify that all new and existing personnel, including contract personnel, who spray apply surface coatings, as defined in §53.11180, are trained in the proper application of surface coatings as required by paragraph (e)(1) of this section. The training program must include, at a minimum, the items listed in paragraphs (f)(1) through (f)(3) of this section.

In accordance with § 63.11173(g), as required by paragraph (e)(1) of this section, all new and existing personnel at an affected mobile equipment surface coating source, including contract personnel, who spray apply surface coatings, as defined in § 63.11180, must be trained by the dates specified in paragraphs (g)(1) and (2) of this section.

§ 63.11174 What parts of the General Provisions apply to me?

In accordance with § 63.11174(a), Table 1 of this subpart shows which parts of the General Provisions in subpart A apply.

In accordance with § 63.11174(b), an owner or operator of an area source subject to this subpart is exempt from the obligation to obtain a permit under 40 CFR part 70 or 71 provided

that a permit under 40 CFR 70.3(a) or 71.3(a) is not required for a reason other than becoming an area source subject to this subpart. This permit application and permitting action involve a Permit to Construct, and will not utilize the requirements and procedures in IDAPA 58.01.01.300-399 for the issuance of Tier I operating permits.

§ 63.11175 What notifications must I submit?

In accordance with § 63.11175(a), because the facility is a surface coating operation subject to this subpart, the initial notification required by § 63.9(b) must be submitted. For this existing operation, the Initial Notification must be submitted no later than on or before March 11, 2011.

In accordance with § 63.11175(b), because the facility is an existing source, the permittee is not required to submit a separate notification of compliance status in addition to the initial notification specified in paragraph (a) of this subpart provided the permittee was able to certify compliance on the date of the initial notification, as part of the initial notification, and the permittee's compliance status has not since changed. The permittee is required to submit the information specified in paragraphs (b)(1) through (4) of this section with the Notification of Compliance Status.

§ 63.11176 What reports must I submit?

In accordance with § 63.11176(a), because the permittee is an owner of operator of a mobile equipment surface coating affected source, the permittee is required to submit a report in each calendar year in which information previously submitted in either the initial notification required by § 63.11175(a), Notification of Compliance, or a previous annual notification of changes report submitted under this paragraph, has changed. Deviations from the relevant requirements in § 63.11173(a) through (d) or § 63.11173(e) through (g) on the date of the report will be deemed to be a change. The annual notification of changes report must be submitted prior to March 1 of each calendar year when reportable changes have occurred and must include the information specified in paragraphs (a)(1) through (2) of this section.

Because the facility has not proposed to conduct paint stripping operations, the MeCl minimization plan requirements are not applicable.

§ 63.11177 What records must I keep?

In accordance with § 63.11177, because the permittee is the owner or operator of a surface coating operation, the permittee must keep the records specified in paragraphs (a) through (d) and (g) of this section. Because the permittee has not proposed to conduct paint stripping operations, the requirements of paragraphs (e) and (f) of this section are not applicable.

(a) Certification that each painter has completed the training specified in § 63.11173 (f) with the date of initial training and most recent refresher.
(b) Booth exhaust filter efficiency documentation.
(c) Spray gun HVLP-equivalent transfer efficiency documentation.
(d) Copies of any notifications submitted as required by § 63.11175 and copies of any report submitted as required by § 63.11176.

§ 63.11178 In what form and for how long must I keep my records?

In accordance with 40 CFR 63.11178(a) because the permittee is the owner or operator of an affected source, the permittee must maintain copies of the records specified in § 63.11177 for a period of at least five years after the date of each record. Copies of records must be kept on site and in a printed or electronic form that is readily accessible for inspection for at least the first two years after their date, and may be kept off-site after that two-year period.

§ 63.11179 Who implements and enforces this subpart?

In accordance with § 63.11179(a), this subpart can be implemented and enforced by the U.S. Environmental Protection Agency (EPA), or a delegated authority. At the time of this permitting action, the EPA has not delegated authority to the State of Idaho. However, IDAPA 58.01.01.107.03i incorporates by reference all Federal Clean Air Act requirements including 40 CFR 63, Subpart HHHHHH. Therefore, the requirements of this subpart have been placed in the permit.

§ 63.11180 What definitions do I need to know?

Terms used in this subpart are defined in accordance with § 63.11180

Facility maintenance means surface coating performed as part of the routine repair or renovation of the tools, equipment, machinery, and structures that comprise the infrastructure of the affected facility and that are necessary for the facility to function in its intended capacity. *Facility maintenance* also includes surface coating associated with the installation of new equipment or structures.

10.2.4 Subpart JJJJJJ: Industrial, Commercial and Institutional Boilers at Area Sources

40 CFR 63, Subpart JJJJJJ	National Emission Standards for Hazardous Air Pollutants for Industrial, Commercial and Institutional Boilers and Process Heaters- Area Sources

40 CFR 63.11193 .....Am I subject to this subpart?

The requirements of this subpart do not apply to this facility because the facility is an area source that owns or operates boilers that meet the excluded definitions in 63.11195.

40 CFR 63.11195 .....Are any boilers not subject to this subpart?

The boilers at ISU fall under a category included in this section and, therefore, are not subject to this subpart and to any requirements in this subpart.

(e) A gas-fired boiler as defined in this subpart.
(f) A hot water heater as defined in this subpart

40 CFR 63.11237 .....What definitions apply to this subpart?

Gas-fired boiler includes any boiler that burns gaseous fuels not combined with any solid fuels, burns liquid fuel only during periods of gas curtailment, gas supply interruption, startups, or periodic testing on liquid fuel. Periodic testing of liquid fuel shall not exceed a combined total of 48 hours during any calendar year.

Hot water heater means a closed vessel with a capacity of no more than 120 U.S. gallons in which water is heated by combustion of gaseous, liquid, or biomass fuel and hot water is withdrawn for use external to the vessel. Hot water boilers (i.e., not generating steam) combusting gaseous, liquid, or biomass fuel with a heat input capacity of less than 1.6 million Btu per hour are included in this definition. The 120 U.S. Gallon capacity threshold to be considered a hot water heater is independent of the 1.6 MMBtu/hr heat input capacity threshold for hot water boilers. Hot water heater also means a tankless unit that provides on-demand hot water.

All of the boilers at ISU are included in the definitions above. All units are fired with natural gas. Boiler No. 4 has the ability to fire diesel fuel, but this option will only be used in an emergency situation if the natural gas supply is disrupted. Any operational testing ISU does with Boiler No. 4 operating with diesel fuel will be limited to less than 48 hours during any calendar year.

10.3 Prevention of Significant Deterioration

ISU's operations are not included in the list of 28 Prevention of Significant Deterioration (PSD) source categories. The total duty of all fossil-fuel fired steam-generating units is 181 MMBtu/hr below the 250 MMBtu/hr threshold. Therefore, to qualify as a PSD Major Source, the ISU facility must have the Potential to Emit (PTE) greater than 250 tons per year of any NSR regulated pollutant. The combined uncontrolled PTE of equipment at ISU is 159 tons/year (see Table 7-3).

Table 10-1: Emergency Generators Equipment List

Emergency Generator		No. 1	No. 2	No. 3	No. 4	No. 5	No. 6	No. 7	No. 8	No. 9
Location		Bldg. 60	Bldg. 3	Bldg. 27	Bldg. 88	Bldg. 38	Bldg. 50	Bldg. 8	Bldg. 65	Bldg. 5
Manufacturer		Generac	Spectrum	Generac	Kohler	Generac	Generac	Generac	Generac	Generac
Model		2000	400DS60	6.8GN	60REOZJB	SC400	SD135	SD135	SD135	SD600
Manufactured Date		N/A	N/A	N/A	N/A	3/24/2005	6/3/2008	5/26/2008	6/3/2008	10/22/2008
Construction Date[1]		Before 6/12/2006				5/30/2007	7/14/2008	8/12/2008	8/13/2008	11/25/2008
Order Date						5/30/2007	7/14/2008	8/12/2008	8/13/2008	11/25/2008
RICE Subpart		ZZZZ	ZZZZ	ZZZZ	ZZZZ	not covered	IIII	IIII	IIII	IIII
Startup Date						October-07	July-09			
Rated Generator Power (kWe)						400	135	135	135	600
Rated Engine Power	MMBtu/hr	0.539	1.38	0.884	4.154					
	bhp					600	197	197	197	954
Fuel		natural gas	diesel	natural gas	diesel	diesel	diesel	diesel	diesel	diesel
Cylinder Displacement (L/cylinder)						2.17	1.13	1.13	1.13	1.83
Max Annual Operation (hr/yr)		500	500	500	500	500	100	100	100	100
EPA Certification		None	None	None	None	None	Tier 3	Tier 3	Tier 3	Tier 2

Note 1: Consistent with Subpart IIII, the date of construction for Generators Nos. 5-9 is the date the new engine was ordered from the manufacturer.

THIS PAGE INTENTIONALLY LEFT BLANK FOR TWO-SIDED PRINTING

11. STATE OF IDAHO REGULATORY REVIEW

11.1 Certification of Documents- 58.01.01.123

Certification of the application documents is provided in on Form GI.

11.2 Demonstration of Preconstruction Compliance with Toxic Standards- 58.01.01.210

Emissions estimates for the potential Toxic Air Pollutants (TAPs) emitted from the new and modified sources are summarized in Table 7-1. The TAP emission rates are compared to the IDAPA 58.01.01.585-586 screening emission levels. Four TAPS –arsenic, benzene, cadmium and formaldehyde – have facility-wide emissions in excess of their respective screening levels.

Per IDAPA 58.01.01 Sections 06 and 08, air dispersion modeling is used to determine the ambient air concentrations of these four TAPs (see Section 9 of this report). The modeling results are provided in Table 9-1. For arsenic, benzene, cadmium and formaldehyde, the ambient concentrations are below their respective acceptable ambient concentrations for carcinogens.

11.3 Ambient Air Quality Standards for Specific Air Pollutants- 58.01.01.577

Uncontrolled and controlled emissions estimates for the potential criteria pollutants emitted from the modified sources are calculated in EI1 and EI2. The increases in potential criteria pollutant emissions associated with this modification do not exceed IDEQ's Modeling Thresholds. Therefore, it is assumed that ambient concentrations of particulate matter, sulfur oxides, nitrogen dioxide, carbon monoxide, fluorides, and lead are below the ambient air quality standards specified in 58.01.01.577.

11.4 Toxic Air Pollutants Non-carcinogenic Increments – 58.01.01.585

See Section 11.2.

11.5 Toxic Air Pollutants Carcinogenic Increments – 58.01.01.586

See Section 11.2.

11.6 New Source Performance Standards – 58.01.01.590

See Section 10.1

11.7 National Emission Standards for Hazardous Air Pollutants – 58.01.01.591

See Section 10.2

11.8 Visible Emissions – 58.01.01.625

The facility is subject to this standard and will comply. There are no anticipated sources of visible

emissions.

11.9 Rules for the Control of Fugitive Dust – 58.01.01.650

The facility has no known sources of fugitive dust. Most particulate-generating activities occur indoors so that all emissions will be released through the stacks. The campus is extensively landscaped with few unpaved roads. Street sweepers are used to remove dust and sand from paved roadways. There is minimal loading, unloading, or transport of unpackaged, dusty material.

11.10 Fuel Burning Equipment – Particulate Matter – 58.01.01.675

IDAPA 58.01.01.675 establishes exhaust gas particulate limits for fuel burning equipment, most of which is existing equipment. It is assumed that compliance with this statute was determined in previous permitting actions.

11.11 Standards for New Sources – 58.01.01.676

See Section 9.10. IDAPA 58.01.01.676

11.12 Particulate Matter – Process Weight Limitations – 58.01.01.700

For the new sources at ISU, non-fuel burning particulate at the ISU facility is contributed by the coatings applied and the wood cut and sanded. The total weight of coatings can be estimated using the proposed permit limit of 500-1000 gallons of coating per booth per year.

2500 gallons per year * 10 lb/gal average density = 25,000 lb coatings/year.
Process Weight, PW = 25,000 lb/yr ÷ 200 op. days/yr ÷ 24 hrs/day = 5.21 lb/hr

Note that 200 operating days per year are used since the proposed coating limits are 5 gallons per day and 1000 gallons per year per booth. 24 hours per day are used as the PW basis so that the PW basis is the same as the particulate matter calculation basis.

Per IDAPA 58.01.01.701.01.b:

Allowable Particulate Emissions, $E = 0.045(PW)^{0.60} = 0.045*(5.21)^{0.60} = 0.121$ lb/hr particulate

The estimated combined 24-hr averaged particulate rate (all particulate assumed to be $PM_{2.5}$) is 0.025 lb/hr from the paint booths and shop bag house (see Permit Form EI2, Table EI2.2). Therefore the facility meets the standards of IDAPA 58.01.01.701.

11.13 Rules for Sulfur Content of Fuels

IDAPA 58.01.01725 establishes maximum allowable sulfur content of distillate and residual fuel oils. The maximum allowable sulfur content of ASTM Grade 2 distillate fuel is 0.5 wt%.

APPENDIX A: EMISSION CALCULATIONS

Diesel Tank Emissions
Gasoline Tank Emissions
Stack Exhaust Velocity Calculations

THIS PAGE INTENTIONALLY LEFT BLANK FOR TWO-SIDED PRINTING

Diesel Storage Tank Emissions

Capacity	Annual Thruput	Overall Emission Rate[1]		Component	Liquid[2]	Vapor[1]	Emissions		Screening EL
gal	gal/yr	lb/hr	ton/yr	Component	wt%	wt%	lbs/hr	tons/yr	lbs/hr
5000	80000	0.002	0.0012	Naphthalene	0.5%	100%	0.0024	0.0012	3.33
				Toluene	0.5%	100%	0.0024	0.0012	25
				VOC	100%	100%	0.0024	0.0012	29

Notes:
1. Conservatively assume to be 100%
2. Concentrations from Sinclair Diesel MSDS

Aboveground Storage Tank Emissions Using the AP-42 Method

Tank capacity = 5000 gal = 668.4 ft^3
Fuel RVP (avg) = <1 psi

L_T = Standing Losses + Working Losses = $L_S + L_W$
$L_S = nV_VW_VK_EK_S$

n = days in the year = 365
V_V = vapor space volume of the ullage
W_V = vapor density
K_E = vapor space expansion factor
K_S = vented vapor saturation factor

V_V

V_V = 1/2 tank capacity = 334.2 ft^3

W_V

$W_V = M_VP_{VA} / RT_{LA}$
M_V = molecular weight of vapor (see Table 3.2 for fuel type) = 130 lb/lb-mol
P_{VA} = total vapor pressure of liquid mixture (see Table 3-2) = 0.0045 psia
R = ideal gas constant = 10.731 psia-ft^3/lb mole-R

T_{LA} = daily average surface temperature = $(T_{LN} + T_{LX})/2$
T_{LN} = daily minimum liquid surface temperture, R = $[T_{amb.avg} + 460] - [(1 - \text{Attenuation factor}) * (T_{amb.range}/2)]$
T_{LX} = daily maximum liquid surface temperature, R = $[T_{amb.avg} + 460] + [(1 - \text{Attenuation factor}) * (T_{amb.range}/2)]$

$T_{amb.avg}$ = daily ambient average temperature (F): from TANKS 4.0 for location
$T_{amb.range}$ = daily ambient temperature range (F); from TANKS 4.0 for location
Location = Pocatello $T_{amb.avg}$ = 50 F $T_{amb.range}$ = 20 F

Attentuation Factor = adjustment to gasoline surface temperature dependent on tank type
AF for single-walled (non-insulated) ASTs = 0.17
AF for protected (insulated) ASTs = 0.8
AF for project = 0.8 Tank description: Double-walled tank; concrete outer

T_{LN} = 508 R
T_{LX} = 512 R
T_{LA} = 510 R
W_V = 0.00011 lb/ft^3

K_E

$K_E = [(\Delta T_V/T_{LA})] + [(\Delta P_V - \Delta P_B) /(14.7 - P_{VA})]$
ΔT_V = daily vapor temperature range = $T_{LX} - T_{LN}$ = 4 R
ΔP_V = daily vapor pressure range = $P_{VX} - P_{VN}$

From Figure 3 A = 13 (based on RVP)
From Figure 3 B = 7500 (based on RVP)

P_{VX} = vapor pressure P_{VA} at daily maximum liquid surface temperature = exp[A - (B/T_{LX})] = 0.19 psi
P_{VN} = vapor pressure P_{VA} at daily minimum liquid surface temperature = exp[A - (B/T_{LN})] 0.17 psi
ΔP_V = 0.021 psi

ΔP_B = breather vent range = $P_{BP} - P_{BN}$
P_{BP} = breather vent pressure setting (psi) = 14.7 psi (not installed at ISU)
P_{BV} = breather vent vacuum setting (psi) = 14.7 psi
ΔP_B = 0.00 psi
K_E = 0.0020

Diesel Storage Tank Emissions

K_S

$K_S = 1 / [1 + (0.053 * P_{VA} * H_{VO})]$

H_{VO} = vapor space outage = 0.5 * Height of tank

Height of tank = 8.82 ft

H_{VO} = 4.4116 ft

K_S = 0.999

L_S

L_S = 0.026 lb/year

L_S = 2.9E-06 lb/hour (average)

L_W

L_W = working loss due to deliveries into AST + working loss due to dispenses from AST = $L_{W\ (Deliveries)} + L_{W\ (Dispenses)}$

$L_{W\ (Delivered)} = L_{W\ (Dispensed)} = (V_{\ (Delivered)} * W_V)$

V (Delivered) = volume of fuel delivered to AST = 70% of volu 534.8 ft^3

$L_{W\ (Delivered)}$ = 0.06 lb/delivery = $L_{W\ (Dispensed)}$

Number of Deliveries per year = 20

L_W = 2.3 lb/year

L_T

L_T = **2.3** **lb/yr VOCs**

L_T = 0.00026 lb/hr $_{Average}$

L_T = 0.0024 lb/hr $_{Maximum}$ (delivery days)

Emissions of individual HAPs and TAPs will not be significant- not calculated.

MATERIAL SAFETY DATA SHEET

MSDS # F2

SINCLAIR DIESEL

1. CHEMICAL PRODUCT AND COMPANY IDENTIFICATION

TRADE NAME: **Diesel**

APPLICATIONS: Diesel – Dyed Fuel

SYNONYMS: No. 2 Diesel Fuel, Ultra Low Sulfur Diesel - Dyed and Undyed, Oil Distillate, Cycle Oil, Fuel Oil, Diesels Cycle Oil, Furnace Oil

CAS REGISTRY #: #1 Diesel 8008-20-6
#2 Diesel 68476-34-6

CHEMICAL FAMILY: Liquid Hydrocarbons

EMERGENCY PHONE: CHEMTREC – (800) 424-9300 or (703) 527-3887 (collect)

SUPPLIER: Sinclair Oil Corporation
P.O. Box 30825
Salt Lake City, Utah 84130

TELEPHONE / FAX: (888) 340-3466 / (801) 524-2740

2. COMPOSITION, INFORMATION ON INGREDIENTS

COMPONENTS:	CAS#	Typical wt.%
#1 Diesel	8008-20-6	100
Toluene	108-88-3	0 – 0.5
Naphthalene	91-20-3	0 – 0.5
#2 Diesel	68476-34-6	100
Toluene	108-88-3	0 – 0.5
Naphthalene	91-20-3	0 – 0.5

3. HAZARDS IDENTIFICATION

APPEARANCE: Colorless, red, blue, amber

PHYSICAL STATE: Liquid

ODOR: Kerosene odor

EMERGENCY OVERVIEW: May cause eye, skin and respiratory tract irritation. Combustible liquid and vapor. Harmful or fatal if swallowed. Toxic to aquatic organisms.

POTENTIAL HEALTH EFFECTS: Trauma and burns secondary to explosions and fires can result. In enclosed spaces, oxygen may be displaced by vapors or consumed by combustion. Incomplete combustion will produce carbon monoxide and other toxic gases.

INHALATION: Overexposure may cause weakness, headache, nausea, confusion, blurred vision, drowsiness and other central nervous system effects.

EYE CONTACT: Contact may cause eye irritation. Naphthalene vapor causes eye irritation.

SKIN CONTACT: Contact may irritate or burn skin. Absorption through the skin may cause symptoms of intoxication, followed by kidney damage.

INGESTION: Contact may irritate or burn skin. Absorption through the skin may cause symptoms of intoxication, followed by kidney damage.

4. FIRST AID MEASURES

GENERAL: Remove all clothing impregnated with material immediately. Consult a physician for major exposures of inhalation or skin contact.

INHALATION: Remove from further exposure. If unconsciousness occurs, seek immediate medical assistance. If breathing stops, use mouth-to-mouth resuscitation.

EYE CONTACT: Flush immediately with water for at least 15 minutes. Seek medical attention promptly.

SKIN CONTACT: Discard contaminated leather articles. Wash contact areas with soap and water. Launder contaminated clothing before reuse.

INGESTION: **DO NOT INDUCE VOMITING.** Get medical assistance promptly. (Note to Physician: Material, if aspirated into lungs, may cause chemical pneumonitis. Treat appropriately.)

5. FIRE FIGHTING MEASURES

FLASH POINT (°F): 100°F Minimum

FLAMMABLE LIMITS: LEL – 1.3 UEL – 6.0

AUTOIGNITION TEMPERATURE: 490°F - 545°F

FLAMMABILTY CLASSIFICATION: Combustible Liquid

GENERAL HAZARD: Incomplete burning can produce carbon monoxide. Vapors will be released above flash point and when mixed with air, can burn or explode in confined space if exposed to sources of ignition.

FIRE FIGHTING INSTRUCTIONS: Use foam, dry chemical, CO_2, water fog or vaporizing liquid (Halon). Keep personnel removed from and up-wind of fire. Cool adjacent structures and storage drums with water spray. Evacuate area. Prevent runoff from fire control dilution from entering streams or drinking water supply.

FIRE FIGHTING EQUIPMENT: Use of SCBA in enclosed or confined spaces, or as otherwise needed. Bunker gear.

HAZARDOUS COMBUSTION PRODUCTS: May produce carbon monoxide.

6. ACCIDENTAL RELEASE MEASURES

LAND SPILL: Shut off and eliminate all ignition sources. Keep people away. Remove leaking containers to a safe area. Contain and remove by mechanical means. Add sand, earth or other suitable absorbent to spill area than scrape off the ground. Guard against contamination of water supplies. Report spills to appropriate authorities. Dispose of in accordance with Federal, State and Local regulations.

WATER SPILL: Spill may be removed from water with mechanical dredges or lifts. Report spills to appropriate authorities. Dispose of in accordance with Federal, State and Local regulations.

7. HANDLING AND STORAGE

HANDLING / STORAGE: Ground and bond all transfer and storage equipment. Drums must be grounded/ bonded/ equipped with self- closing valves, pressure vacuum bungs and flame arrestors. Store away from ignition sources in a cool area. Outside or detached storage is preferred.

When handling use non-sparking tools and equipment. Do not use as a cleaner or solvent, use only as fuel. Do not siphon by mouth.

8. EXPOSURE CONTROLS, RESPIRATORY & PERSONAL PROTECTION

ENGINEERING CONTROLS: Provide ventilation sufficient to prevent exceeding recommended exposure limit or build-up of explosive concentrations of vapor in air. Use explosion-proof equipment.

PERSONAL PROTECTION: If contact is likely the following protective clothing and equipment is recommended.

PROTECTIVE CLOTHING: Use full-face shield, chemical goggles, impervious gloves, boots and whole body protection.

RESPIRATOR: Approved respiratory protection must be used when vapors or mist concentrations are unknown or exceed the TLV. Avoid prolonged or repeated breathing of vapor or mists.

OCUPATIONAL EXPOSURE LIMITS

COMPONENT	*LIMIT*	*TWA*	*STEL*	*CEILING*	*NOTATION*	*OTHER*
Diesel	ACGIH_TLV	100mg/M^3			A3	Skin, Irritation
Toluene	OSHA_PEL	200ppm		300ppm		
Toluene	ACGIH_TLV	50ppm			A4	Skin, CNS
Naphthalene	OSHA_PEL	10ppm				
Naphthalene	ACGIH_TLV	10ppm	15ppm		A4	Skin
Petroleum Distillates (Naphtha)	OSHA_PEL	500ppm				

A3= Confirmed Animal Carcinogen with Unknown Relevance to Humans
A4= Not Classified as a Human Carcinogen
CNS= Central Nervous System
Skin= Absorption through the skin may contribute to overall exposure

9. PHYSICAL AND CHEMICAL PROPERTIES

APPEARANCE/PHYSICAL STATE: Liquid

COLOR: colorless, red, blue, or amber

DENSITY/SPECIFIC GRAVITY (g/ml): 0.75 – 0.90

VAPOR DENSITY (air=1): >1

VAPOR PRESSURE: <1 PSIA

BOILING POINT/RANGE: 550°F

SOLUBILITY IN WATER: No

VISCOSITY: N/A/F

pH : N/A

FREEZING POINT: 0°F

10. STABILITY AND REACTIVITY

GENERAL: This product is stable

INCOMPATIBLE MATERIALS AND CONDITIONS TO AVOID: Strong acids, alkalies and oxidizers. Avoid heat, sparks, flame and static electricity.

HAZARDOUS DECOMPOSITION: Incomplete burning can produce carbon monoxide.

Gasoline Storage Tank Emissions

Capacity	Annual Thruput	Overall Emission Rate[1]		Component Composition	Liquid[2] wt%	Vapor[1] wt%	Emissions		Screening EL
gal	gal/yr	lb/hr_{MAX}	ton/yr				lbs/hr^3	tons/yr	lbs/hr
5000	80000	1.14	0.58	Benzene	3.0%	0.9%	1.25E-03	0.0055	8.0E-04
				Ethyl alcohol	10%	1.5%	0.017	0.0085	125
				Toluene	10%	0.8%	0.009	0.0045	25
				VOC	100%	100%	1.138	0.583	--

Notes:
1. Calculated below.
2. Concentrations from Sinclair Gasoline MSDS
3. Benzene hourly emissions are on an annual basis. All other hourly emissions are on a 24-hr basis.

Aboveground Storage Tank Emissions Using the AP-42 Method

Tank capacity = 5000 gal = 668.4 ft^3
Fuel RVP (avg) = 10 psi (from MSDS)

L_T = Standing Losses + Working Losses = $L_S + L_W$

$L_S = nV_VW_VK_EK_S$

n = days in the year = 365
V_V = vapor space volume of the ullage
W_V = vapor density
K_E = vapor space expansion factor
K_S = vented vapor saturation factor

V_V

V_V = 1/2 tank capacity = 334.2 ft^3

W_V

$W_V = M_VP_{VA} / RT_{LA}$

M_V = molecular weight of vapor (see Table 3.2 for fuel RVP) = 65 lb/lb-mol
P_{VA} = total vapor pressure of liquid mixture (see Table 3-2) = 4.2 psia
R = ideal gas constant = 10.731 psia-ft^3/lb mole-R

T_{LA} = daily average surface temperature = $(T_{LN} + T_{LX})/2$
T_{LN} = daily minimum liquid surface temperture, R = $[T_{amb.avg} + 460] - [(1 - \text{Attenuation factor}) * (T_{amb.range}/2)]$
T_{LX} = daily maximum liquid surface temperature, R = $[T_{amb.avg} + 460] + [(1 - \text{Attenuation factor}) * (T_{amb.range}/2)]$

$T_{amb.avg}$ = daily ambient average temperature (F): from TANKS 4.0 for location
$T_{amb.range}$ = daily ambient temperature range (F); from TANKS 4.0 for location
Location = Pocatello $T_{amb.avg}$ = 50 F $T_{amb.range}$ = 20 F

Attentuation Factor = adjustment to gasoline surface temperature dependent on tank type
AF for single-walled (non-insulated) ASTs = 0.17
AF for protected (insulated) ASTs = 0.8
AF for project = 0.8 Tank description: Double-walled tank; concrete outer

T_{LN} = 508 R
T_{LX} = 512 R
T_{LA} = 510 R
W_V = 0.0507 lb/ft^3

K_E

$K_E = [(\Delta T_V/T_{LA})] + [(\Delta P_V - \Delta P_B) /(14.7 - P_{VA})]$
ΔT_V = daily vapor temperature range = $T_{LX} - T_{LN}$ = 4 R
ΔP_V = daily vapor pressure range = $P_{VX} - P_{VN}$

From Figure 3-3: A = 11.6 (based on RVP)
From Figure 3-4: B = 5300 (based on RVP)

P_{VX} = vapor pressure P_{VA} at daily maximum liquid surface temperature = $\exp[A - (B/T_{LX})]$ = 3.48 psi
P_{VN} = vapor pressure P_{VA} at daily minimum liquid surface temperature = $\exp[A - (B/T_{LN})]$ 3.21 psi
ΔP_V = 0.27 psi

ΔP_B = breather vent range = $P_{BP} - P_{BN}$
P_{BP} = breather vent pressure setting (psi) = 14.7 psi (not installed at ISU)
P_{BV} = breather vent vacuum setting (psi) = 14.7 psi
ΔP_B = 0.00 psi
K_E = 0.0267

K_S

$K_S = 1 / [1 + (0.053 * P_{VA} * H_{VO})]$

H_{VO} = vapor space outage = 0.5 * Height of tank

Height of tank = 8.82 ft

H_{VO} = 4.4116 ft

K_S = 0.505

L_S

L_S = 83.3 lb/year

L_S = 0.0095 lb/hour (average)

L_W

L_W = working loss due to deliveries into AST + working loss due to dispenses from AST = $L_{W\ (Deliveries)} + L_{W\ (Dispenses)}$

$L_{W\ (Delivered)} = L_{W\ (Dispensed)} = (V_{(Delivered)} * W_V)$

$V_{(Delivered)}$ = volume of fuel delivered to AST = 80% of volume : 534.8 ft^3

$L_{W\ (Delivered)}$ = 27.1 lb/delivery = $L_{W\ (Dispensed)}$

Number of Deliveries per year = 20

L_W = 1083.4 lb/year

L_T

L_T = 1166.7 lb/yr VOCs

L_T = 0.133 lb/hr $_{Average}$

L_T = 1.14 lb/hr $_{Maximum}$ (delivery days)

In order to calculate individual pollutant emissions, the vapor weight fraction must be determined

L_{Ti} = emission rate of component I, lb/yr = $(Z_{Vi})(L_T)$

Z_{Vi} = weight fraction of component I in the vapor, lb/lb = $(y_i)(M_i) / (M_V)$

y_i = vapor mole fraction of component i

M_i = molecular weight of component i

M_V = molecular weight of vapor stock = 66 (determined above)

$y_i = (P_{Vi})(x_i) / (P_{VA})$

P_{Vi} = vapor pressure of pure I at the daily average liquid suface temperature, psia (Table 3-3 and Perry's Table 3-8))

x_i = liquid mole fraction of component i

P_{VA} = total vapor pressure of liquid mixture, psia = 4.20 (determined above)

$x_i = (Z_{Li})(M_L) / (M_i)$

Z_{Li} = weight fraction of component I in the liquid, lb/lb

M_L = molecular weight of gasoline = 100 (typical gasoline MW)

M_i = molecular weight of component i

L_{Ti}

Component i	Z_{Li} lb/lb^2	M_i lb/lb mol	x_i mol/mol	P_{Vi} psia @50F	y_i mol/mol	Z_{Vi} lb/lb	L_{Ti} lb/yr	
Benzene	0.030	78	0.038	0.870	0.008	0.009	10.99	
Ethyl alcohol	0.100	46	0.217	0.406	0.021	0.015	17.09	
Naphthalene	0.002	128	0.002	0.002	7.4E-07	1.4E-06	0.002	Not significant
Trimethylbenzene	0.070	120	0.058	0.002	2.8E-05	5.1E-05	0.06	Not significant
Toluene	0.100	92	0.109	0.213	0.006	0.008	8.97	
Xylene	0.065	106.00	0.061	0.004	5.8E-05	9.4E-05	0.11	Not significant

MATERIAL SAFETY DATA SHEET

MSDS # F1

SINCLAIR GASOLINE

1. CHEMICAL PRODUCT AND COMPANY IDENTIFICATION

TRADE NAME: **Gasoline**

APPLICATIONS: Automotive Gasoline

SYNONYMS: Regular, Premium, Subgrade, Motor Fuel, Gasohol

CAS REGISTRY #: 8006-61-9

CHEMICAL FAMILY: Liquid Hydrocarbon

EMERGENCY PHONE: CHEMTREC – (800) 424-9300 or (703) 527-3887 (collect)

SUPPLIER: Sinclair Oil Corporation
P.O. Box 30825
Salt Lake City, Utah 84130

TELEPHONE / FAX: (888) 340-3466 / (801) 524-2740

2. COMPOSITION, INFORMATION ON INGREDIENTS

COMPONENTS:	CAS#	Typical wt.%
Regular Unleaded Gasoline including:	8006-61-9	100.0
Cyclohexane	110-82-7	0.5
Benzene	71-43-2	3.0
Toluene	108-88-3	10.0
Xylene	1330-20-7	6.5
Trimethyl Benzene	25551-13-7	7.0
Napthalene	91-20-3	0.2
Ethyl Alcohol	64-17-5	10.0
Premium Unleaded Gasoline including:	8006-61-9	100.0
Cyclohexane	110-82-7	0.2
Benzene	71-43-2	4.0
Toluene	108-88-3	13.7
Xylene	1330-20-7	12.7
Trimethyl Benzene	25551-13-7	11.9
Napthalene	91-20-3	0.3
Ethyl Alcohol	64-17-5	10.0

Gasoline consists of a complex blend of paraffinic, olefinic, napthenic, and aromatic hydrocarbons which may contain up to 5% benzene and dosages of multi-functional additives. May contain 0-10% ethanol.

3. HAZARDS IDENTIFICATION

APPEARANCE: Clear, bronze, red, yellow, or purple color

PHYSICAL STATE: Liquid / Vapor

ODOR: Strong hydrocarbon odor

EMERGENCY OVERVIEW: Extremely flammable liquid and vapor. Vapors may cause flash fire. Harmful or fatal if swallowed and may cause lung damage if aspirated. Causes skin and eye irritation. Long term exposure may have caused cancer in laboratory animals. Keep away from children. Toxic to aquatic organisms.

POTENTIAL HEALTH EFFECTS: Trauma and burns secondary to explosions and fires can result. In enclosed spaces, oxygen may be displaced by vapors or consumed by combustion. Incomplete combustion will produce carbon monoxide and other toxic gases.

INHALATION: High vapor concentrations are possible and can be hazardous on single exposure. Overexposure may cause weakness, headache, nausea, confusion, blurred vision, drowsiness and other central nervous system effects. Extremely high-level exposure may result in dizziness, irregular heartbeat, coma, collapse and death.

EYE CONTACT: May cause eye irritation.

SKIN CONTACT: Contact may irritate or burn skin. Repeated contact may cause skin to become dry & scaly.

INGESTION: If aspirated (liquid enters lung) following ingestion, severe lung irritation and pulmonary edema (swelling of lung tissue) may occur. Aspiration may also result in central nervous system depression or excitement. Serious, permanent lung damage may result. Nausea, vomiting, diarrhea, or abdominal pain may occur following ingestion.

CARCINOGENICITY: Gasoline mixtures are not listed as carcinogenic by NTP, OSHA and, ACGIH. Gasoline mixtures are listed as a possible carcinogen by IARC (2B) and NIOSH. Benzene is listed as a confirmed human carcinogen by IARC, NTP, OSHA, NIOSH and, ACGIH.

4. FIRST AID MEASURES

INHALATION: Remove from further exposure. If unconsciousness occurs, seek immediate medical assistance. If breathing stops, use mouth-to-mouth resuscitation.

EYE CONTACT: Flush immediately with water for at least 15 minutes. Seek medical attention promptly.

SKIN CONTACT: Discard contaminated leather articles. Wash contact areas with soap and water. Launder contaminated clothing before reuse.

INGESTION: **DO NOT INDUCE VOMITING.** Get medical assistance promptly. (Note to Physician: Material, if aspirated into lungs, may cause chemical pneumonitis. Treat appropriately.)

5. FIRE FIGHTING MEASURES

FLASH POINT (°F): -45° F

FLAMMABLE LIMITS: LEL – 1.4% UEL – 7.6%

AUTOIGNITION TEMPERATURE: 530°F+

FLAMMABILTY CLASSIFICATION: Flammable Liquid

GENERAL HAZARD: Incomplete burning can produce carbon monoxide. This is an extremely flammable liquid; vapor accumulation could flash and/or explode if it comes into contact with open flame.

FIRE FIGHTING INSTRUCTIONS: Use CO_2, foam, dry chemical, Halon, or water fog. Keep personnel removed from and up-wind of fire. Cool adjacent structures and storage drums with water spray. Evacuate area. Prevent runoff from fire control dilution from entering streams or drinking water supply. A vapor suppressing foam may be used to reduce vapors.

FIRE FIGHTING EQUIPMENT: Fire fighters should use SCBA and full protective equipment (Bunker gear).
HAZARDOUS COMBUSTION PRODUCTS: May produce carbon monoxide.

6. ACCIDENTAL RELEASE MEASURES

LAND SPILL: Treat spill as an oil spill. Eliminate all sources of ignition. Remove leaking containers to a safe area. Contain and remove by mechanical means. Guard against contamination of water supplies. Report spills to appropriate authorities. Dispose of in accordance with Federal, State, and Local regulations.

WATER SPILL: Treat spill as an oil spill. Report spills to appropriate authorities. Dispose of in accordance with Federal, State, and Local regulations.

7. HANDLING AND STORAGE

HANDLING / STORAGE: Ground and bond all transfer and storage equipment. Drums must be grounded / bonded / equipped with self-closing valves, pressure vacuum bungs and flame arrestors. Store away from ignition sources in a cool area. Outside or detached storage is preferred. Containers should be labeled: **FLAMMABLE. VAPOR HARMFUL.**

Improper filling of portable gasoline containers creates a danger of fire. Only dispense gasoline into approved and properly labeled gasoline containers. Always place portable containers on the ground while filling. Ensure pump nozzle is in contact with the container while filling. Do not use the nozzle's lock open device. Do not fill portable containers that are inside a vehicle or trailer / truck bed.

When handling, use non-sparking tools and equipment. Do not use as a cleaner or solvent. Use only as motor fuel. **DO NOT SIPHON BY MOUTH.**

8. EXPOSURE CONTROLS, RESPIRATORY & PERSONAL PROTECTION

ENGINEERING CONTROLS: Assure adequate natural or mechanical ventilation. Eliminate all sources of ignition.

PERSONAL PROTECTION: If contact is likely, the following protective clothing and equipment is recommended.

PROTECTIVE CLOTHING: Use full-face shield, chemical goggles, impervious gloves, boots, and whole-body protection.

RESPIRATOR: Approved respiratory protection must be used when vapors or mist concentrations are unknown or exceed the TLV. Avoid prolonged or repeated breathing of vapor or mists.

OCUPATIONAL EXPOSURE LIMITS

COMPONENT	*LIMIT*	*TWA*	*STEL*	*CEILING*	*NOTATION*	*OTHER*
Gasoline	ACGIH_TLV	300ppm	500ppm		A3	
Cyclohexane	OSHA_PEL	300ppm				
Cyclohexane	ACGIH_TLV	100ppm				CNS
Benzene	OSHA_PEL	1ppm	5ppm			
Benzene	OSHA_Z2	10ppm		25ppm		
Benzene	ACGIH_TLV	0.5ppm	2.5ppm		A1	Skin
Toluene	OSHA_PEL	200ppm		300ppm		
Toluene	ACGIH_TLV	50ppm			A4	Skin, CNS
Xylene	OSHA_PEL	100ppm				
Xylene	ACGIH_TLV	100ppm	150ppm		A4	Irritation
Trimethyl Benzene	ACGIH_TLV	25ppm				Irritation, CNS
Naphthalene	OSHA_PEL	10ppm				
Naphthalene	ACGIH_TLV	10ppm	15ppm		A4	Skin
Ethyl Alcohol	OSHA_PEL	1000ppm				
Ethyl Alcohol	ACGIH_PEL	1000ppm			A4	Irritation

A1= Confirmed Human Carcinogen
A3= Confirmed Animal Carcinogen with Unknown Relevance to Humans
A4= Not Classified as a Human Carcinogen
CNS= Central Nervous System
Skin= Absorption through the skin may contribute to overall exposure

9. PHYSICAL AND CHEMICAL PROPERTIES

APPEARANCE/PHYSICAL STATE: Liquid

COLOR: Clear/bronze/red/yellow/purple

DENSITY/SPECIFIC GRAVITY (g/ml): 0.65 – 0.75

VAPOR DENSITY (air=1): >1

VAPOR PRESSURE: 7-15 PSIA

BOILING POINT/RANGE: 230°F

SOLUBILITY IN WATER: Negligible

VISCOSITY: N/A/F

pH : N/A

FREEZING POINT: -76°F

10. STABILITY AND REACTIVITY

GENERAL: This product is stable

INCOMPATIBLE MATERIALS AND CONDITIONS TO AVOID: Avoid Halogens, strong acids, alkalies, and oxidizers. Also keep away from heat, sparks, flame and static electricity.

HAZARDOUS DECOMPOSITION: Incomplete burning can produce carbon monoxide

11. TOXICOLOGICAL INFORMATION

SYSTEMIC: Petroleum-derived fuels and fuel oils are complex and variable mixtures of hydrocarbons. In general, the more viscous the mixture, the less toxic it will be. At high-level exposures, humans experience multiple organ failures, some of which may be due to hypoxia and secondary to the failure of other organ systems. In humans, kidney failure has been noted only at high, acute levels of exposures and appears reversible. Liver enzymes may be transiently elevated. At lower level exposures, most acute health effects are reversible. People can be exposed by inhalation, ingestion and dermal contact. Frequently, people are exposed by combined and inhalation exposure.

ACUTE: Inhalation: Headaches, confusion, disorientation, blurred vision occur with inhalation. Higher exposures may cause hallucinations, CNS excitation, drowsiness, CNS depression. Seizure and coma occur from very high exposures and death may result from respiratory depression. ECG changes, cardiac arrhythmias, tachycardia, shock and cardiovascular collapse can occur. Pneumonia, pulmonary edema and hemorrhages can occur.

Ingestion: Central nervous system, cardiovascular, and respiratory effects have been reported with acute exposures to various hydrocarbon fuels and oils similar to those reported with inhalation. Nausea, vomiting, cramping and diarrhea may occur.

Eye: Eye irritation to atomized gasoline has been noted at 200, 500 and 1000 mg/m^3 for 30 minutes and after an 8-hour exposure to 140 ppm. Atomized gasoline has the same composition as liquefied gasoline while gasoline vapors are different. Conjunctivitis has been reported after 1 hour of exposure to 900 ppm.

Skin: Mild erythema to full thickness chemical burns have occurred after prolonged exposure to arious hydrocarbon fuels and oils.

CHRONIC: Chronic exposure results in kidney damage in male rats. However, this damage appears to be related to a protein produced in large amounts in male rats, but not in humans or female rats. Occupational exposures in petroleum refining are considered Group 2A (probably carcinogenic) by IARC.

Liver and kidney tumors have been noted in animals. Data is less clear in humans because of confounding factors in epidemiological studies. Some components (e.g. benzene) are known carcinogens.

Contains benzene, a known human carcinogen, which can be toxic to the blood and blood-forming organs.

Appendix A- 2012 Fuel Purchases

Customer Sales History By Product Line
Sorted By Customer Number
Calendar Year 2012

Thomas Petroleum, LLC (TPW)

Division Number: 55 Bowen Customers

Customer Number	Jan	Feb	Mar	Apr	May	Jun	Jul	Aug	Sep	Oct	Nov	Dec	Total
0013473 IDAHO STATE UNIV. (FUEL					Customer Type:	EDU		Price Level: Y		Salesperson: 0055 Bowen			
	Product Line: ITM			MISCELLANEOUS ITEMS				Unit of Measure:					
Quantity Sold	0	2	0	0	0	0	0	0	0	0	0	0	2
Prior Year Quantity Sold	0	2	0	0	0	0	0	0	0	0	1	0	3
Dollars Sold	0	8	0	0	0	0	0	0	0	0	0	0	8
Prior Year Dollars Sold	0	16	0	0	0	0	0	0	0	0	8	0	24
	Product Line: 0100			Gasoline				Unit of Measure:		GAL			
Quantity Sold	4,005	11,744	4,004	3,978	4,501	3,998	7,534	3,893	3,496	7,982	7,995	0	63,130
Prior Year Quantity Sold	3,605	8,490	3,703	3,998	3,998	3,500	4,501	4,488	4,002	7,502	3,382	3,447	54,627
Dollars Sold	9,752	20,830	13,297	12,700	14,455	12,742	21,078	12,666	11,512	13,284	24,671	0	166,987
Prior Year Dollars Sold	8,321	21,984	10,978	12,512	12,751	10,852	13,798	14,021	12,765	22,828	9,937	9,263	160,010
	Product Line: 0300			Diesel Clear				Unit of Measure:		GAL			
Quantity Sold	0	0	2,502	0	0	0	0	0	0	0	0	0	2,502
Prior Year Quantity Sold	0	0	0	0	0	0	0	0	0	0	0	0	0
Dollars Sold	0	0	9,211	0	0	0	0	0	0	0	0	0	9,211
Prior Year Dollars Sold	0	0	0	0	0	0	0	0	0	0	0	0	0
	Product Line: 0500			Diesel Dyed				Unit of Measure:		GAL			
Quantity Sold	1,502	9,381	0	3,001	2,502	0	3,012	1,500	2,012	6,704	5,037	0	34,651
Prior Year Quantity Sold	2,600	6,300	3,309	3,001	3,000	0	0	2,300	2,200	5,302	2,499	3,000	33,311
Dollars Sold	4,645	21,130	0	10,646	8,319	0	8,295	5,372	7,683	11,911	17,253	0	95,255
Prior Year Dollars Sold	7,134	19,207	11,440	10,709	10,295	0	0	7,407	7,607	16,954	9,115	10,320	110,387
	Product Line: 8100			Fuel Treatments				Unit of Measure:		GAL			
Quantity Sold	0	0	0	0	0	0	0	0	0	0	2	0	2
Prior Year Quantity Sold	0	0	0	0	0	0	0	0	0	0	0	0	0
Dollars Sold	0	0	0	0	0	0	0	0	0	0	0	0	0
Prior Year Dollars Sold	0	0	0	0	0	0	0	0	0	0	0	0	0
	Product Line: 9700			Freight				Unit of Measure:		GAL			
Quantity Sold	5,507	21,125	6,506	6,979	7,003	3,998	10,546	5,393	5,518	14,686	13,032	0	100,283
Prior Year Quantity Sold	6,205	14,790	7,012	6,999	6,998	3,500	4,501	6,788	6,302	12,504	5,882	6,447	87,938
Dollars Sold	56	143	66	70	71	40	107	54	56	74	132	0	868
Prior Year Dollars Sold	39	103	40	43	45	37	47	50	44	105	60	65	677
Customer 55-0013473 Totals													
Quantity Sold	11,014	42,252	13,012	13,958	14,006	7,996	21,092	10,786	11,016	29,372	26,066	0	200,570
Prior Year Quantity Sold	12,410	29,582	14,024	13,998	13,996	7,000	9,002	13,576	12,604	25,008	11,765	12,894	175,879
Dollars Sold	14,453	42,111	22,574	23,417	22,845	12,782	29,479	18,092	19,251	25,269	42,056	0	272,329
Prior Year Dollars Sold	15,493	41,309	22,457	23,264	23,091	10,889	13,846	21,478	20,617	39,887	19,120	19,648	271,098
Division 55-Bowen Customers Totals													
Quantity Sold	11,014	42,252	13,012	13,958	14,006	7,996	21,092	10,786	11,016	29,372	26,066	0	200,570
Prior Year Quantity Sold	12,410	29,582	14,024	13,998	13,996	7,000	9,002	13,576	12,604	25,008	11,765	12,894	175,879
Dollars Sold	14,453	42,111	22,574	23,417	22,845	12,782	29,479	18,092	19,251	25,269	42,056	0	272,329
Prior Year Dollars Sold	15,493	41,309	22,457	23,264	23,091	10,889	13,846	21,478	20,617	39,887	19,120	19,648	271,098
Report Totals:													
Quantity Sold	11,014	42,252	13,012	13,958	14,006	7,996	21,092	10,786	11,016	29,372	26,066	0	200,570
Prior Year Quantity Sold	12,410	29,582	14,024	13,998	13,996	7,000	9,002	13,576	12,604	25,008	11,765	12,894	175,879
Dollars Sold	14,453	42,111	22,574	23,417	22,845	12,782	29,479	18,092	19,251	25,269	42,056	0	272,329
Prior Year Dollars Sold	15,493	41,309	22,457	23,264	23,091	10,889	13,846	21,478	20,617	39,887	19,120	19,648	271,098

TEM - S. Stine
6/16/2012

ISU - Tier II/PTC Mod
Boilers #1 & #2 NO. Exit Velocity
P. 1 of 2

Boiler 1 Design Duty = 32.05 MMBtu/hr

F_w (nat. gas) = 10,610 wscf/MMBtu (@20°C, 760 mmHg)

(EPA Method 19 Table 19-2, attached)

Note: coal F factors very similar

ISU Elevation ≅ 1370 m
Barometric Pressure = 645 mmHg

Convert to actual outlet conditions —

$PV = nRT$ $\quad n_1 R_1 = n_2 R_2$

$nR = \frac{PV}{T}$ $\quad \frac{P_1 V_1}{T_1} = \frac{P_2 V_2}{T_2}$ $\quad \therefore \quad V_2 = \frac{P_1 V_1 T_2}{T_1 P_2}$

T_2 = temp @ stack outlet = 355 °F (per previous application)

$V_1 = \frac{32.05 \text{ MMBtu}}{\text{hr}} \times \frac{10610 \text{ wscf}}{\text{MMBtu}} = 340{,}051 \frac{\text{scf}}{\text{hr}}$

$V_2 = \frac{P_1 V_1 T_2}{T_1 P_2} = \frac{(760 \text{ mmHg})(340051 \text{ SCFH})(355 + 460°R)}{(68 + 460°R)(645 \text{ mmHg})}$

V_2 = 618474 cf/hr (at outlet conditions)

Velocity, $v_{out} = \frac{V_2}{A} = \frac{618474 \text{ cf/hr}}{\pi/4 \, (5.5 \text{ ft})^2} \times \frac{\text{hr}}{3600 \text{ s}}$

$v_{out} = 7.23 \text{ ft/s} * \frac{\text{m}}{3.28 \text{ ft}} = 2.20 \text{ m/s}$ (Boiler 1)

Boilers 1 & 2 share a stack, but are not necessarily in simultaneous operation.

Boiler 2 $v_{out} = v_{B\#1} * \frac{Q_{B\#2}}{Q_{B\#1}} = 2.20 \left(\frac{23.0 \text{ MMBtu/hr}}{32.05 \text{ "}} \right) = 1.58 \text{ m/s}$

Previous modeling used 2.74 m/s for both units

ISU Tier II/PTC Mod
Boilers #1 & #2 - N.Gas
Exit V
P. 2 of 2

Combined velocity = $2.20\left(\frac{32.05+23}{32.05}\right)$ = 3.78 m/s

TEM - S. Stine

ISU - Tier II / PTC Mod.
Boiler 37 Exit Velocity

This boiler stack will be equipped with a blower but don't have info yet. At a minimum, the exit velocity will be greater than that if there was no blower. Use Method 19 to calculate minimum velocity.

$Q_{B-37} = 2.5$ MMBtu/hr natural gas

F_w (nat. gas) = 10,610 uscf/MMBtu (EPA Method 19, Table 19-2 attached)
(@ 20 °C, 760 mm Hg)

ISU elevation ≈ 1370 m ⇒ Barometric Pressure ≈ 645 mm Hg

$$V_2 = \frac{P_1 V_1 T_2}{T_1 P_2}$$

T_2 = temp @ stack out = 320°F (conservative minimum)

$$V_1 = 2.5 \frac{\text{MMBtu}}{\text{hr}} \times 10{,}610 \frac{\text{uscf}}{\text{MMBtu}} = 26{,}525 \frac{\text{scf}}{\text{hr}}$$

$$V_2 = \frac{P_1 V_1 T_2}{T_1 P_2} = \frac{(760 \text{ mm Hg})(26{,}525 \text{ SCFH})(320+460°)}{(68+460°)(645 \text{ mm Hg})} = 433°K$$

V_2 = 46,171 cf/hr (at outlet conditions)

Per Precision, flue stack = 14"

$$\text{Velocity, } V_{out} = \frac{V_2}{A} = \frac{46{,}171 \text{ cf/hr}}{\pi/4 \,(14/12)^2} \times \frac{\text{hr}}{3600}$$

$$V_{out} = 12.0 \text{ ft/s} \times \frac{\text{m}}{3.28 \text{ ft}} = 3.66 \text{ m/s}$$

1144

TABLE 19-2. F FACTORS FOR VARIOUS FUELS[1]

Fuel Type	F_d		F_w		F_c	
	dscm/J	dscf/10^6 Btu	wscm/J	wscf/10^6 Btu	scm/J	scf/10^6 Btu
Coal:						
Anthracite[2]	2.71×10^{-7}	10,100	2.83×10^{-7}	10,540	0.530×10^{-7}	1,970
Bituminus[2]	2.63×10^{-7}	9,780	2.86×10^{-7}	10,640	0.484×10^{-7}	1,800
Lignite	2.65×10^{-7}	9,860	3.21×10^{-7}	11,950	0.513×10^{-7}	1,910
Oil[3]	2.47×10^{-7}	9,190	2.77×10^{-7}	10,320	0.383×10^{-7}	1,420
Gas:						
Natural	2.34×10^{-7}	8,710	2.85×10^{-7}	10,610	0.287×10^{-7}	1,040
Propane	2.34×10^{-7}	8,710	2.74×10^{-7}	10,200	0.321×10^{-7}	1,190
Butane	2.34×10^{-7}	8,710	2.79×10^{-7}	10,390	0.337×10^{-7}	1,250
Wood	2.48×10^{-7}	9,240	--	--	0.492×10^{-7}	1,830
Wood Bark	2.58×10^{-7}	9,600	--	--	0.516×10^{-7}	1,920
Municipal	2.57×10^{-7}	9,570	--	--	0.488×10^{-7}	1,820
Solid Waste	--					

[1]Determined at standard conditions: 20 °C (68 °F) and 760 mm Hg (29.92 in. Hg)
[2]As classified according to ASTM D 388.
[3]Crude, residual, or distillate.

FanCalc Results

ENERVEX™
GREEN BEFORE GREEN WAS IN

FanCalc Job #: F-41450
Job/Project Name: ISU Rendezvous

Prepared for: Kent Bailey
Company: Midgley-Huber, Inc.

Prepared by: Karl Coleman
Email: karlc@enervex.com

Received 8/3/2012
Boiler 37 Exhaust fan Info
(stack located on roof of
Bldg 38 - Rendezvous)

System Data

System Type: Blr/WH Vent Sizing
Description: Single Appliance

Location Data

Local Altitude: 4500 ft.
Ambient Temp.: 60 F

Equipment Data

No.	Manufacturer	Model	Category	Fuel	Input (MBTU)	CO2 %	Temp. (F)	Pres. (in.W.C)
1	Precision Boiler	FPW-P2500	III	Natural Gas	1400-2500	8.5	360	0.00

Vent System - Mechanical

No.	Model	Dimensions	Vertical	Horizontal	Mass Flow	Velocity	Temp.	CO2	Draft	Pres. Drop	Dewpoint
1	Positive Pressure	14	2'	0'	2503	1021	419	8.50	0.01	0.02	120
2	Positive Pressure	14	0'	10'	2503	1012	412	8.50	0.00	0.02	120
3	Positive Pressure	14	0'	10'	2503	999	400	8.50	0.00	0.03	120
4	Positive Pressure	16	26'	0'	2503	746	379	8.50	0.13	0.02	120
5	Positive Pressure	16	0'	4'	2503	731	362	8.50	0.00	0.01	120
6	Positive Pressure	16	7'	0'	2503	726	357	8.50	0.03	0.00	120

Partial Load Analysis - Mechanical Venting

Appliance ON (Input)	Input	Mass Flow	Draft (20°F)	Draft (60°F)	Draft (90°F)	Temp	Min Vel.	Max. Vel.
1-MAX	2500	2503	-0.097	-0.061	-0.036	353	726	1021
1-MIN	1400	1402	-0 163	-0.126	-0.102	322	392	571

Used 320°F (433 K)

Vent System - Gravity

No.	Model	Dimensions	Vertical	Horizontal	Mass Flow	Velocity	Temp.	CO2	Draft	Pres. Drop	Dewpoint
1	Positive Pressure	14	2'	0'	2503	1021	419	8.50	0.01	0.02	120
2	Positive Pressure	14	0'	10'	2503	1012	412	8.50	0 00	0.02	120
3	Positive Pressure	14	0'	10'	2503	999	400	8.50	0.00	0.03	120
4	Positive Pressure	16	26'	0'	2503	746	379	8.50	0 13	0.02	120
5	Positive Pressure	16	0'	4'	2503	731	362	8.50	0.00	0.01	120
6	Positive Pressure	16	7'	0'	2503	726	357	8.50	0.03	0.00	120

Partial Load Analysis - Gravity Venting

Appliance ON (Input)	Input	Mass Flow	Draft (20°F)	Draft (60°F)	Draft (90°F)	Temp.	Min. Vel.	Max. Vel
1-MAX	2500	2503	-0.097	-0.061	-0.036	353	726	1021
1-MIN	1400	1402	-0.163	-0.126	-0.102	322	392	571

Results

1009 CFM @ 0.000 in. W.C. ← Use for velocity calc (see next page)

ENERVEX™
GREEN BEFORE GREEN WAS IN

Venting Solution

RSV315

$Q_{output} = 1009\ ft^3/min$

$Area = (4.75\ inch)^2/2 \times 4\ triangles \times \frac{ft^2}{144\ in^2}$

$= 0.313\ ft^2$

$v = \frac{1009\ CFM}{0.313\ ft^2} \times \frac{min}{60\ s} = 53.66\ ft/s$

$= 16.36\ m/s$

Much higher than 3.66 m/s. Passed @ lower velocity
Keep this for future flexibility.

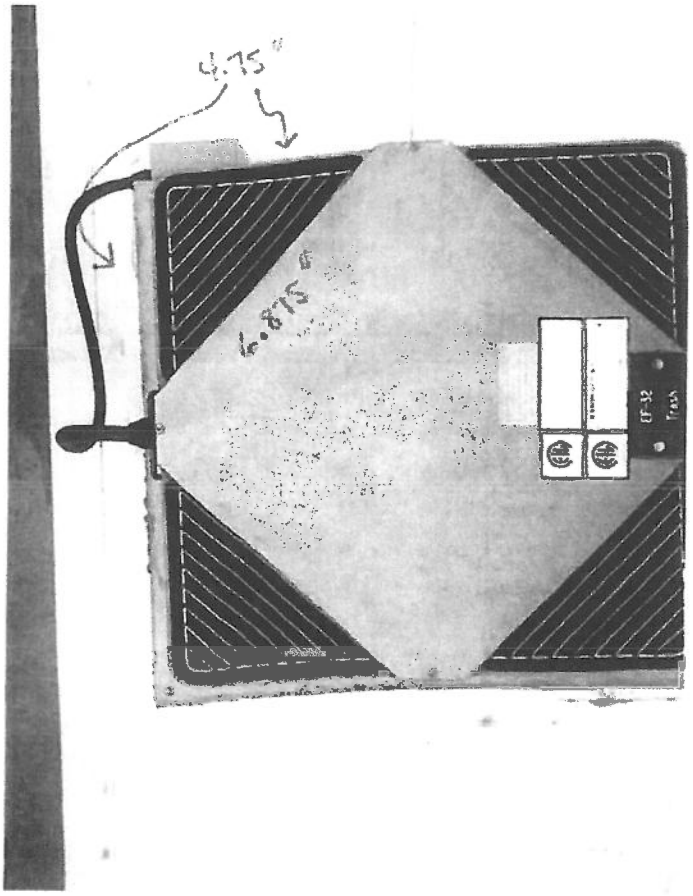

APPENDIX B: EQUIPMENT SPECIFICATION SHEETS

THIS PAGE INTENTIONALLY LEFT BLANK FOR TWO-SIDED PRINTING

ConVault Cutaway

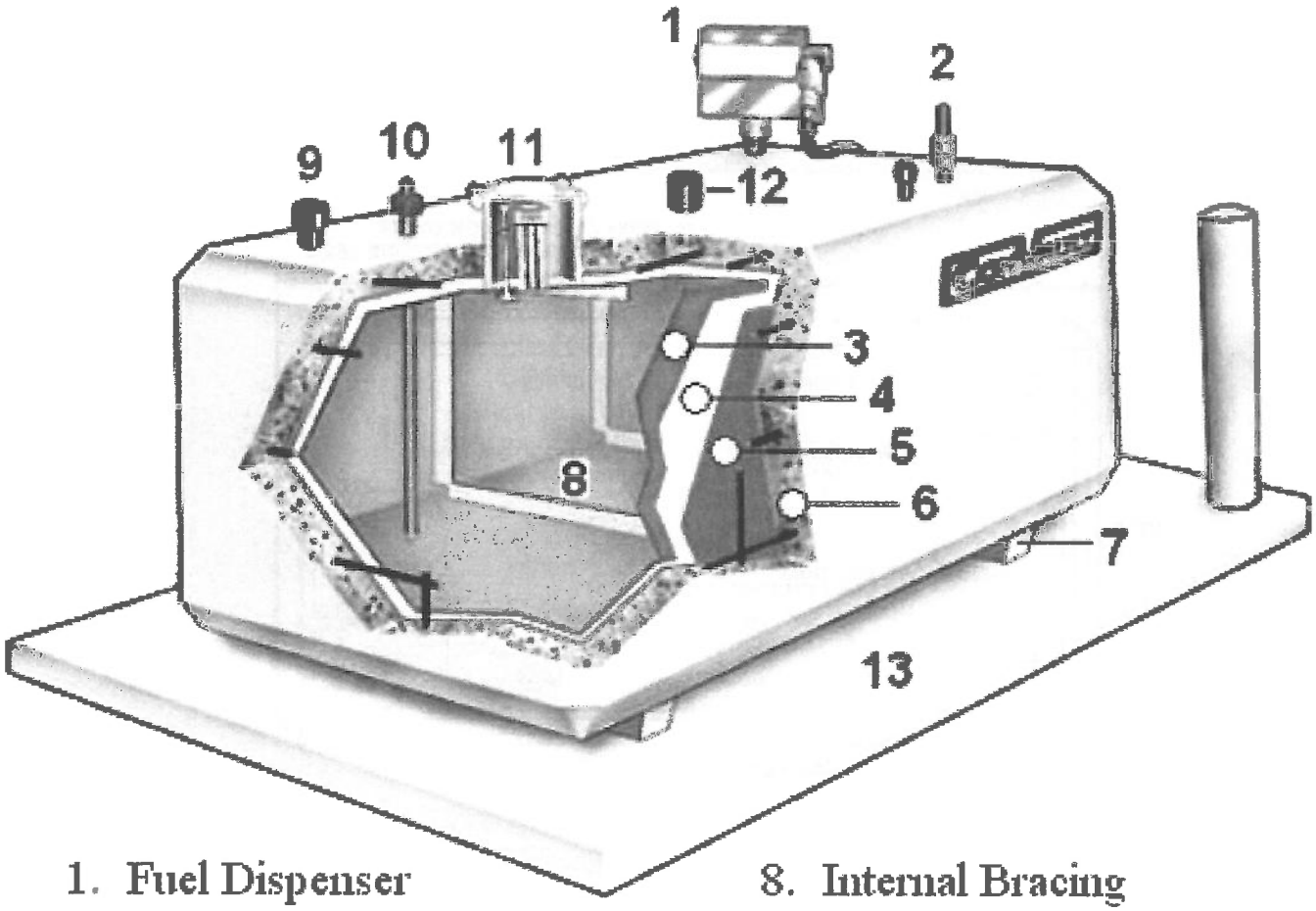

1. Fuel Dispenser
2. Level Indicator
3. Steel Primary Tank
4. Polystyrene Layer
5. HDPE Liner
6. Reinforced Concrete
7. Support Legs
8. Internal Bracing
9. Atmospheric Vent
10. Leak Detector Tube
11. Overfill Containment
12. Emergency Vent
13. Concrete Slab

Owner's Manual Figure 4

Multi-Compartment "E" Design

DRAWING TOC | PREVIOUS

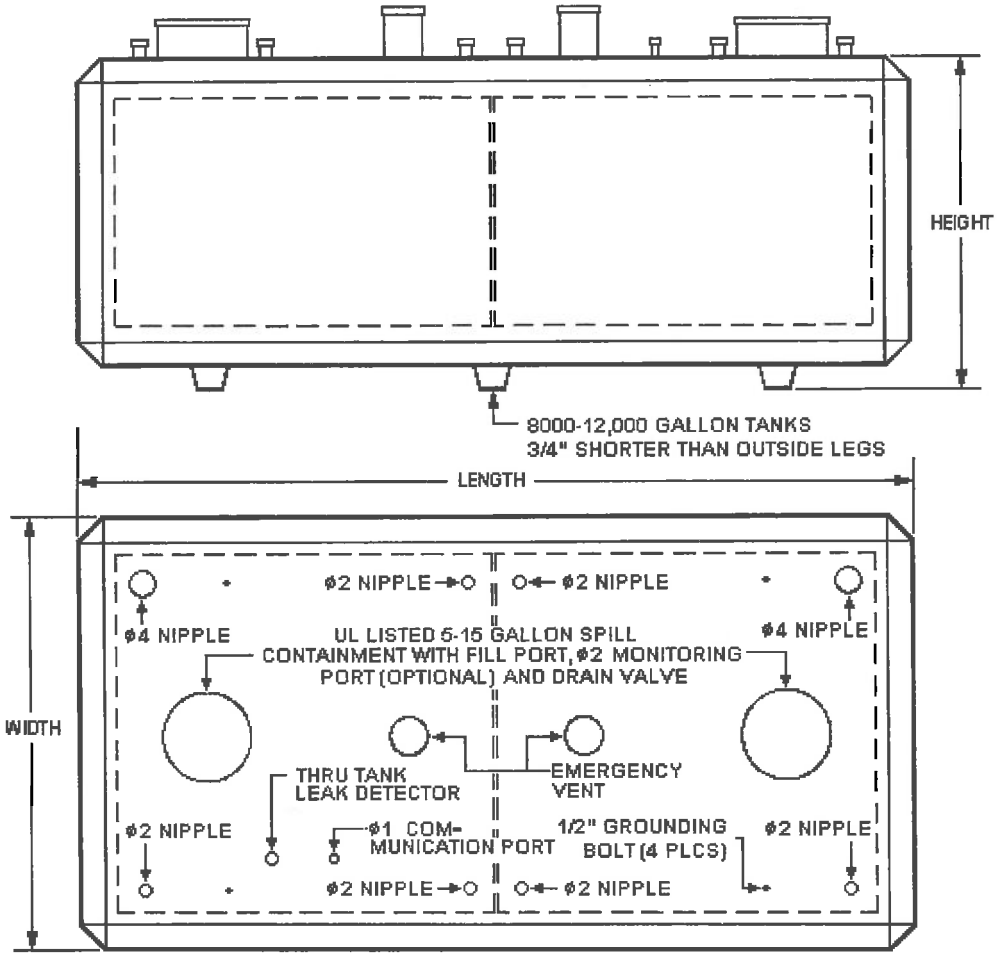

Copyright © 2001 ConVault, Inc.

TANK SIZES

NOTE: Not all sizes or shapes are available from all plants.
Unit's weight will vary from plant to plant.
Please check with your local representative for actual weight, dimensions and availability.
The Cylindrical shape is available **only** from the Florida plant.

ConVault Size	Weight (Empty)	Length	Width	Height
Gallons	Pounds	ft. & in.	ft. & in.	ft. & in.
125*	6,000	4' 0.5"	4' 0.5"	3' 11"
250	8,000	7' 8 "	3' 9.5"	3' 3"
500	12,000	11' 0"	4' 6"	3' 4"
1,000	18,000	11' 0"	5' 8"	4' 4"
2,000	30,000	11' 3"	8' 0"	5' 6"
3,000 DW*	36,000+	12' 2 "	8' 0"	6' 11 "
3,000 LP*	35,500+	11' 3"	8' 0"	7' 3.5"
3,000 SP*	37,000+	17' 7"	8' 0"	5' 2"
4,000 DW*	40,000+	12' 2"	8' 0"	8' 9"
4,000 LP*	45,000+	17' 7"	8' 0"	6' 5"
5,200*	47,000+	15' 6 "	8' 0"	8' 9 "
6,000*	59,000+	17' 7"	8' 0"	8' 9"
8,000*	72,000+	23' 1"	8' 0"	8' 9"
10,000*	87,500+	28' 7"	8' 0"	8' 9"
12,000*	101,000+	34' 1"	8' 0"	8' 9"
Multi-Compartment Tank Sizes Many other splits are available. Please check with your local representative for availability, weight and dimensions.				
Double 125* (250 Split)	8,000	7' 8"	3' 9"	3' 3"
Double 250 (500 Split)	12,000	11' 0"	4' 6"	3' 4"
Double 500 (1000 Split)	18,000	11' 0"	5' 8"	4' 4"
Double 1,000 (2000 Split)	30,000	11' 3"	8' 0"	5' 6"
Double 1,500 DW* (3000 Split)	36,000+	12' 2"	8' 0"	6' 11"
Double 1,500 LP* (3000 Split)	35,500+	11' 3"	8' 0"	7' 3.5"
Double 1,500 SP* (3000 Split)	37,000+	17' 7"	8' 0"	5' 2 "
Double 2,000 DW* (4000 Split)	40,000+	12' 2"	8' 0"	8' 9"
Double 2,000 LP* (4000 Split)	45,000+	17' 7"	8' 0"	6' 5"
Double 2,600* (5200 Split)	47,000+	15' 6"	8' 0"	8' 9"
Double 3,000 (6000 Split)	59,000+	17' 7"	8' 0"	8' 9"
Double 4,000* (8000 Split)	72,000+	23' 1"	8' 0"	8' 9"
Double 5,000 (10,000 Split)	87,500+	28' 7"	8' 0"	8' 9"
Double 6,000 (12,000 Split)	101,000+	34' 1"	8' 0"	8' 9"

*** This size is not available from all plants.**

Dan-Am is an independent company acting as
exclusive authorized importer for SATA in the United States

SATAjet® 3000 K RP®

Pressure fed high performance gun for top class finish results

Perfect for applying large quantities of paint for any job requiring the best finishes like car refinishing or airplane construction

- **Rapid work** is ensured by the particularly wide fan and the high material flow rates. The slightly higher air cap pressure, compared to HVLP guns, adds the feeling of working with a conventional high pressure gun. Thus, switching to VOC conforming gun is made easy.
- **Finest atomization and a top-class finish** are ensured by optimized high pressure. Even with the latest generation of High Solid materials, excellent atomization quality is achieved.
- Due to the higher air cap pressure, compared to HVLP guns, **less compressed air** is required for atomization.
- **Highest profitability** - SATA RP™ technology ensures transfer efficiencies considerably above 65 % required by VOC legislation.Therefore, this pressure-fed high performance gun not only helps to protect the environment, but also saves lots of expensive paint (approx. 30 % compared to a conventional high pressure gun).
- The **patented air circulation principle** provides an especially homogeneous and soft fan.
- **100 % hand checked nozzle sets** ensure the constantly high, well-known SATA quality - for complete guns as well as spare nozzle sets.
  The durable **air caps** are made of brass (not of aluminium), therefore ensuring a long life time - a factor particularly important in industrial use.
- Nozzle sets ranging from 0.8 to 2.0 mean a **wide field of application**.
- Rapid air cap change with the SATA Quick Change System™ (only 1.5 turns) - ideal for continuous coating.
- The gun can be adapted without great effort to existing **work stations**.
- **Excellent handling** - the short gun body, the **extremely low weight** and the optimum balance ensure the gun "fits like a glove".
- **Suitable for water-borne materials** - paint needle and nozzle are made of stainless steel, and the nickel-plated gun body has been refined with a special coating.
- To make **guns different from one another** (i.e. guns for basecoat and guns for clearcoat), the gun can be marked by means of an affixed coloured plastic disc (**Colour Code System™**).
- **Self-adjusting air and material packings** with **long life times** considerably reduce servicing efforts.
- The carefully **polished nickel-plated gun surface** and the Quick Change System reduce cleaning efforts as well.
- Naturally, the gun is equipped with a **material flow control, a round / flat spray control** and an **air micrometer**.
- Please also see our **broad range of material feed systems**, such as paint pressure tanks, diaphragm and piston pumps.
- Please take a look at our useful accessories for this gun !

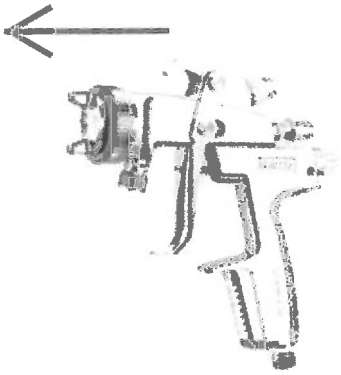

Downloads

Brochure (PDF, 1674 KB)

Spare parts list SATAjet® 3000 K RP® (PDF, 364 KB)

SATA TV

Quick reference how to paint or maintain a paint spray gun

To the videos

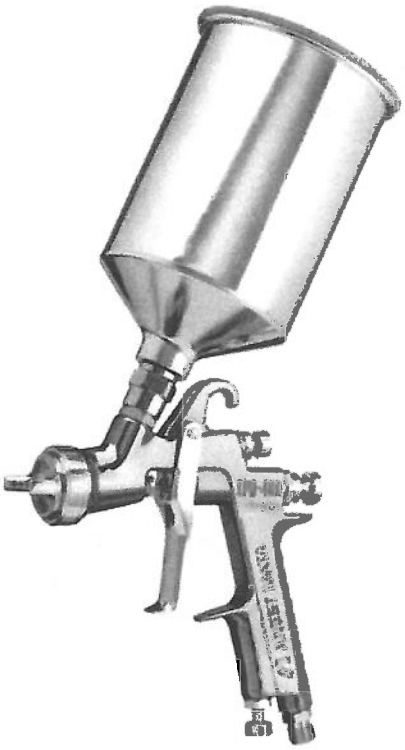

- Description
- Specifications
- Reviews

ANEST IWATA

LPH400-LV Gravity

View Larger

Model	Gun Only	Fluid Nozzle Size mm (inch)	Atomizing PSI	CFM	Fluid Output ml/min	Pattern Width mm (inch)	Air Cap Model	Weight g (lbs)	Application
LPH-400-124LV	5540	1.2 (0.047)	16.0	9.5	90	259 (10.2)	LV4	362 (0.80)	Light Industry hobby, Spot Repair, Fine Metallic
LPH-400-134LV	5640	1.3 (0.051)	16.0	9.5	110	279 (11.0)	LV4	362 (0.80)	Woodwork, Furniture, Metal,Automotive refinish Touch-ups, Base Coat, Top Coat
LPH-400-144LV	5550	1.4 (0.055)	16.0	9.5	130	290 (11.4)	LV4	362 (0.80)	Woodwork, Furniture, Metal,Automotive refinish Touch-ups, Base Coat, Top Coat
LPH-400-154LV	5535	1.5 (0.059)	16.0	9.5	140	295 (11.6	LV4	362 (0.80)	Single Stage, Base Coat, Medium to High Viscosity
LPH-400-164LV	5560	1.6 (0.060)	16.0	9.5	150	300 (11.8)	LV4	362 (0.80)	Sealers, Primer, Clear, Medium to High Viscosity
LPH-400-184LV	5570	1.8 (0.071)	16.0	9.5	190	320 (12.6)	LV4	362 (0.80)	Primer, High Viscosity

GFS Wave™ Filter Media

GFS Wave media (patent pending) is the most versatile single-stage filtration media made for paint spray booths. Lab testing indicates 99.83% particulate removal efficiency and field testing boasts excellent performance and reliability!

Low Run-Off

GFS Wave media has a convoluted surface designed to create a maximum surface area of filtration with exceptional depth loading ability. This filtration media not only removes overspray from the spray booth's exhaust air flow, the "Waves" capture and retain overspray within the media, reducing run-off. Reduced run-off means less booth floor clean-up and quicker, more efficient filter changes.

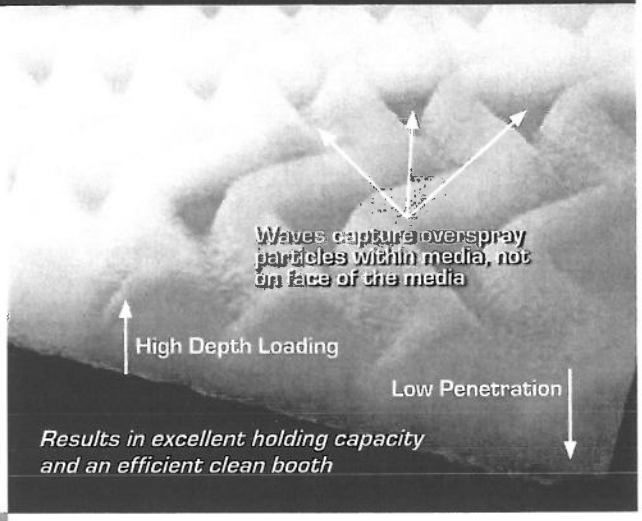

Average Performance Data

Characteristics	GFS Wave Media
Removal Efficiency	99.83%
Holding Capacity	4.4 lbs
Run Off	186 grams
Penetration	4 grams
Pressure Drop (initial/final)	0.12"/0.50" W.C.
Flammability Rating	UL Class II*

* United States and Canada Certified

Complete test reports available upon request

Test Conditions

Filter Size:	20" x 20" Wave pad
Paint Tested:	High-Solids Baking Enamel
Spray Rate:	136 gr./min.
Air Velocity:	150 FPM
Test Lab:	LMS Technologies
Test:	**Based on 40 CFR Part 63 Subpart HHHHHH consistent with ASHRAE 52.1**

GFS Wave Media Features

- Excellent paint removal efficiency to minimize particulate emissions.
- Accommodates all paints and a wide array of spray applications from clear coats to high solids and beyond.
- Clean exhaust air stream. Exhaust chamber, ductwork and fan are protected from a wide range of coating materials (low penetration).
- Material complies with the requirements of UL 900, NFPA-33, OSHA, and New York rule.
- Standard and custom cut sizes are available:

Standard Pads:	Standard Rolls:	
20" x 20"	80" x 16.5'	40" x 30'
20" x 25"	80" x 20'	45" x 30'
	30" x 24'	48" x 30'
	20" x 30'	54" x 30'
	24" x 30'	60" x 30'
	30" x 30'	45" x 48'
	36" x 30'	30" x 50'

Improve Your Profitability

A properly installed, operated and maintained paint spray booth can improve your bottom line profitability. Reduce your operating cost, while improving your performance.

Call **800-848-8738** and let your GFS representative show you how!

GLOBAL FINISHING SOLUTIONS • 800-848-8738 • info@globalfinishing.com

WWW.GLOBALFINISHING.COM

© 2010 Global Finishing Solutions. All Rights Reserved. GFSWAVE 04182010

GLOBAL FINISHING SOLUTIONS
THE WORLD LEADERS IN PAINT BOOTH TECHNOLOGY

Search Site

GFS on Facebook - Like 619n

Home | Contact | About GFS | Media Gallery | Technical Support | Parts & Filters | Careers | REQUEST INFO!

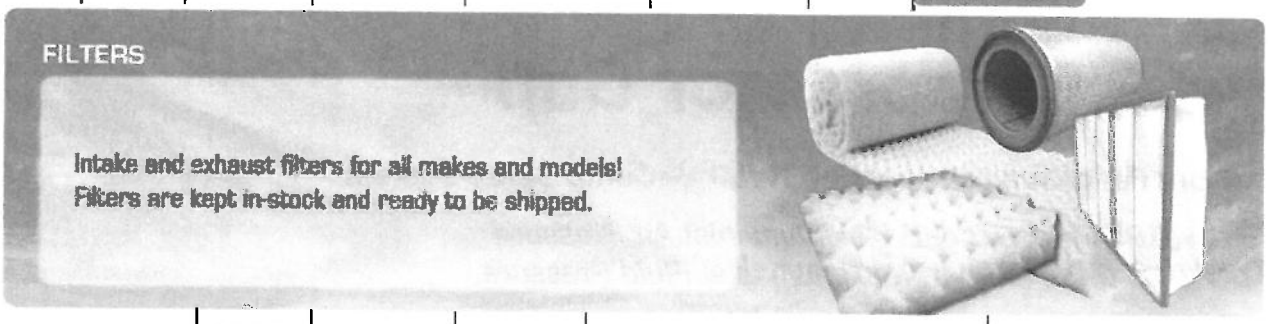

Parts & Filters Home | Products | Online Store | Downloads | Contact Information: 800-848-8738 Option 3

Features

Exhaust Filters

Below is a listing of our most popular filters, please contact GFS Parts & Filters Sales for additional filters and other filter accessories such as filter grids and clips, etc.

Meets New National Emission Standard

GFS WAVE Aqua filters have been approved for the NEW National Emission Standard.

Based on 40 CFR Part 63 Subpart HHHHHH consistent with ASHRAE 52.1

NEW! From GFS - WAVE Aqua paint booth filters! - Specially designed for maximum performance with waterborne paints!
Material complies with requirements of UL 900 and NFPA-33

Part No.	Description	Qty/Box
Pads		
FIL-ERP-2020-WA	20" X 20"	30
FIL-ERP-2025-WA	20" X 25"	30
Roll Media		
FIL-ERP-2030-WA	20" X 30 ft.	1
FIL-ERP-2430-WA	24" X 30 ft.	1
FIL-ERP-3024-WA	30" X 24 ft.	1
FIL-ERP-3030-WA	30" X 30 ft.	1
FIL-ERP-3050-WA	30" X 50 ft.	1
FIL-ERP-3630-WA	36" X 30 ft.	1
FIL-ERP-4030-WA	40" X 30 ft.	1
FIL-ERP-4530-WA	45" X 30 ft.	1
FIL-ERP-4548-WA	45" X 48 ft.	1
FIL-ERP-4830-WA	48" X 30 ft.	1
FIL-ERP-5430-WA	54" X 30 ft.	1
FIL-ERP-6030-WA	60" X 30 ft.	1
FIL-ERP-6020-WA	60" X 20 ft.	1

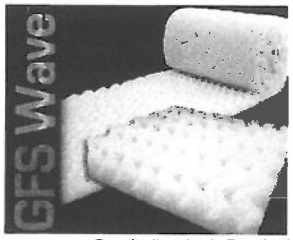

Specification sheet - Downloads

GFS WAVE Filter Media

GFS Wave filter media is designed to depth load with minimal face loading, is the most versatile single-stage filtration media made for paint spray booths. The 98.63% particulate removal efficiency incorporates an excellent filtration capacity and longer filter service life. Material complies with requirements of UL 900 and NFPA-33.

GFS Wave media has a convoluted surface designed to create a maximum surface area of filtration with exceptional depth loading ability. This filtration media not only removes overspray from the spray booth's exhaust air flow, the "Waves" capture and retain overspray within the media, reducing run-off. Reduced run off means less booth floor clean-up and quicker, more efficient filter changes.

Meets New National Emission Standard

GFS Wave filters have been approved for the NEW National Emission Standard.

Based on 40 CFR Part 63 Subpart HHHHHH consistent with ASHRAE 52.1

Part No.	Description	Qty/Box
Pads		
FIL-ERP-2020-W	20" X 20"	30
FIL-ERP-2025-W	20" X 25"	30
Roll Media		
FIL-ERP-2030-W	20" X 30 ft.	1
FIL-ERP-2430-W	24" X 30 ft.	1
FIL-ERP-3024-W	30" X 24 ft.	1
FIL-ERP-3030-W	30" X 30 ft.	1
FIL-ERP-3050-W	30" X 50 ft.	1
FIL-ERP-3630-W	36" X 30 ft.	1
FIL-ERP-4030-W	40" X 30 ft.	1
FIL-ERP-4530-W	45" X 30 ft.	1

INSTRUCTIONS–PARTS LIST

GRACO

309357

Rev. A

INSTRUCTIONS

This manual contains important warnings and information.
READ AND KEEP FOR REFERENCE.

US Patent Pending

HVLP Compressor Gun

Pressure Feed Gun for Use With HVLP V–Comp Spray System

135 psi (0.93 MPa, 9.3 bar) Maximum Inlet Air Pressure
50 psi (0.35 MPa, 3.5 bar) Maximum Inlet Fluid Pressure

Related Manuals

309245 – HVLP–V–Comp Spray System

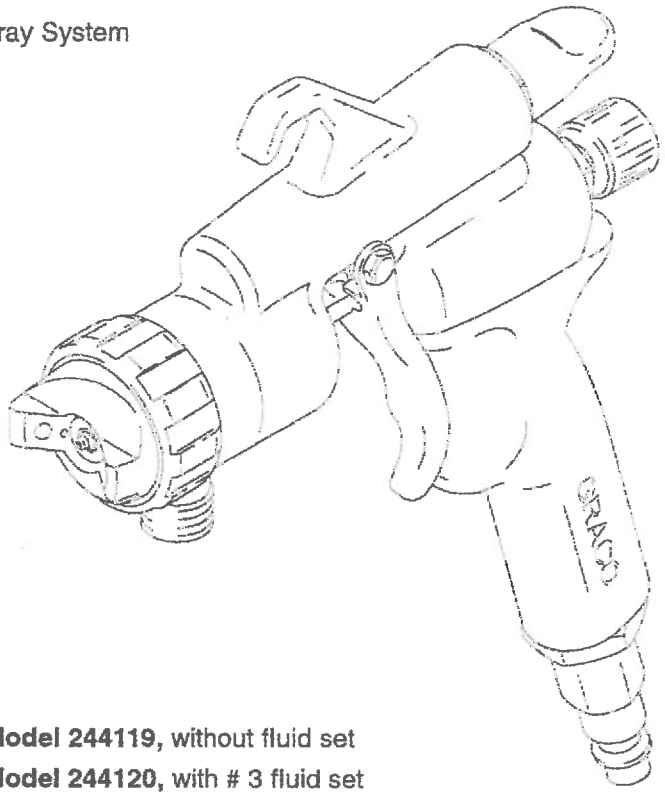

Model 244119, without fluid set
Model 244120, with # 3 fluid set

TI1320A

GRACO INC. P.O. BOX 1441 MINNEAPOLIS, MN 55440–1441
©COPYRIGHT 2001, GRACO INC.
Graco Inc. is registered to I.S. EN ISO 9001

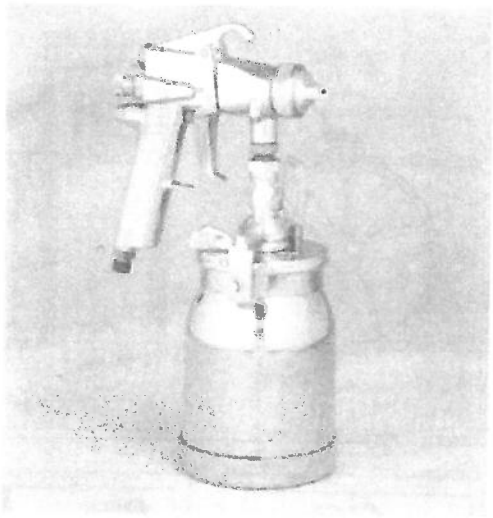

Pro-Finish CSA Gun

Specifications

Weight 24 oz
Air Inlet 1/4" nps (m)
Air Cap #2
Fluid Nozzle & Needle 043
Maximum Input Air Pressure 100 psi
Maximum Atomizing Pressure 10 psi
Maximum Input Fluid Pressure 50 psi
Product Number 770-400 (gun only)
Product Number 770-450 (gun with cup)

Pro-Finish – HVLP Needle-Nozzle / Air Cap Recommendation Chart

Fluid Needle/Nozzle		Air Cap		Material
Size	Part No.	Size	Part No.	Consult Paint Manufacturers for Proper Thinning Recommendations
029	770-467	#3 #2	770-616 770-617	Acrylic lacquers, stains, dyes
043	770-468	#2 #1	770-615 770-618	Water born clears, epoxy polyurethanes, automotive base coat, acrylic urethanes and enamels
051	770-469	#1 #0	770-615 770-618	Full bodied stains, alkyd enamels, water born enamels
073	770-470	#1 #0	770-615 770-616	Finish grade latexes, alkyd wall paints

NOTE: Most coatings listed must be reduced to a spray consistency to ensure proper atomization!

Pro-Finish Accessories

DESCRIPTION	PART NUMBER
Pro-Finish Gun with cup	770-441
Cup	770-195
029 Needle/Nozzle Set (Fine Finish)	770-467
043 Needle/Nozzle Set (All Purpose)	770-468
051 Needle/Nozzle Set (High Viscosity)	770-469
073 Needle/Nozzle Set (Extra High Viscosity)	770-470
#0 Air Cap	770-422
#1 Air Cap	770-615
#2 Air Cap	770-616
#3 Air Cap	770-617
Complete Atomizing Set	770-478
Pro-Finish 200 Turbine Filter (Package of 3)	770-459
Pro-Finish 300 Turbine Filter (Package of 3)	770-460
2' Whip	770-438
20' Flex Air Hose	770-447
20' 3/8" Fluid Hose	770-468
Two Gun Air Adapter	770-474

JBI®

HEAVY - DUTY EXHAUST UNITS

Approved for General and Hazardous Locations

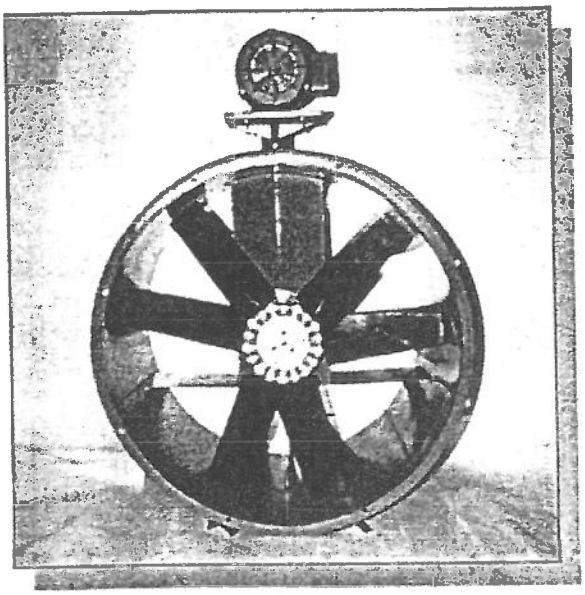

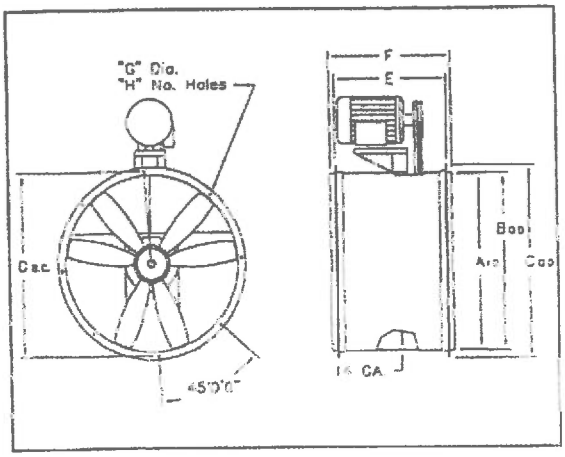

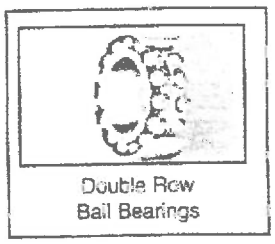

Double Row
Ball Bearings

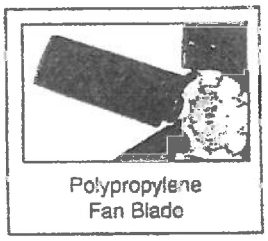

Polypropylene
Fan Blade

■ HEAVY - DUTY EXHAUST UNITS

JBI Heavy Duty Exhaust Units lend themselves particularly well to spray booth, window, wall and roof located exhaust equipment installations. Since mounting can be either vertical or horizontal position, complicated piping connections can be advantageously avoided. These economical exhaust units afford a practical and safe means of ventilation for spray booths, ovens and other industrial equipment. These quality exhaust units are compact and easy to install.

■ CONSTRUCTION FEATURES

JBI Heavy - Duty Exhaust Units are built to meet all requirements of the National Board of Fire Underwriters, local and state fire and health regulations and are listed and approved by Factory Mutual Laboratories. Models are available in most capacity ratings to meet individual needs over a wide range of commercial and industrial ventilation requirements.

■ STANDARD FEATURES

- Precision ground steel shaft.
- Heavy gauge steel band and mounting ring.
- Motor belt tension easily adjusted to accommodate various size sheaves.
- V-belt drive is completely protected from harmful elements within duct area.
- Rugged, vapor-tight drive enclosure, contaminated exhaust cannot escape.
- Balanced high-tech polypropylene spark and corrosion resistant fan blades.
- Standard blades. -40° F to +185° F, also available in fiberglass polyamide blades, -50° F to +250° F.
- Double row ball bearing assembly are virtually service free.
- Adjustable for proper belt tension.

HEAVY - DUTY EXHAUST UNITS - DIMENSIONAL SPECIFICATIONS

Model	A	B	C	D	E	F	G	H	Appox. Ship. Weight (lbs.)
8049 BA&BB	17 3/4	18	21	19 1/2	14	16	7/16	8	74
8049 BC	17 3/4	18	21	19 1/2	14	16	7/16	8	74
8049 BD	17 3/4	18	21	19 1/2	14	16	7/16	8	74
8049 CC	23 3/4	24	27	25 1/2	14	16	7/16	8	105
8049 CD&CE	23 3/4	24	27	25 1/2	14	16	7/16	8	105
8049 CF&CH	23 3/4	24	27	25 1/2	14	16	7/16	8	105
8049 DE	26 3/4	27	30	28 1/2	14	16	7/16	8	112
8049 DF&DH	26 3/4	27	30	28 1/2	14	16	7/16	8	112
8049 EF, EH, EJ &EK	33 3/4	34	37	35 1/2	22	24	7/16	8	190
8049 FH&FJ	41 3/4	42	45	43 1/2	22	24	7/16	8	304
8049 FK&FL	41 3/4	42	45	43 1/2	22	24	7/16	8	304
8049 HH&HJ	47 3/4	48	51	49 1/2	22	24	7/16	8	355
8049 HK&HL	47 3/4	48	51	49 1/2	22	24	7/16	8	355

HEAVY - DUTY EXHAUST UNITS

Exhaust Fan Performance Chart

HEAVY - DUTY EXHAUST UNITS											
Fan Model	Dia.	Motor H.P.	Fan Speed R.P.M.	Free Air Delivery C.F.M.	Average Delivery In Cubic Feet Per Minute at 1/4" Static Press.	3/8" Static Press.	1/2" Static Press.	3/4" Static Press.	1" Static Press.	1 1/4" Static Press.	Approx. Shipping Weight (lb.)
8049-BB	18"	1/3	1,495	3,540	2,850	2,420	1,925	810			103
8049-BC	18"	1/2	1,725	3,750	3,185	2,640	2,230	1,020			103
8049-BD	18"	3/4	1,840	4,125	3,600	3,120	2,650	1,720	1,325		103
8049-CC	24"	1/2	1,294	5,850	4,550	2,800	1,800				134
8049-CD	24"	3/4	1,510	6,800	5,750	5,050	3,200	2,000			134
8049-CE	24"	1	1,725	7,600	6,800	6,200	5,250	3,300	1,875		134
8049-CF	24"	1 1/2	1,617	8,200	7,500	7,050	6,550	4,700	3,050		134
8049-CH	24"	2	1,725	9,070	8,460	3,060	7,650	6,350	4,480		134
8049-DE	27"	1	1,725	10,150	8,740	7,920	6,650	3,125	1,850		146
8049-DF	27"	1 1/2	1,510	11,900	9,750	8,750	7,700	5,600	3,400		146
8049-DH	27"	2	1,617	12,300	10,500	9,600	8,600	6,400	4,700		146
8049-EF	34"	1 1/2	1,050	14,200	11,900	10,750	9,400	6,750	3,600		237
8049-EH	34"	2	1,160	15,800	13,700	12,700	11,550	9,300	6,750	3,750	237
8049-EJ	34"	3	1,340	18,000	16,100	15,400	14,200	12,350	10,300	8,250	237
8049-EK	34"	5	1,495	22,800	20,600	19,200	18,800	15,900	12,500	9,800	237
8049-FH	42"	2	1,108	20,000	16,600	14,700	12,500	8,000			302
8049-FJ	42"	3	1,232	22,200	19,400	17,800	15,900	12,000	8,000	4,300	302
8049-FK	42"	5	1,478	26,800	24,200	23,000	21,500	18,500	15,100	11,500	302
8049-FL	42"	7 1/2	1,663	30,200	28,000	26,900	25,700	23,300	20,700	17,900	302
8049-HH	48"	2	986	24,900	20,600	18,250	15,650	10,350			360
8049-HJ	48"	3	1,084	28,150	24,200	22,250	20,150	15,650	10,950		360
8049-HK	48"	5	1,305	33,100	29,850	28,150	26,450	22,950	19,250	15,250	360
8049-HL	48"	7 1/2	1,490	38,000	35,650	33,650	32,150	29,150	26,100	22,950	360

Exclusive JBI AIR BALANCING SYSTEMS

CONSTA - FLOW™

Automatically monitors and adjusts exhaust airflow to maintain a constant booth air velocity over a range of filter loading.

Benefits:

1. Improves transfer efficiency.
2. Increases useful exhaust filter life.
3. Maintains capture velocities in booth openings.

Includes:

1. Variable frequency drives.
2. Airflow sensing section.
3. Combination differential pressure gauge and controls for monitoring and adjusting booth airflow.

CONSTA-FLOW™	
Fan size	Part Number
18"	CF-18
24"	CF-24
27"	CF-27
34"	CF-34
42"	CF-42
48"	CF-48

AUTO - BALANCE™

Designed for use on totally enclosed pressurized paint booths. Interior booth pressure is constantly monitored and the volume of exhaust air is automatically increased or decreased in relation to the supply air volume, to maintain either a positive or negative interior booth pressure.

Benefits:

1. Increased useful exhaust filter life.
2. Constant booth airflow.
3. Ability to control booth pressure.

Includes:

1. Variable frequency drives.
2. Differential pressure gauge with controls for monitoring and adjusting booth pressure.
3. Static pressure sensing probes.

AUTO-BALANCE™	
Fan size	Part Number
18"	AB-18
24"	AB-24
27"	AB-27
34"	AB-34
42"	AB-42
48"	AB-48

New exhaust fans and motors will be required on retro-fits.

ANGLE &
ASSOCIATES
LANDSCAPE & GENERAL CONTRACTORS
SITE DEVELOPMENT

3982 OLD HIGHWAY 91 POCATELLO, ID 83204
(208) 232-0136

SUBMITTAL C.S. 3/18/96

JOB: ISU PAINT SHOP BOOTH

PAINT BOOTH

(1) DOWN DRAFT CUSTOM PAINT BOOTH MANUFACTURED BY J.B.I. MODEL DD-24-SB-S WITH (1) SOLID PRODUCT DOOR, (1) MAN ACCESS DOOR, (1) 3' HIGH INTAKE PLENUM, (1) SET OF INTAKE FILTERS, (1) MAN LOAD GRATING WITH ROLL MEDIA AND (1) LOT ASSEMBLY HARDWARE ALL PER SHEETS 1 OF 2 AND 2OF 2 ATTACHED.

EXHAUST FAN

(1) EF-1 MODEL 8049-EJ 34" FAN COMPLETE W/ 3 H.P. 240/60/3 MOTOR TO EXHAUST 12,000 CFM @ 3/4" SP, BELT GUARD,TEFC MOTOR.

FRESH AIR UNIT

(1) FA-1 DUNHAM-BUSH MODEL VD-26 VERTICAL UNIT COMPLETE W/ 240/60/3 5 H.P. MOTOR TO SUPPLY 12,000 CFM @ 1" E.S.P., 1" 3/4# DENSITY INSULATION, FLAT FILTER SECTION, DISCHARGE ARRANGEMENT #4, (2) SETS OF FILTERS, L.H. MOTOR.

STEAM COIL

(1) WING IFB STEAM COIL SIZE E-60 COMPLETE W/ ELECTRIC AIR STREAM CONTROLS, AND RIGHT HAND STEAM AND CONTROL CONNECTIONS.

UNIT HEATER

(1) UH-1 DUNHAM-BUSH MODEL #250C COMPLETE W/ 254 EDR STEAM HEAT, 960 CFM, 1/20 H.P. 120/60/1 MOTOR

SPIRAL DUCT

(1) LOT 34" ROUND SPIRAL DUCT BUILT BY TEAM MECHANICAL.

RHEOS®

Commercial Smart Boiler/ Water Heater

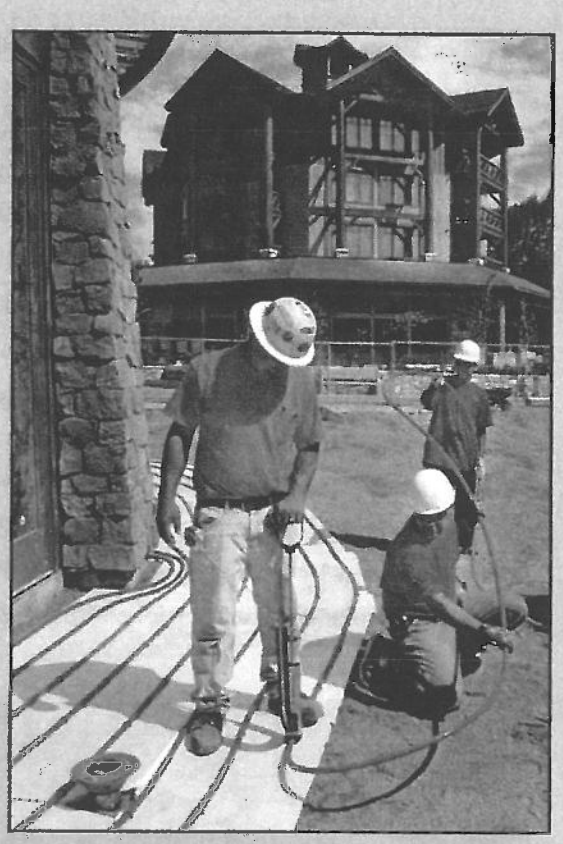

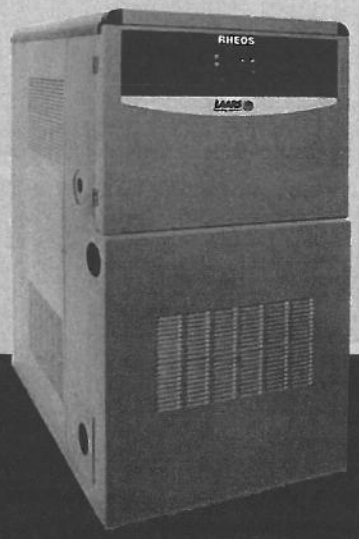

LAARS®
Heating Systems Company
A subsidiary of BRADFORD WHITE Corporation

RHEOS® Commercial Smart Boiler/Water Heater

The Rheos smart boiler / water heater is a breakthrough in commercial heating system design. Now, for the first time, engineers and heating contractors can choose a single high-efficiency, low-cost system for commercial installations requiring up to 2.4 million BTU/hour. Plus, the Rheos features the highest density and smallest footprint available, so it takes up far less floor space. In fact, it's so compact, it can fit through a standard 3'-0" doorway.

For more than 50 years, the Laars Heating Systems brand has stood for quality, reliability and innovation in heating products design. Now, Rheos builds on that tradition and sets a new standard with an entirely new generation of cutting-edge boiler technology designed especially for today's most demanding commercial environments.

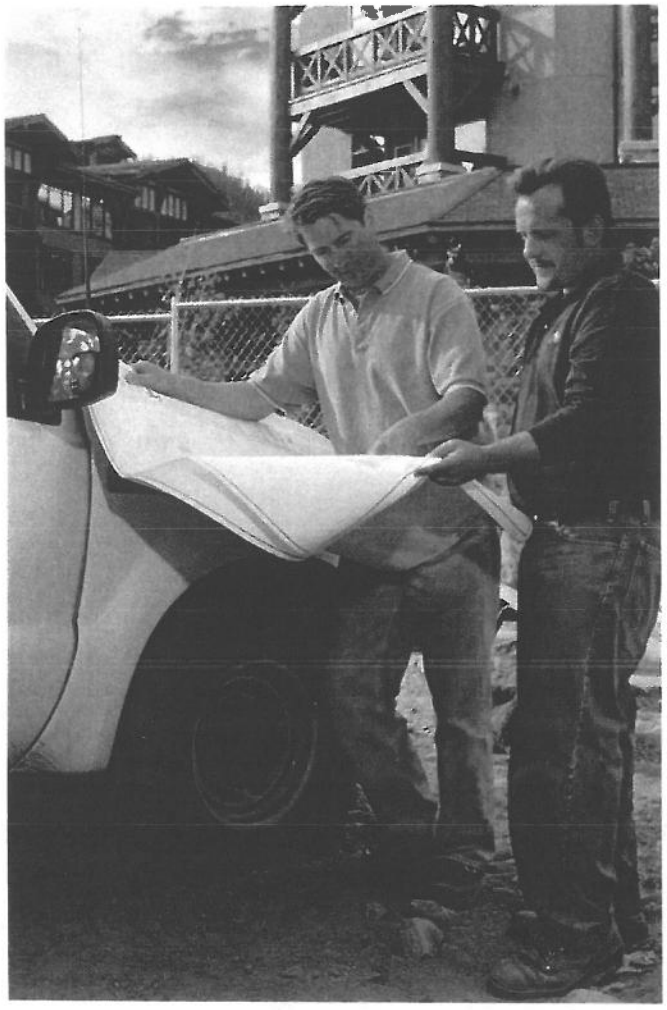

Smart boiler technology saves fuel costs

The innovative Rheos smart boiler technology controls the boiler operation by automatically down-firing to as low as 50% of full input. In addition, the system boasts an 87% combustion efficiency - one of the highest ratings in its class. Taking full advantage of high-efficiency combustion in addition to the boiler modulation, Rheos can cut operating costs by as much as 30% over conventional, non-modulating systems. The result is fuel cost savings that can amount to tens of thousands of dollars over the life of the equipment. In fact, in most installations, the Rheos will virtually pay for itself in a short period of time. Optional control packages are available to comply with regional code requirements.

Patented double-row heat exchanger

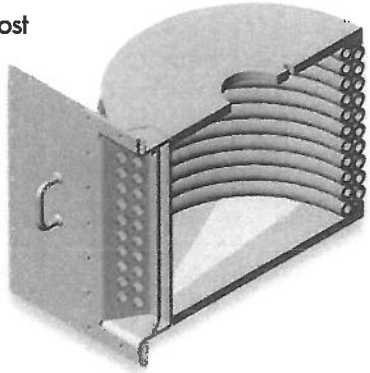

Rheos is far and away the most compact and cost-effective heating system in its rating class. The system uses a patented double-row coil configuration to create maximum heat transfer surface area and balanced water flow. Coupled with a powerful burner, the Rheos is able to provide industrial grade service for hydronic and volume water applications.

For water conditions requiring an upgrade, a cupro-nickel heat exchanger is available as an option.

Compact and easy to install indoors or out

The greatest advantage to the heating contractor is that Rheos is as simple to install for replacement, as it is for new construction. Convenient right or left-hand piping configurations make installing even easier. Because of its compact size, the Rheos boiler / water heater fits virtually anywhere. The same boiler can be installed either indoors or outdoors. A special gas train heating unit ensures reliable operation outdoors in cold climates. The unit measures just under 34½ inches wide.

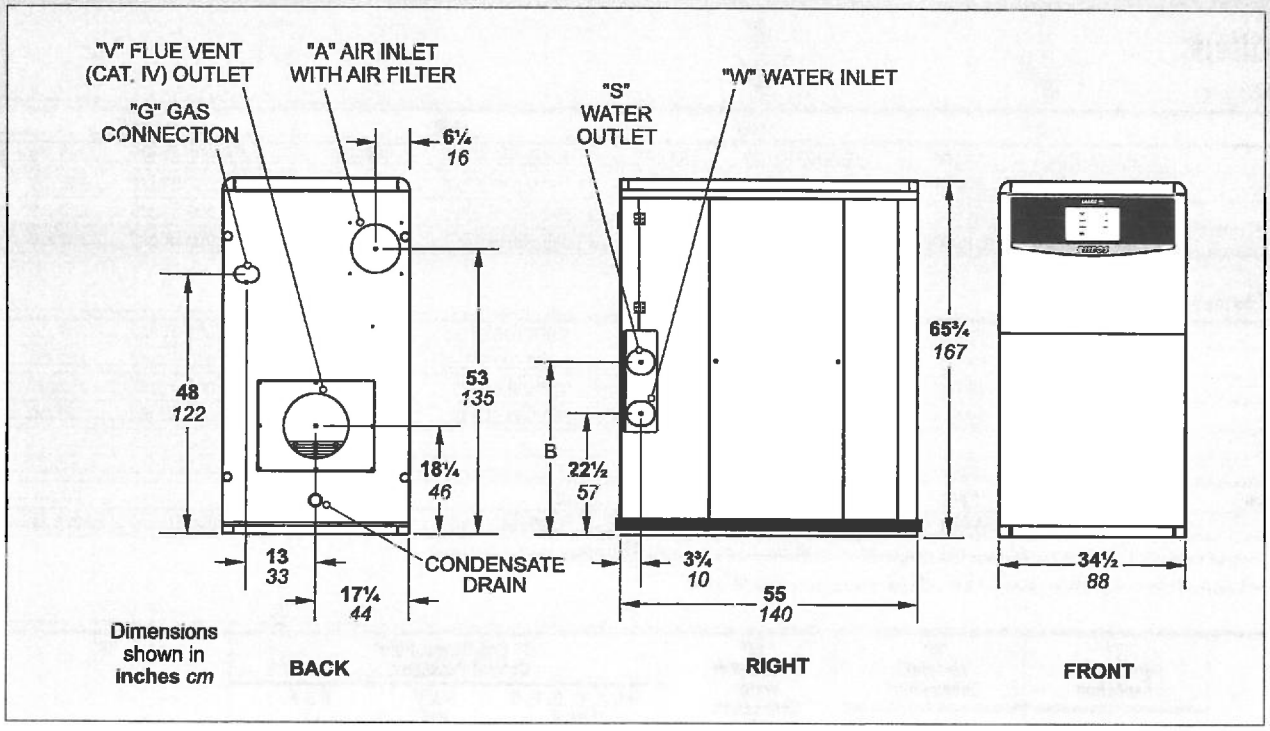

Sealed combustion system uses no inside air
Rheos also solves the problem of inside air depletion by using a completely sealed combustion system with a high-power blower that draws all combustion air from the outside and vents flue gases simultaneously. Intake air is passed through a permanent filter, which is easily removed from the front for cleaning. Rheos can be installed inside or outside, even on the roof. Because of its versatile design, it can be vented through the roof or a sidewall.

Low NOx and high efficiency certified in all 50 states and Canada
Rheos is also one of the "greenest" and most environmentally sound heating systems in the marketplace. It offers extremely low levels of both NOx and CO greenhouse gases and is fully certified for commercial use in all 50 states and Canada, meeting ASHRAE 90.1, ANSI Z21.13 and ANSI Z21.10.3 codes. It also meets all domestic and international codes and regulations for greenhouse gas emissions. In addition, Rheos has been designed to meet or exceed the efficiency and pollution standards used by the gas utility industry for environmental rebates and commercial incentive programs for noncondensing equipment.

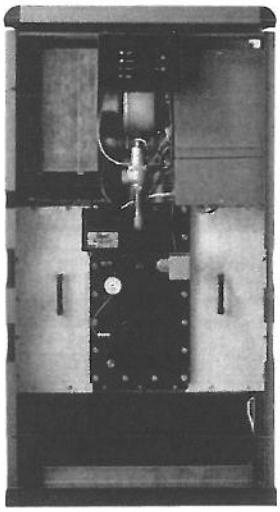

High Efficiency The sophisticated gas and air introduction system, combined with a powerful low-NOx burner and patented heat exchanger, allows the Rheos to maintain its high efficiency throughout its modulation range.

Standard Features

- Modulating proportional firing control system (50- 100%)
- All waterways are copper or glass-lined
- Low-water cutoff with test light and manual reset button
- Manual reset high-limit
- High gas pressure switch
- Low gas pressure switch
- Air pressure switch
- ASME CSD-1
- Water flow switch
- Vertical or horizontal venting options (Category IV)
- Pump time delay
- Low-fire start time delay
- 160 lb. w.p. heat exchanger
- 75 psi pressure relief valve (boiler)
- 125 psi pressure relief valve (water heater)
- Temperature and pressure gauge
- Low water volume heat exchanger
- Washable combustion air filter
- Dry alarm contacts
- Diagnostic and status indicator lights
- Easy seismic securing
- Selector switch for internal or external (0-10 VDC) control
- Weatherproof jacket for outdoor installations

B18 B36

Specifications

Model RHCH Boiler

Size	1200		1600		2000		2400	
Input, High Fire	1,200,000 BTU/h	*352 kW*	1,600,000 BTU/h	*469 kW*	1,999,000 BTU/h	*586 kW*	2,400,000 BTU/h	*703 kW*
Output, High Fire	1,032,000 BTU/h	*302 kW*	1,376,000 BTU/h	*403 kW*	1,719,000 BTU/h	*504 kW*	2,064,000 BTU/h	*605 kW*
Input, Low Fire	600,000 BTU/h	*176 kW*	800,000 BTU/h	*234 kW*	999,500 BTU/h	*293 kW*	1,200,000 BTU/h	*352 kW*
Output, Low Fire	516,000 BTU/h	*151 kW*	688,000 BTU/h	*202 kW*	859,500 BTU/h	*252 kW*	1,032,000 BTU/h	*302 kW*

Model RHCV Water Heater

Input, High Fire	1,200,000 BTU/h	*352 kW*	1,600,000 BTU/h	*469 kW*	1,999,000 BTU/h	*586 kW*	2,400,000 BTU/h	*703 kW*
Output, High Fire	1,020,000 BTU/h	*299 kW*	1,360,000 BTU/h	*398 kW*	1,700,000 BTU/h	*498 kW*	2,040,000 BTU/h	*598 kW*
Input, Low Fire	600,000 BTU/h	*176 kW*	800,000 BTU/h	*234 kW*	999,500 BTU/h	*293 kW*	1,200,000 BTU/h	*352 kW*
Output, Low Fire	510,000 BTU/h	*149 kW*	680,000 BTU/h	*199 kW*	850,000 BTU/h	*249 kW*	1,020,000 BTU/h	*299 kW*

Vent Size (Cat. IV)	6"	*15 cm*	6"	*15 cm*	7"	*18 cm*	10"	*25 cm*
Combustion Air Size	6"	*15 cm*	8"	*20 cm*	8"	*20 cm*	8"	*20 cm*
Shipping Weight	1220 lbs	*554 kg*	1265 lbs	*574 kg*	1295 lbs	*588 kg*	1350 lbs	*613 kg*

Important Note: output shown is based on certification test standards. The efficiency of this unit will increase with lower return water temperature and/or lower modulation point, which will alter the output of the Rheos+.

Size	"V" Vent Outlet Connection		"A" Air Inlet Connection		"W" Inlet/Outlet Water Connection NPT	"G" Gas Connections Control Packages			"B"	
	in.	*cm*	in.	*cm*		Std, A, C, D, F, G Nat/LP NPT	B & E Nat NPT	B & E LP NPT	In.	*cm*
1200	6	*15*	6	*15*	2½	1	1½	1½	34¼	*87*
1600	6	*15*	8	*20*	2½	1½	2	2	34¼	*87*
2000	7	*18*	8	*20*	3	1½	2	2	34¼	*87*
2400	10	*25*	8	*20*	3	1½	2	2	32	*81*

Water Flow

Temperature Rises in Degrees

RHCH Boiler Size	20°F Flow GPM	20°F H/L Feet	25°F Flow GPM	25°F H/L Feet	30°F Flow GPM	30°F H/L Feet	*11°C Flow lpm*	*11°C H/L m*	*14°C Flow lpm*	*14°C H/L m*	*17°C Flow lpm*	*17°C H/L m*
1200	103	18	83	12	69	8.0	*391*	*5.5*	*313*	*3.7*	*260*	*2.4*
1600	138	22	113	14	92	9.7	*521*	*6.7*	*417*	*4.3*	*347*	*3.0*
2000	172	20	138	13	115	8.8	*651*	*6.1*	*521*	*4.0*	*434*	*2.7*
2400	206	18	165	12	138	8.0	*781*	*5.5*	*625*	*3.7*	*521*	*2.4*

Note: Maximum temperature rise is 30°F (17°C), as shown. Headloss is for boiler's heat exchanger only.

Clearances

Appliance Surface	Clearance From Combustible Material		Service Access Clearance	
Piping Side	1"	*2.5 cm*	18"	*46 cm*
Opposite Side	1"	*2.5 cm*	1"	*2.5 cm*
Top	1"	*2.5 cm*	24"	*61 cm*
Back	1"	*2.5 cm*	36"	*91 cm*
Front	1"	*2.5 cm*	36"	*91 cm*
Vent	Per UL1738 venting system supplier's instructions*			

Water Flow

RHCV Water Heater Size	HARD WATER						NORMAL WATER						SOFT WATER					
	Flow GPM	H/L Feet	Temp. Rise °F	*Flow lpm*	*H/L m*	*Temp. Rise °C*	Flow GPM	H/L Feet	Temp. Rise °F	*Flow lpm*	*H/L m*	*Temp. Rise °C*	Flow GPM	H/L Feet	Temp. Rise °F	*Flow lpm*	*H/L m*	*Temp. Rise °C*
1200	104	18	20	*395*	*5.5*	*11*	84	12	25	*316*	*3.7*	*14*	70	8.0	30	*264*	*2.4*	*17*
1600	164	29	17	*620*	*8.8*	*9*	133	20	21	*502*	*6.1*	*12*	90	8.9	31	*340*	*2.7*	*17*
2000	183	22	19	*693*	*6.7*	*11*	151	15	23	*573*	*4.6*	*13*	99	6.6	35	*376*	*2.0*	*19*
2400	209	18	20	*791*	*5.5*	*11*	167	12	25	*632*	*3.7*	*14*	139	8.0	30	*527*	*2.4*	*17*

Note: Soft water: 1 to 7.5 grains per gallon. Normal water: 7.6 to 17 grains per gallon. Hard water: More than 17 grains per gallon.

Recovery Data

GPH *L/h* Delivered

Size	40°F GPH	*22°C L/h*	50°F GPH	*28°C L/h*	60°F GPH	*33°C L/h*	70°F GPH	*39°C L/h*	80°F GPH	*44°C L/h*	90°F GPH	*50°C L/h*	100°F GPH	*56°C L/h*	120°F GPH	*67°C L/h*	140°F GPH	*78°C L/h*
1200	3061	*11571*	2449	*9257*	2041	*7714*	1749	*6612*	1531	*5786*	1361	*5143*	1224	*4629*	1020	*3857*	875	*3306*
1600	4082	*15429*	3265	*12343*	2721	*10286*	2332	*8816*	2041	*7714*	1814	*6857*	1633	*6171*	1361	*5143*	1166	*4408*
2000	5102	*19286*	4082	*15429*	3401	*12857*	2915	*11020*	2551	*9643*	2268	*8571*	2041	*7714*	1701	*6429*	1458	*5510*
2400	6122	*23143*	4898	*18514*	4082	*15429*	3499	*13224*	3061	*11571*	2721	*10286*	2449	*9257*	2041	*7714*	1749	*6612*

[redacted]

Appendix B: Bldg 71- Boiler 18 (B18)
Bldg 65- Boiler 36 (B36)

Rheos Hydronic Boiler

Model RHCH 1200-2400 Indoor/Outdoor

Specification

Date: Bid Date:

Project #: Location:

Project Name: Engineer:

Contractor: Prepared By:

[redacted]

Contractor shall supply and install Qty.: _____ Laars Model No. RHCH_____ boiler(s).

The boiler shall be a Laars Rheos Model RHCH_____, modulating, sealed combustion, Category IV (condensing) boiler with a modulating input and output rate as shown on the schedule. The Rheos hydronic boiler shall have a combustion efficiency of 87%.

The Rheos shall be design certified to comply with the current edition of the Harmonized ANSI Z21.13 / CSA 4.9 Standard for Gas-Fired Low Pressure Steam and Hot Water Boilers. The Rheos shall be designed and constructed in accordance with the ASME Boiler & Pressure Vessel Code, Section IV requirements for 160 psi (1103 kPa) working pressure.

The Rheos shall be capable of normal operation and full input with supply gas pressure as low as 4" w.c. Boiler shall automatically compensate for large fluctuations of gas supply pressure between 4" w.c. and 13" w.c.

The water tube heat exchanger shall be a vertical round design, with 7/8" (22mm) inner diameter integral finned copper tubes. The tubes shall be rolled directly into lined ASME headers rated for 160 psi (1103 kPa) working pressure. All waterways shall be non-ferrous. The heat exchanger shall be a low water volume design. All gaskets shall be non-metallic, and separated from the combustion chamber by at least 3.5" (89mm) to eliminate deterioration from heat. Headers shall have covers permitting visual inspection and cleaning of all internal surfaces.

The piping side header shall have threaded nipples to facilitate maintenance and permit removal of complete heat exchanger for service or replacement. The heat exchanger shall be removable from the front of the unit, without extensive disassembly of the Rheos' combustion chamber.

The boiler shall use a proven hot surface ignition with a 15 second pre-purge cycle to clear the venturi assembly and combustion chamber. Rheos shall start in low fire, and shall remain in low fire for 15-seconds at the start of each cycle. Rheos shall be 120V, single phase, 20A.

The burner shall be cylindrical type with woven metal fiber to provide a cleaner, more complete fuel combustion and low NOx emissions, not exceeding 10 PPM.

The combustion chamber shall be compact, utilizing a lightweight alumina-silica insulation tile board rated to 2200°F (1204°C). The outer jacket shall be a unitized shell finished with acrylic thermo-set paint baked at a temperature not less than 325°F (163°C).

The frame shall be constructed of 2" x 2" x 11 gauge box steel. The flue collector shall be constructed of 10 gauge steel for strength and durability.

The jacket shall have access panels on each side of the Rheos, to facilitate inspection and service of internal components. The flue collector shall have an access panel to allow inspection of the outside of the finned copper heat exchanger tubes.

The boiler shall have a forced draft design that is capable of precisely mixing the air and gas to achieve a minimum 87% steady-state combustion efficiency. The Rheos shall employ a pre-mix fan that is approved for use with flammable gas and air mixtures. The air intake will use single-wall galvanized steel pipe, 24 gauge minimum, to a maximum of 50 linear feet with a maximum of 5 elbows. The Rheos shall be designed for vertical venting or for horizontal direct venting applications using stainless steel vent. Venting applications will use type AL29-4C stainless steel pipe to a maximum of 50 linear feet with a maximum of 5 elbows. The venting configuration for direct combustion air and/or direct exhaust venting shall be installed using the Laars optional vent connector(s.)

The boiler gas train shall be for modulating firing and shall consist of a safety gas valve and a gas-air ratio control valve that precisely controls the air and gas mixture, and enables the Rheos to modulate, to closely match heat load conditions.

The boiler shall be provided with an integral, washable combustion air filter. The air filter shall provide 83% arrestence to protect the burner and blower from debris. The air filter shall be constructed out of open cell polyurethane foam. The air filter shall be mounted in the Rheos, and shall be intended for permanent use in the unit, (not only for the construction phase of the project).

The boiler shall be built with a selector switch which enables the user to choose between the unit's mounted modulation control and a labeled terminal strip for connection to an external 0-10VDC control source (such as a building automation system or multiple boiler controls). The boiler shall have dry alarm contacts for ignition failure, and shall have the following diagnostic lights: Amber light to indicate power on; Amber light to indicate a call for heat; Amber light to indicate that the unit is in pre-purge; Green light to indicate that the main gas valve has been energized; Red light to indicate ignition failure.

The boiler shall include, as standard equipment, the following controls and trim:

- Flow Switch
- Electronic Low Water Cut-Off complete with test light and manual reset button
- Manual reset high limit
- High gas pressure switch
- Low gas pressure switch
- Air pressure switch
- Pump time delay
- Low-fire start time delay
- Selector switch for internal or external (0-10VDC) control
- 75 psi (517 kPa) ASME rated Pressure relief valve
- Temperature and pressure gauge

LAARS Heating Systems Company
A subsidiary of BRADFORD WHITE Corporation

800.900.9276 • Fax 800.559.1583 ***(Customer Service, Service Advisors)***
20 Industrial Way, Rochester, NH 03867 • 603.335.6300 • Fax 603.335.3355 ***(Applications Engineering)***
1869 Sismet Road, Mississauga, Ontario, Canada L4W 1W8 • 905.238.0100 • Fax 905.366.0130
www.Laars.com

Litho in U.S.A. © Laars Heating Systems 0810 Document 5084-42C

ISU RENDEZVOUS BOILER

PRECISION BOILERS

FPS VERTICAL FIRETUBE STEAM BOILER

DIMENSIONAL DATA

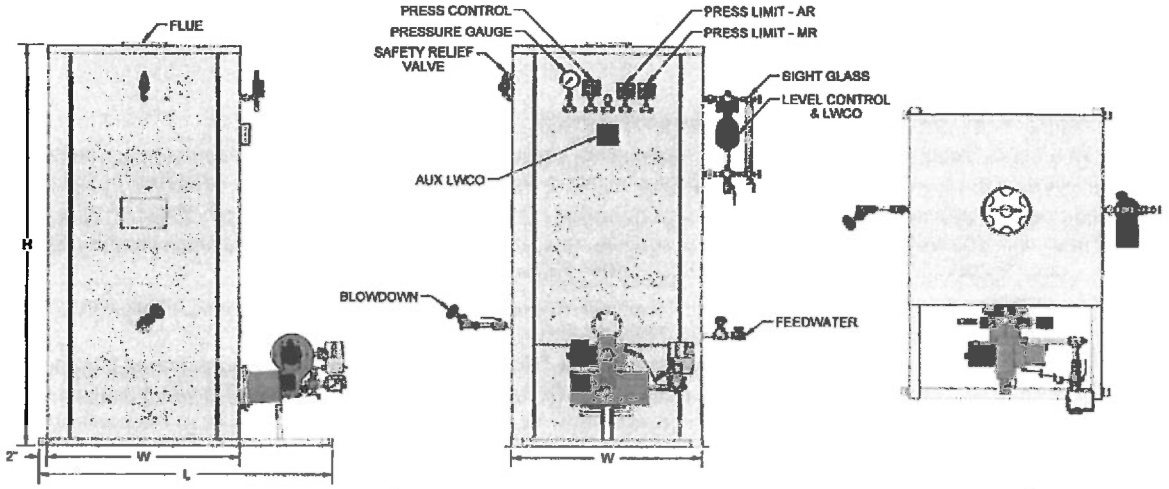

LEFT FRONT TOP

NOTE: MINIMUM OF 18" CLEARANCE AROUND BOILER.

PHYSICAL DATA

MODEL NUMBER	NOM BOILER HP	RATED INPUT MBTU	NOM OUTPUT PPH*	VESSEL DIMS (IN.) DIA	VESSEL DIMS (IN.) HEIGHT	WATER VOL** (GAL)	OVERALL DIMENSIONS (IN.) W	OVERALL DIMENSIONS (IN.) L***	OVERALL DIMENSIONS (IN.) H	CONNECTIONS (NPT) FEED WATER	BLOWDOWN 15PSI	BLOWDOWN 150PSI	STEAM OUTLET 15PSI	STEAM OUTLET 150PSI	FLUE SIZE	BURNER BLOWER HP (GAS)
FPS-24-06	6	250	210	24	45	52	28	50	80	3/4"	1"	1"	1-1/2"	1"	6"	1/4
FPS-24-09	9.5	400	330	24	54	64	28	50	91	3/4"	1"	1"	1-1/2"	1"	6"	1/4
FPS-24-10	10	420	340	24	57	69	28	50	94	3/4"	1"	1"	1-1/2"	1"	6"	1/4
FPS-31-15	15	630	520	31	48	88	35	57	85	3/4"	1"	1"	2"	1"	8"	1/4
FPS-31-20	20	840	690	31	60	117	35	57	97	3/4"	1"	1"	2"	1"	8"	1/3
FPS-39-20	20	840	690	39	45	128	43	65	80	3/4"	1"	1"	2-1/2"	1-1/4"	8"	1/3
FPS-39-25	25	1,050	880	39	52	156	43	65	89	3/4"	1"	1"	2-1/2"	1-1/4"	10"	1/3
FPS-39-30	30	1,260	1,030	39	60	188	43	65	97	3/4"	1"	1"	3"	1-1/2"	10"	1/3
FPS-46-35	35	1,470	1,210	46	48	196	50	76	83	3/4"	1-1/4"	1"	3"	1-1/2"	12"	1/3
FPS-46-40	40	1,674	1,370	46	52	218	50	76	89	3/4"	1-1/4"	1"	3"	1-1/2"	12"	1/3
FPS-58-50	50	2,110	1,730	58	52	275	62	88	87	1"	1-1/4"	1"	4"FF##	2"	12"	1/3
FPS-58-60	60	2,500	2,050	58	60	332	62	96	95	1"	1-1/4"	1"	4"F	2"	14"	1
FPS-58-72	72	3,000	2,460	58	64	336	62	96	101	1"	1-1/4"	1"	4"F	2"	14"	1
FPS-62-72	72	3,000	2,460	62	56	312	66	106	91	1"	1-1/4"	1"	4"F	2"	14"	1
FPS-62-84	84	3,500	2,870	62	64	378	66	106	101	1"	1-1/2"	1"	4"F	2-1/2"	16"	1-1/2#
FPS-62-100	100	4,200	3,440	62	64	329	66	106	105	1"	1-1/2"	1"	6"F	3"F	16"	1-1/2#

*From and At 212°F.
**Actual Operating; multiply by 1.3 to obtain approximate flooded volume

***Dependent on burner stick-out; Dimension given is for Power Flame burners
# Indicates 3-phase blower (includes stepdown transformer for burner controls)
Indicates Flanged Connection (150#RF)

HOW TO SELECT A MODEL NUMBER

FPS - 62 - 100 - 150 - P - N

- **FPS** — Vertical Firetube Steam Boiler
- **62** — Vessel Diameter
- **100** — Horse Power
- **150** — Pressure
- **P** — Burner: B=Beckett, P=Power Flame, W=Wayne, X=Other
- **N** — Fuel: N=Natural Gas, P=Propane, L=Light Oil, C=Combonation

PRECISION BOILERS
5727 Superior Drive
Morristown, TN. 37814
Office (423) 587-9390 / Fax (423)581-7749
Email: bmowl@precisionboilers.com

QUOTATION

Revisit February 8, 2013

To: Midgley-Huber
Job:
Attention: Kent

Date: July 9, 2012
Quote#11630bm

PRECISION Model "FPS" Vertical Firetube Steam Boilers

PRECISION Model FPS-58-60-150-P2500NLN (Vertical Firetube Steam Boiler)

- ASME Code pressure vessel w/ National Board registration,
- 60 HP,
- 150 PSI design ASME,
- 460 volt/ 3ph blower motor with step-down control transformer,
- Modulating gas valve / **4500 ft elevation / 30 PPM NOX (FGR)**
- ***POWER FLAME BURNER (MODEL LNICR2-G-20B)***
- Pressure controller,
- High pressure safety,
- ASME safety valve,
- Pressure gauge w/ cock,
- Feedwater stop/check valves,
- Full port bottom blowdown valve(s),
- Combination float-type level control / Lwco with blowdown valve,
- Water level sight gauge with blowdown valve,
- Aux Manual reset probe-type Lwco w/pilot light,
- Manual surface blow-off valve provision,
- UL, CSD-1
- Other standard features.

Power Flame Incorporated
2001 South 21st Street, Parsons, Kansas 67357
Telephone 620-421-0480, Fax 620-421-0948
Web Site: www.powerflame.com
E-Mail: csd@ powerflame.com

February 8, 2013

Precision Boilers
P.O. Box 1527
3524 East Fourth Street
Hutchinson, KS 67504-1527

Attn: William Boyle

Subj: Low NOx emissions guarantee

Dear William:

Our LNICR2-G-20B burner is designed to meet sub 0.079 LB/MMBTU (60 PPM) Nox emissions when firing natural gas. The burner utilizes induced flue gas recirculation to achieve low NOx results. Over 3000 of these burners have been successfully installed over the past ten years. This burner will maintain these NOx levels under normal use and with standard maintenance.

As with all Power Flame low NOx products, we will guarantee the emission performance of the burner, in this case 0.079 NOx and < 50 PPM CO, when commissioned by a qualified service technician and installed in the Precisions standard design vertical firetube boilers. We also offer our standard product warranty relative to defects in workmanship or component failures that extends 15 months from the date of shipment or 12 months from the date of start-up, whichever occurs sooner.

We appreciate your interest in Power Flame products and trust we will have the opportunity to provide the burners for your project. Please feel free to contact us if you have any additional questions or concerns.

Sincerely,

POWER FLAME INCORPORATED

Ronita Spriggs
Ronita Spriggs

MURPHY-RODGERS

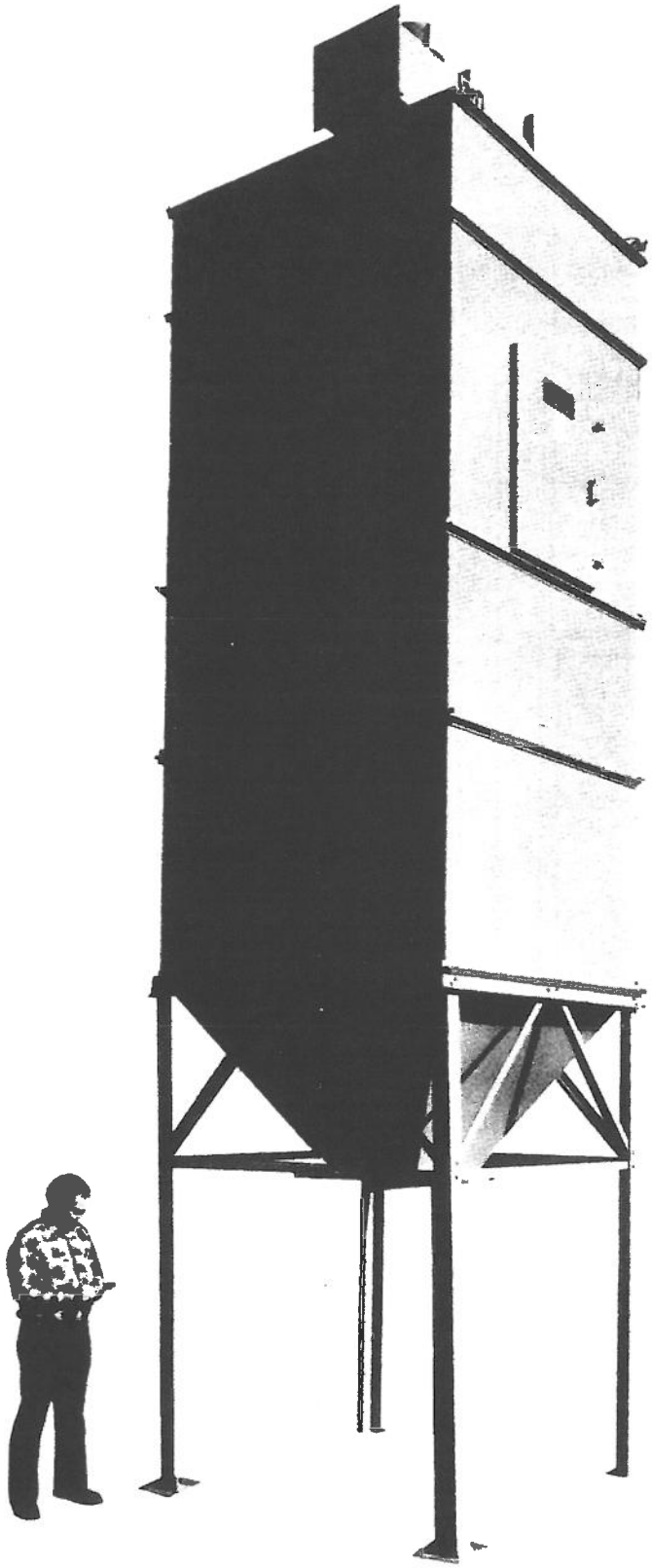

MODEL MRA DUST COLLECTOR

MURPHY-RODGERS MODEL MRA DUST COLLECTOR PHYSICAL DIMENSIONS

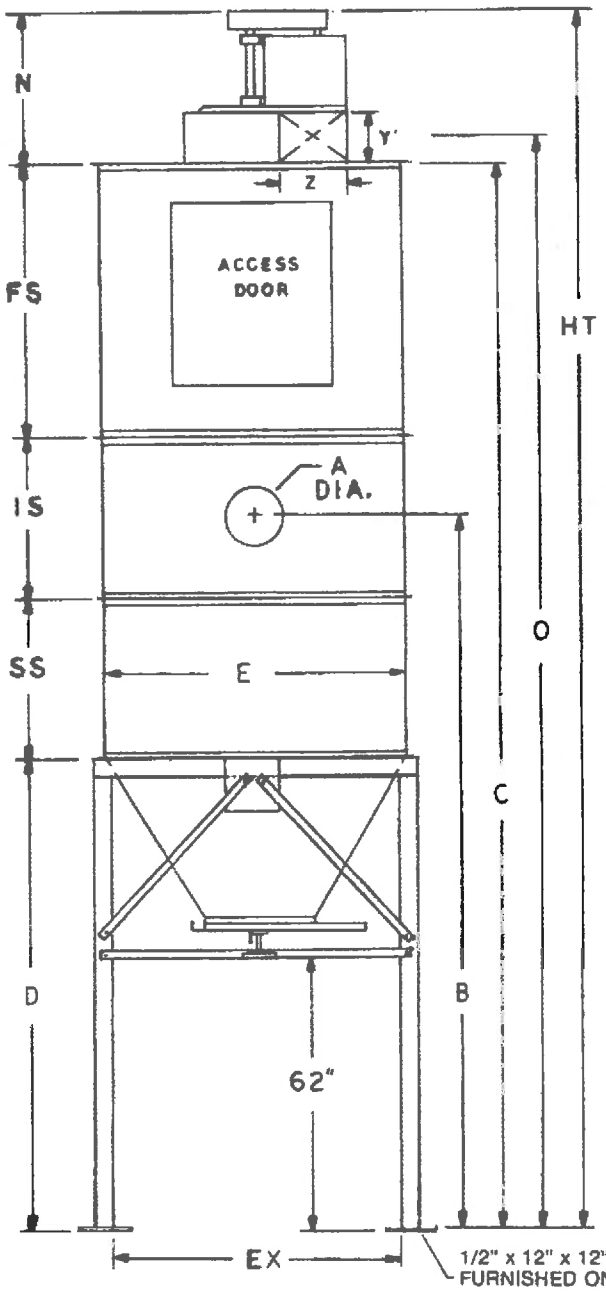

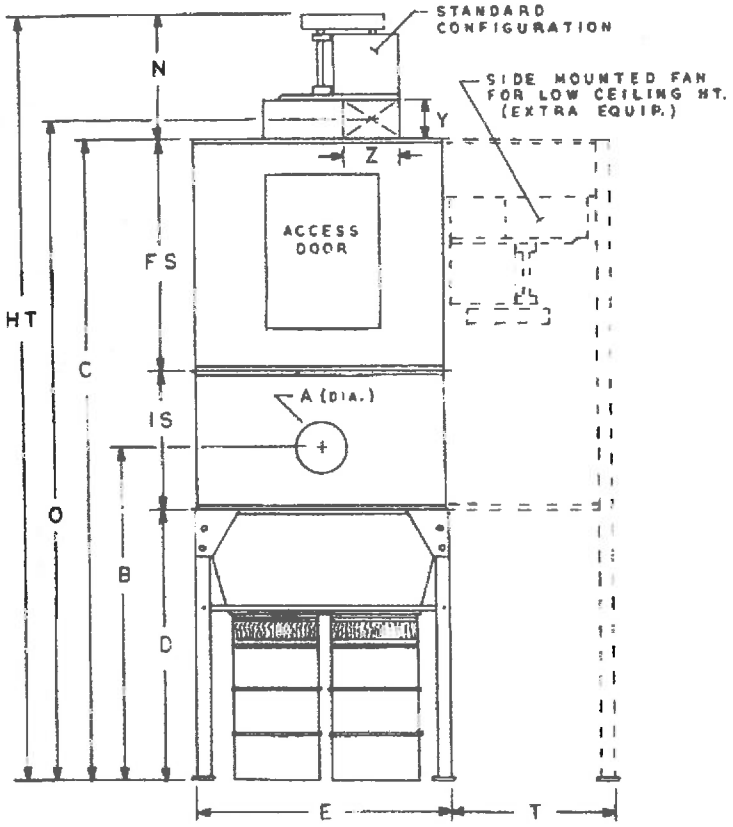

SPECIFICATIONS (Subject to change without notice)

MODEL NO.	INLET A	SQ. FT. CLOTH	DIMENSIONS														SHIP. WT. W/STAND
			B	C	D	E	EX	FS	HT	IS	N	O	SS	T	Y x Z		
MRA-11-4D	11	427	95½	175	77	68	63	61	207½	37	32½	179½	—	42	9 1/16	11	2405
MRA-13-4D	13	528	95½	187	77	68	63	73	222	37	35	192¼	—	47	10½	13	2625
MRA-15-4D	15	668	96½	188	78	76	71	73	225⅝	37	37⅝	194	—	53	12⅛	15	3158
MRA-17-4D	17	825	103½	195	85	84	78	73	235¼	37	40¼	201⅞	—	58	13¾	17	3995
MRA-11-120H	11	427	159½	239	104	68	65	61	271½	37	32½	243½	37	—	9 1/16	11	3990
MRA-13-120H	13	528	159½	251	104	68	65	73	286	37	35	256¼	37	—	10½	13	4271
MRA-15-185H	15	668	178½	270	111	76	73	73	307⅝	37	37⅝	276	49	—	12⅛	15	5085
MRA-17-240H	17	825	188½	280	121	84	77	73	320¼	37	40¼	286⅞	49	—	13¾	17	6690
MRA-20-405H	20	1,219	225½	334	155	92	120	87	379⅜	43	45⅜	341¼	49	—	15⅜	19	8228
MRA-22-435H	22	1,414	233	339½	162½	98	120	85	388½	43	49	348	49	—	17	21	9716

(REVISED 10/89)

MODEL MRA WITH ROTARY AIR LOCK AND STAND

The Model MRA Dust Collector can be supplied with a Rotary Air Lock for continuous unloading of the waste material into a dumpster, or other type of receptacle. The Rotary Air Lock **CANNOT** be used below a storage bin, as bridging will occur with the build-up of material above the air lock.

Larger stands, or stand with higher clearance can be furnished to suit individual requirements. Contact the Factory for special pricing.

Stands are shipped K.D. from the Factory, and are equipped with pre-drilled holes and bolts to facilitate erection on the job site. Stands **MUST** be securely welded at all points on the job site by the erector. Failure to provide proper welding will result in a weakened supporting stand.

Proper concrete pier footings should be provided for support of the legs. Pier foundation drawings are available upon request. The base plates for the legs are to be provided on the job site, and these must be surely anchored to the pier footings.

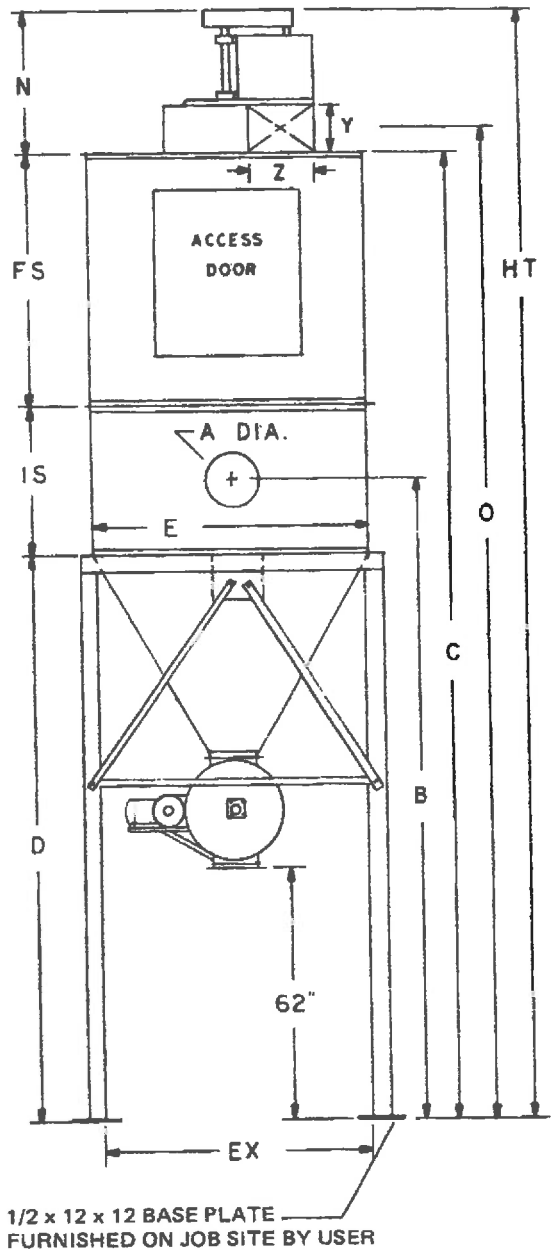

SPECIFICATIONS (Subject to change without notice)

MODEL NO.	INLET A	DIMENSIONS										SQ. FT. CLOTH	OUTLET Y x Z		SHIP. WT. W/ STAND
		B	C	D	E	EX	FS	HT	IS	N	O				
MRA-11-RAL	11"	162½"	242"	144"	68"	65"	61"	274½"	37"	32½"	246½"	427	9 1/16"	11"	4102
MRA-13-RAL	13"	162½"	254"	144"	68"	65"	73"	289"	37"	35"	259¼"	528	10½"	13"	4383
MRA-15-RAL	15"	160½"	252"	142"	76"	73"	73"	289⅝"	37"	37⅝"	258"	668	12⅛"	15"	4993
MRA-17-RAL	17"	171"	262½"	152½"	84"	77"	73"	302¾"	37"	40¼"	269½"	825	13¾"	17"	5385
MRA-20-RAL	20"	184 "	292½"	162½"	92"	85"	87"	337⅞"	43"	45⅜"	300¼"	1219	15⅝"	19"	7780
MRA-22-RAL	22"	189"	295½"	167½"	98"	91"	85"	344½"	43"	49"	304"	1414	17"	21"	8160

(REVISED 9/89)

MODEL MRA DUST COLLECTOR

FEATURES . . .

- Highly efficient performance.
- Fits into low ceiling areas, yet takes up minimal amount of floor space.
- Can be installed inside a building as well as outside.
- Quiet operation.
- Easy to empty the collected waste.
- Flexible in design with capacities to fit all types of operations.
- Practically no maintenance.
- Totally enclosed in steel for fire protection and filter section protection.
- A good appearance.
- Completely self-contained.
- Easily installed by inexperienced personnel.
- Manual shaking mechanism (standard equipment).
- High performance on all types of dust particles.
- 2,500 to 12,500 cfm.
- Easy operation.
- All sections of the unit readily accessible.
- Not damaged by large pieces of material drawn into the unit through the exhaust system.
- Handles hot particles in metalworking trade.
- Shipped completely assembled (std. version).
- Flexible cfm ratings for top performance.
- Low initial cost.
- Primary separator.
- Secondary multi-bag type filtration.
- Retains warm air in plant.
- Equalized pressure in building.

The Murphy-Rodgers Model MRA Dust Collector is ideally suited for schools or small industrial applications where large volumes of air are required for relatively small amounts of dust collected. This unit is primarily designed for limited ceiling height installations, when used as an indoor installation.

The Model MRA is divided in four basic sections: (1) the top section with exhauster fan, motor and drives (2) the filter bag section with bag shaker frame (3) the in-let section with primary separator (4) the storage section for collecting the waste material.

The material enters the unit through the in-let and into the primary separator which removes the heavy particles. The air passes into the section immediately above, where bag type filters are used for secondary filtration of fine particles. Various filter media are available for a wide range of applications. This double acting system gives an extremely high efficient type of dust collector at a relatively low initial cost.

The material storage area and the secondary filtration section are accessible through large access doors which allow for easy material removal and bag maintenance of the unit. The Model MRA is part of the series of bag collectors designed by Murphy-Rodgers in which modular construction methods and parts are used to create a highly efficient unit at economical prices.

The unit requires a minimum of maintenance. All parts which must be maintained are very easily accessible.

The MRA comes ready to operate, requiring only connection to a power source through a starter, and connecting the piping to the unit. It features rugged construction and a convenient storage compartment with easy removal of the collected material. All components are shipped assembled, forming a single, completely self-contained collector.

Air to cloth ratios can be changed for extremely difficult types of material handling, although the standard unit is designed for proper efficiency in most woodworking applications. Hopper type storage sections are available for certain installations. Electric motor driven shakers and automatic shaking mechanisms are available for the secondary bag filtration section.

MODEL MRA WITH TRUCK TYPE STAND

THE MODEL MRA DUST COLLECTOR CAN BE SUPPLIED WITH A TRUCK TYPE STAND AS **EXTRA** EQUIPMENT. NOMINAL DIMENSIONS CALL FOR 120" CLEARANCE BETWEEN THE SUPPORTING LEGS, AND 132" FROM GROUND LEVEL TO GATE DISCHARGE LOCKING HANDLE. ALTHOUGH NOT SHOWN ON THE DRAWING TO THE RIGHT, ADEQUATE BRACING IS FURNISHED ON ALL FOUR SIDES OF THE STAND.

LARGER SIZES OF SUPPORTING STANDS CAN BE FURNISHED TO SUIT INDIVIDUAL REQUIREMENTS. CONTACT THE FACTORY FOR SPECIAL PRICING.

IT SHOULD BE NOTED THAT BOTH DUMPSTER TYPE AND TRUCK TYPE SUPPORTING STANDS ARE SHIPPED K.D. FROM THE FACTORY. THESE STANDS ARE EQUIPPED WITH PRE-DRILLED HOLES AND BOLTS TO FACILITATE ERECTION ON THE JOB SITE. BOTH TYPES STANDS **MUST** BE SECURELY WELDED AT ALL POINTS ON THE JOB SITE BY THE ERECTOR. FAILURE TO PROVIDE PROPER WELDING WILL RESULT IN A WEAKENED SUPPORTING STAND.

PROPER CONCRETE PIER FOOTINGS SHOULD BE PROVIDED FOR SUPPORT OF THE LEGS. PIER FOUNDATION DRAWINGS ARE AVAILABLE UPON REQUEST. THE BASE PLATES FOR THE LEGS ARE TO BE PROVIDED BY THE USER ON THE JOB SITE, AND THESE MUST BE SECURELY ANCHORED TO THE PIER FOOTINGS.

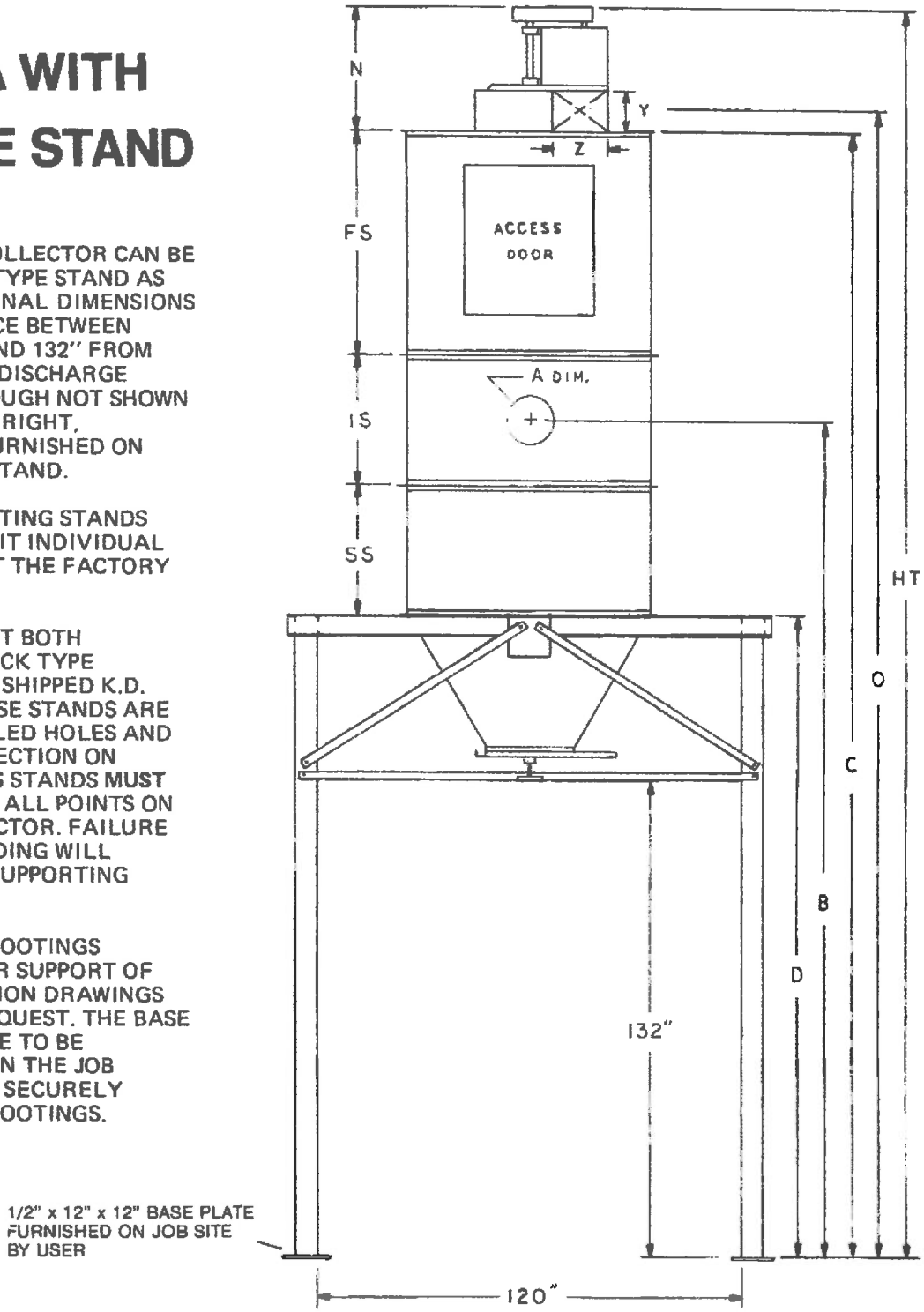

SPECIFICATIONS

(Subject to change without notice)

MODEL NUMBER	INLET	DIMENSIONS									OUTLET		SHIP. WT. W/STAND
	A	B	C	D	FS	HT	IS	N	O	SS	Y x Z		
MRA-11-120H	11	229½	309"	174"	61"	341½"	37"	32½"	313½"	37"	9 1/16"	11"	5244
MRA-13-120H	13	229½	321"	174"	73"	356"	37"	35"	326¾"	37"	10½"	13"	5495
MRA-15-185H	15	248½	340"	181"	73"	377⅝"	37"	37⅝"	346"	49"	12⅛"	15"	6498
MRA-17-240H	17	258½	350"	191"	73"	390¼"	37"	40¼"	356⅞"	49"	13¾"	17"	7882
MRA-20-405H	20	295½	404"	225"	87"	449⅜"	43"	43⅜"	411¼"	49"	15⅜"	19"	8520
MRA-22-435H	22	303	409½"	232½"	85"	458½"	43"	49"	418 "	49"	17"	21"	9990

(REVISED 9/89)

STANDARD EQUIPMENT, Basic Model MRA Dust Collector

Primary separator built into the unit. Secondary separation of fine particles by filter bag section. Belted motor driven exhaust fan with 3 phase, 60 cycle, 230/460 volt, open drip proof motor. NO controls furnished. Floor level storage section for 55 gallon drums (no drums included). Belt guard.

EXTRA EQUIPMENT

SILENCER ..... The Model MRA has a very low noise level, made even quieter by the use of a silencer.

LOW CEILING MODIFICATION. The unit is designed for low ceiling installation. The fan and motor unit is mounted alongside of the unit, permitting installation in much lower ceiling room.

FILTER MEDIA..... The unit with standard filter media is designed to handle almost any type of dust problem. A number of special filter medias are available for the most unusual type of dust problems.

INCREASED STORAGE ..... A hopper style discharge bin is available for increased storage capacity.

ELECTRICAL CONTROLS ..... Magnetic controls are not furnished as standard equipment, but are available as an extra.

AUTOMATIC SHAKER ..... The electric shaker can be controlled with a timing device which is energized when the fan is stopped. The shaker operates automatically for a predetermined length of time, then shuts itself off.

ELECTRIC SHAKER ..... The manual lever on the bag shaking assembly can be replaced by an electric motor. This feature is furnished as standard equipment on models with hopper storage, but must be ordered as an extra on all basic models.

DIRTY FILTER INDICATOR ... A magnehelic gauge (an indicating gauge) can be installed on the unit to automatically indicate when filter media needs cleaning.

WEATHER HOOD ..... For outside installation a weather hood can be installed to protect the motor. This feature is furnished as standard equipment on models with hopper storage.

WHEN YOU SEE MURPHY-RODGERS, YOU'RE LOOKING AT THE FINEST DUST COLLECTING AND AIR POLLUTION CONTROL EQUIPMENT AVAILABLE . . . ANYWHERE!

ANOTHER FINE PRODUCT OF

MURPHY-RODGERS, INC.

DUST COLLECTORS & AIR POLLUTION CONTROL EQUIPMENT

2301 BELGRAVE AVE., HUNTINGTON PARK, CALIF. 90255
TELEPHONE (213) 587-4118
FAX # (213) 583-9540

DISTRIBUTED BY

ARRANGEMENTS 1 and 9 — SIZES 144-364

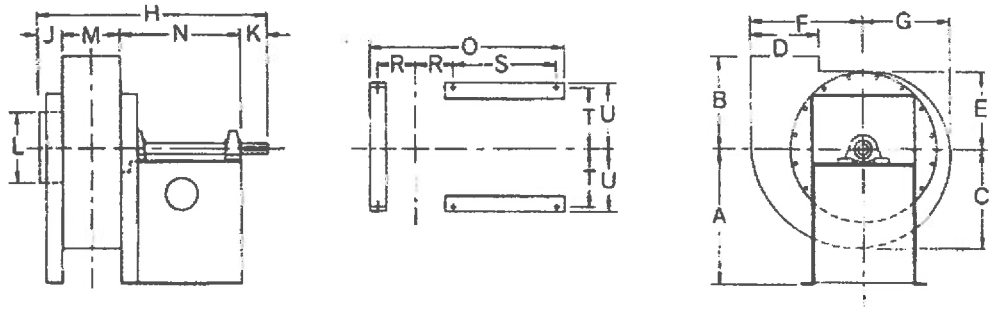

DIMENSIONS

L, M, and D are outside dimensions.

J is from housing side over inlet collar.

Tolerance: ±⅛"

Dimensions not to be used for construction unless certified.

Refer to page 5 for Arrangement 9 and 9F motor limits.

DIMENSIONS [Inches]

Size	Wheel dia.	A	B	C	D	E	F	G	H	J	K	L	M	N	O
144	14	15½	10½	11⅛	8¼	9⅜	12	10¼	24	1⅝	3½	9	7⅞	11	‡21
174	17	17½	12⅝	13⅜	10⅛	11⅛	14½	12¼	29⅛	1⅝	4	11	9½	14	‡25⅝
194	19⅛	21¼	14	16	10¼	11⅞	18	13⅞	34⅞	3⅛	4½	11	9¾	17½	29¼
224	22⅝	25½	16½	18⅞	13	14	21¼	16⅜	37⅜	3⅛	5	13	10¾	18½	31⅜
264	26⅛	28	18½	21¾	15	16⅛	24½	18⅞	43½	4⅛	5½	15	12¾	21½	37
294	29⅝	32½	21	24⅝	16⅞	18¼	27¾	21⅜	48⅛	4⅛	6	17	14	24	41⅛
334	33	32¾	23	27⅜	18¾	20⅜	30⅞	23⅞	51¾	4⅛	6½	19	15⅝	25½	44¼
364	36½	36¼	25½	30¼	20¾	22½	34⅛	26⅜	57½	5¼	7	21	17¼	28	49½

Size	R	S	T	U	a	b	c	d	Shaft dia. LS	Shaft dia. DH	Keyway LS	Keyway DH	Base holes
144	‡5⅛	8¾	8⅝	9½	10¾	16	11½	9¾	1 3/16	1 3/16	¼ x ⅛	¼ x ⅛	⅞
174	‡5⅞	11¾	9⅜	10¼	13⅛	19¼	13¾	11½	1 7/16	1 7/16	⅜ x 3/16	⅜ x 3/16	⅞
194	6	15¼	9⅜	10¼	15	22⅝	17	13	1 11/16	1 11/16	⅜ x 3/16	⅜ x 3/16	⅞
224	6½	16¼	10⅞	11¾	17⅝	26⅝	20	15¼	1 11/16	1 11/16	⅜ x 3/16	⅜ x 3/16	⅞
264	7⅞	18¼	12¼	13⅛	20¼	30⅝	23	17½	2 3/16	2 3/16	½ x ¼	½ x ¼	¼
294	8⅝	20¾	13⅝	14½	23	34⅜	26⅛	19⅞	2 3/16	2 3/16	½ x ¼	½ x ¼	¼
334	9½	22¼	15⅜	16⅝	25¾	38⅛	29¼	22⅜	2 3/16	2 3/16	½ x ¼	½ x ¼	¼
364	10⅞	23⅝	16½	17¾	28½	42⅛	32¼	24⅝	2 7/16	2 7/16	⅝ x 5/16	⅝ x 5/16	⅞

‡Inlet hanger omitted.

ARRANGEMENTS 1 and 9 — SIZES 404-574

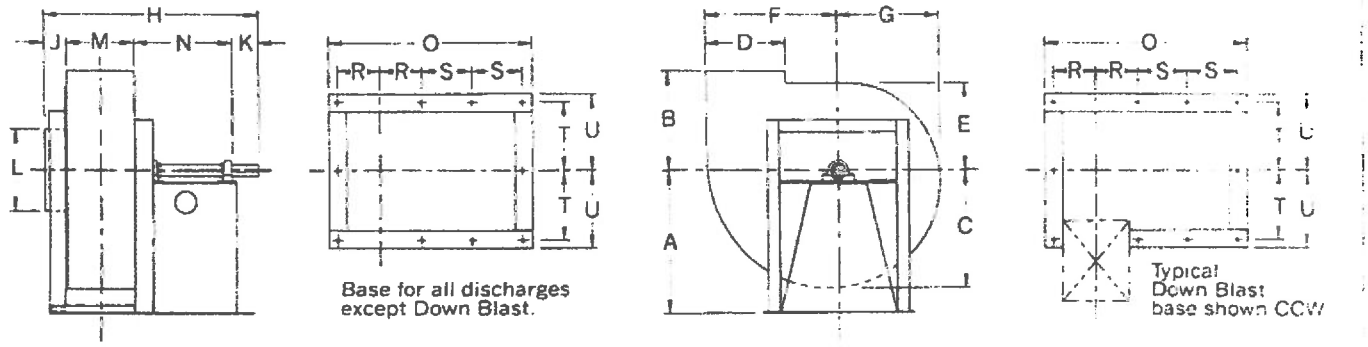

DIMENSIONS [Inches]

Size	Wheel dia.	A	B	C	D	E	F	G	H	J	K	L	M	N	O
404	40	40	28	33¼	22⅞	24¾	37⅜	29	59¾	5¼	7½	23	19	28	55¼
454	45⅛	45	31½	37½	25¾	27⅞	42¼	32⅝	64⅝	5¼	8	26	21⅜	30	59¾
504	50½	50½	34½	41⅞	28¾	31¼	47¼	36½	70⅞	6	8½	29	23⅞	32½	64⅝
574	57½	57½	39	47½	32⅝	35½	53⅝	41½	77⅜	7	9	33	27⅛	34¼	71¾

Size	R	S	T	U	a	b	c	d	Shaft dia. LS	Shaft dia. DH	Keyway LS	Keyway DH	Base holes
404	11⅝	14	18⅜	20⅝	31⅛	46¼	35⅜	27	2 7/16	2 7/16	⅝ x 5/16	⅝ x 5/16	⅞
454	12⅞	15	20¼	22½	35⅜	52¼	40	30⅝	2 11/16	2 11/16	⅝ x 5/16	⅝ x 5/16	[illegible]
504	14⅛	16¼	22¼	23¾	39⅜	57¾	44⅝	34⅛	2 15/16	2 15/16	¾ x ⅜	¾ x ⅜	1
574	16¼	17⅛	25	27⅜	44¾	65⅝	50¾	38¾	2 15/16	2 15/16	¾ x ⅜	¾ x ⅜	1

Choice of wheel designs

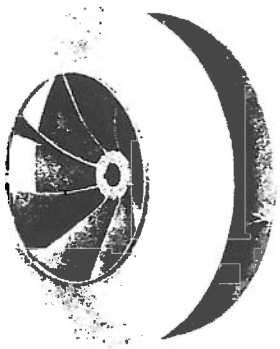

DH WHEEL

Available in Sizes 194 through 854.

Unique, high-efficiency [up to 74% ME] radial wheel utilizes curved blades and a tapered frontplate to minimize turbulence and control flow through the wheel. Can be used for airstreams with moderate dust loads that do not contain large particles or wet, sticky materials. Performance is stable from wide-open to completely closed-off.

LS WHEEL RIM WHEEL

LS wheel—Sizes 194 through 364.

RIM wheel—Sizes 404 through 854.

Flat radial-blade design ~~best for material-~~ conveying applications with airstreams containing coarse material or heavy dust and particulate matter. As with the DH wheel, the LS and RIM wheels provide stable airflow performance over the entire pressure range, from wide-open to completely closed-off.

BP/RD WHEELS

BP wheel—available in Sizes 144 through 854. Backplate wheel designed for material-handling applications involving paper or plastic scrap and trim, granular material, and low-density bulk materials. Support gussets used on Sizes 454 through 854. For static pressures to 30"WG.

RD wheel—available in Sizes 174 through 404. Rugged-duty version of BP wheel for high-density bulk material such as wood chips, corrugated paper trim, and metal scrap or trim. Constructed for static pressures to 20"WG.

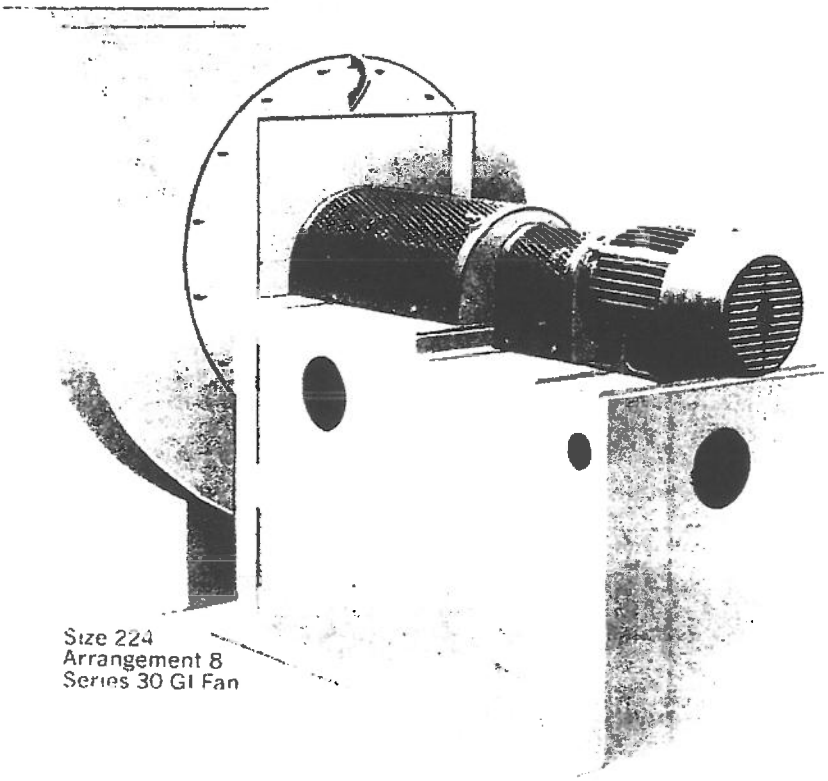

Size 224
Arrangement 8
Series 30 GI Fan

amca CERTIFIED RATINGS
AIR PERFORMANCE
AIR MOVEMENT AND CONTROL ASSOCIATION, INC.

WYNN ENVIRONMENTAL SALES CO
211 Camars Drive Warwick, PA 18974
(215) 442-9443 FAX (215) 442-9445

294 LS

Inlet diameter: 17" O.D.
Outlet area: 1.59 sq. ft. inside

Wheel diameter: 29⅝"
Wheel circumference: 7.76 ft.

CFM	OV	2"SP		4"SP		6"SP		8"SP		10"SP		12"SP		14"SP		16"SP		18"SP		20"SP		22"SP	
		RPM	BHP	RPM	BHP	RPM	BHP	RPM	BHP	RPM	BHP	RPM	BHP	RPM	BHP	RPM	BHP	RPM	BHP	RPM	BHP	RPM	BHP
1590	1000	642	0.94	898	1.99	1096	3.20	1263	4.53	1411	5.97	1546	7.54	1670	9.10	1785	11.0	1892	12.8	1995	14.7	2094	16.7
1908	1200	648	1.09	901	2.24	1098	3.53	1266	4.95	1414	6.49	1546	8.10	1669	9.84	1782	11.6	1891	13.5	1994	15.6	2089	17.6
2226	1400	656	1.25	906	2.51	1102	3.89	1269	5.41	1415	7.01	1548	8.72	1670	10.5	1783	12.4	1891	14.4	1991	16.4	2089	18.6
2544	1600	666	1.43	913	2.80	1107	4.29	1272	5.89	1418	7.59	1550	9.37	1671	11.2	1786	13.2	1891	15.2	1993	17.4	2088	19.6
2862	1800	679	1.62	920	3.11	1112	4.70	1275	6.40	1421	8.19	1553	10.1	1673	12.0	1787	14.1	1892	16.2	1993	18.4	2089	20.7
3180	2000	693	1.84	928	3.44	1119	5.15	1281	6.94	1426	8.85	1557	10.8	1677	12.9	1789	15.0	1896	17.2	1995	19.5	2092	21.9
3498	2200	708	2.07	938	3.79	1126	5.62	1287	7.52	1429	9.50	1560	11.6	1682	13.8	1792	15.9	1898	18.3	1999	20.6	2093	23.0
3816	2400	726	2.33	949	4.16	1134	6.10	1293	8.12	1435	10.2	1565	12.4	1686	14.7	1797	17.0	1901	19.3	2002	21.8	2096	24.3
4134	2600	745	2.62	963	4.57	1143	6.61	1301	8.74	1442	11.0	1570	13.2	1689	15.6	1799	18.0	1904	20.5	2007	23.1	2098	25.6
4770	3000	787	3.28	993	5.46	1165	7.72	1319	10.1	1457	12.5	1585	15.0	1703	17.6	1813	20.2	1914	22.8	2014	25.6	2106	28.4
5406	3400	832	4.07	1027	6.47	1193	8.98	1341	11.6	1476	14.2	1601	17.0	1716	19.7	1825	22.6	1926	25.4	2024	28.4	2117	31.4
6042	3800	881	5.01	1065	7.62	1224	10.3	1367	13.2	1500	16.1	1621	19.1	1733	22.0	1840	25.1	1941	28.2	2037	31.3	2130	34.6
6678	4200	931	6.12	1107	8.95	1260	11.9	1399	15.0	1525	18.1	1644	21.3	1753	24.5	1859	27.8	1957	31.1	2052	34.5	2142	37.6
7314	4600	985	7.41	1152	10.5	1298	13.6	1431	16.9	1553	20.2	1670	23.7	1778	27.2	1881	30.7	1977	34.2	2071	37.8	2158	41.4
7950	5000	1039	8.89	1199	12.2	1340	15.6	1467	19.0	1587	22.6	1699	26.3	1804	30.0	1904	33.7	1999	37.5	2089	41.2	2179	45.2
8586	5400	1095	10.6	1248	14.1	1382	17.7	1506	21.4	1622	25.2	1731	29.1	1832	32.9	1930	36.9	2024	41.0	2114	45.0		
9222	5800	1153	12.6	1299	16.3	1428	20.1	1548	24.0	1660	28.0	1765	32.1	1865	36.2	1960	40.4	2050	44.6	2139	49.0		

334 LS

Inlet diameter: 19" O.D.
Outlet area: 1.97 sq. ft. inside

Wheel diameter: 33"
Wheel circumference: 8.64 ft.

CFM	OV	2"SP		4"SP		6"SP		8"SP		10"SP		12"SP		14"SP		16"SP		18"SP		20"SP		22"SP	
		RPM	BHP	RPM	BHP	RPM	BHP	RPM	BHP	RPM	BHP	RPM	BHP	RPM	BHP	RPM	BHP	RPM	BHP	RPM	BHP	RPM	BHP
1970	1000	582	1.14	810	2.43	987	3.94	1137	5.63	1272	7.51	1392	9.50	1502	11.6	1608	13.9	1705	16.3	1796	18.8	1885	21.4
2364	1200	590	1.34	815	2.74	991	4.34	1141	6.13	1273	8.07	1392	10.1	1504	12.4	1606	14.7	1703	17.2	1794	19.7	1883	22.4
2758	1400	601	1.56	821	3.08	995	4.79	1143	6.65	1275	8.68	1394	10.8	1504	13.2	1607	15.6	1705	18.1	1794	20.8	1880	23.5
3152	1600	612	1.81	829	3.46	1001	5.28	1148	7.25	1278	9.36	1397	11.6	1506	14.0	1609	16.5	1705	19.1	1794	21.8	1887	24.7
3546	1800	626	2.09	839	3.89	1009	5.84	1153	7.89	1284	10.1	1401	12.5	1508	14.9	1610	17.5	1705	20.2	1797	23.0	1883	25.9
3940	2000	639	2.38	850	4.35	1018	6.42	1161	8.60	1290	10.9	1405	13.3	1514	15.9	1614	18.6	1709	21.4	1798	24.2	1884	27.2
4334	2200	655	2.70	861	4.84	1027	7.06	1170	9.38	1295	11.8	1413	14.4	1519	17.0	1619	19.8	1712	22.6	1802	25.6	1888	28.7
4728	2400	671	3.05	873	5.35	1037	7.72	1178	10.2	1303	12.7	1419	15.4	1525	18.2	1625	21.1	1719	24.0	1807	27.0	1891	30.2
5122	2600	688	3.43	887	5.91	1048	8.45	1188	11.1	1313	13.7	1425	16.5	1532	19.4	1629	22.3	1724	25.4	1810	28.5	1894	31.7
5910	3000	726	4.29	916	7.13	1074	10.0	1209	12.9	1332	15.9	1443	18.9	1548	22.0	1644	25.2	1736	28.5	1823	31.9	1907	35.3
6698	3400	768	5.34	948	8.49	1101	11.7	1234	15.0	1354	18.3	1464	21.6	1566	25.0	1663	28.5	1752	31.9	1838	35.5	1919	39.1
7486	3800	813	6.58	984	10.0	1131	13.6	1261	17.2	1378	20.8	1488	24.5	1588	28.2	1682	31.9	1771	35.7	1856	39.5	1935	43.4
8274	4200	862	8.07	1022	11.8	1163	15.7	1291	19.6	1405	23.6	1512	27.6	1610	31.5	1704	35.6	1792	39.7	1875	43.8	1955	48.0
9062	4600	913	9.83	1063	13.8	1199	18.0	1323	22.3	1435	26.6	1539	30.9	1636	35.3	1728	39.7	1815	44.0	1895	48.3	1976	52.9
9850	5000	965	11.9	1107	16.0	1236	20.5	1356	25.1	1466	29.9	1567	34.5	1662	39.1	1753	43.8	1838	48.5	1922	53.4	1999	58.1
10638	5400	1017	14.2	1152	18.6	1277	23.4	1391	28.3	1499	33.3	1599	38.4	1693	43.4	1782	48.5	1864	53.4	1944	58.4	2022	63.6
11426	5800	1073	16.9	1199	21.5	1320	26.5	1430	31.7	1534	37.1	1631	42.4	1723	47.8	1809	53.1	1893	58.6	1973	64.1		

364 LS

Inlet diameter: 21" O.D.
Outlet area: 2.41 sq. ft. inside

Wheel diameter: 36½"
Wheel circumference: 9.56 ft.

CFM	OV	2"SP		4"SP		6"SP		8"SP		10"SP		12"SP		14"SP		16"SP		18"SP		20"SP		22"SP	
		RPM	BHP	RPM	BHP	RPM	BHP	RPM	BHP	RPM	BHP	RPM	BHP	RPM	BHP	RPM	BHP	RPM	BHP	RPM	BHP	RPM	BHP
2410	1000	526	1.38	732	2.96	892	4.80	1028	6.86	1150	9.15	1258	11.6	1360	14.2	1453	17.0	1542	19.9	1624	22.9	1704	25.7
2892	1200	534	1.63	737	3.33	896	5.29	1031	7.47	1151	9.84	1258	12.4	1360	15.1	1452	17.9	1540	20.9	1622	24.1	1703	27.3
3374	1400	543	1.90	742	3.75	900	5.83	1033	8.11	1152	10.6	1260	13.2	1360	16.0	1453	19.0	1541	22.1	1622	25.3	1700	28.6
3856	1600	553	2.20	749	4.22	905	6.43	1038	8.84	1156	11.4	1263	14.2	1362	17.1	1454	20.2	1541	23.4	1622	26.6	1702	30.1
4338	1800	566	2.54	759	4.74	913	7.11	1043	9.62	1160	12.3	1266	15.2	1364	18.2	1455	21.3	1541	24.6	1625	28.1	1703	31.7
4820	2000	578	2.89	768	5.30	920	7.83	1049	10.5	1166	13.4	1270	16.3	1368	19.4	1459	22.7	1545	26.1	1625	29.6	1703	33.2
5302	2200	592	3.29	779	5.90	929	8.61	1058	11.4	1171	14.4	1277	17.5	1373	20.8	1464	24.1	1548	27.6	1629	31.2	1707	35.0
5784	2400	607	3.71	789	6.53	937	9.42	1065	12.4	1178	15.5	1283	18.8	1379	22.2	1469	25.7	1554	29.3	1633	33.0	1709	36.9
6266	2600	622	4.18	801	7.21	948	10.3	1074	13.5	1187	16.8	1289	20.1	1385	23.7	1473	27.3	1558	31.1	1636	34.8	1712	38.8
7230	3000	656	5.24	828	8.69	971	12.2	1093	15.8	1204	19.4	1305	23.1	1399	26.9	1487	30.8	1569	34.8	1648	38.9	1724	43.2
8194	3400	695	6.51	857	10.4	995	14.3	1116	18.3	1224	22.3	1323	26.3	1416	30.5	1503	34.8	1584	39.0	1662	43.4	1735	47.8
9158	3800	735	8.03	889	12.2	1023	16.6	1140	21.0	1246	25.4	1345	29.9	1436	34.4	1520	39.0	1601	43.6	1678	48.3	1750	53.0
10122	4200	779	9.85	924	14.4	1052	19.1	1167	24.0	1270	28.8	1367	33.7	1455	38.5	1540	43.5	1620	48.5	1695	53.5	1767	58.6
11086	4600	825	12.0	961	16.8	1084	21.9	1196	27.3	1297	32.5	1391	37.8	1479	43.1	1563	48.5	1641	53.8	1713	59.1	1787	64.7
12050	5000	872	14.5	1000	19.6	1118	25.1	1226	30.7	1326	36.5	1417	42.1	1503	47.8	1584	53.6	1662	59.3	1737	65.3	1807	71.2
13014	5400	919	17.3	1041	22.7	1155	28.6	1258	34.5	1355	40.7	1446	46.9	1530	53.0	1611	59.2	1685	65.3	1758	71.4	1828	77.7
13978	5800	970	20.6	1084	26.2	1193	32.4	1293	38.8	1387	45.3	1474	51.8	1559	58.4	1635	64.9	1711	71.6	1784	78.3		

Performance shown is for Series 20 GI Fans with outlet ducts and with inlet ducts. BHP shown does not include belt drive losses.

From: "Rick Wynn" <Sales@WynnEnv.com>
Subject: Re: Fwd: Murphy-Rodgers Unit
Date: Thu, May 24, 2012 8:04 am
To: "Sarah Stine" <slstine@torf.us>

Sarah,

For most woodworking applications you'll achieve 99.9% total removal efficiency, with over 99% fractional efficiency at 5 microns. This is assuming your bags are in good condition.

Rick
--
Rick Wynn
Wynn Environmental
211 Camars Drive
Warwick, PA 18974
Phone: (215)442-9443
Fax: -9445
Website: www.WynnEnv.com

Sarah Stine wrote:
> Hello Rick-
>
> Thank you for the equipment information. For the regulatory agency here,
> we need particle removal efficiency details, which I don't think is
> included with the materials sent. Do you have that?
>
> Thank you,
> Sarah
>
> Sarah Stine, P.E.
> slstine@torf.us
> 208.571.2393 FAX: 208.345.8285
>
> TORF Environmental Management
> www.torf.us
>
> On Wed, May 23, 2012 3:56 pm, Robert Colling wrote:
> Hi Sarah,
>
> See the attachments for the information on the carpenter shop bag
> house,supplied by the factory. Their phone number and e-mail follow their
> response. I have listed the equipment connected to the bag house below.
> Thanks Sarah, let me know if there is more I need to get you.
>
>
>
>
> ---------- Forwarded message ----------
> From: Rick Wynn <Sales@wynnenv.com>
> Date: Wed, May 23, 2012 at 12:17 PM
> Subject: Murphy-Rodgers Unit
> To: CollRobi@isu.edu
>
>
> Robin,
>
> As we discussed, the MRA-19-420H is essentially the MRA-17-420H. I don't
> know why the number changed...they both have (100) 68" bags. Perhaps
> there

> is some structural difference? Please see the attached brochure and motor
> data sheet.
>
> Regarding the fan, you can safely run somewhere around 5500-6000 cfm.
> Please note that you are running very close to a critical point on the
> fan
> curve, so be sure to install a damper somewhere in the system. You'll
> have
> to watch your motor amperage and cut the air flow back until the motor
> runs
> under nameplate. According to the fan curve, this fan could draw over 30
> HP if allowed to run wide-open. I'm actually surprised it doesn't have a
> 25 or 30 HP motor. Oh well.
>
> Incidentally, 5500 cfm falls right at 4000 ft/min in a 16" duct, so the
> numbers make sense. (Most wood shop systems are designed for 4000 ft/min
> pipe velocity.) Your main trunk should be 16" ID or less.
>
> When you are ready, we have the bags for this. You'll need (100) of our
> bag #MRS68 at $16.60 each. We usually have these in stock.
>
> Thanks in advance and please give me a call with any questions.
>
> Sincerely,
> Rick
>
> --
> --
> Rick Wynn
> Wynn Environmental
> 211 Camars Drive
> Warwick, PA 18974
> Phone: (215)442-9443
> Fax: -9445
> Website: www.WynnEnv.com
>
>
>
>
> --
> Robin Colling
>
> Environmental And Safety Manager
> Idaho State University
> Facilities Services
> 921 south 8th stop 8137
> Pocatello, Idaho, 83209-8137
>
> (208) 282-2209 (Facilities Main)
> (208) 282-2747 (office)
> (208) 221-0446 (cell)
>

THIS PAGE INTENTIONALLY LEFT BLANK FOR TWO-SIDED PRINTING

TORF
ENVIRONMENTAL
MANAGEMENT

Idaho State University
Facilities Services, Building No. 18
749 E. Humbolt
Pocatello, Idaho 83209-8137

AIR QUALITY PERMIT TO CONSTRUCT EXEMPTION
Emergency Generator No. 5
Equipment Order Date: 5/20/2007

Idaho State University (ISU) is documenting the installation of an emergency generator at its campus in Pocatello, Idaho. In accordance with IDAPA 58.01.01.222.01.d, the generator is exempt from the requirement to obtain a permit to construct.

From IDAPA 58.01.01:
222. CATEGORY II EXEMPTION
No permit to construction is required for the following sources.

01. Exempt Source. A source that satisfies the criteria set forth in Section 220 and that is specified below.

...

d. Stationary internal combustion engines used exclusively for emergency purposes which are operated less than five hundred (500) hours per year and are fueled by natural gas, propane gas, liquefied petroleum gas, distillate fuel oils, residual fuel oils, and diesel fuel; waste oil, gasoline, or refined gasoline shall not be used.

Emergency Generator No.5 is powered by a 600 brake horsepower (bhp) diesel engine. The unit is designed to provide emergency power to Rendezvous Building #38. Manufacturer's specifications are attached, including a *Statement of Exhaust Emissions*. Except in emergency situations, the unit will only be operated to perform maintenance and readiness checks. This operating time for maintenance and checks is less than 500 hours per year.

220. GENERAL EXEMPTION CRITERIA FOR PERMIT TO CONSTRUCT EXEMPTIONS

01. General exemption Criteria. Sections 220 through 223 may be used by owners or operator to exempt certain sources from the requirement to obtain a permit to construct. ..... No permit to construct is required for a source that satisfies all of the following criteria, in addition to the criteria set forth at Sections 221, 222, or 223:

a. The maximum capacity of a source to emit an air pollutant under its physical and operational design without consideration of limitations on emissions such as air pollution control equipment, restrictions on hours of operation and restriction on the type and amount of material combusted stored or processed would not:

i. Equal or exceed one hundred (100) tons per year of any regulated air pollutant.

ii. Cause an increase in the emissions of a major facility that equals or exceeds the significant emissions rates set out in the definition of significant at Section 006.

b. Combination. The source is not part of a proposed new major facility or part of a proposed major modification.

Estimated emissions from Emergency Generator No. 5 are provided in Table 1, attached. Estimated uncontrolled emissions at 8760 hours per year of operation and estimated maximum actual

emissions at 500 hours per year of operation are provided. Uncontrolled emissions of all regulated pollutants are less than 100 tons per year, as required by 58.01.01.220.01.a.i.

ISU is not a major facility, so the requirements of 220.a.ii do not apply. ISU is an existing minor facility and the installation of this generator is not part of a major modification, so the requirements of 220.b are satisfied.

Therefore, since Emergency Generator No. 5 is a specified source (IDAPA 58.01.01.222.01.d) and since uncontrolled emissions are less than 100 tons per year, the facility is not major, and the source is not part of a major modification, the criteria for exemption from the requirements to obtain a permit to construct are satisfied (IDAPA 58.01.01.220.01.a-b). In accordance with IDAPA 58.01.01.220.02, this exemption documentation will be maintained in ISU records for not less than five (5) years or for the life of the source, whichever is greater.

Enc.: Table 1, Statement of Exhaust Emissions, Equipment Specification Sheets (5)

Prepared by: TORF Environmental Management, 3459 E. Boulder Heights Dr., Boise, ID 83712 (S.Stine)

Table 1: Emergency Generator No. 5 Estimated Emissions

Emergency Generator	**No. 5**
Location	Rendezvous Building #38
Manufacturer	Generac
Model	SD400
Mfr. Production Date	3/24/2005
Order Date	5/30/2007
Startup Date	Oct-07
Rated Generator Power (kWe)	400
Rated Engine Power (bhp)	600
Fuel	Diesel
Fuel Rate at 100% (gph)	29.6
EPA Certification	None

Annual Emissions	$PM_{2.5}$	PM_{10}	SO_2	NO_x	CO	VOC	Lead	THAPs
Emission Factor Source	Mfr.	Mfr.	AP-42 3.4-1	Mfr.	Mfr.	Mfr. (THC)	NA	Mfr. (THC)
Emission Factor (lb/bhp-hr)	7.33E-04	7.33E-04	1.21E-05	1.52E-02	2.42E-03	3.08E-04	NA	3.08E-04
Uncontrolled Operations (hr/yr)	8760							
Uncontrolled Emissions (tons/yr)	1.93	1.93	0.03	39.9	6.36	0.81	NA	0.81
Maximum Actual Operations (hr/yr)	500							
Maximum Actual Emissions (tons/yr)	0.110	0.110	0.002	2.278	0.363	0.046	NA	0.046

Notes:

1. SO2 emissions based on the use of low sulfur diesel fuel with 15 ppm max sulfur.

GENERAC®
POWER SYSTEMS, INC.

STATEMENT OF EXHAUST EMISSIONS
DIESEL-FUELED GENERATOR

The measured emission values provided here are proprietary to Generac and its' authorized dealers. This information may only be disseminated upon request, to regulatory governmental bodies fo r emissions permitting purposes or to specifying organizations as submittal data when expressly required by project specifications, and shall remain confidential and not open to public viewing. This information is not intended for compilation or sales purposes and may not be used as such, nor may it be reproduced without the expressed written permission of Generac Power Systems, Inc. The data provided shall not be meant to include information made public by Generac.

Generator Type: **SD400** kW_e Rating: **400**

Engine Size: **16.0L** HP at rated kW_e: **600**

Aspiration: **Turbocharged and aftercooled**

Speed (RPM): **1800**

Additional Equipment Description or Comments:

Emissions Test Type: **5-mode**

Measured Emissions (grams / brake horsepower-hour):

NOx	THC	CO	PM	PM10
6.900	**0.140**	**1.100**	**0.350**	**0.333**

- The stated values are actual exhaust emission test measurements obtained from a unit representative of the generator type and engine described above.
- Values based on 5-mode testing are official data of record as submitted to regulatory agencies for certification purposes. Testing was conducted in accordance with prevailing EPA & CARB protocols, which are typically accepted by SCAQMD and other regional authorities.
- Values based on full load testing are provided when 3 or 5-mode test data is either unavailable, or not applicable. Data may be based on testing performed by either the engine supplier or Generac Power Systems.
- No emission values provided above are to be construed as guarantees of emission levels for any given Generac generator unit.
- Generac Power Systems reserves the right to revise this information without prior notice.
- Consult state and local regulatory agencies for specific permitting requirements.

0601040SSD 8/03

INDUSTRIAL SALES
P.O. BOX 8 ● WAUKESHA, WI 53187 ● 262/544-4811 ● FAX 262/544-4854

GENERAC® | INDUSTRIAL

SD400

Industrial Diesel Generator Set

EPA Certified Stationary Emergency

Standby Power Rating
500kVA 400kW 60Hz

Prime Power Rating*
450kVA 360KW 60Hz

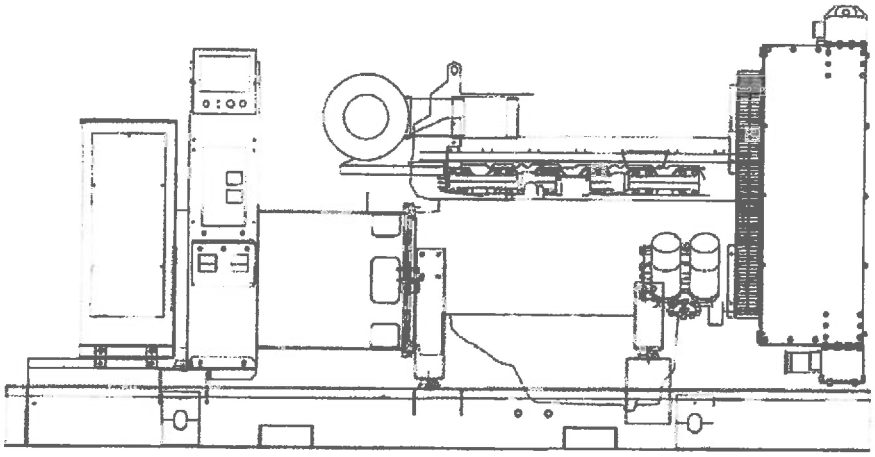

Generator Image used for illustration purposes only

*EPA Certified Prime ratings are not available in the U.S. or its Territories for engine model year 2011 and beyond

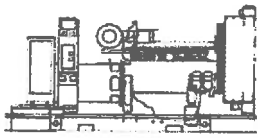

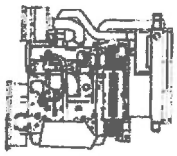

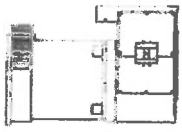

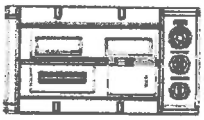

features	benefits
Generator Set	
• PROTOTYPE & TORSIONALLY TESTED	▸ PROVIDES A PROVEN UNIT
• UL2200 TESTED	▸ ENSURES A QUALITY PRODUCT
• RHINOCOAT PAINT SYSTEM	▸ IMPROVES RESISTANCE TO ELEMENTS
• WIDE RANGE OF ENCLOSURES AND TANKS	▸ PROVIDES A SINGLE SOURCE SOLUTION
Engine	
• EPA COMPLIANT	▸ ENVIRONMENTALLY FRIENDLY
• INDUSTRIAL TESTED, GENERAC APPROVED	▸ ENSURES INDUSTRIAL STANDARDS
• POWER-MATCHED OUTPUT	▸ ENGINEERED FOR PERFORMANCE
• INDUSTRIAL GRADE	▸ IMPROVES LONGEVITY AND RELIABILITY
Alternator	
• TWO-THIRDS PITCH	▸ ELIMINATES HARMFUL 3RD HARMONIC
• LAYER WOUND ROTOR & STATOR	▸ IMPROVES COOLING
• CLASS H MATERIALS	▸ HEAT TOLERANT DESIGN
• DIGITAL 3-PHASE VOLTAGE CONTROL	▸ FAST AND ACCURATE RESPONSE
Controls	
• ENCAPSULATED BOARD W/ SEALED HARNESS	▸ EASY, AFFORDABLE REPLACEMENT
• 4-20mA VOLTAGE-TO-CURRENT SENSORS	▸ NOISE RESISTANT 24/7 MONITORING
• SURFACE-MOUNT TECHNOLOGY	▸ PROVIDES VIBRATION RESISTANCE
• ADVANCED DIAGNOSTICS & COMMUNICATIONS	▸ HARDENED RELIABILITY

primary codes and standards

NEMA c UL us LISTED NFPA ISO

GENERAC | INDUSTRIAL POWER

SD400

application and engineering data

ENGINE SPECIFICATIONS

General

Make	Volvo
EPA Emissions Compliance	Stationary Emergency
EPA Emissions Reference	See Emissions Data Sheet
Cylinder #	6
Type	In-Line
Displacement - L	13
Bore - mm (in.)	131 (5.16)
Stroke - mm (in.)	158 (6.22)
Compression Ratio	18.8:1
Intake Air Method	Turbocharged/Aftercooled
Cylinder Head Type	4-Valve
Piston Type	Aluminum
Crankshaft Type	Dropped Forged Steel

Engine Governing

Governor	Electronic Isochronous
Frequency Regulation (Steady State)	± 0.25%

Lubrication System

Oil Pump Type	Gear
Oil Filter Type	Full-Flow
Crankcase Capacity - L (qts)	36 (38.02)

Cooling System

Cooling System Type	Closed Recovery
Water Pump Flow	Pre - Lubed, Self Sealing
Fan Type	Pusher
Fan Speed (rpm)	1780 rpm
Fan Diameter mm (in.)	889 (35)
Coolant Heater Standard Wattage	2000
Coolant Heater Standard Voltage	240VAC

Fuel System

Fuel Type	Ultra Low Sulfur Diesel Fuel
Fuel Specifications	ASTM
Fuel Filtering (microns)	5
Fuel Inject Pump	Electronic
Fuel Pump Type	Engine Driven Gear
Injector Type	Common Rail
Engine Type	Pre-Combustion
Fuel Supply Line - mm (in.)	12.7(½")
Fuel Return Line - mm (in.)	12.7(½")

Engine Electrical System

System Voltage	24VDC
Battery Charging Alternator	Std
Battery Size (at 0°C)	1155 CCA
Battery Group	8D
Battery Voltage	(2) - 12VDC
Ground Polarity	Negative

ALTERNATOR SPECIFICATIONS

Standard Model	520 mm Generac
Poles	4
Field Type	Revolving
Insulation Class - Rotor	H
Insulation Class - Stator	H
Total Harmonic Distortion	< 5%
Telephone Interference Factor (TIF)	< 50
Standard Excitation	Permanent Magnent
Bearings	Single Sealed Cartridge
Coupling	Direct, Flexible Disc
Load Capacity - Standby	100%
Prototype Short Circuit Test	Yes

Voltage Regulator Type	Digital
Number of Sensed Phases	All
Regulation Accuracy (Steady State)	± 0.25%

CODES AND STANDARDS COMPLIANCE (WHERE APPLICABLE)

NFPA 99	BS5514
NFPA 110	SAE J1349
ISO 8528-5	DIN6271
ISO 1708A.5	IEEE C62.41 TESTING
ISO 3046	NEMA ICS 1

Rating Definitions:
Standby – Applicable for a varying emergency load for the duration of a utility power outage with no overload capability. (Max. load factor = 70%)
Prime – Applicable for supplying power to a varying load in lieu of utility for an unlimited amount of running time. (Max. load factor = 80%) A 10% overload capacity is available for 1 out of every 12 hours.

GENERAC | INDUSTRIAL

SD400 operating data (60Hz)

POWER RATINGS (kW)

	STANDBY		PRIME	
Three-Phase 120/208VAC @0.8pf	400 kW	Amps: 1389	315 kW	Amps: 1251
Three-Phase 120/240VAC @0.8pf	400 kW	Amps: 1204	315 kW	Amps 1084
Three-Phase 277/480VAC @0.8pf	400 kW	Amps: 602	315 kW	Amps: 542
Three-Phase 347/600VAC @0.8pf	400 kW	Amps. 481	315 kW	Amps: 434

STARTING CAPABILITIES (sKVA)

sKVA vs. Voltage Dip

		480VAC						208/240VAC					
Alternator	kW	10%	15%	20%	25%	30%	35%	10%	15%	20%	25%	30%	35%
Standard	400	387	581	775	968	1162	1356	210	350	500	680	875	1100
Upsize 1	442	475	720	915	1145	1030	1290	-	-	-	-	-	-
Upsize 2	555	457	686	914	1143	1371	1600	-	-	-	-	-	-

FUEL

Fuel Pump Lift - in (mm)
36 (900)

Total Fuel Pump Flow (Combustion + Return)
33.3 gph

Fuel Consumption Rates*

STANDBY			PRIME		
Percent Load	gph	lph	Percent Load	gph	lph
25%	8.8	33.3	25%	8	30.3
50%	16.6	62.8	50%	15.1	57.2
75%	23.7	89.7	75%	21.6	81.8
100%	29.6	112.0	100%	26.9	101.8

* Refer to "Emissions Data Sheet" for maximum fuel flow for EPA and SCAQMD permitting purposes.

COOLING

		STANDBY	PRIME
Coolant Flow per Minute	gpm (lpm)	87.1 (330)	87.1 (330)
Heat Rejection to Coolant	BTU/hr	1,091,293	991,749
Inlet Air	cfm (m3/min)	19,070 (539.7)	19,070 (539.7)
Max. Operating Radiator Air Temp	F° (C°)	122 (50)	122 (50)
Max. Operating Ambient Temperature	F° (C°)	104 (40)	104 (40)
Coolant System Capacity	gal (L)	11.6 (44)	11.6 (44)
Maximum Radiator Backpressure	in H_2O	1.5	1.5

COMBUSTION AIR REQUIREMENTS

		STANDBY	PRIME
Flow at Rated Power	cfm (m3/min)	1100 (31.15)	990 (28.04)

ENGINE

		STANDBY	PRIME
Rated Engine Speed	rpm	1800	1800
Horsepower at Rated kW**	hp	601	541
Piston Speed	ft/min	1866	1866
BMEP	psi	355	320

** Refer to "Emissions Data Sheet" for maximum cHP for EPA and SCAQMD permitting purposes.

EXHAUST

		STANDBY	PRIME
Exhaust Flow (Rated Output)	cfm (m³/min)	2790 (79.0)	2511 (71.1)
Max. Backpressure (Post Silencer)	inHg (Kpa)	1.5 (5.1)	1.5 (5.1)
Exhaust Temp (Rated Output)	°F (°C)	975 (524)	878 (470)
Exhaust Outlet Size (Open Set)	NPT (male)	127 (5.0)	127 (5.0)

Deration – Operational characteristics consider maximum ambient conditions. Derate factors may apply under atypical site conditions. Please consult a Generac Power Systems Industrial Dealer for additional details. All performance ratings in accordance with ISO3046, BS5514, ISO8528 and DIN6271 standards.

GENERAC | INDUSTRIAL

SD400

standard features and options

GENERATOR SET

● Genset Vibration Isolation	Std
○ IBC Seismic Certified/Seismic Rated Vibration Isolators	Opt
○ Extended warranty	Opt
○ Gen-Link Communications Software	Opt
○ Steel Enclosure	Opt
○ Aluminum Enclosure	Opt

ENGINE SYSTEM

General

● Oil Drain Extension	Std
○ Oil Make-Up System	Opt
○ Oil Heater	Opt
● Air cleaner	Std
● Fan guard	Std
● Radiator duct adapter	Std

Fuel System

● Fuel lockoff solenoid	Std
● Secondary fuel filter	Std
● Stainless steel flexible exhaust connection	Std
● Industrial Exhaust Silencer	Std
○ Critical Exhaust Silencer	Opt
○ Flexible fuel lines	Opt
○ Primary fuel filter	Opt
○ Single Wall Tank (Export Only)	-
○ UL 142 Fuel Tank	Opt

Cooling System

○ 120VAC Coolant Heater	Opt
○ 208VAC Coolant Heater	Opt
● 240VAC Coolant Heater	Std
○ Other Coolant Heater_____	-
● Closed Coolant Recovery System	Std
● UV/Ozone resistant hoses	Std
● Factory-Installed Radiator	Std
● Radiator Drain Extension	Std

Engine Electrical System

● Battery charging alternator	Std
● Battery cables	Std
● Battery tray	Std
○ Battery box	Opt
○ Battery heater	Opt
● Solenoid activated starter motor	Std
○ 10A UL float/equalize battery charger	Opt
● Rubber-booted engine electrical connections	Std

ALTERNATOR SYSTEM

● UL2200 GENprotect™	Std
○ Main Line Circuit Breaker	Opt
○ 2nd Circuit Breaker	Opt
○ 3rd Circuit Breaker	-
○ Alternator Upsizing	Opt
○ Anti-Condensation Heater	Opt
○ Tropical coating	Opt
● Permanent Magnet Generator	Std

CONTROL SYSTEM

Control Panel

● Digital H Control Panel - Dual 4x20 Display	Std
○ Digital G-100 Control Panel - Touchscreen	na
○ Digital G-200 Paralleling Control Panel - Touchscreen	na
● Programmable Crank Limiter	Std
○ 21-Light Remote Annunciator	Opt
○ Remote Relay Panel (8 or 16)	Opt
● 7-Day Programmable Exerciser	Std
● Special Applications Programmable PLC	Std
● RS-232	Std
● RS-485	Std
● All-Phase Sensing DVR	Std
● Full System Status	Std
● Utility Monitoring (Req. H-Transfer Switch)	Std
● 2-Wire Start Compatible	Std
● Power Output (kW)	Std
● Power Factor	Std
● Reactive Power	Std
● All phase AC Voltage	Std
● All phase Currents	Std
● Oil Pressure	Std
● Coolant Temperature	Std
● Coolant Level	Std
○ Oil Temperature	Opt
● Fuel Pressure	Std
● Engine Speed	Std
● Battery Voltage	Std
● Frequency	Std
● Date/Time Fault History (Event Log)	Std
○ Low-Speed Exercise	-
● Isochronous Governor Control	Std
● -40deg C - 70deg C Operation	Std
● Waterproof Plug-In Connectors	Std
● Audible Alarms and Shutdowns	Std
● Not in Auto (Flashing Light)	Std
● Auto/Off/Manual Switch	Std
● E-Stop (Red Mushroom-Type)	Std
○ Remote E-Stop (Break Glass-Type, Surface Mount)	Opt
○ Remote E-Stop (Red Mushroom-Type, Surface Mount)	Opt
○ Remote E-Stop (Red Mushroom-Type, Flush Mount)	Opt
● NFPA 110 Level I and II (Programmable)	Std
● Remote Communication - RS232	Std
○ Remote Communication - Modem	Opt
○ Remote Communication - Ethernet	Opt
○ 10A Run Relay	Opt

Alarms (Programmable Tolerances, Pre-Alarms and Shutdowns)

○ Low Fuel	Opt
● Oil Pressure (Pre-programmed Low Pressure Shutdown)	Std
● Coolant Temperature (Pre-programmed High Temp Shutdown)	Std
● Coolant Level (Pre-programmed Low Level Shutdown)	Std
● Oil Temperature	Std
● Engine Speed (Pre-programmed Overspeed Shutdown)	Std
● Voltage (Pre-programmed Overvoltage Shutdown)	Std
● Battery Voltage	Std

Other Options

○ _____

○ _____

○ _____

GENERAC | INDUSTRIAL

SD400

dimensions, weights and sound levels

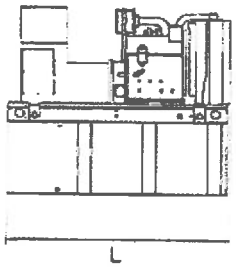

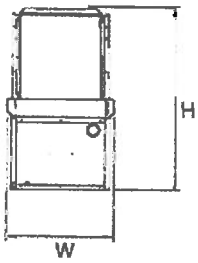

OPEN SET

RUN TIME HOURS	USABLE CAPACITY (GAL)	L	W	H	WT	dBA*
NO TANK	-	136	58	65	6155	90
6	183	136	58	78	7103	
15	438	136	58	90	7415	
23	693	136	58	102	7718	
32	946	208	58	105	9362	
45	1325	278	58	105	10195	

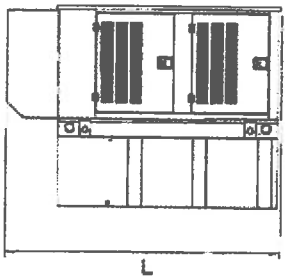

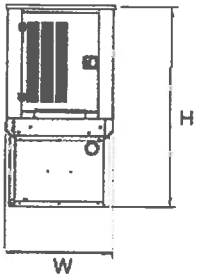

WEATHERPROOF ENCLOSURE

RUN TIME HOURS	USABLE CAPACITY (GAL)	L	W	H	WT	dBA*
NO TANK	-	175	58	78	8173	85
6	183	175	58	91	9121	
15	438	175	58	103	9433	
23	693	175	58	115	9736	
32	946	208	58	118	11380	
45	1325	278	58	118	12213	

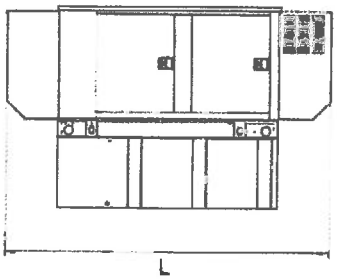

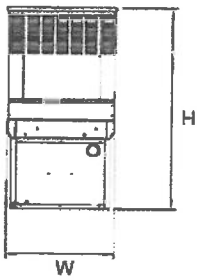

LEVEL 1 SOUND ENCLOSURE

RUN TIME HOURS	USABLE CAPACITY (GAL)	L	W	H	WT	dBA*
NO TANK	-	200	58	78	8546	79
6	183	200	58	91	9494	
15	438	200	58	103	9506	
23	693	200	58	115	10109	
32	946	234	58	118	11753	
45	1325	304	58	118	12586	

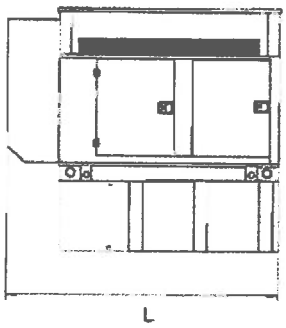

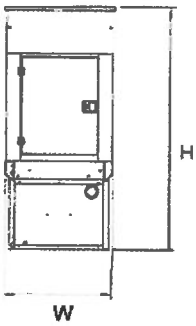

LEVEL 2 SOUND ENCLOSURE

RUN TIME HOURS	USABLE CAPACITY (GAL)	L	W	H	WT	dBA*
NO TANK	-	181	58	107	8055	77
6	183	181	58	120	9003	
15	438	181	58	132	9315	
23	693	181	58	144	9618	
32	946	208	58	147	11262	
45	1325	278	58	147	12095	

*All measurements are approximate and for estimation purposes only. Weights are without fuel in tank. Sound levels measured at 23ft (7m) and does not account for ambient site conditions.

Tank Options

○	MDEQ	OPT
○	Florida DERM/DEP	OPT
○	Chicago Fire Code	OPT
○	IFC Certification	CALL
○	ULC	CALL

Other Custom Options Available from your Generac Industrial Power Dealer

YOUR FACTORY RECOGNIZED GENERAC INDUSTRIAL DEALER

Specification characteristics may change without notice. Dimensions and weights are for preliminary purposes only. Please consult a Generac Power Systems Industrial Dealer for detailed installation drawings.

©2011 Generac Power Systems, Inc. All rights reserved. All specifications are subject to change without notice. Bulletin 0185840SBY-D / Printed in U.S.A. 09/16/11

THIS PAGE INTENTIONALLY LEFT BLANK FOR TWO-SIDED PRINTING

Idaho State University
Facilities Services, Building No. 18
749 E. Humbolt
Pocatello, Idaho 83209-8137

AIR QUALITY PERMIT TO CONSTRUCT EXEMPTION
Emergency Generator No. 6
Equipment Order Date: 7/14/2008

Idaho State University (ISU) is documenting the installation of an emergency generator at its campus in Pocatello, Idaho. In accordance with IDAPA 58.01.01.222.01.d, the generator is exempt from the requirement to obtain a permit to construct.

From IDAPA 58.01.01:
222. CATEGORY II EXEMPTION
No permit to construction is required for the following sources.

01. Exempt Source. A source that satisfies the criteria set forth in Section 220 and that is specified below.

...

d. Stationary internal combustion engines used exclusively for emergency purposes which are operated less than five hundred (500) hours per year and are fueled by natural gas, propane gas, liquefied petroleum gas, distillate fuel oils, residual fuel oils, and diesel fuel; waste oil, gasoline, or refined gasoline shall not be used.

Emergency Generator No.6 is powered by a 197 brake horsepower (bhp) diesel engine. The unit is designed to provide emergency power to Library Building #50. Manufacturer's specifications are attached, including a *Statement of Exhaust Emissions*. Except in emergency situations, the unit will only be operated to perform maintenance and readiness checks. Emergency Generator No. 6 is subject to 40 CFR Part 60, Subpart IIII NESHAP for Stationary Compression Ignition Internal Combustion Engines. In accordance with § 60.4211(f), maintenance and readiness testing of subject emergency engines is limited to 100 hours per year.

220. GENERAL EXEMPTION CRITERIA FOR PERMIT TO CONSTRUCT EXEMPTIONS

01. General exemption Criteria. Sections 220 through 223 may be used by owners or operator to exempt certain sources from the requirement to obtain a permit to construct. ..... No permit to construct is required for a source that satisfies all of the following criteria, in addition to the criteria set forth at Sections 221, 222, or 223:

a. The maximum capacity of a source to emit an air pollutant under its physical and operational design without consideration of limitations on emissions such as air pollution control equipment, restrictions on hours of operation and restriction on the type and amount of material combusted stored or processed would not:

i. Equal or exceed one hundred (100) tons per year of any regulated air pollutant.

ii. Cause an increase in the emissions of a major facility that equals or exceeds the significant emissions rates set out in the definition of significant at Section 006.

b. Combination. The source is not part of a proposed new major facility or part of a proposed major modification.

Estimated emissions from Emergency Generator No. 6 are provided in Table 1, attached. Estimated uncontrolled emissions at 8760 hours per year of operation and estimated maximum actual emissions at 100 hours per year of operation are provided. Uncontrolled emissions of all regulated pollutants are less than 100 tons per year, as required by 58.01.01.220.01.a.i.

ISU is not a major facility, so the requirements of 220.a.ii do not apply. ISU is an existing minor facility and the installation of this generator is not part of a major modification, so the requirements of 220.b are satisfied.

Therefore, since Emergency Generator No. 6 is a specified source (IDAPA 58.01.01.222.01.d) and since uncontrolled emissions are less than 100 tons per year, the facility is not major, and the source is not part of a major modification, the criteria for exemption from the requirements to obtain a permit to construct are satisfied (IDAPA 58.01.01.220.01.a-b). In accordance with IDAPA 58.01.01.220.02, this exemption documentation will be maintained in ISU records for not less than five (5) years or for the life of the source, whichever is greater.

Enc.: Table 1, Statement of Exhaust Emissions, Equipment Specification Sheets (4)

Prepared by: TORF Environmental Management, 3459 E Boulder Heights Dr, Boise, ID 83712 (S. Stine)

Table 1: Emergency Generator No. 6 Estimated Emissions

Emergency Generator	**No. 6**
Location	Library Building #50
Manufacturer	Generac
Model	SD135
Mfr. Production Date	6/3/2008
Order Date	7/14/2008
Startup Date	Jul-09
Rated Generator Power (kWe)	135
Rated Engine Power (bhp)	197
Fuel	Diesel
Fuel Rate at 100% (gph)	9.89
EPA Certification	Tier III

Annual Emissions	$PM_{2.5}$	PM_{10}	SO_2	NO_x	CO	VOC	Lead	THAPs
Emission Factor Source	Mfr.	Mfr.	AP-42 3.4-1	Mfr.	Mfr.	Mfr. (THC)	NA	Mfr. (THC)
Emission Factor (lb/bhp-hr)	2.40E-04	2.40E-04	1.21E-05	6.08E-03	2.16E-03	2.47E-04	NA	2.47E-04
Uncontrolled Operations (hr/yr)	8760							
Uncontrolled Emissions (tons/yr)	0.21	0.21	0.01	5.2	1.86	0.21	NA	0.21
Maximum Actual Operations (hr/yr)	100							
Maximum Actual Emissions (tons/yr)	0.002	0.002	0.000	0.060	0.021	0.002	NA	0.002

Notes:

1. SO2 emissions based on the use of low sulfur diesel fuel with 15 ppm max sulfur.

GENERAC®
POWER SYSTEMS, INC.
STATEMENT OF EXHAUST EMISSIONS
JOHN DEERE DIESEL FUELED GENERATOR

The measured emission values provided here are proprietary to Generac and its' authorized dealers. This information may only be disseminated upon request, to regulatory governmental bodies for emissions permitting purposes or to specifying organizations as submittal data when expressly required by project specifications, and shall remain confidential and not open to public viewing. This information is not intended for compilation or sales purposes and may not be used as such, nor may it be reproduced without the expressed written permission of Generac Power Systems, Inc. The data provided shall not be meant to include information made public by Generac.

Generator Model	**SD135**	Aspiration	**Turbocharged**
kW_E Rating	**135**	Engine Speed	**1800 RPM**
Engine Family	**8JDXL06.8104**	EPA Certificate #	**JDX-NRCI-08-03**
Engine Model	**6068HF285 K,L**	CARB Certificate #	**U-R-004-0312**
Rated Power kWm	**147**	Tier	**Tier III**

Certificates are available on the John Deere Website. *www.deere.com/en_US/rg/servicesupport/emissions_certificates/certified/2008.html*

John Deere Emissions based on Rated kW_E of specific Models.
(These values are Actual Exhaust Emissions during a 5 Mode Test at Rated kW_E)

CO	HC	NOx	PM	
1.313	**0.150**	**3.698**	**0.146**	Grams/kW-hr
0.98	**0.112**	**2.76**	**0.109**	Grams bhp-hr

- The stated values are actual exhaust emission test measurements obtained from a unit representative of the generator type and engine described above.
- Values based on 5-mode testing are official data of record as submitted to regulatory agencies for certification purposes. Testing was conducted in accordance with prevailing EPA & CARB protocols, which are typically accepted by SCAQMD and other regional authorities.
- Values based on full load testing are provided for reference only due to 5-mode test data being unavailable. Data may be based on testing performed by either the engine supplier or Generac Power Systems.
- No emission values provided above are to be construed as guarantees of emission levels for any given Generac generator unit.
- Generac Power Systems reserves the right to revise this information without prior notice.
- Consult state and local regulatory agencies for specific permitting requirements.
- The emission performance data supplied by the equipment manufacturer is only one element required toward completion of the permitting and installation process. State and local regulations may vary on a case-by-case basis and must be consulted by the permit applicant/equipment owner prior to equipment purchase or installation. The data supplied herein by Generac Power Systems cannot be construed as a guarantee of installability of the generating set.

INDUSTRIAL SALES
P.O. BOX 8 WAUKESHA, WI 53187 262-544-4800 FAX 262-544-4854

SD135
SD150

Liquid Cooled Diesel Engine Generator Sets

Standby Power Rating
135KW 60Hz
150KW 60 Hz

Prime Power Rating
120KW 60 Hz
135KW 60 Hz

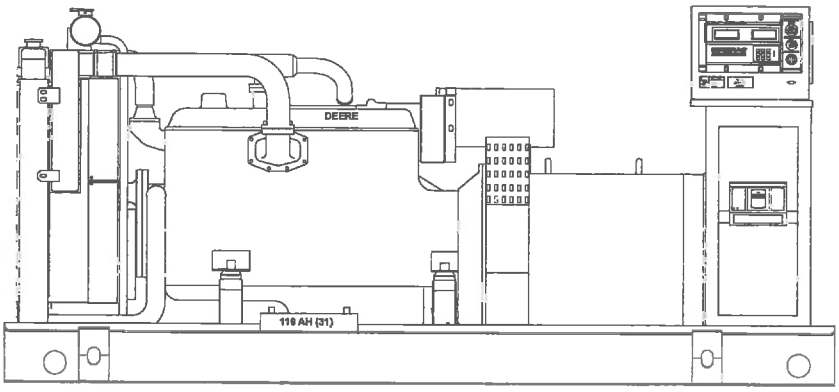

Power Matched
GENERAC 6.8 DTA ENGINE
Turbo-Charged, Aftercooled
EPA Tier III Compliant

FEATURES

- **INNOVATIVE DESIGN & PROTOTYPE TESTING** are key components of GENERAC'S success in "IMPROVING POWER BY DESIGN." But it doesn't stop there. Total commitment to component testing, reliability testing, environmental testing, destruction and life testing, plus testing to applicable CSA, NEMA, EGSA, and other standards, allows you to choose GENERAC POWER SYSTEMS with the confidence that these systems will provide superior performance.

- **TEST CRITERIA:**
  - ✓ PROTOTYPE TESTED
  - ✓ SYSTEM TORSIONAL TESTED
  - ✓ ELECTRO-MAGNETIC INTERFERENCE
  - ✓ NEMA MG1 EVALUATION
  - ✓ MOTOR STARTING ABILITY
  - ✓ SHORT CIRCUIT TESTING
  - ✓ UL 2200 COMPLIANCE AVAILABLE

- **MICROPROCESSOR CONTROLLED VOLTAGE AND FREQUENCY REGULATION.** Digital microprocessor control of engine and generator functions and protective systems integrated into a single controller for unparalleled performance and reliability. LCD display of all engine and generator functions and remote monitoring via GenLink® software.

- **SINGLE SOURCE SERVICE RESPONSE** from Generac's dealer network provides parts and service know-how for the entire unit, from the engine to the smallest electronic component. You are never on your own when you own a GENERAC POWER SYSTEM.

- **ECONOMICAL DIESEL POWER.** Low cost operation due to modern diesel engine technology. Better fuel utilization plus lower cost per gallon provide real savings.

- **LONGER ENGINE LIFE.** Generac heavy-duty diesels provide long and reliable operating life.

- **GENERAC TRANSFER SWITCHES AND ACCESSORIES.** Long life and reliability is synonymous with GENERAC POWER SYSTEMS. One reason for this confidence is that the GENERAC product line includes its own transfer systems, accessories, and controls for total system compatibility.

GENERAC®

APPLICATION & ENGINEERING DATA

SD135/SD150

GENERATOR SPECIFICATIONS

TYPE ..... Four-pole, revolving field
ROTOR INSULATION ..... Class H
STATOR INSULATION ..... Class H
TOTAL HARMONIC DISTORTION ..... <3.0%
TELEPHONE INFLUENCE FACTOR (TIF) ..... <50
ALTERNATOR ..... Self-ventilated and drip-proof
BEARINGS (PRE-LUBED & SEALED) 2
COUPLING ..... Flexible Disc
LOAD CAPACITY (STANDBY) 100%

NOTE: Emergency loading in compliance with NFPA 99, NFPA 110. Generator rating and performance in accordance with ISO8528-5, BS5514, SAE J1349, ISO3046 and DIN6271 standards.

EXCITATION SYSTEM

PERMANENT MAGNET PILOT EXCITER ..... Eighteen-pole exciter ✓
Magnetically coupled DC current ✓
Mounted outboard of main bearing ✓
REGULATION ..... H100 Controller Digital ✓
3 Phase Sensing, ± 1% regulation ✓

GENERATOR FEATURES

- ❒ Revolving field heavy duty generator
- ❒ Directly connected to the engine
- ❒ Operating temperature rise 120 °C above a 40 °C ambient
- ❒ Insulation is Class H rated at 150 °C rise
- ❒ All prototype models have passed three phase short circuit testing

CONTROL PANEL FEATURES

❒ TWO FOUR LINE LCD DISPLAYS READ:

- Voltage (all phases)
- Power factor
- kVAR
- Engine speed
- Run hours
- Fault history
- Coolant temperature
- Low oil pressure shutdown
- Overvoltage
- Low coolant level
- Not in auto position (flashing light)
- ATS selection
- Current (all phases)
- kW
- Transfer switch status
- Low fuel pressure
- Service reminders
- Oil pressure
- Time and date
- High coolant temperature shutdown
- Overspeed
- Low coolant level
- Exercise speed

❒ INTERNAL FUNCTIONS:

- I^2T function for alternator protection from line to neutral and line to line short circuits
- Emergency stop
- Programmable auto crank function
- 2 wire start for any transfer switch
- Communicates with the Generac HTS transfer switch
- Built-in 7 day exerciser
- Adjustable engine speed at exerciser
- RS232 port for GenLink® control
- RS485 port remote communication
- Canbus addressable
- Governor controller and voltage regulator are built into the master control board
- Temperature range -40 °C to 70 °C

ENGINE SPECIFICATIONS

MAKE ..... DEERE
MODEL ..... See Exhaust Emission Sheet
CYLINDERS ..... 6 in-line
DISPLACEMENT ..... 6.8 Liters (415 cu. in.)
BORE ..... 106 mm (4.19 in.)
STROKE ..... 127 mm (5.0 in.)
COMPRESSION RATIO 17.0:1
INTAKE AIR ..... Turbocharged, Aftercooled
NUMBER OF MAIN BEARINGS 7
CONNECTING RODS ..... 6-Carbon Steel
CYLINDER HEAD ..... Cast Iron with Overhead Valve
PISTONS ..... 6-Heat Resistant Aluminum Alloy
CRANKSHAFT ..... Case Hardened, Die Forged, Carbon Steel

VALVE TRAIN

LIFTER TYPE ..... Solid
INTAKE VALVE MATERIAL ..... Special Heat Resistant Steel
EXHAUST VALVE MATERIAL ..... Special Heat Resistant Steel
HARDENED VALVE SEATS ..... Replaceable
VALVES PER CYLINDER 2

ENGINE GOVERNOR

❒ ELECTRONIC ..... Standard
FREQUENCY REGULATION, NO-LOAD TO FULL LOAD ... Isochronous
STEADY STATE REGULATION ..... ±0.25%

LUBRICATION SYSTEM

TYPE OF OIL PUMP ..... Forced Feed Lubrication w/ Oil Pump
OIL FILTER ..... Full Flow, Cartridge
CRANKCASE CAPACITY ..... 22.7 Liters (6.0 U.S. gallons)

COOLING SYSTEM

TYPE OF SYSTEM ..... Pressurized, closed recovery
WATER PUMP ..... Pre-lubed, Self-Sealing
TYPE OF FAN ..... Pusher
NUMBER OF FAN BLADES 7
DIAMETER OF FAN ..... 650 mm (26.0 in.)
COOLANT HEATER ..... 120V, 1800 W

FUEL SYSTEM

FUEL ..... #2D Fuel (Min Cetane #40)
(Fuel should conform to ASTM Spec.)
FUEL FILTER ..... 10 Micron
FUEL INJECTION PUMP ..... ZEXEL
FUEL PUMP ..... Mechanical
INJECTORS ..... Multi-hole, nozzle type
ENGINE TYPE ..... Direct injection
FUEL LINE (Supply) ..... 9.53 mm (0.375 in.)
FUEL RETURN LINE ..... 9.53 mm (0.375 in.)

ELECTRICAL SYSTEM

BATTERY CHARGE ALTERNATOR ..... 45 Amps at 24 V
STARTER MOTOR ..... 24 V
RECOMMENDED BATTERY 2-12V, 31
GROUND POLARITY ..... Negative

Rating definitions - Standby: Applicable for supplying emergency power for the duration of the utility power outage. No overload capability is available for this rating. (All ratings in accordance with BS5514, ISO3046 and DIN6271). Prime (Unlimited Running Time): Applicable for supplying electric power in lieu of commercially purchased power. Prime power is the maximum power available at variable load. A 10% overload capacity is available for 1 hour in 12 hours. (All ratings in accordance with BS5514, ISO3046, ISO8528 and DIN6271).

GENERAC®

SD135/SD150

OPERATING DATA

	STANDBY				PRIME			
	SD135		SD150		SD135		SD150	
GENERATOR OUTPUT VOLTAGE/KW-60Hz	kW	Rated AMP	kW	Rated AMP	kW	Rated AMP	kW	Rated AMP
120/240V, 1-phase, 1.0 pf (NOTE: Consult your Generac dealer for additional voltages.)	135	563	150	625	120	500	135	563
120/208V, 3-phase, 0.8 pf	135	468	150	520	120	416	135	468
120/240V, 3-phase, 0.8 pf	135	406	150	451	120	361	135	406
277/480V, 3-phase, 0.8 pf	135	203	150	226	120	180	135	203
600V, 3-phase, 0.8 pf	135	162	150	180	120	144	135	162
MOTOR STARTING								
Maximum KVA with 35% instantaneous voltage dip	208/240V	400/480V	208/240V	400/480V	208/240V	400/480V	208/240V	400/480V
with standard alternator; 60 Hz	348	464	348	464	348	464	348	464
with optional alternator; 60 Hz	490	653	490	653	490	653	490	653
FUEL								
Fuel consumption—60 Hz — Load	25%	50%	75%	100%	25%	50%	75%	100%
kW @ %	33.75	67.5	101.25	135	37.5	75	112.5	150
gal./hr.	2.87	5.45	7.95	9.89	3.11	5.89	8.60	10.83
Liters/Hr.	10.85	20.61	30.11	37.43	11.75	22.30	32.55	40.99
COOLING								
Coolant capacity — System - lit. (US gal.)	42.4 (11.2)		42.4 (11.2)		42.4 (11.2)		42.4 (11.2)	
Engine - lit. (US gal.)	13.0 (3.4)		13.0 (3.4)		13.0 (3.4)		13.0 (3.4)	
Radiator - lit. (US gal.)	29.4 (7.8)		29.4 (7.8)		29.4 (7.8)		29.4 (7.8)	
Coolant flow/min. — 60 Hz - lit. (US gal.)	265 (70)		265 (70)		265 (70)		265 (70)	
Heat rejection to coolant — BTU/hr.	263,000		293,000		211,200		234,000	
Inlet air — 60 Hz - m³/min. (cfm)	259 (9,128)		259 (9,128)		259 (9,128)		259 (9,128)	
Max. operating air temp onto radiator *see note — °C (°F)	60 (140)		60 (140)		60 (140)		60 (140)	
Max. operating ambient temp *see note — °C (°F)	50 (122)		50 (122)		50 (122)		50 (122)	
Max. external pressure drop on rad — in. H_2O	0.5		0.5		0.5		0.5	
COMBUSTION AIR REQUIREMENTS								
Flow at rated power — 60 Hz - m³/min. (cfm)	12.5 (442.0)		14.5 (512.3)		10.0 (353.6)		11.7 (414.8)	
EXHAUST								
Exhaust flow at rated output — 60 Hz - m³/min. (cfm)	36.8 (1301)		42.7 (1508)		28.6 (1009)		33.5 (1184)	
Max recommended back pressure — Kpa (Hg)	5.1 (1.5)		5.1 (1.5)		5.1 (1.5)		5.1 (1.5)	
Exhaust temp at rated output — °C (°F)	460 (860)		476 (890)		435 (815)		446 (835)	
Exhaust outlet size — mm (in)	127 (5.0)		127 (5.0)		127 (5.0)		127 (5.0)	
ENGINE								
Rated RPM — 60 Hz	1800		1800		1800		1800	
HP (@ rated kW) — 60 Hz	208		229		165		183	
Piston speed (mean) — 60 Hz - m/sec. (ft./min.)	7.6 (1500)		7.6 (1500)		7.6 (1500)		7.6 (1500)	
BMEP — 60 Hz - psi	249		221		177		200	
DERATION FACTORS								
Temperature								
2.4% for every 10°C above - °C	40		40		40		40	
4.1% for every 10°F above - °F	104		104		104		104	
Altitude								
0.8% for every 100 m above - m	1525		1066		1525		1066	
2.6% for every 1000 ft. above - ft.	5000		3500		5000		3500	

* Note: Values given are maximum temperatures to which power adjustments can be applied. Consult your Generac Power Systems representative if operating conditions exceed these maximums.

STANDARD ENGINE & SAFETY FEATURES

SD135/SD150

- High Coolant Temperature Automatic Shutdown
- Low Coolant Level Automatic Shutdown
- Low Oil Pressure Automatic Shutdown
- Overspeed Automatic Shutdown (Solid-state)
- Crank Limiter (Solid-state)
- Oil Drain Extension
- Radiator Drain Extension
- Factory-Installed Cool Flow Radiator
- Closed Coolant Recovery System
- UV/Ozone Resistant Hoses
- Rubber-Booted Engine Electrical Connections
- Secondary Fuel Filter
- Fuel Lockoff Solenoid
- Stainless Steel Flexible Exhaust Connection
- Battery Charge Alternator
- Battery Cables
- Battery Tray
- Vibration Isolation of Unit to Mounting Base
- 24 Volt, Solenoid-activated Starter Motor
- Air Cleaner
- Fan Guard
- Control Console
- Coolant Heater
- Isochronous Governor
- Radiator Duct Adapter

OPTIONS

- **OPTIONAL COOLING SYSTEM ACCESSORIES**
  - Coolant Heater 208/240VAC
- **OPTIONAL FUEL ACCESSORIES**
  - Flexible Fuel Lines
  - UL Listed Fuel Tanks
  - Base Tank Fuel Alarms
  - Primary Fuel Filter
- **OPTIONAL EXHAUST ACCESSORIES**
  - Critical Exhaust Silencer (Standard on enclosed gensets)
- **OPTIONAL ELECTRICAL ACCESSORIES**
  - Battery, 12 Volt, 135 A.H., 4D (2 req'd)
  - Battery, 12 Volt, 225 A.H., 8D (2 req'd)
  - 2A Battery Charger
  - 10A Dual Rate Battery Charger
  - Battery Heater
- **OPTIONAL ALTERNATOR ACCESSORIES**
  - Alternator Upsizing
  - Alternator Strip Heater
  - Alternator Tropicalization
  - Voltage Changeover Switch
  - Main Line Circuit Breaker
- **CONTROL CONSOLE OPTIONS**
  - Digital Controller H-100 (Bulletin 0172110SBY)
- **ADDITIONAL OPTIONAL EQUIPMENT**
  - Automatic Transfer Switch
  - 3 Light Remote Annunciator
  - 5 Light Remote Annunciator
  - 20 Light Remote Annunciator
  - Remote Relay Panels
  - Unit Vibration Isolators
  - Oil Make-Up System
  - Oil Heater
  - 5 Year Warranties
  - Export Boxing
  - GenLink® Communications Software
- **OPTIONAL ENCLOSURES**
  - Weather Protective
  - Sound Attenuated
  - Aluminum and Stainless Steel
  - Enclosed Muffler

Distributed by:

Design and specifications subject to change without notice. Dimensions shown are approximate. Contact your Generac dealer for certified drawings. DO NOT USE THESE DIMENSIONS FOR INSTALLATION PURPOSES.

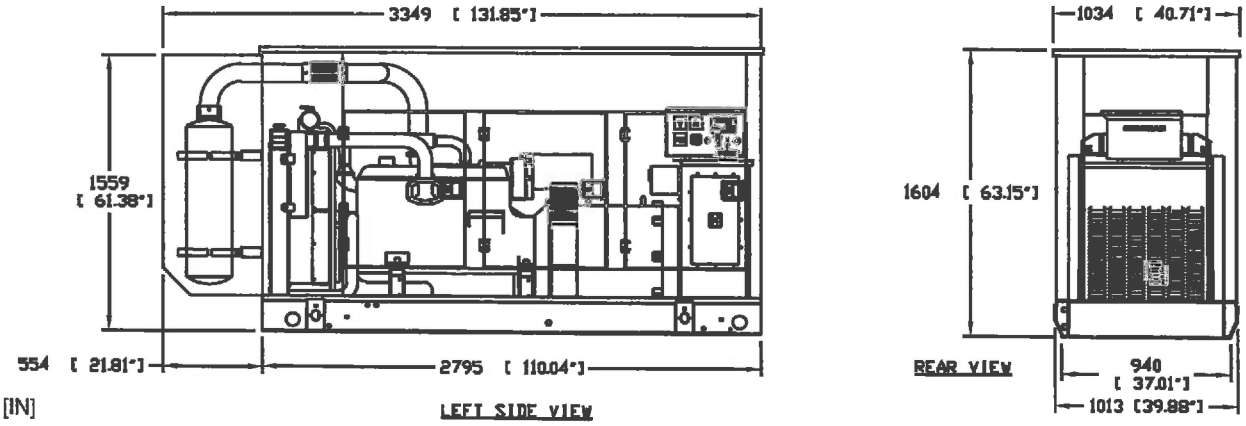

mm [IN]

©2010 Generac Power Systems, Inc. All rights reserved. All specifications are subject to change without notice. Bulletin 0172750SBY-B / Printed in U.S.A. 03/16/10

Idaho State University
Facilities Services, Building No. 18
749 E. Humbolt
Pocatello, Idaho 83209-8137

AIR QUALITY PERMIT TO CONSTRUCT EXEMPTION
Emergency Generators Nos. 7 and 8
Equipment Order Date: 8/13/2008

Idaho State University (ISU) is documenting the installation of two emergency generators at its campus in Pocatello, Idaho. In accordance with IDAPA 58.01.01.222.01.d, the generators are exempt from the requirement to obtain a permit to construct.

From IDAPA 58.01.01:
222. CATEGORY II EXEMPTION
No permit to construction is required for the following sources.

01. Exempt Source. A source that satisfies the criteria set forth in Section 220 and that is specified below.

...

d. Stationary internal combustion engines used exclusively for emergency purposes which are operated less than five hundred (500) hours per year and are fueled by natural gas, propane gas, liquefied petroleum gas, distillate fuel oils, residual fuel oils, and diesel fuel; waste oil, gasoline, or refined gasoline shall not be used.

Emergency Generators Nos. 7 and 8 are identical units, each powered by a 197 brake horsepower (bhp) diesel engine. Emergency Generator No. 7 is designed to provide emergency power to Pharmacy Building #8, while Emergency Generator No. 8 is designed to provide emergency power to Life Science Building #65. Manufacturer's specifications are attached, including a *Statement of Exhaust Emissions*. Except in emergency situations, the units will only be operated to perform maintenance and readiness checks. Emergency Generator Nos. 7 and 8 are subject to 40 CFR Part 60, Subpart IIII NESHAP for Stationary Compression Ignition Internal Combustion Engines. In accordance with § 60.4211(f), maintenance and readiness testing of subject emergency engines is limited to 100 hours per year.

220. GENERAL EXEMPTION CRITERIA FOR PERMIT TO CONSTRUCT EXEMPTIONS

01. General exemption Criteria. Sections 220 through 223 may be used by owners or operator to exempt certain sources from the requirement to obtain a permit to construct. ..... No permit to construct is required for a source that satisfies all of the following criteria, in addition to the criteria set forth at Sections 221, 222, or 223:

a. The maximum capacity of a source to emit an air pollutant under its physical and operational design without consideration of limitations on emissions such as air pollution control equipment, restrictions on hours of operation and restriction on the type and amount of material combusted stored or processed would not:

i. Equal or exceed one hundred (100) tons per year of any regulated air pollutant.

ii. Cause an increase in the emissions of a major facility that equals or exceeds the significant emissions rates set out in the definition of significant at Section 006.

b. Combination. The source is not part of a proposed new major facility or part of a proposed major modification.

Estimated emissions from Emergency Generators Nos. 7 and 8 are provided in Table 1, attached. Estimated uncontrolled emissions at 8760 hours per year of operation and estimated maximum actual emissions at 100 hours per year of operation are provided. Uncontrolled emissions of all regulated pollutants are less than 100 tons per year, as required by 58.01.01.220.01.a.i.

ISU is not a major facility, so the requirements of 220.a.ii do not apply. ISU is an existing minor facility and the installation of this generator is not part of a major modification, so the requirements of 220.b are satisfied.

Therefore, since Emergency Generators Nos. 7 and 8 are specified sources (IDAPA 58.01.01.222.01.d) and since uncontrolled emissions are less than 100 tons per year, the facility is not major, and the sources are not part of a major modification, the criteria for exemption from the requirements to obtain a permit to construct are satisfied (IDAPA 58.01.01.220.01.a-b). In accordance with IDAPA 58.01.01.220.02, this exemption documentation will be maintained in ISU records for not less than five (5) years or for the life of the source, whichever is greater.

Enc.: Table 1, Statement of Exhaust Emissions, Equipment Specification Sheets (4)

Prepared by: TORF Environmental Management , 3459 E Boulder Heights Dr, Boise, ID 83712 (S. Stine)

Table 1: Emergency Generators Nos. 7 & 8 Estimated Emissions

Emergency Generator	**No. 7**	**No. 8**
Location	Pharmacy Building #8	Life Science Building #65
Manufacturer	Generac	Generac
Model	SD135	SD135
Mfr. Production Date	5/26/2008	6/3/2008
Order Date	8/12/2008	8/13/2008
Startup Date	Jul-09	Jul-09
Rated Generator Power (kWe)	135	135
Rated Engine Power (bhp)	197	197
Fuel	Diesel	Diesel
Fuel Rate at 100% (gph)	9.89	9.89
EPA Certification	Tier III	Tier III

Annual Emissions	$PM_{2.5}$	PM_{10}	SO_2	NO_x	CO	VOC	Lead	THAPs
Emission Factor Source	Mfr.	Mfr.	AP-42 3.4-1	Mfr.	Mfr.	Mfr. (THC)	NA	Mfr. (THC)
Emission Factor (lb/bhp-hr)	2.40E-04	2.40E-04	1.21E-05	6.08E-03	2.16E-03	2.47E-04	NA	2.47E-04
Uncontrolled Operations (hr/yr)	8760							
Uncontrolled Emissions (tons/yr)	0.41	0.41	0.02	10.49	3.73	0.43	NA	0.43
Maximum Actual Operations (hr/yr)	100							
Maximum Actual Emissions (tons/yr)	0.005	0.005	0.000	0.120	0.043	0.005	NA	0.005

Notes:

1. SO2 emissions based on the use of low sulfur diesel fuel with 15 ppm max sulfur.

GENERAC®
POWER SYSTEMS, INC.
STATEMENT OF EXHAUST EMISSIONS
JOHN DEERE DIESEL FUELED GENERATOR

The measured emission values provided here are proprietary to Generac and its' authorized dealers. This information may only be disseminated upon request, to regulatory governmental bodies for emissions permitting purposes or to specifying organizations as submittal data when expressly required by project specifications, and shall remain confidential and not open to public viewing. This information is not intended for compilation or sales purposes and may not be used as such, nor may it be reproduced without the expressed written permission of Generac Power Systems, Inc. The data provided shall not be meant to include information made public by Generac.

Generator Model	**SD135**	Aspiration	**Turbocharged**
kW_E Rating	**135**	Engine Speed	**1800 RPM**
Engine Family	**8JDXL06.8104**	EPA Certificate #	**JDX-NRCI-08-03**
Engine Model	**6068HF285 K,L**	CARB Certificate #	**U-R-004-0312**
Rated Power kWm	**147**	Tier	**Tier III**

Certificates are available on the John Deere Website. *www.deere.com/en_US/rg/servicesupport/emissions_certificates/certified/2008.html*

John Deere Emissions based on Rated kW_E of specific Models.
(These values are Actual Exhaust Emissions during a 5 Mode Test at Rated kW_E)

CO	HC	NOx	PM	
1.313	**0.150**	**3.698**	**0.146**	Grams/kW-hr
0.98	**0.112**	**2.76**	**0.109**	Grams bhp-hr

- The stated values are actual exhaust emission test measurements obtained from a unit representative of the generator type and engine described above.
- Values based on 5-mode testing are official data of record as submitted to regulatory agencies for certification purposes. Testing was conducted in accordance with prevailing EPA & CARB protocols, which are typically accepted by SCAQMD and other regional authorities.
- Values based on full load testing are provided for reference only due to 5-mode test data being unavailable. Data may be based on testing performed by either the engine supplier or Generac Power Systems.
- No emission values provided above are to be construed as guarantees of emission levels for any given Generac generator unit.
- Generac Power Systems reserves the right to revise this information without prior notice.
- Consult state and local regulatory agencies for specific permitting requirements.
- The emission performance data supplied by the equipment manufacturer is only one element required toward completion of the permitting and installation process. State and local regulations may vary on a case-by-case basis and must be consulted by the permit applicant/equipment owner prior to equipment purchase or installation. The data supplied herein by Generac Power Systems cannot be construed as a guarantee of installability of the generating set.

INDUSTRIAL SALES
P.O. BOX 8 WAUKESHA, WI 53187 262-544-4800 FAX 262-544-4854

SD135
SD150

Liquid Cooled Diesel Engine Generator Sets

Standby Power Rating
135KW 60Hz
150KW 60 Hz

Prime Power Rating
120KW 60 Hz
135KW 60 Hz

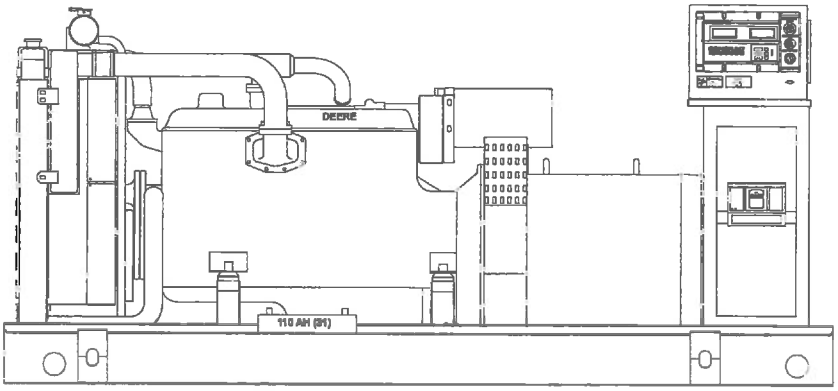

Power Matched
GENERAC 6.8 DTA ENGINE
Turbo-Charged, Aftercooled
EPA Tier III Compliant

FEATURES

- **INNOVATIVE DESIGN & PROTOTYPE TESTING** are key components of GENERAC'S success in "IMPROVING POWER BY DESIGN." But it doesn't stop there. Total commitment to component testing, reliability testing, environmental testing, destruction and life testing, plus testing to applicable CSA, NEMA, EGSA, and other standards, allows you to choose GENERAC POWER SYSTEMS with the confidence that these systems will provide superior performance.

- **TEST CRITERIA:**
  - ✓ PROTOTYPE TESTED
  - ✓ SYSTEM TORSIONAL TESTED
  - ✓ ELECTRO-MAGNETIC INTERFERENCE
  - ✓ NEMA MG1 EVALUATION
  - ✓ MOTOR STARTING ABILITY
  - ✓ SHORT CIRCUIT TESTING
  - ✓ UL 2200 COMPLIANCE AVAILABLE

- **MICROPROCESSOR CONTROLLED VOLTAGE AND FREQUENCY REGULATION.** Digital microprocessor control of engine and generator functions and protective systems integrated into a single controller for unparalleled performance and reliability. LCD display of all engine and generator functions and remote monitoring via GenLink® software.

- **SINGLE SOURCE SERVICE RESPONSE** from Generac's dealer network provides parts and service know-how for the entire unit, from the engine to the smallest electronic component. You are never on your own when you own a GENERAC POWER SYSTEM.

- **ECONOMICAL DIESEL POWER.** Low cost operation due to modern diesel engine technology. Better fuel utilization plus lower cost per gallon provide real savings.

- **LONGER ENGINE LIFE.** Generac heavy-duty diesels provide long and reliable operating life.

- **GENERAC TRANSFER SWITCHES AND ACCESSORIES.** Long life and reliability is synonymous with GENERAC POWER SYSTEMS. One reason for this confidence is that the GENERAC product line includes its own transfer systems, accessories, and controls for total system compatibility.

GENERAC®

APPLICATION & ENGINEERING DATA

SD135/SD150

GENERATOR SPECIFICATIONS

TYPE ..... Four-pole, revolving field
ROTOR INSULATION ..... Class H
STATOR INSULATION ..... Class H
TOTAL HARMONIC DISTORTION ..... <3.0%
TELEPHONE INFLUENCE FACTOR (TIF) ..... <50
ALTERNATOR ..... Self-ventilated and drip-proof
BEARINGS (PRE-LUBED & SEALED) 2
COUPLING ..... Flexible Disc
LOAD CAPACITY (STANDBY) 100%

NOTE: Emergency loading in compliance with NFPA 99, NFPA 110. Generator rating and performance in accordance with ISO8528-5, BS5514, SAE J1349, ISO3046 and DIN6271 standards.

EXCITATION SYSTEM

PERMANENT MAGNET PILOT EXCITER ..... Eighteen-pole exciter ✓
Magnetically coupled DC current ✓
Mounted outboard of main bearing ✓
REGULATION ..... H100 Controller Digital ✓
3 Phase Sensing, ± 1% regulation ✓

GENERATOR FEATURES

- ❒ Revolving field heavy duty generator
- ❒ Directly connected to the engine
- ❒ Operating temperature rise 120 °C above a 40 °C ambient
- ❒ Insulation is Class H rated at 150 °C rise
- ❒ All prototype models have passed three phase short circuit testing

CONTROL PANEL FEATURES

❒ TWO FOUR LINE LCD DISPLAYS READ:

- Voltage (all phases)
- Power factor
- kVAR
- Engine speed
- Run hours
- Fault history
- Coolant temperature
- Low oil pressure shutdown
- Overvoltage
- Low coolant level
- Not in auto position (flashing light)
- ATS selection
- Current (all phases)
- kW
- Transfer switch status
- Low fuel pressure
- Service reminders
- Oil pressure
- Time and date
- High coolant temperature shutdown
- Overspeed
- Low coolant level
- Exercise speed

❒ INTERNAL FUNCTIONS:

- I^2T function for alternator protection from line to neutral and line to line short circuits
- Emergency stop
- Programmable auto crank function
- 2 wire start for any transfer switch
- Communicates with the Generac HTS transfer switch
- Built-in 7 day exerciser
- Adjustable engine speed at exerciser
- RS232 port for GenLink® control
- RS485 port remote communication
- Canbus addressable
- Governor controller and voltage regulator are built into the master control board
- Temperature range -40 °C to 70 °C

ENGINE SPECIFICATIONS

MAKE ..... DEERE
MODEL ..... See Exhaust Emission Sheet
CYLINDERS ..... 6 in-line
DISPLACEMENT ..... 6.8 Liters (415 cu. in.)
BORE ..... 106 mm (4.19 in.)
STROKE ..... 127 mm (5.0 in.)
COMPRESSION RATIO 17.0:1
INTAKE AIR ..... Turbocharged, Aftercooled
NUMBER OF MAIN BEARINGS 7
CONNECTING RODS ..... 6-Carbon Steel
CYLINDER HEAD ..... Cast Iron with Overhead Valve
PISTONS ..... 6-Heat Resistant Aluminum Alloy
CRANKSHAFT ..... Case Hardened, Die Forged, Carbon Steel

VALVE TRAIN

LIFTER TYPE ..... Solid
INTAKE VALVE MATERIAL ..... Special Heat Resistant Steel
EXHAUST VALVE MATERIAL ..... Special Heat Resistant Steel
HARDENED VALVE SEATS ..... Replaceable
VALVES PER CYLINDER 2

ENGINE GOVERNOR

❒ ELECTRONIC ..... Standard
FREQUENCY REGULATION, NO-LOAD TO FULL LOAD ... Isochronous
STEADY STATE REGULATION ..... ±0.25%

LUBRICATION SYSTEM

TYPE OF OIL PUMP ..... Forced Feed Lubrication w/ Oil Pump
OIL FILTER ..... Full Flow, Cartridge
CRANKCASE CAPACITY ..... 22.7 Liters (6.0 U.S. gallons)

COOLING SYSTEM

TYPE OF SYSTEM ..... Pressurized, closed recovery
WATER PUMP ..... Pre-lubed, Self-Sealing
TYPE OF FAN ..... Pusher
NUMBER OF FAN BLADES 7
DIAMETER OF FAN ..... 650 mm (26.0 in.)
COOLANT HEATER ..... 120V, 1800 W

FUEL SYSTEM

FUEL ..... #2D Fuel (Min Cetane #40)
(Fuel should conform to ASTM Spec.)
FUEL FILTER ..... 10 Micron
FUEL INJECTION PUMP ..... ZEXEL
FUEL PUMP ..... Mechanical
INJECTORS ..... Multi-hole, nozzle type
ENGINE TYPE ..... Direct injection
FUEL LINE (Supply) ..... 9.53 mm (0.375 in.)
FUEL RETURN LINE ..... 9.53 mm (0.375 in.)

ELECTRICAL SYSTEM

BATTERY CHARGE ALTERNATOR ..... 45 Amps at 24 V
STARTER MOTOR ..... 24 V
RECOMMENDED BATTERY 2-12V, 31
GROUND POLARITY ..... Negative

Rating definitions - Standby: Applicable for supplying emergency power for the duration of the utility power outage. No overload capability is available for this rating. (All ratings in accordance with BS5514, ISO3046 and DIN6271). Prime (Unlimited Running Time): Applicable for supplying electric power in lieu of commercially purchased power. Prime power is the maximum power available at variable load. A 10% overload capacity is available for 1 hour in 12 hours. (All ratings in accordance with BS5514, ISO3046, ISO8528 and DIN6271).

GENERAC®

SD135/SD150

OPERATING DATA

	STANDBY				PRIME			
	SD135		SD150		SD135		SD150	
GENERATOR OUTPUT VOLTAGE/KW-60Hz	kW	Rated AMP	kW	Rated AMP	kW	Rated AMP	kW	Rated AMP
120/240V, 1-phase, 1.0 pf (NOTE: Consult your Generac dealer for additional voltages.)	135	563	150	625	120	500	135	563
120/208V, 3-phase, 0.8 pf	135	468	150	520	120	416	135	468
120/240V, 3-phase, 0.8 pf	135	406	150	451	120	361	135	406
277/480V, 3-phase, 0.8 pf	135	203	150	226	120	180	135	203
600V, 3-phase, 0.8 pf	135	162	150	180	120	144	135	162
MOTOR STARTING								
Maximum KVA with 35% instantaneous voltage dip	208/240V	400/480V	208/240V	400/480V	208/240V	400/480V	208/240V	400/480V
with standard alternator; 60 Hz	348	464	348	464	348	464	348	464
with optional alternator; 60 Hz	490	653	490	653	490	653	490	653
FUEL								
Fuel consumption—60 Hz — Load	25%	50%	75%	100%	25%	50%	75%	100%	25%	50%	75%	100%	25%	50%	75%	100%
kW @ %	33.75	67.5	101.25	135	37.5	75	112.5	150	27	54	81	108	30	60	90	120
gal./hr.	2.87	5.45	7.95	9.89	3.11	5.89	8.60	10.83	2.29	4.36	6.36	7.91	2.48	4.71	6.88	8.66
Liters/Hr.	10.85	20.61	30.11	37.43	11.75	22.30	32.55	40.99	8.68	16.49	24.09	29.94	9.40	17.84	26.04	32.79
COOLING								
Coolant capacity — System - lit. (US gal.)	42.4 (11.2)		42.4 (11.2)		42.4 (11.2)		42.4 (11.2)	
Engine - lit. (US gal.)	13.0 (3.4)		13.0 (3.4)		13.0 (3.4)		13.0 (3.4)	
Radiator - lit. (US gal.)	29.4 (7.8)		29.4 (7.8)		29.4 (7.8)		29.4 (7.8)	
Coolant flow/min. — 60 Hz - lit. (US gal.)	265 (70)		265 (70)		265 (70)		265 (70)	
Heat rejection to coolant — BTU/hr.	263,000		293,000		211,200		234,000	
Inlet air — 60 Hz - m³/min. (cfm)	259 (9,128)		259 (9,128)		259 (9,128)		259 (9,128)	
Max. operating air temp onto radiator *see note — °C (°F)	60 (140)		60 (140)		60 (140)		60 (140)	
Max. operating ambient temp *see note — °C (°F)	50 (122)		50 (122)		50 (122)		50 (122)	
Max. external pressure drop on rad — in. H_2O	0.5		0.5		0.5		0.5	
COMBUSTION AIR REQUIREMENTS								
Flow at rated power — 60 Hz - m³/min. (cfm)	12.5 (442.0)		14.5 (512.3)		10.0 (353.6)		11.7 (414.8)	
EXHAUST								
Exhaust flow at rated output — 60 Hz - m³/min. (cfm)	36.8 (1301)		42.7 (1508)		28.6 (1009)		33.5 (1184)	
Max recommended back pressure — Kpa (Hg)	5.1 (1.5)		5.1 (1.5)		5.1 (1.5)		5.1 (1.5)	
Exhaust temp at rated output — °C (°F)	460 (860)		476 (890)		435 (815)		446 (835)	
Exhaust outlet size — mm (in)	127 (5.0)		127 (5.0)		127 (5.0)		127 (5.0)	
ENGINE								
Rated RPM — 60 Hz	1800		1800		1800		1800	
HP (@ rated kW) — 60 Hz	208		229		165		183	
Piston speed (mean) — 60 Hz - m/sec. (ft./min.)	7.6 (1500)		7.6 (1500)		7.6 (1500)		7.6 (1500)	
BMEP — 60 Hz - psi	249		221		177		200	
DERATION FACTORS								
Temperature								
2.4% for every 10°C above - °C	40		40		40		40	
4.1% for every 10°F above - °F	104		104		104		104	
Altitude								
0.8% for every 100 m above - m	1525		1066		1525		1066	
2.6% for every 1000 ft. above - ft.	5000		3500		5000		3500	

* Note: Values given are maximum temperatures to which power adjustments can be applied. Consult your Generac Power Systems representative if operating conditions exceed these maximums.

STANDARD ENGINE & SAFETY FEATURES

SD135/SD150

- High Coolant Temperature Automatic Shutdown
- Low Coolant Level Automatic Shutdown
- Low Oil Pressure Automatic Shutdown
- Overspeed Automatic Shutdown (Solid-state)
- Crank Limiter (Solid-state)
- Oil Drain Extension
- Radiator Drain Extension
- Factory-Installed Cool Flow Radiator
- Closed Coolant Recovery System
- UV/Ozone Resistant Hoses
- Rubber-Booted Engine Electrical Connections
- Secondary Fuel Filter
- Fuel Lockoff Solenoid
- Stainless Steel Flexible Exhaust Connection
- Battery Charge Alternator
- Battery Cables
- Battery Tray
- Vibration Isolation of Unit to Mounting Base
- 24 Volt, Solenoid-activated Starter Motor
- Air Cleaner
- Fan Guard
- Control Console
- Coolant Heater
- Isochronous Governor
- Radiator Duct Adapter

OPTIONS

- **OPTIONAL COOLING SYSTEM ACCESSORIES**
  - Coolant Heater 208/240VAC
- **OPTIONAL FUEL ACCESSORIES**
  - Flexible Fuel Lines
  - UL Listed Fuel Tanks
  - Base Tank Fuel Alarms
  - Primary Fuel Filter
- **OPTIONAL EXHAUST ACCESSORIES**
  - Critical Exhaust Silencer (Standard on enclosed gensets)
- **OPTIONAL ELECTRICAL ACCESSORIES**
  - Battery, 12 Volt, 135 A.H., 4D (2 req'd)
  - Battery, 12 Volt, 225 A.H., 8D (2 req'd)
  - 2A Battery Charger
  - 10A Dual Rate Battery Charger
  - Battery Heater
- **OPTIONAL ALTERNATOR ACCESSORIES**
  - Alternator Upsizing
  - Alternator Strip Heater
  - Alternator Tropicalization
  - Voltage Changeover Switch
  - Main Line Circuit Breaker
- **CONTROL CONSOLE OPTIONS**
  - Digital Controller H-100 (Bulletin 0172110SBY)
- **ADDITIONAL OPTIONAL EQUIPMENT**
  - Automatic Transfer Switch
  - 3 Light Remote Annunciator
  - 5 Light Remote Annunciator
  - 20 Light Remote Annunciator
  - Remote Relay Panels
  - Unit Vibration Isolators
  - Oil Make-Up System
  - Oil Heater
  - 5 Year Warranties
  - Export Boxing
  - GenLink® Communications Software
- **OPTIONAL ENCLOSURES**
  - Weather Protective
  - Sound Attenuated
  - Aluminum and Stainless Steel
  - Enclosed Muffler

Distributed by:

Design and specifications subject to change without notice. Dimensions shown are approximate. Contact your Generac dealer for certified drawings. DO NOT USE THESE DIMENSIONS FOR INSTALLATION PURPOSES.

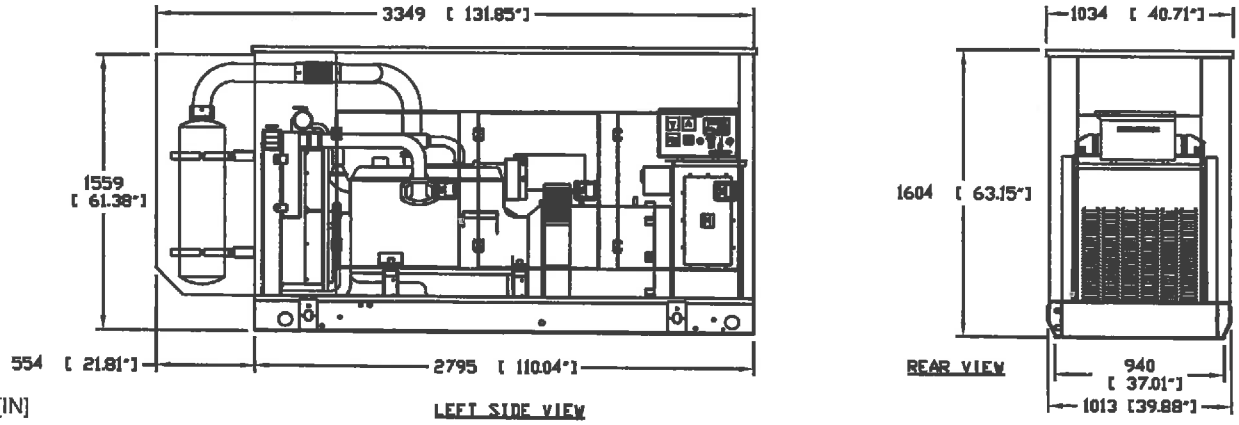

mm [IN]

©2010 Generac Power Systems, Inc. All rights reserved. All specifications are subject to change without notice. Bulletin 0172750SBY-B / Printed in U.S.A. 03/16/10

Idaho State University
Facilities Services, Building No. 18
749 E. Humbolt
Pocatello, Idaho 83209-8137

AIR QUALITY PERMIT TO CONSTRUCT EXEMPTION
Emergency Generator No. 9
Equipment Order Date: 11/25/2008

Idaho State University (ISU) is documenting the installation of an emergency generator at its campus in Pocatello, Idaho. In accordance with IDAPA 58.01.01.222.01.d, the generator is exempt from the requirement to obtain a permit to construct.

From IDAPA 58.01.01:
222. CATEGORY II EXEMPTION
No permit to construction is required for the following sources.

01. Exempt Source. A source that satisfies the criteria set forth in Section 220 and that is specified below.

...

d. Stationary internal combustion engines used exclusively for emergency purposes which are operated less than five hundred (500) hours per year and are fueled by natural gas, propane gas, liquefied petroleum gas, distillate fuel oils, residual fuel oils, and diesel fuel; waste oil, gasoline, or refined gasoline shall not be used.

Emergency Generator No.9 is powered by a 954 brake horsepower (bhp) diesel engine. The unit is designed to provide emergency power to Business Administration Building #5. Manufacturer's specifications are attached, including a *Statement of Exhaust Emissions*. Except in emergency situations, the unit will only be operated to perform maintenance and readiness checks. Emergency Generator No. 9 is subject to 40 CFR Part 60, Subpart IIII NESHAP for Stationary Compression Ignition Internal Combustion Engines. In accordance with § 60.4211(f), maintenance and readiness testing of subject emergency engines is limited to 100 hours per year.

220. GENERAL EXEMPTION CRITERIA FOR PERMIT TO CONSTRUCT EXEMPTIONS

01. General exemption Criteria. Sections 220 through 223 may be used by owners or operator to exempt certain sources from the requirement to obtain a permit to construct. ..... No permit to construct is required for a source that satisfies all of the following criteria, in addition to the criteria set forth at Sections 221, 222, or 223:

a. The maximum capacity of a source to emit an air pollutant under its physical and operational design without consideration of limitations on emissions such as air pollution control equipment, restrictions on hours of operation and restriction on the type and amount of material combusted stored or processed would not:

i. Equal or exceed one hundred (100) tons per year of any regulated air pollutant.

ii. Cause an increase in the emissions of a major facility that equals or exceeds the significant emissions rates set out in the definition of significant at Section 006.

b. Combination. The source is not part of a proposed new major facility or part of a proposed major modification.

Estimated emissions from Emergency Generator No. 9 are provided in Table 1, attached. Estimated uncontrolled emissions at 8760 hours per year of operation and estimated maximum actual emissions at 100 hours per year of operation are provided. Uncontrolled emissions of all regulated pollutants are less than 100 tons per year, as required by 58.01.01.220.01.a.i.

ISU is not a major facility, so the requirements of 220.a.ii do not apply. ISU is an existing minor facility and the installation of this generator is not part of a major modification, so the requirements of 220.b are satisfied.

Therefore, since Emergency Generator No. 9 is a specified source (IDAPA 58.01.01.222.01.d) and since uncontrolled emissions are less than 100 tons per year, the facility is not major, and the source is not part of a major modification, the criteria for exemption from the requirements to obtain a permit to construct are satisfied (IDAPA 58.01.01.220.01.a-b). In accordance with IDAPA 58.01.01.220.02, this exemption documentation will be maintained in ISU records for not less than five (5) years or for the life of the source, whichever is greater.

Enc.: Table 1, Statement of Exhaust Emissions, Equipment Specification Sheets (5)

Prepared by: TORF Environmental Management , 3459 E Boulder Heights Dr, Boise, ID 83712 (S. Stine)

Table 1: Emergency Generator No. 9 Estimated Emissions

Emergency Generator	**No. 9**
Location	Business Admin. Bldg #5
Manufacturer	Generac
Model	SD600
Mfr. Production Date	10/22/2008
Order Date	11/25/2008
Startup Date	Jul-09
Rated Generator Power (kWe)	600
Rated Engine Power (bhp)	954
Fuel	Diesel
Fuel Rate at 100% (gph)	46.2
EPA Certification	Tier II

Annual Emissions	$PM_{2.5}$	PM_{10}	SO_2	NO_x	CO	VOC	Lead	THAPs
Emission Factor Source	Mfr.	Mfr.	AP-42 3.4-1	Mfr. (+ THC)	Mfr.	AP-42 3.4-1	NA	AP-42 VOC
Emission Factor (lb/bhp-hr)	1.48E-04	1.48E-04	1.21E-05	1.05E-02	1.48E-03	7.05E-04	NA	7.05E-04
Uncontrolled Operations (hr/yr)	8760							
Uncontrolled Emissions (tons/yr)	0.62	0.62	0.05	43.9	6.17	2.95	NA	2.95
Maximum Actual Operations (hr/yr)	100							
Maximum Actual Emissions (tons/yr)	0.007	0.007	0.001	0.502	0.070	0.034	NA	0.034

Notes:

1. SO2 emissions based on the use of low sulfur diesel fuel with 15 ppm max sulfur.
2. Manufacturer's emission statement combined NOx and THC emissions. Since most of this will be NOx, AP-42 Section 3.4 TOC emission rate used to estimate VOC and THAP emissions.

GENERAC® | INDUSTRIAL POWER

SD600

Industrial Diesel Generator Set

EPA CERTIFIED STATIONARY EMERGENCY

600 kW Diesel

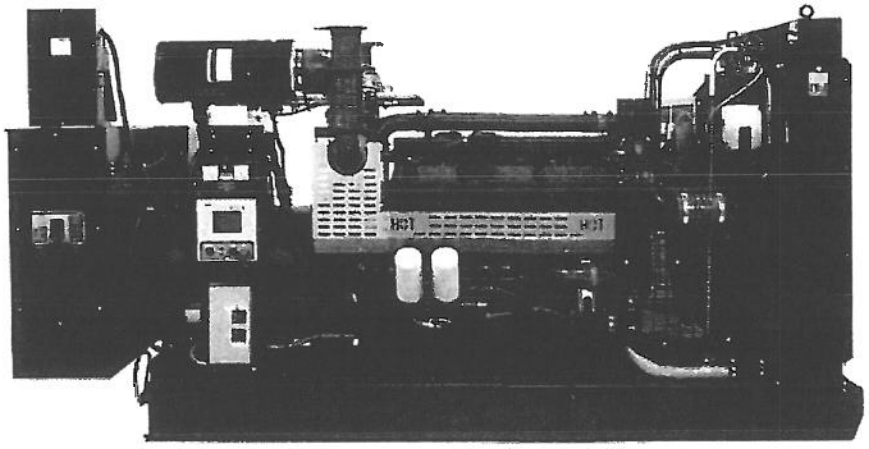

Standby Power Rating
600KW 60 Hz

Prime Power Rating
547KW 60 Hz

EPA Certified Prime ratings are not available in the U.S. or its Territories for engine model year 2011 and beyond

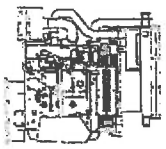

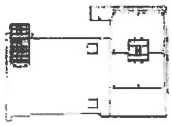

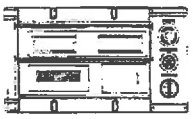

features	benefits
Generator Set	
• PROTOTYPE & TORSIONALLY TESTED	▶ PROVIDES A PROVEN UNIT
• UL2200 TESTED	▶ ENSURES A QUALITY PRODUCT
• RHINOCOAT PAINT SYSTEM	▶ IMPROVES RESISTANCE TO ELEMENTS
• WIDE RANGE OF ENCLOSURES AND TANKS	▶ PROVIDES A SINGLE SOURCE SOLUTION
Engine	
• EPA TIER COMPLIANT	▶ ENVIRONMENTALLY FRIENDLY
• INDUSTRIAL TESTED, GENERAC APPROVED	▶ FOR INDUSTRIAL APPLICATIONS
• POWER-MATCHED OUTPUT	▶ ENGINEERED FOR PERFORMANCE
• INDUSTRIAL GRADE	▶ IMPROVES LONGEVITY AND RELIABILITY
Alternator	
• TWO-THIRDS PITCH	▶ ELIMINATES HARMFUL 3RD HARMONIC
• LAYER WOUND ROTOR & STATOR	▶ IMPROVES COOLING
• CLASS H MATERIALS	▶ HEAT TOLERANT DESIGN
• DIGITAL 3-PHASE VOLTAGE CONTROL	▶ FAST AND ACCURATE RESPONSE
Controls	
• ENCAPSULATED BOARD W/ SEALED HARNESS	▶ EASY, AFFORDABLE REPLACEMENT
• 4-20mA VOLTAGE-TO-CURRENT SENSORS	▶ NOISE RESISTANT 24/7 MONITORING
• SURFACE-MOUNT TECHNOLOGY	▶ PROVIDES VIBRATION RESISTANCE
• ADVANCED DIAGNOSTICS & COMMUNICATIONS	▶ HARDENED RELIABILITY

primary codes and standards

NEMA

GENERAC | INDUSTRIAL POWER

SD600

application and engineering data

ENGINE SPECIFICATIONS

General

Make	Doosan
EPA Emissions Compliance	Stationary Emergency
EPA Emissions Engine Reference	See Emissions Data Sheet
Cylinder #	12
Type	V-12
Displacement - L (cu. in.)	22.0(1338)
Bore - mm (in.)	128(5.04)
Stroke - mm (in.)	142(5.60)
Compression Ratio	15.0:1
Intake Air Method	Turbocharged/Aftercooled
Number of Main Bearings	6
Connecting Rod Type	I-Beam Section
Cylinder Head Type	3 Cylinder Bank Heads
Piston Type	Open Chamber/Oil Cooled
Crankshaft Type	Counter Weighted Type

Valve Train

Lifter Type	Solid
Intake Valve Material	High Temp, Hardened
Exhaust Valve Material	High Temp, Hardened

Engine Governing

Governor	Electronic Isochronous
Frequency Regulation (Steady State)	+/- 0.25%

Lubrication System

Oil Pump Type	Gear
Oil Filter Type	Full-Flow Cartridge
Crankcase Capacity - L (gal)(qts)	42(11.1)

Cooling System

Cooling System Type	Closed Recovery
Water Pump	Centrifugal Type, Belt Driven
Fan Type	Pusher
Fan Blade Number	9
Fan Diameter mm (in.)	915(36)
Coolant Heater Wattage	240V (4000W)
Coolant Heater Standard Voltage	240VAC

Fuel System

Fuel Type	Ultra Low Sulfur Diesel Fuel
Fuel Specifications	ASTM
Fuel Filtering (microns)	10
Fuel Inject Pump Make	Bosch P Type x 1
Fuel Pump Type	Engine Driven Gear
Injector Type	Bosch Multi-Hole
Engine Type	V-Type, 4 Cycle
Fuel Supply Line - mm (in.)	1/2" FNPT
Fuel Return Line - mm (in.)	5/16" FNPT

Engine Electrical System

System Voltage	24VDC
Battery Charging Alternator	45A
Battery Size (at 0 oC)	2x700CCA/90AH
Battery Group	31
Battery Voltage	(2) 12VDC
Ground Polarity	Negative

ALTERNATOR SPECIFICATIONS

Model	Generac WEG
Poles	4
Field Type	Revolving
Insulation Class - Rotor	H
Insulation Class - Stator	H
Total Harmonic Distortion	<3%
Telephone Interference Factor (TIF)	<50
Alternator Type	Self-Ventilated, Drip-Proof
Bearings	Single Sealed Cartridge
Coupling	Direct, Flexible Disc
Load Capacity - Standby	100%
Load Capacity - Prime	110%
Prototype Short Circuit Test	Y

Voltage Regulator Type	Digital
Number of Sensed Phases	All
Regulation Accuracy (Steady State)	+/- 0.25%

CODES AND STANDARDS COMPLIANCE (WHERE APPLICABLE)

NFPA 99
NFPA 110
ISO 8528-5
ISO 1708A.5
ISO 3046
BS5514
SAE J1349
DIN6271
IEEE C62.41 TESTING
NEMA ICS 1

Rating Definitions:
Standby – Applicable for a varying emergency load for the duration of a utility power outage with no overload capability. (Max. load factor = 70%)
Prime – Applicable for supplying power to a varying load in lieu of utility for an unlimited amount of running time. (Max. load factor = 80%) A 10% overload capacity is available for 1 out of every 12 hours.

GENERAC | INDUSTRIAL POWER

600 kW Diesel

SD600 operating data (60Hz)

POWER RATINGS (kW)

	STANDBY Amps:			PRIME Amps:		
Single-Phase 120/240VAC @1.0pf	600	Amps:	2081	547	Amps:	1898
Three-Phase 120/208VAC @0.8pf	600	Amps:	1804	547	Amps:	1645
Three-Phase 120/240VAC @0.8pf	600	Amps:	902	547	Amps:	821
Three-Phase 277/480VAC @0.8pf	600	Amps:	722	547	Amps:	658
Three-Phase 600VAC @0.8pf						

STARTING CAPABILITIES (sKVA)

sKVA vs. Voltage Dip

Alternator	kW	480VAC 10%	15%	20%	25%	30%	35%	208/240VAC 10%	15%	20%	25%	30%	35%
Standard*	600	743	1114	1486	1857	2229	2600	543	814	1086	1357	1629	1900
Upsize 1**	832	757	1136	1514	1893	2271	2650	571	857	1143	1429	1714	2000
Upsize 2**	-	-	-	-	-	-	-	-	-	-	-	-	-

*All Generac Industrial alternators utilize Class H materials. Standard alternator provides less than or equal to Class F temperature rise. Upsize 1 provides less than or equal to Class B temperature rise. Upsize 2 provides Class A temperature rise. ** 208VAC Upsize is 700kW alternator. Consult factory for 600VAC.

FUEL

Fuel Pump Lift - in (m)
39

Fuel Consumption Rates

Percent Load	STANDBY gph	STANDBY lph	Percent Load	PRIME gph	PRIME lph
25%	14.4	54.5	25%	14.1	53.4
50%	[illegible]	[illegible]	50%	[illegible]	[illegible]
75%	36.6	138.6	75%	32.3	122.4
100%	[illegible]	[illegible]	100%	[illegible]	[illegible]

COOLING

Coolant Capacities - Gal (L)	
System	34.6 (131)
Engine	9.5 (36)
Radiator	25 (95)

		STANDBY	PRIME
Coolant Flow per Minute	gpm (lpm)	230 (870)	231 (870)
Heat rejection to Coolant	BTU/mm	1,740,000	1,566,000
Inlet Air	cfm (m3/hr)	23,500 (665)	23,500 (665)
Max. Operating Radiator Air Temp	F° (C°)	140 (60)	140 (60)
Max. Operating Ambient Temperature	F° (C°)	122 (50)	122 (50)

COMBUSTION AIR REQUIREMENTS

		STANDBY	PRIME
Flow at Rated Power	cfm (m3/min)	1959 (55.5)	1716 (48.6)

EXHAUST

Exhaust Outlet Size - N.P.T. (female)
2x8", or 1x10" ANSI (Open Sets)

		STANDBY	PRIME
Exhaust Flow (Rated Output)	cfm (m3/hr)	6419 (182)	5615 (159)
Maximum Backpressure	inHg (Kpa)	1.5 (5.1)	1.5 (5.1)
Exhaust Temp (Rated Output)	°F (°C)	1300 (704)	1141 (616)

ENGINE

		STANDBY	PRIME
Rated Engine Speed	rpm	1800	1800
Horsepower at Rated kW	hp	954	859
Piston Speed	ft/min (m/min)	1677 (8.5)	1677 (8.5)
BMEP	psi	313	274

Deration – Operational characteristics consider maximum ambient conditions. Derate factors may apply under atypical site conditions. Please consult a Generac Power Systems Industrial Dealer for additional details. All performance ratings in accordance with ISO3046, BS5514, ISO8528 and DIN6271 standards.

GENERAC | INDUSTRIAL POWER

SD600 standard features and options

GENERATOR SET

● Genset Vibration Isolation	Std
○ IBC Seismic Certified/Seismic Rated Vibration Isolators	Opt
○ Extended warranty	Opt
○ Export boxing	Opt
○ Gen-Link Communications Software	Opt
○ Steel Enclosure	Opt
○ Aluminum Enclosure	Opt

ENGINE SYSTEM

General

● Oil Drain Extension	Std
○ Oil Make-Up System	Opt
○ Oil Heater	Opt

Fuel System

● Fuel lockoff solecnoid	Std
● Secondary fuel filter	Std
● Stainless steel flexible exhaust connection	Std
● Industrial Exhaust Silencer	Std
○ Critical Exhaust Silencer	Opt
○ Flexible fuel lines	Opt
○ Primary fuel filter	Opt
○ ULC/UL142 Fuel Tank	Opt

Cooling System

○ 120VAC Coolant Heater	Opt
○ 208VAC Coolant Heater	Opt
● 240VAC Coolant Heater	Std
○ Other Coolant Heater_____	-
● Closed Coolant Recovery System	Std
● UV/Ozone resistant hoses	Std
● Factory-Installed Radiator	Std
● Radiator Drain Extension	Std

Engine Electrical System

● Battery charging alternator	Std
● Battery cables	Std
● Battery tray	Std
○ Battery box	Opt
○ Battery heater	Opt
● Solenoid activated starter motor	Std
● Air cleaner	Std
● Fan guard	Std
● Radiator duct adapter	Std
○ 2A battery charger	Opt
○ 10A UL float/equalize battery charger	Opt
● Rubber-booted engine electrical connections	Std

ALTERNATOR SYSTEM

● UL2200 GENprotect™	Std
○ Main Line Circuit Breaker	Opt
○ 2nd Circuit Breaker	Opt
○ 3rd Circuit Breaker	Opt
○ Alternator Upsizing	Opt
○ Anti-Condensation Heater	Opt
○ Tropical coating	Opt

CONTROL SYSTEM

Control Panel

○ Digital H Control Panel - Dual 4x20 Display	na
● Digital G-100 Control Panel - Touchscreen	Std
○ Digital G-200 Paralleling Control Panel - Touchscreen	na
● Programmable Crank Limiter	Std
○ 21-Light Remote Annunciator	Opt
○ Remote Relay Panel (8 or 16)	Opt
● 7-Day Programmable Exerciser	Std
● Special Applications Programmable PLC	Std
● RS-232	Std
● RS-485	Std
● All-Phase Sensing DVR	Std
● Full System Status	Std
● Utility Monitoring (Req. H-Transfer Switch)	Std
● 2-Wire Start Compatible	Std
● Power Output (kW)	Std
● Power Factor	Std
● Reactive Power	Std
● All phase AC Voltage	Std
● All phase Currents	Std
● Oil Pressure	Std
● Coolant Temperature	Std
● Coolant Level	Std
○ Oil Temperature	Opt
● Fuel Pressure	Std
● Engine Speed	Std
● Battery Voltage	Std
● Frequency	Std
● Date/Time Fault History (Event Log)	Std
● UL2200 GENprotect™	Std
○ Low-Speed Exercise	-
● Isochronous Governor Control	Std
● -40deg C - 70deg C Operation	Std
● Waterproof Plug-In Connectors	Std
● Audible Alarms and Shutdowns	Std
● Not in Auto (Flashing Light)	Std
● On/Off/Manual Switch	Std
● E-Stop (Red Mushroom-Type)	Std
○ Remote E-Stop (Break Glass-Type, Surface Mount)	Opt
○ Remote E-Stop (Red Mushroom-Type, Surface Mount)	Opt
○ Remote E-Stop (Red Mushroom-Type, Flush Mount)	Opt
● NFPA 110 Level I and II (Programmable)	Std
● Remote Communication - RS232	Std
○ Remote Communication - Modem	Std
○ Remote Communication - Ethernet	-
○ 10A Run Relay	-

Alarms (Programmable Tolerances, Pre-Alarms and Shutdowns)

○ Low Fuel	Opt
● Oil Pressure (Pre-programmed Low Pressure Shutdown)	Std
● Coolant Temperature (Pre-programmed High Temp Shutdown)	Std
● Coolant Level (Pre-programmed Low Level Shutdown)	Std
● Oil Temperature	Std
● Fuel Pressure	Std
● Engine Speed (Pre-programmed Overspeed Shutdown)	Std
● Voltage (Pre-programmed Overvoltage Shutdown)	Std
● Battery Voltage	Std

Other Options

○ _____
○ _____
○ _____

GENERAC | INDUSTRIAL POWER

600 kW Diesel

SD600 dimensions, weights and sound levels

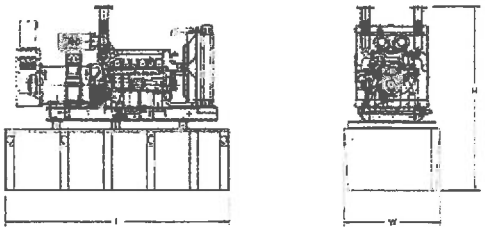

OPEN SET

RUN TIME HOURS	USABLE CAPACITY (GAL)	L	W	H	WT	dBA*
NO TANK	-	148	52.7	84.1	9902	91
6	265	151.6	63	101.2	11722	
9	396	151.6	63	107	11760	
12	550	151.6	63	112.6	12104	
17	793	185.2	63	116.3	12702	
21	960	185.2	63	123.5	12980	

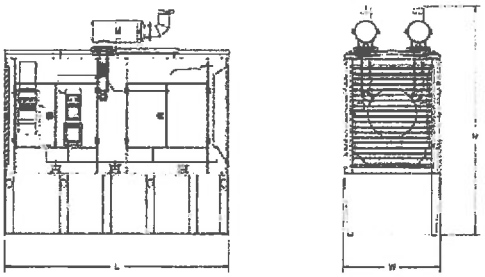

WEATHERPROOF ENCLOSURE

RUN TIME HOURS	USABLE CAPACITY (GAL)	L	W	H	WT	dBA*
NO TANK	-	165.4	70.9	121.4	12190	[illegible]
6	265	165.4	70.9	138.56	14010	
9	396	165.4	70.9	144.35	14048	
12	550	151.6	70.9	149.94	14392	
17	793	185.2	63	153.64	14990	
21	960	185.2	63	160.77	15268	

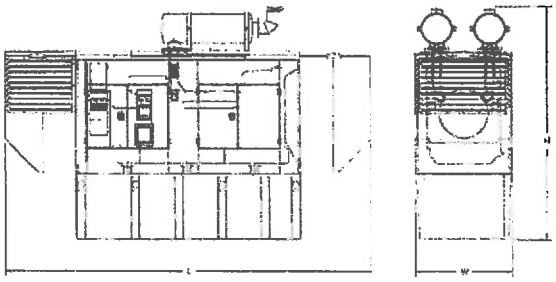

LEVEL 1 SOUND ENCLOSURE

RUN TIME HOURS	USABLE CAPACITY (GAL)	L	W	H	WT	dBA*
NO TANK	-	269.5	63	118	11993	[illegible]
7	313	269.5	63	134	13655	
10	469	269.5	63	139.25	13785	
15	685	269.5	63	146.54	14543	
20	936	269.5	63	147.1	14663	
29	1347	269.5	63	157.37	15763	

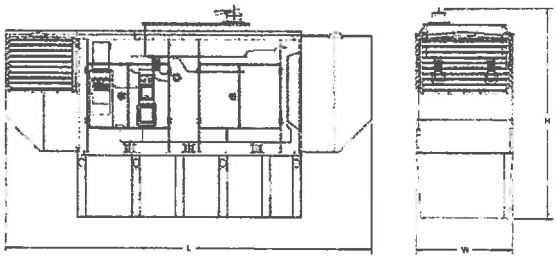

LEVEL 2 SOUND ENCLOSURE

RUN TIME HOURS	USABLE CAPACITY (GAL)	L	W	H	WT	dBA*
NO TANK	-	269.5	70.9	104.1	15263	75
7	313	269.5	70.9	120.1	16925	
10	469	269.5	70.9	125.35	17055	
15	685	269.5	70.9	132.64	17813	
20	936	269.5	70.9	133.16	17933	
29	1347	269.5	70.9	143.47	19033	

*All measurements are approximate and for estimation purposes only. Weights are without fuel in tank. Sound levels measured at 23ft (7m). Does not account for ambient site conditions.

Tank Options

○ MDEQ	OPT
○ Florida DERM/DEP	OPT
○ Chicago Fire Code	OPT
○ IFC Certification	CALL
○ ULC	CALL

Other Custom Options Available from your Generac Industrial Power Dealer

YOUR FACTORY RECOGNIZED GENERAC INDUSTRIAL DEALER

Specification characteristics may change without notice. Dimensions and weights are for preliminary purposes only. Please consult a Generac Power Systems Industrial Dealer for detailed installation drawings.

©2010 Generac Power Systems, Inc All rights reserved. All specifications are subject to change without notice. Bulletin 0184680SBY-D / Printed in U.S.A. 11/04/10

APPENDIX C: MATERIAL SAFETY DATA SHEETS (MSDS)

Only includes pages with composition and physical property data

THIS PAGE INTENTIONALLY LEFT BLANK FOR TWO-SIDED PRINTING

Material Safety Data Sheet

R-M® Diamont™
Automotive Refinish Products

Date of Preparation: January 1, 1997

Trade Name: DE17 Etching Primer

MSDS# 16

SECTION I

MANUFACTURER BASF Corporation Coatings & Colorants Division, 6125 Industrial Parkway, PO Box 2757, Whitehouse, Ohio 43571
EMERGENCY TELEPHONE NO 1-800-424-9300 (CHEMTREC) 1-800-832-HELP (BASF Hotline)
INFORMATION TELEPHONE NO 1-419-877-5308
D.O.T. DESIGNATION, HAZARD CLASS Paint, 3, UN1263

HMIS code 2* H 3 F 0 R
Production Code n/a

SECTION II — HAZARDOUS INGREDIENTS

Chemical Name	see footnote	CAS Registry No.	% W	OSHA - PEL TWA*	OSHA - PEL STEL*	ACGIH - TLV TWA*	ACGIH - TLV STEL*	CERCLA RQ (lbs)
n-Propanol		71-23-8	20-30	200	250	200(s)	250(s)	
n-Butanol (skin)	1	71-36-3	1-10	n/a	50 (c)	n/a	50 (c)	5,000
Isobutanol		78-83-1	1-10	50	n/a	50	n/a	5,000
Xylene	1,6	1330-20-7	5-15	100	150	100	150	100
Ethyl Benzene	1,6	100-41-4	1-5	100	125	100	125	1,000
Titanium Dioxide (Total Dust)		13463-67-7	5-15	10 mg/m3	n/a	10 mg/m3	n/a	
Zinc Oxide (Total Dust)	§ 1	1314-13-2	1-5	10 mg/m3	n/a	10 mg/m3	n/a	
Talc (non-fibrous), Respirable Fraction		14807-96-6	5-15	2 mg/m3	n/a	2 mg/m3	n/a	
Zinc Phosphate	1	7779-90-0	1-10	n/a	n/a	n/a	n/a	
n-Butyl Acetate		123-86-4	1-10	150	200	150	200	5,000
Formaldehyde	1,2a,3,4,5,6	50-00-0	<0.1	.75	2	n/a	0.3 (c)	100
Epoxy Resin		Proprietary	1-10	n/a	n/a	n/a	n/a	
Yellow Iron Oxide		51274-00-1	1-5	10 mg/m3	n/a	5 mg/m3	n/a	

§ • See Section X - Health Hazard Data

Although the 1989 OSHA Standard PEL's have been overturned by the 11th Circuit Court, they continue to be enforced by some states and are therefore listed on this document.
1 • Chemical subject to the reporting requirements of section 313 SARA (EPCRA) 2a • Warning This product contains a chemical known to the state of California to cause cancer 2b • Warning This product contains a chemical known to the state of California to cause birth defects or other reproductive harm 3, 4, 5 • Carcinogenic according to criteria established by: 3 = IARC 4 = NTP 5 = OSHA 6 • Chemical is listed as Hazardous Air Pollutant (HAP) in Title III of Clean Air Act Amendments of 1990

*ppm unless otherwise indicated (c = ceiling, s = skin)

SECTION III — PHYSICAL DATA

Boiling Point Range ° F	204-286	Weight per Gallon (lbs/gal)	9.36	Percent Volatile by Volume (%)	76
Vapor Pressure @ 68°F (mmHg)	11.29	VOC (lbs/gal) (gms/ltr)	5.2/625*	Percent Solid(s) by Weight (%)	44
Vapor Density (Air = 1)	>1	Evaporation Rate (Ether = 1)	<1	*VOC is Less Water and Exempt Solvent **VOC is Less Water, Acetone and Exempt Solvent	
Appearance and Odor	Grayish green with alcohol odor			Physical State	Liquid

SECTION IV — REACTIVITY DATA

Stability: Stable

Hazardous Polymerization: Will not occur

Hazardous Decomposition Products: Unknown other than CO_2 and possibly CO and carbon smoke

Incompatibility (materials to avoid): Strong acid, alkalies, and oxidizers

Conditions to Avoid: Heat, open flames, electrical and static discharge

Material Safety Data Sheet

R-M®
Automotive Refinish Products

Date of Preparation: January 1, 1997

Trade Name: **EP589 Gray Epoxy Primer**

MSDS# 42

SECTION I

MANUFACTURER **BASF Corporation** Coatings & Colorants Division, 6125 Industrial Parkway, PO Box 2757, Whitehouse, Ohio 43571
EMERGENCY TELEPHONE NO. **1-800-424-9300 (CHEMTREC) 1-800-832-HELP (BASF Hotline)**
INFORMATION TELEPHONE NO 1-419-877-5308
D.O.T. DESIGNATION, HAZARD CLASS Paint, 3, UN1263

HMIS code 3*H 3 F 0 R
Production Code n/a

SECTION II — HAZARDOUS INGREDIENTS

Chemical Name	see footnote	CAS Registry No.	% W	OSHA - PEL TWA*	OSHA - PEL STEL*	ACGIH - TLV TWA*	ACGIH - TLV STEL*	CERCLA RQ (lbs)
Butyl Benzyl Phthalate		85-68-7	1-10	n/a	n/a	n/a	n/a	100
Xylene	1,6	1330-20-7	10-20	100	150	100	150	100
Ethyl Benzene	1,6	100-41-4	1-5	100	125	100	125	1,000
Propylene Glycol Monomethyl Ether		107-98-2	15-25	100	150	100	150	
Zinc Chromate (as Cr)	1,2a,3,4,6	11103-86-9	1-10	n/a	1mg/m3-c	.01 mg/m3	n/a	
As Chromium Metal & Insoluble Salts		7440-47-3		1 mg/m3	n/a	.01 mg/m3	n/a	
(as Chromic Acid and Chromates)		7440-47-3		10 mg/m3	1mg/m3-c	5mg/m3	n/a	
Epoxy Resin		Proprietary	10-20	n/a	n/a	n/a	n/a	
Talc (non-fibrous), Respirable Fraction		14807-96-6	20-30	2 mg/m3	n/a	2 mg/m3	n/a	
Titanium Dioxide (Total Dust)		13463-67-7	5-15	10 mg/m3	n/a	10 mg/m3	n/a	
Iron Oxide Black (dust & fume - As Fe)		1317-61-9	1-5	10 mg/m3	n/a	5mg/m3	n/a	
Toluene	1,2b,6	108-88-3	<1	100	150	50(s)	n/a	1,000
Silica, Crystalline Quartz (Respirable Fraction)	2a,3,4	14808-60-7	<0.1	0.1 mg/m3	n/a	0.1 mg/m3	n/a	

Although the 1989 OSHA Standard PEL's have been overturned by the 11th Circuit Court, they continue to be enforced by some states and are therefore listed in this document.
1 • Chemical subject to the reporting requirements of section 313 SARA (EPCRA) 2a • Warning: This product contains a chemical known to the state of California to cause cancer 2b • Warning: This product contains a chemical known to the state of California to cause birth defects or other reproductive harm
3, 4, 5 • Carcinogenic according to criteria established by: 3 = IARC 4 = NTP 5 = OSHA 6 • Chemical is listed as Hazardous Air Pollutant (HAP) in Title III of Clean Air Act Amendments of 1990

*ppm unless otherwise indicated (c = ceiling, s = skin)

SECTION III — PHYSICAL DATA

Boiling Point Range °F	243-286	Weight per Gallon (lbs/gal)	11.46	Percent Volatile by Volume (%)	60
Vapor Pressure @ 68°F (mmHg)	8.65	VOC (lbs/gal) (gms/ltr)	4.5/534*	Percent Solid(s) by Weight (%)	61
Vapor Density (Air = 1)	>1	Evaporation Rate (Ether = 1)	<1	*VOC is Less Water and Exempt Solvent **VOC is Less Water, Acetone and Exempt Solvent	
Appearance and Odor: Grey, aromatic odor				Physical State: Liquid	

SECTION IV — REACTIVITY DATA

Stability: Stable

Hazardous Polymerization: Will not occur

Hazardous Decomposition Products: Unknown other than CO_2 and possibly CO and carbon smoke

Incompatibility (materials to avoid): Strong acid, alkalies, and oxidizers

Conditions to Avoid: Heat, open flames, electrical and static discharge

Material Safety Data Sheet

R-M®
Automotive Refinish Products

Date of Preparation: January 1, 1997

Trade Name: **PA897 Epoxy Activator**

MSDS# 51

SECTION I

MANUFACTURER **BASF Corporation** Coatings & Colorants Division, 6125 Industrial Parkway, PO Box 2757, Whitehouse, Ohio 43571
EMERGENCY TELEPHONE NO. **1-800-424-9300 (CHEMTREC) 1-800-832-HELP (BASF Hotline)**
INFORMATION TELEPHONE NO. 1-419-877-5308
D.O.T. DESIGNATION, HAZARD CLASS: Paint Related Material, 3, UN1263

HMIS code: 3* H 3 F 1 R
Production Code n/a

SECTION II — HAZARDOUS INGREDIENTS

Chemical Name	see footnote	CAS Registry No.	% W	OSHA - PEL TWA*	OSHA - PEL STEL*	ACGIH - TLV TWA*	ACGIH - TLV STEL*	CERCLA RQ (in lbs)
Xylene	1,6	1330-20-7	45-60	100	150	100	150	100
Ethyl Benzene	1,6	100-41-4	10-20	100	125	100	125	1,000
Polyamide Resin		Proprietary	30-40	n/a	n/a	n/a	n/a	

Although the 1989 OSHA Standard PEL's have been overturned by the 11th Circuit Court, they continue to be enforced by some states and are therefore liste this document
1 • Chemical subject to the reporting requirements of section 313 SARA (EPCRA) 2a • Warning: This product contains a chemical known to the state of California to cause cancer 2b • Warning: This product contains a chemical known to the state of California to cause birth defects or other reproductive harm 3, 4, 5 • Carcinogenic according to criteria established by 3 = IARC 4 = NTP 5 = OSHA 6 • Chemical is listed as Hazardous Air Pollutant (HAP) in Title III of Clean Air Act Amendments of 1990.

**ppm unless otherwise indicated (c = ceiling, s = skin*

SECTION III — PHYSICAL DATA

Boiling Point Range °F	282-286	Weight per Gallon (lbs/gal)	7.53	Percent Volatile by Volume (%)	6.
Vapor Pressure @ 68°F (mmHg)	6.0	VOC (lbs/gal) (gms/ltr)	4.9/582*	Percent Solid(s) by Weight (%)	3
Vapor Density (Air = 1)	>1	Evaporation Rate (Ether = 1)	<1	*VOC is Less Water and Exempt Solvent **VOC is Less Water, Acetone and Exempt Solvent	
Appearance and Odor: Clear, aromatic				Physical State: Liquid	

SECTION IV — REACTIVITY DATA

Stability: Stable

Hazardous Polymerization: Will not occur

Hazardous Decomposition Products: Unknown other than CO_2 and possibly CO and carbon smoke

Incompatibility (materials to avoid): Strong acid, alkalies, and oxidizers

Conditions to Avoid: Heat, open flames, electrical and static discharge

Material Safety Data Sheet

R-M®
Automotive Refinish Products

Date of Preparation January 1, 1997

Trade Name **DP20 Diamond Prime**

MSDS# 30

SECTION I

MANUFACTURER **BASF Corporation** Coatings & Colorants Division, 6125 Industrial Parkway, PO Box 2757, Whitehouse, Ohio 43571
EMERGENCY TELEPHONE NO. **1-800-424-9300 (CHEMTREC) 1-800-832-HELP (BASF Hotline)**
INFORMATION TELEPHONE NO. 1-419-877-5308
D.O.T. DESIGNATION, HAZARD CLASS Paint, 3, UN1263

HMIS code 2* H 3 F 0 R
Production Code n/a

SECTION II — HAZARDOUS INGREDIENTS

Chemical Name	see footnote	CAS Registry No.	% W	OSHA - PEL TWA*	OSHA - PEL STEL*	ACGIH - TLV TWA*	ACGIH - TLV STEL*	CERCLA RQ (lbs)
Propylene Glycol Methyl Ether Acetate		108-65-6	1-5	n/a	n/a	n/a	n/a	
Xylene	1,6	1330-20-7	10-15	100	150	100	150	100
Ethyl Benzene	1,6	100-41-4	1-5	100	125	100	125	1,000
n-Butyl Acetate		123-86-4	5-15	150	200	150	200	5,000
Titanium Dioxide (Total Dust)		13463-67-7	10-20	10 mg/m3	n/a	10 mg/m3	n/a	
Epoxy Resin		Proprietary	1-5	n/a	n/a	n/a	n/a	
Zinc Phosphate	1	7779-90-0	5-15	n/a	n/a	n/a	n/a	
Talc (non-fibrous), Respirable Fraction		14807-96-6	1-10	2 mg/m3	n/a	2 mg/m3	n/a	
Kaolin (Respirable Fraction)		1332-58-7	10-20	5 mg/m3	n/a	2 mg/m3	n/a	
Kaolin (Total Dust)		1332-58-7		10 mg/m3	n/a	n/a	n/a	
Barium Sulfate (Total Dust)	§	7727-43-7	5-15	10 mg/m3	n/a	10 mg/m3	n/a	
Silica, Crystalline Quartz (Respirable Fraction)	2a,3,4	14808-60-7	<0.1	0.1 mg/m3	n/a	0.1 mg/m3	n/a	

§ • See Section X - Health Hazard Data

Although the 1989 OSHA Standard PEL's have been overturned by the 11th Circuit Court, they continue to be enforced by some states and are therefore listed this document
1 • Chemical subject to the reporting requirements of section 313 SARA (EPCRA) 2a • Warning: This product contains a chemical known to the state of California to cause cancer. 2b • Warning: This product contains a chemical known to the state of California to cause birth defects or other reproductive harm 3, 4, 5 • Carcinogenic according to criteria established by: 3 = IARC 4 = NTP 5 = OSHA 6 • Chemical is listed as Hazardous Air Pollutant (HAP) in Title III of Clean Air Act Amendments of 1990

*ppm unless otherwise indicated (c = ceiling, s = skin)

SECTION III — PHYSICAL DATA

Boiling Point Range °F	167-338	Weight per Gallon (lbs/gal)	12.99	Percent Volatile by Volume (%)	52
Vapor Pressure @ 68°F (mmHg)	9.68	VOC (lbs/gal) (gms/ltr)	3.8/453*	Percent Solid(s) by Weight (%)	71
Vapor Density (Air = 1)	>1	Evaporation Rate (Ether = 1)	<1	*VOC is Less Water and Exempt Solvent **VOC is Less Water, Acetone and Exempt Solvent	
Appearance and Odor Gray, aromatic odor				Physical State Liquid	

SECTION IV — REACTIVITY DATA

Stability: Stable

Hazardous Polymerization: Will not occur

Hazardous Decomposition Products: Unknown other than CO_2 and possibly CO and carbon smoke

Incompatibility (materials to avoid). Strong acid, alkalies, and oxidizers

Conditions to Avoid: Heat, open flames, electrical and static discharge

BASF
The Chemical Company

Safety data sheet
DP26 PWR FILL 2K PR GRY W

1. Substance/preparation and company identification

Company
BASF CORPORATION
100 Campus Drive
Florham Park, NJ 07932

24 Hour Emergency Response Information
CHEMTREC: 1-800-424-9300
BASF HOTLINE 1-800-832-HELP

---

2. COMPOSITION/INFORMATION ON INGREDIENTS

Chemical name	CAS Number	Content (weight%)
n-butylacetate OSHA PEL 150 ppm 710 mg/m3 ACGIH STEL 200 ppm; TWA 150 ppm	123-86-4	10 - 20
kaolin OSHA PEL 5 mg/m3 R; PEL 15 mg/m3 T ACGIH TWA 2 mg/m3	1332-58-7	5 - 15
barium sulphate OSHA PEL 5 mg/m3 R; PEL 15 mg/m3 T ACGIH TWA 10 mg/m3	7727-43-7	5 - 15
talc ACGIH TWA 2 mg/m3	14807-96-6	1 - 10
xylene OSHA PEL 100 ppm 435 mg/m3 ACGIH STEL 150 ppm; TWA 100 ppm	1330-20-7	1 - 10
titanium dioxide OSHA PEL 15 mg/m3 T ACGIH TWA 10 mg/m3	13463-67-7	1 - 10
titanium dioxide (rutile) PEL/TLV not established	1317-80-2	1 - 10
solvent naphtha, light aromatic PEL/TLV not established	64742-95-6	1 - 10
ethyl 3-ethoxypropionate PEL/TLV not established	763-69-9	0 - 5
crystalline silica, quartz ACGIH TWA 0.025 mg/m3	14808-60-7	0 - 5
acetone OSHA PEL 1000 ppm 2400 mg/m3 ACGIH STEL 750 ppm; TWA 500 ppm	67-64-1	0 - 5
1-methoxy-2-propyl acetate PEL/TLV not established	108-65-6	0 - 5
methyl amyl ketone OSHA PEL 100 ppm 465 mg/m3 ACGIH TWA 50 ppm	110-43-0	0 - 5

Safety data sheet
DP26 PWR FILL 2K PR GRY W

1,2,4-trimethylbenzene	95-63-6	0 - 5
ACGIH TWA 25 ppm		
methyl acetate	79-20-9	0 - 5
OSHA PEL 200 ppm 610 mg/m3		
ACGIH STEL 250 ppm; TWA 200 ppm		
ethylbenzene	100-41-4	0 - 5
OSHA PEL 100 ppm 435 mg/m3		
ACGIH STEL 125 ppm; TWA 100 ppm		
silica, amorphous	7631-86-9	0 - 5
PEL/TLV not established		
triphosphoric acid, aluminum salt	13939-25-8	0 - 5
ACGIH TWA 1 mg/m3		
carbon black	1333-86-4	0 - 5
OSHA PEL 3.5 mg/m3		
ACGIH TWA 3.5 mg/m3		

R Respirable fraction
T Total dust

3. HAZARD IDENTIFICATION

HMIS III RATING
Health: 2H Flammability: 3 Physical hazard: 0

HMIS uses a numbering scale ranging from 0 to 4 to indicate the degree of hazard. A value of zero means that the substance possesses essentially no hazard; a rating of four indicates high hazard.

EMERGENCY OVERVIEW
WARNING
FLAMMABLE LIQUID
HARMFUL IF INHALED
CAN CAUSE CENTRAL NERVOUS SYSTEM DAMAGE
CAN CAUSE LIVER DAMAGE
CAN CAUSE KIDNEY DAMAGE
MAY CAUSE EYE, SKIN AND RESPIRATORY TRACT IRRITATION
CONTAINS MATERIAL THAT MAY CAUSE ALLERGIC RESPIRATORY REACTION
MAY CAUSE ALLERGIC OR ASTHMATIC SYMPTOMS OR BREATHING DIFFICULTIES IF INHALED.
CONTAINS MATERIAL WHICH MAY CAUSE CANCER.
MAY CAUSE PULMONARY EDEMA
CONTAINS MATERIAL WHICH MAY CAUSE DAMAGE TO THE BLOOD-FORMING ORGANS
INGESTION MAY CAUSE GASTRIC DISTURBANCES

POTENTIAL HEALTH EFFECTS

Primary routes of exposure:
Routes of entry for solids and liquids include eye and skin contact, ingestion and inhalation. Routes of entry for gases include inhalation and eye contact. Skin contact may be a route of entry for liquefied gases.
Solvents are absorbed through the skin.

Acute toxicity:
Inhalation may cause CNS depression, blurred vision, dizziness and

Safety data sheet
DP26 PWR FILL 2K PR GRY W

Eye protection:
Tightly fitting safety goggles (chemical goggles).
Wear face shield if splashing hazard exists.

Body protection:
Body protection must be chosen based on activity level and exposure.

General safety and hygiene measures:
Work place should be equipped with a shower and eye wash.
Contact lenses should not be worn.
Remove contaminated clothing.
Contaminated equipment or clothing should be cleaned after each use or disposed of.
Hands and/or face should be washed before breaks and at the end of the shift.

9. PHYSICAL AND CHEMICAL PROPERTIES

Form:	liquid
Odour:	Ketone-like
Colour:	grey
Boiling range:	131 - 5,432 °F [illegible]
Vapour pressure:	n.d.a.
Weight per gallon:	11.57 lb/gal. [illegible]
Vapour density:	heavier than air
Solids content:	approx. 59 % / 35.5936 VOL%
% volatiles:	approx. 40.8 % 64.4 VOL%

10. STABILITY AND REACTIVITY

Conditions to avoid:
Avoid all sources of ignition: heat, sparks or open flames.
Avoid electrostatic discharge.

Substances to avoid:
Strong bases
Strong oxidizing agents
Strong acids

Hazardous reactions:
This product is chemically stable.

Decomposition products:
Carbon monoxide
Carbon dioxide

11. TOXICOLOGICAL INFORMATION

No data available.

12. ECOLOGICAL INFORMATION

Material Safety Data Sheet

R-M® Diamont™ Automotive Refinish Products

Date of Preparation: January 1, 1997

Trade Name: BC Bases and Colors (Including D403)

MSDS# 1

SECTION I

MANUFACTURER BASF Corporation Coatings & Colorants Division, 6125 Industrial Parkway, PO Box 2757, Whitehouse, Ohio 43571
EMERGENCY TELEPHONE NO. 1-800-424-9300 (CHEMTREC) 1-800-832-HELP (BASF Hotline)
INFORMATION TELEPHONE NO. 1-419-877-5308
D.O.T. DESIGNATION, HAZARD CLASS Paint, 3, UN1263

HMIS code 2* H 3 F 0 R
Production Code N/A

SECTION II — HAZARDOUS INGREDIENTS

Chemical Name	see footnote	CAS Registry No.	% W	OSHA - PEL TWA*	OSHA - PEL STEL*	ACGIH - TLV TWA*	ACGIH - TLV STEL*	CERCLA RQ (in lbs)
n-Butyl Acetate		123-86-4	5-50	150	200	150	200	5,000
n-Butanol (skin)	1	71-36-3	0-5	n/a	50 (c)	n/a	50 (c)	5,000
Isopropanol		67-63-0	0-10	400	500	400	500	
Methyl Isobutyl Ketone	1,6	108-10-1	5-50	50	75	50	75	5,000
Cellulose Acetate Butyrate	¶	9004-36-8	1-10	n/a	n/a	n/a	n/a	
Xylene	1,6	1330-20-7	1-25	100	150	100	150	100
Ethyl Benzene	1	100-41-4	1-10	100	125	100	125	1,000
Toluene	1,2b,6	108-88-3	<1	100	150	50(s)	n/a	1,000
Silica, Amorphous Precipitated /Gel		112926-00-8	0-10	6 mg/m3	n/a	10 mg/m3	n/a	
Ethyl 3-Ethoxy Propionate		763-69-9	0-5	n/a	n/a	n/a	n/a	
Aromatic Hydrocarbons 100		64742-95-6	0-5	n/a	n/a	n/a	n/a	
Titanium Dioxide (Total Dust)		13463-67-7	0-25	10 mg/m3	n/a	10 mg/m3	n/a	
Mica, Silicate (Respirable Fraction)		12001-26-2	0-10	3 mg/m3	n/a	3 mg/m3	n/a	
Titanium Dioxide, Rutile	¶	1317-80-2	0-10	n/a	n/a	n/a	n/a	
Aliphatic Naphtha-2		64741-65-7	0-3	n/a	n/a	n/a	n/a	
Aromatic Hydrocarbons 150		64742-94-5	0-3	n/a	n/a	n/a	n/a	
Iron Oxide (dust & fume - As Fe)		1309-37-1	0-10	10 mg/m3	n/a	5mg/m3	n/a	
Stoddard Solvent		8052-41-3	0-3	100	n/a	100	n/a	
Propylene Glycol Methyl Ether Acetate		108-65-6	0-3	n/a	n/a	n/a	n/a	
Ethylene Glycol Butyl Ether Acetate	1,6	112-07-2	0-3	n/a	n/a	n/a	n/a	
Carbon Black	3	1333-86-4	0-3	3.5 mg/m3	n/a	3.5 mg/m3	n/a	
Graphite (Natural) (Respirable Dust)		7782-42-5	0-10	2.5mg/m3	n/a	2 mg/m3	n/a	
Copper Compounds (as Cu dust)			0-10	1 mg/m3	n/a	1 mg/m3	n/a	
Yellow Iron Oxide		51274-00-1	0-10	10 mg/m3	n/a	5 mg/m3	n/a	
Silica, Amorphous Fumed	¶	7631-86-9	0-3	n/a	n/a	n/a	n/a	
1,2,4 Trimethylbenzene	1	95-63-6	0-3	n/a	n/a	n/a	n/a	
Ethylene Glycol Propyl Ether	1,6	2807-30-9	0-3	n/a	n/a	n/a	n/a	
Aluminum Pigment (as Al - Total Metal Dust)	§ 1	7429-90-5	0-10	15 mg/m3	n/a	10 mg/m3	n/a	
Nickel Antimony Titanium Yellow Rutile	1,2a,3,4,6	8007-18-9	0-30	n/a	n/a	n/a	n/a	
Barium Sulfate (Total Dust)	§	7727-43-7	0-3	10 mg/m3	n/a	10 mg/m3	n/a	
Magnesium Fluoride (as F)		7783-40-6	0-5	2.5 mg/m3	n/a	2.5 mg/m3	n/a	
(as Antimony)		7440-36-0		0.5 mg/m3	n/a	0.5 mg/m3	n/a	
See page 4 for additional hazard information								

Although the 1989 OSHA Standard PEL's have been overturned by the 11th Circuit Court, they continue to be enforced by some states and are therefore list this document.
1 • Chemical subject to the reporting requirements of section 313 SARA (EPCRA) 2a • Warning: This product contains a chemical known to the state of California to cause cancer. 2b • Warning: This product contains a chemical known to the state of California to cause birth defects or other reproductive har 3, 4, 5 • Carcinogenic according to criteria established by: 3 = IARC 4 = NTP 5 = OSHA 6 • Chemical is listed as Hazardous Air Pollutant (HAP) in Title III of Clean Air Act Amendments of 1990.

*ppm unless otherwise indicated (c = ceiling, s = sk

SECTION III — PHYSICAL DATA

Boiling Point Range ° F	165-408	Weight per Gallon (lbs/gal)	7.44-9.47	Percent Volatile by Volume (%)	72-
Vapor Pressure @ 68°F (mmHg)	10.09-14.78	VOC (lbs/gal) (gms/ltr)	5.0-6.1/596-735*	Percent Solid(s) by Weight (%)	18-
Vapor Density (Air = 1)	>1	Evaporation Rate (Ether = 1)	<1	*VOC is Less Water and Exempt Solvent **VOC is Less Water, Acetone and Exempt Solve	
Appearance and Odor	Various colors, aromatic, ester odor			Physical State	Liquid

SECTION IV — REACTIVITY DATA

Stability: Stable

Hazardous Polymerization: Will not occur

Hazardous Decomposition Products: Unknown other than CO2 and possibly CO and carbon smoke.

Incompatibility (materials to avoid): Strong acid, alkalies, and oxidizers.

Conditions to Avoid: Heat, open flames, electrical and static discharge

Regulatory Information Addendum

Diamont™ BC Bases

MSDS# 1
January 1, 1997

These materials are reportable under section 313 of SARA (EPCRA):

BC100
Methyl Isobutyl Ketone 19%; Xylene 14%; Ethyl Benzene 3%

BC101
Methyl Isobutyl Ketone 8%; Xylene 18%; Ethyl Benzene 4%

BC105
Methyl Isobutyl Ketone 14%; Xylene 18%; Ethyl Benzene 4%

BC106
Methyl Isobutyl Ketone 13%; Xylene 11%; Ethyl Benzene 2%; n-Butanol 1%

BC110
Methyl Isobutyl Ketone 17%; Xylene 11%; Ethyl Benzene 2%; n-Butanol 1%

BC114
Methyl Isobutyl Ketone 15%; Xylene 9%; Ethyl Benzene 2%; N-Butanol 2%

BC115
Methyl Isobutyl Ketone 18%; Xylene 11%; Ethyl Benzene 2%; N-Butanol 1%

BC116
Methyl Isobutyl Ketone 18%; Xylene 11%; Ethyl Benzene 2%; N-Butanol 1%

BC117
Methyl Isobutyl Ketone 14%; Xylene 9%; Ethyl Benzene 2%; N-Butanol 2%

BC118
Methyl Isobutyl Ketone 17%; Xylene 11%; Ethyl Benzene 2%; N-Butanol 1%

BC120
Methyl Isobutyl Ketone 15%; Xylene 13%; Ethyl Benzene 3%; Aluminum (fume or dust) 3%

BC140
Methyl Isobutyl Ketone 15%; Xylene 13%; Ethyl Benzene 3%; Aluminum (fume or dust) 4%

BC145
Methyl Isobutyl Ketone 15%; Xylene 14%; Ethyl Benzene 3%; Aluminum (fume or dust) 4%

BC151
Methyl Isobutyl Ketone 19%; Xylene 14%; Ethyl Benzene 3%; Aluminum (fume or dust) 6%

BC170
Methyl Isobutyl Ketone 18%; Xylene 14%; Ethyl Benzene 3%; Aluminum (fume or dust) 5%

BC171
Methyl Isobutyl Ketone 19%; Xylene 12%; Ethyl Benzene 3%; Aluminum (fume or dust) 5%

BC180
Methyl Isobutyl Ketone 14%; Xylene 13%; Ethyl Benzene 3%; Aluminum (fume or dust) 9%

BC190
Methyl Isobutyl Ketone 7%; Xylene 15%; Ethyl Benzene 3%; N-Butanol 2%; Glycol Ethers 1%

BC195
Methyl Isobutyl Ketone 14%; Xylene 13%; Ethyl Benzene 3%

BC200
Methyl Isobutyl Ketone 20%; Xylene 18%; Ethyl Benzene 4%; n-Butanol 1%; Glucol Ethers 1%

BC209
Methyl Isobutyl Ketone 14%; Xylene 18%; Ethyl Benzene 4%

BC250
Methyl Isobutyl Ketone 14%; Xylene 19%; Ethyl Benzene 4%

BC260
Methyl Isobutyl Ketone 10%; Xylene 22%; Ethyl Benzene 4%

BC300
Methyl Isobutyl Ketone 17%; Xylene 16%; Ethyl Benzene 3%

BC400
Methyl Isobutyl Ketone 18%; Xylene 16%; Ethyl Benzene 3

BC402
Methyl Isobutyl Ketone 20%; Xylene 14%; Ethyl Benzene 3%

BC405
Methyl Isobutyl Ketone 18%; Xylene 14%; Ethyl Benzene 3%

BC410
Methyl Isobutyl Ketone 18%; Xylene 16%; Ethyl Benzene 3%

BC470
Methyl Isobutyl Ketone 16%; Xylene 16%; Ethyl Benzene 3%

BC500
Methyl Isobutyl Ketone 17%; Xylene 17%; Ethyl Benzene 3%

BC505
Methyl Isobutyl Ketone 18%; Xylene 17%; Ethyl Benzene 3%; Glycol Ethers 2%

BC510
Methyl Isobutyl Ketone 12%; Xylene 17%; Ethyl Benzene 4%

BC600
Methyl Isobutyl Ketone 25%; Xylene 16%; Ethyl Benzene 3%

BC605
Methyl Isobutyl Ketone 14%; Xylene 16%; Ethyl Benzene 3%

BC610
Methyl Isobutyl Ketone 42%; Xylene 15%; Ethyl Benzene 3%

Diamont™ BC Bases Continued:

MSDS# 1
January 1, 1997

BC621
Methyl Isobutyl Ketone 15%; Xylene 16%; Ethyl Benzene 3%

BC650
Methyl Isobutyl Ketone 9%; Xylene 11%; Ethyl Benzene 2%; Antimony Compounds 25%; Nickel Compounds 25%

BC655
Methyl Isobutyl Ketone 10%; Xylene 15%;Ethyl Benzene 3%

BC670
Methyl Isobutyl Ketone 10%; Xylene 6%; Ethyl Benzene 1%

BC710
Methyl Isobutyl Ketone 10%; Xylene 6%; Ethyl Benzene 1%

BC800
Methyl Isobutyl Ketone 20%; Xylene 14%; Ethyl Benzene 3%

BC805
Methyl Isobutyl Ketone 13%; Xylene 18%; Ethyl Benzene 4%

BC810
Methyl Isobutyl Ketone 10%; Xylene 17%; Ethyl Benzene 4%, 1,2,4-Trimethylbenzene 1%

BC815
Methyl Isobutyl Ketone 10%; Xylene 16%; Ethyl Benzene 3%

BC821
Methyl Isobutyl Ketone 13%; Xylene 14%; Ethyl Benzene 3%

BC825
Methyl Isobutyl Ketone 14%; Xylene 13%; Ethyl Benzene 3%

BC830
Methyl Isobutyl Ketone 10%; Xylene 15%; Ethyl Benzene 3%

BC833
Methyl Isobutyl Ketone 16%; Xylene 14%; Ethyl Benzene 3%

BC838
Methyl Isobutyl Ketone 17%; Xylene 12%; Ethyl Benzene 3%

BC840
Methyl Isobutyl Ketone 16%; Xylene 13%; Ethyl Benzene 3%

BC850
Methyl Isobutyl Ketone 10%; Xylene 15%; Ethyl Benzene 3%

BC880
Methyl Isobutyl Ketone 16%; Xylene 14%; Ethyl Benzene 3%

BC959
Methyl Isobutyl Ketone 13%; Xylene 9%; Ethyl Benzene 2%; N-Butanol 2%

D403
Methyl Isobutyl Ketone 5%; Xylene 34%; Ethyl Benzene 7%

This Regulatory Addendum must remain attached to all Material Safety Data Sheets that are copied and distributed for the above-mentioned materials.

BASF
The Chemical Company

Safety data sheet
DC5600 CTR Production Clear

1. Substance/preparation and company identification

Company
BASF Corporation
100 Campus Drive
Florham Park, NJ 07932

24 Hour Emergency Response Information
CHEMTREC: (800) 424-9300
BASF HOTLINE: (800) 832-HELP

2. COMPOSITION/INFORMATION ON INGREDIENTS

Chemical name	CAS Number	Content (weight%)
methyl amyl ketone OSHA PEL 100 ppm 465 mg/m3 ACGIH TWA 50 ppm	110-43-0	20 - 30
acetone OSHA PEL 1000 ppm 2400 mg/m3 ACGIH STEL 750 ppm; TWA 500 ppm	67-64-1	10 - 20
methyl propyl ketone OSHA PEL 200 ppm 700 mg/m3 ACGIH STEL 250 ppm; TWA 200 ppm	107-87-9	1 - 10
methyl acetate OSHA PEL 200 ppm 610 mg/m3 ACGIH STEL 250 ppm; TWA 200 ppm	79-20-9	1 - 10
xylene OSHA PEL 100 ppm 435 mg/m3 ACGIH STEL 150 ppm; TWA 100 ppm	1330-20-7	0 - 5
butyl benzyl phthalate (plasticizer) PEL/TLV not established	85-68-7	0 - 5
ethyl 3-ethoxypropionate PEL/TLV not established	763-69-9	0 - 5
substituted benzotriazole PEL/TLV not established	proprietary	0 - 5
methyl isobutyl ketone OSHA PEL 100 ppm 410 mg/m3 ACGIH STEL 75 ppm; TWA 50 ppm	108-10-1	0 - 5
ethylbenzene OSHA PEL 100 ppm 435 mg/m3 ACGIH STEL 125 ppm; TWA 100 ppm	100-41-4	0 - 5

3. HAZARD IDENTIFICATION

HMIS III RATING
Health: 2* Flammability: 3 Physical hazard: 0

BASF
The Chemical Company

Safety data sheet
DC5600 CTR Production Clear

Vapour density: heavier than air
Solids content: approx. 46 %
% volatiles: approx. 63.0 VOL%
Total VOC: 512 g/L / 4.3 lb/gal
VOC (minus water and exempt solvents): 441 g/L / 3.7 lb/gal
Weight of VOC (per volume of material): 355 g/L / 3.0 lb/gal

---

10. STABILITY AND REACTIVITY

Conditions to avoid:
Avoid all sources of ignition: heat, sparks or open flames.
Avoid electrostatic discharge.

Substances to avoid:
Strong bases
Strong oxidizing agents
Strong acids

Hazardous reactions:
This product is chemically stable.

Decomposition products:
Carbon monoxide
Carbon dioxide

---

11. TOXICOLOGICAL INFORMATION

No data available.

---

12. ECOLOGICAL INFORMATION

No data available.

---

13. DISPOSAL CONSIDERATIONS

Waste disposal of substances:
Dispose of in accordance with national, state and local regulations.
The use and processing of this product, or addition of other constituents, may cause it to be considered a hazardous waste.
It is the waste generators responsibility to determine if a particular waste is hazardous under RCRA.
Do not discharge into drains/surface waters/groundwater.
Incinerate or dispose of in a RCRA licensed facility.
Do not incinerate closed containers.

BASF
The Chemical Company

Safety data sheet
DC5300 CTR BAKING CLR

Revision date 2010/09/15
Version 1.2

1. Substance/preparation and company identification

Company
BASF CORPORATION
100 Campus Drive
Florham Park, NJ 07932, USA

24 Hour Emergency Response Information
CHEMTREC: 1-800-424-9300
BASF HOTLINE 1-800-832-HELP

2. COMPOSITION/INFORMATION ON INGREDIENTS

Chemical name	CAS Number	Content (weight%)
methyl isoamyl ketone OSHA PEL 100 ppm 475 mg/m3 ACGIH TWA 50 ppm	[illegible]	5 - 15
ethyl 3-ethoxypropionate PEL/TLV not established	763-69-9	1 - 10
solvent naphtha, light aromatic PEL/TLV not established	64742-95-6	1 - 10
n-butylacetate OSHA PEL 150 ppm 710 mg/m3 ACGIH STEL 200 ppm; TWA 150 ppm	123-86-4	1 - 10
1,3,5-trimethylbenzene ACGIH TWA 25 ppm	95-63-6	1 - 10
petroleum naphtha, heavy hydrotreated PEL/TLV not established	64742-48-9	1 - 10
acetone OSHA PEL 1000 ppm 2400 mg/m3 ACGIH STEL 750 ppm; TWA 500 ppm	67-64-1	0 - 5
solvent naphtha, heavy aromatic PEL/TLV not established	64742-94-5	0 - 5
mesitylene ACGIH TWA 25 ppm	108-67-8	0 - 5
substituted benzotriazole PEL/TLV not established	127519-17-9	0 - 5
naphthalene OSHA PEL 10 ppm 50 mg/m3 ACGIH STEL 15 ppm; TWA 10 ppm	91-20-3	0 - 5

3. HAZARD IDENTIFICATION

HMIS III RATING
Health: 2* Flammability: 3 Physical hazard: 0

Safety data sheet
DC5300 CTR BAKING CLR

Work place should be equipped with a shower and eye wash.
Contact lenses should not be worn.
Remove contaminated clothing.
Contaminated equipment or clothing should be cleaned after each use or disposed of.
Hands and/or face should be washed before breaks and at the end of the shift.

9. PHYSICAL AND CHEMICAL PROPERTIES

Form:	liquid
Odour:	solvent-like
Colour:	clear
Boiling range:	133 - 363 °F 56.1 - 183.9 °C
Vapour pressure:	n.d.a.
Weight per gallon:	8.21 lb/gal CALC
Vapour density:	heavier than air
Solids content:	approx. 56.5 % 50.2912 VOL%
% volatiles:	approx. 43.5 % 49.7 VOL%

10. STABILITY AND REACTIVITY

Conditions to avoid:
Avoid all sources of ignition: heat, sparks or open flames.
Avoid electrostatic discharge.

Substances to avoid:
Strong bases
Strong oxidizing agents
Strong acids

Hazardous reactions:
This product is chemically stable.

Decomposition products:
Carbon monoxide
Carbon dioxide

11. TOXICOLOGICAL INFORMATION

No data available.

12. ECOLOGICAL INFORMATION

No data available.

13. DISPOSAL CONSIDERATIONS

Waste disposal of substances:
Dispose of in accordance with national, state and local regulations.
The use and processing of this product, or addition of other constituents, may cause it to be considered a hazardous waste.
It is the waste generators responsibility to determine if a

MATERIAL SAFETY DATA SHEET
COATINGS AND RESINS GROUP
PPG Industries, Inc.

SECTION 1 - CHEMICAL, PRODUCT, AND COMPANY INFORMATION

PRODUCT CODE/IDENTITY:	DPX171
REVISION DATE:	01/28/00 (000) 0808
CUSTOMER PART #/NAME:	
PRODUCT TRADE NAME:	SELF ETCHING PRIMER
CHEMICAL FAMILY:	Vinyl
EMERGENCY MEDICAL/SPILL INFO	(304) 843-1300 (U.S.) 91-800-00-214 (MEXICO)
TECHNICAL INFORMATION:	(440) 572-2800
PRODUCT SAFETY/MSDS INFORMATION:	4325 ROSANNA DRIVE, P.O. BOX 9 ALLISON PARK, PA 15101 (412) 492-5555
DATE OF MSDS PREPARATION:	08/01/00

PRIMARY HAZARD WARNING

Flammable. Keep away from heat, sparks, flames, and other sources of ignition. Do not smoke. Extinguish all flames and pilot lights. Turn off stoves, heaters, electrical motors, and other sources of ignition during use and until all vapors/odors are gone. Harmful if swallowed. Dried film of this product may be harmful if chewed or swallowed. May cause moderate skin irritation. Causes severe eye irritation. Prolonged or repeated contact may cause an allergic skin reaction. Vapor and/or spray mist may be harmful if inhaled. Vapor irritates eyes, nose, and throat. Sanding and grinding dusts may be harmful if inhaled.

THIS MATERIAL SAFETY DATA SHEET HAS BEEN PREPARED IN ACCORDANCE WITH THE OSHA HAZARD COMMUNICATION STANDARD (29 CFR 1910.1200), THE SUPPLIER NOTIFICATION REQUIREMENTS OF SARA TITLE III, SECTION 313, AND OTHER APPLICABLE RIGHT-TO-KNOW REGULATIONS.

SECTION 2 - COMPOSITION/INFORMATION ON INGREDIENTS

REF	HAZARDOUS INGREDIENTS	PERCENT	CAS NUMBER	CARCINOGEN*
01	TOLUENE	10 - <20	108 88 3	
02	CARBON BLACK	0.1 - <1	1333 86-4	
03	TITANIUM DIOXIDE	5 - <10	13463 67 7	
04	ETHYL ACETATE	1 - <5	141 78-6	
05	TALC	5 - <10	14807 96 6	
06	BPA POLYMER REACTED WITH BPA	1 - <5	25035 25-1	
07	ETHYL ALCOHOL	10 - <20	64-17 5	
08	ISOPROPYL ALCOHOL	5 - <10	67 63 0	
09	N-BUTYL ALCOHOL	10 - <20	71 36 3	

* Carcinogens: O = OSHA; A = ACGIH; N = NTP, I = IARC

SARA TITLE III & CERCLA CLASSIFICATIONS

REF	SARA 302 RQ (LBS)	SARA 302 TPQ (LBS)	SARA 313	SARA 311/312 AC	CH	FI	PR	RE
01	1000	NOT ESTAB	Y	Y	N	Y	N	N
02	NOT ESTAB	NOT ESTAB	N	N	Y	N	N	N
03	NOT ESTAB	NOT ESTAB	N	N	N	N	N	N
04	5000	NOT ESTAB	N	Y	N	Y	N	N
05	NOT ESTAB	NOT ESTAB	N	N	N	N	N	N
06	NOT ESTAB	NOT ESTAB	N	Y	N	N	N	N
07	NOT ESTAB	NOT ESTAB	N	Y	N	Y	N	N
08	NOT ESTAB	NOT ESTAB	N	Y	N	Y	N	N
09	5000	NOT ESTAB	Y	Y	N	Y	N	N

SARA 311/312 CATEGORIES FOR THIS PRODUCT: ACUTE = Y, CHRONIC = Y
FLAMMABILITY = Y, PRESSURE = N, REACTIVITY = N

OCCUPATIONAL EXPOSURE LIMITS HAVE BEEN ESTABLISHED FOR THE FOLLOWING MATERIALS:

REF	ACGIH TLV-TWA	ACGIH TLV-STEL	U.S. OSHA PEL-TWA	U.S. OSHA PEL-STEL
01	S 50 ppm	NOT ESTAB	100 ppm	150 ppm
02	3.5 mg/m3	NOT ESTAB	3.5 mg/m3	NOT ESTAB
03	10 mg/m3	NOT ESTAB	10 mg/m3	NOT ESTAB
04	400 ppm	NOT ESTAB	400 ppm	NOT ESTAB
05	R- 2 mg/m3	NOT ESTAB	R- 2 mg/m3	NOT ESTAB
06	NOT ESTAB	NOT ESTAB	NOT ESTAB	NOT ESTAB
07	1000 ppm	NOT ESTAB	1000 ppm	NOT ESTAB
08	400 ppm	500 ppm	400 ppm	500 ppm
09	C,S-50 ppm	NOT ESTAB	C,S 50 ppm	NOT ESTAB

(C- Ceiling Limit; S- Potential Skin Absorption; R- Respirable Dust) (NOT ESTAB. = NOT ESTABLISHED = NOT APPLICABLE)

PRODUCT STATUS RELATIVE TO THE U.S. EPA TOXIC SUBSTANCES CONTROL ACT

All chemical substances in this product are listed on the U.S. TSCA Inventory or are otherwise exempt from TSCA Inventory reporting requirements.

SECTION 3 - HAZARDS IDENTIFICATION

EFFECTS OF OVEREXPOSURE FROM:

- **INGESTION:** Harmful if swallowed. Dried film of this product may be harmful if chewed or swallowed.
- **EYE CONTACT:** Causes severe eye irritation.
- **SKIN CONTACT:** May cause moderate skin irritation. Prolonged or repeated contact may cause an allergic skin reaction.
- **INHALATION:** Vapor and/or spray mist may be harmful if inhaled. Vapor irritates eyes, nose, and throat. Sanding and grinding dusts may be harmful if inhaled. Repeated exposure to high vapor concentrations may cause irritation of the respiratory system and permanent brain and nervous system damage.
- **CHRONIC OVEREXPOSURE:** Avoid long-term and repeated contact. Possible mutagenic hazard. Predictive laboratory tests with cultured media on an ingredient(s) contained in this product indicate potential damage to genetic material. This product either contains formaldehyde or is capable of releasing formaldehyde above 0.5 ppm under certain conditions. Formaldehyde is a potential cancer hazard, a skin sensitizer and a respiratory sensitizer. This product contains titanium dioxide. Animals inhaling massive quantities of titanium dioxide dust in a long-term study developed lung tumors. Studies with humans involved in manufacture of this pigment indicate no increased risk of cancer from exposure. Potential for inhalation of titanium dioxide dusts from coatings is very limited. Since overexposures are not expected, there is no significant hazard for man. This product contains toluene. Toluene inhalation in animals (greater than 1500 ppm) and intentional inhalation of toluene-containing products by humans (e.g. glue) has caused adverse fetal development effects. This product contains talc. In a lifetime inhalation study female rats exposed to an elevated respirable concentration (9 times the Permissible Exposure Limit) of cosmetic grade talc developed lung cancer. To date, no U.S. regulatory agency has classified talc as a carcinogen based on this data. This product contains carbon black which has been rated an IARC 2B carcinogen due to animal data.

SIGNS AND SYMPTOMS OF OVEREXPOSURE: Dried film of this product may be harmful if chewed or swallowed. Eye watering, headaches, nausea, dizziness, and loss of coordination are indications that solvent levels are too high. Intentional misuse by deliberately concentrating and inhaling the contents can be harmful or fatal. Redness, itching, burning sensation and visual disturbances may indicate excessive eye contact. Dryness, itching, cracking, burning, redness, and swelling are conditions associated with excessive skin contact.

MEDICAL CONDITIONS AGGRAVATED BY EXPOSURE: Not applicable.

WARNING: This product contains a chemical known to the State of California to cause birth defects or other reproductive harm.

SECTION 4 - FIRST AID MEASURES

- **INGESTION:** If swallowed, do not induce vomiting. Gently wipe out inside mouth to remove any residual material.
- **EYE CONTACT:** In case of eye contact, remove contact lenses and flush eyes immediately with a gentle stream of luke warm water for at least 15 minutes.
- **SKIN CONTACT:** In case of skin contact, flush immediately with plenty of water for at least 15 minutes followed by washing with soap and water.
- **INHALATION:** If affected by inhalation of vapor or spray mist, remove to fresh air. Apply artificial respiration and other support measures as required.
- **OTHER:** If ingestion, any type of overexposure or symptoms of overexposure occur during or following the use of this product, contact a poison control center, emergency room or physician immediately; have Material Safety Data Sheet information available.

SECTION 5 - FIRE FIGHTING MEASURES

- **FLASHPOINT:** 42 Degrees F (6 Degrees C) (PENSKY MARTENS CLOSED CUP)
- **FLAMMABLE LIMITS: Lower explosion limit (LEL):** 2.3
- **Upper explosion limit (UEL):** Not available
- **EXTINGUISHING MEDIA:** Use National Fire Protection Association (NFPA) Class B extinguishers (carbon dioxide, dry chemical, or universal aqueous film forming foam)

designed to extinguish NFPA Class IB flammable liquid fires

▸UNUSUAL FIRE AND EXPLOSION HAZARDS: Keep this product away from heat, sparks, flame, and other sources of ignition (i.e., pilot lights, electric motors, static electricity) Invisible vapors can travel to a source of ignition and flash back. Do not smoke while using this product. Keep containers tightly closed when not in use. Closed containers may explode when overheated. Do not apply to hot surfaces. Toxic gases may form when this product comes in contact with extreme heat.

▸SPECIAL FIRE FIGHTING PROCEDURES: Water spray may be ineffective. Water spray may be used to cool closed containers to prevent pressure build-up and possible autoignition or explosion when exposed to extreme heat. If water is used, fog nozzles are preferable. Fire-fighters should wear self-contained breathing apparatus and full protective clothing.

SECTION 6 - ACCIDENTAL RELEASE MEASURES

▸STEPS TO BE TAKEN IN CASE MATERIAL IS RELEASED OR SPILLED: Provide maximum ventilation. Only personnel equipped with proper respiratory, skin, and eye protection should be permitted in the area. Remove all sources of ignition. Take up spilled material with sand, vermiculite, or other noncombustible absorbent material and place in clean, empty containers for disposal. Only the spilled material and the absorbant should be placed in this container.

▸WASTE DISPOSAL METHOD: Waste material must be disposed of in accordance with federal, state, provincial, and local environmental control regulations. Empty containers should be recycled or disposed of through an approved waste management facility.

SECTION 7 - HANDLING AND STORAGE

▸HANDLING AND STORAGE PRECAUTIONS: Do not store above 120 degrees F (48 degrees C.). Store large quantities in buildings designed and protected for storage of NFPA Class IB flammable liquids.

▸OTHER PRECAUTIONS: Vapors may collect in low areas. If this material is part of a multiple component system, read the Material Safety Data Sheet(s) for the other component or components before blending as the resulting mixture may have the hazards of all of its parts. Containers should be grounded when pouring. Avoid free fall of liquids in excess of a few inches.

SECTION 8 - EXPOSURE CONTROLS AND PERSONAL PROTECTION

PERSONAL PROTECTIVE EQUIPMENT FOR:

▸EYE PROTECTION: Wear chemical type splash goggles when possibility exists for eye contact due to splashing or spraying liquid, airborne particles, or vapors.

▸SKIN PROTECTION: Wear protective clothing to prevent skin contact. Apron and gloves should be constructed of; butyl rubber. No specific permeation/degradation testing have been done on protective clothing for this product. Recommendations for skin protection are based on infrequent contact with this product. For frequent contact or total immersion, contact a manufacturer of protective clothing for appropriate chemical impervious equipment.

▸RESPIRATORY PROTECTION: Overexposure to vapors may be prevented by ensuring proper ventilation controls, vapor exhaust or fresh air entry. A NIOSH- approved air purifying respirator with the appropriate chemical cartridges or a positive-pressure, air-supplied respirator may also reduce exposure. Read the respirator manufacturer's instructions and literature carefully to determine the type of airborne contaminants against which the respirator is effective, its limitations, and how it is to be properly fitted and used.

▸OTHER EQUIPMENT: Clean contaminated clothing and shoes.

VENTILATION REQUIREMENTS: Provide general dilution or local exhaust ventilation in volume and pattern to keep the concentration of ingredients listed in Section 2 below the lowest suggested exposure limits, the LEL below the stated limit, and to remove decomposition products during welding or flame cutting.

SECTION 9 - PHYSICAL AND CHEMICAL PROPERTIES

[FORMULA VALUES, NOT SALES SPECIFICATIONS]

BOILING RANGE: 149- 388Degrees F
VAPOR PRESSURE: 33.6 mmHg
VAPOR DENSITY: Heavier than air
% VOLATILE/VOLUME: 77 870
SPECIFIC GRAVITY: 1 104
SOLUBILITY IN WATER: 27.4 %
WEIGHT/GALLON (LBS): 9.20 (U.S.)
pH: Not applicable
% SOLIDS BY WEIGHT: 41.86
EVAPORATION RATE(BuOAc = 100): 208
ODOR/APPEARANCE: Viscous liquid with an odor characteristic of the solvents listed in Section 2

SECTION 10 - STABILITY AND REACTIVITY

▸This product is normally stable and will not undergo hazardous reactions.

▸INCOMPATIBILITY (MATERIALS AND CONDITIONS TO AVOID): Avoid contact with strong alkalies, strong mineral acids, or strong oxidizing agents.

▸HAZARDOUS DECOMPOSITION PRODUCTS: May produce the following hazardous decomposition products when exposed to extreme heat: carbon monoxide ; carbon dioxide ; lower molecular weight polymer fractions; oxides of phosphorus ; oxides of zinc . Extreme heat includes, but is not limited to, flame cutting, brazing, and welding.

Hazardous Materials Identification System (HMIS) and National Fire Protection Association (NFPA) Ratings

HMIS Rating		NFPA Rating	
HEALTH	2*	HEALTH	2
FLAMMABILITY	3	FLAMMABILITY	3
REACTIVITY	0	INSTABILITY	0

Rating System 0 = Minimal, 1 = Slight, 2 = Moderate, 3 = Serious, 4 = Severe, * = Chronic Effects

Safe handling of this product requires that all of the information on the MSDS be evaluated for specific work environments and conditions of use.

THIS IS THE END OF THE MSDS FOR: DPX171 (00179215.001DPX171 08/01/00)

MATERIAL SAFETY DATA SHEET
COATINGS AND RESINS GROUP
PPG Industries, Inc.

SECTION 1 - CHEMICAL, PRODUCT, AND COMPANY INFORMATION

PRODUCT CODE/IDENTITY:	DPX172
REVISION DATE:	01/05/99 (000) 0809
CUSTOMER PART #/NAME:	
PRODUCT TRADE NAME:	SELF ETCH PRIMER CATALYST
CHEMICAL FAMILY:	CATALYST
EMERGENCY MEDICAL/SPILL INFO	(304) 843-1300 (U.S.) 91 800-00-214 (MEXICO)
TECHNICAL INFORMATION:	(440) 572 2800
PRODUCT SAFETY/MSDS INFORMATION:	4325 ROSANNA DRIVE, P.O. BOX 9 ALLISON PARK, PA 15101 (412) 492-5555
DATE OF MSDS PREPARATION:	08/01/00

PRIMARY HAZARD WARNING

Flammable. Keep away from heat, sparks, flames, and other sources of ignition. Do not smoke. Extinguish all flames and pilot lights. Turn off stoves, heaters, electrical motors, and other sources of ignition during use and until all vapors/odors are gone. May be fatal or cause blindness if swallowed. May be corrosive. This product contains a material which causes skin burns. This product contains a material which causes irreversible eye damage. May be absorbed through the skin. Vapor and/or spray mist may be harmful if inhaled. Vapor irritates eyes, nose, and throat.

THIS MATERIAL SAFETY DATA SHEET HAS BEEN PREPARED IN ACCORDANCE WITH THE OSHA HAZARD COMMUNICATION STANDARD (29 CFR 1910.1200). THE SUPPLIER NOTIFICATION REQUIREMENTS OF SARA TITLE III, SECTION 313, AND OTHER APPLICABLE RIGHT-TO-KNOW REGULATIONS.

SECTION 2 - COMPOSITION/INFORMATION ON INGREDIENTS

REF	HAZARDOUS INGREDIENTS	PERCENT	CAS NUMBER	CARCINOGEN*
01	METHYL ISOBUTYL KETONE	20 - <30	108-10-1	
02	TOLUENE	20 - <30	108-88-3	
03	ETHYL ACETATE	1 - <5	141-78-6	
04	ETHYL ALCOHOL	20 - <30	64-17-5	
05	METHYL ALCOHOL	1 - <5	67-56-1	
06	N-BUTYL ALCOHOL	10 - <20	71-36-3	
07	PHOSPHORIC ACID	1 - <5	7664-38-2	

* Carcinogens: O = OSHA, A = ACGIH, N = NTP; I = IARC

SARA TITLE III & CERCLA CLASSIFICATIONS

REF	SARA 302 RQ (LBS)	SARA 302 TPQ (LBS)	SARA 311/312 SA	CA	EN	FI	PR	RE
01	5000	NOT ESTAB	Y	Y	N	Y	N	N
02	1000	NOT ESTAB	Y	Y	N	Y	N	N
03	5000	NOT ESTAB	Y	Y	N	Y	N	N
04	NOT ESTAB	NOT ESTAB	N	Y	N	Y	N	N
05	5000	NOT ESTAB	N	Y	N	Y	N	N
06	5000	NOT ESTAB	Y	Y	N	Y	N	N
07	5000	NOT ESTAB	Y	Y	N	Y	N	N
			Y	Y	N	N	N	N

SARA 311/312 CATEGORIES FOR THIS PRODUCT: ACUTE = Y, CHRONIC = N, FLAMMABILITY = Y, PRESSURE = N, REACTIVITY = N

OCCUPATIONAL EXPOSURE LIMITS HAVE BEEN ESTABLISHED FOR THE FOLLOWING MATERIALS:

REF	ACGIH TLV-TWA	ACGIH TLV-STEL	U.S. OSHA PEL-TWA	U.S. OSHA PEL-STEL
01	50 ppm	75 ppm	50 ppm	75 ppm
02	S 50 ppm	NOT ESTAB	100 ppm	150 ppm
03	400 ppm	NOT ESTAB	400 ppm	NOT ESTAB
04	1000 ppm	NOT ESTAB	1000 ppm	NOT ESTAB
05	S 200 ppm	250 ppm	S 200 ppm	250 ppm
06	S 50 ppm	NOT ESTAB	S 50 ppm	NOT ESTAB
07	1 mg/m3	3 mg/m3	1 mg/m3	3 mg/m3

(C- Ceiling Limit, S- Potential Skin Absorption, R- Respirable Dust) (NOT ESTAB = NOT ESTABLISHED, = NOT APPLICABLE)

PRODUCT STATUS RELATIVE TO THE U.S. EPA TOXIC SUBSTANCES CONTROL ACT

All chemical substances in this product are listed on the U.S. TSCA Inventory or are otherwise exempt from TSCA Inventory reporting requirements.

SECTION 3 - HAZARDS IDENTIFICATION

EFFECTS OF OVEREXPOSURE FROM:

- **INGESTION:** May be fatal or cause blindness if swallowed.
- **EYE CONTACT:** This product contains a material which causes irreversible eye damage.
- **SKIN CONTACT:** May be corrosive. This product contains a material which causes skin burns. May be absorbed through the skin.
- **INHALATION:** Vapor and/or spray mist may be harmful if inhaled. Vapor irritates eyes, nose, and throat. Repeated exposure to high vapor concentrations may cause irritation of the respiratory system and permanent brain and nervous system damage.
- **CHRONIC OVEREXPOSURE:** Avoid long-term and repeated contact. Cannot be made non-poisonous. This product contains toluene. Toluene inhalation in animals (greater than 1500 ppm) and intentional inhalation of toluene containing products by humans (e.g. glue) has caused adverse fetal development effects.

SIGNS AND SYMPTOMS OF OVEREXPOSURE: Eye watering, headaches, nausea, dizziness, and loss of coordination are indications that solvent levels are too high. Intentional misuse by deliberately concentrating and inhaling the contents can be harmful or fatal. Redness, itching, burning sensation and visual disturbances may indicate excessive eye contact. Dryness, itching, cracking, burning, redness, and swelling are conditions associated with excessive skin contact.

MEDICAL CONDITIONS AGGRAVATED BY EXPOSURE: Not applicable.

WARNING: This product contains a chemical known to the State of California to cause birth defects or other reproductive harm.

SECTION 4 - FIRST AID MEASURES

- **INGESTION:** If swallowed, induce vomiting by giving 1 ounce of syrup of ipecac followed by 8 to 16 ounces of water. Wipe out inside mouth to remove any residual material.
- **EYE CONTACT:** In case of eye contact, remove contact lenses, flush eye immediately with a gentle stream of warm water for at least 30 minutes.
- **SKIN CONTACT:** In case of skin contact, flush immediately with plenty of water for at least 15 minutes; followed by waterless hand cleaner and soap and water if the material appears to adhere to skin.
- **INHALATION:** If affected by inhalation of vapor or spray mist, remove to fresh air. Apply artificial respiration and other support measures as required.
- **OTHER:** If ingestion, any type of overexposure or symptoms of overexposure occur during or following the use of this product, contact a poison control center, emergency room or physician immediately; have Material Safety Data Sheet information available.

SECTION 5 - FIRE FIGHTING MEASURES

- **FLASHPOINT:** 44 Degrees F (7 Degrees C) (PENSKY-MARTENS CLOSED CUP)
- **FLAMMABLE LIMITS:** Lower explosion limit (LEL): 2.1
- **Upper explosion limit (UEL):** Not available
- **EXTINGUISHING MEDIA:** Use National Fire Protection Association (NFPA) Class B extinguishers (carbon dioxide, dry chemical, or universal aqueous film forming foam) designed to extinguish NFPA Class IB flammable liquid fires.
- **UNUSUAL FIRE AND EXPLOSION HAZARDS:** Keep this product away from heat, sparks, flame, and other sources of ignition (i.e., pilot lights, electric motors, static electricity). Invisible vapors can travel to a source of ignition and flash back. Do not smoke while using this product. Keep containers tightly closed when not in use. Closed containers may explode when overheated. Do not apply to hot surfaces. Toxic gases may form when this product comes in contact with extreme heat.
- **SPECIAL FIRE FIGHTING PROCEDURES:** Water spray may be ineffective. Water spray may be used to cool closed containers to prevent pressure build-up and possible autoignition or explosion when exposed to extreme heat. If water is used, fog nozzles are preferable. Fire-fighters should wear self-contained breathing apparatus and full protective clothing.

SECTION 6 - ACCIDENTAL RELEASE MEASURES

- **STEPS TO BE TAKEN IN CASE MATERIAL IS RELEASED OR SPILLED:** Provide maximum ventilation. Only personnel equipped with proper respiratory, skin, and eye protection should be permitted in the area. Remove all sources of ignition. Take up spilled material with sand, vermiculite, or other noncombustible absorbent material and place in clean, empty containers for disposal. Only the spilled material and the absorbant should be placed in this container.
- **WASTE DISPOSAL METHOD:** Waste material must be disposed of in accordance with federal, state, provincial, and local environmental control regulations. Empty containers

should be recycled or disposed of through an approved waste management facility

SECTION 7 - HANDLING AND STORAGE

▸HANDLING AND STORAGE PRECAUTIONS: Do not store above 120 degrees F.(48 degrees C). Store large quantities in buildings designed and protected for storage of NFPA Class IB flammable liquids.

▸OTHER PRECAUTIONS: Vapors may collect in low areas. If this material is part of a multiple component system, read the Material Safety Data Sheet(s) for the other component or components before blending as the resulting mixture may have the hazards of all of its parts. Containers should be grounded when pouring. Avoid free fall of liquids in excess of a few inches.

SECTION 8 - EXPOSURE CONTROLS AND PERSONAL PROTECTION

PERSONAL PROTECTIVE EQUIPMENT FOR:

▸EYE PROTECTION: Wear chemical-type splash goggles or full face shield when possibility exists for eye contact due to splashing or spraying liquid, airborne particles, or vapors.

▸SKIN PROTECTION: Wear protective clothing sufficient to cover exposed skin surfaces. For applications where skin contact is likely and impermeable clothing is necessary, select clothing constructed of: butyl rubber. No specific permeation/degradation testing have been done on protective clothing for this product. Recommendations for skin protection are based on infrequent contact with this product. For frequent contact or total immersion, contact a manufacturer of protective clothing for appropriate chemical impervious equipment.

▸RESPIRATORY PROTECTION: Overexposure to vapors may be prevented by ensuring proper ventilation controls, vapor exhaust or fresh air entry. A NIOSH- approved air purifying respirator with the appropriate chemical cartridges or a positive-pressure, air-supplied respirator may also reduce exposure. Read the respirator manufacturer's instructions and literature carefully to determine the type of airborne contaminents against which the respirator is effective, its limitations, and how it is to be properly fitted and used.

▸OTHER EQUIPMENT: Clean contaminated clothing and shoes.

VENTILATION REQUIREMENTS: Provide general dilution or local exhaust ventilation in volume and pattern to keep the concentration of ingredients listed in Section 2 below the lowest suggested exposure limits, the LEL below the stated limit, and to remove decomposition products during welding or flame cutting.

SECTION 9 - PHYSICAL AND CHEMICAL PROPERTIES

(FORMULA VALUES, NOT SALES SPECIFICATIONS)

BOILING RANGE: 149- 246Degrees F	SOLUBILITY IN WATER: 35.2 %
VAPOR PRESSURE: 32.7 mmHg	WEIGHT/GALLON (LBS): 6.99 (U.S.)
VAPOR DENSITY: Heavier than air	pH: Not applicable
% VOLATILE/VOLUME: 98.890	% SOLIDS BY WEIGHT: 2.55
SPECIFIC GRAVITY: .839	EVAPORATION RATE(BuOAc = 100): 204

ODOR/APPEARANCE: Non-viscous liquid with an odor characteristic of the ingredients listed in Section 2.

SECTION 10 - STABILITY AND REACTIVITY

▸This product is normally stable and will not undergo hazardous reactions.

▸INCOMPATIBILITY (MATERIALS AND CONDITIONS TO AVOID): Avoid contact with strong alkalies, strong mineral acids, or strong oxidizing agents.

▸HAZARDOUS DECOMPOSITION PRODUCTS: May produce the following hazardous decomposition products when exposed to extreme heat: carbon monoxide ; carbon dioxide ; phosphorus pentoxide ; Extreme heat includes, but is not limited to, flame cutting, brazing, and welding.

Hazardous Materials Identification System (HMIS) and National Fire Protection Association (NFPA) Ratings:

HMIS Rating		NFPA Rating	
HEALTH	3	HEALTH	3
FLAMMABILITY	3	FLAMMABILITY	3
REACTIVITY	0	INSTABILITY	0

Rating System: 0 = Minimal, 1 = Slight, 2 = Moderate, 3 = Serious, 4 = Severe, * = Chronic Effects.

Safe handling of this product requires that all of the information on the MSDS be evaluated for specific work environments and conditions of use.

THIS IS THE END OF THE MSDS FOR: DPX172 (00155146.002DPX172 08/01/00)

MATERIAL SAFETY DATA SHEET
COATINGS AND RESINS GROUP
PPG Industries, Inc.

SECTION 1 - CHEMICAL, PRODUCT, AND COMPANY INFORMATION

PRODUCT CODE/IDENTITY:	DP40LF
REVISION DATE:	06/01/00 (000) 0508
CUSTOMER PART #/NAME:	
PRODUCT TRADE NAME:	EPOXY PRIMER GRAY GREEN
CHEMICAL FAMILY:	Epoxy
EMERGENCY MEDICAL/SPILL INFO:	(304) 843-1300 (U.S.) 91-800-00-214 (MEXICO)
TECHNICAL INFORMATION:	(440) 572-2800
PRODUCT SAFETY/MSDS INFORMATION:	4325 ROSANNA DRIVE, P.O. BOX 9 ALLISON PARK, PA 15101 (412) 492-5555
DATE OF MSDS PREPARATION:	07/27/00

PRIMARY HAZARD WARNING

Flammable. Keep away from heat, sparks, flames, and other sources of ignition. Do not smoke. Extinguish all flames and pilot lights. Turn off stoves, heaters, electrical motors, and other sources of ignition during use and until all vapors/odors are gone. Harmful or fatal if swallowed. May cause moderate skin irritation. Causes severe eye irritation. May be harmful if absorbed through the skin. Prolonged or repeated contact may cause an allergic skin reaction. Vapor and/or spray mist harmful if inhaled. Vapor irritates eyes, nose, and throat.

THIS MATERIAL SAFETY DATA SHEET HAS BEEN PREPARED IN ACCORDANCE WITH THE OSHA HAZARD COMMUNICATION STANDARD (29 CFR 1910.1200), THE SUPPLIER NOTIFICATION REQUIREMENTS OF SARA TITLE III, SECTION 313, AND OTHER APPLICABLE RIGHT-TO-KNOW REGULATIONS.

SECTION 2 - COMPOSITION/INFORMATION ON INGREDIENTS

REF	HAZARDOUS INGREDIENTS	PERCENT	CAS NUMBER	CARCINOGEN*
01	ETHYL BENZENE	0.1 - <1	100-41-4	
02	METHYL ISOBUTYL KETONE	5 - <10	108-10-1	
03	TOLUENE	1 - <5	108-88-3	
04	METHYL (N AMYL) KETONE	10 - <20	110-43-0	
05	2-BUTOXY ETHANOL	1 - <5	111-76-2	
06	AMORPHOUS SILICA	1 - <5	112926-00-8	
07	CALCIUM CARBONATE	10 - <20	1317-65-3	
08	XYLENES	1 - <5	1330-20-7	
09	CARBON BLACK	0.1 - <1	1333-86-4	I
10	TITANIUM DIOXIDE	1 - <5	13463-67-7	
11	TALC	1 - <5	14807-96-6	
12	QUARTZ	0.1 - <1	14808-60-7	I N O
13	EPOXY RESIN	10 - <20	25068-38-6	
14	VINYL RESIN	1 - <5	25085-49-3	
15	AROMATIC NAPHTHA	1 - <5	64742-95-6	
16	BARIUM SULFATE	10 - <20	7727-43-7	
17	1,2,4 TRIMETHYL BENZENE	1 - <5	95-63-6	

* Carcinogens: O = OSHA; A = ACGIH; N = NTP; I = IARC

SARA TITLE III & CERCLA CLASSIFICATIONS

REF	SARA 302 RQ (LBS)	SARA 302 TPQ (LBS)	SARA 313	SARA 311/312 AC	CH	FL	PR	RE
01	1000	NOT ESTAB	Y	Y	Y	Y	N	N
02	5000	NOT ESTAB	Y	Y	N	Y	N	N
03	1000	NOT ESTAB	Y	Y	N	Y	N	N
04	NOT ESTAB	NOT ESTAB	N	Y	N	Y	N	N
05	NOT ESTAB	NOT ESTAB	Y	Y	Y	Y	N	N
06	NOT ESTAB	NOT ESTAB	N	N	N	N	N	N
07	NOT ESTAB	NOT ESTAB	N	N	N	N	N	N
08	100	NOT ESTAB	Y	Y	N	Y	N	R
09	NOT ESTAB	NOT ESTAB	N	N	Y	N	N	N
10	NOT ESTAB	NOT ESTAB	N	N	N	N	N	N
11	NOT ESTAB	NOT ESTAB	N	N	N	N	N	N
12	NOT ESTAB	NOT ESTAB	N	N	Y	N	N	N
13	NOT ESTAB	NOT ESTAB	N	Y	N	N	N	N
14	NOT ESTAB	NOT ESTAB	N	Y	N	N	N	N
15	NOT ESTAB	NOT ESTAB	N	Y	N	Y	N	N
16	NOT ESTAB	NOT ESTAB	N	N	N	N	N	N
17	NOT ESTAB	NOT ESTAB	Y	Y	N	Y	N	N

SARA 311/312 CATEGORIES FOR THIS PRODUCT: ACUTE = Y, CHRONIC = Y, FLAMMABILITY = Y, PRESSURE = N, REACTIVITY = N

OCCUPATIONAL EXPOSURE LIMITS HAVE BEEN ESTABLISHED FOR THE FOLLOWING MATERIALS.

REF	ACGIH TLV TWA	ACGIH TLV-STEL	U.S. OSHA PEL TWA	U.S. OSHA PEL STEL
01	100 ppm	125 ppm	100 ppm	125 ppm
02	50 ppm	75 ppm	50 ppm	75 ppm
03	S 50 ppm	NOT ESTAB	100 ppm	150 ppm
04	50 ppm	NOT ESTAB	100 ppm	NOT ESTAB
05	S 20 PPM	NOT ESTAB	S 25 ppm	NOT ESTAB
06	10 mg/m3	NOT ESTAB	6 mg/m3	NOT ESTAB
07	10 mg/m3	NOT ESTAB	R 5 mg/m3	NOT ESTAB
08	100 ppm	150 ppm	100 ppm	150 ppm
09	3.5 mg/m3	NOT ESTAB	3.5 mg/m3	NOT ESTAB
10	10 mg/m3	NOT ESTAB	10 mg/m3	NOT ESTAB
11	R 2 mg/m3	NOT ESTAB	R 2 mg/m3	NOT ESTAB
12	R 0.1 mg/m3	NOT ESTAB	R 0.1 mg/m3	NOT ESTAB
13	NOT ESTAB	NOT ESTAB	NOT ESTAB	NOT ESTAB
14	NOT ESTAB	NOT ESTAB	NOT ESTAB	NOT ESTAB
15	NOT ESTAB	NOT ESTAB	NOT ESTAB	NOT ESTAB
16	10 mg/m3	NOT ESTAB	R 5 mg/m3	NOT ESTAB
17	NOT ESTAB	NOT ESTAB	NOT ESTAB	NOT ESTAB

(C- Ceiling Limit; S- Potential Skin Absorption; R- Respirable Dust) (NOT ESTAB = NOT ESTABLISHED = NOT APPLICABLE)

PRODUCT STATUS RELATIVE TO THE U.S. EPA TOXIC SUBSTANCES CONTROL ACT

All chemical substances in this product are listed on the U.S. TSCA Inventory or are otherwise exempt from TSCA Inventory reporting requirements.

SECTION 3 - HAZARDS IDENTIFICATION

EFFECTS OF OVEREXPOSURE FROM:

▸INGESTION: Harmful or fatal if swallowed

▸EYE CONTACT: Causes severe eye irritation.

▸SKIN CONTACT: May cause moderate skin irritation. May be harmful if absorbed through the skin. Prolonged or repeated contact may cause an allergic skin reaction.

▸INHALATION: Vapor and/or spray mist harmful if inhaled. Vapor irritates eyes, nose, and throat. Repeated exposure to high vapor concentrations may cause irritation of the respiratory system and permanent brain and nervous system damage.

▸CHRONIC OVEREXPOSURE: Avoid long-term and repeated contact. This product contains crystalline silica which has been classified as a human carcinogen by IARC. Long-term exposures may also lead to a disabling lung condition known as silicosis. The risk depends on the duration and level of exposure to dust from sanding surfaces or mist from spray applications. Use of appropriate personal protective equipment and/or engineering controls should be employed whenever these types of operations are being performed. This product contains an ethylene series glycol ether and/or acetate which has been shown to cause adverse effects on the kidneys, liver, blood and/or blood-forming tissue. This product contains titanium dioxide. Animals inhaling massive quantities of titanium dioxide dust in a long-term study developed lung tumors. Studies with humans involved in manufacture of this pigment indicate no increased risk of cancer from exposure. Potential for inhalation of titanium dioxide dusts from coatings is very limited. Since overexposures are not expected, there is no significant hazard for man. This product contains toluene. Toluene inhalation in animals (greater than 1500 ppm) and intentional inhalation of toluene-containing products by humans (e.g. glue) has caused adverse fetal development effects. This product contains talc. In a lifetime inhalation study female rats exposed to an elevated respirable concentration (9 times the Permissible Exposure Limit) of cosmetic grade talc developed lung cancer. To date, no U.S. regulatory agency has classified talc as a carcinogen based on this data. This product contains carbon black which has been rated an IARC 2B carcinogen due to animal data. Ethylbenzene has been reported by NTP to cause cancer in laboratory animals following a chronic (2 year) inhalation exposure. Dose levels of 75, 250 and 750 ppm were used, with evidence of carcinogenicity found in the kidneys of rats and the lung and liver of mice at 750 ppm. The No Observed Effect Level (NOEL) was 75 ppm. The relevance of these findings to humans is uncertain, but appropriate safeguards should be employed to reduce or eliminate inhalation exposure to ethylbenzene. High exposures to xylenes in some animal studies have been reported to cause health effects on the developing embryo and fetus. These effects were often at levels toxic to the mother. The significance of these findings to humans has not been determined. In a two-year NTP inhalation study, there was no significant increase in the incidence of any type of tumor in rats exposed to 2-butoxy ethanol at concentrations up

to 125 ppm except a questionable trend in the incidence of adrenal gland tumors in female rats. When mice were exposed to concentrations of 62.5, 125, and 250 ppm, there was some evidence of carcinogenicity found in the liver of male mice and the forestomach of female mice at 250 ppm. The relevance of these findings to humans is unclear.

SIGNS AND SYMPTOMS OF OVEREXPOSURE: Eye watering, headaches, nausea, dizziness, and loss of coordination are indications that solvent levels are too high. Intentional misuse by deliberately concentrating and inhaling the contents can be harmful or fatal. Redness, itching, burning sensation and visual disturbances may indicate excessive eye contact. Dryness, itching, cracking, burning, redness, and swelling are conditions associated with excessive skin contact.

MEDICAL CONDITIONS AGGRAVATED BY EXPOSURE: Not applicable

WARNING: This product contains a chemical(s) known to the State of California to cause cancer and birth defects or other reproductive harm.

SECTION 4 - FIRST AID MEASURES

- **INGESTION:** If swallowed, do not induce vomiting. Gently wipe out inside mouth to remove any residual material.
- **EYE CONTACT:** In case of eye contact, remove contact lenses and flush eyes immediately with a gentle stream of luke warm water for at least 15 minutes.
- **SKIN CONTACT:** In case of skin contact, flush immediately with plenty of water for at least 15 minutes followed by washing with soap and water.
- **INHALATION:** If affected by inhalation of vapor or spray mist, remove to fresh air. Apply artificial respiration and other support measures as required.
- **OTHER:** If ingestion, any type of overexposure or symptoms of overexposure occur during or following the use of this product, contact a poison control center, emergency room or physician immediately, have Material Safety Data Sheet information available.

SECTION 5 - FIRE FIGHTING MEASURES

- **FLASHPOINT:** 80 Degrees F (26 Degrees C) (PENSKY MARTENS CLOSED CUP)
- **FLAMMABLE LIMITS:** Lower explosion limit (LEL): 1.2
- **Upper explosion limit (UEL):** Not available
- **EXTINGUISHING MEDIA:** Use National Fire Protection Association (NFPA) Class B extinguishers (carbon dioxide, dry chemical, or universal aqueous film forming foam) designed to extinguish NFPA Class IC flammable liquid fires.
- **UNUSUAL FIRE AND EXPLOSION HAZARDS:** Keep this product away from heat, sparks, flame, and other sources of ignition (i.e., pilot lights, electric motors, static electricity). Invisible vapors can travel to a source of ignition and flash back. Do not smoke while using this product. Keep containers tightly closed when not in use. Closed containers may explode when overheated. Do not apply to hot surfaces. Toxic gases may form when this product comes in contact with extreme heat.
- **SPECIAL FIRE FIGHTING PROCEDURES:** Water spray may be ineffective. Water spray may be used to cool closed containers to prevent pressure build-up and possible autoignition or explosion when exposed to extreme heat. If water is used, fog nozzles are preferable. Fire-fighters should wear self-contained breathing apparatus and full protective clothing.

SECTION 6 - ACCIDENTAL RELEASE MEASURES

- **STEPS TO BE TAKEN IN CASE MATERIAL IS RELEASED OR SPILLED:** Provide maximum ventilation. Only personnel equipped with proper respiratory, skin, and eye protection should be permitted in the area. Remove all sources of ignition. Take up spilled material with sand, vermiculite, or other noncombustible absorbent material and place in clean, empty containers for disposal. Only the spilled material and the absorbant should be placed in this container.
- **WASTE DISPOSAL METHOD:** Waste material must be disposed of in accordance with federal, state, provincial, and local environmental control regulations. Empty containers should be recycled or disposed of through an approved waste management facility.

SECTION 7 - HANDLING AND STORAGE

- **HANDLING AND STORAGE PRECAUTIONS:** Do not store above 120 degrees F.(48 degrees C.). Store large quantities in buildings designed and protected for storage of NFPA Class IC flammable liquids.
- **OTHER PRECAUTIONS:** Vapors may collect in low areas. If this material is part of a multiple component system, read the Material Safety Data Sheet(s) for the other component or components before blending as the resulting mixture may have the hazards of all of its parts. Containers should be grounded when pouring. Avoid free fall of liquids in excess of a few inches.

SECTION 8 - EXPOSURE CONTROLS AND PERSONAL PROTECTION

PERSONAL PROTECTIVE EQUIPMENT FOR:

- **EYE PROTECTION:** Wear chemical-type splash goggles when possibility exists for eye contact due to splashing or spraying liquid, airborne particles, or vapors.
- **SKIN PROTECTION:** Wear protective clothing to prevent skin contact. Apron and gloves should be constructed of: nitrile rubber. No specific permeation/degradation testing have been done on protective clothing for this product. Recommendations for skin protection are based on infrequent contact with this product. For frequent contact or total immersion, contact a manufacturer of protective clothing for appropriate chemical impervious equipment.
- **RESPIRATORY PROTECTION:** Overexposure to vapors may be prevented by ensuring proper ventilation controls, vapor exhaust or fresh air entry. A NIOSH- approved air purifying respirator with the appropriate chemical cartridges or a positive-pressure, air-supplied respirator may also reduce exposure. Read the respirator manufacturer's instructions and literature carefully to determine the type of airborne contaminants against which the respirator is effective, its limitations, and how it is to be properly fitted and used.
- **OTHER EQUIPMENT:** Clean contaminated clothing and shoes.

VENTILATION REQUIREMENTS: Provide general dilution or local exhaust ventilation in volume and pattern to keep the concentration of ingredients listed in Section 2 below the lowest suggested exposure limits, the LEL below the stated limit, and to remove decomposition products during welding or flame cutting.

SECTION 9 - PHYSICAL AND CHEMICAL PROPERTIES

(FORMULA VALUES, NOT SALES SPECIFICATIONS)

BOILING RANGE: 230- 381Degrees F
VAPOR PRESSURE: 7.5 mmHg
VAPOR DENSITY: Heavier than air
% VOLATILE/VOLUME: 59.190
SPECIFIC GRAVITY: 1.385
SOLUBILITY IN WATER: 5.0 %
WEIGHT/GALLON (LBS): 11.54 (U.S.)
pH: Not applicable
% SOLIDS BY WEIGHT: 63.83
EVAPORATION RATE(BuOAc = 100): 78
ODOR/APPEARANCE: Viscous liquid with an odor characteristic of the solvents listed in Section 2

SECTION 10 - STABILITY AND REACTIVITY

- This product is normally stable and will not undergo hazardous reactions.
- **INCOMPATIBILITY (MATERIALS AND CONDITIONS TO AVOID):** Avoid contact with strong alkalies, strong mineral acids, or strong oxidizing agents.
- **HAZARDOUS DECOMPOSITION PRODUCTS:** May produce the following hazardous decomposition products when exposed to extreme heat: carbon monoxide ; carbon dioxide ; silicon oxides ; lower molecular weight polymer fractions, oxides of barium , oxides of sulfur ; oxides of phosphorus . Extreme heat includes, but is not limited to, flame cutting, brazing, and welding.

Hazardous Materials Identification System (HMIS) and National Fire Protection Association (NFPA) Ratings

HMIS Rating		NFPA Rating	
HEALTH	2*	HEALTH	2
FLAMMABILITY	3	FLAMMABILITY	3
REACTIVITY	0	INSTABILITY	0

Rating System: 0 = Minimal, 1 = Slight, 2 = Moderate, 3 = Serious, 4 = Severe, * = Chronic Effects

Safe handling of this product requires that all of the information on the MSDS be evaluated for specific work environments and conditions of use.

THIS IS THE END OF THE MSDS FOR: DP40LF (00178980 001DP40LF 07/27/00)

MATERIAL SAFETY DATA SHEET
COATINGS AND RESINS GROUP
PPG Industries, Inc.

SECTION 1 - CHEMICAL, PRODUCT, AND COMPANY INFORMATION

PRODUCT CODE/IDENTITY	DP401LF
REVISION DATE	01/28/00 (0001 0608
CUSTOMER PART #/NAME	
PRODUCT TRADE NAME	EPOXY PRIMER CATALYST
CHEMICAL FAMILY	Polyamide
EMERGENCY MEDICAL/SPILL INFO	(304) 843 1300 (U.S.) 91 800-00 214 (MEXICO)
TECHNICAL INFORMATION	(440) 572 2800
PRODUCT SAFETY/MSDS INFORMATION	4325 ROSANNA DRIVE P.O. BOX 9 ALLISON PARK, PA 15101 (412) 492-5555
DATE OF MSDS PREPARATION	07/09/90

PRIMARY HAZARD WARNING

Flammable. Keep away from heat, sparks, flames, and other sources of ignition. Do not smoke. Extinguish all flames and pilot lights. Turn off stoves, heaters, electrical motors, and other sources of ignition during use and until all vapors/odors are gone. Harmful or fatal if swallowed. May cause moderate skin irritation. Causes severe eye irritation. May be harmful if absorbed through the skin. Prolonged or repeated contact may cause an allergic skin reaction. Vapor and/or spray mist harmful if inhaled. Vapor irritates eyes, nose and throat.

THIS MATERIAL SAFETY DATA SHEET HAS BEEN PREPARED IN ACCORDANCE WITH THE OSHA HAZARD COMMUNICATION STANDARD (29 CFR 1910.1200). THE SUPPLIER NOTIFICATION REQUIREMENTS OF SARA TITLE III, SECTION 313, AND OTHER APPLICABLE RIGHT-TO-KNOW REGULATIONS.

SECTION 2 - COMPOSITION/INFORMATION ON INGREDIENTS

REF	HAZARDOUS INGREDIENTS	PERCENT	CAS NUMBER	CARCINOGEN*
01	METHYL (N-AMYL) KETONE	20 - 30	110-43-0	
02	2-BUTOXY ETHANOL	5 - 10	111-76-2	
03	XYLENES	10 - 20	1330-20-7	
04	ISOPROPYL ALCOHOL	5 - 10	67-63-0	
05	POLYAMIDE RESIN	20 - 30	68410-23-1	
06	DIISO HEPTYL ACETATE	10 - 20	108838-16-2	

* Carcinogens. O = OSHA, A = ACGIH, N = NTP, I = IARC

SARA TITLE III & CERCLA CLASSIFICATIONS

REF	SARA 302 (EHS)	SARA 304 (RQ)	SARA 311/312 ACUTE	CHRONIC	FIRE	PRESSURE	REACTIVITY
01	NOT ESTAB	NOT ESTAB	N	Y	N	Y	N
02	NOT ESTAB	NOT ESTAB	Y	Y	Y	N	N
03	100	NOT ESTAB	Y	Y	N	Y	N
04	NOT ESTAB	NOT ESTAB	Y	Y	N	Y	N
05	NOT ESTAB	NOT ESTAB	N	Y	N	N	N
06	NOT ESTAB	NOT ESTAB	N	Y	N	Y	N

SARA 311/312 CATEGORIES FOR THIS PRODUCT: ACUTE = Y, CHRONIC = Y, FLAMMABILITY = Y, PRESSURE = N, REACTIVITY = N

OCCUPATIONAL EXPOSURE LIMITS HAVE BEEN ESTABLISHED FOR THE FOLLOWING MATERIALS

REF	ACGIH TLV-TWA	ACGIH TLV-STEL	OSHA PEL-TWA	OSHA PEL-STEL
01	40 ppm	NOT ESTAB	100 ppm	NOT ESTAB
02	20 ppm	NOT ESTAB	25 ppm	NOT ESTAB
03	100 ppm	150 ppm	100 ppm	150 ppm
04	400 ppm	500 ppm	400 ppm	500 ppm
05	NOT ESTAB	NOT ESTAB	NOT ESTAB	NOT ESTAB
06	NOT ESTAB	NOT ESTAB	NOT ESTAB	NOT ESTAB

(C = Ceiling Limit, S = Potential Skin Absorption, R = Respirable Dust) (NOT ESTAB = NOT ESTABLISHED, - = NOT APPLICABLE)

PRODUCT STATUS RELATIVE TO THE U.S. EPA TOXIC SUBSTANCES CONTROL ACT

All chemical substances in this product are listed on the U.S. TSCA Inventory or are otherwise exempt from TSCA Inventory reporting requirements.

SECTION 3 - HAZARDS IDENTIFICATION

EFFECTS OF OVEREXPOSURE FROM:

- **INGESTION:** Harmful or fatal if swallowed.
- **EYE CONTACT:** Causes severe eye irritation.
- **SKIN CONTACT:** May cause moderate skin irritation. May be harmful if absorbed through the skin. Prolonged or repeated contact may cause an allergic skin reaction.
- **INHALATION:** Vapor and/or spray mist harmful if inhaled. Vapor irritates eyes, nose, and throat. Repeated exposure to high vapor concentrations may cause irritation of the respiratory system and permanent brain and nervous system damage.
- **CHRONIC OVEREXPOSURE:** Avoid long-term and repeated contact. This product contains an ethylene series glycol ether and/or acetate which has been shown to cause adverse effects on the kidneys, liver, blood and/or blood-forming tissue. High exposures to xylenes in some animal studies have been reported to cause health effects on the developing embryo and fetus. These effects were often at levels toxic to the mother. The significance of these findings to humans has not been determined. In a two-year NTP inhalation study, there was no significant increase in the incidence of any type of tumor in rats exposed to 2-butoxy ethanol at concentrations up to 125 ppm except a questionable trend in the incidence of adrenal gland tumors in female rats. When mice were exposed to concentrations of 62.5, 125, and 250 ppm, there was some evidence of carcinogenicity found in the liver of male mice and the forestomach of female mice at 250 ppm. The relevance of these findings to humans is unclear.

SIGNS AND SYMPTOMS OF OVEREXPOSURE: Eye watering, headaches, nausea, dizziness, and loss of coordination are indications that solvent levels are too high. Intentional misuse by deliberately concentrating and inhaling the contents can be harmful or fatal. Redness, itching, burning sensation and visual disturbances may indicate excessive eye contact. Dryness, itching, cracking, burning, redness, and swelling are conditions associated with excessive skin contact.

MEDICAL CONDITIONS AGGRAVATED BY EXPOSURE: Not applicable.

SECTION 4 - FIRST AID MEASURES

- **INGESTION:** If swallowed, do not induce vomiting. Gently wipe out inside mouth to remove any residual material.
- **EYE CONTACT:** In case of eye contact, remove contact lenses, flush eye immediately with a gentle stream of warm water for at least 30 minutes.
- **SKIN CONTACT:** In case of skin contact, flush immediately with plenty of water for at least 15 minutes followed by washing with soap and water.
- **INHALATION:** If affected by inhalation of vapor or spray mist, remove to fresh air. Apply artificial respiration and other support measures as required.
- **OTHER:** If ingestion, any type of overexposure or symptoms of overexposure occur during or following the use of this product, contact a poison control center, emergency room or physician immediately. Have Material Safety Data Sheet information available.

SECTION 5 - FIRE FIGHTING MEASURES

- **FLASHPOINT:** 40 Degrees F (4 Degrees C) (PENSKY-MARTENS CLOSED CUP)
- **FLAMMABLE LIMITS:** Lower explosion limit (LEL): 1.5
- **Upper explosion limit (UEL):** Not available
- **EXTINGUISHING MEDIA:** Use National Fire Protection Association (NFPA) Class B extinguishers (carbon dioxide, dry chemical, or universal aqueous film forming foam) designed to extinguish NFPA Class IB flammable liquid fires.
- **UNUSUAL FIRE AND EXPLOSION HAZARDS:** Keep this product away from heat, sparks, flame, and other sources of ignition (i.e., pilot lights, electric motors, static electricity). Invisible vapors can travel to a source of ignition and flash back. Do not smoke while using this product. Keep containers tightly closed when not in use. Closed containers may explode when overheated. Do not apply to hot surfaces. Toxic gases may form when this product comes in contact with extreme heat.
- **SPECIAL FIRE FIGHTING PROCEDURES:** Water spray may be ineffective. Water spray may be used to cool closed containers to prevent pressure build-up and possible autoignition or explosion when exposed to extreme heat. If water is used, fog nozzles are preferable. Fire fighters should wear self contained breathing apparatus and full protective clothing.

SECTION 6 - ACCIDENTAL RELEASE MEASURES

- **STEPS TO BE TAKEN IN CASE MATERIAL IS RELEASED OR SPILLED:** Provide maximum ventilation. Only personnel equipped with proper respiratory, skin, and eye protection should be permitted in the area. Remove all sources of ignition. Take up spilled material with sand, vermiculite, or other noncombustible absorbent material and place in clean, empty containers for disposal. Only the spilled material and the absorbant should be placed in this container.

▸WASTE DISPOSAL METHOD: Waste material must be disposed of in accordance with federal, state, provincial, and local environmental control regulations. Empty containers should be recycled or disposed of through an approved waste management facility.

SECTION 7 - HANDLING AND STORAGE

▸HANDLING AND STORAGE PRECAUTIONS: Do not store above 120 degrees F.(48 degrees C.). Store large quantities in buildings designed and protected for storage of NFPA Class IB flammable liquids.

▸OTHER PRECAUTIONS: Vapors may collect in low areas. If this material is part of a multiple component system, read the Material Safety Data Sheet(s) for the other component or components before blending as the resulting mixture may have the hazards of all of its parts. Containers should be grounded when pouring. Avoid free fall of liquids in excess of a few inches.

SECTION 8 - EXPOSURE CONTROLS AND PERSONAL PROTECTION

PERSONAL PROTECTIVE EQUIPMENT FOR:

▸EYE PROTECTION: Wear chemical-type splash goggles when possibility exists for eye contact due to splashing or spraying liquid, airborne particles, or vapors.

▸SKIN PROTECTION: Wear protective clothing to prevent skin contact. Apron and gloves should be constructed of: neoprene rubber. No specific permeation/degradation testing have been done on protective clothing for this product. Recommendations for skin protection are based on infrequent contact with this product. For frequent contact or total immersion, contact a manufacturer of protective clothing for appropriate chemical impervious equipment.

▸RESPIRATORY PROTECTION: Overexposure to vapors may be prevented by ensuring proper ventilation controls, vapor exhaust or fresh air entry. A NIOSH- approved air purifying respirator with the appropriate chemical cartridges or a positive-pressure, air-supplied respirator may also reduce exposure. Read the respirator manufacturer's instructions and literature carefully to determine the type of airborne contaminants against which the respirator is effective, its limitations, and how it is to be properly fitted and used.

▸OTHER EQUIPMENT: Clean contaminated clothing and shoes.

VENTILATION REQUIREMENTS: Provide general dilution or local exhaust ventilation in volume and pattern to keep the concentration of ingredients listed in Section 2 below the lowest suggested exposure limits, the LEL below the stated limit, and to remove decomposition products during welding or flame cutting.

SECTION 9 - PHYSICAL AND CHEMICAL PROPERTIES

[FORMULA VALUES, NOT SALES SPECIFICATIONS]

BOILING RANGE: 180- 392Degrees F	SOLUBILITY IN WATER: 15.4 %
VAPOR PRESSURE: 7.9 mmHg	WEIGHT/GALLON (LBS): 7.32 (U.S.)
VAPOR DENSITY: Heavier than air	pH: Not applicable
% VOLATILE/VOLUME: 73.000	% SOLIDS BY WEIGHT: 29.77
SPECIFIC GRAVITY: .878	EVAPORATION RATE(BuOAc=100): 60

ODOR/APPEARANCE: Viscous liquid with an odor characteristic of the solvents listed in Section 2.

SECTION 10 - STABILITY AND REACTIVITY

▸This product is normally stable and will not undergo hazardous reactions.

▸INCOMPATIBILITY (MATERIALS AND CONDITIONS TO AVOID): Avoid contact with strong alkalies, strong mineral acids, or strong oxidizing agents.

▸HAZARDOUS DECOMPOSITION PRODUCTS: May produce the following hazardous decomposition products when exposed to extreme heat: carbon monoxide , carbon dioxide , lower molecular weight polymer fractions; oxides of nitrogen . Extreme heat includes, but is not limited to, flame cutting, brazing, and welding.

Hazardous Materials Identification System (HMIS) and National Fire Protection Association (NFPA) Ratings:

HMIS Rating		NFPA Rating	
HEALTH	*	HEALTH	2
FLAMMABILITY	1	FLAMMABILITY	3
REACTIVITY	0	INSTABILITY	0

Rating System 0 = Minimal, 1 = Slight, 2 = Moderate, 3 = Serious, 4 = Severe, * = Chronic Effects

Safe handling of this product requires that all of the information on the MSDS be evaluated for specific work environments and conditions of use.

THIS IS THE END OF THE MSDS FOR DP401LF (00168202 002DP401LF 07/29/00)

MATERIAL SAFETY DATA SHEET
COATINGS AND RESINS GROUP
PPG Industries, Inc.

SECTION 1 - CHEMICAL, PRODUCT, AND COMPANY INFORMATION

PRODUCT CODE/IDENTITY: K38

PRODUCT TRADE NAME: HIGH BUILD PRIMER SURFACER

REVISION DATE: 07/13/00 (0001 0808)

CUSTOMER PART #/NAME:

CHEMICAL FAMILY: Acrylic

EMERGENCY MEDICAL/SPILL INFO: (304) 843-1330 (U.S.)
91-800-00-214 (MEXICO)

TECHNICAL INFORMATION: (440) 572-2600

PRODUCT SAFETY/MSDS INFORMATION: 4325 ROSANNA DRIVE, P.O. BOX 9
ALLISON PARK, PA 15101
(412) 492-5555

DATE OF MSDS PREPARATION: 06-02-01

PRIMARY HAZARD NOTE

Flammable. Keep away from heat, sparks, flames, and other sources of ignition. Do not smoke. Extinguish all flames and pilot lights. Turn off stoves, heaters, electrical motors, and other sources of ignition during use and until all vapor/odors are gone. Harmful if swallowed. May cause moderate skin irritation. Causes severe eye irritation. May be absorbed through the skin. Vapor and/or spray mist may be harmful if inhaled. Vapor irritates eyes, nose, and throat.

THIS MATERIAL SAFETY DATA SHEET HAS BEEN PREPARED IN ACCORDANCE WITH THE OSHA HAZARD COMMUNICATION STANDARD (29 CFR 1910.1200), THE SUPPLIER NOTIFICATION REQUIREMENTS OF SARA TITLE III, SECTION 313, AND OTHER APPLICABLE RIGHT-TO-KNOW REGULATIONS.

TRANSPORTATION OF DANGEROUS GOODS

PROPER SHIPPING NAME: Paint
NOS TECHNICAL NAME: None
HAZARD CLASS: 3
SUBSIDIARY CLASS: None
UN NUMBER: UN1263
PACKING GROUP: III
MARINE POLLUTANT: None
USA-RQ, HAZARDOUS SUBSTANCE: None
USA-RQ, HAZARDOUS SUBSTANCE THRESHOLD SHIP WEIGHT: None
CANADA SCHEDULE XII, 9.2: None
CANADA SCHEDULE XII,9.2 THRESHOLD SHIP WEIGHT: None

SECTION 2 - COMPOSITION/INFORMATION ON INGREDIENTS

REF	HAZARDOUS INGREDIENTS	PERCENT	CAS NUMBER	CARCINOGEN*
01	ETHYL BENZENE	1 - <5	100-41-4	I
02	TOLUENE	1 - <5	108-88-3	
03	METHYL (N-AMYL) KETONE	1 - <5	110-43-0	
04	N-BUTYL ACETATE	5 - <10	123-86-4	
05	CALCIUM CARBONATE	10 - <20	1317-65-3	
06	XYLENES	10- <20	1330-20-7	
07	TITANIUM DIOXIDE	10- <20	13463-67-7	
08	TALC	10- <20	14807-96-6	
09	QUARTZ	0.1- <1	14808-60-7	I N O A
10	AROMATIC NAPHTHA	1 - <5	64742-95-6	
11	BARIUM SULFATE	5 - <10	7727-43-7	
12	1,2,4-TRIMETHYL BENZENE	1 - <5	95-63-6	

* Carcinogens: O = OSHA; A = ACGIH; N = NTP; I = IARC

SARA TITLE III & CERCLA CLASSIFICATIONS

REF	SARA 102 RQ (LBS)	SARA 302 TPQ (LBS)	SARA 313	SARA 311/312 AC	CH	FL	PR	RE
01	1000 lbs	NOT ESTAB	Y	Y	Y	Y	N	N
02	1000 lbs	NOT ESTAB	Y	Y	N	Y	N	N
03	NOT ESTAB	NOT ESTAB	N	Y	N	Y	N	N
04	5000 lbs	NOT ESTAB	N	Y	N	Y	N	N
05	NOT ESTAB	NOT ESTAB	N	N	N	N	N	N
06	100 lbs	NOT ESTAB	Y	Y	N	Y	N	N
07	NOT ESTAB	NOT ESTAB	N	N	N	N	N	N
08	NOT ESTAB	NOT ESTAB	N	N	N	N	N	N
09	NOT ESTAB	NOT ESTAB	N	N	Y	N	N	N
09	NOT ESTAB	NOT ESTAB	Y	(AS QUARTZ)				
10	NOT ESTAB	NOT ESTAB	N	Y	N	Y	N	N
11	NOT ESTAB	NOT ESTAB	N	N	N	N	N	N
12	NOT ESTAB	NOT ESTAB	Y	Y	N	Y	N	N

SARA 311/312 CATEGORIES FOR THIS PRODUCT. ACUTE = Y, CHRONIC = Y, FLAMMABILITY = Y, PRESSURE = N, REACTIVITY = N

OCCUPATIONAL EXPOSURE LIMITS HAVE BEEN ESTABLISHED FOR THE FOLLOWING MATERIALS:

REF	ACGIH TLV-TWA	ACGIH TLV-STEL	U.S. OSHA PEL-TWA	U.S. OSHA PEL-STEL	
01	100 ppm	125 ppm	100 ppm	125 ppm	
02	S- 50 ppm	NOT ESTAB	100 ppm	150 ppm	
03	50 ppm	NOT ESTAB	100 ppm	NOT ESTAB	
04	150 PPM	200 ppm	150 ppm	200 ppm	
05	10 mg/m3	NOT ESTAB	R- 5 mg/m3	NOT ESTAB	
06	100 ppm	150 ppm	100 ppm	150 ppm	
07	10 mg/m3	NOT ESTAB	10 mg/m3	NOT ESTAB	
08	R 2 mg/m3	NOT ESTAB	R- 2 mg/m3	NOT ESTAB	
09	R- 0.05 MG/M3	NOT ESTAB	R- 0.1 mg/m3	NOT ESTAB	
09	NOT ESTAB	NOT ESTAB	NOT ESTAB	NOT ESTAB	(AS QUARTZ)
10	NOT ESTAB	NOT ESTAB	NOT ESTAB	NOT ESTAB	
11	10 mg/m3	NOT ESTAB	R- 5 mg/m3	NOT ESTAB	
12	NOT ESTAB	NOT ESTAB	NOT ESTAB	NOT ESTAB	

(C- Ceiling Limit; S- Potential Skin Absorption; R- Respirable Dust)

REF	ACGIH TLV - BASIS - CRITICAL EFFECT(S)
01	irritation, CNS
02	CNS
03	irritation
04	irritation
05	irritation
06	irritation
07	lung
08	lung
09	pulmonary fibrosis silicosis
09	(AS QUARTZ) silicosis, pulmonary function,
09	(AS QUARTZ) pulmonary fibrosis, cancer
10	NOT ESTAB
11	pneumoconiosis(baritosis)
12	NOT ESTAB

(ACGIH TLV BASIS - CRITICAL EFFECT(S): CNS-CENTRAL NERVOUS SYSTEM; CVS-CARDIOVASCULAR SYSTEM; CWP-COAL WORKER'S PNEUMOCONIOSIS; GI-GASTROINTESTINAL) (NOT ESTAB. = NOT ESTABLISHED = NOT APPLICABLE) (NOT ESTAB. = NOT ESTABLISHED = NOT APPLICABLE)

PRODUCT STATUS RELATIVE TO THE U.S. EPA TOXIC SUBSTANCES CONTROL ACT

All chemical substances in this product are listed on the U.S. TSCA Inventory or are otherwise exempt from TSCA Inventory reporting requirements.

SECTION 3 - HAZARDS IDENTIFICATION

EFFECTS OF OVEREXPOSURE FROM:

- **INGESTION:** Harmful if swallowed.
- **EYE CONTACT:** Causes severe eye irritation.
- **SKIN CONTACT:** May cause moderate skin irritation. May be absorbed through the skin.
- **INHALATION:** Vapor and/or spray mist may be harmful if inhaled. Vapor irritates eyes, nose, and throat. Repeated exposure to high vapor concentrations may cause irritation of the respiratory system and permanent brain and nervous system damage.
- **CHRONIC OVEREXPOSURE:** Avoid long-term and repeated contact. This product contains crystalline silica which has been classified as a human carcinogen by IARC. Long-term exposures may also lead to a disabling lung condition known as silicosis. The risk depends on the duration and level of exposure to dust from sanding surfaces or mist from spray applications. Use of appropriate personal protective equipment and/or engineering controls should be employed whenever these types of operations are being performed. This product contains titanium dioxide. Animals inhaling massive quantities of titanium dioxide dust in a long-term study developed lung tumors. Studies with humans involved in manufacture of this pigment indicate no increased risk of cancer from exposure. Potential for inhalation of titanium dioxide dusts from coatings is very limited. Since overexposures are not expected, there is no significant hazard for man. This product contains toluene.

Toluene inhalation in animals (greater than 1500 ppm) and intentional inhalation of toluene-containing products by humans (e.g. glue) has caused adverse fetal development effects. This product contains talc. In a lifetime inhalation study female rats exposed to an elevated respirable concentration (9 times the Permissible Exposure Limit) of cosmetic grade talc developed lung cancer. To date, no U.S. regulatory agency has classified talc as a carcinogen based on this data. Ethylbenzene has been reported by NTP to cause cancer in laboratory animals following a chronic (2 year) inhalation exposure. Carcinogenicity was found in the kidneys of rats and the lung and liver of mice at the 750 ppm dose level. The No Observed Effect Level (NOEL) was 75 ppm. The International Agency for Research on Cancer (IARC) has evaluated ethylbenzene and classified it as a possible human carcinogen (Group 2B) based on sufficient evidence for carcinogenicity in experimental animals, but inadequate evidence for cancer in exposed humans. High exposures to xylenes in some animal studies have been reported to cause health effects on the developing embryo and fetus. These effects were often at levels toxic to the mother. The significance of these findings to humans has not been determined.

SIGNS AND SYMPTOMS OF OVEREXPOSURE: Eye watering, headaches, nausea, dizziness, and loss of coordination are indications that solvent levels are too high. Intentional misuse by deliberately concentrating and inhaling the contents can be harmful or fatal. Redness, itching, burning sensation and visual disturbances may indicate excessive eye contact. Dryness, itching, cracking, burning, redness, and swelling are conditions associated with excessive skin contact.

MEDICAL CONDITIONS AGGRAVATED BY EXPOSURE: Not applicable.

WARNING: This product contains a chemical(s) known to the State of California to cause cancer and birth defects or other reproductive harm.

SECTION 4 - FIRST AID MEASURES

▸**IMPORTANT FIRST AID INFORMATION:** If ingestion, any type of overexposure or symptoms of overexposure occur during or following the use of this product, contact a poison control center, emergency room or physician immediately; have Material Safety Data Sheet information available.

▸**INGESTION:** Gently wipe or rinse the inside of the mouth with water. Sips of water may be given. Never give anything by mouth to an unconscious person. Contact a poison control center, emergency room or physician right away as further treatment may be necessary.

▸**EYE CONTACT:** Remove contact lens and pour a gentle stream of warm water through the affected eye for at least 15 minutes. If irritation persists, contact a poison control center, emergency room, or physician as further treatment may be necessary.

▸**SKIN CONTACT:** Run a gentle stream of water over the affected area for 15 minutes. A mild soap may be used if available. If any symptoms persist, contact a poison control center, emergency room, or physician as further treatment may be necessary.

▸**INHALATION:** Remove from area to fresh air. If symptomatic, contact a poison control center, emergency room or physician for treatment information.

SECTION 5 - FIRE FIGHTING MEASURES

▸**FLASHPOINT:** 81 Degrees F | 27 Degrees C| (PENSKY-MARTENS CLOSED CUP)

▸**FLAMMABLE LIMITS: Lower explosion limit (LEL):** 1.3

▸**Upper explosion limit (UEL):** Not available

▸**EXTINGUISHING MEDIA:** Use National Fire Protection Association (NFPA) Class B extinguishers (carbon dioxide, dry chemical, or universal aqueous film forming foam) designed to extinguish NFPA Class IC flammable liquid fires.

▸**UNUSUAL FIRE AND EXPLOSION HAZARDS:** Keep this product away from heat, sparks, flame, and other sources of ignition (i.e., pilot lights, electric motors, static electricity). Invisible vapors can travel to a source of ignition and flash back. Do not smoke while using this product. Keep containers tightly closed when not in use. Closed containers may explode when overheated. Do not apply to hot surfaces. Toxic gases may form when this product comes in contact with extreme heat.

▸**SPECIAL FIRE FIGHTING PROCEDURES:** Water spray may be ineffective. Water spray may be used to cool closed containers to prevent pressure build-up and possible autoignition or explosion when exposed to extreme heat. If water is used, fog nozzles are preferable. Fire-fighters should wear self-contained breathing apparatus and full protective clothing.

SECTION 6 - ACCIDENTAL RELEASE MEASURES

▸**STEPS TO BE TAKEN IN CASE MATERIAL IS RELEASED OR SPILLED:** Provide maximum ventilation. Only personnel equipped with proper respiratory, skin, and eye protection should be permitted in the area. Remove all sources of ignition. Take up spilled material with sand, vermiculite, or other noncombustible absorbent material and place in clean, empty containers for disposal. Only the spilled material and the absorbant should be placed in this container.

▸**WASTE DISPOSAL METHOD:** Waste material must be disposed of in accordance with federal, state, provincial, and local environmental control regulations. Empty containers should be recycled or disposed of through an approved waste management facility.

SECTION 7 - HANDLING AND STORAGE

▸**HANDLING AND STORAGE PRECAUTIONS:** Do not store above 120 degrees F.(48 degrees C.). Store large quantities in buildings designed and protected for storage of NFPA Class IC flammable liquids.

▸**OTHER PRECAUTIONS:** Vapors may collect in low areas. If this material is part of a multiple component system, read the Material Safety Data Sheet(s) for the other component or components before blending as the resulting mixture may have the hazards of all of its parts. Containers should be grounded when pouring. Avoid free fall of liquids in excess of a few inches.

SECTION 8 - EXPOSURE CONTROLS AND PERSONAL PROTECTION

PERSONAL PROTECTIVE EQUIPMENT FOR:

▸**EYE PROTECTION:** Wear chemical-type splash goggles or full face shield when possibility exists for eye contact due to splashing or spraying liquid, airborne particles, or vapors.

▸**SKIN PROTECTION:** Wear protective clothing to prevent skin contact. Apron and gloves should be constructed of: neoprene rubber or nitrile rubber. No specific permeation/degradation testing have been done on protective clothing for this product. Recommendations for skin protection are based on infrequent contact with this product. For frequent contact or total immersion, contact a manufacturer of protective clothing for appropriate chemical impervious equipment.

▸**RESPIRATORY PROTECTION:** Overexposure to vapors may be prevented by ensuring proper ventilation controls, vapor exhaust or fresh air entry. A NIOSH- approved air purifying respirator with the appropriate chemical cartridges or a positive-pressure, air-supplied respirator may also reduce exposure. Read the respirator manufacturer's instructions and literature carefully to determine the type of airborne contaminants against which the respirator is effective, its limitations, and how it is to be properly fitted and used.

▸**OTHER EQUIPMENT:** Clean contaminated clothing and shoes.

VENTILATION REQUIREMENTS: Provide general dilution or local exhaust ventilation in volume and pattern to keep the concentration of ingredients listed in Section 2 below the lowest suggested exposure limits, the LEL below the stated limit, and to remove decomposition products during welding or flame cutting.

SECTION 9 - PHYSICAL AND CHEMICAL PROPERTIES

[FORMULA VALUES, NOT SALES SPECIFICATIONS]

BOILING RANGE: 214- 410Degrees F	SOLUBILITY IN WATER: .1 %
VAPOR PRESSURE: 8.1 mmHg	WEIGHT/GALLON (LBS): 12.45 (U.S.)
VAPOR DENSITY: Heavier than air	pH: Not determined
% VOLATILE/VOLUME: 65.380	% SOLIDS BY WEIGHT: 67.80
SPECIFIC GRAVITY: 1.494	EVAPORATION RATE(BuOAc=100): 75

ODOR/APPEARANCE: Viscous liquid with an odor characteristic of the solvents listed in Section 2.

SECTION 10 - STABILITY AND REACTIVITY

▸**This product is normally stable and will not undergo hazardous reactions.**

▸**INCOMPATIBILITY (MATERIALS AND CONDITIONS TO AVOID):** Avoid contact with strong alkalies, strong mineral acids, or strong oxidizing agents.

▸**HAZARDOUS DECOMPOSITION PRODUCTS:** May produce the following hazardous decomposition products when exposed to extreme heat: carbon monoxide ; carbon dioxide ; oxides of barium ; oxides of sulfur ; oxides of phosphorus ; lower molecular weight polymer fractions; Extreme heat includes, but is not limited to, flame cutting, brazing, and welding.

Hazardous Materials Identification System (HMIS) and National Fire Protection Association (NFPA) Ratings:

HMIS Rating		NFPA Rating	
HEALTH	2*	HEALTH	2
FLAMMABILITY	3	FLAMMABILITY	3
REACTIVITY	0	INSTABILITY	0

Rating System:0 = Minimal, 1 = Slight, 2 = Moderate, 3 = Serious, 4 = Severe, * = Chronic Effects.

Safe handling of this product requires that all of the information on the MSDS be evaluated for specific work environments and conditions of use.

THIS IS THE END OF THE MSDS FOR: K38 (D0179670.006K38 05/02/01)

Manufactured and Supplied by:
REFINISH PRODUCTS
19699 PROGRESS DRIVE STRONGSVILLE, OH 44149

MATERIAL SAFETY DATA SHEET
COATINGS AND RESINS GROUP
PPG Industries, Inc.

SECTION 1 - CHEMICAL PRODUCT AND COMPANY INFORMATION

PRODUCT CODE/IDENTITY: K93

PRODUCT TRADE NAME: TINTABLE SURFACER/SEALER

REVISION DATE: 01/19/01 (000) 0808

CUSTOMER PART #/NAME:

CHEMICAL FAMILY: Acrylic

EMERGENCY MEDICAL/SPILL INFO: (304) 843-1300 (C.O.)
91-800-00-214 (MEXICO)

TECHNICAL INFORMATION: (440) 572-2800

PRODUCT SAFETY/MSDS INFORMATION: 4325 ROSANNA DRIVE, P.O. BOX 9
ALLISON PARK, PA 15101
(412) 492-5555

DATE OF MSDS PREPARATION: 05-02-01

PRIMARY HAZARD WARNING

Flammable. Keep away from heat, sparks, flames, and other sources of ignition. Do not smoke. Extinguish all flames and pilot lights. Turn off stoves, heaters, electrical motors, and other sources of ignition during use and until all vapors/fumes are gone. Harmful if swallowed. May cause moderate skin irritation. Causes severe eye irritation. May be absorbed through the skin. Vapor and/or spray mist may be harmful if inhaled. Vapor irritates eyes, nose, and throat.

THIS MATERIAL SAFETY DATA SHEET HAS BEEN PREPARED IN ACCORDANCE WITH THE OSHA HAZARD COMMUNICATION STANDARD (29 CFR 1910.1200), THE SUPPLIER NOTIFICATION REQUIREMENTS OF SARA TITLE III, SECTION 313, AND OTHER APPLICABLE RIGHT-TO-KNOW REGULATIONS

TRANSPORTATION OF DANGEROUS GOODS

PROPER SHIPPING NAME: Paint
NOS TECHNICAL NAME: None
HAZARD CLASS: 3
SUBSIDIARY CLASS: None
UN NUMBER: UN1263
PACKING GROUP: III
MARINE POLLUTANT: None
USA-RQ, HAZARDOUS SUBSTANCE: None
USA-RQ, HAZARDOUS SUBSTANCE THRESHOLD SHIP WEIGHT: None
CANADA SCHEDULE XII, 9.2: None
CANADA SCHEDULE XII,9.2 THRESHOLD SHIP WEIGHT: None

SECTION 2 - COMPOSITION/INFORMATION ON INGREDIENTS

REF	HAZARDOUS INGREDIENTS	PERCENT	CAS NUMBER	CARCINOGEN*
01	ETHYL BENZENE	1 - <5	100-41-4	1
02	1-METHOXY-2-PROPYL ACETATE	1 - <5	108-65-6	
03	METHYL (N-AMYL) KETONE	1 - <5	110-43-0	
04	N-BUTYL ACETATE	5 - <10	123-86-4	
05	XYLENES	10- <20	1330-20-7	
06	TALC	10- <20	14807-96-6	
07	AROMATIC NAPHTHA	1 - <5	64742-95-6	
08	BARIUM SULFATE	20- <30	7727-43-7	

* Carcinogens: O = OSHA; A = ACGIH; N = NTP; I = IARC

SARA TITLE III & CERCLA CLASSIFICATIONS

REF	SARA 302 RQ (LBS)	SARA 302 TPQ (LBS)	SARA 313	SARA 311/312 AC	CH	FL	PR	RE
01	1000 lbs	NOT ESTAB	Y	Y	Y	Y	N	N
02	NOT ESTAB	NOT ESTAB	N	Y	N	Y	N	N
03	NOT ESTAB	NOT ESTAB	N	Y	N	Y	N	N
04	5000 lbs	NOT ESTAB	N	Y	N	Y	N	N
05	100 lbs	NOT ESTAB	Y	Y	N	Y	N	N
06	NOT ESTAB	NOT ESTAB	N	N	N	N	N	N
07	NOT ESTAB	NOT ESTAB	N	Y	N	Y	N	N
08	NOT ESTAB	NOT ESTAB	N	N	N	N	N	N

SARA 311/312 CATEGORIES FOR THIS PRODUCT: ACUTE = Y, CHRONIC = Y, FLAMMABILITY = Y, PRESSURE = N, REACTIVITY = N

OCCUPATIONAL EXPOSURE LIMITS HAVE BEEN ESTABLISHED FOR THE FOLLOWING MATERIALS:

REF	ACGIH TLV-TWA	ACGIH TLV-STEL	U.S. OSHA PEL-TWA	U.S. OSHA PEL-STEL
01	100 ppm	125 ppm	100 ppm	125 ppm
02	NOT ESTAB	NOT ESTAB	NOT ESTAB	NOT ESTAB
03	50 ppm	NOT ESTAB	100 ppm	NOT ESTAB
04	150 PPM	200 ppm	150 ppm	200 ppm
05	100 ppm	150 ppm	100 ppm	150 ppm
06	R- 2 mg/m3	NOT ESTAB	R- 2 mg/m3	NOT ESTAB
07	NOT ESTAB	NOT ESTAB	NOT ESTAB	NOT ESTAB
08	10 mg/m3	NOT ESTAB	R- 5 mg/m3	NOT ESTAB

(C- Ceiling Limit; S- Potential Skin Absorption; R- Respirable Dust)

REF ACGIH TLV - BASIS - CRITICAL EFFECT(S)

REF	BASIS
01	irritation; CNS
02	NOT ESTAB
03	irritation
04	irritation
05	irritation
06	lung
07	NOT ESTAB
08	pneumoconiosis(baritosis)

(ACGIH TLV BASIS - CRITICAL EFFECT(S): CNS-CENTRAL NERVOUS SYSTEM; CVS-CARDIOVASCULAR SYSTEM; CWP-COAL WORKER'S PNEUMOCONIOSIS; GI-GASTROINTESTINAL) (NOT ESTAB. = NOT ESTABLISHED = NOT APPLICABLE) (NOT ESTAB. = NOT ESTABLISHED = NOT APPLICABLE)

PRODUCT STATUS RELATIVE TO THE U.S. EPA TOXIC SUBSTANCES CONTROL ACT

All chemical substances in this product are listed on the U.S. TSCA Inventory or are otherwise exempt from TSCA Inventory reporting requirements.

SECTION 3 - HAZARDS IDENTIFICATION

EFFECTS OF OVEREXPOSURE FROM:

- **INGESTION:** Harmful if swallowed.
- **EYE CONTACT:** Causes severe eye irritation.
- **SKIN CONTACT:** May cause moderate skin irritation. May be absorbed through the skin.
- **INHALATION:** Vapor and/or spray mist may be harmful if inhaled. Vapor irritates eyes, nose, and throat. Repeated exposure to high vapor concentrations may cause irritation of the respiratory system and permanent brain and nervous system damage.
- **CHRONIC OVEREXPOSURE:** Avoid long-term and repeated contact. This product contains talc. In a lifetime inhalation study female rats exposed to an elevated respirable concentration (9 times the Permissible Exposure Limit) of cosmetic grade talc developed lung cancer. To date, no U.S. regulatory agency has classified talc as a carcinogen based on this data. Ethylbenzene has been reported by NTP to cause cancer in laboratory animals following a chronic (2 year) inhalation exposure. Carcinogenicity was found in the kidneys of rats and the lung and liver of mice at the 750 ppm dose level. The No Observed Effect Level (NOEL) was 75 ppm. The International Agency for Research on Cancer (IARC) has evaluated ethylbenzene and classified it as a possible human carcinogen (Group 2B) based on sufficient evidence for carcinogenicity in experimental animals, but inadequate evidence for cancer in exposed humans. High exposures to xylenes in some animal studies have been reported to cause health effects on the developing embryo and fetus. These effects were often at levels toxic to the mother. The significance of these findings to humans has not been determined.

SIGNS AND SYMPTOMS OF OVEREXPOSURE: Eye watering, headaches, nausea, dizziness, and loss of coordination are indications that solvent levels are too high. Intentional misuse by deliberately concentrating and inhaling the contents can be harmful or fatal. Redness, itching, burning sensation and visual disturbances may indicate excessive eye contact. Dryness, itching, cracking, burning, redness, and swelling are conditions associated with excessive skin contact.

MEDICAL CONDITIONS AGGRAVATED BY EXPOSURE: Not applicable.

SECTION 4 - FIRST AID MEASURES

- **IMPORTANT FIRST AID INFORMATION:** If ingestion, any type of overexposure or symptoms of overexposure occur during or following the use of this product, contact a poison control center, emergency room or physician immediately; have Material Safety Data Sheet information available.
- **INGESTION:** Gently wipe or rinse the inside of the mouth with water. Sips of water may be given. Never give anything by mouth to an unconscious person. Contact a poison

control center, emergency room or physician right away as further treatment may be necessary.

▸EYE CONTACT: Remove contact lens and pour a gentle stream of warm water through the affected eye for at least 15 minutes. If irritation persists, contact a poison control center, emergency room, or physician as further treatment may be necessary.

▸SKIN CONTACT: Run a gentle stream of water over the affected area for 15 minutes. A mild soap may be used if available. If any symptoms persist, contact a poison control center, emergency room, or physician as further treatment may be necessary.

▸INHALATION: Remove from area to fresh air. If symptomatic, contact a poison control center, emergency room or physician for treatment information.

SECTION 5 - FIRE FIGHTING MEASURES

▸FLASHPOINT: 76 Degrees F (24 Degrees C) (PENSKY-MARTENS CLOSED CUP)

▸FLAMMABLE LIMITS: Lower explosion limit (LEL): 1.4

▸Upper explosion limit (UEL): Not available

▸EXTINGUISHING MEDIA: Use National Fire Protection Association (NFPA) Class B extinguishers (carbon dioxide, dry chemical, or universal aqueous film forming foam) designed to extinguish NFPA Class IC flammable liquid fires.

▸UNUSUAL FIRE AND EXPLOSION HAZARDS: Keep this product away from heat, sparks, flame, and other sources of ignition (i.e., pilot lights, electric motors, static electricity). Invisible vapors can travel to a source of ignition and flash back. Do not smoke while using this product. Keep containers tightly closed when not in use. Closed containers may explode when overheated. Do not apply to hot surfaces. Toxic gases may form when this product comes in contact with extreme heat.

▸SPECIAL FIRE FIGHTING PROCEDURES: Water spray may be ineffective. Water spray may be used to cool closed containers to prevent pressure build-up and possible autoignition or explosion when exposed to extreme heat. If water is used, fog nozzles are preferable. Fire-fighters should wear self-contained breathing apparatus and full protective clothing.

SECTION 6 - ACCIDENTAL RELEASE MEASURES

▸STEPS TO BE TAKEN IN CASE MATERIAL IS RELEASED OR SPILLED: Provide maximum ventilation. Only personnel equipped with proper respiratory, skin, and eye protection should be permitted in the area. Remove all sources of ignition. Take up spilled material with sand, vermiculite, or other noncombustible absorbent material and place in clean, empty containers for disposal. Only the spilled material and the absorbent should be placed in this container.

▸WASTE DISPOSAL METHOD: Waste material must be disposed of in accordance with federal, state, provincial, and local environmental control regulations. Empty containers should be recycled or disposed of through an approved waste management facility.

SECTION 7 - HANDLING AND STORAGE

▸HANDLING AND STORAGE PRECAUTIONS: Do not store above 120 degrees F.(48 degrees C.). Store large quantities in buildings designed and protected for storage of NFPA Class IC flammable liquids.

▸OTHER PRECAUTIONS: Vapors may collect in low areas. If this material is part of a multiple component system, read the Material Safety Data Sheet(s) for the other component or components before blending as the resulting mixture may have the hazards of all of its parts. Containers should be grounded when pouring. Avoid free fall of liquids in excess of a few inches.

SECTION 8 - EXPOSURE CONTROLS AND PERSONAL PROTECTION

PERSONAL PROTECTIVE EQUIPMENT FOR:

▸EYE PROTECTION: Wear chemical-type splash goggles or full face shield when possibility exists for eye contact due to splashing or spraying liquid, airborne particles, or vapors.

▸SKIN PROTECTION: Wear protective clothing to prevent skin contact. Apron and gloves should be constructed of: neoprene rubber or nitrile rubber. No specific permeation/degradation testing have been done on protective clothing for this product. Recommendations for skin protection are based on infrequent contact with this product. For frequent contact or total immersion, contact a manufacturer of protective clothing for appropriate chemical impervious equipment.

▸RESPIRATORY PROTECTION: Overexposure to vapors may be prevented by ensuring proper ventilation controls, vapor exhaust or fresh air entry. A NIOSH- approved air purifying respirator with the appropriate chemical cartridges or a positive-pressure, air-supplied respirator may also reduce exposure. Read the respirator manufacturer's instructions and literature carefully to determine the type of airborne contaminants against which the respirator is effective, its limitations, and how it is to be properly fitted and used.

▸OTHER EQUIPMENT: Clean contaminated clothing and shoes.

VENTILATION REQUIREMENTS: Provide general dilution or local exhaust ventilation in volume and pattern to keep the concentration of ingredients listed in Section 2 below the lowest suggested exposure limits, the LEL below the stated limit, and to remove decomposition products during welding or flame cutting.

SECTION 9 - PHYSICAL AND CHEMICAL PROPERTIES

(FORMULA VALUES, NOT SALES SPECIFICATIONS)

BOILING RANGE: 172- 351Degrees F	SOLUBILITY IN WATER: 1.7 %
VAPOR PRESSURE: 8.1 mmHg	WEIGHT/GALLON (LBS): 12.47 (U.S.)
VAPOR DENSITY: Heavier than air	pH: Not determined
% VOLATILE/VOLUME: 58.230	% SOLIDS BY WEIGHT: 66.08
SPECIFIC GRAVITY: 1.496	EVAPORATION RATE(BuOAc=100): 85

ODOR/APPEARANCE: Viscous liquid with an odor characteristic of the solvents listed in Section 2.

SECTION 10 - STABILITY AND REACTIVITY

▸This product is normally stable and will not undergo hazardous reactions.

▸INCOMPATIBILITY (MATERIALS AND CONDITIONS TO AVOID): Avoid contact with strong alkalies, strong mineral acids, or strong oxidizing agents.

▸HAZARDOUS DECOMPOSITION PRODUCTS: May produce the following hazardous decomposition products when exposed to extreme heat: carbon monoxide ; carbon dioxide ; oxides of barium ; oxides of sulfur ; lower molecular weight polymer fractions; Extreme heat includes, but is not limited to, flame cutting, brazing, and welding.

Hazardous Materials Identification System (HMIS) and National Fire Protection Association (NFPA) Ratings:

HMIS Rating		NFPA Rating	
HEALTH	2*	HEALTH	2
FLAMMABILITY	3	FLAMMABILITY	3
REACTIVITY	0	INSTABILITY	0

Rating System:0 = Minimal, 1 = Slight, 2 = Moderate, 3 = Serious, 4 = Severe, * = Chronic Effects.

Safe handling of this product requires that all of the information on the MSDS be evaluated for specific work environments and conditions of use.

THIS IS THE END OF THE MSDS FOR: K93 (00194584.002K93 05/02/01)

MATERIAL SAFETY DATA SHEET
COATINGS AND RESINS GROUP
PPG Industries, Inc.

SECTION 1 - CHEMICAL, PRODUCT, AND COMPANY INFORMATION

PRODUCT CODE/IDENTITY: DCU2002

PRODUCT TRADE NAME: H.S. POLYURETHANE CLEAR

REVISION DATE: 09/05/00 (000) 0808

CUSTOMER PART #/NAME:

CHEMICAL FAMILY: Acrylic

EMERGENCY MEDICAL/SPILL INFO: (304) 843-1300 (U.S.)
91-800-00-214 (MEXICO)

TECHNICAL INFORMATION: (440) 572-2800

PRODUCT SAFETY/MSDS INFORMATION: 4325 ROSANNA DRIVE, P.O. BOX 9
ALLISON PARK, PA 15101
(412) 492-5555

DATE OF MSDS PREPARATION: 10-11-00

PRIMARY HAZARD WARNING

Flammable. Keep away from heat, sparks, flames, and other sources of ignition. Do not smoke. Extinguish all flames and pilot lights. Turn off stoves, heaters, electrical motors, and other sources of ignition during use and until all vapors/fumes are gone. Harmful if swallowed. May cause slight skin irritation. Causes eye irritation. Vapor and/or spray mist may be harmful if inhaled.

THIS MATERIAL SAFETY DATA SHEET HAS BEEN PREPARED IN ACCORDANCE WITH THE OSHA HAZARD COMMUNICATION STANDARD (29 CFR 1910.1200), THE SUPPLIER NOTIFICATION REQUIREMENTS OF SARA TITLE III, SECTION 313, AND OTHER APPLICABLE RIGHT-TO-KNOW REGULATIONS.

SECTION 2 - COMPOSITION/INFORMATION ON INGREDIENTS

REF	HAZARDOUS INGREDIENTS	PERCENT	CAS NUMBER	CARCINOGEN*
01	ETHYL BENZENE	0.1- <1	100-41-4	
02	STYRENE MONOMER	0.1- <1	100-42-5	I
03	METHYL (N-AMYL) KETONE	10- <20	110-43-0	
04	XYLENES	30- <40	1330-20-7	
05	BENZOTRIAZOLE UV ABSORBANT	1 - <5	25973-55-1	

* Carcinogens: O = OSHA; A = ACGIH; N = NTP; I = IARC

SARA TITLE III & CERCLA CLASSIFICATIONS

REF	SARA 302 RQ (LBS)	SARA 302 TPQ (LBS)	SARA 313	SARA 311/312 AC	CH	FL	PR	RE
01	1000	NOT ESTAB	Y	Y	Y	Y	N	N
02	1000	NOT ESTAB	Y	Y	Y	Y	N	Y
03	NOT ESTAB	NOT ESTAB	N	Y	N	Y	N	N
04	100	NOT ESTAB	Y	Y	N	Y	N	N
05	NOT ESTAB	NOT ESTAB	N	N	Y	N	N	N

SARA 311/312 CATEGORIES FOR THIS PRODUCT: ACUTE = Y, CHRONIC = Y, FLAMMABILITY = Y, PRESSURE = N, REACTIVITY = N

OCCUPATIONAL EXPOSURE LIMITS HAVE BEEN ESTABLISHED FOR THE FOLLOWING MATERIALS:

REF	ACGIH TLV-TWA	ACGIH TLV-STEL	U.S. OSHA PEL-TWA	U.S. OSHA PEL-STEL
01	100 ppm	125 ppm	100 ppm	125 ppm
02	20 ppm	40 ppm	50 ppm	100 ppm
03	50 ppm	NOT ESTAB	100 ppm	NOT ESTAB
04	100 ppm	150 ppm	100 ppm	150 ppm
05	NOT ESTAB	NOT ESTAB	NOT ESTAB	NOT ESTAB

(C- Ceiling Limit; S- Potential Skin Absorption; R- Respirable Dust) (NOT ESTAB. = NOT ESTABLISHED = NOT APPLICABLE)

PRODUCT STATUS RELATIVE TO THE U.S. EPA TOXIC SUBSTANCES CONTROL ACT

All chemical substances in this product are listed on the U.S. TSCA Inventory or are otherwise exempt from TSCA Inventory reporting requirements.

SECTION 3 - HAZARDS IDENTIFICATION

EFFECTS OF OVEREXPOSURE FROM:

- **INGESTION:** Harmful if swallowed.
- **EYE CONTACT:** Causes eye irritation.
- **SKIN CONTACT:** May cause slight skin irritation.
- **INHALATION:** Vapor and/or spray mist may be harmful if inhaled. Repeated exposure to high vapor concentrations may cause irritation of the respiratory system and permanent brain and nervous system damage.
- **CHRONIC OVEREXPOSURE:** Avoid long-term and repeated contact. This product contains a benzotriazole-based light stabilizer. Subchronic feeding studies in laboratory animals, at high dose levels, resulted in adverse kidney, liver and possibly reproductive organ effects. No evidence of these effects has been noted in humans. This product contains styrene which has been classified by the International Agency for Research on Cancer (IARC) as a Class 2B carcinogen. The classification is based on data obtained by exposing laboratory animals to styrene oxide. The evidence that styrene is a human carcinogen is inadequate. Ethylbenzene has been reported by NTP to cause cancer in laboratory animals following a chronic (2 year) inhalation exposure. Carcinogenicity was found in the kidneys of rats and the lung and liver of mice at the 750 ppm dose level. The No Observed Effect Level (NOEL) was 75 ppm. The International Agency for Research on Cancer (IARC) has evaluated ethylbenzene and classified it as a possible human carcinogen (Group 2B) based on sufficient evidence for carcinogenicity in experimental animals, but inadequate evidence for cancer in exposed humans. High exposures to xylenes in some animal studies have been reported to cause health effects on the developing embryo and fetus. These effects were often at levels toxic to the mother. The significance of these findings to humans has not been determined.

SIGNS AND SYMPTOMS OF OVEREXPOSURE: Eye watering, headaches, nausea, dizziness, and loss of coordination are indications that solvent levels are too high. Intentional misuse by deliberately concentrating and inhaling the contents can be harmful or fatal. Redness, itching, burning sensation and visual disturbances may indicate excessive eye contact. Dryness, itching, cracking, burning, redness, and swelling are conditions associated with excessive skin contact.

MEDICAL CONDITIONS AGGRAVATED BY EXPOSURE: Not applicable.

SECTION 4 - FIRST AID MEASURES

- **INGESTION:** If swallowed, do not induce vomiting. Gently wipe out inside mouth to remove any residual material.
- **EYE CONTACT:** In case of eye contact, remove contact lenses and flush eyes immediately with a gentle stream of luke warm water for at least 15 minutes.
- **SKIN CONTACT:** In case of skin contact, flush immediately with plenty of water for at least 15 minutes followed by washing with soap and water.
- **INHALATION:** If affected by inhalation of vapor or spray mist, remove to fresh air. Apply artificial respiration and other support measures as required.
- **OTHER:** If ingestion, any type of overexposure or symptoms of overexposure occur during or following the use of this product, contact a poison control center, emergency room or physician immediately; have Material Safety Data Sheet information available.

SECTION 5 - FIRE FIGHTING MEASURES

- **FLASHPOINT:** 79 Degrees F (26 Degrees C) (PENSKY-MARTENS CLOSED CUP)
- **FLAMMABLE LIMITS: Lower explosion limit (LEL):** 1.1
- **Upper explosion limit (UEL):** Not available
- **EXTINGUISHING MEDIA:** Use National Fire Protection Association (NFPA) Class B extinguishers (carbon dioxide, dry chemical, or universal aqueous film forming foam) designed to extinguish NFPA Class IC flammable liquid fires.
- **UNUSUAL FIRE AND EXPLOSION HAZARDS:** Keep this product away from heat, sparks, flame, and other sources of ignition (i.e., pilot lights, electric motors, static electricity). Invisible vapors can travel to a source of ignition and flash back. Do not smoke while using this product. Keep containers tightly closed when not in use. Closed containers may explode when overheated. Do not apply to hot surfaces. Toxic gases may form when the product comes in contact with extreme heat.
- **SPECIAL FIRE FIGHTING PROCEDURES:** Water spray may be ineffective. Water spray may be used to cool closed containers to prevent pressure build-up and possible autoignition or explosion when exposed to extreme heat. If water is used, fog nozzles are preferable. Fire-fighters should wear self-contained breathing apparatus and full protective clothing.

SECTION 6 - ACCIDENTAL RELEASE MEASURES

- **STEPS TO BE TAKEN IN CASE MATERIAL IS RELEASED OR SPILLED:** Provide maximum ventilation. Only personnel equipped with proper respiratory, skin, and eye protection should be permitted in the area. Remove all sources of ignition. Take up spilled material with sand, vermiculite, or other noncombustible absorbent material and place in clean, empty containers for disposal. Only the spilled material and the absorbent should be placed in this container.

▸WASTE DISPOSAL METHOD: Waste material must be disposed of in accordance with federal, state, provincial, and local environmental control regulations. Empty containers should be recycled or disposed of through an approved waste management facility

SECTION 7 - HANDLING AND STORAGE

▸HANDLING AND STORAGE PRECAUTIONS: Do not store above 120 degrees F.(48 degrees C.). Store large quantities in buildings designed and protected for storage of NFPA Class IC flammable liquids

▸OTHER PRECAUTIONS: Vapors may collect in low areas. If this material is part of a multiple component system, read the Material Safety Data Sheet(s) for the other component or components before blending as the resulting mixture may have the hazards of all of its parts. Containers should be grounded when pouring. Avoid free fall of liquids in excess of a few inches.

SECTION 8 - EXPOSURE CONTROLS AND PERSONAL PROTECTION

PERSONAL PROTECTIVE EQUIPMENT FOR:

▸EYE PROTECTION: Wear chemical-type splash goggles when possibility exists for eye contact due to splashing or spraying liquid, airborne particles, or vapors.

▸SKIN PROTECTION: Wear protective clothing. Gloves should be constructed of. nitrile rubber. No specific permeation/degradation testing have been done on protective clothing for this product. Recommendations for skin protection are based on infrequent contact with this product. For frequent contact or total immersion, contact a manufacturer of protective clothing for appropriate chemical impervious equipment.

▸RESPIRATORY PROTECTION: Overexposure to vapors may be prevented by ensuring proper ventilation controls, vapor exhaust or fresh air entry. A NIOSH- approved air purifying respirator with the appropriate chemical cartridges or a positive-pressure, air-supplied respirator may also reduce exposure. Read the respirator manufacturer's instructions and literature carefully to determine the type of airborne contaminants against which the respirator is effective, its limitations, and how it is to be properly fitted and used.

▸OTHER EQUIPMENT: Clean contaminated clothing and shoes.

VENTILATION REQUIREMENTS: Provide general dilution or local exhaust ventilation in volume and pattern to keep the concentration of ingredients listed in Section 2 below the lowest suggested exposure limits, the LEL below the stated limit, and to remove decomposition products during welding or flame cutting.

SECTION 9 - PHYSICAL AND CHEMICAL PROPERTIES

(FORMULA VALUES, NOT SALES SPECIFICATIONS)

BOILING RANGE: 214- 410Degrees F	SOLUBILITY IN WATER: .1 %
VAPOR PRESSURE: 4.2 mmHg	WEIGHT/GALLON (LBS): 7.95 (U.S.)
VAPOR DENSITY: Heavier than air	pH: Not determined
% VOLATILE/VOLUME: 56.680	% SOLIDS BY WEIGHT: 49.21
SPECIFIC GRAVITY: .954	EVAPORATION RATE(BuOAc=100): 56

ODOR/APPEARANCE: Viscous liquid with an odor characteristic of the solvents listed in Section 2.

SECTION 10 - STABILITY AND REACTIVITY

▸This product is normally stable and will not undergo hazardous reactions.

▸INCOMPATIBILITY (MATERIALS AND CONDITIONS TO AVOID): Avoid contact with strong alkalies, strong mineral acids, or strong oxidizing agents.

▸HAZARDOUS DECOMPOSITION PRODUCTS: May produce the following hazardous decomposition products when exposed to extreme heat: carbon monoxide ; carbon dioxide ; lower molecular weight polymer fractions; Extreme heat includes, but is not limited to, flame cutting, brazing, and welding.

Hazardous Materials Identification System (HMIS) and National Fire Protection Association (NFPA) Ratings:

HMIS Rating		NFPA Rating	
HEALTH	1*	HEALTH	1
FLAMMABILITY	3	FLAMMABILITY	3
REACTIVITY	0	INSTABILITY	0

Rating System:0 = Minimal, 1 = Slight, 2 = Moderate, 3 = Serious, 4 = Severe, * = Chronic Effects.

Safe handling of this product requires that all of the information on the MSDS be evaluated for specific work environments and conditions of use.

THIS IS THE END OF THE MSDS FOR: DCU2002 (00184870.002 DCU2002 10/11/00)

MATERIAL SAFETY DATA SHEET
COATINGS AND RESINS GROUP
PPG Industries, Inc.

SECTION 1 - CHEMICAL PRODUCT AND COMPANY INFORMATION

PRODUCT CODE/IDENTITY:	DCU2082
PRODUCT TRADE NAME:	CLEAR
REVISION DATE:	07/18/00 (000) 0803
CUSTOMER PART #/NAME:	
CHEMICAL FAMILY:	Acrylic
EMERGENCY MEDICAL/SPILL INFO:	(304) 843-1300 (U.S.) 91-800-00-214 (MEXICO)
TECHNICAL INFORMATION:	(440) 572-2800
PRODUCT SAFETY/MSDS INFORMATION:	4325 ROSANNA DRIVE, P.O. BOX 9 ALLISON PARK, PA 15101 (412) 492-5555
DATE OF MSDS PREPARATION:	10-11-00

PRIMARY HAZARD WARNING

Flammable. Keep away from heat, sparks, flames, and other sources of ignition. Do not smoke. Extinguish all flames and pilot lights. Turn off stoves, heaters, electrical motors, and other sources of ignition during use and until all vapors/odors are gone. Harmful if swallowed. May cause moderate skin irritation. Causes eye irritation. Vapor and/or spray mist may be harmful if inhaled. Vapor irritates eyes, nose, and throat.

THIS MATERIAL SAFETY DATA SHEET HAS BEEN PREPARED IN ACCORDANCE WITH THE OSHA HAZARD COMMUNICATION STANDARD (29 CFR 1910.1200), THE SUPPLIER NOTIFICATION REQUIREMENTS OF SARA TITLE III, SECTION 313, AND OTHER APPLICABLE RIGHT-TO-KNOW REGULATIONS.

SECTION 2 - COMPOSITION/INFORMATION ON INGREDIENTS

REF	HAZARDOUS INGREDIENTS	PERCENT	CAS NUMBER	CARCINOGEN*
01	METHYL ISOBUTYL KETONE	10- <20	108-10-1	
02	TOLUENE	5 - <10	108-88-3	
03	METHYL (N-AMYL) KETONE	10- <20	110-43-0	
04	XYLENES	10- <20	1330-20-7	
05	ACETONE	1 - <5	67-64-1	
06	V.M. AND P. NAPHTHA	1 - <5	8032-32-4	

* Carcinogens: O = OSHA; A = ACGIH; N = NTP; I = IARC

SARA TITLE III & CERCLA CLASSIFICATIONS

REF	SARA 302 RQ (LBS)	SARA 302 TPQ (LBS)	SARA 313	SARA 311/312 AC	CH	FL	PR	RE
01	5000	NOT ESTAB	Y	Y	N	Y	N	N
02	1000	NOT ESTAB	Y	Y	N	Y	N	N
03	NOT ESTAB	NOT ESTAB	N	Y	N	Y	N	N
04	100	NOT ESTAB	Y	Y	N	Y	N	N
05	5000	NOT ESTAB	N	Y	N	Y	N	N
06	NOT ESTAB	NOT ESTAB	N	Y	N	Y	N	N

SARA 311/312 CATEGORIES FOR THIS PRODUCT: ACUTE = Y, CHRONIC = N, FLAMMABILITY = Y, PRESSURE = N, REACTIVITY = N

OCCUPATIONAL EXPOSURE LIMITS HAVE BEEN ESTABLISHED FOR THE FOLLOWING MATERIALS:

REF	ACGIH TLV-TWA	ACGIH TLV-STEL	U.S. OSHA PEL-TWA	U.S. OSHA PEL-STEL
01	50 ppm	75 ppm	50 ppm	75 ppm
02	S- 50 ppm	NOT ESTAB	100 ppm	150 ppm
03	50 ppm	NOT ESTAB	100 ppm	NOT ESTAB
04	100 ppm	150 ppm	100 ppm	150 ppm
05	500 ppm	750 ppm	750 ppm	1000 ppm
06	300 ppm	NOT ESTAB	300 ppm	400 ppm

(C- Ceiling Limit; S- Potential Skin Absorption; R- Respirable Dust) (NOT ESTAB. = NOT ESTABLISHED = NOT APPLICABLE)

PRODUCT STATUS RELATIVE TO THE U.S. EPA TOXIC SUBSTANCES CONTROL ACT

All chemical substances in this product are listed on the U.S. TSCA Inventory or are otherwise exempt from TSCA Inventory reporting requirements.

SECTION 3 - HAZARDS IDENTIFICATION

EFFECTS OF OVEREXPOSURE FROM:

- **INGESTION:** Harmful if swallowed.
- **EYE CONTACT:** Causes eye irritation.
- **SKIN CONTACT:** May cause moderate skin irritation.
- **INHALATION:** Vapor and/or spray mist may be harmful if inhaled. Vapor irritates eyes, nose, and throat. Repeated exposure to high vapor concentrations may cause irritation of the respiratory system and permanent brain and nervous system damage.
- **CHRONIC OVEREXPOSURE:** Avoid long-term and repeated contact. This product contains a substituted benzotriazole. Products with similar structure have been shown to produce liver, kidney, and reproductive effects in animals when administered orally. No evidence of these effects has been found in humans. This product contains toluene. Toluene inhalation in animals (greater than 1500 ppm) and intentional inhalation of toluene-containing products by humans (e.g. glue) has caused adverse fetal development effects. High exposures to xylenes in some animal studies have been reported to cause health effects on the developing embryo and fetus. These effects were often at levels toxic to the mother. The significance of these findings to humans has not been determined.

SIGNS AND SYMPTOMS OF OVEREXPOSURE: Eye watering, headaches, nausea, dizziness, and loss of coordination are indications that solvent levels are too high. Intentional misuse by deliberately concentrating and inhaling the contents can be harmful or fatal. Redness, itching, burning sensation and visual disturbances may indicate excessive eye contact. Dryness, itching, cracking, burning, redness, and swelling are conditions associated with excessive skin contact.

MEDICAL CONDITIONS AGGRAVATED BY EXPOSURE: Not applicable.

WARNING: This product contains a chemical known to the State of California to cause birth defects or other reproductive harm.

SECTION 4 - FIRST AID MEASURES

- **INGESTION:** If swallowed, do not induce vomiting. Gently wipe out inside mouth to remove any residual material.
- **EYE CONTACT:** In case of eye contact, remove contact lenses and flush eyes immediately with a gentle stream of luke warm water for at least 15 minutes.
- **SKIN CONTACT:** In case of skin contact, flush immediately with plenty of water for at least 15 minutes followed by washing with soap and water.
- **INHALATION:** If affected by inhalation of vapor or spray mist, remove to fresh air. Apply artificial respiration and other support measures as required.
- **OTHER:** If ingestion, any type of overexposure or symptoms of overexposure occur during or following the use of this product, contact a poison control center, emergency room or physician immediately; have Material Safety Data Sheet information available.

SECTION 5 - FIRE FIGHTING MEASURES

- **FLASHPOINT:** 48 Degrees F (9 Degrees C) (PENSKY-MARTENS CLOSED CUP)
- **FLAMMABLE LIMITS:** Lower explosion limit (LEL): 1.5
- **Upper explosion limit (UEL):** Not available
- **EXTINGUISHING MEDIA:** Use National Fire Protection Association (NFPA) Class B extinguishers (carbon dioxide, dry chemical, or universal aqueous film forming foam) designed to extinguish NFPA Class IB flammable liquid fires.
- **UNUSUAL FIRE AND EXPLOSION HAZARDS:** Keep this product away from heat, sparks, flame, and other sources of ignition (i.e., pilot lights, electric motors, static electricity). Invisible vapors can travel to a source of ignition and flash back. Do not smoke while using this product. Keep containers tightly closed when not in use. Closed containers may explode when overheated. Do not apply to hot surfaces. Toxic gases may form when this product comes in contact with extreme heat.
- **SPECIAL FIRE FIGHTING PROCEDURES:** Water spray may be ineffective. Water spray may be used to cool closed containers to prevent pressure build-up and possible autoignition or explosion when exposed to extreme heat. If water is used, fog nozzles are preferable. Fire-fighters should wear self-contained breathing apparatus and full protective clothing.

SECTION 6 - ACCIDENTAL RELEASE MEASURES

- **STEPS TO BE TAKEN IN CASE MATERIAL IS RELEASED OR SPILLED:** Provide maximum ventilation. Only personnel equipped with proper respiratory, skin, and eye protection should be permitted in the area. Remove all sources of ignition. Take up spilled material with sand, vermiculite, or other noncombustible absorbent material and place in clean, empty containers for disposal. Only the spilled material and the absorbant should be placed in this container.

▸WASTE DISPOSAL METHOD: Waste material must be disposed of in accordance with federal, state, provincial, and local environmental control regulations. Empty containers should be recycled or disposed of through an approved waste management facility.

SECTION 7 - HANDLING AND STORAGE

▸HANDLING AND STORAGE PRECAUTIONS: Do not store above 120 degrees F.(48 degrees C.). Store large quantities in buildings designed and protected for storage of NFPA Class IB flammable liquids.

▸OTHER PRECAUTIONS: Vapors may collect in low areas. If this material is part of a multiple component system, read the Material Safety Data Sheet(s) for the other component or components before blending as the resulting mixture may have the hazards of all of its parts. Containers should be grounded when pouring. Avoid free fall of liquids in excess of a few inches.

SECTION 8 - EXPOSURE CONTROLS AND PERSONAL PROTECTION

PERSONAL PROTECTIVE EQUIPMENT FOR:

▸EYE PROTECTION: Wear chemical-type splash goggles when possibility exists for eye contact due to splashing or spraying liquid, airborne particles, or vapors.

▸SKIN PROTECTION: Wear protective clothing to prevent skin contact. Apron and gloves should be constructed of: nitrile rubber. No specific permeation/degradation testing have been done on protective clothing for this product. Recommendations for skin protection are based on infrequent contact with this product. For frequent contact or total immersion, contact a manufacturer of protective clothing for appropriate chemical impervious equipment.

▸RESPIRATORY PROTECTION: Overexposure to vapors may be prevented by ensuring proper ventilation controls, vapor exhaust or fresh air entry. A NIOSH- approved air purifying respirator with the appropriate chemical cartridge or a positive-pressure, air-supplied respirator may also reduce exposure. Read the respirator manufacturer's instructions and literature carefully to determine the type of airborne contaminants against which the respirator is effective, its limitations, and how it is to be properly fitted and used.

▸OTHER EQUIPMENT: Clean contaminated clothing and shoes.

VENTILATION REQUIREMENTS: Provide general dilution or local exhaust ventilation in volume and pattern to keep the concentration of ingredients listed in Section 2 below the lowest suggested exposure limits, the LEL below the stated limit, and to remove decomposition products during welding or flame cutting.

SECTION 9 - PHYSICAL AND CHEMICAL PROPERTIES

[FORMULA VALUES, NOT SALES SPECIFICATIONS]

BOILING RANGE: 133- 469Degrees F	SOLUBILITY IN WATER: 2.0 %
VAPOR PRESSURE: 19.7 mmHg	WEIGHT/GALLON (LBS): 7.88 (U.S.)
VAPOR DENSITY: Heavier than air	pH: Not determined
% VOLATILE/VOLUME: 60.180	% SOLIDS BY WEIGHT: 47.36
SPECIFIC GRAVITY: .946	EVAPORATION RATE(BuOAc=100): 144

ODOR/APPEARANCE: Viscous liquid with an odor characteristic of the solvents listed in Section 2

SECTION 10 - STABILITY AND REACTIVITY

▸This product is normally stable and will not undergo hazardous reactions.

▸INCOMPATIBILITY (MATERIALS AND CONDITIONS TO AVOID): Avoid contact with strong alkalies, strong mineral acids, or strong oxidizing agents.

▸HAZARDOUS DECOMPOSITION PRODUCTS: May produce the following hazardous decomposition products when exposed to extreme heat: carbon monoxide ; carbon dioxide ; lower molecular weight polymer fractions; Extreme heat includes, but is not limited to, flame cutting, brazing, and welding.

Hazardous Materials Identification System (HMIS) and National Fire Protection Association (NFPA) Ratings:

HMIS Rating		NFPA Rating	
HEALTH	2	HEALTH	2
FLAMMABILITY	3	FLAMMABILITY	3
REACTIVITY	0	INSTABILITY	0

Rating System:0 = Minimal, 1 = Slight, 2 = Moderate, 3 = Serious, 4 = Severe, * = Chronic Effects

Safe handling of this product requires that all of the information on the MSDS be evaluated for specific work environments and conditions of use.

THIS IS THE END OF THE MSDS FOR: *DCU2082 I00184876 002*DCU2082 10/11/00I

MATERIAL SAFETY DATA SHEET

05-572-WB
07 00

DATE OF PREPARATION
Jun 11, 2011

SECTION 1 — PRODUCT AND COMPANY IDENTIFICATION

PRODUCT NUMBER
05-572-WB
PRODUCT NAME
PURECOAT Low Odor Acrylic Semi-Gloss, White Base
MANUFACTURER'S NAME
COLUMBIA PAINT & COATINGS
N112 Haven, P.O. Box 4569
Spokane, WA 99202-4569

Telephone Numbers and Websites

Product Information	(509) 535-6311 www.columbiapaint.com
Regulatory Information	(216) 566-2902
Medical Emergency	(216) 566-2917
Transportation Emergency*	(800) 424-9300
*for Chemical Emergency ONLY (spill, leak, fire, exposure, or accident)	

SECTION 2 — COMPOSITION/INFORMATION ON INGREDIENTS

% by Weight	CAS Number	Ingredient	Units	Vapor Pressure
1	1332-58-7	Kaolin		
		ACGIH TLV	2 mg/m3 as Resp. Dust	
		OSHA PEL	10 mg/m3 Total Dust	
		OSHA PEL	5 mg/m3 Respirable Fraction	
21	13463-67-7	Titanium Dioxide		
		ACGIH TLV	10 mg/m3 as Dust	
		OSHA PEL	10 mg/m3 Total Dust	
		OSHA PEL	5 mg/m3 Respirable Fraction	

SECTION 3 — HAZARDS IDENTIFICATION

ROUTES OF EXPOSURE
INHALATION of vapor or spray mist.
EYE or SKIN contact with the product, vapor or spray mist
EFFECTS OF OVEREXPOSURE
EYES: Irritation
SKIN: Prolonged or repeated exposure may cause irritation
INHALATION: Irritation of the upper respiratory system

HMIS Codes

Health	1*
Flammability	0
Reactivity	0

SIGNS AND SYMPTOMS OF OVEREXPOSURE
Redness and itching or burning sensation may indicate eye or excessive skin exposure
MEDICAL CONDITIONS AGGRAVATED BY EXPOSURE
None generally recognized.
CANCER INFORMATION
For complete discussion of toxicology data refer to Section 11.

SECTION 4 — FIRST AID MEASURES

EYES: Flush eyes with large amounts of water for 15 minutes. Get medical attention.
SKIN: Wash affected area thoroughly with soap and water
INHALATION: If affected, remove from exposure. Restore breathing. Keep warm and quiet.
INGESTION: Do not induce vomiting. Get medical attention immediately

SECTION 5 — FIRE FIGHTING MEASURES

05-572-WB

FLASH POINT	LEL	UEL	FLAMMABILITY CLASSIFICATION
Not Applicable	N.A.	N.A.	Not Applicable

EXTINGUISHING MEDIA

Carbon Dioxide, Dry Chemical, Alcohol Foam

UNUSUAL FIRE AND EXPLOSION HAZARDS

Closed containers may explode (due to the build-up of pressure) when exposed to extreme heat

During emergency conditions overexposure to decomposition products may cause a health hazard. Symptoms may not be immediately apparent. Obtain medical attention

SPECIAL FIRE FIGHTING PROCEDURES

Full protective equipment including self-contained breathing apparatus should be used

Water spray may be ineffective. If water is used, fog nozzles are preferable. Water may be used to cool closed containers to prevent pressure build-up and possible autoignition or explosion when exposed to extreme heat

SECTION 6 — ACCIDENTAL RELEASE MEASURES

STEPS TO BE TAKEN IN CASE MATERIAL IS RELEASED OR SPILLED

Remove all sources of ignition. Ventilate the area

Remove with inert absorbent

SECTION 7 — HANDLING AND STORAGE

STORAGE CATEGORY

Not Applicable

PRECAUTIONS TO BE TAKEN IN HANDLING AND STORAGE

Keep container closed when not in use. Transfer only to approved containers with complete and appropriate labeling. Do not take internally. Keep out of the reach of children

SECTION 8 — EXPOSURE CONTROLS/PERSONAL PROTECTION

PRECAUTIONS TO BE TAKEN IN USE

Use only with adequate ventilation

Avoid contact with skin and eyes. Avoid breathing vapor and spray mist.

Wash hands after using.

This coating may contain materials classified as nuisance particulates (listed "as Dust" in Section 2) which may be present at hazardous levels only during sanding or abrading of the dried film. If no specific dusts are listed in Section 2, the applicable limits for nuisance dusts are ACGIH TLV 10 mg/m3 (total dust), 3 mg/m3 (respirable fraction), OSHA PEL 15 mg/m3 (total dust), 5 mg/m3 (respirable fraction)

Removal of old paint by sanding, scraping or other means may generate dust or fumes that contain lead. Exposure to lead dust or fumes may cause brain damage or other adverse health effects, especially in children or pregnant women. Controlling exposure to lead or other hazardous substances requires the use of proper protective equipment, such as a properly fitted respirator (NIOSH approved) and proper containment and cleanup. For more information, call the National Lead Information Center at 1-800-424-LEAD (in US) or contact your local health authority

VENTILATION

Local exhaust preferable. General exhaust acceptable if the exposure to materials in Section 2 is maintained below applicable exposure limits. Refer to OSHA Standards 1910.94, 1910.107, 1910.108

RESPIRATORY PROTECTION

If personal exposure cannot be controlled below applicable limits by ventilation, wear a properly fitted organic vapor/particulate respirator approved by NIOSH/MSHA for protection against materials in Section 2.

When sanding or abrading the dried film, wear a dust/mist respirator approved by NIOSH/MSHA for dust which may be generated from this product, underlying paint, or the abrasive

PROTECTIVE GLOVES

Required for long or repeated contact

EYE PROTECTION

Wear safety spectacles with unperforated sideshields

SECTION 9 — PHYSICAL AND CHEMICAL PROPERTIES

PRODUCT WEIGHT	10.42 lb/gal	1248 g/l
SPECIFIC GRAVITY	1.25	
BOILING POINT	212 - 213 °F	100 - 100 °C
MELTING POINT	Not Available	
VOLATILE VOLUME	59%	
EVAPORATION RATE	Slower than ether	
VAPOR DENSITY	Heavier than air	
SOLUBILITY IN WATER	N.A.	
pH	8.8	

VOLATILE ORGANIC COMPOUNDS (VOC Theoretical - As Packaged)

0.02 lb/gal	3 g/l	Less Water and Federally Exempt Solvents
0.01 lb/gal	1 g/l	Emitted VOC

MATERIAL SAFETY DATA SHEET

02-752-WB
07 00

DATE OF PREPARATION
Apr 28, 2011

SECTION 1 — PRODUCT AND COMPANY IDENTIFICATION

PRODUCT NUMBER
02-752-WB
PRODUCT NAME
Professional Coatings Interior Latex Semi-Gloss Enamel, White Base
MANUFACTURER'S NAME
COLUMBIA PAINT & COATINGS
N112 Haven, P.O. Box 4569
Spokane, WA 99202-4569

Telephone Numbers and Websites

Product Information	(509) 535-6311 www.columbiapaint.com
Regulatory Information	(216) 566-2902
Medical Emergency	(216) 566-2917
Transportation Emergency*	(800) 424-9300
*for Chemical Emergency ONLY (spill, leak, fire, exposure, or accident)	

SECTION 2 — COMPOSITION/INFORMATION ON INGREDIENTS

% by Weight	CAS Number	Ingredient	Units	Vapor Pressure
1	107-21-1	Ethylene Glycol		
		ACGIH TLV	100 MG/M3 CEILING (aerosol)	0.12 mm
		OSHA PEL	50 PPM CEILING	
4	1332-58-7	Kaolin		
		ACGIH TLV	2 mg/m3 as Resp. Dust	
		OSHA PEL	10 mg/m3 Total Dust	
		OSHA PEL	5 mg/m3 Respirable Fraction	
19	13463-67-7	Titanium Dioxide		
		ACGIH TLV	10 mg/m3 as Dust	
		OSHA PEL	10 mg/m3 Total Dust	
		OSHA PEL	5 mg/m3 Respirable Fraction	

SECTION 3 — HAZARDS IDENTIFICATION

ROUTES OF EXPOSURE
INHALATION of vapor or spray mist.
EYE or SKIN contact with the product, vapor or spray mist.

HMIS Codes	
Health	2*
Flammability	0
Reactivity	0

EFFECTS OF OVEREXPOSURE
EYES: Irritation.
SKIN: Prolonged or repeated exposure may cause irritation.
INHALATION: Irritation of the upper respiratory system.

In a confined area vapors in high concentration may cause headache, nausea or dizziness.
Prolonged overexposure to hazardous ingredients in Section 2 may cause adverse chronic effects to the following organs or systems
- the liver
- the urinary system

SIGNS AND SYMPTOMS OF OVEREXPOSURE
Redness and itching or burning sensation may indicate eye or excessive skin exposure.
MEDICAL CONDITIONS AGGRAVATED BY EXPOSURE
None generally recognized
CANCER INFORMATION
For complete discussion of toxicology data refer to Section 11

SECTION 9 — PHYSICAL AND CHEMICAL PROPERTIES

PRODUCT WEIGHT	10.39 lb/gal	1245 g/l
SPECIFIC GRAVITY	1.25	
BOILING POINT	212 - 388 °F	100 - 197 °C
MELTING POINT	Not Available	
VOLATILE VOLUME	69%	
EVAPORATION RATE	Slower than ether	
VAPOR DENSITY	Heavier than air	
SOLUBILITY IN WATER	N.A	
pH	8.8	

VOLATILE ORGANIC COMPOUNDS (VOC Theoretical - As Packaged)

0.81 lb/gal	98 g/l	Less Water and Federally Exempt Solvents
0.27 lb/gal	33 g/l	Emitted VOC

SECTION 10 — STABILITY AND REACTIVITY

STABILITY — Stable

CONDITIONS TO AVOID

None known

INCOMPATIBILITY

None known

HAZARDOUS DECOMPOSITION PRODUCTS

By fire: Carbon Dioxide, Carbon Monoxide

HAZARDOUS POLYMERIZATION

Will not occur

SECTION 11 — TOXICOLOGICAL INFORMATION

CHRONIC HEALTH HAZARDS

IARC's Monograph No. 93 reports there is sufficient evidence of carcinogenicity in experimental rats exposed to titanium dioxide but inadequate evidence for carcinogenicity in humans and has assigned a Group 2B rating. In addition, the IARC summary concludes, "No significant exposure to titanium dioxide is thought to occur during the use of products in which titanium is bound to other materials, such as paint."

Ethylene Glycol is considered an animal teratogen. It has been shown to cause birth defects in rats and mice at high doses when given in drinking water or by gavage. There is no evidence to indicate it causes birth defects in humans.

TOXICOLOGY DATA

CAS No.	Ingredient Name			
107-21-1	Ethylene Glycol			
		LC50 RAT	4HR	Not Available
		LD50 RAT		4700 mg/kg
1332-58-7	Kaolin			
		LC50 RAT	4HR	Not Available
		LD50 RAT		Not Available
13463-67-7	Titanium Dioxide			
		LC50 RAT	4HR	Not Available
		LD50 RAT		Not Available

SECTION 12 — ECOLOGICAL INFORMATION

ECOTOXICOLOGICAL INFORMATION

No data available

SECTION 13 — DISPOSAL CONSIDERATIONS

WASTE DISPOSAL METHOD

Waste from this product is not hazardous as defined under the Resource Conservation and Recovery Act (RCRA) 40 CFR 261.

Incinerate in approved facility. Do not incinerate closed container. Dispose of in accordance with Federal, State/Provincial, and Local regulations regarding pollution.

SECTION 14 — TRANSPORT INFORMATION

Multi-modal shipping descriptions are provided for informational purposes and do not consider container sizes. The presence of a shipping description for a particular mode of transport (ocean, air, etc.), does not indicate that the product is packaged suitably for that mode of transport. All packaging must be reviewed for suitability prior to shipment, and compliance with the applicable regulations is the sole responsibility of the person offering the product for transport.

MATERIAL SAFETY DATA SHEET

B31WJ351
12 00

DATE OF PREPARATION
Jun 13, 2011

SECTION 1 — PRODUCT AND COMPANY IDENTIFICATION

PRODUCT NUMBER
B31WJ351
PRODUCT NAME
SOUTHWEST BUILDERS Interior Latex Semi-Gloss Enamel, Extra White
MANUFACTURER'S NAME
THE SHERWIN-WILLIAMS COMPANY
101 Prospect Avenue N.W.
Cleveland, OH 44115

Telephone Numbers and Websites

Product Information	www.sherwin-williams.com
Regulatory Information	(216) 566-2902 www.paintdocs.com
Medical Emergency	(216) 566-2917
Transportation Emergency*	(800) 424-9300

*for Chemical Emergency ONLY (spill, leak, fire, exposure, or accident)

SECTION 2 — COMPOSITION/INFORMATION ON INGREDIENTS

% by Weight	CAS Number	Ingredient	Units	Vapor Pressure
2	112-34-5	2-(2-Butoxyethoxy)-ethanol		
		ACGIH TLV	Not Available	0.06 mm
		OSHA PEL	Not Available	
1	107-21-1	Ethylene Glycol		
		ACGIH TLV	100 MG/M3 CEILING (aerosol)	0.12 mm
		OSHA PEL	50 PPM CEILING	
11	13463-67-7	Titanium Dioxide		
		ACGIH TLV	10 mg/m3 as Dust	
		OSHA PEL	10 mg/m3 Total Dust	
		OSHA PEL	5 mg/m3 Respirable Fraction	

SECTION 3 — HAZARDS IDENTIFICATION

ROUTES OF EXPOSURE
INHALATION of vapor or spray mist
EYE or SKIN contact with the product, vapor or spray mist

HMIS Codes

Health	2*
Flammability	0
Reactivity	0

EFFECTS OF OVEREXPOSURE
EYES: Irritation
SKIN: Prolonged or repeated exposure may cause irritation.
INHALATION: Irritation of the upper respiratory system.

In a confined area vapors in high concentration may cause headache, nausea or dizziness
Prolonged overexposure to hazardous ingredients in Section 2 may cause adverse chronic effects to the following organs or systems
- the liver
- the urinary system

SIGNS AND SYMPTOMS OF OVEREXPOSURE
Redness and itching or burning sensation may indicate eye or excessive skin exposure.
MEDICAL CONDITIONS AGGRAVATED BY EXPOSURE
None generally recognized
CANCER INFORMATION
For complete discussion of toxicology data refer to Section 11

B31WJ351

SECTION 9 — PHYSICAL AND CHEMICAL PROPERTIES

PRODUCT WEIGHT	9.56 lb/gal	1145 g/l
SPECIFIC GRAVITY	1.15	
BOILING POINT	212 - 448 °F	100 - 231 °C
MELTING POINT	Not Available	
VOLATILE VOLUME	63%	
EVAPORATION RATE	Slower than ether	
VAPOR DENSITY	Heavier than air	
SOLUBILITY IN WATER	N.A	
pH	9.5	

VOLATILE ORGANIC COMPOUNDS (VOC Theoretical - As Packaged)

0.77 lb/gal	92 g/l	Less Water and Federally Exempt Solvents
0.31 lb/gal	37 g/l	Emitted VOC

SECTION 10 — STABILITY AND REACTIVITY

STABILITY — Stable

CONDITIONS TO AVOID

None known

INCOMPATIBILITY

None known

HAZARDOUS DECOMPOSITION PRODUCTS

By fire: Carbon Dioxide, Carbon Monoxide

HAZARDOUS POLYMERIZATION

Will not occur

SECTION 11 — TOXICOLOGICAL INFORMATION

CHRONIC HEALTH HAZARDS

IARC's Monograph No. 93 reports there is sufficient evidence of carcinogenicity in experimental rats exposed to titanium dioxide but inadequate evidence for carcinogenicity in humans and has assigned a Group 2B rating. In addition, the IARC summary concludes, "No significant exposure to titanium dioxide is thought to occur during the use of products in which titanium is bound to other materials, such as paint."

Ethylene Glycol is considered an animal teratogen. It has been shown to cause birth defects in rats and mice at high doses when given in drinking water or by gavage. There is no evidence to indicate it causes birth defects in humans.

TOXICOLOGY DATA

CAS No.	Ingredient Name			
112-34-5	2-(2-Butoxyethoxy)-ethanol			
		LC50 RAT	4HR	Not Available
		LD50 RAT		5660 mg/kg
107-21-1	Ethylene Glycol			
		LC50 RAT	4HR	Not Available
		LD50 RAT		4700 mg/kg
13463-67-7	Titanium Dioxide			
		LC50 RAT	4HR	Not Available
		LD50 RAT		Not Available

SECTION 12 — ECOLOGICAL INFORMATION

ECOTOXICOLOGICAL INFORMATION

No data available

SECTION 13 — DISPOSAL CONSIDERATIONS

WASTE DISPOSAL METHOD

Waste from this product is not hazardous as defined under the Resource Conservation and Recovery Act (RCRA) 40 CFR 261.

Incinerate in approved facility. Do not incinerate closed container. Dispose of in accordance with Federal, State/Provincial, and Local regulations regarding pollution.

SECTION 14 — TRANSPORT INFORMATION

Multi-modal shipping descriptions are provided for informational purposes and do not consider container sizes. The presence of a shipping description for a particular mode of transport (ocean, air, etc.), does not indicate that the product is packaged suitably for that mode of transport. All packaging must be reviewed for suitability prior to shipment, and compliance with the applicable regulations is the sole responsibility of the person offering the product for transport.

MATERIAL SAFETY DATA SHEET

K119-SW
19 00

DATE OF PREPARATION
May 2, 2011

SECTION 1 — PRODUCT AND COMPANY IDENTIFICATION

PRODUCT NUMBER
K119-SW
PRODUCT NAME
R7K119 Lacquer Thinner
MANUFACTURER'S NAME
THE SHERWIN-WILLIAMS COMPANY
101 Prospect Avenue N.W.
Cleveland, OH 44115

Telephone Numbers and Websites

Regulatory Information	(216) 566-2902 www.paintdocs.com
Medical Emergency	(216) 566-2917
Transportation Emergency*	(800) 424-9300
*for Chemical Emergency ONLY (spill, leak, fire, exposure, or accident)	

SECTION 2 — COMPOSITION/INFORMATION ON INGREDIENTS

% by Weight	CAS Number	Ingredient	Units	Vapor Pressure
25	64742-89-8	Lt. Aliphatic Hydrocarbon Solvent		
		ACGIH TLV	100 PPM	53 mm
		OSHA PEL	100 PPM	
33	108-88-3	Toluene		
		ACGIH TLV	20 PPM	22 mm
		OSHA PEL	100 ppm (Skin)	
		OSHA PEL	150 ppm (Skin) STEL	
0.9	100-41-4	Ethylbenzene		
		ACGIH TLV	100 PPM	7.1 mm
		ACGIH TLV	125 PPM STEL	
		OSHA PEL	100 PPM	
		OSHA PEL	125 PPM STEL	
5	1330-20-7	Xylene		
		ACGIH TLV	100 PPM	5.9 mm
		ACGIH TLV	150 PPM STEL	
		OSHA PEL	100 PPM	
		OSHA PEL	150 PPM STEL	
4	67-56-1	Methanol		
		ACGIH TLV	200 ppm (Skin)	92 mm
		ACGIH TLV	250 ppm (Skin) STEL	
		OSHA PEL	200 ppm (Skin)	
		OSHA PEL	250 ppm (Skin) STEL	
10	67-63-0	2-Propanol		
		ACGIH TLV	200 PPM	33 mm
		ACGIH TLV	400 PPM STEL	
		OSHA PEL	400 PPM	
21	67-64-1	Acetone		
		ACGIH TLV	500 PPM	180 mm
		ACGIH TLV	750 PPM STEL	
		OSHA PEL	1000 PPM	
1	112-07-2	2-Butoxyethyl Acetate		
		ACGIH TLV	Not Available	1 mm
		OSHA PEL	Not Available	

SECTION 3 — HAZARDS IDENTIFICATION

ROUTES OF EXPOSURE
INHALATION of vapor or spray mist

Avoid contact with skin and eyes. Avoid breathing vapor and spray mist.
Wash hands after using.

VENTILATION

Local exhaust preferable. General exhaust acceptable if the exposure to materials in Section 2 is maintained below applicable exposure limits. Refer to OSHA Standards 1910.94, 1910.107, 1910.108.

RESPIRATORY PROTECTION

If personal exposure cannot be controlled below applicable limits by ventilation, wear a properly fitted organic vapor/particulate respirator approved by NIOSH/MSHA for protection against materials in Section 2.

PROTECTIVE GLOVES

Wear gloves which are recommended by glove supplier for protection against materials in Section 2.

EYE PROTECTION

Wear safety spectacles with unperforated sideshields.

OTHER PRECAUTIONS

Intentional misuse by deliberately concentrating and inhaling the contents can be harmful or fatal.

SECTION 9 — PHYSICAL AND CHEMICAL PROPERTIES

PRODUCT WEIGHT	6.64 lb/gal	795 g/l
SPECIFIC GRAVITY	0.80	
BOILING POINT	132 - 384 °F	55 - 195 °C
MELTING POINT	Not Available	
VOLATILE VOLUME	100%	
EVAPORATION RATE	Slower than ether	
VAPOR DENSITY	Heavier than air	
SOLUBILITY IN WATER	N.A.	

VOLATILE ORGANIC COMPOUNDS (VOC Theoretical - As Packaged)

6.65 lb/gal	797 g/l	Less Water and Federally Exempt Solvents
5.25 lb/gal	629 g/l	Emitted VOC

SECTION 10 — STABILITY AND REACTIVITY

STABILITY — Stable

CONDITIONS TO AVOID

None known

INCOMPATIBILITY

None known

HAZARDOUS DECOMPOSITION PRODUCTS

By fire: Carbon Dioxide, Carbon Monoxide

HAZARDOUS POLYMERIZATION

Will not occur

SECTION 11 — TOXICOLOGICAL INFORMATION

CHRONIC HEALTH HAZARDS

Reports have associated repeated and prolonged overexposure to solvents with permanent brain and nervous system damage.
Ethylbenzene is classified by IARC as possibly carcinogenic to humans (2B) based on inadequate evidence in humans and sufficient evidence in laboratory animals. Lifetime inhalation exposure of rats and mice to high ethylbenzene concentrations resulted in increases in certain types of cancer, including kidney tumors in rats and lung and liver tumors in mice. These effects were not observed in animals exposed to lower concentrations. There is no evidence that ethylbenzene causes cancer in humans.

MATERIAL SAFETY DATA SHEET

T67F6
15 00

DATE OF PREPARATION
May 1, 2011

SECTION 1 — PRODUCT AND COMPANY IDENTIFICATION

PRODUCT NUMBER
T67F6
PRODUCT NAME
SHER-WOOD® Fast Dry Vinyl Sealer
MANUFACTURER'S NAME
THE SHERWIN-WILLIAMS COMPANY
101 Prospect Avenue N.W.
Cleveland, OH 44115

Telephone Numbers and Websites

Regulatory Information	(216) 566-2902
Medical Emergency	(216) 566-2917
Transportation Emergency*	(800) 424-9300

*for Chemical Emergency ONLY (spill, leak, fire, exposure, or accident)

SECTION 2 — COMPOSITION/INFORMATION ON INGREDIENTS

% by Weight	CAS Number	Ingredient	Units	Vapor Pressure
4	64-17-5	Ethanol		
		ACGIH TLV	1000 PPM	44 mm
		OSHA PEL	1000 PPM	
4	67-63-0	2-Propanol		
		ACGIH TLV	200 PPM	33 mm
		ACGIH TLV	400 PPM STEL	
		OSHA PEL	400 PPM	
1	71-36-3	1-Butanol		
		ACGIH TLV	20 PPM	5.5 mm
		OSHA PEL	50 ppm (Skin) CEILING	
1	78-83-1	2-Methyl-1-propanol		
		ACGIH TLV	50 PPM	8.7 mm
		OSHA PEL	50 PPM	
50	67-64-1	Acetone		
		ACGIH TLV	500 PPM	180 mm
		ACGIH TLV	750 PPM STEL	
		OSHA PEL	1000 PPM	
9	110-12-3	Methyl Isoamyl Ketone		
		ACGIH TLV	50 PPM	4.5 mm
		OSHA PEL	50 PPM	
7	123-86-4	n-Butyl Acetate		
		ACGIH TLV	150 PPM	10 mm
		ACGIH TLV	200 PPM STEL	
		OSHA PEL	150 PPM	
		OSHA PEL	200 PPM STEL	
1	112926-00-8	Amorphous Precipitated Silica		
		ACGIH TLV	10 mg/m3 as Dust	
		OSHA PEL	6 mg/m3 as Dust	

SECTION 3 — HAZARDS IDENTIFICATION

ROUTES OF EXPOSURE
INHALATION of vapor or spray mist
EYE or SKIN contact with the product, vapor or spray mist
EFFECTS OF OVEREXPOSURE
EYES: Irritation.
SKIN: Prolonged or repeated exposure may cause irritation
INHALATION: Irritation of the upper respiratory system

HMIS Codes

Health	2
Flammability	3
Reactivity	0

T67F6

RESPIRATORY PROTECTION

If personal exposure cannot be controlled below applicable limits by ventilation, wear a properly fitted organic vapor/particulate respirator approved by NIOSH/MSHA for protection against materials in Section 2.

When sanding or abrading the dried film, wear a dust/mist respirator approved by NIOSH/MSHA for dust which may be generated from this product, underlying paint, or the abrasive.

PROTECTIVE GLOVES

Wear gloves which are recommended by glove supplier for protection against materials in Section 2.

EYE PROTECTION

Wear safety spectacles with unperforated sideshields.

OTHER PRECAUTIONS

Intentional misuse by deliberately concentrating and inhaling the contents can be harmful or fatal.

SECTION 9 — PHYSICAL AND CHEMICAL PROPERTIES

PRODUCT WEIGHT	7.37 lb/gal	883 g/l
SPECIFIC GRAVITY	0.89	
BOILING POINT	132 - 290 °F	55 - 143 °C
MELTING POINT	Not Available	
VOLATILE VOLUME	85%	
EVAPORATION RATE	Slower than ether	
VAPOR DENSITY	Heavier than air	
SOLUBILITY IN WATER	N.A.	

VOLATILE ORGANIC COMPOUNDS (VOC Theoretical - As Packaged)

4.54 lb/gal	544 g/l	Less Water and Federally Exempt Solvents
1.99 lb/gal	239 g/l	Emitted VOC

SECTION 10 — STABILITY AND REACTIVITY

STABILITY — Stable

CONDITIONS TO AVOID

None known.

INCOMPATIBILITY

None known.

HAZARDOUS DECOMPOSITION PRODUCTS

By fire: Carbon Dioxide, Carbon Monoxide, Oxides of Nitrogen, possibility of Hydrogen Cyanide

HAZARDOUS POLYMERIZATION

Will not occur.

SECTION 11 — TOXICOLOGICAL INFORMATION

CHRONIC HEALTH HAZARDS

No ingredient in this product is an IARC, NTP or OSHA listed carcinogen.

Reports have associated repeated and prolonged overexposure to solvents with permanent brain and nervous system damage.

TOXICOLOGY DATA

CAS No.	Ingredient Name			
64-17-5	Ethanol			
		LC50 RAT	4HR	Not Available
		LD50 RAT		7060 mg/kg
67-63-0	2-Propanol			
		LC50 RAT	4HR	Not Available
		LD50 RAT		5045 mg/kg
71-36-3	1-Butanol			
		LC50 RAT	4HR	8000 ppm
		LD50 RAT		790 mg/kg
78-83-1	2-Methyl-1-propanol			
		LC50 RAT	4HR	Not Available
		LD50 RAT		2460 mg/kg
67-64-1	Acetone			
		LC50 RAT	4HR	Not Available
		LD50 RAT		5800 mg/kg
110-12-3	Methyl Isoamyl Ketone			
		LC50 RAT	4HR	Not Available
		LD50 RAT		3200 mg/kg
123-86-4	n-Butyl Acetate			
		LC50 RAT	4HR	2000 ppm
		LD50 RAT		13100 mg/kg
112926-00-8	Amorphous Precipitated Silica			
		LC50 RAT	4HR	Not Available
		LD50 RAT		Not Available

MATERIAL SAFETY DATA SHEET

T77F56
07 00

DATE OF PREPARATION
May 1, 2011

SECTION 1 — PRODUCT AND COMPANY IDENTIFICATION

PRODUCT NUMBER
T77F56
PRODUCT NAME
SHER-WOOD® Hi-Bild PreCat Lacquer, Bright Rubbed Effect
MANUFACTURER'S NAME
THE SHERWIN-WILLIAMS COMPANY
101 Prospect Avenue N.W.
Cleveland, OH 44115

Telephone Numbers and Websites

Regulatory Information	(216) 566-2902
Medical Emergency	(216) 566-2917
Transportation Emergency*	(800) 424-9300

*for Chemical Emergency ONLY (spill, leak, fire, exposure, or accident)

SECTION 2 — COMPOSITION/INFORMATION ON INGREDIENTS

% by Weight	CAS Number	Ingredient	Units	Vapor Pressure
7	64-17-5	Ethanol		
		ACGIH TLV	1000 PPM	44 mm
		OSHA PEL	1000 PPM	
4	67-63-0	2-Propanol		
		ACGIH TLV	200 PPM	33 mm
		ACGIH TLV	400 PPM STEL	
		OSHA PEL	400 PPM	
4	71-36-3	1-Butanol		
		ACGIH TLV	20 PPM	5.5 mm
		OSHA PEL	50 ppm (Skin) CEILING	
8	78-83-1	2-Methyl-1-propanol		
		ACGIH TLV	50 PPM	8.7 mm
		OSHA PEL	50 PPM	
< 0.1	50-00-0	Formaldehyde (max.)		(See SECTION 8 for additional information)
		ACGIH TLV	0.3 PPM CEILING	27.56 mm
		OSHA PEL	0.75 PPM	
		OSHA PEL	2 PPM STEL	
7	67-64-1	Acetone		
		ACGIH TLV	500 PPM	180 mm
		ACGIH TLV	750 PPM STEL	
		OSHA PEL	1000 PPM	
31	123-86-4	n-Butyl Acetate		
		ACGIH TLV	150 PPM	10 mm
		ACGIH TLV	200 PPM STEL	
		OSHA PEL	150 PPM	
		OSHA PEL	200 PPM STEL	
5	628-63-7	Amyl Acetate		
		ACGIH TLV	100 PPM	4 mm
		OSHA PEL	100 PPM	

SECTION 3 — HAZARDS IDENTIFICATION

ROUTES OF EXPOSURE
INHALATION of vapor or spray mist
EYE or SKIN contact with the product, vapor or spray mist

HMIS Codes

Health	2*
Flammability	3
Reactivity	0

T77F56

Wash hands after using

This coating may contain materials classified as nuisance particulates (listed "as Dust" in Section 2) which may be present at hazardous levels only during sanding or abrading of the dried film. If no specific dusts are listed in Section 2, the applicable limits for nuisance dusts are ACGIH TLV 10 mg/m3 (total dust), 3 mg/m3 (respirable fraction), OSHA PEL 15 mg/m3 (total dust), 5 mg/m3 (respirable fraction)

VENTILATION

Local exhaust preferable. General exhaust acceptable if the exposure to materials in Section 2 is maintained below applicable exposure limits. Refer to OSHA Standards 1910.94, 1910.107, 1910.108

RESPIRATORY PROTECTION

A properly fitted, full face respirator effective for particulates, organic solvents, and formaldehyde or an air supplied respirator must be worn, unless air monitoring demonstrates vapor/mist concentrations are below permissible limits. Follow respirator manufacturers directions for respirator use

When sanding or abrading the dried film, wear a dust/mist respirator approved by NIOSH/MSHA for dust which may be generated from this product, underlying paint, or the abrasive.

PROTECTIVE GLOVES

Wear gloves which are recommended by glove supplier for protection against materials in Section 2

EYE PROTECTION

Wear safety spectacles with unperforated sideshields

OTHER PRECAUTIONS

Intentional misuse by deliberately concentrating and inhaling the contents can be harmful or fatal

SECTION 9 — PHYSICAL AND CHEMICAL PROPERTIES

PRODUCT WEIGHT	7.83 lb/gal	938 g/l
SPECIFIC GRAVITY	0.94	
BOILING POINT	132 - 306 °F	55 - 152 °C
MELTING POINT	Not Available	
VOLATILE VOLUME	75%	
EVAPORATION RATE	Slower than ether	
VAPOR DENSITY	Heavier than air	
SOLUBILITY IN WATER	N.A	

VOLATILE ORGANIC COMPOUNDS (VOC Theoretical - As Packaged)

5.13 lb/gal	615 g/l	Less Water and Federally Exempt Solvents
4.71 lb/gal	564 g/l	Emitted VOC

SECTION 10 — STABILITY AND REACTIVITY

STABILITY — Stable

CONDITIONS TO AVOID

None known

INCOMPATIBILITY

None known

HAZARDOUS DECOMPOSITION PRODUCTS

By fire: Carbon Dioxide, Carbon Monoxide, Oxides of Nitrogen, possibility of Hydrogen Cyanide

HAZARDOUS POLYMERIZATION

Will not occur

SECTION 11 — TOXICOLOGICAL INFORMATION

CHRONIC HEALTH HAZARDS

Reports have associated repeated and prolonged overexposure to solvents with permanent brain and nervous system damage.

Formaldehyde, listed by IARC, NTP and OSHA, has been shown to cause cancer of the nasal cavity in rats exposed to high levels. Available evidence in humans is inconclusive

MATERIAL SAFETY DATA SHEET

05-262-WB
10 00

DATE OF PREPARATION
Jun 13, 2011

SECTION 1 — PRODUCT AND COMPANY IDENTIFICATION

PRODUCT NUMBER
05-262-WB
PRODUCT NAME
Hi-Performance Coatings Acry-Shield Semi-Gloss Enamel, White Base
MANUFACTURER'S NAME
COLUMBIA PAINT & COATINGS
N112 Haven, P.O. Box 4569
Spokane, WA 99202-4569

Telephone Numbers and Webeites

Product Information	(509) 535-6311 www.columbiapaint.com
Regulatory Information	(216) 566-2902
Medical Emergency	(216) 566-2917
Transportation Emergency*	(800) 424-9300
*for Chemical Emergency ONLY (spill, leak, fire, exposure, or accident)	

SECTION 2 — COMPOSITION/INFORMATION ON INGREDIENTS

% by Weight	CAS Number	Ingredient	Units	Vapor Pressure
4	107-21-1	Ethylene Glycol		
		ACGIH TLV	100 MG/M3 CEILING (aerosol)	0.12 mm
		OSHA PEL	50 PPM CEILING	
4	471-34-1	Calcium Carbonate		
		ACGIH TLV	10 mg/m3 as Dust	
		OSHA PEL	15 mg/m3 Total Dust	
		OSHA PEL	5 mg/m3 Respirable Fraction	
20	13463-67-7	Titanium Dioxide		
		ACGIH TLV	10 mg/m3 as Dust	
		OSHA PEL	10 mg/m3 Total Dust	
		OSHA PEL	5 mg/m3 Respirable Fraction	

SECTION 3 — HAZARDS IDENTIFICATION

ROUTES OF EXPOSURE
INHALATION of vapor or spray mist
EYE or SKIN contact with the product, vapor or spray mist.

HMIS Codes

Health	2*
Flammability	0
Reactivity	0

EFFECTS OF OVEREXPOSURE
EYES: Irritation.
SKIN: Prolonged or repeated exposure may cause irritation.
INHALATION: Irritation of the upper respiratory system.

In a confined area vapors in high concentration may cause headache, nausea or dizziness.
Prolonged overexposure to hazardous ingredients in Section 2 may cause adverse chronic effects to the following organs or systems.
- the liver
- the urinary system

SIGNS AND SYMPTOMS OF OVEREXPOSURE
Redness and itching or burning sensation may indicate eye or excessive skin exposure.
MEDICAL CONDITIONS AGGRAVATED BY EXPOSURE
None generally recognized
CANCER INFORMATION
For complete discussion of toxicology data refer to Section 11.

05-262-WB

SECTION 4 — FIRST AID MEASURES

EYES: Flush eyes with large amounts of water for 15 minutes. Get medical attention.
SKIN: Wash affected area thoroughly with soap and water.
Remove contaminated clothing and launder before re-use.
INHALATION: If affected, remove from exposure. Restore breathing. Keep warm and quiet.
INGESTION: Do not induce vomiting. Get medical attention immediately.

SECTION 5 — FIRE FIGHTING MEASURES

FLASH POINT	LEL	UEL	FLAMMABILITY CLASSIFICATION
Not Applicable	N.A.	N.A.	Not Applicable

EXTINGUISHING MEDIA
Carbon Dioxide, Dry Chemical, Alcohol Foam

UNUSUAL FIRE AND EXPLOSION HAZARDS
Closed containers may explode (due to the build-up of pressure) when exposed to extreme heat.
During emergency conditions overexposure to decomposition products may cause a health hazard. Symptoms may not be immediately apparent. Obtain medical attention.

SPECIAL FIRE FIGHTING PROCEDURES
Full protective equipment including self-contained breathing apparatus should be used.
Water spray may be ineffective. If water is used, fog nozzles are preferable. Water may be used to cool closed containers to prevent pressure build-up and possible autoignition or explosion when exposed to extreme heat.

SECTION 6 — ACCIDENTAL RELEASE MEASURES

STEPS TO BE TAKEN IN CASE MATERIAL IS RELEASED OR SPILLED
Remove all sources of ignition. Ventilate the area.
Remove with inert absorbent.

SECTION 7 — HANDLING AND STORAGE

STORAGE CATEGORY
Not Applicable

PRECAUTIONS TO BE TAKEN IN HANDLING AND STORAGE
Keep container closed when not in use. Transfer only to approved containers with complete and appropriate labeling. Do not take internally. Keep out of the reach of children.

SECTION 8 — EXPOSURE CONTROLS/PERSONAL PROTECTION

PRECAUTIONS TO BE TAKEN IN USE
Use only with adequate ventilation.
Avoid contact with skin and eyes. Avoid breathing vapor and spray mist.
Wash hands after using.
This coating may contain materials classified as nuisance particulates (listed "as Dust" in Section 2) which may be present at hazardous levels only during sanding or abrading of the dried film. If no specific dusts are listed in Section 2, the applicable limits for nuisance dusts are ACGIH TLV 10 mg/m3 (total dust), 3 mg/m3 (respirable fraction), OSHA PEL 15 mg/m3 (total dust), 5 mg/m3 (respirable fraction).
Removal of old paint by sanding, scraping or other means may generate dust or fumes that contain lead. Exposure to lead dust or fumes may cause brain damage or other adverse health effects, especially in children or pregnant women. Controlling exposure to lead or other hazardous substances requires the use of proper protective equipment, such as a properly fitted respirator (NIOSH approved) and proper containment and cleanup. For more information, call the National Lead Information Center at 1-800-424-LEAD (in US) or contact your local health authority.

VENTILATION
Local exhaust preferable. General exhaust acceptable if the exposure to materials in Section 2 is maintained below applicable exposure limits. Refer to OSHA Standards 1910.94, 1910.107, 1910.108.

RESPIRATORY PROTECTION
If personal exposure cannot be controlled below applicable limits by ventilation, wear a properly fitted organic vapor/particulate respirator approved by NIOSH/MSHA for protection against materials in Section 2.
When sanding or abrading the dried film, wear a dust/mist respirator approved by NIOSH/MSHA for dust which may be generated from this product, underlying paint, or the abrasive.

PROTECTIVE GLOVES
Wear gloves which are recommended by glove supplier for protection against materials in Section 2.

EYE PROTECTION
Wear safety spectacles with unperforated sideshields.

MATERIAL SAFETY DATA SHEET

17-123-21
03 00

DATE OF PREPARATION
Feb 5, 2011

SECTION 1 — PRODUCT AND COMPANY IDENTIFICATION

PRODUCT NUMBER
17-123-21
PRODUCT NAME
HI-PERFORMANCE Instant Dry Acrylic Latex Traffic Paint, Handicap Blue
MANUFACTURER'S NAME
COLUMBIA PAINT & COATINGS
N112 Haven, P.O. Box 4569
Spokane, WA 99202-4569

Telephone Numbers and Websites

Product Information	(509) 535-6311 www.columbiapaint.com
Regulatory Information	(216) 566-2902
Medical Emergency	(216) 566-2917
Transportation Emergency*	(800) 424-9300

*for Chemical Emergency ONLY (spill, leak, fire, exposure, or accident)

SECTION 2 — COMPOSITION/INFORMATION ON INGREDIENTS

% by Weight	CAS Number	Ingredient	Units	Vapor Pressure
2	67-56-1	Methanol		
		ACGIH TLV	200 ppm (Skin)	92 mm
		ACGIH TLV	250 ppm (Skin) STEL	
		OSHA PEL	200 ppm (Skin)	
		OSHA PEL	250 ppm (Skin) STEL	
60	471-34-1	Calcium Carbonate		
		ACGIH TLV	10 mg/m3 as Dust	
		OSHA PEL	15 mg/m3 Total Dust	
		OSHA PEL	5 mg/m3 Respirable Fraction	
0.9	13463-67-7	Titanium Dioxide		
		ACGIH TLV	10 mg/m3 as Dust	
		OSHA PEL	10 mg/m3 Total Dust	
		OSHA PEL	5 mg/m3 Respirable Fraction	

SECTION 3 — HAZARDS IDENTIFICATION

HMIS Codes

Health	3*
Flammability	2
Reactivity	0

ROUTES OF EXPOSURE
INHALATION of vapor or spray mist
EYE or SKIN contact with the product, vapor or spray mist
EFFECTS OF OVEREXPOSURE
EYES: Irritation
SKIN: Prolonged or repeated exposure may cause irritation
INHALATION: Irritation of the upper respiratory system

May cause nervous system depression. Extreme overexposure may result in unconsciousness and possibly death.
Prolonged overexposure to hazardous ingredients in Section 2 may cause adverse chronic effects to the following organs or systems.
- the liver
- the urinary system

SIGNS AND SYMPTOMS OF OVEREXPOSURE
Headache, dizziness, nausea, and loss of coordination are indications of excessive exposure to vapors or spray mists.
Redness and itching or burning sensation may indicate eye or excessive skin exposure.
MEDICAL CONDITIONS AGGRAVATED BY EXPOSURE
May cause allergic skin reaction in susceptible persons or skin sensitization.
CANCER INFORMATION
For complete discussion of toxicology data refer to Section 11

SECTION 9 — PHYSICAL AND CHEMICAL PROPERTIES

PRODUCT WEIGHT	13.84 lb/gal	1658 g/l
SPECIFIC GRAVITY	1.67	
BOILING POINT	148 - 213 °F	64 - 100 °C
MELTING POINT	Not Available	
VOLATILE VOLUME	37%	
EVAPORATION RATE	Slower than ether	
VAPOR DENSITY	Heavier than air	
SOLUBILITY IN WATER	N.A	
pH	9.5	

VOLATILE ORGANIC COMPOUNDS (VOC Theoretical - As Packaged)

0.75 lb/gal	89 g/l	Less Water and Federally Exempt Solvents
0.52 lb/gal	62 g/l	Emitted VOC

SECTION 10 — STABILITY AND REACTIVITY

STABILITY — Stable

CONDITIONS TO AVOID

None known.

INCOMPATIBILITY

None known

HAZARDOUS DECOMPOSITION PRODUCTS

By fire: Carbon Dioxide, Carbon Monoxide

HAZARDOUS POLYMERIZATION

Will not occur

SECTION 11 — TOXICOLOGICAL INFORMATION

CHRONIC HEALTH HAZARDS

Reports have associated repeated and prolonged overexposure to solvents with permanent brain and nervous system damage.

IARC's Monograph No. 93 reports there is sufficient evidence of carcinogenicity in experimental rats exposed to titanium dioxide but inadequate evidence for carcinogenicity in humans and has assigned a Group 2B rating. In addition, the IARC summary concludes, "No significant exposure to titanium dioxide is thought to occur during the use of products in which titanium is bound to other materials, such as paint."

TOXICOLOGY DATA

CAS No.	Ingredient Name			
67-56-1	Methanol			
		LC50 RAT	4HR	64000 ppm
		LD50 RAT		5630 mg/kg
471-34-1	Calcium Carbonate			
		LC50 RAT	4HR	Not Available
		LD50 RAT		Not Available
13463-67-7	Titanium Dioxide			
		LC50 RAT	4HR	Not Available
		LD50 RAT		Not Available

SECTION 12 — ECOLOGICAL INFORMATION

ECOTOXICOLOGICAL INFORMATION

No data available

SECTION 13 — DISPOSAL CONSIDERATIONS

WASTE DISPOSAL METHOD

Waste from this product is not hazardous as defined under the Resource Conservation and Recovery Act (RCRA) 40 CFR 261.

Incinerate in approved facility. Do not incinerate closed container. Dispose of in accordance with Federal, State/Provincial, and Local regulations regarding pollution.

SECTION 14 — TRANSPORT INFORMATION

Multi-modal shipping descriptions are provided for informational purposes and do not consider container sizes. The presence of a shipping description for a particular mode of transport (ocean, air, etc.), does not indicate that the product is packaged suitably for that mode of transport. All packaging must be reviewed for suitability prior to shipment, and compliance with the applicable regulations is the sole responsibility of the person offering the product for transport.

MATERIAL SAFETY DATA SHEET

CX17125CC
18 00

DATE OF PREPARATION
Apr 28, 2011

SECTION 1 — PRODUCT AND COMPANY IDENTIFICATION

PRODUCT NUMBER
CX17125CC
PRODUCT NAME
HI-PERFORMANCE Fast Dry Acrylic Latex Traffic Paint, Yellow
MANUFACTURER'S NAME
COLUMBIA PAINT & COATINGS
N112 Haven, P.O. Box 4569
Spokane, WA 99202-4569

Telephone Numbers and Websites

Product Information	(509) 535-6311 www.columbiapaint.com
Regulatory Information	(216) 566-2902
Medical Emergency	(216) 566-2917
Transportation Emergency*	(800) 424-9300
*for Chemical Emergency ONLY (spill, leak, fire, exposure, or accident)	

SECTION 2 — COMPOSITION/INFORMATION ON INGREDIENTS

% by Weight	CAS Number	Ingredient	Units	Vapor Pressure
2	67-56-1	Methanol		
		ACGIH TLV	200 ppm (Skin)	92 mm
		ACGIH TLV	250 ppm (Skin) STEL	
		OSHA PEL	200 ppm (Skin)	
		OSHA PEL	250 ppm (Skin) STEL	
54	471-34-1	Calcium Carbonate		
		ACGIH TLV	10 mg/m3 as Dust	
		OSHA PEL	15 mg/m3 Total Dust	
		OSHA PEL	5 mg/m3 Respirable Fraction	
3	13463-67-7	Titanium Dioxide		
		ACGIH TLV	10 mg/m3 as Dust	
		OSHA PEL	10 mg/m3 Total Dust	
		OSHA PEL	5 mg/m3 Respirable Fraction	

SECTION 3 — HAZARDS IDENTIFICATION

HMIS Codes

Health	3*
Flammability	2
Reactivity	0

ROUTES OF EXPOSURE
INHALATION of vapor or spray mist
EYE or SKIN contact with the product, vapor or spray mist
EFFECTS OF OVEREXPOSURE
EYES: Irritation
SKIN: Prolonged or repeated exposure may cause irritation
INHALATION: Irritation of the upper respiratory system

May cause nervous system depression. Extreme overexposure may result in unconsciousness and possibly death.
Prolonged overexposure to hazardous ingredients in Section 2 may cause adverse chronic effects to the following organs or systems
- the liver
- the urinary system

SIGNS AND SYMPTOMS OF OVEREXPOSURE
Headache, dizziness, nausea, and loss of coordination are indications of excessive exposure to vapors or spray mists
Redness and itching or burning sensation may indicate eye or excessive skin exposure
MEDICAL CONDITIONS AGGRAVATED BY EXPOSURE
None generally recognized
CANCER INFORMATION
For complete discussion of toxicology data refer to Section 11

CX17125CC

SECTION 9 — PHYSICAL AND CHEMICAL PROPERTIES

PRODUCT WEIGHT	13.41 lb/gal	1606 g/l
SPECIFIC GRAVITY	1.61	
BOILING POINT	148 - 500 °F	64 - 260 °C
MELTING POINT	Not Available	
VOLATILE VOLUME	40%	
EVAPORATION RATE	Slower than ether	
VAPOR DENSITY	Heavier than air	
SOLUBILITY IN WATER	N A	
pH	9 5	

VOLATILE ORGANIC COMPOUNDS (VOC Theoretical - As Packaged)

0.72 lb/gal	87 g/l	Less Water and Federally Exempt Solvents
0.48 lb/gal	57 g/l	Emitted VOC

SECTION 10 — STABILITY AND REACTIVITY

STABILITY — Stable

CONDITIONS TO AVOID

None known.

INCOMPATIBILITY

None known

HAZARDOUS DECOMPOSITION PRODUCTS

By fire: Carbon Dioxide, Carbon Monoxide

HAZARDOUS POLYMERIZATION

Will not occur

SECTION 11 — TOXICOLOGICAL INFORMATION

CHRONIC HEALTH HAZARDS

Reports have associated repeated and prolonged overexposure to solvents with permanent brain and nervous system damage

IARC's Monograph No. 93 reports there is sufficient evidence of carcinogenicity in experimental rats exposed to titanium dioxide but inadequate evidence for carcinogenicity in humans and has assigned a Group 2B rating. In addition, the IARC summary concludes, "No significant exposure to titanium dioxide is thought to occur during the use of products in which titanium is bound to other materials, such as paint."

TOXICOLOGY DATA

CAS No.	Ingredient Name			
67-56-1	Methanol			
		LC50 RAT	4HR	64000 ppm
		LD50 RAT		5630 mg/kg
471-34-1	Calcium Carbonate			
		LC50 RAT	4HR	Not Available
		LD50 RAT		Not Available
13463-67-7	Titanium Dioxide			
		LC50 RAT	4HR	Not Available
		LD50 RAT		Not Available

SECTION 12 — ECOLOGICAL INFORMATION

ECOTOXICOLOGICAL INFORMATION

No data available.

SECTION 13 — DISPOSAL CONSIDERATIONS

WASTE DISPOSAL METHOD

Waste from this product is not hazardous as defined under the Resource Conservation and Recovery Act (RCRA) 40 CFR 261

Incinerate in approved facility. Do not incinerate closed container. Dispose of in accordance with Federal, State/Provincial, and Local regulations regarding pollution

SECTION 14 — TRANSPORT INFORMATION

Multi-modal shipping descriptions are provided for informational purposes and do not consider container sizes. The presence of a shipping description for a particular mode of transport (ocean, air, etc.), does not indicate that the product is packaged suitably for that mode of transport. All packaging must be reviewed for suitability prior to shipment, and compliance with the applicable regulations is the sole responsibility of the person offering the product for transport.

MATERIAL SAFETY DATA SHEET

17-123-61
08 00

DATE OF PREPARATION
Apr 28, 2011

SECTION 1 — PRODUCT AND COMPANY IDENTIFICATION

PRODUCT NUMBER
17-123-61
PRODUCT NAME
HI-PERFORMANCE Instant Dry Acrylic Latex Traffic Paint, Red
MANUFACTURER'S NAME
COLUMBIA PAINT & COATINGS
N112 Haven, P.O. Box 4569
Spokane, WA 99202-4569

Telephone Numbers and Websites

Product Information	(509) 535-6311 www.columbiapaint.com
Regulatory Information	(216) 566-2902
Medical Emergency	(216) 566-2917
Transportation Emergency*	(800) 424-9300
*for Chemical Emergency ONLY (spill, leak, fire, exposure, or accident)	

SECTION 2 — COMPOSITION/INFORMATION ON INGREDIENTS

% by Weight	CAS Number	Ingredient	Units	Vapor Pressure
2	67-56-1	Methanol		
		ACGIH TLV	200 ppm (Skin)	92 mm
		ACGIH TLV	250 ppm (Skin) STEL	
		OSHA PEL	200 ppm (Skin)	
		OSHA PEL	250 ppm (Skin) STEL	
61	471-34-1	Calcium Carbonate		
		ACGIH TLV	10 mg/m3 as Dust	
		OSHA PEL	15 mg/m3 Total Dust	
		OSHA PEL	5 mg/m3 Respirable Fraction	

SECTION 3 — HAZARDS IDENTIFICATION

HMIS Codes

Health	3
Flammability	2
Reactivity	0

ROUTES OF EXPOSURE
INHALATION of vapor or spray mist
EYE or SKIN contact with the product, vapor or spray mist
EFFECTS OF OVEREXPOSURE
EYES: Irritation
SKIN: Prolonged or repeated exposure may cause irritation
INHALATION: Irritation of the upper respiratory system

May cause nervous system depression. Extreme overexposure may result in unconsciousness and possibly death
Prolonged overexposure to hazardous ingredients in Section 2 may cause adverse chronic effects to the following organs or systems:
- the liver
- the urinary system

SIGNS AND SYMPTOMS OF OVEREXPOSURE
Headache, dizziness, nausea, and loss of coordination are indications of excessive exposure to vapors or spray mists
Redness and itching or burning sensation may indicate eye or excessive skin exposure.
MEDICAL CONDITIONS AGGRAVATED BY EXPOSURE
May cause allergic skin reaction in susceptible persons or skin sensitization
CANCER INFORMATION
For complete discussion of toxicology data refer to Section 11

SECTION 9 — PHYSICAL AND CHEMICAL PROPERTIES

PRODUCT WEIGHT	13.90 lb/gal	1665 g/l
SPECIFIC GRAVITY	1 67	
BOILING POINT	148 - 213 °F	64 - 100 °C
MELTING POINT	Not Available	
VOLATILE VOLUME	37%	
EVAPORATION RATE	Slower than ether	
VAPOR DENSITY	Heavier than air	
SOLUBILITY IN WATER	N A	
pH	9 5	

VOLATILE ORGANIC COMPOUNDS (VOC Theoretical - As Packaged)

0 72 lb/gal	87 g/l	Less Water and Federally Exempt Solvents
0 50 lb/gal	60 g/l	Emitted VOC

SECTION 10 — STABILITY AND REACTIVITY

STABILITY — Stable

CONDITIONS TO AVOID

None known

INCOMPATIBILITY

None known

HAZARDOUS DECOMPOSITION PRODUCTS

By fire Carbon Dioxide, Carbon Monoxide

HAZARDOUS POLYMERIZATION

Will not occur

SECTION 11 — TOXICOLOGICAL INFORMATION

CHRONIC HEALTH HAZARDS

No ingredient in this product is an IARC, NTP or OSHA listed carcinogen

Reports have associated repeated and prolonged overexposure to solvents with permanent brain and nervous system damage

TOXICOLOGY DATA

CAS No.	Ingredient Name			
67-56-1	Methanol			
		LC50 RAT	4HR	64000 ppm
		LD50 RAT		5630 mg/kg
471-34-1	Calcium Carbonate			
		LC50 RAT	4HR	Not Available
		LD50 RAT		Not Available

SECTION 12 — ECOLOGICAL INFORMATION

ECOTOXICOLOGICAL INFORMATION

No data available

SECTION 13 — DISPOSAL CONSIDERATIONS

WASTE DISPOSAL METHOD

Waste from this product is not hazardous as defined under the Resource Conservation and Recovery Act (RCRA) 40 CFR 261

Incinerate in approved facility Do not incinerate closed container Dispose of in accordance with Federal, State/Provincial, and Local regulations regarding pollution

SECTION 14 — TRANSPORT INFORMATION

Multi-modal shipping descriptions are provided for informational purposes and do not consider container sizes The presence of a shipping description for a particular mode of transport (ocean, air, etc), does not indicate that the product is packaged suitably for that mode of transport All packaging must be reviewed for suitability prior to shipment, and compliance with the applicable regulations is the sole responsibility of the person offering the product for transport

US Ground (DOT)

Not Regulated for Transportation

Canada (TDG)

Not Regulated for Transportation

IMO

Not Regulated for Transportation

APPENDIX D: MODELING PROTOCOL APPROVAL & DEQ CORRESPONDENCE

THIS PAGE INTENTIONALLY LEFT BLANK FOR TWO-SIDED PRINTING

STATE OF IDAHO
DEPARTMENT OF
ENVIRONMENTAL QUALITY

1410 NORTH HILTON, BOISE, ID 83706 · (208) 373-0502

C. L. "BUTCH" OTTER, GOVERNOR
TONI HARDESTY, DIRECTOR

October 16, 2012

Sarah Stine
TORF Environmental Management
Boise, ID

RE: Modeling Protocol for the Idaho State University Permit to Construct for proposed Modifications to various sources

Sarah:

DEQ received your dispersion modeling protocol submitted to me via email on August 28, 2012. The modeling protocol was submitted on behalf of Idaho State University (ISU). The modeling protocol proposes methods and data for use in the ambient impact analyses of a Permit to Construct application for proposed modifications of various sources at ISU.

The modeling protocol has been reviewed and DEQ has the following comments:

- Comment 1: The submitted application must provide thorough and complete justification and documentation of release parameters of all sources included in the modeling analyses. As results approach applicable standards, DEQ will demand a greater degree of stack parameter justification.

- Comment 2: The proposed receptor grid appears reasonable. However, it is the applicant's responsibility to use a sufficiently tight receptor network such that the maximum modeled concentration is reasonably resolved. If DEQ conducts verification modeling analyses with a tighter receptor grid and compliance with standards is no longer demonstrated, the permit will be denied.

- Comment 3: The emissions calculations in the protocol were not reviewed by DEQ so approval of this protocol does not constitute approval of emissions calculation methods.

- Comment 4: The protocol proposed using meteorological data collected from the Pocatello airport. DEQ has studied the meteorology of the valley and the site location, and has concluded that Pocatello airport data do not reasonably represent the site. DEQ will require use of two data sets in the air impact analyses: meteorological data from the Simplot site in Pocatello; meteorological data collected in Inkom. To adequately demonstrate compliance, modeling results from both data sets must show compliance with standards. These data are processed and ready for input to the AERMOD model.

- Comment 5: DEQ reviewed the emissions units involved in the proposed modification. Considering the distances between emissions units showing emissions increases, and considering the nature of the emissions release, DEQ has determined that site specific modeling analyses will not be required for criteria pollutants.

DEQ has developed modeling thresholds (presented in DEQ's Air Modeling Guideline) and a description on how such thresholds are to be applied. Only emissions increases are considered. Emissions decreases at a specific source are not included in the evaluation because of potential differences in dispersion characteristics between sources showing and increase and those showing a decrease. Since the proposed project involves numerous sources that are separated by a large distance at ISU, DEQ grouped sources that were sufficiently close and applied the modeling thresholds to each group. The following were the source groups: Bldg22 Group - paint booth No. 3, shop baghouse No. 1, Boilers No. 1-4; Bldg48 Group - paint booth No. 1, paint booth No. 2; Bldg38 Group - boiler No. 37; Bldg65 Group – Boiler No. 36; Bldg71 Group – Boiler No. 18.

Total emissions increases of each group were below the unconditional Level 1 modeling thresholds except for Bldg22 Group. Bldg22 Group had emissions over Level 1 thresholds for annual NOx, 24-hour PM2.5, and annual PM2.5. However, the emissions were below the case-by-case Level 2 thresholds. To evaluate whether modeling would be needed for these sources, DEQ considered: 1) the magnitude of the emissions increase (well below Level 2 thresholds); 2) any proposed emissions decreases (large decrease at Boiler No. 1); 3) dispersion characteristics of the sources (hot stack releases with a relatively high stack); 4) distance to potentially exposed public (immediately next to the source at groundlevel); 5) existing air quality in the area and the presence of other pollution sources (few or no other emissions sources in the immediate area). DEQ then concluded that the use of Level 2 thresholds are appropriate for the sources involved and modeling of criteria pollutants will not be required for the project.

DEQ's modeling staff considers the submitted dispersion modeling protocol, with resolution of the additional items noted above, to be approved. It should be noted, however, that the approval of this modeling protocol is not meant to imply approval of a completed dispersion modeling analysis. Please refer to the *State of Idaho Air Quality Modeling Guideline*, which is available on the Internet at http://www.deq.state.id.us/air/permits_forms/permitting/modeling_guideline.pdf, for further guidance.

To ensure a complete and timely review of the final analysis, our modeling staff requests that electronic copies of all modeling input and output files (including BPIP and AERMAP input and output files) are submitted with an analysis report. If DEQ provided model-ready meteorological data files, then these do not need to be resubmitted to DEQ with the application. If you have any further questions or comments, please contact me at (208) 373-0112.

Sincerely,

Kevin Schilling

Kevin Schilling
Stationary Source Air Modeling Coordinator
Idaho Department of Environmental Quality
208 373-0112