RECEIVED
MAR 02 2012
DEPARTMENT OF ENVIRONMENTAL QUALITY
STATE A.Q. PROGRAM

woodgrain millwork

Tier I (Title V) Permit Renewal Application

Permit T1--060054

Facility #075-00001

February 27, 2012

The methods used for determining compliance status, including applicable monitoring, recordkeeping, reporting or test methods were included with the initial operating permit application submittal, are still current and applicable. Woodgrain is in compliance with all applicable requirements affecting the facility as a whole as well as the specific emission units located at the facility, therefore a compliance schedule is not required with this application. Woodgrain will continue to be in compliance with applicable requirements, for which it is in compliance, and will, in a timely manner or at such a schedule expressly required by the applicable requirement, meet additional applicable requirements that become effective during the permit term.

The submittal of compliance certifications during the five-year term of the operating permit will continue to occur semi-annually and annually within 30 days of the end of the specified reporting period.

Certification of Truth, Accuracy, and Completeness (by Responsible Official).

I certify that, based on information and belief formed after reasonable inquire, the statements and information in this document are true, accurate, and comp

Phil Steklenski
Name

Vice President Millwork Division
Title

Signature

February 27, 2012
Date

Table of Contents

1.0 FACILITY DESCRIPTION 4
2.0 Current Permit Action 6
3.0 Emission Inventory 7
3.1 Facility Potential to Emit (PTE) Emissions Summary 7
3.2 VOC Emissions 7
3.3 Particulate Emissions 8
3.4 Facility Natural Gas Emissions 9
4.0 APPLICABLE REQUIREMNTS 11
5.0 INSIGNIFICANT ACTIVITES 16
6.0 NESHAPS 17
6.1 40 CFR 63 Subpart KK - Printing and Publishing Industry 17
6.2 40 CFR 63 Subpart QQQQ- Surface Coating of Building Products 17
6.0 PERMIT SHIELD 18
APPENDIX A – Facility Maps 19
APPENDIX B – DEQ FORMS 21
APPENDIX C – CYCLONE EMISSIONS FACTOR REPORT 52

1.0 FACILITY DESCRIPTION

Woodgrain Millwork Inc. (Woodgrain) owns and operates a facility located within the city Fruitland, Idaho in Payette County. Woodgrain has been in business for over 50 years and is headquartered at this facility. This facility processes dried rough-cut lumber into decorative mouldings and window and door parts for the housing, manufactured housing and recreational vehicle markets. Additionally Woodgrain treats window parts to meet Window and Door Manufacturing Association (WDMA) standards and "prefinishes" mouldings and doors with coatings, and wraps simulated finishes on mouldings.

The facility site consists of 8 manufacturing buildings and various storage and administrative buildings.

Building 1 contains the moulding wrapping operation a raw moulding warehouse and a spray booth for prefinishing doors.

Building 2 contains the coating and print operations. Mouldings can be coated with paint and/or printed with a simulated wood pattern.

Building 3 contains various moulding and shaping equipment and a water bourn prime operation.

Building 4 contains aripsaw and optimization cut line, various moulders and shapers, RF ovens, and the woodtreat operation.

Building 5 contains an automated optimization process cut line, various finger jointers, and various moulders and shapers.

Building 6 contains the various shapers, moulders and embossing equipment.

Building 9 contains various finger jointers, various moulders shapers.

Building 11 contains the shavings bagging operation. Most of the shavings produced at the facility are bagged and sold as animal bedding.

Equipment Summary:

Building 1	Building 2	Building 3	Building 4	Building 5	Building 6	Building 9	Building 11
12 Wrappers	Coating mixing room	373 moulder	#1 Lam Moulder	#1 Cutline 12 chopsaws	Emboss machine	113 Ripsaw	Bagger
2 tenenors	16 Coating Lines	373-01 tenenor	#2 Lam Moulder	1 chopsaw 521 cutstock	Scallop machine	2- Optimizing chopsaws	Shaker
2 Paper slitters	Profile sander	374 moulder	#351 Single band resaw	Small Planer	4- 1/4 circle machines	731 Horizontal backrip	
Paper printer	sander baghouse	374-01 tenenor	377 Weinig moulder	Chipper	4- 1/4 circle trimsaws	732 Re-rip saw	
Door coatings spray booth	North drying oven	375 moulder	377-01 progressive tenenor	531 Backrip	3- Rosette Machines	732 Re-rip chopsaw	
2 Printers	South drying oven	Vacuum coat paint line	377-02 weinig 4 head moulder	541 Fingerjointer	1-Tenenor	2-Reclaim chopsaws	
Door router	Hot melt glue gun/packing	Spray booth paint line	378 Moulder	543 fingerjointer	2- Chopsaws	1- Cutstock chopsaw	
2 Table saws	Spiral wrapper	Industrial chopsaw	378-01 tenenor	541 fj chopsaw	1 Larger type mitersaw	741 Fingerjointer	
Radial arm saw	1 Miter Saw	Industrial chopsaw	378-02 Core moulder	542 fj chopsaw	4 Dewalt miter saws	742 Fingerjointer	
3 miter saws	2 Distilation Units	#353 twin band resaw	379 Moulder	543 fj chopsaw	1 Disc sander	741 fj chopsaw	
2 Gang ripsaws		#1 Triad nailer	379-01 tenenor	551 twin resaw	3 Drilling machines	742 fj chopsaw	
3-Baghouses		#2 Triad nailer	379-02 Core moulder	552 single resaw	1 Pistorious saw/drill	Hammermill hog	
Door oven		flat jamb nailer	Industrial chopsaw	553 twin resaw	1 inline tenenor/rosette machine	3 mitersaws	
Backer machine		Linares saw	111 ripsaw	561 Core moulder	2 Rope machines	1-Small Planer	
		3 dewalt miter saws	Treat system	555 Panel rip saw	2 Single band saws		
		314 TriSate panel ripsaw	1 miter saw	571 Moulder	Norfield miter machine		
		376 Moulder	3 RF Ovens	572 Moulder	1 Table saw		
		381 Greenlee tenenor	#1 Belt Sander	573 Moulder			
		End trim saw	#2 Belt Sander	574 Moulder			
		Brickmold nailer	4 spindle router	575 Moulder			
		Coatings mixer	#1 Drill press	576 Moulder			
			Newman planer	Tablesaw			
				562 edgestrip moulder			
				Edgetrip cutoff saw			
				3 head shaper			
				6 miter saws			

2.0 Current Permit Action

The current permit action that this permit application addresses is the required 5 year renewal of the facility Tier I (Title V) application. The facility is operating in substantially the same manner as it did during the previous renewal cycle. Although the current downturn in the economy, especially the housing industry has significantly reduced the throughput at the facility, Woodgrain intends to maintain the ability to operate at the original levels should demand return.

3.0 Emission Inventory

This section summarizes the facility emissions. The primary emissions from the facility are Non-Point source VOC emissions from the prefinishing and treating door, window and decorative trim pieces and particulate emissions from the woodcutting and shaping operations. Particulates are collected from these processes via various process cyclones and baghouses. The shavings collected in the process cyclones and baghouses is sold as animal bedding or as filler for other commercial products.

3.1Facility Potential to Emit (PTE) Emissions Summary

Source	PM	PM 10	CO	NOx	SO2	VOC
	t/yr	t/yr	t/yr	t/yr	t/yr	t/yr
Burners & Ovens	0.06	0.06	0.71	0.85	0.01	0.05
Facility Wide VOC						813.6
Cyclones and Baghouses	4.61	3.07				
Total	4.67	3.13	0.71	0.85	0.01	813.6

3.2VOC Emissions

Building	VOCs PTE
	Tons/year
1	0.98
2	495.85
3	3.68
4	313.10
5	0.00
Total	813.60

Facility wide PTE for VOC's is 813.6 tons/year; This represents the facility operating all processes 8,760 hours per year.

Facility emissions are calculated using purchase records and assuming 100% of the volatile components are emitted.

3.3Particulate Emissions

PARTICULATE	Em. Point	Bldg No.	PM Em. Factor	PM 10 Em. Factor	EFs Units	Throughput (annual)	Units	Particulate Emissions total (tons/yr)	PM10 Emissions total (tons/yr)
Baghouse N10 (10 bags)	P 3	1	0.001	0.001	lb/BDT	1,000	BDT	0.0005	0.001
Baghouse N 15 (15 bags)	P 4	1	0.001	0.001	lb/BDT	1,000	BDT	0.0005	0.001
Cyclone B	P 6	NA	0.9	0.6	lb/BDT	605	BDT	0.27	0.181
Cyclone F Closed	P 7	NA	0	0	lb/BDT	1,043	BDT	0.00	0.000
Cyclone C	P 8	NA	0.9	0.6	lb/BDT	417	BDT	0.19	0.125
Cyclone I	P 10	NA	0.9	0.6	lb/BDT	1,500	BDT	0.68	0.450
Baghouse G	P 11	NA	0.001	0.001	lb/BDT	341	BDT	0.0002	0.000
Baghouse E	P 12	NA	0.001	0.001	lb/BDT	2,257	BDT	0.0011	0.001
Cyclone H (closed)	P 14	NA	0	0	lb/BDT	1,500	BDT	0.00	0.000
Cyclone J	P 17	NA	0.9	0.6	lb/BDT	3,836	BDT	1.73	1.151
Cyclone K	P 18	NA	0.9	0.6	lb/BDT	3,836	BDT	1.73	1.151
Baghouse L	P 19	NA	0.001	0.001	lb/BDT	5,179	BDT	0.003	0.003
Baghouse M	P 20	NA	0.001	0.001	lb/BDT	6,585	BDT	0.003	0.003
Cyclone M1 (closed)	P 21	NA	0	0	lb/BDT	7,673	BDT	0.00	0.000
Cyclone M2 (closed)	P 22	NA	0	0	lb/BDT	11,764	BDT	0.00	0.000
Cyclone M4 (high-closed)	P 23	NA	0	0	lb/BDT	8,407	BDT	0.00	0.000
Cyclone M3 (closed)	P 24	NA	0	0	lb/BDT	171	BDT	0.00	0.000
Cyclone D	P 35	NA	0.9	0.6	lb/BDT	21	BDT	0.01	0.006
							Total	**4.61**	**3.07**

Emission factors for Cyclones are Department approved site specific as developed in the document *"Fruitland Idaho Facility Cyclone Particle Size Distribution And Cyclone Emission Factor Determination"* submitted on April 23, 2004 and approved by the Department on May 19, 2004.

Emission factors for baghouses are consistent with emission factors for the wood products industry as developed by the Oregon Department of Environmental Quality.

3.4Facility Natural Gas Emissions

BURNER and OVEN EMISSIONS

PM, PM 10, SOX, CO, NOX

Process Name	Em. Point	Bldg No.	Throughput (annual)	EFs Units	PM t/yr	PM 10 t/yr	CO t/yr	NOx t/yr	SOx t/yr	VOC t/yr
2 N.G. ovens (prime B1&2)	P 9	3	5.7537	lb/10^6 ft^3	0.0219	0.0219	0.2417	0.2877	0.001726	0.015823
North RF oven (B3)	P 28	2	3.869	lb/10^6 ft^3	0.0147	0.0147	0.1625	0.1935	0.001161	0.010641
South RF oven (B4)	P 29	2	1.593	lb/10^6 ft^3	0.0061	0.0061	0.0669	0.0797	0.000478	0.004381
Sum B3 & B4			5.4626		0.0208	0.0208	0.2294	0.2731	0.0016	0.0150
Buckley 5 hd printer (B5)	P 36	1	0.341	lb/10^6 ft^3	0.00130	0.00130	0.0143	0.0171	0.000102	0.000939
				Totals	**0.06468**	**0.06468**	**0.71485**	**0.85102**	**0.00511**	**0.04681**

Pollutant	Emission Factor	EF Units	Reference
PM	7.6	lb/10^6 cft	AP 42 Table 1.4-2 Condensable plus filterable
PM 10	7.6	lb/10^6 cft	AP 42 Table 1.4-2 Condensable plus filterable
CO	84	lb/10^6 cft	AP 42 Table 1.4-1, small and uncontrolled
NOx	100	lb/10^6 cft	AP 42 Table 1.4-1, small and uncontrolled
SO2	0.6	lb/10^6 cft	AP 42 Table 1.4-2
VOC	5.5	lb/10^6 cft	AP 42 Table 1.4-2

OVENS	Bldg	# of ea. Oven	Use Area	c. ft.	Total 10^6 cft
B5	1	1	5 HEAD	341,417	0.341
B3	2	2	NORTH	1,934,679	3.869
B4	2	2	SOUTH	796,634	1.593
B1	3	6	PRIME	940,805	5.645
B2	3	4	PRIME	27,213	0.109

4.0 APPLICABLE REQUIREMNTS

Listed in the Table below are the federal and state applicable requirements appropriate to this facility.

Potentially Applicable Requirements
Potentially applicable federal requirements are presented in the following table.
Federal Regulatory Requirements

Emission Unit	Citations under Federal Regulations	Applicable Requirement	Descriptions of Requirements or Standards
Facility Wide	40 CFR Part 52	Yes	Approval and Promulgation of Implementation Plans; Rules for Prevention of Significant Deterioration The Fruitland Facility is a major source with respect to the Prevention of Significant Deterioration program. Facility-wide emissions are greater than the applicability threshold.
Facility Wide	40 CFR Part 61, Subpart M	Yes	National Emission Standards for Hazardous Air Pollutants, Asbestos.
Affected Sources	40 CFR Part 63, Subpart KK	Yes	National Emission Standards for the Printing and Publishing Industry
Affected Sources	40 CFR Part 63, Subpart QQQQ	Yes	National Emission Standards for the Surface coating architectural products
Facility Wide	40 CFR Part 68	Yes	Chemical Accident Prevention Provisions Must develop a Risk Management Plan.
Facility Wide	40 CFR Part 70	Yes	State Operating Permit Program. The Fruitland facility is a major source with respect to Title V operating permit program.
Facility Wide	40 CFR Part 82	Yes	Chlorofluorocarbon Regulations.

Potentially Applicable Requirements
Potentially applicable State requirements are presented in the following table.
Idaho Regulatory Requirements

Emission Unit	Citation under IDAPA 58.01.01	Applicable Requirement	Description of Requirements or Standards
Facility Wide	121	Yes	COMPLIANCE REQUIREMENTS BY DEPARTMENT
Facility Wide	122	Yes	INFORMATION ORDERS BY THE DEPARTMENT
Facility Wide	123	Yes	CERTIFICATION OF DOCUMENTS
Facility Wide	124	Yes	TRUTH, ACCURACY AND COMPLETENESS OF DOCUMENTS
Facility Wide	125	Yes	FALSE STATEMENTS
Facility Wide	126	Yes	TAMPERING
Facility Wide	130	Yes	STARTUP, SHUTDOWN, SCHEDULED MAINTENANCE, SAFETY MEASURES, UPSET AND BREAKDOWN.
Facility Wide	131	Yes	EXCESS EMISSIONS . Applicability
Facility Wide	132	Yes	CORRECTION OF CONDITION. Excess emission events must be corrected with all practical speed.
Facility Wide	133	Yes	STARTUP, SHUTDOWN AND SCHEDULED MAINTENANCE REQUIREMENTS. Prescribes procedures for where startup, shutdown, or scheduled maintenance is expected to result in an excess emissions event.
Facility Wide	134	Yes	UPSET, BREAKDOWN AND SAFETY REQUIREMENTS. Prescribes procedures for when upset or breakdown or the initiation of safety measures is expected to result in an excess emissions event.
Facility Wide	135	Yes	EXCESS EMISSIONS REPORTS Written reports for each excess emissions must be submitted to the department within 15 days after the beginning of the event.
Facility Wide	136	Yes	EXCESS EMISSIONS RECORDS Records of excess emissions must be maintained for 5 years
Facility Wide	157	Yes	TEST METHODS AND PROCEDURES Establishes procedures and requirements for test methods and results
Facility Wide	161	Yes	TOXIC SUBSTANCES Toxic contaminants shall not be emitted as to injure or unreasonably affect human or animal life or vegetation.
Facility Wide	200	Yes	PROCEDURES AND REQUIREMENTS FOR PERMITS TO CONSTRUCT. Although the Fruitland facility is not requesting a PTC with this application, the facility must comply with the PTC rules when adding or modifying an air pollution source.
Facility Wide	201	Yes	PERMIT TO CONSTRUCT REQUIRED
Facility Wide	202	Yes	APPLICATION PROCEDURES
Facility Wide	203	Yes	PERMIT REQUIREMENTS FOR NEW AND MODIFIED STATIONARY SOURCES

Facility Wide	210	Yes	DEMONSTRATION OF PRECONSTRUCTION COMPLIANCE WITH TOXIC STANDARDS
Facility Wide	211	Yes	CONDITIONS FOR PERMITS TO CONSTRUCT
Facility Wide	212	Yes	OBLIGATION TO COMPLY
Facility Wide	213	Yes	PRE-PERMIT CONSTRUCTION
Facility Wide	214	No	DEMONSTRATION OF PRECONSTRUCTION COMPLIANCE FOR NEW AND RECONSTRUCTED MAJOR SOURCES OF HAZARDOUS AIR POLLUTANTS. The facility will have facility-wide HAP emission limits in effect. Therefore, the Fruitland facility is no longer a Major source of HAPs
Facility Wide	300	Yes	PROCEDURES AND REQUIREMENTS FOR TIER I OPERATING PERMITS. The Fruitland facility is a major source with respect to Tier I operating permit program. The volatile organic compound emissions exceed 100 tons per year.
Facility Wide	301	Yes	REQUIREMENT TO OBTAIN TIER I OPERATING PERMIT
Facility Wide	311	Yes	STANDARD PERMIT APPLICATIONS
Facility Wide	312	Yes	DUTY TO APPLY
Facility Wide	313	Yes	TIMELY APPLICATION
Facility Wide	314	Yes	REQUIRED STANDARD APPLICATION FORM AND REQUIRED INFORMATION
Facility Wide	315	Yes	DUTY TO SUPPLEMENT OR CORRECT APPLICATION
Facility Wide-Insignificant Sources	317	Yes	INSIGNIFICANT ACTIVITIES
Facility Wide-Insignificant Sources	317.01.b.i.(1)	Yes	Operation of Tanks less than 260 gallon capacity
Facility Wide-Insignificant Sources	317.01.b.i.(2)	Yes	Operation of Tanks less than 1,100 gallon capacity
Facility Wide-Insignificant Sources	317.01.b.i.(3)	Yes	Operation of Tanks less than 10,000 gallon capacity
Facility Wide-Insignificant Sources	317.01.b.i.(4)	Yes	Operation of Propane Tank less than 40,000 gal capacity
Facility Wide-Insignificant Sources	317.01.b.i.(15)	Yes	Batch solvent distillation, not greater than fifty-five (55) gallons batch capacity.
Facility Wide-Insignificant Sources	317.01.b.i.(18)	Yes	Space heaters and hot water heaters using natural gas, propane or kerosene and generating less than five million (5,000,000) Btu/hr.
Facility Wide-Insignificant Sources	317.01.b.i.(25)	Yes	Surface coating, aqueous solution or suspension containing less than one percent (1%) volatile organic compounds.
Facility Wide-Insignificant Sources	317.01.b.i.(30)	Yes	emission units or activities with potential emissions less than or equal to the significant emission rate as defined in Section 006 and actual emissions less than or equal to ten percent (10%) of the levels contained in Section 006 of the definition of significant and no more than one (1) ton per year of any hazardous air

			pollutant.
Facility Wide-Insignificant Sources	317.01.b.i.(9)	Yes	Welding
Facility Wide-Insignificant Sources	317.01.b.i.(27)	Yes	Storage and handling of water-based lubricants for metal working
Facility Wide	322	Yes	STANDARD CONTENTS OF TIER I OPERATING PERMITS
Facility Wide	332	Yes	EMERGENCY AS AN AFFIRMATIVE DEFENSE REGARDING EXCESS EMISSIONS
Facility Wide	368	Yes	EXPIRATION OF PRECEDING PERMITS
Facility Wide	369	Yes	TIER I OPERATING PERMIT RENEWAL
Facility Wide	387	Yes	REGISTRATION AND REGISTRATION FEES
Facility Wide	388	Yes	APPLICABILITY
Facility Wide	389	Yes	REGISTRATION
Facility Wide	390	Yes	REQUEST FOR INFORMATION
Facility Wide	391	Yes	REGISTRATION FEE
Facility Wide	392	Yes	REGISTRATION BY THE DEPARTMENT
Facility Wide	393	Yes	PAYMENT DUE
Facility Wide	377	Yes	AMBIENT AIR QUALITY STANDARDS FOR SPECIFIC POLLUTANTS
Facility Wide	585	Yes	TOXIC AIR POLLUTANTS NON-CARCINOGENIC INCREMENTS
Facility Wide	586	Yes	TOXIC AIR POLLUTANTS CARCINOGENIC INCREMENTS
Facility Wide	591	Yes/No	NATIONAL EMISSION STANDARDS FOR HAZARDOUS AIR POLLUTANTS The Fruitland facility was a major source of HAPs and became subject to NESHAP KK and QQQQ, however the facility is currently operating as a Minor source of HAPs and will not be subject to future NESHAPS.
Facility Wide	600	Yes	RULES FOR CONTROL OF FUGITIVE DUST.
Facility Wide	625	Yes	VISIBLE EMISSIONS A person shall not emit an air pollutant from any point of emission for a period or periods aggregating more that 3 minutes in any 60-minute period that is greater than 20% opacity. Prescribes test methods and procedures for performance testing.
Facility Wide	650	Yes	RULES FOR CONTROL OF FUGITIVE DUST.
Facility Wide	651	Yes	GENERAL RULES Reasonable precautions shall be taken to prevent particulate matter from becoming airborne.
Facility Wide	677	Yes	FUEL BURNING EQUIPMENT-PARTICULATE MATTER. STANDARDS FOR EXISTING SOURCES

Facility Wide	776	Yes	GENERAL RULES Odorous gases, liquids or solids shall not be emitted as to cause air pollution.

5.0 INSIGNIFICANT ACTIVITES

Listed below are the insignificant activities located at this source in accordance with IDAPA 58.01.01.317(b)(i)

Description	**Insignificant Activities** IDAPA 58.01.01.317.01(b)(I) Citation
Operation of Tanks less than 260 gallon capacity	IDAPA 58.01.01.317.01.b.i.(1)
Operation of Tanks less than 1,100 gallon capacity	IDAPA 58.01.01.317.01.b.i.(2)
Operation of Tanks less than 10,000 gallon capacity	IDAPA 58.01.01.317.01.b.i.(3)
Operation of Propane Tank less than 40,000 gal capacity	IDAPA 58.01.01.317.01.b.i.(4)
Batch solvent distillation, not greater than fifty-five (55) gallons batch capacity.	IDAPA 58.01.01.317.01.b.i.(15)
Space heaters and hot water heaters using natural gas, propane or kerosene and generating less than five million (5,000,000) Btu/hr.	IDAPA 58.01.01.317.01.b.i.(18)
Surface coating, aqueous solution or suspension containing less than one percent (1%) volatile organic compounds.	IDAPA 58.01.01.317.01.b.i.(25)
Emission units or activities with potential emissions less than or equal to the significant emission rate as defined in Section 006 and actual emissions less than or equal to ten percent (10%) of the levels contained in Section 006 of the definition of significant and no more than one (1) ton per year of any hazardous air pollutant.	IDAPA 58.01.01.317.01.b.i.(30)
Welding	IDAPA 58.01.01.317.01.b.i.(9)
Storage and handling of water-based lubricants for metal working	IDAPA 58.01.01.317.01.b.i.(27)

6.0 NESHAPS

Woodgrain's Fruitland facility has been operating as a minor source of HAPs for the past decade and intends to continue operating in that manner. This is reflected in the past and requested permit limits of 25 tpy combined HAPs and 10 tpy individual HAPs. Marinating this status will keep Woodgrain from triggering any additional NESHAP requirements unless new equipment is installed that triggers and existing or new MACT standard. Woodgrain is subject to two NESHAP subparts as a result of past Major HAP status. These subparts are discussed below.

6.140 CFR 63 Subpart KK - Printing and Publishing Industry

This subpart establishes compliance options, operating requirements, and work practice requirements for hazardous air pollutants (HAP) emitted from existing and new facilities at which publication rotogravure, product and packaging rotogravure, or wide-web flexographic printing presses are operated manufacturing facilities that are a major source of HAP emissions. This subpart also establishes requirements to demonstrate initial and continuous compliance with the compliance options, operating requirements, and work practice requirements for printing and publishing facilities that are a major source of HAP emissions. The requirements of this subpart which pertain to product and packaging rotogravure, or wide-web flexographic printing presses apply to this facility because the facility performs rotogravure printing on substrate which is applied to products manufactured at facility and facility-wide HAP emissions of the facility had exceeded major source thresholds at one time. The requirements of this subpart, which pertain to publication rotogravure, do not apply to this facility.

6.240 CFR 63 Subpart QQQQ- Surface Coating of Building Products

This subpart establishes national emission standards for hazardous air pollutants (NESHAP) for wood building products surface coating sources. This subpart also establishes requirements to demonstrate initial and continuous compliance with the emission limitations.

In accordance with 40 CFR 63.4681(a) and (b), the requirements of this subpart apply to this facility because the facility owns or operates an existing, surface coating of wood building products facility that is located at a major source of HAP emissions, and had used 1,110 gallons per year of coatings.

Woodgrain uses the compliant material option or the emission rate without add-on controls option for any of the coating operations, which it uses. Woodgrain has chosen to demonstrate compliance with the rolling 12-month emission rate limit of 1.93 lb HAP/gal solids using the compliant materials or emission rate without add-on controls options in 40 CFR 63.4741 and 40 CFR 63.4751, respectively. 40 CFR 63.4690(c) generally applies to Woodgrain.

6.0 PERMIT SHIELD

Within this Tier I operating permit renewal application, Woodgrain has identified rules that do not apply to the facility. Compliance with all conditions of the renewed permit will be considered as compliance with all regulatory requirements in effect as of the date of permit issuance. A requirement identified in as non-applicable is not enforceable by EPA, DEQ, or citizens. Woodgrain requests that the permit shield language contained in the existing Tier I operating permit, including 7.19, be retained and incorporated into the renewed Tier I operating permit.

APPENDIX A –Facility Maps

Aerial Photo of Woodgrain Millwork Inc. - Fruitland Facility

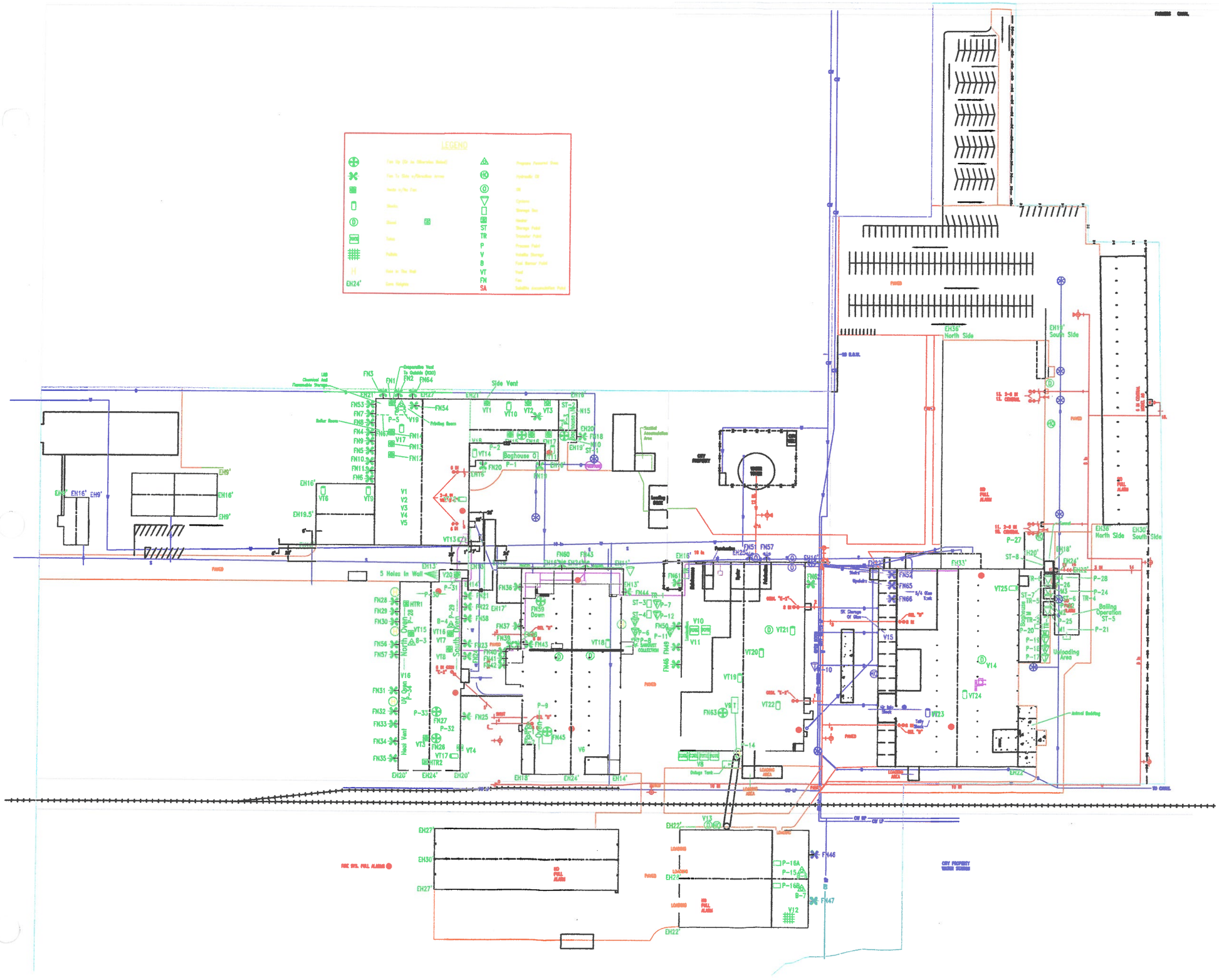
LEGEND
Side Vent
Baghouse
5 Holes in Wall
North Side
South Side
Boiling Operation
Unloading Area
Animal Bedding
CITY PROPERTY
WATER TOWER
LOADING AREA
FIRE SYS. FULL ALARMS
NO FULL ALARM
PAVED

APPENDIX B – DEQ FORMS

DEQ AIR QUALITY PROGRAM
1410 N. Hilton, Boise, ID 83706
For assistance, call the
Air Permit Hotline – 1-877-5PERMIT

Cover Sheet for Air Permit Application – Tier I **FormCS**
Revisi
08/2

Please see instructions on page 2 before filling out the form.

COMPANY NAME, FACILITY NAME, AND FACILITY ID NUMBER

1. Company Name	Woodgrain Millwork Inc.		
2. Facility Name	Fruitland Facility	3. Facility ID No.	075-00001
4. Brief Project Description - One sentence or less	This application is to renew Woodgrain Millwork 's Tier I permit.		

PERMIT APPLICATION TYPE

5. ☐ Initial Tier I ☐ Tier I Administrative Amendment ☐ Tier I Minor Modification ☐ Tier I Significant Modification
☒ Tier I Renewal: Permit No.:T1-060054Date Issued:July 6, 2007

FORMS INCLUDED

Included	N/A	Forms		DEQ Verify
☒	☐	Form CSTI – Cover Sheet		☐
☒	☐	Form GI – Facility Information		☐
☒	☐	Form EU0 – Emissions Units General		☐
☐	☐	Form EU1– Industrial Engine Information	Please specify number of EU1s attached: _____	☐
☐	☐	Form EU2– Nonmetallic Mineral Processing Plants	Please specify number of EU2s attached: _____	☐
☐	☐	Form EU3– Spray Paint Booth Information	Please specify number of EU3s attached: _____	☐
☐	☐	Form EU4– Cooling Tower Information	Please specify number of EU4s attached: _____	☐
☐	☐	Form EU5 – Boiler Information	Please specify number of EU5s attached: _____	☐
☐	☐	Form CBP– Concrete Batch Plant	Please Specify number of CBPs attached: _____	☐
☐	☐	Form HMAP – Hot Mix Asphalt Plant	Please specify number of HMAPs attached:	☐
☐	☐	PERF – Portable Equipment Relocation Form		☐
☒	☐	Form BCE– Baghouses Control Equipment		☐
☐	☐	Form SCE– Scrubbers Control Equipment		☐
☐	☐	Form VSCE – Venturi Scrubber Control Equipment		☐
☐	☐	Form ESP – Electrostatic Precipitator		☐
☐	☐	Form AO – Afterburner/Oxidizer		☐
☒	☐	Form CYS – Cyclone Separator		☐
☐	☐	Form CA – Carbon Adsorber		☐
☒	☐	Forms EI-CP1 - EI-CP4– Emissions Inventory– criteria pollutants	(Excel workbook, all 4 worksheets)	☐
☐	☐	Form CAM – Compliance Assurance Monitoring		☐
☒	☐	Form FRA – Federal Regulation Applicability		☐

NSPS/NESHAP Regulation Review and Applicability Form **FRA**

DEQ AIR QUALITY PROGRAM
1410 N. Hilton, Boise, ID 83706
For assistance, call the
Air Permit Hotline – 1-877-5PERMIT

General Information **Form**
Revisi
2/1

Please see instructions on page 2 before filling out the form.

All information is required. If information is missing, the application will not be processed.

IDENTIFICATION

1. Company Name	2. Facility Name:
Woodgrain Millworks Inc.	Fruitland Facility

3. Brief Project Description:	This permit application is for Tier I (Title V) renewal. No changes to the facility have taken place since the last T renewal. The facility and Potential to Emit remain substaintially the same.

FACILITY INFORMATION

4. Primary Facility Permit Contact Person/Title	Judy Toholsky		Senior Human Resource Manager	
5. Telephone Number and Email Address	208-452-8374		jtoholsky@woodgrain.com	
6. Alternate Facility Contact Person/Title	Mark Rawlings		Maintenance Manager	
7. Telephone Number and Email Address	208-452-3801 ext. 227		mrawlings@woodgrain.com	
8. Address to Which the Permit Should be Sent	P.O. Box 566			
9. City/County/State/Zip Code	Fruitland	Payette	ID	83609
10. Equipment Location Address (if different than the mailing address above)	300 NW 16th			
11. City/County/State/Zip Code	Fruitland	Payette	ID	83609
12. Is the Equipment Portable?	☐ Yes ☒ No			
13. SIC Code(s) and NAICS Code	Primary SIC: 2431	Secondary SIC:	NAICS: 321911	
14. Brief Business Description and Principal Product	Milling and finishing of wood door components, moldings, and window parts.			
15. Indentify any adjacent or contiguous facility that this company owns and/or operates	None			
16. Specify the reason for the application	☐ Permit to Construct (PTC) For Tier I permitted facilities only: If you are applying for a PTC then you must also specify how the PTC will be incorporated into the Tier I permit. ☐ Incorporate the PTC at the time of the Tier I renewal ☐ Co-process the Tier I modification and PTC ☐ Administratively amend the Tier I permit to incorporate the PTC upon your request (IDAPA 58.01.01.209.05.a, b, or c) ☒ Tier I Permit Renewal ☐ Tier II Permit ☐ Tier II/Permit to Construct			

CERTIFICATION

In accordance with **IDAPA 58.01.01.123 (Rules for the Control of Air Pollution in Idaho)**, I certify based on information and belief formed after reasonable inquiry, the statements and information in the document(s) are true, accurate, and complete.

17. Responsible Official's Name/Title	Phil Steklenski	Vice-President Millwork Division	
18. Responsible Official's Signature	Philip J. Steklenski	Date:	3/1/12

19. ☒ Check here to indicate that you would like to review the draft permit prior to final issuance.

DEQ AIR QUALITY PROGRAM
1410 N. Hilton, Boise, ID 83706
For assistance, call the
Air Permit Hotline – 1-877-5PERMIT

Baghouse Control Equipment**Form B(**
Revisi
2/1

Complete this form for each baghouse. Please see instructions on page 2 before filling out the form.

IDENTIFICATION

1. Company Name	2. Facility Name:
Woodgrain Millwork Inc.	Fruitland Facility

3. Brief Project Description: Woodgrain Millwork Inc. Tier I permit renewal.

BAGHOUSE INFORMATION

4. Baghouse Manufacturer: Pneumafil Corp	5. Baghouse Model: 135	6. Baghouse Equipment ID: Baghouse E (P1

7 (a). Baghouse particulate matter emission concentration. **Note: Provide information in 7(a)-(c) or answer question #8 below.**	0.001 lb/Bone Dry Ton gr/dscf	*Manufacturers typically provide guarantees in grains per dry standard cubic fc (gr/dscf). Provide a copy of the guarantee, or other documentation, with the application along with a description of the types of bags that must be used to achieve the emission concentration.* ***Emission concentrations less than 0.0 gr/dscf will receive additional scrutiny by DEQ and a source test of the baghouse may be required.*** *If a guarantee is not provided then you must document how you obtained the emission concentration. Without documentat the application is not complete.*
7 (b). Percentage PM_{10} Or Provide PM_{10} Emission Concentration	_____ % _____ gr/dscf	*What percentage of the PM concentration listed in question #7(a) is PM_{10}. You must provide documentation as to how the percentage was determined (i.e pe the baghouse manufacturer). Without documentation the application is not complete.*
7 (c). Baghouse flow rate	38602 dscfm	*Provide the baghouse flow rate in dry standard cubic feet per minute. Actual cubic feet per minute may be given in lieu of dscfm* ***if it is documented*** *that moisture content is insignificant. You must provide documentation as to how t flow rate was determined (i.e. per the exhaust fan manufacturer, combustion evaluation, etc.). Without documentation the application is not complete.*
8. Baghouse particulate matter control efficiency. **Note: Not needed if section #7 is completed.**	_____ % PM control _____ % PM_{10} control	*Applicant's providing the control efficiency of the baghouse must provide cont efficiency for both PM and PM_{10}. Provide a copy of the control efficiency documentation with the application. Documentation must include a descriptior the types of bags that must be used to achieve the control efficiency. Without documentation the application is not complete.*
9. Is the baghouse equipped with a bag leak detector?	☒ Yes ☐ No	*If a bag leak detector is installed provide documentation on the leak detector, including; how the leak detector functions and what level of the output signal indicates that a bag is leaking. Without documentation the application is not complete.*

STATE OF IDAHO
DEPARTMENT OF
ENVIRONMENTAL QUALITY

Version 1, August 2010

Facility Wide Potential to Emit Emission Inventory
Application Template and Instructions

For new stationary sources provide the facility's potential to emit for all NSR Regulated Air Pollutants. The potential to emit provided here must match the emissions rates which are requested to be permitted. For modifications to existing facilities (including the addition of new emissions units), if the existing facility classification is in question an existing facility wide potential to emit emission inventory will be required to be submitted[1]. Contact DEQ to determine if a facility wide emission inventory for the existing facility is required.

All emissions inventories must be submitted with thorough documentation. The emission inventories will be subjected to technical review. Therefore, prepare your application with sufficient documentation so that the public and DEQ can verify the validity of the emission estimates. **Applications submitted without sufficient documentation are incomplete. Follow the instructions provided on page 2;do not proceed until you have read the instructions.**

Applicants must use the Potential to Emit Summary table provided below.

Table 1. POTENTIAL TO EMIT FOR NSR REGULATED POLLUTANTS

Emissions Unit	PM	PM 10	CO	NOx	SO2	VOC
	T/yr	T/yr	T/yr	T/yr	T/yr	T/yr
Point Sources						
Burners & Ovens	0.06	0.06	0.71	0.85	0.01	0.05
Facility Wide VOC						813.6
Cyclones and Baghouses	4.61	3.07				
Totals	4.67	3.13	0.71	0.85	0.01	813.6

a) NSR Regulated air Pollutants are defined[2] as: Particulate Matter (PM, PM-10, PM-2.5), Carbon Monoxide, Lead, Nitrogen Dioxide, Ozone (VOC), Sulfur Dioxide, CO_2e[3], Green House Gases (GHG) mass, all pollutants regulated by NSPS (40 CFR 60)(i.e. TRS, fluoride, sulfuric acid mist) &Class I & Class II Ozone Depleting Substances (40 CFR 82)(i.e. CFC, HCFC, Halon, etc.)

Applicants are encouraged to call DEQ's Air Quality Permit Hotline (1-877-573-7648)to ask questions as they prepare the application.**Emission Inventory Instructions:**

1. Use the same emission unit name throughout the application (i.e. in air pollution control equipment forms and for modeling purposes).
2. The application must **show in detail all calculations** used to develop the PTE summary.

---

[1] The applicant must determine if the existing facility is a major facility. If the facility is an existing PSD major facility and changes are being made to the facility the major modification test must be conducted.

[2] 40 CFR 52.21(b)(50), as incorporated by reference at IDAPA 58.01.01.107.03.d

[3] Multiply each green house gas (GHG) by the global warming potential (GWP) listed at 40 CFR 98, Table A- 1 of Subpart A then sum all values to determine CO_2e (GHGs are carbon dioxide, nitrous oxide, methane, hydrofluorcarbons, perfluorcarbons, sulfur hexafluoride). Be sure to show all calculations as described in the instructions.

DEQ AIR QUALITY PROGRAM
1410 N. Hilton, Boise, ID 83706
For assistance, call the
Air Permit Hotline – 1-877-5PERMIT

AIR PERMIT APPLICATIC

Revisic
10/7

For each box in the table below, CTRL+click on the blue underlined text for instructions and information.

IDENTIFICATION	
1. Company Name: Woodgrain Millwork Inc.	2. Facility Name: Fruitland Facility
3. Brief Project Description: Tier I (Title V) Permit Renewal Application - Permit T1-060054 Facility #075-00001	

APPLICABILITY DETERMINATION	
4. List applicable subparts of the New Source Performance Standards (NSPS) (40 CFR part 60). Examples of NSPS affected emissions units include internal combustion engines, boilers, turbines, etc. The applicant must thoroughly review the list of affected emissions units.	List of applicable subpart(s): None ☐ Not Applicable
5. List applicable subpart(s) ofthe National Emission Standards for Hazardous Air Pollutants (NESHAP) found in 40 CFR part 61 and 40 CFR part 63. Examples of affected emission units include solvent cleaning operations, industrial cooling towers, paint stripping and miscellaneous surface coating. EPA has a web page dedicated to NESHAP that should be useful to applicants.	List of applicable subpart(s): 40 CFR 63 Subpart KK 40 CFR 63 Subpart QQQQ DEQ has already Completed regulatory Review for these Subparts in the previous Tier I and Tier II Permits. ☐ Not Applicable
6. For each subpart identified above, conduct a complete a regulatory analysis using the instructions and referencing the example provided on the following pages. **Note** - Regulatory reviews must be submitted with sufficient detail so that DEQ can verify applicability and document in legal terms why the regulation applies. Regulatory reviews that are submitted with insufficient detail will be determined incomplete.	☐ A detailed regulatory review is provided (Follow instructions and example). ☐ DEQ has already been provided a detailed regulatory review. Give a reference to the document including the date.

IF YOU ARE UNSURE HOW TO ANSWER ANY OF THESE QUESTIONS, CALL THE AIR PERMIT HOTLINE AT 1-877-5PERMIT

It is emphasized that it is the applicant's responsibility to satisfy all technical and regulatory requirements, and that DEQ will help the applicant understand what those requirements are prior to the application being submitted but that DEQ will not perform the required technical or regulatory analysis on the applicant's behalf.

DEQ AIR QUALITY PROGRAM
1410 N. Hilton, Boise, ID 83706
For assistance, call the
Air Permit Hotline – 1-877-5PERMIT

Baghouse Control Equipment **Form B(**
Revisi
2/1

Complete this form for each baghouse. Please see instructions on page 2 before filling out the form.

IDENTIFICATION

1. Company Name	2. Facility Name:
Woodgrain Millwork Inc.	Fruitland Facility

3. Brief Project Description: Woodgrain Millwork Inc. Tier I permit renewal.

BAGHOUSE INFORMATION

4. Baghouse Manufacturer: Pneumafil Corp	5. Baghouse Model: 135?	6. Baghouse Equipment ID: Baghouse G

7 (a). Baghouse particulate matter emission concentration. **Note: Provide information in 7(a)-(c) or answer question #8 below.**	0.001 lb/Bone Dry Ton gr/dscf	*Manufacturers typically provide guarantees in grains per dry standard cubic fc (gr/dscf). Provide a copy of the guarantee, or other documentation, with the application along with a description of the types of bags that must be used to achieve the emission concentration.* ***Emission concentrations less than 0.(gr/dscf will receive additional scrutiny by DEQ and a source test of the baghouse may be required.*** *If a guarantee is not provided then you must document how you obtained the emission concentration. Without documentat the application is not complete.*
7 (b). Percentage PM_{10} Or Provide PM_{10} Emission Concentration	_____ % _____ gr/dscf	*What percentage of the PM concentration listed in question #7(a) is PM_{10}. Yo must provide documentation as to how the percentage was determined (i.e pe the baghouse manufacturer). Without documentation the application is not complete.*
7 (c). Baghouse flow rate	34000 dscfm	*Provide the baghouse flow rate in dry standard cubic feet per minute. Actual cubic feet per minute may be given in lieu of dscfm* ***if it is documented*** *that moisture content is insignificant. You must provide documentation as to how t flow rate was determined (i.e. per the exhaust fan manufacturer, combustion evaluation, etc.). Without documentation the application is not complete.*
8. Baghouse particulate matter control efficiency. **Note: Not needed if section #7 is completed.**	_____ % PM control _____ % PM_{10} control	*Applicant's providing the control efficiency of the baghouse must provide cont efficiency for both PM and PM_{10}. Provide a copy of the control efficiency documentation with the application. Documentation must include a descriptio the types of bags that must be used to achieve the control efficiency. Without documentation the application is not complete.*
9. Is the baghouse equipped with a bag leak detector?	☒ Yes ☐ No	*If a bag leak detector is installed provide documentation on the leak detector, including; how the leak detector functions and what level of the output signal indicates that a bag is leaking. Without documentation the application is not complete.*

DEQ AIR QUALITY PROGRAM
1410 N. Hilton, Boise, ID 83706
For assistance, call the
Air Permit Hotline – 1-877-5PERMIT

Baghouse Control Equipment **Form B(**
Revisi
2/1

Complete this form for each baghouse. Please see instructions on page 2 before filling out the form.

IDENTIFICATION

1. Company Name	2. Facility Name:
Woodgrain Millwork Inc.	Fruitland Facility

3. Brief Project Description: Woodgrain Millwork Inc. Tier I permit renewal.

BAGHOUSE INFORMATION

4. Baghouse Manufacturer: MAC	5. Baghouse Model: 144MCF494	6. Baghouse Equipment ID: Baghouse M (P2

7 (a). Baghouse particulate matter emission concentration. **Note: Provide information in 7(a)-(c) or answer question #8 below.**	0.001 lb/Bone Dry Ton gr/dscf	*Manufacturers typically provide guarantees in grains per dry standard cubic fc (gr/dscf). Provide a copy of the guarantee, or other documentation, with the application along with a description of the types of bags that must be used to achieve the emission concentration.* ***Emission concentrations less than 0.(gr/dscf will receive additional scrutiny by DEQ and a source test of the baghouse may be required.*** *If a guarantee is not provided then you must document how you obtained the emission concentration. Without documentat the application is not complete.*
7 (b). Percentage PM_{10} Or Provide PM_{10} Emission Concentration	_____ % _____ gr/dscf	*What percentage of the PM concentration listed in question #7(a) is PM_{10}. Yo must provide documentation as to how the percentage was determined (i.e pe the baghouse manufacturer). Without documentation the application is not complete.*
7 (c). Baghouse flow rate	45500 dscfm	*Provide the baghouse flow rate in dry standard cubic feet per minute. Actual cubic feet per minute may be given in lieu of dscfm* ***if it is documented*** *that moisture content is insignificant. You must provide documentation as to how t flow rate was determined (i.e. per the exhaust fan manufacturer, combustion evaluation, etc.). Without documentation the application is not complete.*
8. Baghouse particulate matter control efficiency. **Note: Not needed if section #7 is completed.**	_____ % PM control _____ % PM_{10} control	*Applicant's providing the control efficiency of the baghouse must provide cont efficiency for both PM and PM_{10}. Provide a copy of the control efficiency documentation with the application. Documentation must include a descriptio the types of bags that must be used to achieve the control efficiency. Without documentation the application is not complete.*
9. Is the baghouse equipped with a bag leak detector?	☒ Yes ☐ No	*If a bag leak detector is installed provide documentation on the leak detector, including; how the leak detector functions and what level of the output signal indicates that a bag is leaking. Without documentation the application is not complete.*

DEQ AIR QUALITY PROGRAM
1410 N. Hilton, Boise, ID 83706
For assistance, call the
Air Permit Hotline – 1-877-5PERMIT

Baghouse Control Equipment **Form B(**
Revisi
2/1

Complete this form for each baghouse. Please see instructions on page 2 before filling out the form.

IDENTIFICATION

1. Company Name	2. Facility Name:
Woodgrain Millwork Inc.	Fruitland Facility

3. Brief Project Description: Woodgrain Millwork Inc. Tier I permit renewal.

BAGHOUSE INFORMATION

4. Baghouse Manufacturer: Pneumafil Corp.	5. Baghouse Model: 135	6. Baghouse Equipment ID: Baghouse L (P1

7 (a). Baghouse particulate matter emission concentration. **Note: Provide information in 7(a)-(c) or answer question #8 below.**	0.001 lb/Bone Dry Ton gr/dscf	*Manufacturers typically provide guarantees in grains per dry standard cubic fc (gr/dscf). Provide a copy of the guarantee, or other documentation, with the application along with a description of the types of bags that must be used to achieve the emission concentration.* ***Emission concentrations less than 0.(gr/dscf will receive additional scrutiny by DEQ and a source test of the baghouse may be required.*** *If a guarantee is not provided then you must document how you obtained the emission concentration. Without documentat the application is not complete.*
7 (b). Percentage PM_{10} Or Provide PM_{10} Emission Concentration	_____ % _____ gr/dscf	*What percentage of the PM concentration listed in question #7(a) is PM_{10}. Yo must provide documentation as to how the percentage was determined (i.e pe the baghouse manufacturer). Without documentation the application is not complete.*
7 (c). Baghouse flow rate	45500 dscfm	*Provide the baghouse flow rate in dry standard cubic feet per minute. Actual cubic feet per minute may be given in lieu of dscfm* ***if it is documented*** *that moisture content is insignificant. You must provide documentation as to how t flow rate was determined (i.e. per the exhaust fan manufacturer, combustion evaluation, etc.). Without documentation the application is not complete.*
8. Baghouse particulate matter control efficiency. **Note: Not needed if section #7 is completed.**	_____ % PM control _____ % PM_{10} control	*Applicant's providing the control efficiency of the baghouse must provide cont efficiency for both PM and PM_{10}. Provide a copy of the control efficiency documentation with the application. Documentation must include a descriptio the types of bags that must be used to achieve the control efficiency. Without documentation the application is not complete.*
9. Is the baghouse equipped with a bag leak detector?	☒ Yes ☐ No	*If a bag leak detector is installed provide documentation on the leak detector, including; how the leak detector functions and what level of the output signal indicates that a bag is leaking. Without documentation the application is not complete.*

DEQ AIR QUALITY PROGRAM
1410 N. Hilton, Boise, ID 83706
For assistance, call the
Air Permit Hotline – 1-877-5PERMIT

Baghouse Control Equipment **Form B(**
Revisi
2/1

Complete this form for each baghouse. Please see instructions on page 2 before filling out the form.

IDENTIFICATION

1. Company Name	2. Facility Name:
Woodgrain Millwork Inc.	Fruitland Facility

3. Brief Project Description: Woodgrain Millwork Inc. Tier I permit renewal.

BAGHOUSE INFORMATION

4. Baghouse Manufacturer: ??????????	5. Baghouse Model: ????	6. Baghouse Equipment ID: Baghouse N10 (I

7 (a). Baghouse particulate matter emission concentration. **Note: Provide information in 7(a)-(c) or answer question #8 below.**	0.001 lb/Bone Dry Ton gr/dscf	*Manufacturers typically provide guarantees in grains per dry standard cubic fo (gr/dscf). Provide a copy of the guarantee, or other documentation, with the application along with a description of the types of bags that must be used to achieve the emission concentration.* ***Emission concentrations less than 0.(gr/dscf will receive additional scrutiny by DEQ and a source test of the baghouse may be required.*** *If a guarantee is not provided then you must document how you obtained the emission concentration. Without documentat the application is not complete.*
7 (b). Percentage PM_{10} Or Provide PM_{10} Emission Concentration	_____ % _____ gr/dscf	*What percentage of the PM concentration listed in question #7(a) is PM_{10}. Yo must provide documentation as to how the percentage was determined (i.e pe the baghouse manufacturer). Without documentation the application is not complete.*
7 (c). Baghouse flow rate	_____ dscfm	*Provide the baghouse flow rate in dry standard cubic feet per minute. Actual cubic feet per minute may be given in lieu of dscfm* ***if it is documented*** *that moisture content is insignificant. You must provide documentation as to how t flow rate was determined (i.e. per the exhaust fan manufacturer, combustion evaluation, etc.). Without documentation the application is not complete.*
8. Baghouse particulate matter control efficiency. **Note: Not needed if section #7 is completed.**	_____ % PM control _____ % PM_{10} control	*Applicant's providing the control efficiency of the baghouse must provide cont efficiency for both PM and PM_{10}. Provide a copy of the control efficiency documentation with the application. Documentation must include a descriptio the types of bags that must be used to achieve the control efficiency. Without documentation the application is not complete.*
9. Is the baghouse equipped with a bag leak detector?	☒ Yes ☐ No	*If a bag leak detector is installed provide documentation on the leak detector, including; how the leak detector functions and what level of the output signal indicates that a bag is leaking. Without documentation the application is not complete.*

DEQ AIR QUALITY PROGRAM
1410 N. Hilton, Boise, ID 83706
For assistance, call the
Air Permit Hotline – 1-877-5PERMIT

Baghouse Control Equipment **Form B(**
Revisi
2/1

Complete this form for each baghouse. Please see instructions on page 2 before filling out the form.

IDENTIFICATION

1. Company Name	2. Facility Name:
Woodgrain Millwork Inc.	Fruitland Facility

3. Brief Project Description: Woodgrain Millwork Inc. Tier I permit renewal.

BAGHOUSE INFORMATION

4. Baghouse Manufacturer: ??????????	5. Baghouse Model: ????	6. Baghouse Equipment ID: Baghouse N15 (I

7 (a). Baghouse particulate matter emission concentration. **Note: Provide information in 7(a)-(c) or answer question #8 below.**	0.001 lb/Bone Dry Ton gr/dscf	*Manufacturers typically provide guarantees in grains per dry standard cubic fo (gr/dscf). Provide a copy of the guarantee, or other documentation, with the application along with a description of the types of bags that must be used to achieve the emission concentration.* ***Emission concentrations less than 0.(gr/dscf will receive additional scrutiny by DEQ and a source test of the baghouse may be required.*** *If a guarantee is not provided then you must document how you obtained the emission concentration. Without documentat the application is not complete.*
7 (b). Percentage PM_{10} Or Provide PM_{10} Emission Concentration	_____ % _____ gr/dscf	*What percentage of the PM concentration listed in question #7(a) is PM_{10}. Yo must provide documentation as to how the percentage was determined (i.e pe the baghouse manufacturer). Without documentation the application is not complete.*
7 (c). Baghouse flow rate	_____ dscfm	*Provide the baghouse flow rate in dry standard cubic feet per minute. Actual cubic feet per minute may be given in lieu of dscfm* ***if it is documented*** *that moisture content is insignificant. You must provide documentation as to how t flow rate was determined (i.e. per the exhaust fan manufacturer, combustion evaluation, etc.). Without documentation the application is not complete.*
8. Baghouse particulate matter control efficiency. **Note: Not needed if section #7 is completed.**	_____ % PM control _____ % PM_{10} control	*Applicant's providing the control efficiency of the baghouse must provide cont efficiency for both PM and PM_{10}. Provide a copy of the control efficiency documentation with the application. Documentation must include a descriptio the types of bags that must be used to achieve the control efficiency. Without documentation the application is not complete.*
9. Is the baghouse equipped with a bag leak detector?	☐ Yes ☒ No	*If a bag leak detector is installed provide documentation on the leak detector, including; how the leak detector functions and what level of the output signal indicates that a bag is leaking. Without documentation the application is not complete.*

DEQ AIR QUALITY PROGRAM
1410 N. Hilton, Boise, ID 83706
For assistance, call the
Air Permit Hotline: 1-877-5PERMIT

Cyclone Separator- **Form CYS**
Revision 2
08/28/08

Please see instructions on page 37 before filling out the form.

IDENTIFICATION

1. Company Name:	Woodgrain Millwork Inc.	2. Facility Name:	Fruitland Facility	3. Facility ID No.:	75-00001
4. Brief Project Description:	Woodgrain Millwork Inc. Tier I permit renewal.				

CYCLONE SEPARATOR INFORMATION

Equipment Description

5. Manufacturer: Self

6. Model Number: Millwork Cyclone H (P14)

7. Dimensions

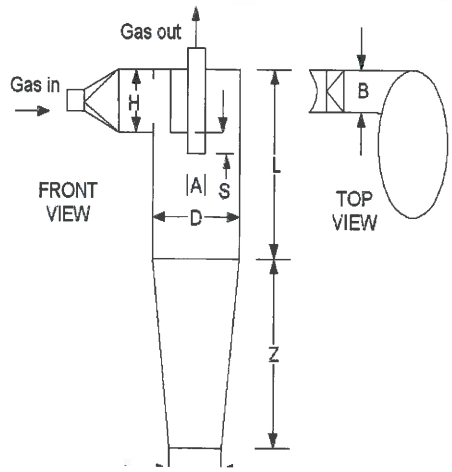

Give dimensions of cyclone. (See sample diagram above.)

1. B: 30 in.
2. H: 16 in.
3. S: 18 in.
4. L: 36 in.
5. Z: 72 in.
6. D: 66 in.
7. A: 28.3 in.
8. J: 6 in.

8. Particulate Size Distribution Data

Micron range	Particle size distribution weight %	Manufacturer's guaranteed removal efficiency for each micron range
0.5-1.0	0	NA
1.0-5.0	0.01%	56.9%
5-10	0.1%	73.8%
10-20	0.12%	89.9%
Over 20	99.78%	99.7%

9. Type of Cyclone: ☐ Wet ☒ Dry

10. Type of Cyclone Unit: ☒ Single ☐ Quadruple ☐ Dual ☐ Multiclone

11. Blower: Blower horsepower: hp
Design flow rate: 12,167 scfm
Draft: ☒ Forced ☐ Induced

12. Design Criteria: Cyclone configuration: ☒ Positive pressure ☐ Negative pressure

13. Pre-Treatment Device: ☐ Cyclone ☐ Knock-out chamber ☐ Precooler ☒ None ☐ Preheater

14. Post-Treatment Device: ☒ Baghouse/Cartridge ☐ HEPA ☐ Other:

Process Stream Characteristics	
15. Brief Description of Process	.Woodgrain operates this process equipment for the primary purpose collecting wood shavings from moulder, planers and wood shapping equipment for the purpose of selling the collected shaving as animal bedding or to other facilites to process into consumer products. This cyclone services the Equipment in Building 6.
16. Flow Data	Gas stream temperature: 75 degrees F Moisture content: Ambient grams of water/cubic feet (ft^3) of dry air Pressure drop range High: Unk in. H_2O Low: Unk in. H_2O Dew point temperature of process stream: Ambient degrees F Inlet flow rate: 12,167 ACFM
17. Dust Collection Device	☐ Pneumatic conveyor ☒ Rotary airlock values ☐ Screw conveyors ☐ Closed container ☐ Double dump ☐ Drag conveyor ☐ Manual discharge device: ☐ Slide gate OR ☐ Hinged doors or drawers
18. Operating Schedule	Normal: 24 hours/day 7 days/week 50 weeks/year Maximum: 24 hours/day 7 days/week 50 weeks/year

Please see instructions on page 37 before filling out the form.

IDENTIFICATION

1. Company Name:	Woodgrain Millwork Inc.	2. Facility Name:	Fruitland Facility	3. Facility ID No.:	75-00001
4. Brief Project Description:	Woodgrain Millwork Inc. Tier I permit renewal.				

CYCLONE SEPARATOR INFORMATION

Equipment Description

5. Manufacturer: Self

6. Model Number: Millwork Cyclone B

7. Dimensions

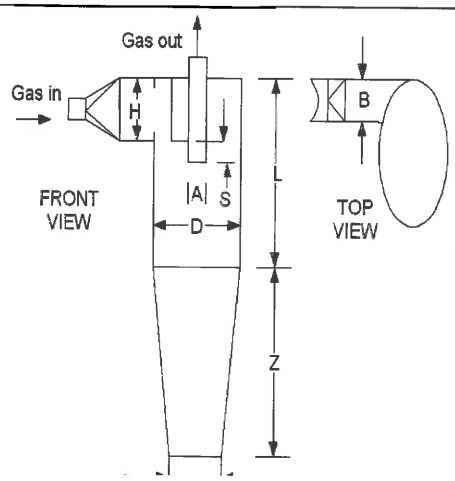

Give dimensions of cyclone. (See sample diagram above.)

1. B: 18 in.
2. H: 48 in.
3. S: 48 in.
4. L: 72 in.
5. Z: 192 in.
6. D: 132 in.
7. A: 48 in.
8. J: 9 in.

8. Particulate Size Distribution Data

Micron range	Particle size distribution weight %	Manufacturer's guaranteed removal efficiency for each micron range
0.5-1.0	0	NA
1.0-5.0	0.01%	51.4%
5-10	0.1%	69%
10-20	0.12%	87.1%
Over 20	99.78%	99.5%

9. Type of Cyclone: ☐ Wet ☒ Dry

10. Type of Cyclone Unit: ☒ Single ☐ Dual ☐ Quadruple ☐ Multiclone

11. Blower
Blower horsepower: hp
Design flow rate: 21,100 scfm
Draft: ☒ Forced ☐ Induced

12. Design Criteria
Cyclone configuration: ☒ Positive pressure ☐ Negative pressure

13. Pre-Treatment Device
☐ Cyclone ☐ Knock-out chamber
☐ Precooler ☒ None
☐ Preheater

14. Post-Treatment Device
☐ Baghouse/Cartridge
☐ HEPA
☐ Other:

Process Stream Characteristics	
15. Brief Description of Process	.Woodgrain operates this process equipment for the primary purpose collecting wood shavings from moulder, planers and wood shapping equipment for the purpose of selling the collected shaving as animal bedding or to other facilites to process into consumer products. This cyclone services the 5/4 building equipment.
16. Flow Data	Gas stream temperature: 75 degrees F Moisture content: Ambient grams of water/cubic feet (ft^3) of dry air <u>Pressure drop range</u> High: Unk in. H_2O Low: Unk in. H_2O Dew point temperature of process stream: Ambient degrees F Inlet flow rate: 21,100 ACFM
17. Dust Collection Device	☐ Pneumatic conveyor ☒ Rotary airlock values ☐ Screw conveyors ☐ Closed container ☐ Double dump ☐ Drag conveyor ☐ Manual discharge device: ☐ Slide gate OR ☐ Hinged doors or drawers
18. Operating Schedule	Normal: 24 hours/day 7 days/week 50 weeks/year Maximum: 24 hours/day 7 days/week 50 weeks/year

DEQ AIR QUALITY PROGRAM
1410 N. Hilton, Boise, ID 83706
For assistance, call the
Air Permit Hotline: 1-877-5PERMIT

Cyclone Separator- **Form CYS**
Revision 2
08/28/08

Please see instructions on page 37 before filling out the form.

IDENTIFICATION

1. Company Name:	Woodgrain Millwork Inc.	2. Facility Name:	Fruitland Facility	3. Facility ID No.:	75-00001
4. Brief Project Description:	Woodgrain Millwork Inc. Tier I permit renewal.				

CYCLONE SEPARATOR INFORMATION

Equipment Description

5. Manufacturer: Self

6. Model Number: Millwork Cyclone C

7. Dimensions

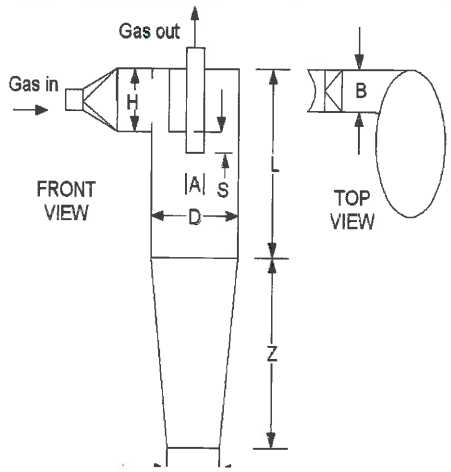

Give dimensions of cyclone. (See sample diagram above.)

1. B: 18 in.
2. H: 48 in.
3. S: 48 in.
4. L: 72 in.
5. Z: 240 in.
6. D: 120 in.
7. A: 48 in.
8. J: 14 in.

8. Particulate Size Distribution Data

Micron range	Particle size distribution weight %	Manufacturer's guaranteed removal efficiency for each micron range
0.5-1.0	0	NA
1.0-5.0	0.01%	52.3%
5-10	0.1%	69.7%
10-20	0.12%	87.5%
Over 20	99.78%	99.5%

9. Type of Cyclone: ☐ Wet ☒ Dry

10. Type of Cyclone Unit: ☒ Single ☐ Dual ☐ Quadruple ☐ Multiclone

11. Blower: Blower horsepower: hp
Design flow rate: 19,242 scfm
Draft: ☒ Forced ☐ Induced

12. Design Criteria: Cyclone configuration: ☒ Positive pressure ☐ Negative pressure

13. Pre-Treatment Device: ☐ Cyclone ☐ Knock-out chamber ☐ Precooler ☒ None ☐ Preheater

14. Post-Treatment Device: ☐ Baghouse/Cartridge ☐ HEPA ☐ Other:

Process Stream Characteristics	
15. Brief Description of Process	.Woodgrain operates this process equipment for the primary purpose collecting wood shavings from moulder, planers and wood shapping equipment for the purpose of selling the collected shaving as animal bedding or to other facilites to process into consumer products. This cyclone services the ……..
16. Flow Data	Gas stream temperature: 75 degrees F Moisture content: Ambient grams of water/cubic feet (ft^3) of dry air <u>Pressure drop range</u> High: Unk in. H_2O Low: Unk in. H_2O Dew point temperature of process stream: Ambient degrees F Inlet flow rate: 19,242 ACFM
17. Dust Collection Device	☐ Pneumatic conveyor ☒ Rotary airlock values ☐ Screw conveyors ☐ Closed container ☐ Double dump ☐ Drag conveyor ☐ Manual discharge device: ☐ Slide gate OR ☐ Hinged doors or drawers
18. Operating Schedule	Normal: 24 hours/day 7 days/week 50 weeks/year Maximum: 24 hours/day 7 days/week 50 weeks/year

DEQ AIR QUALITY PROGRAM
1410 N. Hilton, Boise, ID 83706
For assistance, call the
Air Permit Hotline: 1-877-5PERMIT

Cyclone Separator- **Form CYS**
Revision 2
08/28/08

Please see instructions on page 37 before filling out the form.

IDENTIFICATION

1. Company Name:	Woodgrain Millwork Inc.	2. Facility Name:	Fruitland Facility	3. Facility ID No.:	75-00001
4. Brief Project Description:	Woodgrain Millwork Inc. Tier I permit renewal.				

CYCLONE SEPARATOR INFORMATION

Equipment Description

5. Manufacturer: Self

6. Model Number: Millwork Cyclone D

7. Dimensions

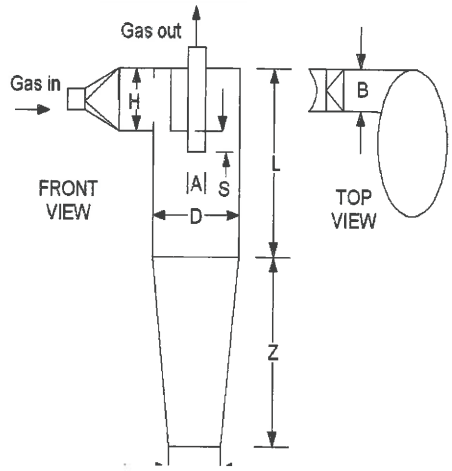

Give dimensions of cyclone. (See sample diagram above.)

1. B: 18 in.
2. H: 48 in.
3. S: 48 in.
4. L: 72 in.
5. Z: 240 in.
6. D: 120 in.
7. A: 48 in.
8. J: 12.5 in.

8. Particulate Size Distribution Data

Micron range	Particle size distribution weight %	Manufacturer's guaranteed removal efficiency for each micron range
0.5-1.0	0	NA
1.0-5.0	0.01%	52.6%
5-10	0.1%	70%
10-20	0.12%	87.7%
Over 20	99.78%	99.6%

9. Type of Cyclone: ☐ Wet ☒ Dry

10. Type of Cyclone Unit: ☒ Single ☐ Quadruple ☐ Dual ☐ Multiclone

11. Blower
Blower horsepower: hp
Design flow rate: 19,242 scfm
Draft: ☒ Forced ☐ Induced

12. Design Criteria
Cyclone configuration: ☒ Positive pressure ☐ Negative pressure

13. Pre-Treatment Device
☐ Cyclone ☐ Knock-out chamber
☐ Precooler ☒ None
☐ Preheater

14. Post-Treatment Device
☐ Baghouse/Cartridge
☐ HEPA
☐ Other:

Process Stream Characteristics	
15. Brief Description of Process	.Woodgrain operates this process equipment for the primary purpose collecting wood shavings from moulder, planers and wood shapping equipment for the purpose of selling the collected shaving as animal bedding or to other facilites to process into consumer products. This cyclone services the .....
16. Flow Data	Gas stream temperature: 75 degrees F Moisture content: Ambient grams of water/cubic feet (ft^3) of dry air <u>Pressure drop range</u> High: Unk in. H_2O Low: Unk in. H_2O Dew point temperature of process stream: Ambient degrees F Inlet flow rate: 19,792 ACFM
17. Dust Collection Device	☐ Pneumatic conveyor ☒ Rotary airlock values ☐ Screw conveyors ☐ Closed container ☐ Double dump ☐ Drag conveyor ☐ Manual discharge device: ☐ Slide gate OR ☐ Hinged doors or drawers
18. Operating Schedule	Normal: 24 hours/day 7 days/week 50 weeks/year Maximum: 24 hours/day 7 days/week 50 weeks/year

DEQ AIR QUALITY PROGRAM
1410 N. Hilton, Boise, ID 83706
For assistance, call the
Air Permit Hotline: 1-877-5PERMIT

Cyclone Separator- **Form CYS**
Revision 2
08/28/08

Please see instructions on page 37 before filling out the form.

IDENTIFICATION

1. Company Name:	Woodgrain Millwork Inc.	2. Facility Name:	Fruitland Facility	3. Facility ID No.:	75-00001
4. Brief Project Description:	Woodgrain Millwork Inc. Tier I permit renewal.				

CYCLONE SEPARATOR INFORMATION

Equipment Description

5. Manufacturer: Self

6. Model Number: Millwork Cyclone I

7. Dimensions

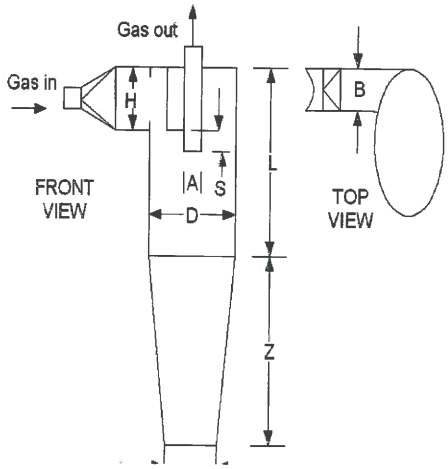

Give dimensions of cyclone. (See sample diagram above.)

1. B: 24 in.
2. H: 48 in.
3. S: 36 in.
4. L: 108 in.
5. Z: 288 in.
6. D: 150 in.
7. A: 40 in.
8. J: 12 in.

8. Particulate Size Distribution Data

Micron range	Particle size distribution weight %	Manufacturer's guaranteed removal efficiency for each micron range
0.5-1.0	0	NA
1.0-5.0	0.01%	53.7%
5-10	0.1%	71.45%
10-20	0.12%	88.9%
Over 20	99.78%	99.7%

9. Type of Cyclone: ☐ Wet ☒ Dry

10. Type of Cyclone Unit: ☒ Single ☐ Quadruple ☐ Dual ☐ Multiclone

11. Blower
Blower horsepower: hp
Design flow rate: 12,167 scfm
Draft: ☒ Forced ☐ Induced

12. Design Criteria
Cyclone configuration: ☒ Positive pressure ☐ Negative pressure

13. Pre-Treatment Device
☐ Cyclone ☐ Knock-out chamber
☐ Precooler ☒ None
☐ Preheater

14. Post-Treatment Device
☐ Baghouse/Cartridge
☐ HEPA
☐ Other:

Process Stream Characteristics	
15. Brief Description of Process	.Woodgrain operates this process equipment for the primary purpose collecting wood shavings from moulder, planers and wood shapping equipment for the purpose of selling the collected shaving as animal bedding or to other facilites to process into consumer products. This cyclone services the ……
16. Flow Data	Gas stream temperature: 75 degrees F Moisture content: Ambient grams of water/cubic feet (ft^3) of dry air <u>Pressure drop range</u> High: Unk in. H_2O Low: Unk in. H_2O Dew point temperature of process stream: Ambient degrees F Inlet flow rate: 12,167 ACFM
17. Dust Collection Device	☐ Pneumatic conveyor ☒ Rotary airlock values ☐ Screw conveyors ☐ Closed container ☐ Double dump ☐ Drag conveyor ☐ Manual discharge device: ☐ Slide gate OR ☐ Hinged doors or drawers
18. Operating Schedule	Normal: 24 hours/day 7 days/week 50 weeks/year Maximum: 24 hours/day 7 days/week 50 weeks/year

DEQ AIR QUALITY PROGRAM
1410 N. Hilton, Boise, ID 83706
For assistance, call the
Air Permit Hotline: 1-877-5PERMIT

Cyclone Separator- **Form CYS**
Revision 2
08/28/08

Please see instructions on page 37 before filling out the form.

IDENTIFICATION

1. Company Name:	Woodgrain Millwork Inc.	2. Facility Name:	Fruitland Facility	3. Facility ID No.:	75-00001
4. Brief Project Description:	Woodgrain Millwork Inc. Tier I permit renewal.				

CYCLONE SEPARATOR INFORMATION

Equipment Description

5. Manufacturer: Self

6. Model Number: Millwork Cyclone J

7. Dimensions

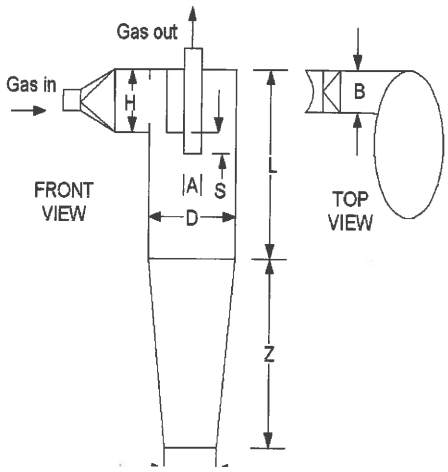

Give dimensions of cyclone. (See sample diagram above.)

1. B: 18 in.
2. H: 48 in.
3. S: 60 in.
4. L: 96 in.
5. Z: 144 in.
6. D: 132 in.
7. A: 36 in.
8. J: 16 in.

8. Particulate Size Distribution Data

Micron range	Particle size distribution weight %	Manufacturer's guaranteed removal efficiency for each micron range
0.5-1.0	0	NA
1.0-5.0	0.01%	60.85%
5-10	0.1%	78.1%
10-20	0.12%	92.9%
Over 20	99.78%	99.8%

9. Type of Cyclone: ☐ Wet ☒ Dry

10. Type of Cyclone Unit: ☒ Single ☐ Quadruple ☐ Dual ☐ Multiclone

11. Blower: Blower horsepower: hp
Design flow rate: 27,567 scfm
Draft: ☒ Forced ☐ Induced

12. Design Criteria: Cyclone configuration: ☒ Positive pressure ☐ Negative pressure

13. Pre-Treatment Device: ☐ Cyclone ☐ Knock-out chamber ☐ Precooler ☒ None ☐ Preheater

14. Post-Treatment Device: ☐ Baghouse/Cartridge ☐ HEPA ☐ Other:

Process Stream Characteristics	
15. Brief Description of Process	.Woodgrain operates this process equipment for the primary purpose collecting wood shavings from moulder, planers and wood shapping equipment for the purpose of selling the collected shaving as animal bedding or to other facilites to process into consumer products. This cyclone services the ……..
16. Flow Data	Gas stream temperature: 75 degrees F Moisture content: Ambient grams of water/cubic feet (ft^3) of dry air <u>Pressure drop range</u> High: Unk in. H_2O Low: Unk in. H_2O Dew point temperature of process stream: Ambient degrees F Inlet flow rate: 27,567 ACFM
17. Dust Collection Device	☐ Pneumatic conveyor ☒ Rotary airlock values ☐ Screw conveyors ☐ Closed container ☐ Double dump ☐ Drag conveyor ☐ Manual discharge device: ☐ Slide gate OR ☐ Hinged doors or drawers
18. Operating Schedule	Normal: 24 hours/day 7 days/week 50 weeks/year Maximum: 24 hours/day 7 days/week 50 weeks/year

DEQ AIR QUALITY PROGRAM
1410 N. Hilton, Boise, ID 83706
For assistance, call the
Air Permit Hotline: 1-877-5PERMIT

Cyclone Separator- **Form CYS**
Revision 2
08/28/08

Please see instructions on page 37 before filling out the form.

IDENTIFICATION

1. Company Name: Woodgrain Millwork Inc.	2. Facility Name: Fruitland Facility	3. Facility ID No.: 75-00001
4. Brief Project Description: Woodgrain Millwork Inc. Tier I permit renewal.		

CYCLONE SEPARATOR INFORMATION

Equipment Description

5. Manufacturer: Self

6. Model Number: Millwork Cyclone K

7. Dimensions

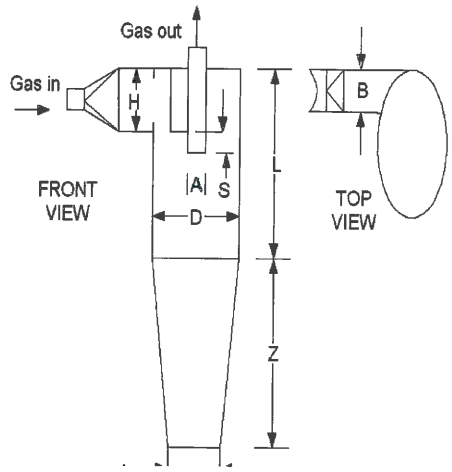

Give dimensions of cyclone. (See sample diagram above.)

1. B: 18 in.
2. H: 48 in.
3. S: 60 in.
4. L: 96 in.
5. Z: 180 in.
6. D: 120 in.
7. A: 60 in.
8. J: 18 in.

8. Particulate Size Distribution Data

Micron range	Particle size distribution weight %	Manufacturer's guaranteed removal efficiency for each micron range
0.5-1.0	0	NA
1.0-5.0	0.01%	50.7%
5-10	0.1%	68.1%
10-20	0.12%	86.3%
Over 20	99.78%	99.5%

9. Type of Cyclone: ☐ Wet ☒ Dry

10. Type of Cyclone Unit: ☒ Single ☐ Dual ☐ Quadruple ☐ Multiclone

11. Blower: Blower horsepower: hp
Design flow rate: 23,326 scfm
Draft: ☒ Forced ☐ Induced

12. Design Criteria: Cyclone configuration: ☒ Positive pressure ☐ Negative pressure

13. Pre-Treatment Device: ☐ Cyclone ☐ Knock-out chamber ☐ Precooler ☒ None ☐ Preheater

14. Post-Treatment Device: ☐ Baghouse/Cartridge ☐ HEPA ☐ Other:

Process Stream Characteristics	
15. Brief Description of Process	.Woodgrain operates this process equipment for the primary purpose collecting wood shavings from moulder, planers and wood shapping equipment for the purpose of selling the collected shaving as animal bedding or to other facilites to process into consumer products. This cyclone services the ……..
16. Flow Data	Gas stream temperature: 75 degrees F Moisture content: Ambient grams of water/cubic feet (ft^3) of dry air <u>Pressure drop range</u> High: Unk in. H_2O Low: Unk in. H_2O Dew point temperature of process stream: Ambient degrees F Inlet flow rate: 23,326 ACFM
17. Dust Collection Device	☐ Pneumatic conveyor ☒ Rotary airlock values ☐ Screw conveyors ☐ Closed container ☐ Double dump ☐ Drag conveyor ☐ Manual discharge device: ☐ Slide gate OR ☐ Hinged doors or drawers
18. Operating Schedule	Normal: 24 hours/day 7 days/week 50 weeks/year Maximum: 24 hours/day 7 days/week 50 weeks/year

DEQ AIR QUALITY PROGRAM
1410 N. Hilton, Boise, ID 83706
For assistance, call the
Air Permit Hotline – 1-877-5PERMIT

Emissions Unit - General **Form E**
Revisi
08/2

*Please see instructions on page**Error! Bookmark not defined.**before filling out the form.*

IDENTIFICATION

1. Company Name:	2. Facility Name:	3. Facility ID No:
Woodgrain Millwork Inc.	Fruitland Facility	075-00001

4. Brief Project Description: This process consists of coating and gluing operations for the following manufacturing areas at t
Fruitland facility: Prefinish and Millwork. Woodtreat. Coating and gluing consists of roll coating

EMISSIONS UNIT (PROCESS) IDENTIFICATION & DESCRIPTION

5. Emissions Unit (EU) Name: COATING AND GLUEING

6. EU ID Number:

7. EU Type: ☐ New Source ☐ Unpermitted Existing Source
☐ Modification to a Permitted Source -- Previous Permit #:T1-60054 Date Issued: July 6, 2007

8. Manufacturer: VARIOUS

9. Model: NA

10.. **Maximum Capacity:** 813 TON/YEAR VOC

11. Date of Construction:

12. Date of Modification (if any):

13. **Is this a Controlled Emission Unit?** ☒ No ☐ Yes If Yes, complete the following section. If No, go to line 22.

EMISSIONS CONTROL EQUIPMENT

14. Control Equipment Name and ID:

15. Date of Installation: 16. Date of Modification (if any):

17. Manufacturer and Model Number:

18. ID(s) of Emission Unit Controlled:

19. Is operating schedule different than emission units(s) involved? ☐ Yes ☐No

20. Does the manufacturer guarantee the control efficiency of the control equipment? ☐ Yes ☐ No (If Yes, attach and label manufacturer guarantee)

	PM	*PM10*	SO_2	NOx	VOC	CO
Control Efficiency						

21. If manufacturer's data is not available, attach a separate sheet of paper to provide the control equipment design specifications and performance d
to support the above mentioned control efficiency.

EMISSION UNIT OPERATING SCHEDULE (hours/day, hours/year, or other)

22. **Actual Operation:**

23. **Maximum Operation:** 8,760 HOURS PER YEAR

REQUESTED LIMITS

24. Are you requesting any permit limits? ☐ Yes ☒ No (If Yes, indicate all that apply below)

☐ Operation Hour Limit(s):

☐ Production Limit(s):

☐ Material Usage Limit(s):

☐ Limits Based on Stack Testing: Please attach all relevant stack testing summary reports

	☐ Other:
25.	Rationale for Requesting the Limit(s):

DEQ AIR QUALITY PROGRAM
1410 N. Hilton, Boise, ID 83706
For assistance, call the
Air Permit Hotline – 1-877-5PERMIT

Emissions Unit - General **Form E**
Revisi
08/2

Please see instructions on page ***Error! Bookmark not defined.*** *before filling out the form.*

IDENTIFICATION

1. Company Name:	2. Facility Name:	3. Facility ID No:
Woodgrain Millwork Inc.	Fruitland Facility	075-00001

4. Brief Project Description: Printing consists of product rotogravure printing of substrate which is applied to products manufactured at facility. VOC and HAP emissions from the printing process are uncontrolled

EMISSIONS UNIT (PROCESS) IDENTIFICATION & DESCRIPTION

5. Emissions Unit (EU) Name: Printing Operations

6. EU ID Number:

7. EU Type: ☐ New Source ☐ Unpermitted Existing Source
☐ Modification to a Permitted Source -- Previous Permit #:T1-60054 Date Issued: July 6, 2007

8. Manufacturer: VARIOUS

9. Model: NA

10.. **Maximum Capacity:** 813 TON/YEAR VOC

11. Date of Construction:

12. Date of Modification (if any):

13. **Is this a Controlled Emission Unit?** ☒ No ☐ Yes If Yes, complete the following section. If No, go to line 22.

EMISSIONS CONTROL EQUIPMENT

14. Control Equipment Name and ID:

15. Date of Installation: 16. Date of Modification (if any):

17. Manufacturer and Model Number:

18. ID(s) of Emission Unit Controlled:

19. Is operating schedule different than emission units(s) involved? ☐ Yes ☐No

20. Does the manufacturer guarantee the control efficiency of the control equipment? ☐ Yes ☐ No (If Yes, attach and label manufacturer guarantee)

	PM	*PM10*	SO_2	NOx	VOC	CO
Control Efficiency						

21. If manufacturer's data is not available, attach a separate sheet of paper to provide the control equipment design specifications and performance d support the above mentioned control efficiency.

EMISSION UNIT OPERATING SCHEDULE (hours/day, hours/year, or other)

22. **Actual Operation:**

23. **Maximum Operation:** 8,760 HOURS PER YEAR

REQUESTED LIMITS

24. Are you requesting any permit limits? ☐ Yes ☒ No (If Yes, indicate all that apply below)

☐ Operation Hour Limit(s):

☐ Production Limit(s):

☐ Material Usage Limit(s):

☐ Limits Based on Stack Testing: Please attach all relevant stack testing summary reports

☐ Other:

25. Rationale for Requesting the Limit(s):

APPENDIX C – CYCLONE EMISSIONS FACTOR REPORT

woodgrain millwork

Fruitland Idaho Facility
Cyclone Particle Size Distribution
And
Cyclone Emission Factor Determination

April 23, 2004

woodgrain millwork

Source Test Certification

I hereby certify that the test detail in this report was accomplished in conformance with the Cyclone Emission Factor Determination Protocol submitted to the Department on November 21, 2003 and conforms to the conditions noted in the January 30, 2004 letter from Bill Rogers stating Conditional Approval. Per conversations with the Department the January 30th letter was incorporated into the protocol. The results submitted herein are accurate and true to the best of my knowledge.

Stephen Coe PE
Corporate Environmental Manager
Woodgrain Millworks

Signature: Stephen Coe

Date: April 23, 2004

P.O. Box 566 • 300 NW 16th Street • Fruitland, Idaho 83619 • Tel 208.452.3801 • Fax 208.452.3800 • www.woodgrain.com

woodgrain millwork

Introduction

Test Purpose

The objective of these tests is to establish site specific Particulate Mater (PM) and Particulate Mater having an aerodynamic mean less than or equal to 10 μm (PM_{10}) Emission Factors (EF).

Test Location

The facility operates six cyclones on site that discharge to ambient air, four of these cyclones were to be tested. The remaining two cyclones were not sampled due to the low throughput rates and duct designs that will not allow for standardized sampling, as described in the protocol. Sampling was attempted on Cyclones B, C, J, and K.

Test Dates

Sample collection took place on March 9-11, 2004. Testing was conducted by Woodgrain personnel and was observed by a DEQ representative. Stephen Coe, sampled each cyclone, Mark Rawlings supervised the fan shutdown procedures, and Mike Stambulis of the Idaho DEQ was on-site to witness the sampling.

Sampling

Sampling Procedures

A sample of the material entering the cyclones was collected using the following procedures.

- All available equipment attached to the cyclone was operating.
- Power to the fan was shut off.
- Immediately after shutting the fan off the duct was opened by releasing a band connecting the fan and the ductwork.
- The duct was immediately blocked to minimize particulate migration.
- The particulates in the ductwork were allowed to settle for a minimum of 10 minutes.
- An access hatch located in the ductwork was opened to reveal the material to be collected.
- A sample of the material that had settled in the ductwork was collected at the sampling locations.
    - To obtain a representative sample, all of the settled material was collected and all of the material located in the bottom 3rd of a 1 foot cross-section was be collected. A minimum of 100 g of sample was collected at each location. Each cyclone required multiple 1-foot cross-section samples to yield a sufficient sample volume. Adjacent 1-foot cross-sections were used until a sufficient sample volume was obtained.
    - The remaining top section of the ductwork was not disturbed. Any material attached to the walls above the bottom 3rd is the result of material that has built up over time and will bias the sample.
    - Samples were collected into plastic bags using a brush to retrieve the material located in the bottom 3rd of the ductwork. A new brush was used for each sample.
- After collection the samples were sealed and labeled.
    - Sample label noted the date/time, sampler, sample location, and sample ID.
- Triplicate sampling was attempted for each cyclone to verify the sampling and analytical methods.
    - Three samples were collected from the ductwork leading to each cyclone. (Cyclone K did not yield sufficient sample volume to obtain a third sample.) The three samples were collected from adjacent portions of the ductwork.

The following table is a summary of the sampling.

Table I Samples

Cyclone	Sample	Sampling Area	Sample Weight (g)
Cyclone K	C-K-1	20 – 1' cross-sections	106
Emission Point (P18)	C-K-3	20 – 1' cross-sections	115
Cyclone J	C-J-1	10 – 1' cross-sections	157
Emission Point (P17)	C-J-2	10 – 1' cross-sections	135
	C-J-3	10 – 1' cross-sections	118
Cyclone B	C-B-1	10 – 1' cross-sections	117
Emission Point (P6)	C-B-2	10 – 1' cross-sections	112
	C-B-3	10 – 1' cross-sections	111
Cyclone C	NA		
Emission Point (P8)			

Included in the appendix is the full Cyclone Sampling Log.

Only two samples were collected from the Cyclone K ductwork. This was due the minimal amount of material in the ductwork (pictures located in the Cyclone Sampling Log illustrate this). The first two samples consumed all the material within the area allowed per EPA method 1.

During the collection of sample C-B-1 one of the 1' cross sections encountered a seam in the ductwork that had been damaged resulting in a raised seam. The raised portion of the seam was facing the outlet of the ductwork, resulting in excessive material deposited in this area. The sampling included this cross section. The cross section was lightly brushed to only remove the top surface material and not the historically deposited material. No material was "dug out" of the raised seam. This resulted in the sample visually appearing to have collected additional fine material.

Sampling of Cyclone C was attempted on March 9th and 11th. Each time the ductwork was opened there was not enough material to be collected. This is documented including a photo in the Cyclone Sampling Log located in the appendix.

Sample Analysis

The samples were sent to Particle Technology Labs Ltd. (PTL) in Downers Grove IL. The Sample Chain of Custody is included in the appendix. The samples collected had a particle size distribution analysis done on the entire sample. The particle size distribution was obtained through a combination of methods. The entire sample was run through a traditional sieve analysis, and the material smaller than 2000 microns size distribution was to be determined by dry laser diffraction. The two results were then combined to produce a total particle size distribution for the material entering the cyclones.

Sieve Analysis
Each sample was sieved per PTL test method SV115.01 to obtain the following size distributions:

25,000 – 12,500 μm
12,500 – 6,300 μm
6,300 – 3,180 μm
3,180 – 2,000 μm
2,000 – 1,000 μm

The particle size was determined using standard 8-inch diameter sieves, in conjunction with a Humboldt Model 4325 mechanical sieve shaker.

Laser Diffraction
Following the sieve analysis, the particle size of the minus 2000 um fraction was then determined using a Malvern Mastersizer 2000 LASER diffractor with the dry module Scirocco 2000S dry powder feeder attachment. This analysis was conducted in accordance with PTL Test Method MM142.01. Per this method, each sample was placed into the instrument's dry powder feeder assembly and air pressure was used to disperse and transport the material through the laser. The sample was analyzed according to standard operating procedures for this instrumentation type. The sieve data was then blended onto the Malvern analysis results in order to obtain the entire particle size distribution.

Emission Factor Determination
The particle size distribution was used to calculate site-specific emission factors from known cyclone design equations. The Lieth & Licht cyclone design equations are typically used to design a cyclone to achieve maximum efficiency for a gas stream. In this case the same equations were used with the actual cyclone dimensions, flow, dust loading, etc. to calculate the efficiency and an emission factor.

Results and Discussion

Sample Analysis
Samples were sent to PTL on March 12, 2004 and the results were received on April 1, 2004. The raw data results are included in the appendix. The following table shows the particle size distribution for each sample, a composite of all the samples and the average.

woodgrain millwork

Table II Particle Size Distribution

Median Particle Size	Particle Fraction (microns)			Sample C-J-1	C-J-2	C-J-3	C-K-1	C-K-3	C-B-1	C-B-2	C-B-3	Comp	Avg.
Sieve Analysis													
18,750	25,000	to	12,500	3.0%	3.3%	3.6%	0.1%	0.2%	0.5%	0.4%	0.9%	1.5%	1.5%
9,400	12,500	to	6,300	12.0%	25.9%	19.3%	19.7%	19.5%	24.7%	17.9%	19.4%	19.8%	19.8%
4,740	6,300	to	3,180	24.0%	22.0%	26.4%	24.7%	25.9%	29.0%	29.7%	33.6%	26.9%	26.9%
2,590	3,180	to	2,000	22.6%	15.5%	21.4%	16.6%	19.3%	12.6%	12.1%	13.3%	16.7%	16.7%
1,500	2,000	to	1,000	24.8%	19.4%	20.0%	23.6%	24.3%	16.6%	18.2%	17.8%	22.0%	20.6%
	1,000	to	-	13.6%	13.9%	9.3%	15.3%	10.8%	16.6%	21.7%	15.0%	13.1%	14.5%
Laser Diffraction													
1,912	2,000	to	1,824	1.43%	1.24%	1.29%	1.58%	1.26%	1.00%	1.29%	1.25%	1.54%	1.293%
1,744	1,824	to	1,664	2.23%	1.96%	2.02%	2.47%	2.18%	1.58%	2.01%	1.97%	2.39%	2.053%
1,590	1,664	to	1,517	3.45%	3.05%	3.15%	3.78%	3.63%	2.46%	3.14%	3.06%	3.68%	3.215%
1,450	1,517	to	1,384	4.61%	4.08%	4.21%	5.00%	5.08%	3.30%	4.20%	4.12%	4.87%	4.325%
1,323	1,384	to	1,262	5.66%	5.06%	5.22%	6.08%	6.45%	3.82%	5.19%	5.13%	5.93%	5.326%
1,206	1,262	to	1,151	6.69%	6.02%	6.20%	7.11%	7.77%	5.23%	6.18%	6.11%	6.95%	6.414%
1,100	1,151	to	1,050	7.54%	6.86%	7.06%	7.95%	8.84%	5.66%	7.01%	6.97%	7.78%	7.236%
1,003	1,050	to	957.3	8.14%	7.46%	7.68%	8.49%	9.51%	6.21%	7.63%	7.62%	8.33%	7.843%
915.1	957.3	to	873.0	8.45%	7.84%	8.06%	8.74%	9.73%	6.61%	8.00%	8.01%	8.58%	8.180%
834.6	873.0	to	796.2	8.45%	7.93%	8.16%	8.62%	9.47%	6.77%	8.10%	8.11%	8.50%	8.201%
761.2	796.2	to	726.2	8.12%	7.72%	7.95%	8.19%	8.77%	6.71%	7.82%	7.91%	8.11%	7.899%
694.2	726.2	to	662.3	7.53%	7.27%	7.48%	7.47%	7.68%	6.46%	7.38%	7.43%	7.45%	7.338%
633.1	662.3	to	604.0	6.70%	6.61%	6.81%	6.53%	6.38%	6.03%	6.67%	6.75%	6.57%	6.560%
577.4	604.0	to	550.8	5.75%	5.79%	5.97%	5.48%	4.99%	5.47%	5.83%	5.89%	5.57%	5.646%
526.6	550.8	to	502.4	4.72%	4.89%	5.04%	4.36%	3.61%	4.84%	4.89%	4.95%	4.49%	4.663%
480.3	502.4	to	458.2	3.69%	3.98%	4.09%	3.28%	2.39%	4.16%	3.94%	3.99%	3.46%	3.690%
437.9	458.2	to	417.6	2.74%	3.11%	3.20%	2.30%	1.46%	3.50%	3.05%	3.08%	2.50%	2.805%
	417.6	to	381.1	1.90%	2.31%	2.37%	1.47%	0.65%	2.89%	2.24%	2.25%	1.67%	2.010%

P.O. Box 566 • 300 NW 16th Street • Fruitland, Idaho 83619 • Tel 208.452.3801 • Fax 208.452.3800 • www.woodgrain.com

woodgrain millwork

399.3													
364.3	381.1	to	347.6	1.20%	1.65%	1.67%	0.87%	0.12%	2.34%	1.55%	1.56%	1.00%	1.370%
332.3	347.6	to	317.0	0.68%	1.10%	1.11%	0.23%	0.03%	1.87%	1.02%	1.01%	0.49%	0.881%
303.0	317.0	to	289.1	0.29%	0.69%	0.66%	-	-	1.49%	0.60%	0.58%	0.04%	0.539%
276.4	289.1	to	263.7	0.03%	0.40%	0.37%	-	-	1.19%	0.33%	0.32%	0.10%	0.330%
252.1	263.7	to	240.5	-	0.21%	0.16%	-	-	0.97%	0.16%	0.14%	-	0.205%
229.9	240.5	to	219.3	-	0.12%	0.05%	-	-	0.79%	0.08%	0.06%	-	0.138%
209.6	219.3	to	200.0	-	0.08%	0.02%	-	-	0.69%	0.06%	0.05%	-	0.113%
191.2	200.0	to	182.4	-	0.09%	-	-	-	0.60%	0.07%	0.06%	-	0.103%
174.4	182.4	to	166.4	-	0.11%	-	-	-	0.53%	0.11%	0.10%	-	0.106%
159.0	166.4	to	151.7	-	0.14%	-	-	-	0.50%	0.15%	0.15%	-	0.118%
145.0	151.7	to	138.4	-	0.18%	-	-	-	0.46%	0.17%	0.17%	-	0.123%
132.3	138.4	to	126.2	-	0.19%	-	-	-	0.42%	0.19%	0.20%	-	0.125%
120.6	126.2	to	115.1	-	0.21%	-	-	-	0.39%	0.20%	0.20%	-	0.125%
110.0	115.1	to	105.0	-	0.20%	-	-	-	0.35%	0.19%	0.20%	-	0.118%
100.3	105.0	to	95.7	-	0.19%	-	-	-	0.31%	0.16%	0.17%	-	0.104%
91.5	95.7	to	87.3	-	0.17%	-	-	-	0.28%	0.14%	0.14%	-	0.091%
83.5	87.3	to	79.6	-	0.14%	-	-	-	0.25%	0.10%	0.12%	-	0.076%
76.1	79.6	to	72.6	-	0.12%	-	-	-	0.21%	0.08%	0.08%	-	0.061%
69.4	72.6	to	66.3	-	0.10%	-	-	-	0.19%	0.05%	0.06%	-	0.050%
63.3	66.3	to	60.4	-	0.07%	-	-	-	0.17%	0.02%	0.03%	-	0.036%
57.7	60.4	to	55.1	-	0.07%	-	-	-	0.15%	-	-	-	0.028%
52.7	55.1	to	50.2	-	0.05%	-	-	-	0.14%	-	-	-	0.024%
48.0	50.2	to	45.8	-	0.04%	-	-	-	0.13%	-	-	-	0.021%
43.8	45.8	to	41.8	-	0.04%	-	-	-	0.13%	-	-	-	0.021%
39.9	41.8	to	38.1	-	0.04%	-	-	-	0.12%	-	-	-	0.020%
36.4	38.1	to	34.8	-	0.04%	-	-	-	0.13%	-	-	-	0.021%
33.2	34.8	to	31.7	-	0.04%	-	-	-	0.13%	-	-	-	0.021%
30.3	31.7	to	28.9	-	0.05%	-	-	-	0.13%	-	-	-	0.023%
27.6	28.9	to	26.4	-	0.05%	-	-	-	0.13%	-	-	-	0.023%
25.2	26.4	to	24.0	-	0.04%	-	-	-	0.14%	-	-	-	0.023%
	24.0	to	21.9	-	0.05%	-	-	-	0.13%	-	-	-	0.023%

P.O. Box 566 • 300 NW 16th Street • Fruitland, Idaho 83619 • Tel 208.452.3801 • Fax 208.452.3800 • www.woodgrain.com

23.0													
21.0	21.9	to	20.0	-	0.05%	-	-	-	0.14%	-	-	-	0.024%
19.1	20.0	to	18.2	-	0.04%	-	-	-	0.13%	-	-	-	0.021%
17.4	18.2	to	16.6	-	0.04%	-	-	-	0.13%	-	-	-	0.021%
15.9	16.6	to	15.2	-	0.02%	-	-	-	0.13%	-	-	-	0.019%
14.5	15.2	to	13.8	-	-	-	-	-	0.12%	-	-	-	0.015%
13.2	13.8	to	12.6	-	-	-	-	-	0.13%	-	-	-	0.016%
12.1	12.6	to	11.5	-	-	-	-	-	0.12%	-	-	-	0.015%
11.0	11.5	to	10.5	-	-	-	-	-	0.11%	-	-	-	0.014%
10.0	10.5	to	9.57	-	-	-	-	-	0.12%	-	-	-	0.015%
9.2	9.57	to	8.73	-	-	-	-	-	0.11%	-	-	-	0.014%
8.3	8.73	to	7.96	-	-	-	-	-	0.11%	-	-	-	0.014%
7.6	7.96	to	7.26	-	-	-	-	-	0.11%	-	-	-	0.014%
6.9	7.26	to	6.62	-	-	-	-	-	0.10%	-	-	-	0.013%
6.3	6.62	to	6.04	-	-	-	-	-	0.09%	-	-	-	0.011%
5.8	6.04	to	5.51	-	-	-	-	-	0.08%	-	-	-	0.010%
5.3	5.51	to	5.02	-	-	-	-	-	0.07%	-	-	-	0.009%
4.8	5.02	to	4.58	-	-	-	-	-	0.04%	-	-	-	0.005%
			Mean Particle size (um)	915	861	884	942	962	762	876	872	931	884
			Median Particle size (um)	856	810	824	884	911	720	821	818	873	831
			10% Particle size (um)	496	430	463	524	571	254	449	449	511	455
			90% Particle size (um)	1,429	1,393	1,402	1,454	1,434	1,330	1,401	1,395	1,446	1,405

The table above provides results for both the sieve analysis and the laser diffraction analysis. The sieve data shows that approximately 35% of the material is smaller than 2000 μm. The table also provides the Mean, Median, the 90% cutoff and the 10% cutoff. The data shows that the average mean particle size is 884 μm for the particles less than 2000 μm. The sample analysis presented the results in equivalent spherical diameter.

From this point on the data analysis and emission factor determination will focus on the smaller than 2000 μm fraction of the sample. No adjustments have been made to account for the fact that 65% of the sample is greater than 2000 μm and should never be emitted. This should produce the most conservative estimate of emissions.

woodgrain millwork

The following table is a correlation matrix for the sample distributions show in Table II.

Table III – Correlation Matrix

	C-J-1	C-J-2	C-J-3	C-K-1	C-K-3	C-B-1	C-B-2	C-B-3	Comp
C-J-1	1.000								
C-J-2	0.997	1.000							
C-J-3	0.997	1.000	1.000						
C-K-1	0.998	0.991	0.991	1.000					
C-K-3	0.987	0.975	0.974	0.994	1.000				
C-B-1	0.978	0.990	0.989	0.964	0.940	1.000			
C-B-2	0.998	1.000	1.000	0.993	0.978	0.988	1.000		
C-B-3	0.998	1.000	1.000	0.992	0.976	0.989	1.000	1.000	
Comp	0.999	0.994	0.994	1.000	0.992	0.994	0.995	0.994	1.000

Average Correlation	0.990
Standard Deviation	0.0124
Variance	0.00015

A correlation matrix compares each sample to determine how closely they are related. A correlation of 1.00 is perfect correlation, and a correlation of 0.00 represents no correlation. This sample set has provided a near perfect correlation resulting in an Average Correlation for the entire set of 0.990. As shown above the Standard Deviation and Variance are respectively 0.0124 and 0.00015. Both these numbers indicate that the samples are very similar in particle size distribution.

The following figure is a graphical representation of the particle size distribution.

Figure I

Particle Size Distribution of Particles less than 2000 micron

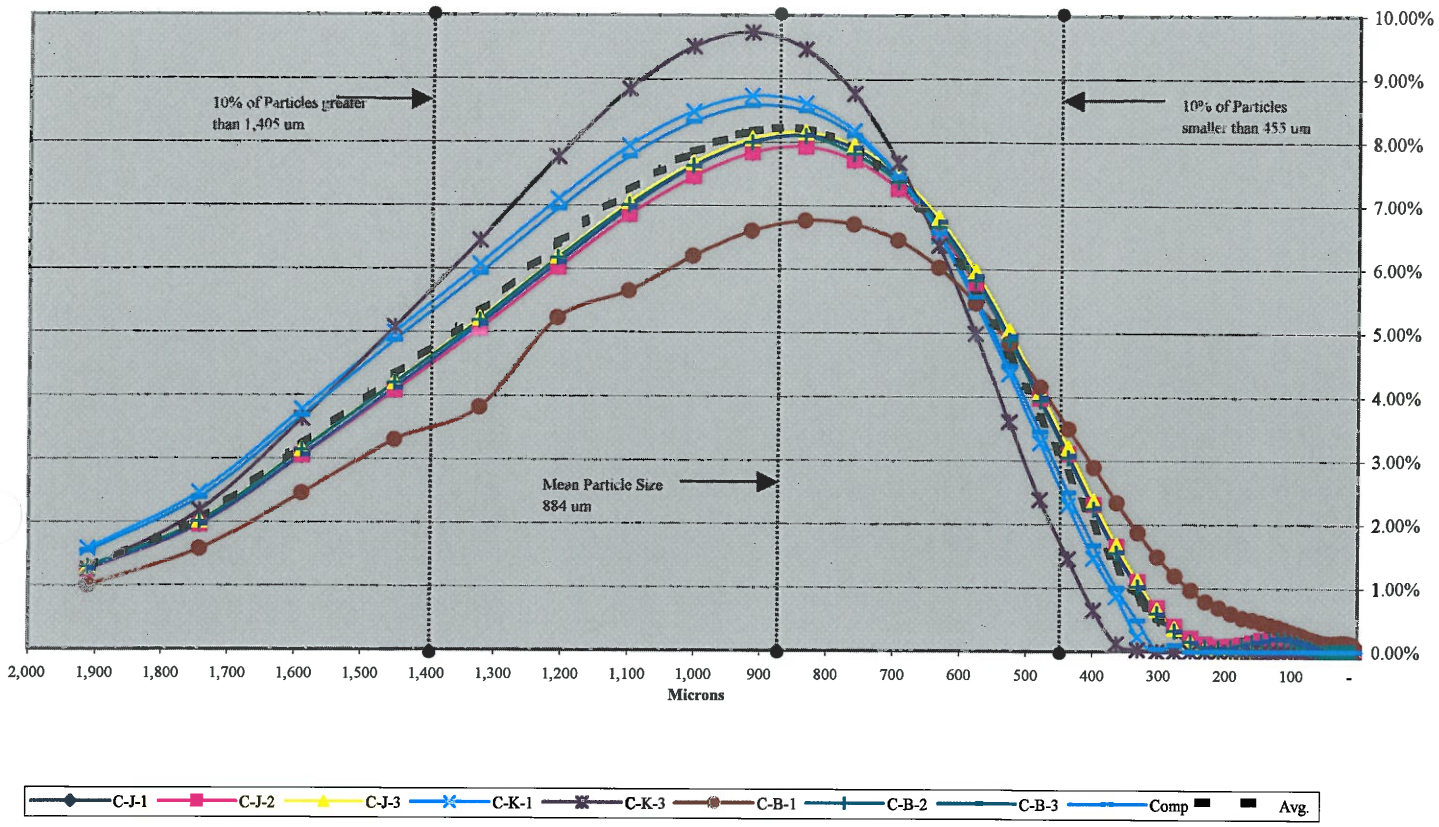

The graph above shows what the correlation matrix has already confirmed, that the samples are very similar in size distribution. The dashed line is the average of the distributions. The mean particle size of 884 μm is shown.

During the collection of Sample C-B-1 it was noted that the sample included a raised seam section of the ductwork that had accumulated wood shavings over time. This sample included only the top loose material in this section. The sample visually appeared to have more fine material than the other samples. The graph above and the data in Table II concur with this observation. All the data analysis and the emission factor determinations have retained the data from this sample. Using this data will produce a more conservative emission factor, than if the data were to be removed.

The statistical and graphical representations of the data presented in Table II and Figure I, suggest that the equipment attached to the cyclones produce like particle size distributions. The emission factor calculations will use the average particle size distribution.

Throughput During Testing

The table below shows the recorded throughput during the tests.

Table IV

Board Footage Through Put by Machine Center

Cyclone	Machine #		BF / HR
J (P17)	522 Cutline		2,886
J (P17)	575 / 576 Moulders		1,415
K (P18)	561 Core Machine		1,762
K (P18)	571 Moulder		1,054
K (P18)	572 Moulder		1,470
B (P6)	373 Moulder / Tenoner		1,987
B (P6)	374 Moulder / Tenoner		391
B (P6)	375 Moulder		-
C (P8)	353 Resaw		No Data

S- -dust Collection Test for DEQ Visit - 3/9/04

The table below shows the conversion from board feet to bone dry tons, the estimation of shavings produced and the cyclone feed rate. There are 1.25 BDT/1000 board feet of Radiata pine.

Table V

	Cyclone					
	B (P6)	C (P8)*	D (P35)*	I (P10)*	J (P17)	K (P18)
Board Feet/hr	2,378	na	na	na	4,301	4,286
Bone Dry Tons	2.97	na	na	na	5.38	5.36
% Shavings Produced	18%	na	na	na	28%	28%
Tons Shavings/hr	0.54	0.113	0.027	0.031	1.51	1.50
Cyclone Feed (lb/hr)	1,070	225	54	62	3,011	3,000
Throughput Fraction	14%	3.0%	0.73%	0.83%	41%	40%

** Cyclones C, D, and I were not sampled and no throughput data were collected.*

woodgrain millwork

Emission Factor Calculations

The average particle size distribution was input into Leith and Licht (L&L) cyclone equations. The Conditional Approval letter from William Rogers requested that "Woodgrain shall ensure that physical diameters of particles are converted to aerodynamic diameters." The raw data is presented in equivalent spherical diameter. The L&L equations utilize the density of the material input into the cyclone to convert from a equivalent spherical diameter to an aerodynamic diameter. (To show the results are the same a comparison of Cyclone J using the equivalent spherical diameter and the material density to Cyclone J using the aerodynamic diameter and the unit density are provided in the Appendix.) Thus the Departments request for the use of aerodynamic diameters has been fulfilled.

The following graph is a representation of the results of the L&L calculations for each of the cyclones using the average particle size distribution. The full L&L spreadsheets are included in the appendix for each cyclone. The cyclone dimensions are tabulated in the appendix.

Figure II

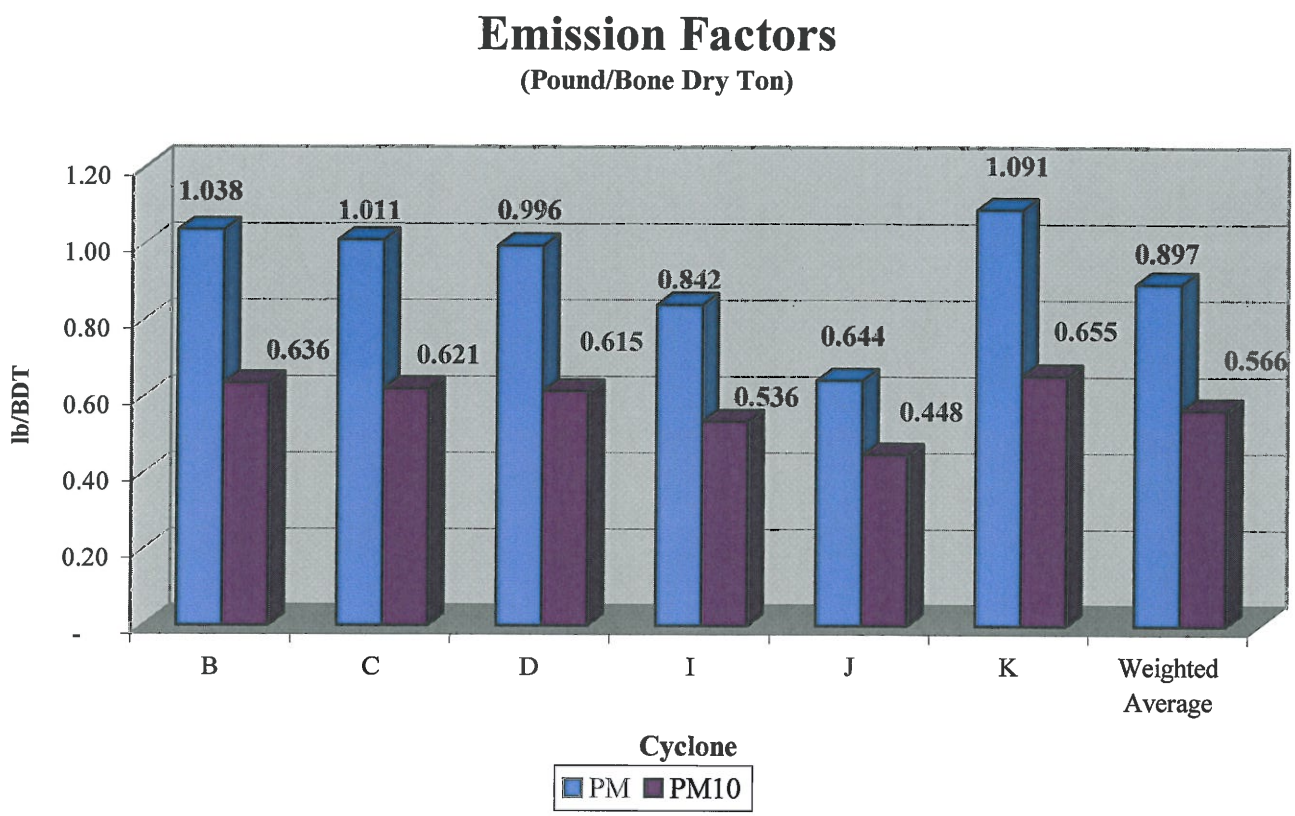

The table below shows the emission factors, facility throughput fraction and the weighted average of the emission factors.

Table VI

Cyclone	Emission Factor PM (lb/BDT)	Emission Factor PM_{10} (lb/BDT)	Facility Throughput Fraction
B (P6)	1.038	0.636	14.4%
C (P8)	1.011	0.621	3.04%
D (P35)	0.996	0.615	0.73%
I (P10)	0.842	0.536	0.83%
J (P17)	0.644	0.448	40.6%
K (P18)	1.091	0.655	40.4%
Weighted Average	***0.897***	***0.566***	

Figure II and Table VI above both show the emission factors that were derived from the L&L equations. As can be seen the highest EF is 1.091 lb/BDT for Cyclone K and the lowest is 0.644 lb/BDT for cyclone J. Figure II illustrates that the emission factors are relatively uniform, especially for the PM_{10} fraction. The facility throughput fraction shown in Table VI was determined from the recorded throughput during the tests and historical throughput numbers for cyclones that were not sampled as illustrated in Tables VI and V. The facility throughput fraction was used to calculate the weighted average. The weighted average is an emission factor that is adjusted proportionally to the amount of material that is put through the cyclones.

Conclusion

The material entering Cyclones B, J, and K were all sampled to determine the particle size distribution. Particle Technology Labs performed the sieve and laser diffraction particle size distributions on each of the samples. The samples showed a 0.99 correlation between each other, which justifies combining the samples and using the average particle distribution for the emission factor calculations. The emission factors were relatively consistent ranging from 0.644 lb/BDT to 1.091 lb/BDT. In every instance the most conservative approach was taken in producing these emission factors for the individual cyclones.

Woodgrain proposes that the Emission Factor Weighted Averages of 0.897 lb/BDT for PM and 0.566 lb/BDT for PM_{10} be used for a site-specific emission factor for all the cyclones. Using these emission factors will produce accurate, yet conservative estimates of emissions.

RECEIVED
JUN 01 2012
DEPARTMENT OF ENVIRONMENTAL QUALITY
STATE A Q PROGRAM

woodgrain millwork

Tier I (Title V) Permit Renewal Application
Additional Information

Permit T1--060054

Facility #075-00001

May 31, 2012

The methods used for determining compliance status, including applicable monitoring, recordkeeping, reporting or test methods were included with the initial operating permit application submittal, are still current and applicable. Woodgrain is in compliance with all applicable requirements affecting the facility as a whole as well as the specific emission units located at the facility, therefore a compliance schedule is not required with this application. Woodgrain will continue to be in compliance with applicable requirements, for which it is in compliance, and will, in a timely manner or at such a schedule expressly required by the applicable requirement, meet additional applicable requirements that become effective during the permit term.

The submittal of compliance certifications during the five-year term of the operating permit will continue to occur semi-annually and annually within 30 days of the end of the specified reporting period.

Certification of Truth, Accuracy, and Completeness (by Responsible Official).

I certify that, based on information and belief formed after reasonable inquire, the statements and information in this document are true, accurate, and comp

Phil Steklenski
Name

Vice President Millwork Division
Title

Signature

May 31, 2012
Date

CO2e emission estimates from the emergency generator engine.

Woodgrain does have a small less than 500 hp emergency compression ignition generator, which is operated less than 500 hours per year. This emergency generator is subject to NSPS 40 CFR 63 Subpart ZZZZ. FRA Form is included. As requested below are the emissions related to the use of the emergency generator include CO2. Although this engine is an EPA Tier II certified engine which limits the emissions the estimated emissions below utilize EPA AP-42 emissions factors to be conservative. Note that this generator qualifies as an exempt source per IDAPA 58.01.01.222(01)(c)(iii).

The Compression Ignition generator located at this facility is a Kohler Power System Model 230, which is a 347 hp Diesel engine attached to a 230 KW Generator. This emergency generator was installed on 2/2004 and has operated a total of 391 hours since installation, which is approximately 49 hours per year. For estimating emissions 500 hours per year was used. Obviously this greatly over estimates the emissions from this Generator.

Kohler Power System 230 - 347Hp Diesel engine

Diesel Engine Generator

Note: Emissions are based on the power output of the engine (347 hp).

Operational Capacity of Engine = 347 hp	347.00	hp
Hours of Operation = 500.00 hours	500.00	hours
PM Emissions: (AP-42, Sec. 3.3, Table 3.3-1, 10/96)		
PM Emissions = 0.19 ton/yr	0.19	ton/yr
PM Emissions = 381.70 lbs/yr	381.70	lbs/yr
PM-10 Emissions: (AP-42, Sec. 3.3, Table 3.3-1, 10/96)		
Emission Factor = 0.0022 lbs/hp-hr	2.20E-03	lbs/hp-hr
Calculation: (500 hours) * (347 hp) * (0.0022 lbs/hp-hr) * (ton/2000 lb) = 0.19 ton/yr	0.19	ton/yr
Calculation: (500 hours) * (347 hp) * (0.0022 lbs/hp-hr) = 381.70 lbs/yr	381.70	lbs/yr
NOx Emissions: (AP-42, Sec. 3.3, Table 3.3-1, 10/96)		
Emission Factor = 0.031 lbs/hp-hr	3.10E-02	lbs/hp-hr
Calculation: (500 hours) * (347 hp) * (0.031 lbs/hp-hr) * (ton/2000 lb) = 2.69 ton/yr	2.69	ton/yr
Calculation: (500 hours) * (347 hp) * (0.031 lbs/hp-hr) = 5,378.50 lbs/yr	5,378.50	lbs/yr
CO Emissions: (AP-42, Sec. 3.3, Table 3.3-1, 10/96)		
Emission Factor = 0.00668 lbs/hp-hr	6.68E-03	lbs/hp-hr
Calculation: (500 hours) * (347 hp) * (0.00668 lbs/hp-hr) * (ton/2000 lb) = 0.58 ton/yr	0.58	ton/yr
Calculation: (500 hours) * (347 hp) * (0.00668 lbs/hp-hr) = 1,158.98 lbs/yr	1,158.98	lbs/yr
VOC Emissions: (AP-42, Sec. 3.3, Table 3.3-1, 10/96)		
Emission Factor = 0.0025141 lbs/hp-hr	2.51E-03	lbs/hp-hr
Calculation: (500 hours) * (347 hp) * (0.0025141 lbs/hp-hr) * (ton/2000 lb) = 0.22 ton/yr	0.22	ton/yr
Calculation: (500 hours) * (347 hp) * (0.0025141 lbs/hp-hr) = 436.20 lbs/yr	436.20	lbs/yr
SOx Emissions: (AP-42, Sec. 3.3, Table 3.3-1, 10/96)		
Emission Factor = 0.00205 lbs/hp-hr	2.05E-03	lbs/hp-hr
Calculation: (500 hours) * (347 hp) * (0.00205 lbs/hp-hr) * (ton/2000 lb) = 0.178 ton/yr	0.18	ton/yr
Calculation: (500 hours) * (347 hp) * (0.00205 lbs/hp-hr) = 355.68 lbs/yr	355.68	lbs/yr
CO2 Emissions: (AP-42, Sec. 3.3, Table 3.3-1, 10/96)		
Emission Factor = 1.15 lbs/hp-hr	1.15E+00	lbs/hp-hr
Calculation: (500 hours) * (347 hp) * (1.15 lbs/hp-hr) * (ton/2000 lb) = 99.76 ton/yr	99.76	ton/yr

BCE form is not complete for two baghouses (see bullet #7 in the incompleteness letter).

The completed BCE forms are attached.

Your PM10 emission estimates for baghouse N is 0.0001 T/yr. Please submit your calculations and assumptions.

Woodgrain assumes you mean 0.001 T/yr as that is the emissions provided in the original application. The appropriate baghouse emission factors for baghouses located at wood product facilities are provided by Oregon DEQ in Document AQ-EF02. The calculations for all the baghouses were provided in the original and subsequent response and are summaries below for Bahouses N.

Form AQ-EF02 provides an emission factor of 0.001 pounds of pollutant per Bone Dry ton of throughput. (0.001 lbs/BDT)

The throughput is 1000 Bone Dry tons/year.

Emissions from this source are:

1000 BDT/year X 0.001 lbs/BDT = 1 lbs/year. Or 0.0005 tons/year or rounded to 0.001 tons/year.

What is the exact date the emergency engine was commenced construction or reconstruction, manufacturer, and the capacity (in hp) of the engine. Also, submit the FRA form for the MACT Quad Z with similar fashion as you addressed the FRA form for MACT Quad Q.

The updated FRA form for Quad Z is attached. The specification sheet for the emergency engine is attached. The engine is compression ignition engine 347 hp in size.

DEQ AIR QUALITY PROGRAM
1410 N. Hilton, Boise, ID 83706
For assistance, call the
Air Permit Hotline – 1-877-5PERMIT

Baghouse Control Equipment **Form BCE**
Revision 6
2/18/10

Complete this form for each baghouse. Please see instructions on page 2 before filling out the form.

IDENTIFICATION

1. Company Name	2. Facility Name:
Woodgrain Millwork Inc.	Fruitland Facility

3. Brief Project Description: Woodgrain Millwork Inc. Tier I permit renewal.

BAGHOUSE INFORMATION

4. Baghouse Manufacturer: Macron	5. Baghouse Model: N15	6. Baghouse Equipment ID: Baghouse N15 (P4)

7 (a). Baghouse particulate matter emission concentration. **Note: Provide information in 7(a)-(c) or answer question #8 below.**	0.001 lb/Bone Dry Ton gr/dscf	*Manufacturers typically provide guarantees in grains per dry standard cubic foot (gr/dscf). Provide a copy of the guarantee, or other documentation, with the application along with a description of the types of bags that must be used to achieve the emission concentration.* ***Emission concentrations less than 0.01 gr/dscf will receive additional scrutiny by DEQ and a source test of the baghouse may be required.*** *If a guarantee is not provided then you must document how you obtained the emission concentration. Without documentation the application is not complete.*
7 (b). Percentage PM_{10} Or Provide PM_{10} Emission Concentration	_____ % _____ gr/dscf	*What percentage of the PM concentration listed in question #7(a) is PM_{10}. You must provide documentation as to how the percentage was determined (i.e per the baghouse manufacturer). Without documentation the application is not complete.*
7 (c). Baghouse flow rate	8550 dscfm	*Provide the baghouse flow rate in dry standard cubic feet per minute. Actual cubic feet per minute may be given in lieu of dscfm* ***if it is documented*** *that moisture content is insignificant. You must provide documentation as to how this flow rate was determined (i.e. per the exhaust fan manufacturer, combustion evaluation, etc.). Without documentation the application is not complete.*
8. Baghouse particulate matter control efficiency. **Note: Not needed if section #7 is completed.**	_____ % PM control _____ % PM_{10} control	*Applicant's providing the control efficiency of the baghouse must provide control efficiency for both PM and PM_{10}. Provide a copy of the control efficiency documentation with the application. Documentation must include a description of the types of bags that must be used to achieve the control efficiency. Without documentation the application is not complete.*
9. Is the baghouse equipped with a bag leak detector?	☐ Yes ☒ No	*If a bag leak detector is installed provide documentation on the leak detector, including; how the leak detector functions and what level of the output signal indicates that a bag is leaking. Without documentation the application is not complete.*

Instructions for Form BCE

1 – 3. Provide the same company name, facility name, and brief project description as on the application cover sheet Form CS**. This is useful if application pages are separated.

USE ATTACHMENT IF ADDITIONAL SPACE IS REQUIRED.

Baghouse Information:

4-5. Provide the baghouse manufacturer name and the model number.

6. Provide an identification number for the baghouse stack. This number is assigned by the applicant and must be provided on any other application materials which are submitted that include baghouse information.

7-9. Follow the instructions in the form. All documentation provided must be sufficient so that DEQ can verify the validity of the information provided. Provide the Baghouse Equipment ID number on all submitted documentation. If documentation is not provided the application is incomplete.

DEQ AIR QUALITY PROGRAM
1410 N. Hilton, Boise, ID 83706
For assistance, call the
Air Permit Hotline – 1-877-5PERMIT

Baghouse Control Equipment **Form BCE**
Revision 6
2/18/10

Complete this form for each baghouse. Please see instructions on page 2 before filling out the form.

IDENTIFICATION

1. Company Name	2. Facility Name:
Woodgrain Millwork Inc.	Fruitland Facility

3. Brief Project Description: Woodgrain Millwork Inc. Tier I permit renewal.

BAGHOUSE INFORMATION

4. Baghouse Manufacturer: Macron	5. Baghouse Model: N10	6. Baghouse Equipment ID: Baghouse N10 (P3)

7 (a). Baghouse particulate matter emission concentration. **Note: Provide information in 7(a)-(c) or answer question #8 below.**	0.001 lb/Bone Dry Ton gr/dscf	*Manufacturers typically provide guarantees in grains per dry standard cubic foot (gr/dscf). Provide a copy of the guarantee, or other documentation, with the application along with a description of the types of bags that must be used to achieve the emission concentration.* ***Emission concentrations less than 0.01 gr/dscf will receive additional scrutiny by DEQ and a source test of the baghouse may be required.*** *If a guarantee is not provided then you must document how you obtained the emission concentration. Without documentation the application is not complete.*
7 (b). Percentage PM_{10} Or Provide PM_{10} Emission Concentration	_____ % _____ gr/dscf	*What percentage of the PM concentration listed in question #7(a) is PM_{10}. You must provide documentation as to how the percentage was determined (i.e per the baghouse manufacturer). Without documentation the application is not complete.*
7 (c). Baghouse flow rate	6280 dscfm	*Provide the baghouse flow rate in dry standard cubic feet per minute. Actual cubic feet per minute may be given in lieu of dscfm* ***if it is documented*** *that moisture content is insignificant. You must provide documentation as to how this flow rate was determined (i.e. per the exhaust fan manufacturer, combustion evaluation, etc.). Without documentation the application is not complete.*
8. Baghouse particulate matter control efficiency. **Note: Not needed if section #7 is completed.**	_____ % PM control _____ % PM_{10} control	*Applicant's providing the control efficiency of the baghouse must provide control efficiency for both PM and PM_{10}. Provide a copy of the control efficiency documentation with the application. Documentation must include a description of the types of bags that must be used to achieve the control efficiency. Without documentation the application is not complete.*
9. Is the baghouse equipped with a bag leak detector?	☐ Yes ☒ No	*If a bag leak detector is installed provide documentation on the leak detector, including; how the leak detector functions and what level of the output signal indicates that a bag is leaking. Without documentation the application is not complete.*

Instructions for Form BCE

1 – 3. Provide the same company name, facility name, and brief project description as on the application cover sheet Form CS**. This is useful if application pages are separated.

USE ATTACHMENT IF ADDITIONAL SPACE IS REQUIRED.

Baghouse Information:

4-5. Provide the baghouse manufacturer name and the model number.

6. Provide an identification number for the baghouse stack. This number is assigned by the applicant and must be provided on any other application materials which are submitted that include baghouse information.

7-9. Follow the instructions in the form. All documentation provided must be sufficient so that DEQ can verify the validity of the information provided. Provide the Baghouse Equipment ID number on all submitted documentation. If documentation is not provided the application is incomplete.

DEQ AIR QUALITY PROGRAM
1410 N. Hilton, Boise, ID 83706
For assistance, call the
Air Permit Hotline – 1-877-5PERMIT

AIR PERMIT APPLICATION

Revision 6
10/7/09

For each box in the table below, CTRL+click on the blue underlined text for instructions and information.

IDENTIFICATION	
1. Company Name: Woodgrain Millwork Inc.	2. Facility Name: Fruitland Facility
3. Brief Project Description: Tier I (Title V) Permit Renewal Application - Permit T1-060054 Facility #075-00001	

APPLICABILITY DETERMINATION	
4. List applicable subparts of the New Source Performance Standards (NSPS) (40 CFR part 60). Examples of NSPS affected emissions units include internal combustion engines, boilers, turbines, etc. The applicant must thoroughly review the list of affected emissions units.	List of applicable subpart(s): None ☐ Not Applicable
5. List applicable subpart(s) of the National Emission Standards for Hazardous Air Pollutants (NESHAP) found in 40 CFR part 61 and 40 CFR part 63. Examples of affected emission units include solvent cleaning operations, industrial cooling towers, paint stripping and miscellaneous surface coating. EPA has a web page dedicated to NESHAP that should be useful to applicants.	List of applicable subpart(s): 40 CFR 63 Subpart ZZZZ Listed below with this document is the applical requirments for this unit. 347 hp. Operated less than 500 hours per year, emergency generator. Generator Meets Tier II standards. ☐ Not Applicable
6. For each subpart identified above, conduct a complete a regulatory analysis using the instructions and referencing the example provided on the following pages. **Note** - Regulatory reviews must be submitted with sufficient detail so that DEQ can verify applicability and document in legal terms why the regulation applies. Regulatory reviews that are submitted with insufficient detail will be determined incomplete.	☐ A detailed regulatory review is provided (Follow instructions and example). ☐ DEQ has already been provided a detailed regulatory review. Give a reference to the document including the date.

IF YOU ARE UNSURE HOW TO ANSWER ANY OF THESE QUESTIONS, CALL THE AIR PERMIT HOTLINE AT 1-877-5PERMIT

It is emphasized that it is the applicant's responsibility to satisfy all technical and regulatory requirements, and that DEQ will help the applicant understand what those requirements are prior to the application being submitted but that DEQ will not perform the required technical or regulatory analysis on the applicant's behalf.

Subpart ZZZZ—National Emissions Standards for Hazardous Air Pollutants for Stationary Reciprocating Internal Combustion Engines

Source: 69 FR 33506, June 15, 2004, unless otherwise noted.

What This Subpart Covers
§ 63.6580 What is the purpose of subpart ZZZZ?

Subpart ZZZZ establishes national emission limitations and operating limitations for hazardous air pollutants (HAP) emitted from stationary reciprocating internal combustion engines (RICE) located at major and area sources of HAP emissions. This subpart also establishes requirements to demonstrate initial and continuous compliance with the emission limitations and operating limitations.

Woodgrain owns and operates a stationary RICE located at an area source of HAP emisions. Woodgrain is therefore subject to the requirments of this subpart.

[73 FR 3603, Jan. 18, 2008]

§ 63.6585 Am I subject to this subpart?

You are subject to this subpart if you own or operate a stationary RICE at a major or area source of HAP emissions, except if the stationary RICE is being tested at a stationary RICE test cell/stand.

(a) A stationary RICE is any internal combustion engine which uses reciprocating motion to convert heat energy into mechanical work and which is not mobile. Stationary RICE differ from mobile RICE in that a stationary RICE is not a non-road engine as defined at 40 CFR 1068.30, and is not used to propel a motor vehicle or a vehicle used solely for competition.

(b) A major source of HAP emissions is a plant site that emits or has the potential to emit any single HAP at a rate of 10 tons (9.07 megagrams) or more per year or any combination of HAP at a rate of 25 tons (22.68 megagrams) or more per year, except that for oil and gas production facilities, a major source of HAP emissions is determined for each surface site.

(c) An area source of HAP emissions is a source that is not a major source.

(d) If you are an owner or operator of an area source subject to this subpart, your status as an entity subject to a standard or other requirements under this subpart does not subject you to the obligation to obtain a permit under 40 CFR part 70 or 71, provided you are not required to obtain a permit under 40 CFR 70.3(a) or 40 CFR 71.3(a) for a reason other than your status as an area source under this subpart. Notwithstanding the previous sentence, you must continue to comply with the provisions of this subpart as applicable.

(e) If you are an owner or operator of a stationary RICE used for national security purposes, you may be eligible to request an exemption from the requirements of this subpart as described in 40 CFR part 1068, subpart C.

Woodgrain is categorized as a major source of criteria emissions, therefore Woodgain has obtained permits under Part 70.

[69 FR 33506, June 15, 2004, as amended at 73 FR 3603, Jan. 18, 2008]

§ 63.6590 What parts of my plant does this subpart cover?

This subpart applies to each affected source.

(a) *Affected source.* An affected source is any existing, new, or reconstructed stationary RICE located at a major or area source of HAP emissions, excluding stationary RICE being tested at a stationary RICE test cell/stand.

(1) *Existing stationary RICE.*

(i) For stationary RICE with a site rating of more than 500 brake horsepower (HP) located at a major source of HAP emissions, a stationary RICE is existing if you commenced construction or reconstruction of the stationary RICE before December 19, 2002.

(ii) For stationary RICE with a site rating of less than or equal to 500 brake HP located at a major source of HAP emissions, a stationary RICE is existing if you commenced construction or reconstruction of the stationary RICE before June 12, 2006.

(iii) For stationary RICE located at an area source of HAP emissions, a stationary RICE is existing if you commenced construction or reconstruction of the stationary RICE before June 12, 2006.

(iv) A change in ownership of an existing stationary RICE does not make that stationary RICE a new or reconstructed stationary RICE.

(2) *New stationary RICE.* (i) A stationary RICE with a site rating of more than 500 brake HP located at a major source of HAP emissions is new if you commenced construction of the stationary RICE on or after December 19, 2002.

(ii) A stationary RICE with a site rating of equal to or less than 500 brake HP located at a major source of HAP emissions is new if you commenced construction of the stationary RICE on or after June 12, 2006.

(iii) A stationary RICE located at an area source of HAP emissions is new if you commenced construction of the stationary RICE on or after June 12, 2006.

(3) *Reconstructed stationary RICE.* (i) A stationary RICE with a site rating of more than 500 brake HP located at a major source of HAP emissions is reconstructed if you meet the definition of reconstruction in §63.2 and reconstruction is commenced on or after December 19, 2002.

(ii) A stationary RICE with a site rating of equal to or less than 500 brake HP located at a major source of HAP emissions is reconstructed if you meet the definition of reconstruction in §63.2 and reconstruction is commenced on or after June 12, 2006.

(iii) A stationary RICE located at an area source of HAP emissions is reconstructed if you meet the definition of reconstruction in §63.2 and reconstruction is commenced on or after June 12, 2006.

(b) *Stationary RICE subject to limited requirements.* (1) An affected source which meets either of the criteria in paragraphs (b)(1)(i) through (ii) of this section does not have to meet the requirements of this subpart and of subpart A of this part except for the initial notification requirements of §63.6645(f).

(i) The stationary RICE is a new or reconstructed emergency stationary RICE with a site rating of more than 500 brake HP located at a major source of HAP emissions.

(ii) The stationary RICE is a new or reconstructed limited use stationary RICE with a site rating of more than 500 brake HP located at a major source of HAP emissions.

(2) A new or reconstructed stationary RICE with a site rating of more than 500 brake HP located at a major source of HAP emissions which combusts landfill or digester gas equivalent to 10 percent or more of the gross heat input on an annual basis must meet the initial notification requirements of §63.6645(f) and the requirements of §§63.6625(c), 63.6650(g), and 63.6655(c). These stationary RICE do not have to meet the emission limitations and operating limitations of this subpart.

(3) The following stationary RICE do not have to meet the requirements of this subpart and of subpart A of this part, including initial notification requirements:

(i) Existing spark ignition 2 stroke lean burn (2SLB) stationary RICE with a site rating of more than 500 brake HP located at a major source of HAP emissions;

(ii) Existing spark ignition 4 stroke lean burn (4SLB) stationary RICE with a site rating of more than 500 brake HP located at a major source of HAP emissions;

(iii) Existing emergency stationary RICE with a site rating of more than 500 brake HP located at a major source of HAP emissions;

(iv) Existing limited use stationary RICE with a site rating of more than 500 brake HP located at a major source of HAP emissions;

(v) Existing stationary RICE with a site rating of more than 500 brake HP located at a major source of HAP emissions that combusts landfill gas or digester gas equivalent to 10 percent or more of the gross heat input on an annual basis;

(vi) Existing residential emergency stationary RICE located at an area source of HAP emissions;

(vii) Existing commercial emergency stationary RICE located at an area source of HAP emissions; or

(viii) Existing institutional emergency stationary RICE located at an area source of HAP emissions.

(c) *Stationary RICE subject to Regulations under 40 CFR Part 60.* An affected source that meets any of the criteria in paragraphs (c)(1) through (7) of this section must meet the requirements of this part by meeting the requirements of 40 CFR part 60 subpart IIII, for compression ignition engines or 40 CFR part 60 subpart JJJJ, for spark ignition engines. No further requirements apply for such engines under this part.

(1) A new or reconstructed stationary RICE located at an area source;

(2) A new or reconstructed 2SLB stationary RICE with a site rating of less than or equal to 500 brake HP located at a major source of HAP emissions;

(3) A new or reconstructed 4SLB stationary RICE with a site rating of less than 250 brake HP located at a major source of HAP emissions;

(4) A new or reconstructed spark ignition 4 stroke rich burn (4SRB) stationary RICE with a site rating of less than or equal to 500 brake HP located at a major source of HAP emissions;

(5) A new or reconstructed stationary RICE with a site rating of less than or equal to 500 brake HP located at a major source of HAP emissions which combusts landfill or digester gas equivalent to 10 percent or more of the gross heat input on an annual basis;

(6) A new or reconstructed emergency or limited use stationary RICE with a site rating of less than or equal to 500 brake HP located at a major source of HAP emissions;

(7) A new or reconstructed compression ignition (CI) stationary RICE with a site rating of less than or equal to 500 brake HP located at a major source of HAP emissions.

[69 FR 33506, June 15, 2004, as amended at 73 FR 3604, Jan. 18, 2008; 75 FR 9674, Mar. 3, 2010; 75 FR 37733, June 30, 2010; 75 FR 51588, Aug. 20, 2010]

§ 63.6595 When do I have to comply with this subpart?

(a) *Affected sources.* (1) If you have an existing stationary RICE, excluding existing non-emergency CI stationary RICE, with a site rating of more than 500 brake HP located at a major source of HAP emissions, you must comply with the applicable emission limitations and operating limitations no later than June 15, 2007. If you have an existing non-emergency CI stationary RICE with a site rating of more than 500 brake HP located at a major source of HAP emissions, an existing stationary CI RICE with a site rating of less than or equal to 500 brake HP located at a major source of HAP emissions, or an existing stationary CI RICE located at an area source of HAP emissions, you must comply with the applicable emission limitations and operating limitations no later than May 3, 2013. If you have an existing stationary SI RICE with a site rating of less than or equal to 500 brake HP located at a major source of HAP emissions, or an existing stationary SI RICE located at an area source of HAP emissions, you must comply with the applicable emission limitations and operating limitations no later than October 19, 2013.

(2) If you start up your new or reconstructed stationary RICE with a site rating of more than 500 brake HP located at a major source of HAP emissions before August 16, 2004, you must comply with the applicable emission limitations and operating limitations in this subpart no later than August 16, 2004.

(3) If you start up your new or reconstructed stationary RICE with a site rating of more than 500 brake HP located at a major source of HAP emissions after August 16, 2004, you must comply with the applicable emission limitations and operating limitations in this subpart upon startup of your affected source.

(4) If you start up your new or reconstructed stationary RICE with a site rating of less than or equal to 500 brake HP located at a major source of HAP emissions before January 18, 2008, you must comply with the applicable emission limitations and operating limitations in this subpart no later than January 18, 2008.

(5) If you start up your new or reconstructed stationary RICE with a site rating of less than or equal to 500 brake HP located at a major source of HAP emissions after January 18, 2008, you must comply with the applicable emission limitations and operating limitations in this subpart upon startup of your affected source.

(6) If you start up your new or reconstructed stationary RICE located at an area source of HAP emissions before January 18, 2008, you must comply with the applicable emission limitations and operating limitations in this subpart no later than January 18, 2008.

(7) If you start up your new or reconstructed stationary RICE located at an area source of HAP emissions after January 18, 2008, you must comply with the applicable emission limitations and operating limitations in this subpart upon startup of your affected source.

(b) *Area sources that become major sources.* If you have an area source that increases its emissions or its potential to emit such that it becomes a major source of HAP, the compliance dates in paragraphs (b)(1) and (2) of this section apply to you.

(1) Any stationary RICE for which construction or reconstruction is commenced after the date when your area source becomes a major source of HAP must be in compliance with this subpart upon startup of your affected source.

(2) Any stationary RICE for which construction or reconstruction is commenced before your area source becomes a major source of HAP must be in compliance with the provisions of this subpart that are applicable to RICE located at major sources within 3 years after your area source becomes a major source of HAP.

(c) If you own or operate an affected source, you must meet the applicable notification requirements in §63.6645 and in 40 CFR part 63, subpart A.

[69 FR 33506, June 15, 2004, as amended at 73 FR 3604, Jan. 18, 2008; 75 FR 9675, Mar. 3, 2010; 75 FR 51589, Aug. 20, 2010]

Emission and Operating Limitations

§ 63.6600 What emission limitations and operating limitations must I meet if I own or operate a stationary RICE with a site rating of more than 500 brake HP located at a major source of HAP emissions?

Compliance with the numerical emission limitations established in this subpart is based on the results of testing the average of three 1-hour runs using the testing requirements and procedures in §63.6620 and Table 4 to this subpart.

(a) If you own or operate an existing, new, or reconstructed spark ignition 4SRB stationary RICE with a site rating of more than 500 brake HP located at a major source of HAP emissions, you must comply with the emission limitations in Table 1a to this subpart and the operating limitations in Table 1b to this subpart which apply to you.

(b) If you own or operate a new or reconstructed 2SLB stationary RICE with a site rating of more than 500 brake HP located at major source of HAP emissions, a new or reconstructed 4SLB stationary RICE with a site rating of more than 500 brake HP located at major source of HAP emissions, or a new or reconstructed CI stationary RICE with a site rating of more than 500 brake HP located at a major source of HAP emissions, you must comply with the emission limitations in Table 2a to this subpart and the operating limitations in Table 2b to this subpart which apply to you.

(c) If you own or operate any of the following stationary RICE with a site rating of more than 500 brake HP located at a major source of HAP emissions, you do not need to comply with the emission limitations in Tables 1a, 2a, 2c, and 2d to this subpart or operating limitations in Tables 1b and 2b to this subpart: an existing 2SLB stationary

RICE; an existing 4SLB stationary RICE; a stationary RICE that combusts landfill gas or digester gas equivalent to 10 percent or more of the gross heat input on an annual basis; an emergency stationary RICE; or a limited use stationary RICE.

(d) If you own or operate an existing non-emergency stationary CI RICE with a site rating of more than 500 brake HP located at a major source of HAP emissions, you must comply with the emission limitations in Table 2c to this subpart and the operating limitations in Table 2b to this subpart which apply to you.

[73 FR 3605, Jan. 18, 2008, as amended at 75 FR 9675, Mar. 3, 2010]

§ 63.6601 What emission limitations must I meet if I own or operate a new or reconstructed 4SLB stationary RICE with a site rating of greater than or equal to 250 brake HP and less than or equal to 500 brake HP located at a major source of HAP emissions?

Compliance with the numerical emission limitations established in this subpart is based on the results of testing the average of three 1-hour runs using the testing requirements and procedures in §63.6620 and Table 4 to this subpart. If you own or operate a new or reconstructed 4SLB stationary RICE with a site rating of greater than or equal to 250 and less than or equal to 500 brake HP located at major source of HAP emissions manufactured on or after January 1, 2008, you must comply with the emission limitations in Table 2a to this subpart and the operating limitations in Table 2b to this subpart which apply to you.

[73 FR 3605, Jan. 18, 2008, as amended at 75 FR 9675, Mar. 3, 2010; 75 FR 51589, Aug. 20, 2010]

§ 63.6602 What emission limitations must I meet if I own or operate an existing stationary RICE with a site rating of equal to or less than 500 brake HP located at a major source of HAP emissions?

If you own or operate an existing stationary RICE with a site rating of equal to or less than 500 brake HP located at a major source of HAP emissions, you must comply with the emission limitations in Table 2c to this subpart which apply to you. Compliance with the numerical emission limitations established in this subpart is based on the results of testing the average of three 1-hour runs using the testing requirements and procedures in §63.6620 and Table 4 to this subpart.

[75 FR 51589, Aug. 20, 2010]

§ 63.6603 What emission limitations and operating limitations must I meet if I own or operate an existing stationary RICE located at an area source of HAP emissions?

Compliance with the numerical emission limitations established in this subpart is based on the results of testing the average of three 1-hour runs using the testing requirements and procedures in §63.6620 and Table 4 to this subpart.

(a) If you own or operate an existing stationary RICE located at an area source of HAP emissions, you must comply with the requirements in Table 2d to this subpart and the operating limitations in Table 1b and Table 2b to this subpart that apply to you.

(b) If you own or operate an existing stationary non-emergency CI RICE greater than 300 HP located at area sources in areas of Alaska not accessible by the Federal Aid Highway System (FAHS) you do not have to meet the numerical CO emission limitations specified in Table 2d to this subpart. Existing stationary non-emergency CI RICE greater than 300 HP located at area sources in areas of Alaska not accessible by the FAHS must meet the management practices that are shown for stationary non-emergency CI RICE less than or equal to 300 HP in Table 2d to this subpart.

[75 FR 9675, Mar. 3, 2010, as amended at 75 FR 51589, Aug. 20, 2010; 76 FR 12866, Mar. 9, 2011]

§ 63.6604 What fuel requirements must I meet if I own or operate an existing stationary CI RICE?

If you own or operate an existing non-emergency, non-black start CI stationary RICE with a site rating of more than 300 brake HP with a displacement of less than 30 liters per cylinder that uses diesel fuel, you must use diesel fuel that meets the requirements in 40 CFR 80.510(b) for nonroad diesel fuel. Existing non-emergency CI stationary RICE located in Guam, American Samoa, the Commonwealth of the Northern Mariana Islands, or at area sources in areas of Alaska not accessible by the FAHS are exempt from the requirements of this section.

[75 FR 51589, Aug. 20, 2010]

General Compliance Requirements

§ 63.6605 What are my general requirements for complying with this subpart?

(a) You must be in compliance with the emission limitations and operating limitations in this subpart that apply to you at all times.

(b) At all times you must operate and maintain any affected source, including associated air pollution control equipment and monitoring equipment, in a manner consistent with safety and good air pollution control practices for minimizing emissions. The general duty to minimize emissions does not require you to make any further efforts to reduce emissions if levels required by this standard have been achieved. Determination of whether such operation and maintenance procedures are being used will be based on information available to the Administrator which may include, but is not limited to, monitoring results, review of operation and maintenance procedures, review of operation and maintenance records, and inspection of the source.

[75 FR 9675, Mar. 3, 2010]

Testing and Initial Compliance Requirements

§ 63.6610 By what date must I conduct the initial performance tests or other initial compliance demonstrations if I own or operate a stationary RICE with a site rating of more than 500 brake HP located at a major source of HAP emissions?

If you own or operate a stationary RICE with a site rating of more than 500 brake HP located at a major source of HAP emissions you are subject to the requirements of this section.

(a) You must conduct the initial performance test or other initial compliance demonstrations in Table 4 to this subpart that apply to you within 180 days after the compliance date that is specified for your stationary RICE in §63.6595 and according to the provisions in §63.7(a)(2).

(b) If you commenced construction or reconstruction between December 19, 2002 and June 15, 2004 and own or operate stationary RICE with a site rating of more than 500 brake HP located at a major source of HAP emissions, you must demonstrate initial compliance with either the proposed emission limitations or the promulgated emission limitations no later than February 10, 2005 or no later than 180 days after startup of the source, whichever is later, according to §63.7(a)(2)(ix).

(c) If you commenced construction or reconstruction between December 19, 2002 and June 15, 2004 and own or operate stationary RICE with a site rating of more than 500 brake HP located at a major source of HAP emissions, and you chose to comply with the proposed emission limitations when demonstrating initial compliance, you must conduct a second performance test to demonstrate compliance with the promulgated emission limitations by December 13, 2007 or after startup of the source, whichever is later, according to §63.7(a)(2)(ix).

(d) An owner or operator is not required to conduct an initial performance test on units for which a performance test has been previously conducted, but the test must meet all of the conditions described in paragraphs (d)(1) through (5) of this section.

(1) The test must have been conducted using the same methods specified in this subpart, and these methods must have been followed correctly.

(2) The test must not be older than 2 years.

(3) The test must be reviewed and accepted by the Administrator.

(4) Either no process or equipment changes must have been made since the test was performed, or the owner or operator must be able to demonstrate that the results of the performance test, with or without adjustments, reliably demonstrate compliance despite process or equipment changes.

(5) The test must be conducted at any load condition within plus or minus 10 percent of 100 percent load.

[69 FR 33506, June 15, 2004, as amended at 73 FR 3605, Jan. 18, 2008]

§ 63.6611 By what date must I conduct the initial performance tests or other initial compliance demonstrations if I own or operate a new or reconstructed 4SLB SI stationary RICE with a site rating of greater than or equal to 250 and less than or equal to 500 brake HP located at a major source of HAP emissions?

If you own or operate a new or reconstructed 4SLB stationary RICE with a site rating of greater than or equal to 250 and less than or equal to 500 brake HP located at a major source of HAP emissions, you must conduct an initial performance test within 240 days after the compliance date that is specified for your stationary RICE in §63.6595 and according to the provisions specified in Table 4 to this subpart, as appropriate.

[73 FR 3605, Jan. 18, 2008, as amended at 75 FR 51589, Aug. 20, 2010]

§ 63.6612 By what date must I conduct the initial performance tests or other initial compliance demonstrations if I own or operate an existing stationary RICE with a site rating of less than or equal to 500 brake HP located at a major source of HAP emissions or an existing stationary RICE located at an area source of HAP emissions?

If you own or operate an existing stationary RICE with a site rating of less than or equal to 500 brake HP located at a major source of HAP emissions or an existing stationary RICE located at an area source of HAP emissions you are subject to the requirements of this section.

(a) You must conduct any initial performance test or other initial compliance demonstration according to Tables 4 and 5 to this subpart that apply to you within 180 days after the compliance date that is specified for your stationary RICE in §63.6595 and according to the provisions in §63.7(a)(2).

(b) An owner or operator is not required to conduct an initial performance test on a unit for which a performance test has been previously conducted, but the test must meet all of the conditions described in paragraphs (b)(1) through (4) of this section.

(1) The test must have been conducted using the same methods specified in this subpart, and these methods must have been followed correctly.

(2) The test must not be older than 2 years.

(3) The test must be reviewed and accepted by the Administrator.

(4) Either no process or equipment changes must have been made since the test was performed, or the owner or operator must be able to demonstrate that the results of the performance test, with or without adjustments, reliably demonstrate compliance despite process or equipment changes.

[75 FR 9676, Mar. 3, 2010, as amended at 75 FR 51589, Aug. 20, 2010]

§ 63.6615 When must I conduct subsequent performance tests?

If you must comply with the emission limitations and operating limitations, you must conduct subsequent performance tests as specified in Table 3 of this subpart.

§ 63.6620 What performance tests and other procedures must I use?

(a) You must conduct each performance test in Tables 3 and 4 of this subpart that applies to you.

(b) Each performance test must be conducted according to the requirements that this subpart specifies in Table 4 to this subpart. If you own or operate a non-operational stationary RICE that is subject to performance testing, you do not need to start up the engine solely to conduct the performance test. Owners and operators of a non-operational engine can conduct the performance test when the engine is started up again.

(c) [Reserved]

(d) You must conduct three separate test runs for each performance test required in this section, as specified in §63.7(e)(3). Each test run must last at least 1 hour.

(e)(1) You must use Equation 1 of this section to determine compliance with the percent reduction requirement:

$$\frac{C_i - C_o}{C_i} \times 100 = R \qquad \text{(Eq. 1)}$$

Where:

C_i= concentration of CO or formaldehyde at the control device inlet,

C_o= concentration of CO or formaldehyde at the control device outlet, and

R = percent reduction of CO or formaldehyde emissions.

(2) You must normalize the carbon monoxide (CO) or formaldehyde concentrations at the inlet and outlet of the control device to a dry basis and to 15 percent oxygen, or an

equivalent percent carbon dioxide (CO_2). If pollutant concentrations are to be corrected to 15 percent oxygen and CO_2concentration is measured in lieu of oxygen concentration measurement, a CO_2correction factor is needed. Calculate the CO_2correction factor as described in paragraphs (e)(2)(i) through (iii) of this section.

(i) Calculate the fuel-specific $F_o$value for the fuel burned during the test using values obtained from Method 19, section 5.2, and the following equation:

$$F_o = \frac{0.209\, F_d}{F_c} \qquad \text{(Eq. 2)}$$

Where:

F_o= Fuel factor based on the ratio of oxygen volume to the ultimate CO_2volume produced by the fuel at zero percent excess air.

0.209 = Fraction of air that is oxygen, percent/100.

F_d= Ratio of the volume of dry effluent gas to the gross calorific value of the fuel from Method 19, dsm^3 /J (dscf/10^6 Btu).

F_c= Ratio of the volume of CO_2produced to the gross calorific value of the fuel from Method 19, dsm^3 /J (dscf/10^6 Btu).

(ii) Calculate the CO_2correction factor for correcting measurement data to 15 percent oxygen, as follows:

$$X_{co_2} = \frac{5.9}{F_o} \qquad \text{(Eq. 3)}$$

Where:

X_{co2}= CO_2correction factor, percent.

5.9 = 20.9 percent O_2−15 percent O_2, the defined O_2correction value, percent.

(iii) Calculate the $NO_X$and SO_2gas concentrations adjusted to 15 percent O_2using CO_2as follows:

$$C_{adj} = C_d \frac{X_{co_2}}{\%CO_2} \qquad \text{(Eq. 4)}$$

Where:

$\%CO_2$= Measured CO_2concentration measured, dry basis, percent.

(f) If you comply with the emission limitation to reduce CO and you are not using an oxidation catalyst, if you comply with the emission limitation to reduce formaldehyde and you are not using NSCR, or if you comply with the emission limitation to limit the concentration of formaldehyde in the stationary RICE exhaust and you are not using an oxidation catalyst or NSCR, you must petition the Administrator for operating limitations to be established during the initial performance test and continuously monitored thereafter; or for approval of no operating limitations. You must not conduct the initial performance test until after the petition has been approved by the Administrator.

(g) If you petition the Administrator for approval of operating limitations, your petition must include the information described in paragraphs (g)(1) through (5) of this section.

(1) Identification of the specific parameters you propose to use as operating limitations;

(2) A discussion of the relationship between these parameters and HAP emissions, identifying how HAP emissions change with changes in these parameters, and how limitations on these parameters will serve to limit HAP emissions;

(3) A discussion of how you will establish the upper and/or lower values for these parameters which will establish the limits on these parameters in the operating limitations;

(4) A discussion identifying the methods you will use to measure and the instruments you will use to monitor these parameters, as well as the relative accuracy and precision of these methods and instruments; and

(5) A discussion identifying the frequency and methods for recalibrating the instruments you will use for monitoring these parameters.

(h) If you petition the Administrator for approval of no operating limitations, your petition must include the information described in paragraphs (h)(1) through (7) of this section.

(1) Identification of the parameters associated with operation of the stationary RICE and any emission control device which could change intentionally (*e.g.,* operator adjustment,

automatic controller adjustment, etc.) or unintentionally (*e.g.,* wear and tear, error, etc.) on a routine basis or over time;

(2) A discussion of the relationship, if any, between changes in the parameters and changes in HAP emissions;

(3) For the parameters which could change in such a way as to increase HAP emissions, a discussion of whether establishing limitations on the parameters would serve to limit HAP emissions;

(4) For the parameters which could change in such a way as to increase HAP emissions, a discussion of how you could establish upper and/or lower values for the parameters which would establish limits on the parameters in operating limitations;

(5) For the parameters, a discussion identifying the methods you could use to measure them and the instruments you could use to monitor them, as well as the relative accuracy and precision of the methods and instruments;

(6) For the parameters, a discussion identifying the frequency and methods for recalibrating the instruments you could use to monitor them; and

(7) A discussion of why, from your point of view, it is infeasible or unreasonable to adopt the parameters as operating limitations.

(i) The engine percent load during a performance test must be determined by documenting the calculations, assumptions, and measurement devices used to measure or estimate the percent load in a specific application. A written report of the average percent load determination must be included in the notification of compliance status. The following information must be included in the written report: the engine model number, the engine manufacturer, the year of purchase, the manufacturer's site-rated brake horsepower, the ambient temperature, pressure, and humidity during the performance test, and all assumptions that were made to estimate or calculate percent load during the performance test must be clearly explained. If measurement devices such as flow meters, kilowatt meters, beta analyzers, stain gauges, etc. are used, the model number of the measurement device, and an estimate of its accurate in percentage of true value must be provided.

[69 FR 33506, June 15, 2004, as amended at 75 FR 9676, Mar. 3, 2010]

§ 63.6625 What are my monitoring, installation, collection, operation, and maintenance requirements?

(a) If you elect to install a CEMS as specified in Table 5 of this subpart, you must install, operate, and maintain a CEMS to monitor CO and either oxygen or CO_2at both the inlet

and the outlet of the control device according to the requirements in paragraphs (a)(1) through (4) of this section.

(1) Each CEMS must be installed, operated, and maintained according to the applicable performance specifications of 40 CFR part 60, appendix B.

(2) You must conduct an initial performance evaluation and an annual relative accuracy test audit (RATA) of each CEMS according to the requirements in §63.8 and according to the applicable performance specifications of 40 CFR part 60, appendix B as well as daily and periodic data quality checks in accordance with 40 CFR part 60, appendix F, procedure 1.

(3) As specified in §63.8(c)(4)(ii), each CEMS must complete a minimum of one cycle of operation (sampling, analyzing, and data recording) for each successive 15-minute period. You must have at least two data points, with each representing a different 15-minute period, to have a valid hour of data.

(4) The CEMS data must be reduced as specified in §63.8(g)(2) and recorded in parts per million or parts per billion (as appropriate for the applicable limitation) at 15 percent oxygen or the equivalent CO_2concentration.

(b) If you are required to install a continuous parameter monitoring system (CPMS) as specified in Table 5 of this subpart, you must install, operate, and maintain each CPMS according to the requirements in paragraphs (b)(1) through (5) of this section. For an affected source that is complying with the emission limitations and operating limitations on March 9, 2011, the requirements in paragraph (b) of this section are applicable September 6, 2011.

(1) You must prepare a site-specific monitoring plan that addresses the monitoring system design, data collection, and the quality assurance and quality control elements outlined in paragraphs (b)(1)(i) through (v) of this section and in §63.8(d). As specified in §63.8(f)(4), you may request approval of monitoring system quality assurance and quality control procedures alternative to those specified in paragraphs (b)(1) through (5) of this section in your site-specific monitoring plan.

(i) The performance criteria and design specifications for the monitoring system equipment, including the sample interface, detector signal analyzer, and data acquisition and calculations;

(ii) Sampling interface (*e.g.,* thermocouple) location such that the monitoring system will provide representative measurements;

(iii) Equipment performance evaluations, system accuracy audits, or other audit procedures;

(iv) Ongoing operation and maintenance procedures in accordance with provisions in §63.8(c)(1) and (c)(3); and

(v) Ongoing reporting and recordkeeping procedures in accordance with provisions in §63.10(c), (e)(1), and (e)(2)(i).

(2) You must install, operate, and maintain each CPMS in continuous operation according to the procedures in your site-specific monitoring plan.

(3) The CPMS must collect data at least once every 15 minutes (see also §63.6635).

(4) For a CPMS for measuring temperature range, the temperature sensor must have a minimum tolerance of 2.8 degrees Celsius (5 degrees Fahrenheit) or 1 percent of the measurement range, whichever is larger.

(5) You must conduct the CPMS equipment performance evaluation, system accuracy audits, or other audit procedures specified in your site-specific monitoring plan at least annually.

(6) You must conduct a performance evaluation of each CPMS in accordance with your site-specific monitoring plan.

(c) If you are operating a new or reconstructed stationary RICE which fires landfill gas or digester gas equivalent to 10 percent or more of the gross heat input on an annual basis, you must monitor and record your fuel usage daily with separate fuel meters to measure the volumetric flow rate of each fuel. In addition, you must operate your stationary RICE in a manner which reasonably minimizes HAP emissions.

(d) If you are operating a new or reconstructed emergency 4SLB stationary RICE with a site rating of greater than or equal to 250 and less than or equal to 500 brake HP located at a major source of HAP emissions, you must install a non-resettable hour meter prior to the startup of the engine.

(e) If you own or operate any of the following stationary RICE, you must operate and maintain the stationary RICE and after-treatment control device (if any) according to the manufacturer's emission-related written instructions or develop your own maintenance plan which must provide to the extent practicable for the maintenance and operation of the engine in a manner consistent with good air pollution control practice for minimizing emissions:

(1) An existing stationary RICE with a site rating of less than 100 HP located at a major source of HAP emissions;

(2) An existing emergency or black start stationary RICE with a site rating of less than or equal to 500 HP located at a major source of HAP emissions;

(3) An existing emergency or black start stationary RICE located at an area source of HAP emissions;

(4) An existing non-emergency, non-black start stationary CI RICE with a site rating less than or equal to 300 HP located at an area source of HAP emissions;

(5) An existing non-emergency, non-black start 2SLB stationary RICE located at an area source of HAP emissions;

(6) An existing non-emergency, non-black start landfill or digester gas stationary RICE located at an area source of HAP emissions;

(7) An existing non-emergency, non-black start 4SLB stationary RICE with a site rating less than or equal to 500 HP located at an area source of HAP emissions;

(8) An existing non-emergency, non-black start 4SRB stationary RICE with a site rating less than or equal to 500 HP located at an area source of HAP emissions;

(9) An existing, non-emergency, non-black start 4SLB stationary RICE with a site rating greater than 500 HP located at an area source of HAP emissions that is operated 24 hours or less per calendar year; and

(10) An existing, non-emergency, non-black start 4SRB stationary RICE with a site rating greater than 500 HP located at an area source of HAP emissions that is operated 24 hours or less per calendar year.

(f) If you own or operate an existing emergency stationary RICE with a site rating of less than or equal to 500 brake HP located at a major source of HAP emissions or an existing emergency stationary RICE located at an area source of HAP emissions, you must install a non-resettable hour meter if one is not already installed.

(g) If you own or operate an existing non-emergency, non-black start CI engine greater than or equal to 300 HP that is not equipped with a closed crankcase ventilation system, you must comply with either paragraph (g)(1) or paragraph (g)(2) of this section. Owners and operators must follow the manufacturer's specified maintenance requirements for operating and maintaining the open or closed crankcase ventilation systems and replacing the crankcase filters, or can request the Administrator to approve different maintenance requirements that are as protective as manufacturer requirements. Existing CI engines located at area sources in areas of Alaska not accessible by the FAHS do not have to meet the requirements of paragraph (g) of this section.

(1) Install a closed crankcase ventilation system that prevents crankcase emissions from being emitted to the atmosphere, or

(2) Install an open crankcase filtration emission control system that reduces emissions from the crankcase by filtering the exhaust stream to remove oil mist, particulates, and metals.

(h) If you operate a new, reconstructed, or existing stationary engine, you must minimize the engine's time spent at idle during startup and minimize the engine's startup time to a period needed for appropriate and safe loading of the engine, not to exceed 30 minutes, after which time the emission standards applicable to all times other than startup in Tables 1a, 2a, 2c, and 2d to this subpart apply.

(i) If you own or operate a stationary CI engine that is subject to the work, operation or management practices in items 1 or 2 of Table 2c to this subpart or in items 1 or 4 of Table 2d to this subpart, you have the option of utilizing an oil analysis program in order to extend the specified oil change requirement in Tables 2c and 2d to this subpart. The oil analysis must be performed at the same frequency specified for changing the oil in Table 2c or 2d to this subpart. The analysis program must at a minimum analyze the following three parameters: Total Base Number, viscosity, and percent water content. The condemning limits for these parameters are as follows: Total Base Number is less than 30 percent of the Total Base Number of the oil when new; viscosity of the oil has changed by more than 20 percent from the viscosity of the oil when new; or percent water content (by volume) is greater than 0.5. If all of these condemning limits are not exceeded, the engine owner or operator is not required to change the oil. If any of the limits are exceeded, the engine owner or operator must change the oil within 2 days of receiving the results of the analysis; if the engine is not in operation when the results of the analysis are received, the engine owner or operator must change the oil within 2 days or before commencing operation, whichever is later. The owner or operator must keep records of the parameters that are analyzed as part of the program, the results of the analysis, and the oil changes for the engine. The analysis program must be part of the maintenance plan for the engine.

(j) If you own or operate a stationary SI engine that is subject to the work, operation or management practices in items 6, 7, or 8 of Table 2c to this subpart or in items 5, 6, 7, 9, or 11 of Table 2d to this subpart, you have the option of utilizing an oil analysis program in order to extend the specified oil change requirement in Tables 2c and 2d to this subpart. The oil analysis must be performed at the same frequency specified for changing the oil in Table 2c or 2d to this subpart. The analysis program must at a minimum analyze the following three parameters: Total Acid Number, viscosity, and percent water content. The condemning limits for these parameters are as follows: Total Acid Number increases by more than 3.0 milligrams of potassium hydroxide (KOH) per gram from Total Acid Number of the oil when new; viscosity of the oil has changed by more than 20 percent from the viscosity of the oil when new; or percent water content (by volume) is greater than 0.5. If all of these condemning limits are not exceeded, the engine owner or operator is not required to change the oil. If any of the limits are exceeded, the engine owner or operator must change the oil within 2 days of receiving the results of the analysis; if the

engine is not in operation when the results of the analysis are received, the engine owner or operator must change the oil within 2 days or before commencing operation, whichever is later. The owner or operator must keep records of the parameters that are analyzed as part of the program, the results of the analysis, and the oil changes for the engine. The analysis program must be part of the maintenance plan for the engine.

[69 FR 33506, June 15, 2004, as amended at 73 FR 3606, Jan. 18, 2008; 75 FR 9676, Mar. 3, 2010; 75 FR 51589, Aug. 20, 2010; 76 FR 12866, Mar. 9, 2011]

§ 63.6630 How do I demonstrate initial compliance with the emission limitations and operating limitations?

(a) You must demonstrate initial compliance with each emission and operating limitation that applies to you according to Table 5 of this subpart.

(b) During the initial performance test, you must establish each operating limitation in Tables 1b and 2b of this subpart that applies to you.

(c) You must submit the Notification of Compliance Status containing the results of the initial compliance demonstration according to the requirements in §63.6645.

Continuous Compliance Requirements

§ 63.6635 How do I monitor and collect data to demonstrate continuous compliance?

(a) If you must comply with emission and operating limitations, you must monitor and collect data according to this section.

(b) Except for monitor malfunctions, associated repairs, required performance evaluations, and required quality assurance or control activities, you must monitor continuously at all times that the stationary RICE is operating. A monitoring malfunction is any sudden, infrequent, not reasonably preventable failure of the monitoring to provide valid data. Monitoring failures that are caused in part by poor maintenance or careless operation are not malfunctions.

(c) You may not use data recorded during monitoring malfunctions, associated repairs, and required quality assurance or control activities in data averages and calculations used to report emission or operating levels. You must, however, use all the valid data collected during all other periods.

[69 FR 33506, June 15, 2004, as amended at 76 FR 12867, Mar. 9, 2011]

§ 63.6640 How do I demonstrate continuous compliance with the emission limitations and operating limitations?

(a) You must demonstrate continuous compliance with each emission limitation and operating limitation in Tables 1a and 1b, Tables 2a and 2b, Table 2c, and Table 2d to this subpart that apply to you according to methods specified in Table 6 to this subpart.

(b) You must report each instance in which you did not meet each emission limitation or operating limitation in Tables 1a and 1b, Tables 2a and 2b, Table 2c, and Table 2d to this subpart that apply to you. These instances are deviations from the emission and operating limitations in this subpart. These deviations must be reported according to the requirements in §63.6650. If you change your catalyst, you must reestablish the values of the operating parameters measured during the initial performance test. When you reestablish the values of your operating parameters, you must also conduct a performance test to demonstrate that you are meeting the required emission limitation applicable to your stationary RICE.

(c) [Reserved]

(d) For new, reconstructed, and rebuilt stationary RICE, deviations from the emission or operating limitations that occur during the first 200 hours of operation from engine startup (engine burn-in period) are not violations. Rebuilt stationary RICE means a stationary RICE that has been rebuilt as that term is defined in 40 CFR 94.11(a).

(e) You must also report each instance in which you did not meet the requirements in Table 8 to this subpart that apply to you. If you own or operate a new or reconstructed stationary RICE with a site rating of less than or equal to 500 brake HP located at a major source of HAP emissions (except new or reconstructed 4SLB engines greater than or equal to 250 and less than or equal to 500 brake HP), a new or reconstructed stationary RICE located at an area source of HAP emissions, or any of the following RICE with a site rating of more than 500 brake HP located at a major source of HAP emissions, you do not need to comply with the requirements in Table 8 to this subpart: An existing 2SLB stationary RICE, an existing 4SLB stationary RICE, an existing emergency stationary RICE, an existing limited use stationary RICE, or an existing stationary RICE which fires landfill gas or digester gas equivalent to 10 percent or more of the gross heat input on an annual basis. If you own or operate any of the following RICE with a site rating of more than 500 brake HP located at a major source of HAP emissions, you do not need to comply with the requirements in Table 8 to this subpart, except for the initial notification requirements: a new or reconstructed stationary RICE that combusts landfill gas or digester gas equivalent to 10 percent or more of the gross heat input on an annual basis, a new or reconstructed emergency stationary RICE, or a new or reconstructed limited use stationary RICE.

(f) *Requirements for emergency stationary RICE.* (1) If you own or operate an existing emergency stationary RICE with a site rating of less than or equal to 500 brake HP

located at a major source of HAP emissions, a new or reconstructed emergency stationary RICE with a site rating of more than 500 brake HP located at a major source of HAP emissions that was installed on or after June 12, 2006, or an existing emergency stationary RICE located at an area source of HAP emissions, you must operate the emergency stationary RICE according to the requirements in paragraphs (f)(1)(i) through (iii) of this section. Any operation other than emergency operation, maintenance and testing, and operation in non-emergency situations for 50 hours per year, as described in paragraphs (f)(1)(i) through (iii) of this section, is prohibited. If you do not operate the engine according to the requirements in paragraphs (f)(1)(i) through (iii) of this section, the engine will not be considered an emergency engine under this subpart and will need to meet all requirements for non-emergency engines.

(i) There is no time limit on the use of emergency stationary RICE in emergency situations.

(ii) You may operate your emergency stationary RICE for the purpose of maintenance checks and readiness testing, provided that the tests are recommended by Federal, State or local government, the manufacturer, the vendor, or the insurance company associated with the engine. Maintenance checks and readiness testing of such units is limited to 100 hours per year. The owner or operator may petition the Administrator for approval of additional hours to be used for maintenance checks and readiness testing, but a petition is not required if the owner or operator maintains records indicating that Federal, State, or local standards require maintenance and testing of emergency RICE beyond 100 hours per year.

(iii) You may operate your emergency stationary RICE up to 50 hours per year in non-emergency situations, but those 50 hours are counted towards the 100 hours per year provided for maintenance and testing. The 50 hours per year for non-emergency situations cannot be used for peak shaving or to generate income for a facility to supply power to an electric grid or otherwise supply power as part of a financial arrangement with another entity; except that owners and operators may operate the emergency engine for a maximum of 15 hours per year as part of a demand response program if the regional transmission organization or equivalent balancing authority and transmission operator has determined there are emergency conditions that could lead to a potential electrical blackout, such as unusually low frequency, equipment overload, capacity or energy deficiency, or unacceptable voltage level. The engine may not be operated for more than 30 minutes prior to the time when the emergency condition is expected to occur, and the engine operation must be terminated immediately after the facility is notified that the emergency condition is no longer imminent. The 15 hours per year of demand response operation are counted as part of the 50 hours of operation per year provided for non-emergency situations. The supply of emergency power to another entity or entities pursuant to financial arrangement is not limited by this paragraph (f)(1)(iii), as long as the power provided by the financial arrangement is limited to emergency power.

(2) If you own or operate an emergency stationary RICE with a site rating of more than 500 brake HP located at a major source of HAP emissions that was installed prior to June 12, 2006, you must operate the engine according to the conditions described in paragraphs (f)(2)(i) through (iii) of this section. If you do not operate the engine according to the requirements in paragraphs (f)(2)(i) through (iii) of this section, the engine will not be considered an emergency engine under this subpart and will need to meet all requirements for non-emergency engines.

(i) There is no time limit on the use of emergency stationary RICE in emergency situations.

(ii) You may operate your emergency stationary RICE for the purpose of maintenance checks and readiness testing, provided that the tests are recommended by the manufacturer, the vendor, or the insurance company associated with the engine. Required testing of such units should be minimized, but there is no time limit on the use of emergency stationary RICE in emergency situations and for routine testing and maintenance.

(iii) You may operate your emergency stationary RICE for an additional 50 hours per year in non-emergency situations. The 50 hours per year for non-emergency situations cannot be used for peak shaving or to generate income for a facility to supply power to an electric grid or otherwise supply power as part of a financial arrangement with another entity.

[69 FR 33506, June 15, 2004, as amended at 71 FR 20467, Apr. 20, 2006; 73 FR 3606, Jan. 18, 2008; 75 FR 9676, Mar. 3, 2010; 75 FR 51591, Aug. 20, 2010]

Notifications, Reports, and Records
§ 63.6645 What notifications must I submit and when?

(a) You must submit all of the notifications in §§63.7(b) and (c), 63.8(e), (f)(4) and (f)(6), 63.9(b) through (e), and (g) and (h) that apply to you by the dates specified if you own or operate any of the following;

(1) An existing stationary RICE with a site rating of less than or equal to 500 brake HP located at a major source of HAP emissions.

(2) An existing stationary RICE located at an area source of HAP emissions.

(3) A stationary RICE with a site rating of more than 500 brake HP located at a major source of HAP emissions.

(4) A new or reconstructed 4SLB stationary RICE with a site rating of greater than or equal to 250 HP located at a major source of HAP emissions.

(5) This requirement does not apply if you own or operate an existing stationary RICE less than 100 HP, an existing stationary emergency RICE, or an existing stationary RICE that is not subject to any numerical emission standards.

(b) As specified in §63.9(b)(2), if you start up your stationary RICE with a site rating of more than 500 brake HP located at a major source of HAP emissions before the effective date of this subpart, you must submit an Initial Notification not later than December 13, 2004.

(c) If you start up your new or reconstructed stationary RICE with a site rating of more than 500 brake HP located at a major source of HAP emissions on or after August 16, 2004, you must submit an Initial Notification not later than 120 days after you become subject to this subpart.

(d) As specified in §63.9(b)(2), if you start up your stationary RICE with a site rating of equal to or less than 500 brake HP located at a major source of HAP emissions before the effective date of this subpart and you are required to submit an initial notification, you must submit an Initial Notification not later than July 16, 2008.

(e) If you start up your new or reconstructed stationary RICE with a site rating of equal to or less than 500 brake HP located at a major source of HAP emissions on or after March 18, 2008 and you are required to submit an initial notification, you must submit an Initial Notification not later than 120 days after you become subject to this subpart.

(f) If you are required to submit an Initial Notification but are otherwise not affected by the requirements of this subpart, in accordance with §63.6590(b), your notification should include the information in §63.9(b)(2)(i) through (v), and a statement that your stationary RICE has no additional requirements and explain the basis of the exclusion (for example, that it operates exclusively as an emergency stationary RICE if it has a site rating of more than 500 brake HP located at a major source of HAP emissions).

(g) If you are required to conduct a performance test, you must submit a Notification of Intent to conduct a performance test at least 60 days before the performance test is scheduled to begin as required in §63.7(b)(1).

(h) If you are required to conduct a performance test or other initial compliance demonstration as specified in Tables 4 and 5 to this subpart, you must submit a Notification of Compliance Status according to §63.9(h)(2)(ii).

(1) For each initial compliance demonstration required in Table 5 to this subpart that does not include a performance test, you must submit the Notification of Compliance Status before the close of business on the 30th day following the completion of the initial compliance demonstration.

(2) For each initial compliance demonstration required in Table 5 to this subpart that includes a performance test conducted according to the requirements in Table 3 to this subpart, you must submit the Notification of Compliance Status, including the performance test results, before the close of business on the 60th day following the completion of the performance test according to §63.10(d)(2).

[73 FR 3606, Jan. 18, 2008, as amended at 75 FR 9677, Mar. 3, 2010; 75 FR 51591, Aug. 20, 2010]

§ 63.6650 What reports must I submit and when?

(a) You must submit each report in Table 7 of this subpart that applies to you.

(b) Unless the Administrator has approved a different schedule for submission of reports under §63.10(a), you must submit each report by the date in Table 7 of this subpart and according to the requirements in paragraphs (b)(1) through (b)(9) of this section.

(1) For semiannual Compliance reports, the first Compliance report must cover the period beginning on the compliance date that is specified for your affected source in §63.6595 and ending on June 30 or December 31, whichever date is the first date following the end of the first calendar half after the compliance date that is specified for your source in §63.6595.

(2) For semiannual Compliance reports, the first Compliance report must be postmarked or delivered no later than July 31 or January 31, whichever date follows the end of the first calendar half after the compliance date that is specified for your affected source in §63.6595.

(3) For semiannual Compliance reports, each subsequent Compliance report must cover the semiannual reporting period from January 1 through June 30 or the semiannual reporting period from July 1 through December 31.

(4) For semiannual Compliance reports, each subsequent Compliance report must be postmarked or delivered no later than July 31 or January 31, whichever date is the first date following the end of the semiannual reporting period.

(5) For each stationary RICE that is subject to permitting regulations pursuant to 40 CFR part 70 or 71, and if the permitting authority has established dates for submitting semiannual reports pursuant to 40 CFR 70.6(a)(3)(iii)(A) or 40 CFR 71.6 (a)(3)(iii)(A), you may submit the first and subsequent Compliance reports according to the dates the permitting authority has established instead of according to the dates in paragraphs (b)(1) through (b)(4) of this section.

(6) For annual Compliance reports, the first Compliance report must cover the period beginning on the compliance date that is specified for your affected source in §63.6595 and ending on December 31.

(7) For annual Compliance reports, the first Compliance report must be postmarked or delivered no later than January 31 following the end of the first calendar year after the compliance date that is specified for your affected source in §63.6595.

(8) For annual Compliance reports, each subsequent Compliance report must cover the annual reporting period from January 1 through December 31.

(9) For annual Compliance reports, each subsequent Compliance report must be postmarked or delivered no later than January 31.

(c) The Compliance report must contain the information in paragraphs (c)(1) through (6) of this section.

(1) Company name and address.

(2) Statement by a responsible official, with that official's name, title, and signature, certifying the accuracy of the content of the report.

(3) Date of report and beginning and ending dates of the reporting period.

(4) If you had a malfunction during the reporting period, the compliance report must include the number, duration, and a brief description for each type of malfunction which occurred during the reporting period and which caused or may have caused any applicable emission limitation to be exceeded. The report must also include a description of actions taken by an owner or operator during a malfunction of an affected source to minimize emissions in accordance with §63.6605(b), including actions taken to correct a malfunction.

(5) If there are no deviations from any emission or operating limitations that apply to you, a statement that there were no deviations from the emission or operating limitations during the reporting period.

(6) If there were no periods during which the continuous monitoring system (CMS), including CEMS and CPMS, was out-of-control, as specified in §63.8(c)(7), a statement that there were no periods during which the CMS was out-of-control during the reporting period.

(d) For each deviation from an emission or operating limitation that occurs for a stationary RICE where you are not using a CMS to comply with the emission or operating limitations in this subpart, the Compliance report must contain the information

in paragraphs (c)(1) through (4) of this section and the information in paragraphs (d)(1) and (2) of this section.

(1) The total operating time of the stationary RICE at which the deviation occurred during the reporting period.

(2) Information on the number, duration, and cause of deviations (including unknown cause, if applicable), as applicable, and the corrective action taken.

(e) For each deviation from an emission or operating limitation occurring for a stationary RICE where you are using a CMS to comply with the emission and operating limitations in this subpart, you must include information in paragraphs (c)(1) through (4) and (e)(1) through (12) of this section.

(1) The date and time that each malfunction started and stopped.

(2) The date, time, and duration that each CMS was inoperative, except for zero (low-level) and high-level checks.

(3) The date, time, and duration that each CMS was out-of-control, including the information in §63.8(c)(8).

(4) The date and time that each deviation started and stopped, and whether each deviation occurred during a period of malfunction or during another period.

(5) A summary of the total duration of the deviation during the reporting period, and the total duration as a percent of the total source operating time during that reporting period.

(6) A breakdown of the total duration of the deviations during the reporting period into those that are due to control equipment problems, process problems, other known causes, and other unknown causes.

(7) A summary of the total duration of CMS downtime during the reporting period, and the total duration of CMS downtime as a percent of the total operating time of the stationary RICE at which the CMS downtime occurred during that reporting period.

(8) An identification of each parameter and pollutant (CO or formaldehyde) that was monitored at the stationary RICE.

(9) A brief description of the stationary RICE.

(10) A brief description of the CMS.

(11) The date of the latest CMS certification or audit.

(12) A description of any changes in CMS, processes, or controls since the last reporting period.

(f) Each affected source that has obtained a title V operating permit pursuant to 40 CFR part 70 or 71 must report all deviations as defined in this subpart in the semiannual monitoring report required by 40 CFR 70.6 (a)(3)(iii)(A) or 40 CFR 71.6(a)(3)(iii)(A). If an affected source submits a Compliance report pursuant to Table 7 of this subpart along with, or as part of, the semiannual monitoring report required by 40 CFR 70.6(a)(3)(iii)(A) or 40 CFR 71.6(a)(3)(iii)(A), and the Compliance report includes all required information concerning deviations from any emission or operating limitation in this subpart, submission of the Compliance report shall be deemed to satisfy any obligation to report the same deviations in the semiannual monitoring report. However, submission of a Compliance report shall not otherwise affect any obligation the affected source may have to report deviations from permit requirements to the permit authority.

(g) If you are operating as a new or reconstructed stationary RICE which fires landfill gas or digester gas equivalent to 10 percent or more of the gross heat input on an annual basis, you must submit an annual report according to Table 7 of this subpart by the date specified unless the Administrator has approved a different schedule, according to the information described in paragraphs (b)(1) through (b)(5) of this section. You must report the data specified in (g)(1) through (g)(3) of this section.

(1) Fuel flow rate of each fuel and the heating values that were used in your calculations. You must also demonstrate that the percentage of heat input provided by landfill gas or digester gas is equivalent to 10 percent or more of the total fuel consumption on an annual basis.

(2) The operating limits provided in your federally enforceable permit, and any deviations from these limits.

(3) Any problems or errors suspected with the meters.

[69 FR 33506, June 15, 2004, as amended at 75 FR 9677, Mar. 3, 2010]

§ 63.6655 What records must I keep?

(a) If you must comply with the emission and operating limitations, you must keep the records described in paragraphs (a)(1) through (a)(5), (b)(1) through (b)(3) and (c) of this section.

(1) A copy of each notification and report that you submitted to comply with this subpart, including all documentation supporting any Initial Notification or Notification of Compliance Status that you submitted, according to the requirement in §63.10(b)(2)(xiv).

(2) Records of the occurrence and duration of each malfunction of operation (*i.e.,*process equipment) or the air pollution control and monitoring equipment.

(3) Records of performance tests and performance evaluations as required in §63.10(b)(2)(viii).

(4) Records of all required maintenance performed on the air pollution control and monitoring equipment.

(5) Records of actions taken during periods of malfunction to minimize emissions in accordance with §63.6605(b), including corrective actions to restore malfunctioning process and air pollution control and monitoring equipment to its normal or usual manner of operation.

(b) For each CEMS or CPMS, you must keep the records listed in paragraphs (b)(1) through (3) of this section.

(1) Records described in §63.10(b)(2)(vi) through (xi).

(2) Previous (*i.e.,* superseded) versions of the performance evaluation plan as required in §63.8(d)(3).

(3) Requests for alternatives to the relative accuracy test for CEMS or CPMS as required in §63.8(f)(6)(i), if applicable.

(c) If you are operating a new or reconstructed stationary RICE which fires landfill gas or digester gas equivalent to 10 percent or more of the gross heat input on an annual basis, you must keep the records of your daily fuel usage monitors.

(d) You must keep the records required in Table 6 of this subpart to show continuous compliance with each emission or operating limitation that applies to you.

(e) You must keep records of the maintenance conducted on the stationary RICE in order to demonstrate that you operated and maintained the stationary RICE and after-treatment control device (if any) according to your own maintenance plan if you own or operate any of the following stationary RICE;

(1) An existing stationary RICE with a site rating of less than 100 brake HP located at a major source of HAP emissions.

(2) An existing stationary emergency RICE.

(3) An existing stationary RICE located at an area source of HAP emissions subject to management practices as shown in Table 2d to this subpart.

(f) If you own or operate any of the stationary RICE in paragraphs (f)(1) or (2) of this section, you must keep records of the hours of operation of the engine that is recorded through the non-resettable hour meter. The owner or operator must document how many hours are spent for emergency operation, including what classified the operation as emergency and how many hours are spent for non-emergency operation. If the engines are used for demand response operation, the owner or operator must keep records of the notification of the emergency situation, and the time the engine was operated as part of demand response.

(1) An existing emergency stationary RICE with a site rating of less than or equal to 500 brake HP located at a major source of HAP emissions that does not meet the standards applicable to non-emergency engines.

(2) An existing emergency stationary RICE located at an area source of HAP emissions that does not meet the standards applicable to non-emergency engines.

[69 FR 33506, June 15, 2004, as amended at 75 FR 9678, Mar. 3, 2010; 75 FR 51592, Aug. 20, 2010]

§ 63.6660 In what form and how long must I keep my records?

(a) Your records must be in a form suitable and readily available for expeditious review according to §63.10(b)(1).

(b) As specified in §63.10(b)(1), you must keep each record for 5 years following the date of each occurrence, measurement, maintenance, corrective action, report, or record.

(c) You must keep each record readily accessible in hard copy or electronic form for at least 5 years after the date of each occurrence, measurement, maintenance, corrective action, report, or record, according to §63.10(b)(1).

[69 FR 33506, June 15, 2004, as amended at 75 FR 9678, Mar. 3, 2010]

Other Requirements and Information

§ 63.6665 What parts of the General Provisions apply to me?

Table 8 to this subpart shows which parts of the General Provisions in §§63.1 through 63.15 apply to you. If you own or operate a new or reconstructed stationary RICE with a site rating of less than or equal to 500 brake HP located at a major source of HAP emissions (except new or reconstructed 4SLB engines greater than or equal to 250 and less than or equal to 500 brake HP), a new or reconstructed stationary RICE located at an area source of HAP emissions, or any of the following RICE with a site rating of more than 500 brake HP located at a major source of HAP emissions, you do not need to comply with any of the requirements of the General Provisions specified in Table 8: An existing 2SLB stationary RICE, an existing 4SLB stationary RICE, an existing stationary

RICE that combusts landfill or digester gas equivalent to 10 percent or more of the gross heat input on an annual basis, an existing emergency stationary RICE, or an existing limited use stationary RICE. If you own or operate any of the following RICE with a site rating of more than 500 brake HP located at a major source of HAP emissions, you do not need to comply with the requirements in the General Provisions specified in Table 8 except for the initial notification requirements: A new stationary RICE that combusts landfill gas or digester gas equivalent to 10 percent or more of the gross heat input on an annual basis, a new emergency stationary RICE, or a new limited use stationary RICE.

[75 FR 9678, Mar. 3, 2010]

§ 63.6670 Who implements and enforces this subpart?

(a) This subpart is implemented and enforced by the U.S. EPA, or a delegated authority such as your State, local, or tribal agency. If the U.S. EPA Administrator has delegated authority to your State, local, or tribal agency, then that agency (as well as the U.S. EPA) has the authority to implement and enforce this subpart. You should contact your U.S. EPA Regional Office to find out whether this subpart is delegated to your State, local, or tribal agency.

(b) In delegating implementation and enforcement authority of this subpart to a State, local, or tribal agency under 40 CFR part 63, subpart E, the authorities contained in paragraph (c) of this section are retained by the Administrator of the U.S. EPA and are not transferred to the State, local, or tribal agency.

(c) The authorities that will not be delegated to State, local, or tribal agencies are:

(1) Approval of alternatives to the non-opacity emission limitations and operating limitations in §63.6600 under §63.6(g).

(2) Approval of major alternatives to test methods under §63.7(e)(2)(ii) and (f) and as defined in §63.90.

(3) Approval of major alternatives to monitoring under §63.8(f) and as defined in §63.90.

(4) Approval of major alternatives to recordkeeping and reporting under §63.10(f) and as defined in §63.90.

(5) Approval of a performance test which was conducted prior to the effective date of the rule, as specified in §63.6610(b).

§ 63.6675 What definitions apply to this subpart?

Terms used in this subpart are defined in the Clean Air Act (CAA); in 40 CFR 63.2, the General Provisions of this part; and in this section as follows:

Area source means any stationary source of HAP that is not a major source as defined in part 63.

Associated equipment as used in this subpart and as referred to in section 112(n)(4) of the CAA, means equipment associated with an oil or natural gas exploration or production well, and includes all equipment from the well bore to the point of custody transfer, except glycol dehydration units, storage vessels with potential for flash emissions, combustion turbines, and stationary RICE.

Black start engine means an engine whose only purpose is to start up a combustion turbine.

CAA means the Clean Air Act (42 U.S.C. 7401 *et seq.,* as amended by Public Law 101–549, 104 Stat. 2399).

Commercial emergency stationary RICE means an emergency stationary RICE used in commercial establishments such as office buildings, hotels, stores, telecommunications facilities, restaurants, financial institutions such as banks, doctor's offices, and sports and performing arts facilities.

Compression ignition means relating to a type of stationary internal combustion engine that is not a spark ignition engine.

Custody transfer means the transfer of hydrocarbon liquids or natural gas: After processing and/or treatment in the producing operations, or from storage vessels or automatic transfer facilities or other such equipment, including product loading racks, to pipelines or any other forms of transportation. For the purposes of this subpart, the point at which such liquids or natural gas enters a natural gas processing plant is a point of custody transfer.

Deviation means any instance in which an affected source subject to this subpart, or an owner or operator of such a source:

(1) Fails to meet any requirement or obligation established by this subpart, including but not limited to any emission limitation or operating limitation;

(2) Fails to meet any term or condition that is adopted to implement an applicable requirement in this subpart and that is included in the operating permit for any affected source required to obtain such a permit; or

(3) Fails to meet any emission limitation or operating limitation in this subpart during malfunction, regardless or whether or not such failure is permitted by this subpart.

(4) Fails to satisfy the general duty to minimize emissions established by §63.6(e)(1)(i).

Diesel engine means any stationary RICE in which a high boiling point liquid fuel injected into the combustion chamber ignites when the air charge has been compressed to a temperature sufficiently high for auto-ignition. This process is also known as compression ignition.

Diesel fuel means any liquid obtained from the distillation of petroleum with a boiling point of approximately 150 to 360 degrees Celsius. One commonly used form is fuel oil number 2. Diesel fuel also includes any non-distillate fuel with comparable physical and chemical properties (*e.g.* biodiesel) that is suitable for use in compression ignition engines.

Digester gas means any gaseous by-product of wastewater treatment typically formed through the anaerobic decomposition of organic waste materials and composed principally of methane and CO_2.

Dual-fuel engine means any stationary RICE in which a liquid fuel (typically diesel fuel) is used for compression ignition and gaseous fuel (typically natural gas) is used as the primary fuel.

Emergency stationary RICE means any stationary internal combustion engine whose operation is limited to emergency situations and required testing and maintenance. Examples include stationary RICE used to produce power for critical networks or equipment (including power supplied to portions of a facility) when electric power from the local utility (or the normal power source, if the facility runs on its own power production) is interrupted, or stationary RICE used to pump water in the case of fire or flood, *etc.* Stationary RICE used for peak shaving are not considered emergency stationary RICE. Stationary RICE used to supply power to an electric grid or that supply non-emergency power as part of a financial arrangement with another entity are not considered to be emergency engines, except as permitted under §63.6640(f). All emergency stationary RICE must comply with the requirements specified in §63.6640(f) in order to be considered emergency stationary RICE. If the engine does not comply with the requirements specified in §63.6640(f), then it is not considered to be an emergency stationary RICE under this subpart.

Engine startup means the time from initial start until applied load and engine and associated equipment reaches steady state or normal operation. For stationary engine with catalytic controls, engine startup means the time from initial start until applied load and engine and associated equipment, including the catalyst, reaches steady state or normal operation.

Four-stroke engine means any type of engine which completes the power cycle in two crankshaft revolutions, with intake and compression strokes in the first revolution and power and exhaust strokes in the second revolution.

Gaseous fuel means a material used for combustion which is in the gaseous state at standard atmospheric temperature and pressure conditions.

Gasoline means any fuel sold in any State for use in motor vehicles and motor vehicle engines, or nonroad or stationary engines, and commonly or commercially known or sold as gasoline.

Glycol dehydration unit means a device in which a liquid glycol (including, but not limited to, ethylene glycol, diethylene glycol, or triethylene glycol) absorbent directly contacts a natural gas stream and absorbs water in a contact tower or absorption column (absorber). The glycol contacts and absorbs water vapor and other gas stream constituents from the natural gas and becomes "rich" glycol. This glycol is then regenerated in the glycol dehydration unit reboiler. The "lean" glycol is then recycled.

Hazardous air pollutants (HAP) means any air pollutants listed in or pursuant to section 112(b) of the CAA.

Institutional emergency stationary RICE means an emergency stationary RICE used in institutional establishments such as medical centers, nursing homes, research centers, institutions of higher education, correctional facilities, elementary and secondary schools, libraries, religious establishments, police stations, and fire stations.

ISO standard day conditions means 288 degrees Kelvin (15 degrees Celsius), 60 percent relative humidity and 101.3 kilopascals pressure.

Landfill gas means a gaseous by-product of the land application of municipal refuse typically formed through the anaerobic decomposition of waste materials and composed principally of methane and CO_2.

Lean burn engine means any two-stroke or four-stroke spark ignited engine that does not meet the definition of a rich burn engine.

Limited use stationary RICE means any stationary RICE that operates less than 100 hours per year.

Liquefied petroleum gas means any liquefied hydrocarbon gas obtained as a by-product in petroleum refining of natural gas production.

Liquid fuel means any fuel in liquid form at standard temperature and pressure, including but not limited to diesel, residual/crude oil, kerosene/naphtha (jet fuel), and gasoline.

Major Source, as used in this subpart, shall have the same meaning as in §63.2, except that:

(1) Emissions from any oil or gas exploration or production well (with its associated equipment (as defined in this section)) and emissions from any pipeline compressor station or pump station shall not be aggregated with emissions from other similar units, to determine whether such emission points or stations are major sources, even when emission points are in a contiguous area or under common control;

(2) For oil and gas production facilities, emissions from processes, operations, or equipment that are not part of the same oil and gas production facility, as defined in §63.1271 of subpart HHH of this part, shall not be aggregated;

(3) For production field facilities, only HAP emissions from glycol dehydration units, storage vessel with the potential for flash emissions, combustion turbines and reciprocating internal combustion engines shall be aggregated for a major source determination; and

(4) Emissions from processes, operations, and equipment that are not part of the same natural gas transmission and storage facility, as defined in §63.1271 of subpart HHH of this part, shall not be aggregated.

Malfunction means any sudden, infrequent, and not reasonably preventable failure of air pollution control equipment, process equipment, or a process to operate in a normal or usual manner which causes, or has the potential to cause, the emission limitations in an applicable standard to be exceeded. Failures that are caused in part by poor maintenance or careless operation are not malfunctions.

Natural gas means a naturally occurring mixture of hydrocarbon and non-hydrocarbon gases found in geologic formations beneath the Earth's surface, of which the principal constituent is methane. Natural gas may be field or pipeline quality.

Non-selective catalytic reduction (NSCR) means an add-on catalytic nitrogen oxides (NO_X) control device for rich burn engines that, in a two-step reaction, promotes the conversion of excess oxygen, NO_X, CO, and volatile organic compounds (VOC) into CO_2, nitrogen, and water.

Oil and gas production facility as used in this subpart means any grouping of equipment where hydrocarbon liquids are processed, upgraded (*i.e.,* remove impurities or other constituents to meet contract specifications), or stored prior to the point of custody transfer; or where natural gas is processed, upgraded, or stored prior to entering the natural gas transmission and storage source category. For purposes of a major source determination, facility (including a building, structure, or installation) means oil and natural gas production and processing equipment that is located within the boundaries of an individual surface site as defined in this section. Equipment that is part of a facility will typically be located within close proximity to other equipment located at the same facility. Pieces of production equipment or groupings of equipment located on different oil and gas leases, mineral fee tracts, lease tracts, subsurface or surface unit areas, surface

fee tracts, surface lease tracts, or separate surface sites, whether or not connected by a road, waterway, power line or pipeline, shall not be considered part of the same facility. Examples of facilities in the oil and natural gas production source category include, but are not limited to, well sites, satellite tank batteries, central tank batteries, a compressor station that transports natural gas to a natural gas processing plant, and natural gas processing plants.

Oxidation catalyst means an add-on catalytic control device that controls CO and VOC by oxidation.

Peaking unit or engine means any standby engine intended for use during periods of high demand that are not emergencies.

Percent load means the fractional power of an engine compared to its maximum manufacturer's design capacity at engine site conditions. Percent load may range between 0 percent to above 100 percent.

Potential to emit means the maximum capacity of a stationary source to emit a pollutant under its physical and operational design. Any physical or operational limitation on the capacity of the stationary source to emit a pollutant, including air pollution control equipment and restrictions on hours of operation or on the type or amount of material combusted, stored, or processed, shall be treated as part of its design if the limitation or the effect it would have on emissions is federally enforceable. For oil and natural gas production facilities subject to subpart HH of this part, the potential to emit provisions in §63.760(a) may be used. For natural gas transmission and storage facilities subject to subpart HHH of this part, the maximum annual facility gas throughput for storage facilities may be determined according to §63.1270(a)(1) and the maximum annual throughput for transmission facilities may be determined according to §63.1270(a)(2).

Production field facility means those oil and gas production facilities located prior to the point of custody transfer.

Production well means any hole drilled in the earth from which crude oil, condensate, or field natural gas is extracted.

Propane means a colorless gas derived from petroleum and natural gas, with the molecular structure C_3H_8.

Residential emergency stationary RICE means an emergency stationary RICE used in residential establishments such as homes or apartment buildings.

Responsible official means responsible official as defined in 40 CFR 70.2.

Rich burn engine means any four-stroke spark ignited engine where the manufacturer's recommended operating air/fuel ratio divided by the stoichiometric air/fuel ratio at full

load conditions is less than or equal to 1.1. Engines originally manufactured as rich burn engines, but modified prior to December 19, 2002 with passive emission control technology for NO_X(such as pre-combustion chambers) will be considered lean burn engines. Also, existing engines where there are no manufacturer's recommendations regarding air/fuel ratio will be considered a rich burn engine if the excess oxygen content of the exhaust at full load conditions is less than or equal to 2 percent.

Site-rated HP means the maximum manufacturer's design capacity at engine site conditions.

Spark ignition means relating to either: A gasoline-fueled engine; or any other type of engine with a spark plug (or other sparking device) and with operating characteristics significantly similar to the theoretical Otto combustion cycle. Spark ignition engines usually use a throttle to regulate intake air flow to control power during normal operation. Dual-fuel engines in which a liquid fuel (typically diesel fuel) is used for CI and gaseous fuel (typically natural gas) is used as the primary fuel at an annual average ratio of less than 2 parts diesel fuel to 100 parts total fuel on an energy equivalent basis are spark ignition engines.

Stationary reciprocating internal combustion engine (RICE) means any reciprocating internal combustion engine which uses reciprocating motion to convert heat energy into mechanical work and which is not mobile. Stationary RICE differ from mobile RICE in that a stationary RICE is not a non-road engine as defined at 40 CFR 1068.30, and is not used to propel a motor vehicle or a vehicle used solely for competition.

Stationary RICE test cell/stand means an engine test cell/stand, as defined in subpart PPPPP of this part, that tests stationary RICE.

Stoichiometric means the theoretical air-to-fuel ratio required for complete combustion.

Storage vessel with the potential for flash emissions means any storage vessel that contains a hydrocarbon liquid with a stock tank gas-to-oil ratio equal to or greater than 0.31 cubic meters per liter and an American Petroleum Institute gravity equal to or greater than 40 degrees and an actual annual average hydrocarbon liquid throughput equal to or greater than 79,500 liters per day. Flash emissions occur when dissolved hydrocarbons in the fluid evolve from solution when the fluid pressure is reduced.

Subpart means 40 CFR part 63, subpart ZZZZ.

Surface site means any combination of one or more graded pad sites, gravel pad sites, foundations, platforms, or the immediate physical location upon which equipment is physically affixed.

Two-stroke engine means a type of engine which completes the power cycle in single crankshaft revolution by combining the intake and compression operations into one

stroke and the power and exhaust operations into a second stroke. This system requires auxiliary scavenging and inherently runs lean of stoichiometric.

[69 FR 33506, June 15, 2004, as amended at 71 FR 20467, Apr. 20, 2006; 73 FR 3607, Jan. 18, 2008; 75 FR 9679, Mar. 3, 2010; 75 FR 51592, Aug. 20, 2010; 76 FR 12867, Mar. 9, 2011]

Table 1ato Subpart ZZZZ of Part 63—Emission Limitations for Existing, New, and Reconstructed Spark Ignition, 4SRB Stationary RICE >500 HP Located at a Major Source of HAP Emissions

As stated in §§63.6600 and 63.6640, you must comply with the following emission limitations at 100 percent load plus or minus 10 percent for existing, new and reconstructed 4SRB stationary RICE >500 HP located at a major source of HAP emissions:

For each . . .	You must meet the following emission limitation, except during periods of startup . . .	During periods of startup you must . . .
1. 4SRB stationary RICE	a. Reduce formaldehyde emissions by 76 percent or more. If you commenced construction or reconstruction between December 19, 2002 and June 15, 2004, you may reduce formaldehyde emissions by 75 percent or more until June 15, 2007 or	Minimize the engine's time spent at idle and minimize the engine's startup time at startup to a period needed for appropriate and safe loading of the engine, not to exceed 30 minutes, after which time the non-startup emission limitations apply.[1]
	b. Limit the concentration of formaldehyde in the stationary RICE exhaust to 350 ppbvd or less at 15 percent O_2	

[1]Sources can petition the Administrator pursuant to the requirements of 40 CFR 63.6(g) for alternative work practices.

[75 FR 9679, Mar. 3, 2010, as amended at 75 FR 51592, Aug. 20, 2010]

Table 1bto Subpart ZZZZ of Part 63—Operating Limitations for Existing, New, and Reconstructed Spark Ignition 4SRB Stationary RICE >500 HP Located at a Major Source of HAP Emissions and Existing Spark Ignition 4SRB Stationary RICE >500 HP Located at an Area Source of HAP Emissions

As stated in §§63.6600, 63.6603, 63.6630 and 63.6640, you must comply with the following operating limitations for existing, new and reconstructed 4SRB stationary RICE >500 HP located at a major source of HAP emissions and existing 4SRB stationary RICE >500 HP located at an area source of HAP emissions that operate more than 24 hours per calendar year:

For each . . .	You must meet the following operating limitation . . .
1. 4SRB stationary RICE complying with the requirement to reduce formaldehyde emissions by 76 percent or more (or by 75 percent or more, if	a. Maintain your catalyst so that the pressure drop across the catalyst does not change by more than 2 inches of water at 100 percent load plus or minus 10 percent from the pressure drop

applicable) and using NSCR; or 4SRB stationary RICE complying with the requirement to limit the concentration of formaldehyde in the stationary RICE exhaust to 350 ppbvd or less at 15 percent O2 and using NSCR; or 4SRB stationary RICE complying with the requirement to limit the concentration of formaldehyde in the stationary RICE exhaust to 2.7 ppmvd or less at 15 percent O2 and using NSCR.	across the catalyst measured during the initial performance test; and b. Maintain the temperature of your stationary RICE exhaust so that the catalyst inlet temperature is greater than or equal to 750 °F and less than or equal to 1250 °F.
2. 4SRB stationary RICE complying with the requirement to reduce formaldehyde emissions by 76 percent or more (or by 75 percent or more, if applicable) and not using NSCR; or 4SRB stationary RICE complying with the requirement to limit the concentration of formaldehyde in the stationary RICE exhaust to 350 ppbvd or less at 15 percent O2 and not using NSCR; or 4SRB stationary RICE complying with the requirement to limit the concentration of formaldehyde in the stationary RICE exhaust to 2.7 ppmvd or less at 15 percent O2 and not using NSCR.	Comply with any operating limitations approved by the Administrator.

[76 FR 12867, Mar. 9, 2011]

Table 2ato Subpart ZZZZ of Part 63—Emission Limitations for New and Reconstructed 2SLB and Compression Ignition Stationary RICE >500 HP and New and Reconstructed 4SLB Stationary RICE ≥250 HP Located at a Major Source of HAP Emissions

As stated in §§63.6600 and 63.6640, you must comply with the following emission limitations for new and reconstructed lean burn and new and reconstructed compression ignition stationary RICE at 100 percent load plus or minus 10 percent:

For each . . .	You must meet the following emission limitation, except during periods of startup . . .	During periods of startup you must . . .
1. 2SLB stationary RICE	a. Reduce CO emissions by 58 percent or more; or b. Limit concentration of formaldehyde in the stationary RICE exhaust to 12 ppmvd or less at 15 percent O_2. If you commenced construction or reconstruction between December 19, 2002 and June 15, 2004, you may limit concentration of formaldehyde to 17 ppmvd or less at 15 percent O_2until June 15, 2007	Minimize the engine's time spent at idle and minimize the engine's startup time at startup to a period needed for appropriate and safe loading of the engine, not to exceed 30 minutes, after which time the non-startup emission limitations apply.[1]
2. 4SLB stationary RICE	a. Reduce CO emissions by 93 percent or more; or	
	b. Limit concentration of formaldehyde in the stationary RICE exhaust to 14 ppmvd or less at 15 percent O_2	
3. CI stationary RICE	a. Reduce CO emissions by 70 percent or more; or	

	b. Limit concentration of formaldehyde in the stationary RICE exhaust to 580 ppbvd or less at 15 percent O_2	

[1]Sources can petition the Administrator pursuant to the requirements of 40 CFR 63.6(g) for alternative work practices.

[75 FR 9680, Mar. 3, 2010]

Table 2bto Subpart ZZZZ of Part 63— Operating Limitations for New and Reconstructed 2SLB and Compression Ignition Stationary RICE >500 HP Located at a Major Source of HAP Emissions, New and Reconstructed 4SLB Stationary RICE ≥250 HP Located at a Major Source of HAP Emissions, Existing Compression Ignition Stationary RICE >500 HP, and Existing 4SLB Stationary RICE >500 HP Located at an Area Source of HAP Emissions

As stated in §§63.6600, 63.6601, 63.6603, 63.6630, and 63.6640, you must comply with the following operating limitations for new and reconstructed 2SLB and compression ignition stationary RICE located at a major source of HAP emissions; new and reconstructed 4SLB stationary RICE ≥250 HP located at a major source of HAP emissions; existing compression ignition stationary RICE >500 HP; and existing 4SLB stationary RICE >500 HP located at an area source of HAP emissions that operate more than 24 hours per calendar year:

For each . . .	You must meet the following operating limitation . . .
1. 2SLB and 4SLB stationary RICE and CI stationary RICE complying with the requirement to reduce CO emissions and using an oxidation catalyst; or 2SLB and 4SLB stationary RICE and CI stationary RICE complying with the requirement to limit the concentration of formaldehyde in the stationary RICE exhaust and using an oxidation catalyst; or 4SLB stationary RICE and CI stationary RICE complying with the requirement to limit the concentration of CO in the stationary RICE exhaust and using an oxidation catalyst	a. maintain your catalyst so that the pressure drop across the catalyst does not change by more than 2 inches of water at 100 percent load plus or minus 10 percent from the pressure drop across the catalyst that was measured during the initial performance test; and b. maintain the temperature of your stationary RICE exhaust so that the catalyst inlet temperature is greater than or equal to 450 °F and less than or equal to 1350 °F.[1]
2. 2SLB and 4SLB stationary RICE and CI stationary RICE complying with the requirement to reduce CO emissions and not using an oxidation catalyst; or 2SLB and 4SLB stationary RICE and CI stationary RICE complying with the requirement to limit the concentration of formaldehyde in the stationary RICE exhaust and not using an oxidation catalyst; or 4SLB stationary RICE and CI stationary RICE complying with the requirement to limit the concentration of CO in the stationary RICE exhaust and not using an oxidation catalyst	Comply with any operating limitations approved by the Administrator.

[1]Sources can petition the Administrator pursuant to the requirements of 40 CFR 63.8(g) for a different temperature range.

[75 FR 51593, Aug. 20, 2010, as amended at 76 FR 12867, Mar. 9, 2011]

Table 2cto Subpart ZZZZ of Part 63—Requirements for Existing Compression Ignition Stationary RICE Located at a Major Source of HAP Emissions and Existing Spark Ignition Stationary RICE ≤500 HP Located at a Major Source of HAP Emissions

As stated in §§63.6600, 63.6602, and 63.6640, you must comply with the following requirements for existing compression ignition stationary RICE located at a major source of HAP emissions and existing spark ignition stationary RICE ≤500 HP located at a major source of HAP emissions:

For each . . .	You must meet the following requirement, except during periods of startup . . .	During periods of startup you must . . .
1. Emergency stationary CI RICE and black start stationary CI RICE.[1]	a. Change oil and filter every 500 hours of operation or annually, whichever comes first;[2] b. Inspect air cleaner every 1,000 hours of operation or annually, whichever comes first; c. Inspect all hoses and belts every 500 hours of operation or annually, whichever comes first, and replace as necessary.[3]	Minimize the engine's time spent at idle and minimize the engine's startup time at startup to a period needed for appropriate and safe loading of the engine, not to exceed 30 minutes, after which time the non-startup emission limitations apply.[3]
2. Non-Emergency, non-black start stationary CI RICE <100 HP	a. Change oil and filter every 1,000 hours of operation or annually, whichever comes first;[2]	
	b. Inspect air cleaner every 1,000 hours of operation or annually, whichever comes first;	
	c. Inspect all hoses and belts every 500 hours of operation or annually, whichever comes first, and replace as necessary.[3]	
3. Non-Emergency, non-black start CI stationary RICE 100≤HP≤300 HP	Limit concentration of CO in the stationary RICE exhaust to 230 ppmvd or less at 15 percent O_2	
4. Non-Emergency, non-black start CI stationary RICE 300<HP≤500	a. Limit concentration of CO in the stationary RICE exhaust to 49 ppmvd or less at 15 percent O_2; or	
	b. Reduce CO emissions by 70 percent or more.	
5. Non-Emergency, non-black start stationary CI RICE >500 HP	a. Limit concentration of CO in the stationary RICE exhaust to 23 ppmvd or less at 15 percent O_2; or	
	b. Reduce CO emissions by 70 percent or more.	
6. Emergency stationary SI RICE and black start stationary SI RICE.[1]	a. Change oil and filter every 500 hours of operation or annually, whichever comes first;[2]	
	b. Inspect spark plugs every 1,000	

	hours of operation or annually, whichever comes first;	
	c. Inspect all hoses and belts every 500 hours of operation or annually, whichever comes first, and replace as necessary.[3]	
7. Non-Emergency, non-black start stationary SI RICE <100 HP that are not 2SLB stationary RICE	a. Change oil and filter every 1,440 hours of operation or annually, whichever comes first;[2]	
	b. Inspect spark plugs every 1,440 hours of operation or annually, whichever comes first;	
	c. Inspect all hoses and belts every 1,440 hours of operation or annually, whichever comes first, and replace as necessary.[3]	
8. Non-Emergency, non-black start 2SLB stationary SI RICE <100 HP	a. Change oil and filter every 4,320 hours of operation or annually, whichever comes first;[2]	
	b. Inspect spark plugs every 4,320 hours of operation or annually, whichever comes first;	
	c. Inspect all hoses and belts every 4,320 hours of operation or annually, whichever comes first, and replace as necessary.[3]	
9. Non-emergency, non-black start 2SLB stationary RICE 100≤HP≤500	Limit concentration of CO in the stationary RICE exhaust to 225 ppmvd or less at 15 percent O_2	
10. Non-emergency, non-black start 4SLB stationary RICE 100≤HP≤500	Limit concentration of CO in the stationary RICE exhaust to 47 ppmvd or less at 15 percent O_2	
11. Non-emergency, non-black start 4SRB stationary RICE 100≤HP≤500	Limit concentration of formaldehyde in the stationary RICE exhaust to 10.3 ppmvd or less at 15 percent O_2	
12. Non-emergency, non-black start landfill or digester gas-fired stationary RICE 100≤HP≤500	Limit concentration of CO in the stationary RICE exhaust to 177 ppmvd or less at 15 percent O_2	

[1]If an emergency engine is operating during an emergency and it is not possible to shut down the engine in order to perform the work practice requirements on the schedule required in Table 2c of this subpart, or if performing the work practice on the required schedule would otherwise pose an unacceptable risk under Federal, State, or local law, the work practice can be delayed until the emergency is over or the unacceptable risk under Federal, State, or local law has abated. The work practice should be performed as soon as practicable after the emergency has ended or the unacceptable risk under Federal,

State, or local law has abated. Sources must report any failure to perform the work practice on the schedule required and the Federal, State or local law under which the risk was deemed unacceptable.

[2]Sources have the option to utilize an oil analysis program as described in §63.6625(i) in order to extend the specified oil change requirement in Table 2c of this subpart.

[3]Sources can petition the Administrator pursuant to the requirements of 40 CFR 63.6(g) for alternative work practices.

[75 FR 51593, Aug. 20, 2010]

Table 2dto Subpart ZZZZ of Part 63— Requirements for Existing Stationary RICE Located at Area Sources of HAP Emissions

As stated in §§63.6603 and 63.6640, you must comply with the following requirements for existing stationary RICE located at area sources of HAP emissions:

For each . . .	You must meet the following requirement, except during periods of startup . . .	During periods of startup you must . . .
1. Non-Emergency, non-black start CI stationary RICE ≤300 HP	a. Change oil and filter every 1,000 hours of operation or annually, whichever comes first;[1]	Minimize the engine's time spent at idle and minimize the engine's startup time at startup to a period needed for appropriate and safe loading of the engine, not to exceed 30 minutes, after which time the non-startup emission limitations apply.
	b. Inspect air cleaner every 1,000 hours of operation or annually, whichever comes first; c. Inspect all hoses and belts every 500 hours of operation or annually, whichever comes first, and replace as necessary.	
2. Non-Emergency, non-black start CI stationary RICE 300<HP≤500	a. Limit concentration of CO in the stationary RICE exhaust to 49 ppmvd at 15 percent O_2; or	
	b. Reduce CO emissions by 70 percent or more.	
3. Non-Emergency, non-black start CI stationary RICE >500 HP	a. Limit concentration of CO in the stationary RICE exhaust to 23 ppmvd at 15 percent O_2; or	
	b. Reduce CO emissions by 70 percent or more.	

4. Emergency stationary CI RICE and black start stationary CI RICE.[2]	a. Change oil and filter every 500 hours of operation or annually, whichever comes first;[1]	
	b. Inspect air cleaner every 1,000 hours of operation or annually, whichever comes first; and	
	c. Inspect all hoses and belts every 500 hours of operation or annually, whichever comes first, and replace as necessary.	
5. Emergency stationary SI RICE; black start stationary SI RICE; non-emergency, non-black start 4SLB stationary RICE >500 HP that operate 24 hours or less per calendar year; non-emergency, non-black start 4SRB stationary RICE >500 HP that operate 24 hours or less per calendar year.[2]	a. Change oil and filter every 500 hours of operation or annually, whichever comes first;[1] b. Inspect spark plugs every 1,000 hours of operation or annually, whichever comes first; and c. Inspect all hoses and belts every 500 hours of operation or annually, whichever comes first, and replace as necessary.	
6. Non-emergency, non-black start 2SLB stationary RICE	a. Change oil and filter every 4,320 hours of operation or annually, whichever comes first;[1]	
	b. Inspect spark plugs every 4,320 hours of operation or annually, whichever comes first; and	
	c. Inspect all hoses and belts every 4,320 hours of operation or annually, whichever comes first, and replace as necessary.	
7. Non-emergency, non-black start 4SLB stationary RICE ≤500 HP	a. Change oil and filter every 1,440 hours of operation or annually, whichever comes first;[1]	
	b. Inspect spark plugs every 1,440 hours of operation or annually, whichever comes first; and	
	c. Inspect all hoses and belts every 1,440 hours of operation or annually, whichever comes first, and replace as necessary.	

8. Non-emergency, non-black start 4SLB stationary RICE >500 HP	a. Limit concentration of CO in the stationary RICE exhaust to 47 ppmvd at 15 percent O_2; or	
	b. Reduce CO emissions by 93 percent or more.	
9. Non-emergency, non-black start 4SRB stationary RICE ≤500 HP	a. Change oil and filter every 1,440 hours of operation or annually, whichever comes first;[1]	
	b. Inspect spark plugs every 1,440 hours of operation or annually, whichever comes first; and	
	c. Inspect all hoses and belts every 1,440 hours of operation or annually, whichever comes first, and replace as necessary.	
10. Non-emergency, non-black start 4SRB stationary RICE >500 HP	a. Limit concentration of formaldehyde in the stationary RICE exhaust to 2.7 ppmvd at 15 percent O_2; or	
	b. Reduce formaldehyde emissions by 76 percent or more.	
11. Non-emergency, non-black start landfill or digester gas-fired stationary RICE	a. Change oil and filter every 1,440 hours of operation or annually, whichever comes first;[1]	
	b. Inspect spark plugs every 1,440 hours of operation or annually, whichever comes first; and	
	c. Inspect all hoses and belts every 1,440 hours of operation or annually, whichever comes first, and replace as necessary.	

[1]Sources have the option to utilize an oil analysis program as described in §63.6625(i) in order to extend the specified oil change requirement in Table 2d of this subpart.

[2]If an emergency engine is operating during an emergency and it is not possible to shut down the engine in order to perform the management practice requirements on the schedule required in Table 2d of this subpart, or if performing the management practice on the required schedule would otherwise pose an unacceptable risk under Federal, State, or local law, the management practice can be delayed until the emergency is over or the unacceptable risk under Federal, State, or local law has abated. The management practice

should be performed as soon as practicable after the emergency has ended or the unacceptable risk under Federal, State, or local law has abated. Sources must report any failure to perform the management practice on the schedule required and the Federal, State or local law under which the risk was deemed unacceptable.

[75 FR 51595, Aug. 20, 2010]

Table 3 to Subpart ZZZZ of Part 63—Subsequent Performance Tests

As stated in §§63.6615 and 63.6620, you must comply with the following subsequent performance test requirements:

For each . . .	Complying with the requirement to . . .	You must . . .
1. New or reconstructed 2SLB stationary RICE with a brake horsepower >500 located at major sources; new or reconstructed 4SLB stationary RICE with a brake horsepower ≥250 located at major sources; and new or reconstructed CI stationary RICE with a brake horsepower >500 located at major sources	Reduce CO emissions and not using a CEMS	Conduct subsequent performance tests semiannually.[1]
2. 4SRB stationary RICE with a brake horsepower ≥5,000 located at major sources	Reduce formaldehyde emissions	Conduct subsequent performance tests semiannually.[1]
3. Stationary RICE with a brake horsepower >500 located at major sources and new or reconstructed 4SLB stationary RICE with a brake horsepower 250≤HP≤500 located at major sources	Limit the concentration of formaldehyde in the stationary RICE exhaust	Conduct subsequent performance tests semiannually.[1]
4. Existing non-emergency, non-black start CI stationary RICE with a brake horsepower >500 that are not limited use stationary RICE; existing non-emergency, non-black start 4SLB and 4SRB stationary RICE located at an area source of HAP emissions with a brake horsepower >500 that are operated more than 24 hours per calendar year that are not limited use stationary RICE	Limit or reduce CO or formaldehyde emissions	Conduct subsequent performance tests every 8,760 hrs. or 3 years, whichever comes first.
5. Existing non-emergency, non-black start CI stationary RICE with a brake horsepower >500 that are limited use stationary RICE; existing non-emergency, non-black start 4SLB and 4SRB stationary RICE located at an area source of HAP emissions with a brake horsepower >500 that are operated more than 24 hours per calendar year and are limited use stationary RICE	Limit or reduce CO or formaldehyde emissions	Conduct subsequent performance tests every 8,760 hrs. or 5 years, whichever comes first.

[1]After you have demonstrated compliance for two consecutive tests, you may reduce the frequency of subsequent performance tests to annually. If the results of any subsequent annual performance test indicate the stationary RICE is not in compliance with the CO or formaldehyde emission limitation, or you deviate from any of your operating limitations, you must resume semiannual performance tests.

[75 FR 51596, Aug. 20, 2010]

Table 4 to Subpart ZZZZ of Part 63—Requirements for Performance Tests

As stated in §§63.6610, 63.6611, 63.6612, 63.6620, and 63.6640, you must comply with the following requirements for performance tests for stationary RICE:

For each . . .	Complying with the requirement to . . .	You must . . .	Using . . .	According to the following requirements . . .
1. 2SLB, 4SLB, and CI stationary RICE	a. Reduce CO emissions	i. Measure the O_2at the inlet and outlet of the control device; and	(1) Portable CO and O_2analyzer	(a) Using ASTM D6522–00 (2005)[a](incorporated by reference, see §63.14). Measurements to determine O_2must be made at the same time as the measurements for CO concentration.
		ii. Measure the CO at the inlet and the outlet of the control device	(1) Portable CO and O_2analyzer	(a) Using ASTM D6522–00 (2005)[ab](incorporated by reference, see §63.14) or Method 10 of 40 CFR appendix A. The CO concentration must be at 15 percent O_2, dry basis.
2. 4SRB stationary RICE	a. Reduce formaldehyde emissions	i. Select the sampling port location and the number of traverse points; and	(1) Method 1 or 1A of 40 CFR part 60, appendix A §63.7(d)(1)(i)	(a) Sampling sites must be located at the inlet and outlet of the control device.
		ii. Measure O_2at the inlet and outlet of the control device; and	(1) Method 3 or 3A or 3B of 40 CFR part 60, appendix A, or ASTM Method D6522–00m (2005)	(a) Measurements to determine O_2concentration must be made at the same time as the measurements for formaldehyde concentration.
		iii. Measure moisture content at the inlet and outlet of the control device; and	(1) Method 4 of 40 CFR part 60, appendix A, or Test Method 320 of 40 CFR part 63, appendix A, or ASTM D 6348–03	(a) Measurements to determine moisture content must be made at the same time and location as the measurements for formaldehyde concentration.
		iv. Measure formaldehyde at the inlet and the outlet of the control device	(1) Method 320 or 323 of 40 CFR part 63, appendix A; or ASTM D6348–03,[c]provided in ASTM D6348–03 Annex A5 (Analyte Spiking Technique), the percent R must be greater than or equal to 70 and less than or equal to 130	(a) Formaldehyde concentration must be at 15 percent O_2, dry basis. Results of this test consist of the average of the three 1-hour or longer runs.
3. Stationary RICE	a. Limit the concentration of formaldehyde or CO in the stationary RICE exhaust	i. Select the sampling port location and the number of traverse points; and	(1) Method 1 or 1A of 40 CFR part 60, appendix A §63.7(d)(1)(i)	(a) If using a control device, the sampling site must be located at the outlet of the control device.
		ii. Determine the O_2concentration of	(1) Method 3 or 3A or 3B of 40 CFR part 60, appendix A, or	(a) Measurements to determine O_2concentration must be made at

		the stationary RICE exhaust at the sampling port location; and	ASTM Method D6522–00 (2005)	the same time and location as the measurements for formaldehyde concentration.
		iii. Measure moisture content of the stationary RICE exhaust at the sampling port location; and	(1) Method 4 of 40 CFR part 60, appendix A, or Test Method 320 of 40 CFR part 63, appendix A, or ASTM D 6348–03	(a) Measurements to determine moisture content must be made at the same time and location as the measurements for formaldehyde concentration.
		iv. Measure formaldehyde at the exhaust of the stationary RICE; or	(1) Method 320 or 323 of 40 CFR part 63, appendix A; or ASTM D6348–03,[c]provided in ASTM D6348–03 Annex A5 (Analyte Spiking Technique), the percent R must be greater than or equal to 70 and less than or equal to 130	(a) Formaldehyde concentration must be at 15 percent O_2, dry basis. Results of this test consist of the average of the three 1-hour or longer runs.
		v. Measure CO at the exhaust of the stationary RICE	(1) Method 10 of 40 CFR part 60, appendix A, ASTM Method D6522–00 (2005),[a]Method 320 of 40 CFR part 63, appendix A, or ASTM D6348–03	(a) CO Concentration must be at 15 percent O_2, dry basis. Results of this test consist of the average of the three 1-hour longer runs.

[a]You may also use Methods 3A and 10 as options to ASTM–D6522–00 (2005). You may obtain a copy of ASTM–D6522–00 (2005) from at least one of the following addresses: American Society for Testing and Materials, 100 Barr Harbor Drive, West Conshohocken, PA 19428–2959, or University Microfilms International, 300 North Zeeb Road, Ann Arbor, MI 48106. ASTM–D6522–00 (2005) may be used to test both CI and SI stationary RICE.

[b]You may also use Method 320 of 40 CFR part 63, appendix A, or ASTM D6348–03.

[c]You may obtain a copy of ASTM–D6348–03 from at least one of the following addresses: American Society for Testing and Materials, 100 Barr Harbor Drive, West Conshohocken, PA 19428–2959, or University Microfilms International, 300 North Zeeb Road, Ann Arbor, MI 48106.

[75 FR 51597, Aug. 20, 2010]

Table 5 to Subpart ZZZZ of Part 63—Initial Compliance With Emission Limitations and Operating Limitations

As stated in §§63.6612, 63.6625 and 63.6630, you must initially comply with the emission and operating limitations as required by the following:

For each . . .	Complying with the requirement to . . .	You have demonstrated initial compliance if. . .

1. New or reconstructed non-emergency 2SLB stationary RICE >500 HP located at a major source of HAP, new or reconstructed non-emergency 4SLB stationary RICE ≥250 HP located at a major source of HAP, non-emergency stationary CI RICE >500 HP located at a major source of HAP, existing non-emergency stationary CI RICE >500 HP located at an area source of HAP, and existing non-emergency 4SLB stationary RICE >500 HP located at an area source of HAP that are operated more than 24 hours per calendar year	a. Reduce CO emissions and using oxidation catalyst, and using a CPMS	i. The average reduction of emissions of CO determined from the initial performance test achieves the required CO percent reduction; and ii. You have installed a CPMS to continuously monitor catalyst inlet temperature according to the requirements in §63.6625(b); and iii. You have recorded the catalyst pressure drop and catalyst inlet temperature during the initial performance test.
2. Non-emergency stationary CI RICE >500 HP located at a major source of HAP, existing non-emergency stationary CI RICE >500 HP located at an area source of HAP, and existing non-emergency 4SLB stationary RICE >500 HP located at an area source of HAP that are operated more than 24 hours per calendar year	a. Limit the concentration of CO, using oxidation catalyst, and using a CPMS	i. The average CO concentration determined from the initial performance test is less than or equal to the CO emission limitation; and ii. You have installed a CPMS to continuously monitor catalyst inlet temperature according to the requirements in §63.6625(b); and iii. You have recorded the catalyst pressure drop and catalyst inlet temperature during the initial performance test.
3. New or reconstructed non-emergency 2SLB stationary RICE >500 HP located at a major source of HAP, new or reconstructed non-emergency 4SLB stationary RICE ≥250 HP located at a major source of HAP, non-emergency stationary CI RICE >500 HP located at a major source of HAP, existing non-emergency stationary CI RICE >500 HP located at an area source of HAP, and existing non-emergency 4SLB stationary RICE >500 HP located at an area source of HAP that are operated more than 24 hours per calendar year	a. Reduce CO emissions and not using oxidation catalyst	i. The average reduction of emissions of CO determined from the initial performance test achieves the required CO percent reduction; and ii. You have installed a CPMS to continuously monitor operating parameters approved by the Administrator (if any) according to the requirements in §63.6625(b); and iii. You have recorded the approved operating parameters (if any) during the initial performance test.
4. Non-emergency stationary CI RICE >500 HP located at a major source of HAP, existing non-emergency stationary CI RICE >500 HP located at an area source of HAP, and existing non-emergency 4SLB stationary RICE >500 HP located at an area source of HAP that are operated more than 24 hours per calendar year	a. Limit the concentration of CO, and not using oxidation catalyst	i. The average CO concentration determined from the initial performance test is less than or equal to the CO emission limitation; and ii. You have installed a CPMS to continuously monitor operating parameters approved by the Administrator (if any) according to the requirements in §63.6625(b); and iii. You have recorded the approved operating parameters (if any) during the initial performance test.
5. New or reconstructed non-emergency 2SLB stationary RICE >500 HP located at a major source of HAP, new or reconstructed non-emergency 4SLB stationary RICE ≥250 HP located at a major source of HAP, non-emergency stationary CI RICE >500 HP located at a major source of HAP, existing non-emergency stationary CI RICE >500 HP located at an area source of HAP, and existing non-emergency	a. Reduce CO emissions, and using a CEMS	i. You have installed a CEMS to continuously monitor CO and either O_2or CO_2at both the inlet and outlet of the oxidation catalyst according to the requirements in §63.6625(a); and ii. You have conducted a performance evaluation of your CEMS using PS 3 and 4A of 40 CFR part 60, appendix B; and

4SLB stationary RICE >500 HP located at an area source of HAP that are operated more than 24 hours per calendar year		iii. The average reduction of CO calculated using §63.6620 equals or exceeds the required percent reduction. The initial test comprises the first 4-hour period after successful validation of the CEMS. Compliance is based on the average percent reduction achieved during the 4-hour period.
6. Non-emergency stationary CI RICE >500 HP located at a major source of HAP, existing non-emergency stationary CI RICE >500 HP located at an area source of HAP, and existing non-emergency 4SLB stationary RICE >500 HP located at an area source of HAP that are operated more than 24 hours per calendar year	a. Limit the concentration of CO, and using a CEMS	i. You have installed a CEMS to continuously monitor CO and either O_2or CO_2at the outlet of the oxidation catalyst according to the requirements in §63.6625(a); and ii. You have conducted a performance evaluation of your CEMS using PS 3 and 4A of 40 CFR part 60, appendix B; and
		iii. The average concentration of CO calculated using §63.6620 is less than or equal to the CO emission limitation. The initial test comprises the first 4-hour period after successful validation of the CEMS. Compliance is based on the average concentration measured during the 4-hour period.
7. Non-emergency 4SRB stationary RICE >500 HP located at a major source of HAP, and existing non-emergency 4SRB stationary RICE >500 HP located at an area source of HAP that are operated more than 24 hours per calendar year	a. Reduce formaldehyde emissions and using NSCR	i. The average reduction of emissions of formaldehyde determined from the initial performance test is equal to or greater than the required formaldehyde percent reduction; and ii. You have installed a CPMS to continuously monitor catalyst inlet temperature according to the requirements in §63.6625(b); and
		iii. You have recorded the catalyst pressure drop and catalyst inlet temperature during the initial performance test.
8. Non-emergency 4SRB stationary RICE >500 HP located at a major source of HAP, and existing non-emergency 4SRB stationary RICE >500 HP located at an area source of HAP that are operated more than 24 hours per calendar year	a. Reduce formaldehyde emissions and not using NSCR	i. The average reduction of emissions of formaldehyde determined from the initial performance test is equal to or greater than the required formaldehyde percent reduction; and ii. You have installed a CPMS to continuously monitor operating parameters approved by the Administrator (if any) according to the requirements in §63.6625(b); and
		iii. You have recorded the approved operating parameters (if any) during the initial performance test.
9. Existing non-emergency 4SRB stationary RICE >500 HP located at an area source of HAP that are operated more than 24 hours per calendar year	a. Limit the concentration of formaldehyde and not using NSCR	i. The average formaldehyde concentration determined from the initial performance test is less than or equal to the formaldehyde emission limitation; and

		ii. You have installed a CPMS to continuously monitor operating parameters approved by the Administrator (if any) according to the requirements in §63.6625(b); and
		iii. You have recorded the approved operating parameters (if any) during the initial performance test.
10. New or reconstructed non-emergency stationary RICE >500 HP located at a major source of HAP, new or reconstructed non-emergency 4SLB stationary RICE 250≤HP≤500 located at a major source of HAP, and existing non-emergency 4SRB stationary RICE >500 HP	a. Limit the concentration of formaldehyde in the stationary RICE exhaust and using oxidation catalyst or NSCR	i. The average formaldehyde concentration, corrected to 15 percent O_2, dry basis, from the three test runs is less than or equal to the formaldehyde emission limitation; and ii. You have installed a CPMS to continuously monitor catalyst inlet temperature according to the requirements in §63.6625(b); and
		iii. You have recorded the catalyst pressure drop and catalyst inlet temperature during the initial performance test.
11. New or reconstructed non-emergency stationary RICE >500 HP located at a major source of HAP, new or reconstructed non-emergency 4SLB stationary RICE 250≤HP≤500 located at a major source of HAP, and existing non-emergency 4SRB stationary RICE >500 HP	a. Limit the concentration of formaldehyde in the stationary RICE exhaust and not using oxidation catalyst or NSCR	i. The average formaldehyde concentration, corrected to 15 percent O_2, dry basis, from the three test runs is less than or equal to the formaldehyde emission limitation; and ii. You have installed a CPMS to continuously monitor operating parameters approved by the Administrator (if any) according to the requirements in §63.6625(b); and
		iii. You have recorded the approved operating parameters (if any) during the initial performance test.
12. Existing non-emergency stationary RICE 100≤HP≤500 located at a major source of HAP, and existing non-emergency stationary CI RICE 300<HP≤500 located at an area source of HAP	a. Reduce CO or formaldehyde emissions	i. The average reduction of emissions of CO or formaldehyde, as applicable determined from the initial performance test is equal to or greater than the required CO or formaldehyde, as applicable, percent reduction.
13. Existing non-emergency stationary RICE 100≤HP≤500 located at a major source of HAP, and existing non-emergency stationary CI RICE 300<HP≤500 located at an area source of HAP	a. Limit the concentration of formaldehyde or CO in the stationary RICE exhaust	i. The average formaldehyde or CO concentration, as applicable, corrected to 15 percent O_2, dry basis, from the three test runs is less than or equal to the formaldehyde or CO emission limitation, as applicable.

[76 FR 12867, Mar. 9, 2011]

Table 6 to Subpart ZZZZ of Part 63—Continuous Compliance With Emission Limitations, Operating Limitations, Work Practices, and Management Practices

As stated in §63.6640, you must continuously comply with the emissions and operating limitations and work or management practices as required by the following:

For each . . .	Complying with the requirement to . . .	You must demonstrate continuous compliance by . . .
1. New or reconstructed non-emergency 2SLB stationary RICE >500 HP located at a major source of HAP, new or reconstructed non-emergency 4SLB stationary RICE ≥250 HP located at a major source of HAP, and new or reconstructed non-emergency CI stationary RICE >500 HP located at a major source of HAP	a. Reduce CO emissions and using an oxidation catalyst, and using a CPMS	i. Conducting semiannual performance tests for CO to demonstrate that the required CO percent reduction is achieved;[a]and ii. Collecting the catalyst inlet temperature data according to §63.6625(b); and iii. Reducing these data to 4-hour rolling averages; and iv. Maintaining the 4-hour rolling averages within the operating limitations for the catalyst inlet temperature; and
		v. Measuring the pressure drop across the catalyst once per month and demonstrating that the pressure drop across the catalyst is within the operating limitation established during the performance test.
2. New or reconstructed non-emergency 2SLB stationary RICE >500 HP located at a major source of HAP, new or reconstructed non-emergency 4SLB stationary RICE ≥250 HP located at a major source of HAP, and new or reconstructed non-emergency CI stationary RICE >500 HP located at a major source of HAP	a. Reduce CO emissions and not using an oxidation catalyst, and using a CPMS	i. Conducting semiannual performance tests for CO to demonstrate that the required CO percent reduction is achieved;[a]and ii. Collecting the approved operating parameter (if any) data according to §63.6625(b); and iii. Reducing these data to 4-hour rolling averages; and
		iv. Maintaining the 4-hour rolling averages within the operating limitations for the operating parameters established during the performance test.
3. New or reconstructed non-emergency 2SLB stationary RICE >500 HP located at a major source of HAP, new or reconstructed non-emergency 4SLB stationary RICE ≥250 HP located at a major source of HAP, new or reconstructed non-emergency stationary CI RICE >500 HP located at a major source of HAP, existing non-emergency stationary CI RICE >500 HP, existing non-emergency 4SLB stationary RICE >500 HP located at an area source of HAP that are operated more than 24 hours per calendar year	a. Reduce CO emissions or limit the concentration of CO in the stationary RICE exhaust, and using a CEMS	i. Collecting the monitoring data according to §63.6625(a), reducing the measurements to 1-hour averages, calculating the percent reduction or concentration of CO emissions according to §63.6620; and ii. Demonstrating that the catalyst achieves the required percent reduction of CO emissions over the 4-hour averaging period, or that the emission remain at or below the CO concentration limit; and iii. Conducting an annual RATA of your CEMS using PS 3 and 4A of 40 CFR part 60, appendix B, as well as daily and periodic data quality checks in accordance with 40 CFR part 60, appendix F, procedure 1.

4. Non-emergency 4SRB stationary RICE >500 HP located at a major source of HAP	a. Reduce formaldehyde emissions and using NSCR	i. Collecting the catalyst inlet temperature data according to §63.6625(b); and
		ii. Reducing these data to 4-hour rolling averages; and
		iii. Maintaining the 4-hour rolling averages within the operating limitations for the catalyst inlet temperature; and
		iv. Measuring the pressure drop across the catalyst once per month and demonstrating that the pressure drop across the catalyst is within the operating limitation established during the performance test.
5. Non-emergency 4SRB stationary RICE >500 HP located at a major source of HAP	a. Reduce formaldehyde emissions and not using NSCR	i. Collecting the approved operating parameter (if any) data according to §63.6625(b); and ii. Reducing these data to 4-hour rolling averages; and
		iii. Maintaining the 4-hour rolling averages within the operating limitations for the operating parameters established during the performance test.
6. Non-emergency 4SRB stationary RICE with a brake HP ≥5,000 located at a major source of HAP	a. Reduce formaldehyde emissions	Conducting semiannual performance tests for formaldehyde to demonstrate that the required formaldehyde percent reduction is achieved.[a]
7. New or reconstructed non-emergency stationary RICE >500 HP located at a major source of HAP and new or reconstructed non-emergency 4SLB stationary RICE 250 ≤HP≤500 located at a major source of HAP	a. Limit the concentration of formaldehyde in the stationary RICE exhaust and using oxidation catalyst or NSCR	i. Conducting semiannual performance tests for formaldehyde to demonstrate that your emissions remain at or below the formaldehyde concentration limit;[a]and ii. Collecting the catalyst inlet temperature data according to §63.6625(b); and
		iii. Reducing these data to 4-hour rolling averages; and
		iv. Maintaining the 4-hour rolling averages within the operating limitations for the catalyst inlet temperature; and
		v. Measuring the pressure drop across the catalyst once per month and demonstrating that the pressure drop across the catalyst is within the operating limitation established during the performance test.
8. New or reconstructed non-emergency stationary RICE >500 HP located at a major source of HAP and new or reconstructed non-emergency 4SLB stationary RICE 250 ≤HP≤500 located at a major source of HAP	a. Limit the concentration of formaldehyde in the stationary RICE exhaust and not using oxidation catalyst or NSCR	i. Conducting semiannual performance tests for formaldehyde to demonstrate that your emissions remain at or below the formaldehyde concentration limit;[a]and ii. Collecting the approved operating parameter (if any) data according to §63.6625(b); and
		iii. Reducing these data to 4-hour rolling averages; and

		iv. Maintaining the 4-hour rolling averages within the operating limitations for the operating parameters established during the performance test.
9. Existing emergency and black start stationary RICE ≤500 HP located at a major source of HAP, existing non-emergency stationary RICE <100 HP located at a major source of HAP, existing emergency and black start stationary RICE located at an area source of HAP, existing non-emergency stationary CI RICE ≤300 HP located at an area source of HAP, existing non-emergency 2SLB stationary RICE located at an area source of HAP, existing non-emergency landfill or digester gas stationary SI RICE located at an area source of HAP, existing non-emergency 4SLB and 4SRB stationary RICE ≤500 HP located at an area source of HAP, existing non-emergency 4SLB and 4SRB stationary RICE >500 HP located at an area source of HAP that operate 24 hours or less per calendar year	a. Work or Management practices	i. Operating and maintaining the stationary RICE according to the manufacturer's emission-related operation and maintenance instructions; or ii. Develop and follow your own maintenance plan which must provide to the extent practicable for the maintenance and operation of the engine in a manner consistent with good air pollution control practice for minimizing emissions.
10. Existing stationary CI RICE >500 HP that are not limited use stationary RICE, and existing 4SLB and 4SRB stationary RICE >500 HP located at an area source of HAP that operate more than 24 hours per calendar year and are not limited use stationary RICE	a. Reduce CO or formaldehyde emissions, or limit the concentration of formaldehyde or CO in the stationary RICE exhaust, and using oxidation catalyst or NSCR	i. Conducting performance tests every 8,760 hours or 3 years, whichever comes first, for CO or formaldehyde, as appropriate, to demonstrate that the required CO or formaldehyde, as appropriate, percent reduction is achieved or that your emissions remain at or below the CO or formaldehyde concentration limit; and
		ii. Collecting the catalyst inlet temperature data according to §63.6625(b); and
		iii. Reducing these data to 4-hour rolling averages; and
		iv. Maintaining the 4-hour rolling averages within the operating limitations for the catalyst inlet temperature; and
		v. Measuring the pressure drop across the catalyst once per month and demonstrating that the pressure drop across the catalyst is within the operating limitation established during the performance test.
11. Existing stationary CI RICE >500 HP that are not limited use stationary RICE, and existing 4SLB and 4SRB stationary RICE >500 HP located at an area source of HAP that operate more than 24 hours per calendar year and are not limited use stationary RICE	a. Reduce CO or formaldehyde emissions, or limit the concentration of formaldehyde or CO in the stationary RICE exhaust, and not using oxidation catalyst or NSCR	i. Conducting performance tests every 8,760 hours or 3 years, whichever comes first, for CO or formaldehyde, as appropriate, to demonstrate that the required CO or formaldehyde, as appropriate, percent reduction is achieved or that your emissions remain at or below the CO or formaldehyde concentration limit; and
		ii. Collecting the approved operating parameter (if any) data according to

		§63.6625(b); and
		iii. Reducing these data to 4-hour rolling averages; and
		iv. Maintaining the 4-hour rolling averages within the operating limitations for the operating parameters established during the performance test.
12. Existing limited use CI stationary RICE >500 HP and existing limited use 4SLB and 4SRB stationary RICE >500 HP located at an area source of HAP that operate more than 24 hours per calendar year	a. Reduce CO or formaldehyde emissions or limit the concentration of formaldehyde or CO in the stationary RICE exhaust, and using an oxidation catalyst or NSCR	i. Conducting performance tests every 8,760 hours or 5 years, whichever comes first, for CO or formaldehyde, as appropriate, to demonstrate that the required CO or formaldehyde, as appropriate, percent reduction is achieved or that your emissions remain at or below the CO or formaldehyde concentration limit; and
		ii. Collecting the catalyst inlet temperature data according to §63.6625(b); and
		iii. Reducing these data to 4-hour rolling averages; and
		iv. Maintaining the 4-hour rolling averages within the operating limitations for the catalyst inlet temperature; and
		v. Measuring the pressure drop across the catalyst once per month and demonstrating that the pressure drop across the catalyst is within the operating limitation established during the performance test.
13. Existing limited use CI stationary RICE >500 HP and existing limited use 4SLB and 4SRB stationary RICE >500 HP located at an area source of HAP that operate more than 24 hours per calendar year	a. Reduce CO or formaldehyde emissions or limit the concentration of formaldehyde or CO in the stationary RICE exhaust, and not using an oxidation catalyst or NSCR	i. Conducting performance tests every 8,760 hours or 5 years, whichever comes first, for CO or formaldehyde, as appropriate, to demonstrate that the required CO or formaldehyde, as appropriate, percent reduction is achieved or that your emissions remain at or below the CO or formaldehyde concentration limit; and
		ii. Collecting the approved operating parameter (if any) data according to §63.6625(b); and
		iii. Reducing these data to 4-hour rolling averages; and
		iv. Maintaining the 4-hour rolling averages within the operating limitations for the operating parameters established during the performance test.

[a]After you have demonstrated compliance for two consecutive tests, you may reduce the frequency of subsequent performance tests to annually. If the results of any subsequent annual performance test indicate the stationary RICE is not in compliance with the CO or

formaldehyde emission limitation, or you deviate from any of your operating limitations, you must resume semiannual performance tests.

[76 FR 12870, Mar. 9, 2011]

Table 7 to Subpart ZZZZ of Part 63—Requirements for Reports

As stated in §63.6650, you must comply with the following requirements for reports:

For each ...	You must submit a ...	The report must contain ...	You must submit the report ...
1. Existing non-emergency, non-black start stationary RICE 100≤HP≤500 located at a major source of HAP; existing non-emergency, non-black start stationary CI RICE >500 HP located at a major source of HAP; existing non-emergency 4SRB stationary RICE >500 HP located at a major source of HAP; existing non-emergency, non-black start stationary CI RICE >300 HP located at an area source of HAP; existing non-emergency, non-black start 4SLB and 4SRB stationary RICE >500 HP located at an area source of HAP and operated more than 24 hours per calendar year; new or reconstructed non-emergency stationary RICE >500 HP located at a major source of HAP; and new or reconstructed non-emergency 4SLB stationary RICE 250≤HP≤500 located at a major source of HAP	Compliance report	a. If there are no deviations from any emission limitations or operating limitations that apply to you, a statement that there were no deviations from the emission limitations or operating limitations during the reporting period. If there were no periods during which the CMS, including CEMS and CPMS, was out-of-control, as specified in §63.8(c)(7), a statement that there were not periods during which the CMS was out-of-control during the reporting period; or b. If you had a deviation from any emission limitation or operating limitation during the reporting period, the information in §63.6650(d). If there were periods during which the CMS, including CEMS and CPMS, was out-of-control, as specified in §63.8(c)(7), the information in §63.6650(e); or c. If you had a malfunction during the reporting period, the information in §63.6650(c)(4) i. Semiannually according to the requirements in §63.6650(b)(1)–(5) for engines that are not limited use stationary RICE subject to numerical emission limitations; and ii. Annually according to the requirements in §63.6650(b)(6)–(9) for engines that are limited use stationary RICE subject to numerical emission limitations. i. Semiannually according to the requirements in §63.6650(b). i. Semiannually according to the requirements in §63.6650(b).	
2. New or reconstructed non-emergency stationary RICE that combusts landfill gas or digester gas equivalent to 10 percent or more of the gross heat input on an annual basis	Report	a. The fuel flow rate of each fuel and the heating values that were used in your calculations, and you must demonstrate that the percentage of heat input provided by landfill gas or digester gas, is equivalent to 10 percent or more of the gross heat input on an annual basis; and i. Annually, according to the requirements in §63.6650.	
		b. The operating limits provided in your federally	

		enforceable permit, and any deviations from these limits; and i. See item 2.a.i.	
		c. Any problems or errors suspected with the meters. i. See item 2.a.i.	

[75 FR 51603, Aug. 20, 2010]

Table 8 to Subpart ZZZZ of Part 63—Applicability of General Provisions to Subpart ZZZZ.

As stated in §63.6665, you must comply with the following applicable general provisions.

General provisions citation	Subject of citation	Applies to subpart	Explanation
§63.1	General applicability of the General Provisions	Yes.	
§63.2	Definitions	Yes	Additional terms defined in §63.6675.
§63.3	Units and abbreviations	Yes.	
§63.4	Prohibited activities and circumvention	Yes.	
§63.5	Construction and reconstruction	Yes.	
§63.6(a)	Applicability	Yes.	
§63.6(b)(1)–(4)	Compliance dates for new and reconstructed sources	Yes.	
§63.6(b)(5)	Notification	Yes.	
§63.6(b)(6)	[Reserved]		
§63.6(b)(7)	Compliance dates for new and reconstructed area sources that become major sources	Yes.	
§63.6(c)(1)–(2)	Compliance dates for existing sources	Yes.	
§63.6(c)(3)–(4)	[Reserved]		
§63.6(c)(5)	Compliance dates for existing area sources that become major sources	Yes.	
§63.6(d)	[Reserved]		
§63.6(e)	Operation and maintenance	No.	
§63.6(f)(1)	Applicability of standards	No.	
§63.6(f)(2)	Methods for determining compliance	Yes.	
§63.6(f)(3)	Finding of compliance	Yes.	

§63.6(g)(1)–(3)	Use of alternate standard	Yes.	
§63.6(h)	Opacity and visible emission standards	No	Subpart ZZZZ does not contain opacity or visible emission standards.
§63.6(i)	Compliance extension procedures and criteria	Yes.	
§63.6(j)	Presidential compliance exemption	Yes.	
§63.7(a)(1)–(2)	Performance test dates	Yes	Subpart ZZZZ contains performance test dates at §§63.6610, 63.6611, and 63.6612.
§63.7(a)(3)	CAA section 114 authority	Yes.	
§63.7(b)(1)	Notification of performance test	Yes	Except that §63.7(b)(1) only applies as specified in §63.6645.
§63.7(b)(2)	Notification of rescheduling	Yes	Except that §63.7(b)(2) only applies as specified in §63.6645.
§63.7(c)	Quality assurance/test plan	Yes	Except that §63.7(c) only applies as specified in §63.6645.
§63.7(d)	Testing facilities	Yes.	
§63.7(e)(1)	Conditions for conducting performance tests	No.	Subpart ZZZZ specifies conditions for conducting performance tests at §63.6620.
§63.7(e)(2)	Conduct of performance tests and reduction of data	Yes	Subpart ZZZZ specifies test methods at §63.6620.
§63.7(e)(3)	Test run duration	Yes.	
§63.7(e)(4)	Administrator may require other testing under section 114 of the CAA	Yes.	
§63.7(f)	Alternative test method provisions	Yes.	
§63.7(g)	Performance test data analysis, recordkeeping, and reporting	Yes.	
§63.7(h)	Waiver of tests	Yes.	
§63.8(a)(1)	Applicability of monitoring requirements	Yes	Subpart ZZZZ contains specific requirements for monitoring at §63.6625.
§63.8(a)(2)	Performance specifications	Yes.	
§63.8(a)(3)	[Reserved]		
§63.8(a)(4)	Monitoring for control devices	No.	
§63.8(b)(1)	Monitoring	Yes.	
§63.8(b)(2)–(3)	Multiple effluents and multiple monitoring systems	Yes.	
§63.8(c)(1)	Monitoring system operation and maintenance	Yes.	
§63.8(c)(1)(i)	Routine and predictable SSM	Yes.	
§63.8(c)(1)(ii)	SSM not in Startup Shutdown	Yes.	

	Malfunction Plan		
§63.8(c)(1)(iii)	Compliance with operation and maintenance requirements	Yes.	
§63.8(c)(2)–(3)	Monitoring system installation	Yes.	
§63.8(c)(4)	Continuous monitoring system (CMS) requirements	Yes	Except that subpart ZZZZ does not require Continuous Opacity Monitoring System (COMS).
§63.8(c)(5)	COMS minimum procedures	No	Subpart ZZZZ does not require COMS.
§63.8(c)(6)–(8)	CMS requirements	Yes	Except that subpart ZZZZ does not require COMS.
§63.8(d)	CMS quality control	Yes.	
§63.8(e)	CMS performance evaluation	Yes	Except for §63.8(e)(5)(ii), which applies to COMS.
		Except that §63.8(e) only applies as specified in §63.6645.	
§63.8(f)(1)–(5)	Alternative monitoring method	Yes	Except that §63.8(f)(4) only applies as specified in §63.6645.
§63.8(f)(6)	Alternative to relative accuracy test	Yes	Except that §63.8(f)(6) only applies as specified in §63.6645.
§63.8(g)	Data reduction	Yes	Except that provisions for COMS are not applicable. Averaging periods for demonstrating compliance are specified at §§63.6635 and 63.6640.
§63.9(a)	Applicability and State delegation of notification requirements	Yes.	
§63.9(b)(1)–(5)	Initial notifications	Yes	Except that §63.9(b)(3) is reserved.
		Except that §63.9(b) only applies as specified in §63.6645.	
§63.9(c)	Request for compliance extension	Yes	Except that §63.9(c) only applies as specified in §63.6645.
§63.9(d)	Notification of special compliance requirements for new sources	Yes	Except that §63.9(d) only applies as specified in §63.6645.
§63.9(e)	Notification of performance test	Yes	Except that §63.9(e) only applies as specified in §63.6645.
§63.9(f)	Notification of visible emission (VE)/opacity test	No	Subpart ZZZZ does not contain opacity or VE standards.
§63.9(g)(1)	Notification of performance evaluation	Yes	Except that §63.9(g) only applies as specified in §63.6645.
§63.9(g)(2)	Notification of use of COMS data	No	Subpart ZZZZ does not contain opacity or VE standards.
§63.9(g)(3)	Notification that criterion for	Yes	If alternative is in use.

	alternative to RATA is exceeded		
		Except that §63.9(g) only applies as specified in §63.6645.	
§63.9(h)(1)–(6)	Notification of compliance status	Yes	Except that notifications for sources using a CEMS are due 30 days after completion of performance evaluations. §63.9(h)(4) is reserved.
			Except that §63.9(h) only applies as specified in §63.6645.
§63.9(i)	Adjustment of submittal deadlines	Yes.	
§63.9(j)	Change in previous information	Yes.	
§63.10(a)	Administrative provisions for recordkeeping/reporting	Yes.	
§63.10(b)(1)	Record retention	Yes.	
§63.10(b)(2)(i)–(v)	Records related to SSM	No.	
§63.10(b)(2)(vi)–(xi)	Records	Yes.	
§63.10(b)(2)(xii)	Record when under waiver	Yes.	
§63.10(b)(2)(xiii)	Records when using alternative to RATA	Yes	For CO standard if using RATA alternative.
§63.10(b)(2)(xiv)	Records of supporting documentation	Yes.	
§63.10(b)(3)	Records of applicability determination	Yes.	
§63.10(c)	Additional records for sources using CEMS	Yes	Except that §63.10(c)(2)–(4) and (9) are reserved.
§63.10(d)(1)	General reporting requirements	Yes.	
§63.10(d)(2)	Report of performance test results	Yes.	
§63.10(d)(3)	Reporting opacity or VE observations	No	Subpart ZZZZ does not contain opacity or VE standards.
§63.10(d)(4)	Progress reports	Yes.	
§63.10(d)(5)	Startup, shutdown, and malfunction reports	No.	
§63.10(e)(1) and (2)(i)	Additional CMS Reports	Yes.	
§63.10(e)(2)(ii)	COMS-related report	No	Subpart ZZZZ does not require COMS.
§63.10(e)(3)	Excess emission and parameter exceedances reports	Yes.	Except that §63.10(e)(3)(i) (C) is reserved.
§63.10(e)(4)	Reporting COMS data	No	Subpart ZZZZ does not require COMS.
§63.10(f)	Waiver for recordkeeping/reporting	Yes.	

§63.11	Flares	No.	
§63.12	State authority and delegations	Yes.	
§63.13	Addresses	Yes.	
§63.14	Incorporation by reference	Yes.	
§63.15	Availability of information	Yes.	

[75 FR 9688, Mar. 3, 2010]

Instructions for Form FRA

Item 4 & 5. It is important that facilities review the most recent federal regulations when submitting their permit application to DEQ. Current federal regulations can be found at the following Web site: http://ecfr.gpoaccess.gov/cgi/t/text/text-idx?&c=ecfr&tpl=/ecfrbrowse/Title40/40tab_02.tpl.

Item 6. For each applicable subpart identified under items 4-5 conduct a complete regulatory analysis. The facility must follow the procedure given below or obtain permission from DEQ to provide the necessary information using an alternative procedure:

1. Retrieve a TEXT or PDF copy of the applicable federal regulation subpart(s) online at http://www.gpoaccess.gov/cfr/retrieve.html
2. Copy and paste the regulation(s) into your DEQ air permit application.
3. Highlight or underline sections in the regulation(s) that are applicable to the source(s).
4. Under each section of the subpart, explain why the source is subject to the section, or why the source is not subject to the section. When providing the explanation use a different font than the regulation (i.e. ***bold, italic***) so that it is easy for the reader to determine the text that the applicant has provided. An example NSPS regulatory analysis is attached. The applicant must provide all necessary information needed to determine applicability. If information is lacking or the analysis is incomplete the application will be determined incomplete.

   EPA provides a web site dedicated to NSPS/NESHAP applicability determinations that may be useful to applicants. Follow this link to the applicability determination index Clean Air Act Applicability Determination Index - Compliance Monitoring - EPA. Another useful source of information is the preamble to the regulation which is published in the Federal Register on the date the regulation was promulgated. Federal Registers may be found online at Federal Register: Main Page. The date the regulation was published in the Federal Register is included in the footnotes of the regulation.
5. DEQ will assist in identifying the applicable requirements that the applicant must include in the application but will not perform the required technical or regulatory analysis on the applicant's behalf. Applicants should contact the Air Quality Permit Hotline (1-877-573-7648) to discuss NSPS/NESHAP regulatory analysis requirements or to schedule a meeting.
6. It also benefits facilities to document a non-applicability determination on federal air regulations which appear to apply to the facility but actually do not. A non-applicability determination will avoid future confusion and expedite the air permit application review. If you conduct an applicability determination and find that your activity is not NSPS or NESHAP affected facility an analysis should be submitted using the methods described above.

7. **It is not sufficient to simply provide a copy of the NSPS or NESHAP. The applicant must address each section of the regulation as described above and as shown in the example that is provided.**

EXAMPLE OF A NSPS REGULATORY ANALYSIS

[Title 40, Volume 6]
[Revised as of July 1, 2008]
From the U.S. Government Printing Office via GPO Access
[CITE: 40CFR60]

TITLE 40--PROTECTION OF ENVIRONMENT

CHAPTER I--ENVIRONMENTAL PROTECTION AGENCY (CONTINUED)

PART 60_STANDARDS OF PERFORMANCE FOR NEW STATIONARY SOURCES--
Table of Contents

Subpart H_Standards of Performance for Sulfuric Acid Plants

Sec.60.80 Applicability and designation of affected facility.

(a) The provisions of this subpart are applicable to each sulfuric acid production unit, which is the affected facility.
(b) Any facility under paragraph (a) of this section that commences construction or modification after August 17, 1971, is subject to the requirements of this subpart.

ACME Chemicals, Inc. is proposing to construct after August 17, 1971 a sulfuric acid plant which burns elemental sulfur as defined by 40 CFR 60.81(a). ACME is therefore affected by this subpart.

(Be sure to use the terms of the regulation to describe applicability; usually applicability is determined based on a specific date, definition of an affected facility, and rated input capacity. All of the applicability criteria must be addressed by the applicant.)

Note - if a determination of non-applicability is being submitted it is not necessary to address the remaining non-applicable regulatory sections. Be sure to provide the applicability determination in terms of the regulation (i.e. construction/modification date, rated input capacity, definition of affected facility).

Sec.60.81 Definitions.

As used in this subpart, all terms not defined herein shall have the meaning given them in the Act and in subpart A of this part.
(a) Sulfuric acid production unit means any facility producing sulfuric acid by the contact process by burning elemental sulfur, alkylation acid, hydrogen sulfide, organic sulfides and mercaptans, or acid sludge, but does not include facilities where conversion to sulfuric acid is utilized primarily as a means of preventing emissions to the atmosphere of sulfur dioxide or other sulfur compounds.
(b) Acid mist means sulfuric acid mist, as measured by Method 8 of appendix A to this part or an equivalent or alternative method.

ACME Chemicals, Inc. has read and understands these definitions and used them in providing this regulatory analysis.

Sec.60.82 Standard for sulfur dioxide.

(a) On and after the date on which the performance test required to be conducted by Sec.60.8 is completed, no owner or operator subject to the provisions of this subpart shall cause to be discharged into the atmosphere from any affected facility any gases which contain sulfur dioxide in excess of 2 kg per metric ton of acid produced (4 lb per ton), the production being expressed as 100 percent H2/SO4/.

ACME Chemicals, Inc. is subject to this standard and has provided a documented emission inventory (or manufacturer guarantee) which shows compliance.

Sec.60.83 Standard for acid mist.

(a) On and after the date on which the performance test required to be conducted by Sec.60.8 is completed, no owner or operator subject to the provisions of this subpart shall cause to be discharged into the atmosphere from any affected facility any gases which:

(1) Contain acid mist, expressed as H2/SO4/, in excess of 0.075 kg per metric ton of acid produced (0.15 lb per ton), the production being expressed as 100 percent H2/SO4/.

ACME Chemicals, Inc. is subject to this standard and has provided a documented emission inventory (or manufacturer guarantee) which shows compliance.

(2) Exhibit 10 percent opacity, or greater.

ACME Chemicals, Inc. understands that this will become a permit condition and has supplied a manufacturer guarantee that the sulfuric acid plant will comply with this standard.

Sec.60.84 Emission monitoring.

(a) A continuous monitoring system for the measurement of sulfur dioxide shall be installed, calibrated, maintained, and operated by the owner or operator. The pollutant gas used to prepare calibration gas mixtures under Performance Specification 2 and for calibration checks under Sec.60.13(d), shall be sulfur dioxide (SO2/). Method 8 shall be used for conducting monitoring system performance evaluations under Sec.60.13(c) except that only the sulfur dioxide portion of the Method 8 results shall be used. The span value shall be set at 1000 ppm of sulfur dioxide.

(b) The owner or operator shall establish a conversion factor for the purpose of converting monitoring data into units of the applicable standard (kg/metric ton, lb/ton). The conversion factor shall be determined, as a minimum, three times daily by measuring the concentration of sulfur dioxide entering the converter using suitable methods (e.g., the Reich test, National Air Pollution Control Administration Publication No. 999-AP-13) and calculating the appropriate conversion factor for each eight-hour period as follows:

$$CF=k[(1.000-0.015r)/(r-s)]$$

where:

CF=conversion factor (kg/metric ton per ppm, lb/ton per ppm).
k=constant derived from material balance. For determining CF in metric units, k=0.0653. For determining CF in English units, k=0.1306.
r=percentage of sulfur dioxide by volume entering the gas converter. Appropriate corrections must be made for air injection plants subject to the Administrator's approval.
s=percentage of sulfur dioxide by volume in the emissions to the atmosphere determined by the continuous monitoring system required under paragraph (a) of this section.

(c) The owner or operator shall record all conversion factors and values under paragraph (b) of this section from which they were computed (i.e., CF, r, and s).

ACME Chemicals, Inc. is not proposing to utilize Sections 60.84(a)-(c)listed above to monitor emissions. Instead ACME Chemicals is utilizing 40 CFR 60.84(d) listed below to monitor emissions of sulfur dioxide.

(d) Alternatively, a source that processes elemental sulfur or an ore that contains elemental sulfur and uses air to supply oxygen may use the following continuous emission monitoring approach and calculation procedures in determining SO2/ emission rates in terms of the standard. This procedure is not required, but is an alternative that would alleviate problems encountered in the measurement of gas velocities or production rate. Continuous emission monitoring systems for measuring SO2/, O2/, and CO2/ (if required) shall be installed, calibrated, maintained, and operated by the owner or operator and subjected to the certification procedures in Performance Specifications 2 and 3. The calibration procedure and span value for the SO2/ monitor shall be as specified in paragraph (b) of this section. The span value for CO2/ (if required) shall be 10 percent and for O2/ shall be 20.9 percent (air). A conversion factor based on process rate data is not necessary. Calculate the SO2/ emission rate as follows:

Es/=(Cs/ S)/[0.265-(0.126 %O2/)-(A %CO2/)]

where:

Es/=emission rate of SO2/, kg/metric ton (lb/ton) of 100 percent of H2/SO4/ produced.
Cs/=concentration of SO2/, kg/dscm (lb/dscf).
S=acid production rate factor, 368 dscm/metric ton (11,800 dscf/ton) of 100 percent H2/SO4/ produced.
%O2/=oxygen concentration, percent dry basis.
A=auxiliary fuel factor,
=0.00 for no fuel.
=0.0226 for methane.
=0.0217 for natural gas.
=0.0196 for propane.
=0.0172 for No 2 oil.
=0.0161 for No 6 oil.
=0.0148 for coal.
=0.0126 for coke.
%CO2/= carbon dioxide concentration, percent dry basis.

Note: It is necessary in some cases to convert measured concentration units to other units for these calculations:

Use the following table for such conversions:

From--	To--	Multiply by--
g/scm.....	kg/scm.....	10-3
mg/scm.....	kg/scm.....	10-6
ppm (SO2).....	kg/scm.....	2.660x10-6
ppm (SO2).....	lb/scf.....	1.660x10-7

ACME Chemicals, Inc. has elected to use the monitoring requirements of the preceding section.

(e) For the purpose of reports under Sec.60.7(c), periods of excess emissions shall be all three-hour periods (or the arithmetic average of three consecutive one-hour periods) during which the integrated average sulfur dioxide emissions exceed the applicable standards under Sec.60.82.

ACME acknowledges that this section applies to the sulfuric acid plant.

Sec.60.85 Test methods and procedures.

(a) In conducting the performance tests required in Sec.60.8, the owner or operator shall use as reference methods and procedures the test methods in appendix A of this part or other methods and procedures as specified in this section, except as provided in Sec.60.8(b). Acceptable alternative methods and procedures are given in paragraph (c) of this section.

(b) The owner or operator shall determine compliance with the SO2/ acid mist, and visible emission standards in Sec. Sec. 60.82 and 60.83 as follows:

(1) The emission rate (E) of acid mist or SO2/ shall be computed for each run using the following equation:

E=(CQsd/)/(PK)

where:

E=emission rate of acid mist or SO2/ kg/metric ton (lb/ton) of 100 percent H2/SO4/ produced.
C=concentration of acid mist or SO2/, g/dscm (lb/dscf).
Qsd/=volumetric flow rate of the effluent gas, dscm/hr (dscf/hr).
P=production rate of 100 percent H2/SO4/, metric ton/hr (ton/hr).
K=conversion factor, 1000 g/kg (1.0 lb/lb).

(2) Method 8 shall be used to determine the acid mist and SO2/ concentrations (C's) and the volumetric flow rate (Qsd/) of the effluent gas. The moisture content may be considered to be zero. The sampling time and sample volume for each run shall be at least 60 minutes and 1.15 dscm (40.6 dscf).

(3) Suitable methods shall be used to determine the production rate (P) of 100 percent H2/SO4/ for each run. Material balance over the production system shall be used to confirm the production rate.

(4) Method 9 and the procedures in Sec.60.11 shall be used to determine opacity.

(c) The owner or operator may use the following as alternatives to

the reference methods and procedures specified in this section:

(1) If a source processes elemental sulfur or an ore that contains elemental sulfur and uses air to supply oxygen, the following procedure may be used instead of determining the volumetric flow rate and production rate:

(i) The integrated technique of Method 3 is used to determine the O2/ concentration and, if required, CO2/ concentration.

(ii) The SO2/ or acid mist emission rate is calculated as described in Sec.60.84(d), substituting the acid mist concentration for Cs/ as appropriate.

ACME Chemicals, Inc. acknowledges that performance tests shall be conducted as specified above.

Model: 230REOZJB

KOHLER POWER SYSTEMS

190-600 V **Diesel**

ISO 9001
KOHLER POWER SYSTEMS
NATIONALLY REGISTERED

Ratings Range

		60 Hz	50 Hz
Standby:	**kW**	225-230	196-200
	kVA	281-288	245-250
Prime:	**kW**	190	168
	kVA	238	210

Generator Set Ratings

				130°C Rise Standby Rating		105°C Rise Prime Rating	
Alternator	**Voltage**	**Ph**	**Hz**	**kW/kVA**	**Amps**	**kW/kVA**	**Amps**
	120/208	3	60	225/281	781	190/238	659
	127/220	3	60	225/281	738	190/238	623
	120/240	3	60	225/281	677	190/238	571
	139/240	3	60	225/281	677	190/238	571
	220/380	3	60	225/281	427	190/238	361
	240/416	3	60	225/281	390	190/238	330
	277/480	3	60	225/281	338	190/238	286
4UA10	347/600	3	60	225/281	271	190/238	229
	110/190	3	50	196/245	744	168/210	638
	115/200	3	50	196/245	707	168/210	606
	120/208	3	50	196/245	680	168/210	583
	110/220	3	50	196/245	643	168/210	551
	220/380	3	50	196/245	372	168/210	319
	230/400	3	50	196/245	354	168/210	303
	240/416	3	50	196/245	340	168/210	291
	120/208	3	60	230/288	798	190/238	659
	127/220	3	60	230/288	755	190/238	623
	120/240	3	60	230/288	692	190/238	571
	139/240	3	60	230/288	692	190/238	571
	220/380	3	60	230/288	437	190/238	361
	240/416	3	60	230/288	399	190/238	330
	277/480	3	60	230/288	346	190/238	286
4UA13	347/600	3	60	230/288	277	190/238	229
	110/190	3	50	200/250	760	168/210	638
	115/200	3	50	200/250	722	168/210	606
	120/208	3	50	200/250	694	168/210	583
	110/220	3	50	200/250	656	168/210	551
	220/380	3	50	200/250	380	168/210	319
	230/400	3	50	200/250	361	168/210	303
	240/416	3	50	200/250	347	168/210	291

Standard Features

- Kohler Co. provides one-source responsibility for the generating system and accessories.
- The generator set and its components are prototype-tested, factory-built, and production-tested.
- The 60 Hz generator set offers a UL 2200 listing.
- The generator set accepts rated load in one step.
- The 60 Hz generator set meets NFPA 110, Level 1, when equipped with the necessary accessories and installed per NFPA standards.
- The generator set complies with ISO 8528-5, Class G2, requirements for transient performance in all generator set configurations. Select the Decision-Maker™ 550 controller for improved voltage regulation and ISO 8528-5, Class G3, compliance.
- A one-year limited warranty covers all systems and components. Two-, five-, and ten-year extended warranties are also available.
- Alternator features:
  - The unique Fast-Response™ II excitation system delivers excellent voltage response and short circuit capability using a permanent magnet (PM)-excited alternator.
  - The brushless, rotating-field alternator has broadrange reconnectability.
- Other features:
  - Controllers are available for all applications. See controller features inside.
  - The low coolant level shutdown prevents overheating (standard on radiator models only).
  - Integral vibration isolation eliminates the need for under-unit vibration spring isolators.

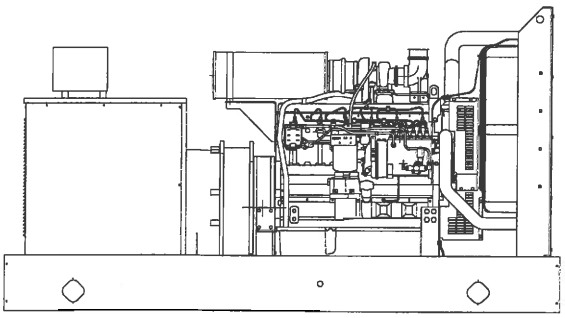

RATINGS: All three-phase units are rated at 0.8 power factor. All single-phase units are rated at 1.0 power factor. *Standby Ratings:* Standby ratings apply to installations served by a reliable utility source. The standby rating is applicable to varying loads for the duration of a power outage. There is no overload capability for this rating. Ratings are in accordance with ISO-3046/1, BS 5514, AS 2789, and DIN 6271. *Prime Power Ratings:* Prime power ratings apply to installations where utility power is unavailable or unreliable. At varying load, the number of generator set operating hours is unlimited. A 10% overload capacity is available for one hour in twelve. Ratings are in accordance with ISO-8528/1, overload power in accordance with ISO-3046/1, BS 5514, AS 2789, and DIN 6271. For limited running time and base load ratings, consult the factory. Obtain the technical information bulletin (TIB-101) on ratings guidelines for the complete ratings definitions. The generator set manufacturer reserves the right to change the design or specifications without notice and without any obligation or liability whatsoever. GENERAL GUIDELINES FOR DERATION: *Altitude:* Derate 1.3% per 100 m (328 ft.) elevation above 1500 m (5000 ft.). *Temperature:* Derate 1.0% per 10°C (18°F) temperature above 25°C (77°F).

Alternator Specifications

Specifications	Alternator
Manufacturer	Kohler
Type	4-Pole, Rotating-Field
Exciter type	Brushless, Permanent-Magnet
Leads: quantity, type	12, Reconnectable
Voltage regulator	Solid State, Volts/Hz
Insulation:	NEMA MG1
Material	Class H
Temperature rise	130°C, Standby
Bearing: quantity, type	1, Sealed
Coupling	Flexible Disc
Amortisseur windings	Full
Voltage regulation, no-load to full-load	
Permanent magnet (PM) alternator	±2% Average
550 controller (with 0.5% drift due to temperature variation)	3-Phase Sensing, ±0.25%
One-step load acceptance	100% of Rating
Unbalanced load capability	100% of Rated Standby Current
Peak motor starting kVA:	(35% dip for voltages below)
480 V, 380 V 4UA10 (12 lead)	785 (60 Hz), 540 (50 Hz)
480 V, 380 V 4UA13 (12 lead)	980 (60 Hz), 600 (50 Hz)

- NEMA MG1, IEEE, and ANSI standards compliance for temperature rise and motor starting.
- Sustained short-circuit current of up to 300% of the rated current for up to 10 seconds.
- Sustained short-circuit current enabling downstream circuit breakers to trip without collapsing the alternator field.
- Self-ventilated and dripproof construction.
- Vacuum-impregnated windings with fungus-resistant epoxy varnish for dependability and long life.
- Superior voltage waveform from a two-thirds pitch stator and skewed rotor.
- Fast-Response™ II brushless alternator with brushless exciter for excellent load response.

Application Data

Engine

Engine Specifications	60 Hz	50 Hz
Manufacturer	John Deere	
Engine model	6081AF001, 4-Cycle Turbocharged, Aftercooled	
Cylinder arrangement	6 Inline	
Displacement, L (cu. in.)	8.1 (496)	
Bore and stroke, mm (in.)	116 x 128 (4.56 x 5.06)	
Compression ratio	16.5:1	
Piston speed, m/min. (ft./min.)	463 (1518)	386 (1265)
Main bearings: quantity, type	7, Replaceable Insert	
Rated rpm	1800	1500
Max. power at rated rpm, kWm (BHP)	259 (347)	225 (302)
Cylinder head material	Cast Iron	
Crankshaft material	Forged Steel	
Valve material:		
Intake	Chromium-Silicon Steel	
Exhaust	Stainless Steel	
Governor: type, make/model	Mechanical, Robert Bosch P3000	
Frequency regulation, no-load to full-load	5%	
Frequency regulation, steady state	±0.33% (mech. governor) ±0.25% (elect. isoch. gov.)	
Frequency	Fixed	
Air cleaner type, all models	Dry	

Exhaust

Exhaust System	60 Hz	50 Hz
Exhaust manifold type	Dry	
Exhaust flow at rated kW, m^3/min. (cfm)	52 (1840)	41 (1451)
Exhaust temperature at rated kW, dry exhaust, °C (°F)	494 (922)	529 (985)
Maximum allowable back pressure, kPa (in. Hg)	7.5 (2.2)	
Exhaust outlet size at engine hookup, mm (in.)	101.6 (4.0)	

Engine Electrical

Engine Electrical System	60 Hz	50 Hz
Battery charging alternator:	24 Volt	
Ground (negative/positive)	Negative	
Volts (DC)	24	
Ampere rating	40	
Starter motor rated voltage (DC)	24	
Battery, recommended cold cranking amps (CCA):		
Quantity, CCA rating each	Two, 570	
Battery voltage (DC)	12	

Fuel

Fuel System	60 Hz	50 Hz
Fuel supply line, min. ID, mm (in.)	11.0 (0.44)	
Fuel return line, min. ID, mm (in.)	6.0 (0.25)	
Max. lift, fuel pump: type, m (ft.)	Engine-Driven, 3.0 (10.0)	
Max. fuel flow, Lph (gph)	255 (67.4)	205 (54.2)
Fuel prime pump	Manual	
Fuel filter		
Secondary	8 Microns @ 98% Efficiency	
Water Separator	Yes	
Recommended fuel	#2 Diesel	

Lubrication

Lubricating System	60 Hz	50 Hz
Type	Full Pressure	
Oil pan capacity, L (qt.)	31 (32.75)	
Oil pan capacity with filter, L (qt.)	32 (33.75)	
Oil filter: quantity, type	1, Cartridge	
Oil cooler	Water-Cooled	

Application Data

Cooling

Radiator System	60 Hz	50 Hz
Ambient temperature, °C (°F)*	50 (122)	
Engine jacket water capacity, L (gal.)	14.4 (3.8)	
Radiator system capacity, including engine, L (gal.)	39.7 (10.5)	
Engine jacket water flow, Lpm (gpm)	285 (75)	210 (55)
Heat rejected to cooling water at rated kW, dry exhaust, kW (Btu/min.)	143.5 (8160)	128.7 (7320)
Water pump type	Centrifugal	
Fan diameter, including blades, mm (in.)	660 (26)	
Fan, kWm (HP)	16.0 (21.4)	8.2 (11.0)
Max. restriction of cooling air, intake and discharge side of radiator, kPa (in. H_2O)	0.125 (0.5)	

* Enclosure with enclosed silencer reduces ambient temperature capability by 10°C (18°F).

Remote Radiator System†	60 Hz	50 Hz
Exhaust manifold type	Dry	
Connection sizes:		
Water inlet, ID hose, mm (in.)	51 (2.0)	
Water outlet, ID hose, mm (in.)	64 (2.5)	
Static head allowable above engine, kPa (ft. H_2O)	63 (21)	

† Contact your local distributor for cooling system options and specifications based on your specific application.

Operation Requirements

Air Requirements	60 Hz	50 Hz
Radiator-cooled cooling air, m^3/min. (scfm)‡	312 (11000)	272 (9600)
Cooling air required for generator set when equipped with city water cooling or remote radiator, based on 14°C (25°F) rise and ambient temp. of 29°C (85°F), m^3/min. (cfm)	246 (8700)	215 (7600)
Combustion air, m^3/min. (cfm)	21.5 (760)	14.7 (520)
Heat rejected to ambient air:		
Engine, kW (Btu/min.)	52.7 (3000)	43.9 (2500)
Alternator, kW (Btu/min.)	17.2 (980)	16.9 (960)

‡ Air density = 1.20 kg/m^3 (0.075 lbm/ft^3)

Fuel Consumption	60 Hz	50 Hz
Diesel, Lph (gph) at % load	**Standby Rating**	
100%	63.1 (16.7)	52.7 (13.9)
75%	46.7 (12.3)	39.8 (10.5)
50%	32.7 (8.6)	27.2 (7.2)
25%	19.5 (5.2)	14.7 (3.9)
Diesel, Lph (gph) at % load	**Prime Rating**	
100%	52.9 (14.0)	44.3 (11.7)
75%	38.6 (10.2)	33.6 (8.9)
50%	27.2 (7.2)	23.1 (6.1)
25%	16.8 (4.4)	12.6 (3.3)

Controllers

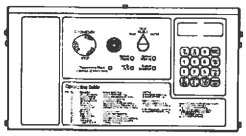

Decision-Maker™ 550 Controller
Audiovisual annunciation with NFPA 110 Level 1 capability.
Programmable microprocessor logic and digital display features.
Alternator safeguard circuit protection.
12- or 24-volt engine electrical system capability.
Remote start, remote annunciation, and remote communication options.
Refer to G6-46 for additional controller features and accessories.

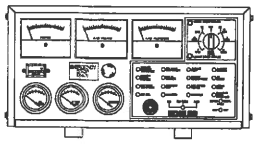

Decision-Maker™ 3+, 16-Light Controller
Audiovisual annunciation with NFPA 110 Level 1 capability.
Microprocessor logic, AC meters, and engine gauge features.
12- or 24-volt engine electrical system capability.
Remote start, prime power, and remote annunciation options.
Refer to G6-30 for additional controller features and accessories.

KOHLER CO., Kohler, Wisconsin 53044 USA
Phone 920-565-3381, Fax 920-459-1646
For the nearest sales and service outlet in the
US and Canada, phone 1-800-544-2444
KohlerPower.com

Kohler Power Systems
Asia Pacific Headquarters
7 Jurong Pier Road
Singapore 619159
Phone (65) 6264-6422, Fax (65) 6264-6455

Additional Standard Features

- Alternator Protection (standard with 550 controller)
- Battery Rack and Cables
- Integral Vibration Isolation
- Oil Drain Extension
- Operation and Installation Literature

Available Accessories

Enclosed Unit

- ❑ Sound Enclosure (with enclosed critical silencer)
- ❑ Weather Enclosure (with enclosed critical silencer)
- ❑ Weather Housing (with roof-mounted critical silencer)

Open Unit

- ❑ Exhaust Silencer, Critical (kit: PA-354809)
- ❑ Exhaust Silencer, Hospital (kit: PA-365349)
- ❑ Flexible Exhaust Connector, Stainless Steel

Cooling System

- ❑ Block Heater (recommended for ambient temperatures below 0°C [32°F])
- ❑ City Water Cooling
- ❑ Radiator Duct Flange
- ❑ Remote Radiator Cooling

Fuel System

- ❑ Auxiliary Fuel Pump
- ❑ Flexible Fuel Lines
- ❑ Fuel Pressure Gauge
- ❑ Subbase Fuel Tanks
- ❑ Subbase Fuel Tank with Day Tank

Electrical System

- ❑ Battery
- ❑ Battery Charger, Equalize/Float Type
- ❑ Battery Heater

Engine and Alternator

- ❑ Air Cleaner, Heavy Duty
- ❑ Air Cleaner Restriction Indicator
- ❑ Alternator Strip Heater
- ❑ Bus Bar Kits
- ❑ CSA Certification
- ❑ Current Transformer Kit
- ❑ Electronic Isochronous Governor (±0.25% freq. reg. steady state)
- ❑ Line Circuit Breaker (NEMA type 1 enclosure)
- ❑ Line Circuit Breaker with Shunt Trip (NEMA type 1 enclosure)
- ❑ Optional Alternators
- ❑ Rated Power Factor Testing
- ❑ Rodent Guards
- ❑ Safeguard Breaker (not available with 550 controller)
- ❑ Skid End Caps
- ❑ Voltage Regulation, 1%
- ❑ Voltage Regulator Sensing, 3-Phase

Paralleling System

- ❑ Reactive Droop Compensator
- ❑ Voltage Adjust Control
- ❑ Voltage Regulator Relocation Kit

Maintenance

- ❑ General Maintenance Literature Kit
- ❑ Maintenance Kit (includes standard air, oil, and fuel filters)
- ❑ NFPA 110 Literature
- ❑ Overhaul Literature Kit
- ❑ Production Literature Kit

Controller (550 and 16-Light Controllers)

- ❑ Common Failure Relay Kit
- ❑ Communication Products and PC Software (550 controller only)
- ❑ Customer Connection Kit
- ❑ Dry Contact Kit (isolated alarm)
- ❑ Engine Prealarm Sender Kit
- ❑ Prime Power Switch (550 controller only)
- ❑ Remote Annunciator Panel
- ❑ Remote Audiovisual Alarm Panel
- ❑ Remote Emergency Stop Kit
- ❑ Remote Mounting Cable
- ❑ Run Relay Kit

Miscellaneous Accessories

- ❑ _____
- ❑ _____
- ❑ _____
- ❑ _____

Dimensions and Weights

Overall Size, L x W x H, mm (in.):	2975 x 1250 x 1643 (117.13 x 49.21 x 64.68)
Weight (radiator model), wet, kg (lb.):	2121 (4675)

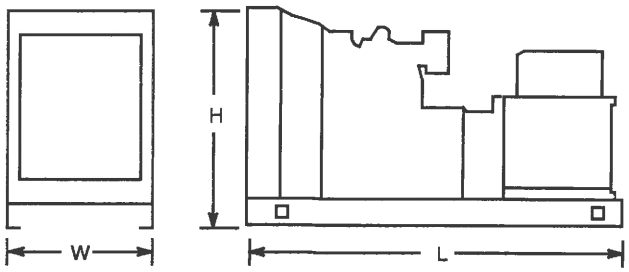

NOTE: This drawing is provided for reference only and should not be used for planning installation. Contact your local distributor for more detailed information.

DISTRIBUTED BY:

© 2001, 2002, 2003, 2004, 2005, 2006, 2008 by Kohler Co. All rights reserved.

Process Equipment	Description	Throughput Units	Pounds of Pollutant per Throughput Unit[1]				
			PM[2]	SO_2	NO_x	CO	VOC
Wood-Fired Boilers	Dutch Oven	1000 lb steam	0.4[3]	0.014	0.31[4]	3.0[4]	0.13
	Spreader-Stoker	1000 lb steam	0.4[3]	0.014	0.31[4]	2.0[4, 5]	0.13
	Fuel Cell	1000 lb steam	0.4[3]	0.014	0.31[4]	1.0[4, 6]	0.13
Veneer Dryer – Gas Heat	Doug Fir (uncontrolled)	1000 ft^2 (3/8" basis)	0.52	NA[7]	0.12	0.02	0.22
	Doug Fir (Burley or 45% control)	1000 ft^2 (3/8" basis)	0.29	NA	0.12	0.02	0.22
	Hemlock, White Fir (uncontrolled)	1000 ft^2 (3/8" basis)	0.15	NA	0.12	0.02	0.22
	Hemlock, White Fir (Burley or 45% control)	1000 ft^2 (3/8" basis)	0.10	NA	0.12	0.02	0.22
Veneer Dryer – Steam Heat	Doug Fir (uncontrolled)	1000 ft^2 (3/8" basis)	1.01	NA	NA	NA	0.04
	Doug Fir (Burley or 45% control)	1000 ft^2 (3/8" basis)	0.56	NA	NA	NA	0.04
	Hemlock, White Fir (uncontrolled)	1000 ft^2 (3/8" basis)	0.25	NA	NA	NA	0.04
	Hemlock, White Fir (Burley or 45% control)	1000 ft^2 (3/8" basis)	0.15	NA	NA	NA	0.04
Veneer Dryer – Wood Fired	All species (<20% moisture in fuel)	1000 ft^2 (3/8" basis)	0.75[8]	NA	0.4	1.4	0.2
	All species (≥20% moisture in fuel)	1000 ft^2 (3/8" basis)	1.50	NA	0.4	1.4	0.2
Cyclone- Dry and Green chips, Shavings, Hogged Fuel/Bark, Green Sawdust	Medium Efficiency	Bone dry tons	0.5	NA	NA	NA	NA
	High Efficiency	Bone dry tons	0.2	NA	NA	NA	NA
	Baghouse control	Bone dry tons	0.001	NA	NA	NA	NA
Cyclone - Sanderdust	High Efficiency	Bone dry tons	2.0	NA	NA	NA	NA
	Baghouse control	Bone dry tons	0.04	NA	NA	NA	NA
Target Box		Bone dry tons	0.1	NA	NA	NA	NA
Lumber Dry Kilns	Douglas Fir	1000 board feet	0.02[9]	NA	NA	NA	0.6
	Hemlock	1000 board feet	0.05[9]	NA	NA	NA	0.39[12]
	Ponderosa Pine	1000 board feet	ND[10]	NA	NA	NA	1.7[10]
Press Vents - uncontrolled	Particleboard	1000 ft^2 (3/4" basis)	SS[11]	NA	NA	NA	SS
	Hardboard	1000 ft^2 (1/8" basis)	SS	NA	NA	NA	SS

[1] The emissions factors listed in this table should only be used when better information (i.e., source test data) is not available.
[2] The PM_{10} and $PM_{2.5}$ fractions are dependent upon the type of control equipment. See AQ-EF03 for estimated PM_{10} and $PM_{2.5}$ fractions.
[3] The PM factors are equivalent to 0.1 gr/dscf at 65% boiler efficiency. For other allowable emissions concentrations, the emission factor may be ratioed (e.g., 0.2/0.1 gr/dscf x 0.40 = 0.80 lb/10^3 steam).
[4] These factors are based on collective source tests as of 1992.
[5] Spreader-Stokers with small combustion chambers may exhibit higher CO levels.
[6] Recent tests have shown CO levels in the range of 0.1 to 0.5.
[7] There is no applicable emission factor because the pollutant is either not emitted or emitted at negligible levels.
[8] Based on statewide rule limit.
[9] Based on OSU study (2000)
[10] No data available, but expected to be less than Douglas fir factor.
[11] Use source specific data because most plants have performed source testing.
[12] Based on OSU Study (2006)

RECEIVED
MAY 18 2012
DEPARTMENT OF ENVIRONMENTAL QUALITY
STATE A Q PROGRAM

RECEIVED
MAY 18 2012
DEQ
By R. Greenwood

woodgrain millwork

Tier I (Title V) Permit Renewal Application
Additional Information

Permit T1--060054

Facility #075-00001

March 15, 2012

The methods used for determining compliance status, including applicable monitoring, recordkeeping, reporting or test methods were included with the initial operating permit application submittal, are still current and applicable. Woodgrain is in compliance with all applicable requirements affecting the facility as a whole as well as the specific emission units located at the facility, therefore a compliance schedule is not required with this application. Woodgrain will continue to be in compliance with applicable requirements, for which it is in compliance, and will, in a timely manner or at such a schedule expressly required by the applicable requirement, meet additional applicable requirements that become effective during the permit term.

The submittal of compliance certifications during the five-year term of the operating permit will continue to occur semi-annually and annually within 30 days of the end of the specified reporting period.

Certification of Truth, Accuracy, and Completeness (by Responsible Official).

I certify that, based on information and belief formed after reasonable inquire, the statements and information in this document are true, accurate, and comp

Phil Steklenski
Name

Vice President - Millwork Division
Title

Signature

May 15, 2012
Date

RECEIVED
MAY 18 2012
DEQ
By R. Greenwood

The first bullet in the request for additional information states the following:

> The following MACTs apply to Woodgrain: 40 CFR 63 Subpart QQQQ (National Emission Standards for Hazardous Air Pollutant: Surface Coating of Wood Building Products) and 40 CFR 63 Subpart KK (National Emission Standards for the Printing and Publishing Industry. Submit the FRA (Federal Regulation Applicability) forms for the applicable MACTs.

Woodgrain has provided applicability information in previous applications and worked closely with the previous permit engineering during the Tier I and II process to outline the appropriate methodologies. Please find included with this submittal the requested FRA forms for subparts QQQQ and KK. Included with the FRA forms are examples of the reporting that Woodgrain has been compliant with during the past permit term.

The second bullet in the request for additional information states the following:

> Submit the emission inventory for the greenhouse gases (GHG) from all sources existing at the facility (i.e., combustion sources). The GHG includes mainly carbon dioxide (CO_2), methane (CH_4), nitrous oxide (N_2O) emissions, etc. These gases are called the CO_2 equivalent (CO_2e.)

The only sources at the Fruitland Woodgrain facility that emit GHGs are the various heaters and ovens. Cumulatively these sources are insignificant, however to assure complete emission inventories, Woodgrain includes these emissions in it's annual Emission Inventory. Please see below the amended table which now includes the requested information.

BURNER and OVEN EMISSIONS
PM, PM 10, SOX, CO, NOX, CO2e

Process Name	Em. Point	Bldg No.	Throughput (annual)	EFs Units	PM t/yr	PM 10 t/yr	CO t/yr	NOx t/yr	SO2 t/yr	CO2 t/yr	Methane t/yr	N2O t/yr	VOC t/yr
2 N.G. ovens (prime B1&2)	P 9	3	5.7537	lb/10^6 ft^3	0.0219	0.0219	0.2417	0.2877	0.0017	345.2	0.007	0.006	0.015823
North RF oven (B3)	P 28	2	3.869	lb/10^6 ft^3	0.0147	0.0147	0.1625	0.1935	0.0012	232.2	0.004	0.004	0.010641
South RF oven (B4)	P 29	2	1.593	lb/10^6 ft^3	0.0061	0.0061	0.0669	0.0797	0.0005	95.6	0.002	0.002	0.004381
Sum B3 & B4			5.4626		0.0208	0.0208	0.2294	0.2731	0.0016	327.8	0.006	0.006	0.0150
Buckley 5 hd printer (B5)	P 36	1	0.341	lb/10^6 ft^3	0.00130	0.00130	0.0143	0.0171	0.0001	20.5	0.000	0.000	0.000939
				Totals	**0.06468**	**0.06468**	**0.71485**	**0.85102**	**0.00511**	**1021**	**0.020**	**0.019**	**0.04681**

Pollutant	Emission Factor	EF Units	Reference
PM	7.6	lb/10^6 cft	AP 42 Table 1.4-2 Condensable plus filterable
PM 10	7.6	lb/10^6 cft	AP 42 Table 1.4-2 Condensable plus filterable
CO	84	lb/10^6 cft	AP 42 Table 1.4-1, small and uncontrolled
NOx	100	lb/10^6 cft	AP 42 Table 1.4-1, small and uncontrolled
SO2	0.6	lb/10^6 cft	AP 42 Table 1.4-2
CO2	120000	lb/10^6 cft	AP 42 Table 1.4-3
Methane	2.3	lb/10^6 cft	AP 42 Table 1.4-4
N20	2.2	lb/10^6 cft	AP 42 Table 1.4-4
N2O	5.5	lb/10^6 cft	AP 42 Table 1.4-2

The third bullet in the request for additional information states the following:

> Submit a detail process description for each emissions unit existing at the facility. The process description must include the quantities of the material input and material output for each process. Also describe and identify all emissions of pollutants (criteria air pollutants, TAPs, HAPs) from each emissions unit associated with each process (IDAPA 58.01.01.314.04).

Table 1.1 in the Tier I permit (shown below) lists all the emission units at the facility. The previous application included Baghouse N, which is a single source baghouse located inside and exhausting inside the building. The emissions from Baghouse N are 0.0001 tons per year PM10, well below regulatory concern. For that reason it was not included in the Tier I or II permits. It has been removed from this submittal.

Table 1.1 REGULATED SOURCES

Permit Condition	Source Description	Emissions Control(s)
3	Millwork Cyclone B	None
3	Millwork Cyclone C	None
3	Millwork Cyclone I	None
3	Millwork Baghouse G	None
3	Millwork Baghouse E	None
3	Millwork Cyclone J	None
3	Millwork Cyclone K	None
3	Millwork Baghouse L	None
3	Millwork/Optimizing Baghouse M	None
3	Millwork Cyclone D	None
3	Decramold Cyclone H	None
4	Coating and Gluing	None
5	Printing	None

Table 3.3 in the original application and reshown below shows the input and output of each of the particulate process emission units at the facility. The input into each unit is shown in the throughput column. As shown in the in original application the amount of material PM10 or smaller is very small. (See Cyclone Particulate Sizing report). Thus of the over 26,000 annual tons of material input only 4.61 tons is emitted as TSP, PM10, and PM2.5 combined.

3.3 Particulate Emissions

PARTICULATE	Em. Point	Bldg No.	PM Em. Factor	PM 10 Em. Factor	EFs Units	Throughput (annual)	Units Bone Dry Tons (BDT)	Particulate Emissions total (tons/yr)	PM10 Emissions total (tons/yr)
Cyclone B	P 6	NA	0.9	0.6	lb/BDT	605	BDT	0.27	0.181
Cyclone F Closed	P 7	NA	0	0	lb/BDT	1,043	BDT	0.00	0.000
Cyclone C	P 8	NA	0.9	0.6	lb/BDT	417	BDT	0.19	0.125
Cyclone I	P 10	NA	0.9	0.6	lb/BDT	1,500	BDT	0.68	0.450
Baghouse G	P 11	NA	0.001	0.001	lb/BDT	341	BDT	0.0002	0.000
Baghouse E	P 12	NA	0.001	0.001	lb/BDT	2,257	BDT	0.0011	0.001
Cyclone H (closed)	P 14	NA	0	0	lb/BDT	1,500	BDT	0.00	0.000
Cyclone J	P 17	NA	0.9	0.6	lb/BDT	3,836	BDT	1.73	1.151
Cyclone K	P 18	NA	0.9	0.6	lb/BDT	3,836	BDT	1.73	1.151
Baghouse L	P 19	NA	0.001	0.001	lb/BDT	5,179	BDT	0.003	0.003
Baghouse M	P 20	NA	0.001	0.001	lb/BDT	6,585	BDT	0.003	0.003
Cyclone M1 (closed)	P 21	NA	0	0	lb/BDT	7,673	BDT	0.00	0.000
Cyclone M2 (closed)	P 22	NA	0	0	lb/BDT	11,764	BDT	0.00	0.000
Cyclone M4 (high-closed)	P 23	NA	0	0	lb/BDT	8,407	BDT	0.00	0.000
Cyclone M3 (closed)	P 24	NA	0	0	lb/BDT	171	BDT	0.00	0.000
Cyclone D	P 35	NA	0.9	0.6	lb/BDT	21	BDT	0.01	0.006
						26,577	Total	**4.61**	**3.07**

Emission factors for Cyclones are Department approved site specific as developed in the document *"Fruitland Idaho Facility Cyclone Particle Size Distribution And Cyclone Emission Factor Determination"* submitted on April 23, 2004 and approved by the Department on May 19, 2004.

Emission factors for baghouses are consistent with emission factors for the wood products industry as developed by the Oregon Department of Environmental Quality.

Below is a description of each of the regulated emission units at the facility

Cyclone B is a process cyclone collecting shavings from moulders, tenoners, and saws. The shavings collected are packaged and sold as animal bedding. Input in this process is 605 BDT/year.

Cyclone C is a process cyclone collecting shavings from resaws, tenoners, and moulders. The shavings collected are packaged and sold as animal bedding. Input in this process is 417 BDT/year.

Cyclone I is a process cyclone collecting shavings from moulders, tenoners, core machines and shapers. The shavings collected are packaged and sold as animal bedding. Input in this process is 1,500 BDT/year.

Cyclone J is a process cyclone collecting shavings from moulders, and core machines. The shavings collected are packaged and sold as animal bedding. Input in this process is 3,836 BDT/year.

Cyclone K is a process cyclone collecting shavings from resaws, moulders, and core machines. The shavings collected are packaged and sold as animal bedding. Input in this process is 3,836 BDT/year.

Cyclone D is a process cyclone collecting shavings from resaws, tenoners, moulders, and core machines. The shavings collected are packaged and sold as animal bedding. Input in this process is 21 BDT/year.

Baghouse E is a process baghouse collecting shavings from moulders, tenoners, ripsaws, resaws, core machines, and shapers. The collected shavings are packaged and sold as animal bedding or sold to be used as filler in composite materials. Input into this process is 2,257 BDT/year.

Baghouse G is a process baghouse collecting shavings from moulders and tenoners. The collected shavings are packaged and sold as animal bedding or sold to be used as filler in composite materials. Input into this process is 341 BDT/year.

Baghouse L is a process baghouse collecting shavings from ripsaws, resaws, fingerjointers, backrips and cutlines. The collected shavings are packaged and sold as animal bedding or sold to be used as filler in composite materials. Input into this process is 5,179 BDT/year.

Baghouse M is a process baghouse collecting shavings from ripsaws, resaws, fingerjointers, backrips animal bedding, and cutlines. The collected shavings are packaged and sold as animal bedding or sold to be used as filler in composite materials. Input into this process is 6,585 BDT/year.

Coatings and Glueing

Woodgrain uses glues to join fingerjointed lumber to make long linier pieces, edge glue lumber to make door cores and apply simulated wood paper coatings. The glues are all water based glues and used throughout the facility without any collection systems.

Woodgrain prefinishes mouldings, doors and window parts, using near HAPs free solvent based paints and stains. Coatings are applied in a combination of flow coating booths and spray booths.

Flow coating booths use a gentle laminar flow of coatings to create a fan of paint that mouldings pass through to be painted. The mouldings dry and cure in various areas throughout the facility.

Window parts are treated using a WDMA approved treatment material, which uses mineral spirits as the transfer medium. Treated window parts cure throughout the facility.

Printing:

Woodgrain operates various printing presses, which print simulated wood grains onto substrates.

Facility Wide VOC emissions:

Due to the nature of the painting, coating, and printing processes Woodgrain has a facility Wide VOC Limit of 813 tons/year. Previous Tier I and Tier II applications provided the details of the VOC emissions at the facility. Woodgrain has requested and continues to request HAP limits of 25 tpy aggregate and 10 tpy individual HAPs. Woodgrain has been operating as minor source of HAPs since 2004. Included in this submittal is detailed facility wide chemical usage and composition as an example of the detail that Woodgrain maintains while tracking emissions.

The 4th bullet in the request for additional information states the following:

> Provide compliance certifications regarding the compliance status of each emissions unit at the time the application is submitted to DEQ, in accordance with IDAPA 58.01.01.314.09.

Please see included with this response DEQ Form AQ-C2 which Woodgrain is using to provide the requested compliance certification. Woodgrain has been in compliance with all permit requirements during this permit term.

The 5th bullet in the request for additional information states the following:

> Provide a compliance plans in accordance with IDAPA 58.01.01.314.10.

As stated in the past bullet Woodgrain is in compliance with all permit terms. Woodgrain has no intentions of operating out of compliance. Please see DEQ Form AQ-C2, which Woodgrain is using to show how it intends to comply with permit requirements on an ongoing basis.

The 6th bullet in the request for additional information states the following:

> Some emissions units at the facility maybe subject to CAM (Compliance Assurance Monitoring). Refer to 40 CFR 64. If any of the emissions units at the facility is subject to CAM, please fill in Form CAM provided in the above link from DEQ website (see bullet number one.)

After reviewing 40 CFR 64, Woodgrain has determined that none of its emissions units are subject CAM. Woodgrain does not have any emission limitations that are dependent on control equipment.

The 7th bullet in the request for additional information states the following:

> Form BCE is not complete for two baghouses. Please fill in the needed information in the form. Also the information about the baghouse manufacturers and the model numbers is required. Further, the application lists five baghouses exist at the facility, however, the Tier I Operating Permit No. T1-060054, issued on July 6, 2007 lists four baghouse (G, E, L, & M) are permitted. Please clarify this in your resubmittal.

The previous application included Baghouse N, which is a local control small baghouse, located inside. The emissions from Baghouse N are 0.0001 tons per year PM10, well below regulatory concern. For that reason it was not included in the Tier I or II permits. It has been removed from this submittal.

The 8th bullet in the request for additional information states the following:

> Please be aware that if any emergency generator engine exits at the facility, it is the permittee's responsibility to address that in the renewed TV application the applicable requirements that may apply to such engines. The applicable requirements that may apply to such engine include, but not limited to, the MACT Subpart ZZZZ and the NSPS Subpart IIII. If any of such subparts applies, please submit the required FRA form for the applicable subpart.

Woodgrain does have a small less than 500 hp emergency compression ignition generator, which is operated less than 500 hours per year. This emergency generator is subject to NSPS 40 CFR 63 Subpart ZZZZ. FRA Form is included.

DEQ AIR QUALITY PROGRAM
1410 N. Hilton, Boise, ID 83706
For assistance, call the
Air Permit Hotline – 1-877-5PERMIT

AIR PERMIT APPLICATION

Revision 6
10/7/09

For each box in the table below, CTRL+click on the blue underlined text for instructions and information.

IDENTIFICATION	
1. Company Name: Woodgrain Millwork Inc.	2. Facility Name: Fruitland Facility
3. Brief Project Description: Tier I (Title V) Permit Renewal Application - Permit T1-060054 Facility #075-00001	

APPLICABILITY DETERMINATION	
4. List applicable subparts of the New Source Performance Standards (NSPS) (40 CFR part 60). Examples of NSPS affected emissions units include internal combustion engines, boilers, turbines, etc. The applicant must thoroughly review the list of affected emissions units.	List of applicable subpart(s): None ☐ Not Applicable
5. List applicable subpart(s) of the National Emission Standards for Hazardous Air Pollutants (NESHAP) found in 40 CFR part 61 and 40 CFR part 63. Examples of affected emission units include solvent cleaning operations, industrial cooling towers, paint stripping and miscellaneous surface coating. EPA has a web page dedicated to NESHAP that should be useful to applicants.	List of applicable subpart(s): 40 CFR 63 Subpart QQQQ DEQ has already Completed regulatory Review for these Subparts in the previous Tier I and Tier II Permits. Listed below highlighted are the sections applicable to Woodgrain. See Example of Semi-annual reporting which Woodgrain has been compliant with. ☐ Not Applicable
6. For each subpart identified above, conduct a complete a regulatory analysis using the instructions and referencing the example provided on the following pages. **Note** - Regulatory reviews must be submitted with sufficient detail so that DEQ can verify applicability and document in legal terms why the regulation applies. Regulatory reviews that are submitted with insufficient detail will be determined incomplete.	☐ A detailed regulatory review is provided (Follow instructions and example). ☐ DEQ has already been provided a detailed regulatory review. Give a reference to the document including the date.

IF YOU ARE UNSURE HOW TO ANSWER ANY OF THESE QUESTIONS, CALL THE AIR PERMIT HOTLINE AT 1-877-5PERMIT

It is emphasized that it is the applicant's responsibility to satisfy all technical and regulatory requirements, and that DEQ will help the applicant understand what those requirements are prior to the application being submitted but that DEQ will not perform the required technical or regulatory analysis on the applicant's behalf.

Subpart QQQQ—National Emission Standards for Hazardous Air Pollutants: Surface Coating of Wood Building Products

Source: 68 FR 31760, May 28, 2003, unless otherwise noted.

What This Subpart Covers
§ 63.4680 What is the purpose of this subpart?

This subpart establishes national emission standards for hazardous air pollutants (NESHAP) for wood building products surface coating sources. This subpart also establishes requirements to demonstrate initial and continuous compliance with the emission limitations.

§ 63.4681 Am I subject to this subpart?

(a) Except as provided in paragraphs (c) and (d) of this section, the source category to which this subpart applies is surface coating of wood building products, which means the application of coatings using, for example, roll coaters or curtain coaters in the finishing or laminating of any wood building product that contains more than 50 percent by weight wood or wood fiber excluding the weight of any glass components, and is used in the construction, either interior or exterior, of a residential, commercial, or institutional building. The wood building products source category includes the subcategories listed in paragraphs (a)(1) through (5) of this section.

(1) *Doors, windows, and miscellaneous.* The doors, windows, and miscellaneous subcategory includes doors, windows, finished doorskins, and door and window components such as millwork, moulding, or trim, and other miscellaneous wood building products including, but not limited to, all moulding and trim, shingles, and shutters.

Woodgrain Produces Doors, Windows, and millwork/moulding/trim. Woodgrain is Subject to this NESHAP because it was a major source of HAPs at the time that this subpart was promulgated.

(2) *Flooring.* The flooring subcategory includes solid wood flooring, engineered wood flooring, and wood laminate flooring.

(3) *Interior wall paneling and tileboard.* The interior wall paneling and tileboard subcategory includes interior wall paneling products. Tileboard is a premium interior wall paneling product.

(4) *Other interior panels.* The other interior panel subcategory includes panels that are sold for uses other than interior wall paneling, such as coated particleboard, hardboard, and perforated panels.

(5) *Exterior siding and primed doorskins.* The exterior siding and primed doorskins subcategory includes lap or panel siding, trimboard, and primed doorskins. Doorskins that are coated with more than primer are included in the doors, windows, and miscellaneous subcategory.

(b) You are subject to this subpart if you own or operate a new, reconstructed, or existing affected source, as defined in §63.4682, that uses 4,170 liters (1,100 gallons) per year, or more, of coatings in the source category defined in paragraph (a) of this section and that is a major source, is located at a major source, or is part of a major source of emissions of hazardous air pollutants (HAP). A major source of HAP emissions is any stationary source or group of stationary sources located within a contiguous area and under common control that emits or has the potential to emit any single HAP at a rate of 9.07 megagrams (Mg) (10 tons) or more per year or any combination of HAP at a rate of 22.68 Mg (25 tons) or more per year.

(c) This subpart does not apply to surface coating and other operations that meet the criteria of paragraphs (c)(1) through (5) of this section.

(1) Surface coating in the processes identified in paragraphs (c)(1)(i) through (xi) of this section that are part of plywood and composite wood product manufacturing and would be subject to subpart DDDD of this part when promulgated:

(i) Edge seals applied to a reconstituted wood product or plywood.

(ii) Anti-skid coatings applied to reconstituted wood products.

(iii) Primers applied to waferboard or oriented strand board (OSB) siding at the site of manufacture of the waferboard or OSB siding.

(iv) Surface coating that occurs during the manufacture of fiberboard, including application of clay slurry, titanium dioxide, or asphalt coatings to fiberboard.

(v) Painting of company logo information on plywood or reconstituted wood products.

(vi) Application of trademarks and grade stamp to reconstituted wood products or plywood.

(vii) Application of nail lines to reconstituted wood products.

(viii) Synthetic patches, wood patches, and wood putty applied to plywood.

(ix) Application of concrete forming and other drying or tempering oils to wood building products.

(x) Veneer composing.

(xi) Application of shelving edge fillers to reconstituted wood products.

(2) Surface coating of wood furniture subject to subpart JJ of this part, including finishing, gluing, cleaning, and washoff operations associated with the production of wood furniture or wood furniture components. The surface coating of millwork and trim associated with cabinet manufacturing is also subject to subpart JJ of this part and not to this subpart.

(3) Surface coating that occurs during the manufacture of prefabricated homes and mobile/modular homes.

(4) Surface coating that occurs at research or laboratory facilities; janitorial, building, and facility construction or maintenance operations; or hobby shops that are operated for personal rather than for commercial purposes. The source category also does not include non-commercial coating operations or coating applications using handheld nonrefillable aerosol containers.

(5) Wood treatment or fire retardant operations located at wood building products sources that involve impregnating the wood product with the wood treatment chemicals or fire retardant by using a retort or other pressure vessel.

(d) If you have an affected source with surface coating operations subject to the requirements of another subpart of this part that account for at least 95 percent of the total (annual) coating usage for the affected source, you may demonstrate compliance with the requirements, including all applicable emission limit(s), for that subpart for the entire affected source.

§ 63.4682 What parts of my plant does this subpart cover?

(a) This subpart applies to each new, reconstructed, and existing affected source.

(b) The affected source is the collection of all of the items listed in paragraphs (b)(1) through (4) of this section that are used for surface coating of wood building products:

(1) All coating operations as defined in §63.4781;

(2) All storage containers and mixing vessels in which coatings, thinners, and cleaning materials are stored or mixed;

(3) All manual and automated equipment and containers used for conveying coatings, thinners, and cleaning materials; and

(4) All storage containers and all manual and automated equipment and containers used for conveying waste materials generated by a coating operation.

(c) An affected source is a new affected source if its construction commenced after June 21, 2002, and the construction is of a completely new wood building products surface coating source where previously no wood building products surface coating source had existed.

(d) An affected source is reconstructed if you meet the criteria as defined in §63.2.

(e) An affected source is existing if it is not new or reconstructed.

At the time of Promulgations Woodgrain was considered an existing affected source.

§ 63.4683 When do I have to comply with this subpart?

The date by which you must comply with this subpart is called the compliance date. The compliance date for each type of affected source is specified in paragraphs (a) through (c) of this section. The

compliance date begins the initial compliance period during which you conduct the initial compliance demonstration described in §§63.4740, 63.4750, and 63.4760.

(a) For a new or reconstructed affected source, the compliance date is the applicable date in paragraph (a)(1) or (2) of this section:

(1) If the initial startup of your new or reconstructed affected source is before May 28, 2003, the compliance date is May 28, 2003.

(2) If the initial startup of your new or reconstructed affected source occurs after May 28, 2003, the compliance date is the date of initial startup of your affected source.

(b) For an existing affected source, the compliance date is the date 3 years after May 28, 2003.

(c) For an area source that increases its emissions or its potential to emit such that it becomes a major source of HAP emissions, the compliance date is specified in paragraphs (c)(1) and (2) of this section.

(1) For any portion of the source that becomes a new or reconstructed affected source subject to this subpart, the compliance date is the date of initial startup of the affected source or May 28, 2003, whichever is later.

(2) For any portion of the source that becomes an existing affected source subject to this subpart, the compliance date is the date 1 year after the area source becomes a major source or 3 years after May 28, 2003, whichever is later.

(d) You must meet the notification requirements in §63.4710 according to the dates specified in that section and in subpart A of this part. Some of the notifications must be submitted before the compliance dates described in paragraphs (a) through (c) of this section.

Emission Limitations
§ 63.4690 What emission limits must I meet?

(a) For a new or reconstructed affected source, you must limit organic HAP emissions to the atmosphere to no more than the applicable emission limit(s) in Table 1 to this subpart, determined according to the requirements in §§63.4741, 63.4751, or 63.4761.

(b) For an existing affected source, you must limit organic HAP emissions to the atmosphere to no more than the applicable emission limit(s) in Table 2 to this subpart, determined according to the requirements in §63.4741, §63.4751, or §63.4761.

(c) If the affected source applies coatings to products that are in different subcategories as described in §63.4681(a), then you must demonstrate initial and continuous compliance by selecting one of the approaches described in paragraphs (c)(1) and (2) of this section.

(1) Conduct separate compliance demonstrations for each applicable subcategory emission limit and reflect these separate determinations in notifications, reports, and records required by §§63.4710, 63.4720, and 63.4730, respectively.

(2) Demonstrate compliance with the most stringent of the applicable subcategory emission limits.

§ 63.4691 What are my options for meeting the emission limits?

You must include all coatings, thinners, and cleaning materials used in the affected source when determining whether the organic HAP emission rate is equal to or less than the applicable emission limit in §63.4690. To make this determination, you must use at least one of the three compliance options listed in paragraphs (a) through (c) of this section. You may apply any of the compliance options to an individual coating operation or to multiple coating operations as a group or to the entire affected source. You may use different compliance options for different coating operations or at different times on the same coating operation. However, you may not use different compliance options at the same time on the same coating operation. If you switch between compliance options for any coating operation or group of coating operations, you must document this switch as required by §63.4730(c), and you must report it in the next semiannual compliance report required in §63.4720.

(a) *Compliant material option.* Demonstrate that the organic HAP content of each coating used in the coating operation(s) is less than or equal to the applicable emission limit(s) in §63.4690, and that each thinner and each cleaning material used contains no organic HAP. You must meet all the requirements of §§63.4740, 63.4741, and 63.4742 to demonstrate compliance with the emission limit using this option.

(b) Emission rate without add-on controls option. Demonstrate that, based on the coatings, thinners, and cleaning materials used in the coating operation(s), the organic HAP emission rate for the coating operation(s) is less than or equal to the applicable emission limit(s) in §63.4690, calculated as a rolling 12-month emission rate and determined on a monthly basis. You must meet all the requirements of §§63.4750, 63.4751, and 63.4752 to demonstrate compliance with the emission limit using this option.

Woodgrain has been using the Emission rate without add-on controls option and intends to continue using this option.

(c) *Emission rate with add-on controls option.* Demonstrate that, based on the coatings, thinners, and cleaning materials used in the coating operation(s) and the emission reductions achieved by emission capture systems and add-on controls, the organic HAP emission rate for the coating operation(s) is less than or equal to the applicable emission limit(s) in §63.4690, calculated as a rolling 12-month emission rate and determined on a monthly basis. If you use this compliance option, you must also demonstrate that all emission capture systems and add-on control devices for the coating operation(s) meet the operating limits required in §63.4692, except for solvent recovery systems for which you conduct liquid-liquid material balances according to §63.4761(j), and that you meet the work practice standards required in §63.4693. You must meet all the requirements of §§63.4760 through 63.4768 to demonstrate compliance with the emission limits, operating limits, and work practice standards using this option.

§ 63.4692 What operating limits must I meet?

(a) For any coating operation(s) on which you use the compliant material option or the emission rate without add-on controls option, you are not required to meet any operating limits.

(b) For any controlled coating operation(s) on which you use the emission rate with add-on controls option, except those for which you use a solvent recovery system and conduct a liquid-liquid material balance according to §63.4761(j), you must meet the operating limits specified in Table 3 to this subpart. These operating limits apply to the emission capture and control systems on the coating operation(s) for which you use this option, and you must establish the operating limits during the performance test according to the requirements in §63.4767. You must meet the operating limits at all times after you establish them.

(c) If you use an add-on control device other than those listed in Table 3 to this subpart, or wish to monitor an alternative parameter and comply with a different operating limit, you must apply to the Administrator for approval of alternative monitoring under §63.8(f).

§ 63.4693 What work practice standards must I meet?

(a) For any coating operation(s) on which you use the compliant material option or the emission rate without add-on controls option, you are not required to meet any work practice standards.

(b) If you use the emission rate with add-on controls option, you must develop and implement a work practice plan to minimize organic HAP emissions from the storage, mixing, and conveying of coatings, thinners, and cleaning materials used in, and waste materials generated by, the coating operation(s); or you must meet an alternative standard as provided in paragraph (d) of this section. The plan must specify practices and procedures to ensure that, at a minimum, the elements specified in paragraphs (b)(1) through (5) of this section are implemented. You must make the plan available upon request for inspection by the Administrator.

(1) All organic-HAP coatings, thinners, cleaning materials, and waste materials must be stored in closed containers.

(2) Spills of organic-HAP coatings, thinners, cleaning materials, and waste materials must be minimized.

(3) Organic-HAP coatings, thinners, cleaning materials, and waste materials must be conveyed from one location to another in closed containers or pipes.

(4) Mixing vessels that contain organic-HAP coatings and other materials must be closed except when adding to, removing, or mixing the contents.

(5) Emissions of organic-HAP must be minimized during cleaning of storage, mixing, and conveying equipment.

(c) If your affected source has an existing documented plan that incorporates steps taken to minimize emissions from the sources specified in paragraphs (b)(1) through (5) of this section, then your existing plan can be used to meet the requirement for a work practice plan as specified in paragraph (b) of this section.

(d) As provided in §63.6(g), we, the U.S. Environmental Protection Agency (U.S. EPA), may choose to grant you permission to use an alternative to the work practice standards in this section.

General Compliance Requirements

§ 63.4700 What are my general requirements for complying with this subpart?

(a) You must be in compliance with the emission limitations in this subpart as specified in paragraphs (a)(1) and (2) of this section.

(1) Any coating operation(s) for which you use the compliant material option or the emission rate without add-on controls option, as specified in §63.4691(a) and (b), must be in compliance with the applicable emission limit in §63.4690 at all times.

(2) Any coating operation(s) for which you use the emission rate with add-on controls option, as specified in §63.4691(c), must be in compliance with the emission limitations as specified in paragraphs (a)(2)(i) through (iii) of this section.

(i) The coating operation(s) must be in compliance with the applicable emission limit in §63.4690 at all times, except during periods of startup, shutdown, and malfunction (SSM).

(ii) The coating operation(s) must be in compliance with the operating limits for emission capture systems and add-on control devices required by §63.4692 at all times, except during periods of SSM, and except for solvent recovery systems for which you conduct liquid-liquid material balances according to §63.4761(j).

(iii) The coating operation(s) must be in compliance with the work practice standards in §63.4693 at all times.

(b) You must always operate and maintain your affected source, including all air pollution control and monitoring equipment you use for purposes of complying with this subpart, according to the provisions in §63.6(e)(1)(i).

(c) If your affected source uses an emission capture system and add-on control device, you must maintain a log detailing the operation and maintenance of the emission capture system, add-on control device, and continuous parameter monitors during the period between the compliance date specified for your affected source in §63.4683 and the date when the initial emission capture system and add-on control device performance tests have been completed, as specified in §63.4760. This requirement does not apply to a solvent recovery system for which you conduct liquid-liquid material balances according to §63.4761(j) in lieu of conducting performance tests.

(d) If your affected source uses an emission capture system and add-on control device, you must develop a written startup, shutdown, and malfunction plan (SSMP) according to the provisions in §63.6(e)(3). The SSMP must address startup, shutdown, and corrective actions in the event of a malfunction of the emission capture system or the add-on control device. The SSMP must also address any coating operation equipment that may cause increased emissions or that would affect capture efficiency if the process equipment malfunctions, such as conveyors that move parts among enclosures.

[68 FR 31760, May 28, 2003, as amended at 71 FR 20465, Apr. 20, 2006]

§ 63.4701 What parts of the General Provisions apply to me?

Table 4 to this subpart indicates which parts of the General Provisions in §§63.1 through 63.15 apply to you.

Notifications, Reports, and Records

§ 63.4710 What notifications must I submit?

(a) *General.* You must submit the notifications in §§63.7(b) and (c), 63.8(f)(4), and 63.9(b) through (e) and (h) that apply to you by the dates specified in those sections, except as provided in paragraphs (b) and (c) of this section.

(b) *Initial Notification.* You must submit the Initial Notification required by §63.9(b) for a new or reconstructed affected source no later than 120 days after initial startup or 120 days after May 28, 2003, whichever is later. For an existing affected source, you must submit the Initial Notification no later than 120 days after May 28, 2003.

(c) *Notification of Compliance Status.* You must submit the Notification of Compliance Status required by §63.9(h) no later than 30 calendar days following the end of the initial compliance period described in §63.4740, §63.4750, or §63.4760 that applies to your affected source. The Notification of Compliance Status must contain the information specified in paragraphs (c)(1) through (9) of this section and in §63.9(h).

(1) Company name and address.

(2) Statement by a responsible official with that official's name, title, and signature, certifying the truth, accuracy, and completeness of the content of the report.

(3) Date of the report and beginning and ending dates of the reporting period. The reporting period is the initial compliance period described in §63.4740, §63.4750, or §63.4760 that applies to your affected source.

(4) Identification of the compliance option or options specified in §63.4691 that you used on each coating operation in the affected source during the initial compliance period.

(5) Statement of whether or not the affected source achieved the emission limitations for the initial compliance period.

(6) If you had a deviation, include the information in paragraphs (c)(6)(i) and (ii) of this section.

(i) A description and statement of the cause of the deviation.

(ii) If you failed to meet the applicable emission limit in §63.4690, include all the calculations you used to determine the grams organic HAP emitted per liter of coating solids used (pounds (lb) organic HAP emitted per gallon of coating solids used). You do not need to submit information provided by the materials suppliers or manufacturers, or test reports.

(7) For each of the data items listed in paragraphs (c)(7)(i) through (iv) of this section that is required by the compliance option(s) you used to demonstrate compliance with the emission limit, include an example of how you determined the value, including calculations and supporting data. Supporting data can include a copy of the information provided by the supplier or manufacturer of the example coating or material or a summary of the results of testing conducted according to §63.4741(a), (b), or (c). You do not need to submit copies of any test reports.

(i) Mass fraction of organic HAP for one coating, for one thinner, and for one cleaning material.

(ii) Volume fraction of coating solids for one coating.

(iii) Density for one coating, one thinner, and one cleaning material, except that if you use the compliant material option, only the example coating density is required.

(iv) The amount of waste materials and the mass of organic HAP contained in the waste materials for which you are claiming an allowance in Equation 1 of §63.4751.

(8) The calculation of grams organic HAP emitted per liter coating solids used (lb organic HAP emitted per gallon coating solids used) for the compliance option(s) you used, as specified in paragraphs (c)(8)(i) through (iii) of this section.

(i) For the compliant material option, provide an example calculation of the organic HAP content for one coating, using Equation 2 of §63.4741.

(ii) For the emission rate without add-on controls option, provide the calculation of the total mass of organic HAP emissions for each month; the calculation of the total volume of coating solids used each month; and the calculation of the 12-month organic HAP emission rate, using Equations 1 and 1A through 1C, 2, and 3, respectively, of §63.4751.

(iii) For the emission rate with add-on controls option, provide the calculation of the total mass of organic HAP emissions for the coatings, thinners, and cleaning materials used each month, using Equations 1 and 1A through 1C of §63.4751; the calculation of the total volume of coating solids used each month, using Equation 2 of §63.4751; the calculation of the mass of organic HAP emission reduction each month by emission capture systems and add-on control devices, using Equations 1, 1A through 1D, 2, 3, and 3A through 3C of §63.4761, as applicable; the calculation of the total mass of organic HAP emissions each month, using Equation 4 of §63.4761; and the calculation of the 12-month organic HAP emission rate, using Equation 5 of §63.4761.

(9) For the emission rate with add-on controls option, you must include the information specified in paragraphs (c)(9)(i) through (iv) of this section, except that the requirements in paragraphs (c)(9)(i) through (iii) of this section do not apply to solvent recovery systems for which you conduct liquid-liquid material balances according to §63.4761(j).

(i) For each emission capture system, a summary of the data and copies of the calculations supporting the determination that the emission capture system is a permanent total enclosure (PTE) or a measurement of the emission capture system efficiency. Include a description of the protocol followed for measuring capture efficiency, summaries of any capture efficiency tests conducted, and any calculations supporting the capture efficiency determination. If you use the data quality objective (DQO) or lower confidence limit (LCL) approach, you must also include the statistical calculations to show you meet the DQO or LCL criteria in appendix A to subpart KK of this part. You do not need to submit complete test reports.

(ii) A summary of the results of each add-on control device performance test. You do not need to submit complete test reports.

(iii) A list of each emission capture system and add-on control device operating limits and a summary of the data used to calculate those limits.

(iv) A statement of whether or not you developed and implemented the work practice plan required by §63.4693.

§ 63.4720 What reports must I submit?

(a) *Semiannual compliance reports.* You must submit semiannual compliance reports for each affected source according to the requirements of paragraphs (a)(1) through (7) of this section. The semiannual compliance reporting requirements may be satisfied by reports required under other parts of the Clean Air Act (CAA), as specified in paragraph (a)(2) of this section.

(1) *Dates.* Unless the Administrator has approved a different schedule for submission of reports under §63.10(a), you must prepare and submit each semiannual compliance report according to the dates specified in paragraphs (a)(1)(i) through (iv) of this section. Note that the information reported for each of the months in the reporting period will be based on the last 12 months of data prior to the date of each monthly calculation.

(i) The first semiannual compliance report must cover the first semiannual reporting period which begins the day after the end of the initial compliance period described in §63.4740, §63.4750, or §63.4760 that applies to your affected source and ends on June 30 or December 31, whichever occurs first following the end of the initial compliance period.

(ii) Each subsequent semiannual compliance report must cover the subsequent semiannual reporting period from January 1 through June 30 or the semiannual reporting period from July 1 through December 31.

(iii) Each semiannual compliance report must be postmarked or delivered no later than July 31 or January 31, whichever date is the first date following the end of the semiannual reporting period.

(iv) For each affected source that is subject to permitting regulations pursuant to 40 CFR part 70 or 40 CFR part 71, and if the permitting authority has established dates for submitting semiannual reports pursuant to 40 CFR 70.6(a)(3)(iii)(A) or 40 CFR 71.6(a)(3)(iii)(A), you may submit the first and subsequent compliance reports according to the dates the permitting authority has established instead of according to the date specified in paragraph (a)(1)(iii) of this section.

(2) *Inclusion with title V report.* Each affected source that has obtained a title V operating permit pursuant to 40 CFR part 70 or 40 CFR part 71 must report all deviations as defined in this subpart in the semiannual monitoring report required by 40 CFR 70.6(a)(3)(iii)(A) or 40 CFR 71.6(a)(3)(iii)(A). If an affected source submits a semiannual compliance report pursuant to this section along with, or as part of, the semiannual monitoring report required by 40 CFR 70.6(a)(3)(iii)(A) or 40 CFR 71.6(a)(3)(iii)(A), and the semiannual compliance report includes all required information concerning deviations from any emission limitation in this subpart, its submission shall be deemed to satisfy any obligation to report the same deviations in the semiannual monitoring report. However, submission of a semiannual compliance report shall not otherwise affect any obligation the affected source may have to report deviations from permit requirements to the permitting authority.

(3) *General requirements.* The semiannual compliance report must contain the information specified in paragraphs (a)(3)(i) through (v) of this section, and the information specified in paragraphs (a)(4) through (7) and (c)(1) of this section that is applicable to your affected source.

(i) Company name and address.

(ii) Statement by a responsible official with that official's name, title, and signature, certifying the truth, accuracy, and completeness of the content of the report.

(iii) Date of report and beginning and ending dates of the reporting period. The reporting period is the 6-month period ending on June 30 or December 31. Note that the information reported for each of the 6 months in the reporting period will be based on the last 12 months of data prior to the date of each monthly calculation.

(iv) Identification of the compliance option or options specified in §63.4691 that you used on each coating operation during the reporting period. If you switched between compliance options during the reporting period, you must report the beginning and ending dates you used each option.

(v) If you used the emission rate without add-on controls or the emission rate with add-on controls compliance option (§63.4691(b) or (c)), the calculation results for each rolling 12-month organic HAP emission rate during the 6-month reporting period.

(4) *No deviations.* If there were no deviations from the emission limitations in §§63.4690, 63.4692, and 63.4693 that apply to you, the semiannual compliance report must include a statement that there were no deviations from the emission limitations during the reporting period. If you used the emission rate with add-on controls option and there were no periods during which the continuous parameter monitoring systems (CPMS) were out-of-control as specified in §63.8(c)(7), the semiannual compliance report must include a statement that there were no periods during which the CPMS were out-of-control during the reporting period.

(5) *Deviations: compliant material option.* If you used the compliant material option, and there was a deviation from the applicable emission limit in §63.4690, the semiannual compliance report must contain the information in paragraphs (a)(5)(i) through (iv) of this section.

(i) Identification of each coating used that deviated from the emission limit, each thinner and cleaning material used that contained organic HAP, and the dates and time periods each was used.

(ii) The calculation of the organic HAP content (using Equation 2 of §63.4741) for each coating identified in paragraph (a)(5)(i) of this section. You do not need to submit background data supporting this calculation (*e.g.,* information provided by coating suppliers or manufacturers, or test reports).

(iii) The determination of mass fraction of organic HAP for each coating, thinner, and cleaning material identified in paragraph (a)(5)(i) of this section. You do not need to submit background data supporting this calculation (*e.g.,* information provided by material suppliers or manufacturers, or test reports).

(iv) A statement of the cause of each deviation.

(6) *Deviations: emission rate without add-on controls option.* If you used the emission rate without add-on controls option and there was a deviation from the applicable emission limit in §63.4690, the semiannual compliance report must contain the information in paragraphs (a)(6)(i) through (iii) of this section.

(i) The beginning and ending dates of each compliance period during which the 12-month organic HAP emission rate exceeded the applicable emission limit in §63.4690.

(ii) The calculations used to determine the 12-month organic HAP emission rate for the compliance period in which the deviation occurred. You must provide the calculations for Equations 1, 1A through 1C, 2, and 3 in §63.4751; and if applicable, the calculation used to determine mass of organic HAP in waste materials according to §63.4751(e)(4). You do not need to submit background data supporting these calculations (*e.g.,* information provided by materials suppliers or manufacturers, or test reports).

(iii) A statement of the cause of each deviation.

(7) *Deviations: emission rate with add-on controls option.* If you used the emission rate with add-on controls option and there was a deviation from an emission limitation (including any periods when emissions bypassed the add-on control device and were diverted to the atmosphere), the semiannual compliance report must contain the information in paragraphs (a)(7)(i) through (xiv) of this section. This includes periods of SSM during which deviations occurred.

(i) The beginning and ending dates of each compliance period during which the 12-month organic HAP emission rate exceeded the applicable emission limit in §63.4690.

(ii) The calculations used to determine the 12-month organic HAP emission rate for each compliance period in which a deviation occurred. You must provide the calculation of the total mass of organic HAP emissions for the coatings, thinners, and cleaning materials used each month, using Equations 1 and 1A through 1C of §63.4751; and, if applicable, the calculation used to determine mass of organic HAP in waste materials according to §63.4751(e)(4); the calculation of the total volume of coating solids used each month, using Equation 2 of §63.4751; the calculation of the mass of organic HAP emission reduction each month by emission capture systems and add-on control devices, using Equations 1 and 1A through 1D of §63.4761, and Equations 2, 3, and 3A through 3C of §63.4761, as applicable; the calculation of the total mass of organic HAP emissions each month, using Equation 4 of §63.4761; and the calculation of the 12-month organic HAP emission rate, using Equation 5 of §63.4761. You do not need to submit the background data supporting these calculations (*e.g.,* information provided by materials suppliers or manufacturers, or test reports).

(iii) The date and time that each malfunction started and stopped.

(iv) A brief description of the CPMS.

(v) The date of the latest CPMS certification or audit.

(vi) The date and time that each CPMS was inoperative, except for zero (low-level) and high-level checks.

(vii) The date, time, and duration that each CPMS was out-of-control, including the information in §63.8(c)(8).

(viii) The date and time period of each deviation from an operating limit in Table 3 to this subpart, date and time period of any bypass of the add-on control device, and whether each deviation occurred during a period of SSM or during another period.

(ix) A summary of the total duration of each deviation from an operating limit in Table 3 to this subpart, each bypass of the add-on control device during the semiannual reporting period, and the total duration as a percent of the total source operating time during that semiannual reporting period.

(x) A breakdown of the total duration of the deviations from the operating limits in Table 3 to this subpart and bypasses of the add-on control device during the semiannual reporting period by identifying deviations due to startup, shutdown, control equipment problems, process problems, other known causes, and other unknown causes.

(xi) A summary of the total duration of CPMS downtime during the semiannual reporting period and the total duration of CPMS downtime as a percent of the total source operating time during that semiannual reporting period.

(xii) A description of any changes in the CPMS, coating operation, emission capture system, or add-on control device since the last semiannual reporting period.

(xiii) For each deviation from the work practice standards, a description of the deviation, the date and time period of the deviation, and the actions you took to correct the deviation.

(xiv) A statement of the cause of each deviation.

(b) *Performance test reports.* If you use the emission rate with add-on controls option, you must submit reports of performance test results for emission capture systems and add-on control devices no later than 60 days after completing the tests as specified in §63.10(d)(2).

(c) *SSM reports.* If you used the emission rate with add-on controls option and you had an SSM during the semiannual reporting period, you must submit the reports specified in paragraphs (c)(1) and (2) of this section.

(1) If your actions were consistent with your SSMP, you must include the information specified in §63.10(d) in the semiannual compliance report required by paragraph (a) of this section.

(2) If your actions were not consistent with your SSMP, you must submit an immediate SSM report as described in paragraphs (c)(2)(i) and (ii) of this section.

(i) You must describe the actions taken during the event in a report delivered by facsimile, telephone, or other means to the Administrator within 2 working days after starting actions that are inconsistent with the plan.

(ii) You must submit a letter to the Administrator within 7 working days after the end of the event, unless you have made alternative arrangements with the Administrator as specified in §63.10(d)(5)(ii). The letter must contain the information specified in §63.10(d)(5)(ii).

§ 63.4730 What records must I keep?

You must collect and keep records of the data and information specified in this section. Failure to collect and keep these records is a deviation from the applicable standard.

(a) A copy of each notification and report that you submitted to comply with this subpart, and the documentation supporting each notification and report.

(b) A current copy of information provided by materials suppliers or manufacturers, such as manufacturer's formulation data, or test data used to determine the mass fraction of organic HAP and density for each coating, thinner, and cleaning material and the volume fraction of coating solids for each coating. If you conducted testing to determine mass fraction of organic HAP, density, or volume fraction of coating solids, you must keep a copy of the complete test report. If you use information provided to you by the manufacturer or supplier of the material that was based on testing, you must keep the summary sheet of results provided to you by the manufacturer or supplier. You are not required to obtain the test report or other supporting documentation from the manufacturer or supplier.

(c) For each compliance period, the records specified in paragraphs (c)(1) through (4) of this section.

(1) A record of the coating operations at which you used each compliance option and the time periods (beginning and ending dates and times) you used each option.

(2) For the compliant material option, a record of the calculation of the organic HAP content for each coating, using Equation 2 of §63.4741.

(3) For the emission rate without add-on controls option, a record of the calculation of the total mass of organic HAP emissions for the coatings, thinners, and cleaning materials used each month, using Equations 1, 1A through 1C, and 2 of §63.4751; and, if applicable, the calculation used to determine mass of organic HAP in waste materials according to §63.4751(e)(4); the calculation of the total volume of coating solids used each month, using Equation 2 of §63.4751; and the calculation of each 12-month organic HAP emission rate, using Equation 3 of §63.4751.

(4) For the emission rate with add-on controls option, records of the calculations specified in paragraphs (c)(4)(i) through (v) of this section.

(i) The calculation of the total mass of organic HAP emissions for the coatings, thinners, and cleaning materials used each month, using Equations 1 and 1A through 1C of §63.4751; and, if applicable, the calculation used to determine mass of organic HAP in waste materials according to §63.4751(e)(4).

(ii) The calculation of the total volume of coating solids used each month, using Equation 2 of §63.4751.

(iii) The calculation of the mass of organic HAP emission reduction by emission capture systems and add-on control devices, using Equations 1 and 1A through 1D of §63.4761, and Equations 2, 3, and 3A through 3C of §63.4761, as applicable.

(iv) The calculation of the total mass of organic HAP emissions each month, using Equation 4 of §63.4761.

(v) The calculation of each 12-month organic HAP emission rate, using Equation 5 of §63.4761.

(d) A record of the name and volume of each coating, thinner, and cleaning material used during each compliance period.

(e) A record of the mass fraction of organic HAP for each coating, thinner, and cleaning material used during each compliance period.

(f) A record of the volume fraction of coating solids for each coating used during each compliance period.

(g) A record of the density for each coating used during each compliance period; and, if you use either the emission rate without add-on controls or the emission rate with add-on controls compliance option, the density for each thinner and cleaning material used during each compliance period.

(h) If you use an allowance in Equation 1 of §63.4751 for organic HAP contained in waste materials sent to or designated for shipment to a treatment, storage, and disposal facility (TSDF) according to §63.4751(e)(4), you must keep records of the information specified in paragraphs (h)(1) through (3) of this section.

(1) The name and address of each TSDF to which you sent waste materials for which you use an allowance in Equation 1 of §63.4751; a statement of which subparts under 40 CFR parts 262, 264, 265, and 266 apply to the facility; and the date of each shipment.

(2) Identification of the coating operations producing waste materials included in each shipment and the month or months in which you used the allowance for these materials in Equation 1 of §63.4751.

(3) The methodology used in accordance with §63.4751(e)(4) to determine the total amount of waste materials sent to or the amount collected, stored, and designated for transport to a TSDF each month; and the methodology to determine the mass of organic HAP contained in these waste materials. This must include the sources for all data used in the determination, methods used to generate the data, frequency of testing or monitoring, and supporting calculations and documentation, including the waste manifest for each shipment.

(i) [Reserved]

(j) You must keep records of the date, time, and duration of each deviation.

(k) If you use the emission rate with add-on controls option, you must keep the records specified in paragraphs (k)(1) through (8) of this section.

(1) For each deviation, a record of whether the deviation occurred during a period of SSM.

(2) The records in §63.6(e)(3)(iii) through (v) related to SSM.

(3) The records required to show continuous compliance with each operating limit specified in Table 3 to this subpart that applies to you.

(4) For each capture system that is a PTE, the data and documentation you used to support a determination that the capture system meets the criteria in Method 204 of appendix M to 40 CFR part 51 for a PTE and has a capture efficiency of 100 percent, as specified in §63.4765(a).

(5) For each capture system that is not a PTE, the data and documentation you used to determine capture efficiency according to the requirements specified in §§63.4764 and 63.4765(b) through (e), including the records specified in paragraphs (k)(5)(i) through (iii) of this section that apply to you.

(i) *Records for a liquid-to-uncaptured-gas protocol using a temporary total enclosure or building enclosure.* Records of the mass of total volatile hydrocarbon (TVH) as measured by Method 204A or F of appendix M to 40 CFR part 51 for each material used in the coating operation, and the total TVH for all materials used during each capture efficiency test run, including a copy of the test report. Records of the mass of TVH emissions not captured by the capture system that exited the temporary total enclosure or building enclosure during each capture efficiency test run as measured by Method 204D or E of appendix M to 40 CFR part 51, including a copy of the test report. Records documenting that the enclosure used for the capture efficiency test met the criteria in Method 204 of appendix M to 40 CFR part 51 for either a temporary total enclosure or a building enclosure.

(ii) *Records for a gas-to-gas protocol using a temporary total enclosure or a building enclosure.*Records of the mass of TVH emissions captured by the emission capture system as measured by Method 204B or C of appendix M to 40 CFR part 51 at the inlet to the add-on control device, including a copy of the test report. Records of the mass of TVH emissions not captured by the capture system that exited the temporary total enclosure or building enclosure during each capture efficiency test run as measured by Method 204D or E of appendix M to 40 CFR part 51, including a copy of the test report. Records documenting that the enclosure used for the capture efficiency test met the criteria in Method 204 of appendix M to 40 CFR part 51 for either a temporary total enclosure or a building enclosure.

(iii) *Records for an alternative protocol.* Records needed to document a capture efficiency determination using an alternative method or protocol as specified in §63.4765(e), if applicable.

(6) The records specified in paragraphs (k)(6)(i) and (ii) of this section for each add-on control device organic HAP destruction or removal efficiency determination as specified in §63.4766.

(i) Records of each add-on control device performance test conducted according to §§63.4764 and 63.4766.

(ii) Records of the coating operation conditions during the add-on control device performance test showing that the performance test was conducted under representative operating conditions.

(7) Records of the data and calculations you used to establish the emission capture and add-on control device operating limits as specified in §63.4767 and to document compliance with the operating limits as specified in Table 3 to this subpart.

(8) A record of the work practice plan required by §63.4693, and documentation that you are implementing the plan on a continuous basis.

§ 63.4731 In what form and for how long must I keep my records?

(a) Your records must be in a form suitable and readily available for expeditious review, according to §63.10(b)(1). Where appropriate, the records may be maintained as electronic spreadsheets or as a database.

(b) As specified in §63.10(b)(1), you must keep each record for 5 years following the date of each occurrence, measurement, maintenance, corrective action, report, or record.

(c) You must keep each record on-site for at least 2 years after the date of each occurrence, measurement, maintenance, corrective action, report, or record, according to §63.10(b)(1). You may keep the records off-site for the remaining 3 years.

Compliance Requirements for the Compliant Material Option

§ 63.4740 By what date must I conduct the initial compliance demonstration?

You must complete the initial compliance demonstration for the initial compliance period according to the requirements in §63.4741. The initial compliance period begins on the applicable compliance date specified in §63.4683 and ends on the last day of the 12th month following the compliance date. If the compliance date occurs on any day other than the first day of a month, then the initial compliance period extends through the end of that month plus the next 12 months. The initial compliance demonstration includes the calculations according to §63.4741 and supporting documentation showing that during the initial compliance period, you used no coating with an organic HAP content that exceeded the applicable emission limit in §63.4690, and that you used no thinners or cleaning materials that contained organic HAP.

§ 63.4741 How do I demonstrate initial compliance with the emission limitations?

You may use the compliant material option for any individual coating operation, for any group of coating operations in the affected source, or for all the coating operations in the affected source. You must use either the emission rate without add-on controls option or the emission rate with add-on controls option for any coating operation in the affected source for which you do not use this option. To demonstrate initial compliance using the compliant material option, the coating operation or group of coating operations must use no coating with an organic HAP content that exceeds the applicable emission limit in §63.4690 and must use no thinner or cleaning material that contains organic HAP as determined according to this section. Any coating operation for which you use the compliant material option is not required to meet the operating limits or work practice standards required in §§63.4692 and 63.4693, respectively. To demonstrate initial compliance with the emission limitations using the compliant material option, you must meet all the requirements of this section for the coating operation or group of coating operations using this option. Use the procedures in this section on each coating, thinner, and cleaning material in the condition it is in when it is received from its manufacturer or supplier and prior to any alteration. You do not need to redetermine the mass of organic HAP in coatings, thinners, or cleaning materials that have been reclaimed onsite and reused in the coating operation(s) for which you use the compliant material option, provided these materials in their condition as received were demonstrated to comply with the compliant material option. If the mass fraction of organic HAP of a coating equals zero, determined according to paragraph (a) of this section, and you use the compliant material option, you are not required to comply with paragraphs (b) and (c) of this section for that coating.

(a) *Determine the mass fraction of organic HAP for each material used.* You must determine the mass fraction of organic HAP for each coating, thinner, and cleaning material used during the compliance period by using one of the options in paragraphs (a)(1) through (5) of this section.

(1) *Method 311 (appendix A to 40 CFR part 63).* You may use Method 311 for determining the mass fraction of organic HAP. Use the procedures specified in paragraphs (a)(1)(i) and (ii) of this section when performing a Method 311 test. If these values cannot be determined using Method 311, the

owner or operator shall submit an alternative technique for determining their values for approval by the Administrator.

(i) Count each organic HAP that is measured to be present at 0.1 percent by mass or more for OSHA-defined carcinogens as specified in 29 CFR 1910.1200(d)(4), and at 1.0 percent by mass or more for other organic HAP compounds. For example, if toluene (not an OSHA carcinogen) is measured to be 0.5 percent of the material by mass, you do not have to count it. Express the mass fraction of each organic HAP you count as a value truncated to four places after the decimal point (*e.g.,* 0.379178412 truncates to 0.3791).

(ii) Calculate the total mass fraction of organic HAP in the test material by adding up the individual organic HAP mass fractions and truncating the result to three places after the decimal point (*e.g.,* 0.763).

(2) *Method 24 (appendix A to 40 CFR part 60).* For coatings, you may use Method 24 to determine the mass fraction of nonaqueous volatile matter and use that value as a substitute for mass fraction of organic HAP. (Note: Method 24 is not appropriate for those coatings with a water content that would result in an effective detection limit greater than the applicable emission limit.)

(3) *Alternative method.* You may use an alternative test method for determining the mass fraction of organic HAP once the Administrator has approved it. You must follow the procedure in §63.7(f) to submit an alternative test method for approval.

(4) *Information from the supplier or manufacturer of the material.* You may rely on information other than that generated by the test methods specified in paragraphs (a)(1) through (3) of this section, such as manufacturer's formulation data, if it represents each organic HAP that is present at 0.1 percent by mass or more for OSHA-defined carcinogens as specified in 29 CFR 1910.1200(d)(4), and at 1.0 percent by mass or more for other organic HAP compounds. For example, if toluene (not an OSHA carcinogen) is 0.5 percent of the material by mass, you do not have to count it. If there is a disagreement between such information and results of a test conducted according to paragraphs (a)(1) through (3) of this section, then the test method results will take precedence unless, after consultation, a regulated source could demonstrate to the satisfaction of the enforcement agency that the formulation data were correct.

(5) *Solvent blends.* Solvent blends may be listed as single components for some materials in data provided by manufacturers or suppliers. Solvent blends may contain organic HAP which must be counted toward the total organic HAP mass fraction of the materials. When test data and manufacturer's data for solvent blends are not available, you may use the default values for the mass fraction of organic HAP in these solvent blends listed in Table 5 or Table 6 to this subpart. If you use the tables, you must use the values in Table 5 for all solvent blends that match Table 5 entries, and you may only use Table 6 if the solvent blends in the materials you use do not match any of the solvent blends in Table 5 and you only know whether the blend is aliphatic or aromatic. However, if the results of a Method 311 (40 CFR part 63, appendix A) test indicate higher values than those listed on Table 5 or Table 6 to this subpart, the Method 311 results will take precedence.

(b) *Determine the volume fraction of coating solids for each coating.* You must determine the volume fraction of coating solids (liters of coating solids per liter of coating) for each coating used during the compliance period by one of the methods specified in paragraph (b)(1), (2), or (3) of this section.

(1) *ASTM Method D2697–86 (Reapproved 1998) or D6093–97.* You may use ASTM Method D2697–86 (Reapproved 1998), "Standard Test Method for Volume Nonvolatile Matter in Clear or Pigmented Coatings' (incorporated by reference, see §63.14), or D6093–97, "Standard Test Method for Percent Volume Nonvolatile Matter in Clear or Pigmented Coatings Using a Helium Gas Pycnometer" (incorporated by reference, see §63.14), to determine the volume fraction of coating solids for each coating. Divide the nonvolatile volume percent obtained with the methods by 100 to calculate volume fraction of coating solids. If these values cannot be determined using these methods, the owner operator may submit an alternative technique for determining their values for approval by the Administrator.

(2) *Information from the supplier or manufacturer of the material.* You may obtain the volume fraction of coating solids for each coating from the supplier or manufacturer.

(3) *Calculation of volume fraction of coating solids.* If the volume fraction of coating solids cannot be determined using the options in paragraphs (b)(1) and (2) of this section, you must determine it using Equation 1 of this section:

$$V_s = 1 - \left(\frac{m_{volatiles}}{D_{avg}} \right) \qquad \text{(Eq. 1)}$$

Where:

V_s= Volume fraction of coating solids, liters coating solids per liter coating.

$m_{volatiles}$= Total volatile matter content of the coating, including HAP, volatile organic compounds (VOC), water, and exempt compounds, determined according to Method 24 in appendix A of 40 CFR part 60, grams volatile matter per liter coating.

D_{avg}= Average density of volatile matter in the coating, grams volatile matter per liter volatile matter, determined from test results using ASTM Method D1475–90 information from the supplier or manufacturer of the material, or reference sources providing density or specific gravity data for pure materials. If there is disagreement between ASTM Method D1475–90 test results and other information sources, the test results will take precedence.

(c) *Determine the density of each coating.* Determine the density of each coating used during the compliance period from test results using ASTM Method D1475–90 or information from the supplier or manufacturer of the material. If there is disagreement between ASTM Method D1475–90 test results and the supplier's or manufacturer's information, the test results will take precedence.

(d) *Calculate the organic HAP content of each coating.* Calculate the organic HAP content, grams organic HAP per liter coating solids, of each coating used during the compliance period, using Equation 2 of this section:

$$H_c = \frac{(D_c)(W_c)}{V_s} \qquad \text{(Eq. 2)}$$

Where:

H_c= Organic HAP content of the coating, grams organic HAP per liter coating solids.

D_c= Density of coating, grams coating per liter coating, determined according to paragraph (c) of this section.

W_c= Mass fraction of organic HAP in the coating, grams organic HAP per gram coating, determined according to paragraph (a) of this section.

V_s= Volume fraction of coating solids, liter coating solids per liter coating, determined according to paragraph (b) of this section.

(e) *Compliance demonstration.* The organic HAP content for each coating used during the initial compliance period, determined using Equation 2 of this section, must be less than or equal to the applicable emission limit in §63.4690; and each thinner and cleaning material used during the initial compliance period must contain no organic HAP, determined according to paragraph (a) of this section. You must keep all records required by §§63.4730 and 63.4731. As part of the Notification of Compliance Status required in §63.4710, you must identify the coating operation(s) for which you used the compliant material option and submit a statement that the coating operation(s) was (were) in compliance with the emission limitations during the initial compliance period because you used no coatings for which the organic HAP content exceeded the applicable emission limit in §63.4690, and you used no thinners or cleaning materials that contained organic HAP, determined according to paragraph (a) of this section.

§ 63.4742 How do I demonstrate continuous compliance with the emission limitations?

(a) For each compliance period to demonstrate continuous compliance, you must use no coating for which the organic HAP content determined using Equation 2 of §63.4741 exceeds the applicable emission limit in §63.4690; and use no thinner or cleaning material that contains organic HAP, determined according to §63.4741(a). A compliance period consists of 12 months. Each month after the end of the initial compliance period described in §63.4740 is the end of a compliance period consisting of that month and the preceding 11 months.

(b) If you choose to comply with the emission limitations by using the compliant material option, the use of any coating, thinner, or cleaning material that does not meet the criteria specified in paragraph (a) of this section is a deviation from the emission limitations that must be reported as specified in §§63.4710(c)(6) and 63.4720(a)(5).

(c) As part of each semiannual compliance report required by §63.4720, you must identify the coating operation(s) for which you used the compliant material option. If there were no deviations from the emission limitations in §63.4690, submit a statement that the coating operation(s) was (were) in compliance with the emission limitations during the reporting period because you used no coating for which the organic HAP content exceeded the applicable emission limit in §63.4690, and you used no thinner or cleaning material that contained organic HAP, determined according to §63.4741(a).

(d) You must maintain records as specified in §§63.4730 and 63.4731.

Compliance Requirements for the Emission Rate Without Add-On Controls Option
§ 63.4750 By what date must I conduct the initial compliance demonstration?

You must complete the initial compliance demonstration for the initial compliance period according to the requirements of §63.4751. The initial compliance period begins on the applicable compliance date specified in §63.4683 and ends on the last day of the 12th month following the compliance date. If the compliance date occurs on any day other than the first day of a month, then the initial compliance period extends through the end of that month plus the next 12 months. You must determine the mass of organic HAP emissions and volume of coating solids used each month and then calculate a 12-month organic HAP emission rate at the end of the initial 12-month compliance period. The initial compliance demonstration includes the calculations according to §63.4751 and supporting documentation showing that during the initial compliance period the organic HAP emission rate was equal to or less than the applicable emission limit in §63.4690.

§ 63.4751 How do I demonstrate initial compliance with the emission limitations?

You may use the emission rate without add-on controls option for any individual coating operation, for any group of coating operations in the affected source, or for all the coating operations in the affected source. You must use either the compliant material option or the emission rate with add-on controls option for any coating operation in the affected source for which you do not use this option. To demonstrate initial compliance using the emission rate without add-on controls option, the coating operation or group of coating operations must meet the applicable emission limit in §63.4690. Any coating operation for which you use the emission rate without add-on controls option is not required to meet the operating limits or work practice standards required in §§63.4692 and 63.4693, respectively. You must meet all the requirements of this section to demonstrate initial compliance with the applicable emission limit in §63.4690 for the coating operation(s). When calculating the organic HAP emission rate according to this section, do not include any coatings, thinners, or cleaning materials used on coating operations for which you use the compliant material option or the emission rate with add-on controls option. You do not need to redetermine the mass of organic HAP in coatings, thinners, or cleaning materials that have been reclaimed onsite and reused in the coating operation(s) for which you use the emission rate without add-on controls option.

(a) Determine the mass fraction of organic HAP for each material. Determine the mass fraction of organic HAP for each coating, thinner, and cleaning material used during each month according to the requirements in §63.4741(a).

(b) Determine the volume fraction of coating solids for each coating. Determine the volume fraction of coating solids for each coating used during each month according to the requirements in §63.4741(b).

(c) Determine the density of each material. Determine the density of each coating, thinner, and cleaning material used during each month from test results using ASTM Method D1475–90, information from the supplier or manufacturer of the material, or reference sources providing density or specific gravity data for pure materials. If there is disagreement between ASTM Method D1475–90 test results and such other information sources, the test results will take precedence.

(d) Determine the volume of each material used. Determine the volume (liters) of each coating, thinner, and cleaning material used during each month by measurement or usage records.

(e) Calculate the mass of organic HAP emissions. The mass of organic HAP emissions is the combined mass of organic HAP contained in all coatings, thinners, and cleaning materials used during each month minus the organic HAP in certain waste materials. Calculate it using Equation 1 of this section.

$$H_e = A + B + C - R_w \qquad \text{(Eq. 1)}$$

Where:

H_e= Total mass of organic HAP emissions during the month, grams.

A = Total mass of organic HAP in the coatings used during the month, grams, as calculated in Equation 1A of this section.

B = Total mass of organic HAP in the thinners used during the month, grams, as calculated in Equation 1B of this section.

C = Total mass of organic HAP in the cleaning materials used during the month, grams, as calculated in Equation 1C of this section.

R_w= Total mass of organic HAP in waste materials sent or designated for shipment to a hazardous waste TSDF for treatment or disposal during the month, grams, determined according to paragraph (e)(4) of this section. (You may assign a value of zero to $R_w$if you do not wish to use this allowance.)

(1) Calculate the mass of organic HAP in the coatings used during the month, using Equation 1A of this section:

$$A = \sum_{i=1}^{m} (Vol_{c,i})(D_{c,i})(W_{c,i}) \qquad \text{(Eq. 1A)}$$

Where:

A = Total mass of organic HAP in the coatings used during the month, grams.

$Vol_{c,i}$= Total volume of coating, i, used during the month, liters.

$D_{c,i}$= Density of coating, i, grams coating per liter coating.

$W_{c,i}$= Mass fraction of organic HAP in coating, i, grams organic HAP per gram coating.

m = Number of different coatings used during the month.

(2) Calculate the mass of organic HAP in the thinners used during the month, using Equation 1B of this section:

$$B=\sum_{j=1}^{n}(Vol_{t,j})(D_{t,j})(W_{t,j}) \qquad \text{(Eq. 1B)}$$

Where:

B = Total mass of organic HAP in the thinners used during the month, grams.

$Vol_{t,j}$= Total volume of thinner, j, used during the month, liters.

$D_{t,j}$= Density of thinner, j, grams per liter.

$W_{t,j}$= Mass fraction of organic HAP in thinner, j, grams organic HAP per gram thinner.

n = Number of different thinners used during the month.

(3) Calculate the mass of organic HAP in the cleaning materials used during the month using Equation 1C of this section:

$$C=\sum_{k=1}^{p}(Vol_{s,k})(D_{s,k})(W_{s,k}) \qquad \text{(Eq. 1C)}$$

Where:

C = Total mass of organic HAP in the cleaning materials used during the month, grams.

$Vol_{s,k}$= Total volume of cleaning material, k, used during the month, liters.

$D_{s,k}$= Density of cleaning material, k, grams per liter.

$W_{s,k}$= Mass fraction of organic HAP in cleaning material, k, grams organic HAP per gram material.

p = Number of different cleaning materials used during the month.

(4) If you choose to account for the mass of organic HAP contained in waste materials sent or designated for shipment to a hazardous waste TSDF in Equation 1 of this section, then you must determine it according to paragraphs (e)(4)(i) through (iv) of this section.

(i) You may include in the determination only waste materials that are generated by coating operations for which you use Equation 1 of this section and that will be treated or disposed of by a facility regulated as a TSDF under 40 CFR part 262, 264, 265, or 266. The TSDF may be either off-site or on-site. You may not include organic HAP contained in wastewater.

(ii) You must determine either the amount of the waste materials sent to a TSDF during the month or the amount collected and stored during the month and designated for future transport to a TSDF. Do not include in your determination any waste materials sent to a TSDF during a

month if you have already included them in the amount collected and stored during that month or a previous month.

(iii) Determine the total mass of organic HAP contained in the waste materials specified in paragraph (e)(4)(ii) of this section.

(iv) You may use any reasonable methodology to determine the amount of waste materials and the total mass of organic HAP they contain, and you must document your methodology as required in §63.4730(h). To the extent that waste manifests include this information, they may be used as part of the documentation of the amount of waste materials and mass of organic HAP contained in them.

(f) Calculate the total volume of coating solids used. Determine the total volume of coating solids used which is the combined volume of coating solids for all the coatings used during each month, using Equation 2 of this section:

$$V_{st} = \sum_{i=1}^{m} (Vol_{c,i})(V_{s,i}) \qquad \text{(Eq. 2)}$$

Where:

V_{st}= Total volume of coating solids used during the month, liters.

$Vol_{c,i}$= Total volume of coating, i, used during the month, liters.

$V_{s,i}$= Volume fraction of coating solids for coating, i, liter solids per liter coating, determined according to §63.4741(b).

m = Number of coatings used during the month.

(g) Calculate the organic HAP emission rate. Calculate the organic HAP emission rate for the 12-month compliance period, grams organic HAP per liter coating solids used, using Equation 3 of this section:

$$H_{yr} = \frac{\sum_{y=1}^{12} H_e}{\sum_{y=1}^{12} V_{st}} \qquad \text{(Eq. 3)}$$

Where:

H_{yr}= Organic HAP emission rate for the 12-month compliance period, grams organic HAP per liter coating solids.

H_e= Total mass of organic HAP emissions, grams, from all materials used during month, y, as calculated by Equation 1 of this section.

V_{st}= Total volume of coating solids used during month, y, liters, as calculated by Equation 2 of this section.

y = Identifier for months.

(h) Compliance demonstration. The organic HAP emission rate for the initial 12-month compliance period, calculated using Equation 3 of this section, must be less than or equal to the applicable emission limit in §63.4690. You must keep all records as required by §§63.4730 and 63.4731. As part of the Notification of Compliance Status required by §63.4710, you must identify the coating operation(s) for which you used the emission rate without add-on controls option and submit a statement that the coating operation(s) was (were) in compliance with the emission limitations during the initial compliance period because the organic HAP emission rate was less than or equal to the applicable emission limit in §63.4690, determined according to this section.

§ 63.4752 How do I demonstrate continuous compliance with the emission limitations?

(a) To demonstrate continuous compliance, the organic HAP emission rate for each compliance period, calculated using Equation 3 of §63.4751, must be less than or equal to the applicable emission limit in §63.4690. A compliance period consists of 12 months. Each month after the end of the initial compliance period described in §63.4750 is the end of a compliance period consisting of that month and the preceding 11 months. You must perform the calculations in §63.4751(a) through (g) on a monthly basis using data from the previous 12 months of operation.

(b) If the organic HAP emission rate for any 12-month compliance period exceeded the applicable emission limit in §63.4690, this is a deviation from the emission limitations for that compliance period and must be reported as specified in §§63.4710(c)(6) and 63.4720(a)(6).

(c) As part of each semiannual compliance report required by §63.4720, you must identify the coating operation(s) for which you used the emission rate without add-on controls option. If there were no deviations from the emission limitations, you must submit a statement that the coating operation(s) was (were) in compliance with the emission limitations during the reporting period because the organic HAP emission rate for each compliance period was less than or equal to the applicable emission limit in §63.4690, determined according to §63.4751(a) through (g).

(d) You must maintain records as specified in §§63.4730 and 63.4731.

Compliance Requirements for the Emission Rate With Add-On Controls Option

§ 63.4760 By what date must I conduct performance tests and other initial compliance demonstrations?

(a) *New and reconstructed affected sources.* For a new or reconstructed affected source, you must meet the requirements of paragraphs (a)(1) through (4) of this section.

(1) All emission capture systems, add-on control devices, and CPMS must be installed and operating no later than the applicable compliance date specified in §63.4683. Except for solvent recovery systems for which you conduct liquid-liquid material balances according to §63.4761(j), you must conduct a performance test of each capture system and add-on control device according to §§63.4764, 63.4765, and 63.4766, and establish the operating limits required by §63.4692 no later than 180 days after the applicable compliance date specified in §63.4683. For a solvent recovery

system for which you conduct liquid-liquid material balances according to §63.4761(j), you must initiate the first material balance no later than 180 days after the applicable compliance date specified in §63.4683.

(2) You must develop and begin implementing the work practice plan required by §63.4693 no later than the compliance date specified in §63.4683.

(3) You must complete the initial compliance demonstration for the initial compliance period according to the requirements of §63.4761. The initial compliance period begins on the applicable compliance date specified in §63.4683 and ends on the last day of the 12th month following the compliance date. If the compliance date occurs on any day other than the first day of a month, then the initial compliance period extends through the end of that month plus the next 12 months. You must determine the mass of organic HAP emissions and volume of coating solids used each month and then calculate a 12-month organic HAP emission rate at the end of the initial 12-month compliance period. The initial compliance demonstration includes the results of emission capture system and add-on control device performance tests conducted according to §§63.4764, 63.4765, and 63.4766; results of liquid-liquid material balances conducted according to §63.4761(j); calculations according to §63.4761 and supporting documentation showing that during the initial compliance period, the organic HAP emission rate was equal to or less than the emission limit in §63.4690(a); the operating limits established during the performance tests and the results of the continuous parameter monitoring required by §63.4768; and documentation of whether you developed and implemented the work practice plan required by §63.4693.

(4) You do not need to comply with the operating limits for the emission capture system and add-on control device required by §63.4692 until after you have completed the performance tests specified in paragraph (a)(1) of this section. Instead, you must maintain a log detailing the operation and maintenance of the emission capture system, add-on control device, and continuous parameter monitors during the period between the compliance date and the performance test. You must begin complying with the operating limits for your affected source on the date you complete the performance tests specified in paragraph (a)(1) of this section. The requirements in this paragraph (a)(4) do not apply to solvent recovery systems for which you conduct liquid-liquid material balances according to the requirements in §63.4761(j).

(b) *Existing affected sources.* For an existing affected source, you must meet the requirements of paragraphs (b)(1) through (3) of this section.

(1) All emission capture systems, add-on control devices, and CPMS must be installed and operating no later than the applicable compliance date specified in §63.4683. Except for solvent recovery systems for which you conduct liquid-liquid material balances according to §63.4761(j), you must conduct a performance test of each capture system and add-on control device according to the procedures in §§63.4764, 63.4765, and 63.4766 and establish the operating limits required by §63.4692 no later than the applicable compliance date specified in §63.4683. For a solvent recovery system for which you conduct liquid-liquid material balances according to §63.4761(j), you must initiate the first material balance no later than the compliance date specified in §63.4683.

(2) You must develop and begin implementing the work practice plan required by §63.4693 no later than the compliance date specified in §63.4683.

(3) You must complete the initial compliance demonstration for the initial compliance period according to the requirements of §63.4761. The initial compliance period begins on the applicable

compliance date specified in §63.4683 and ends on the last day of the 12th month following the compliance date. If the compliance date occurs on any day other than the first day of a month, then the initial compliance period extends through the end of that month plus the next 12 months. You must determine the mass of organic HAP emissions and volume of coating solids used each month and then calculate a 12-month organic HAP emission rate at the end of the initial 12-month compliance period. The initial compliance demonstration includes the results of emission capture system and add-on control device performance tests conducted according to §§63.4764, 63.4765, and 63.4766; results of liquid-liquid material balances conducted according to §63.4761(j); calculations according to §63.4761 and supporting documentation showing that during the initial compliance period the organic HAP emission rate was equal to or less than the emission limit in §63.4690(b); the operating limits established during the performance tests and the results of the continuous parameter monitoring required by §63.4768; and documentation of whether you developed and implemented the work practice plan required by §63.4693.

§ 63.4761 How do I demonstrate initial compliance?

(a) You may use the emission rate with add-on controls option for any coating operation, for any group of coating operations in the affected source, or for all of the coating operations in the affected source. You may include both controlled and uncontrolled coating operations in a group for which you use this option. You must use either the compliant material option or the emission rate without add-on controls option for any coating operation in the affected source for which you do not use the emission rate with add-on controls option. To demonstrate initial compliance, the coating operation(s) for which you use the emission rate with add-on controls option must meet the applicable emission limitations in §§63.4690, 63.4692, and 63.4693. You must meet all the requirements of this section to demonstrate initial compliance with the emission limitations. When calculating the organic HAP emission rate according to this section, do not include any coatings, thinners, or cleaning materials used on coating operations for which you use the compliant material option or the emission rate without add-on controls option. You do not need to redetermine the mass of organic HAP in coatings, thinners, or cleaning materials that have been reclaimed and reused in the coating operation(s) for which you use the emission rate with add-on controls option.

(b) *Compliance with operating limits.* Except as provided in §63.4760(a)(4), and except for solvent recovery systems for which you conduct liquid-liquid material balances according to the requirements of §63.4761(j), you must establish and demonstrate continuous compliance during the initial compliance period with the operating limits required by §63.4692, using the procedures specified in §§63.4767 and 63.4768.

(c) *Compliance with work practice requirements.* You must develop, implement, and document your implementation of the work practice plan required by §63.4693 during the initial compliance period, as specified in §63.4730.

(d) *Compliance with emission limits.* You must follow the procedures in paragraphs (e) through (n) of this section to demonstrate compliance with the applicable emission limit in §63.4690.

(e) *Determine the mass fraction of organic HAP, density, volume used, and volume fraction of coating solids.* Follow the procedures specified in §63.4751(a) through (d) to determine the mass fraction of organic HAP, density, and volume of each coating, thinner, and cleaning material used during each month; and the volume fraction of coating solids for each coating used during each month.

(f) *Calculate the total mass of organic HAP emissions before add-on controls.* Using Equation 1 of §63.4751, calculate the total mass of organic HAP emissions before add-on controls from all coatings, thinners, and cleaning materials used during each month in the coating operation or group of coating operations for which you use the emission rate with add-on controls option.

(g) *Calculate the organic HAP emission reduction for each controlled coating operation.* Determine the mass of organic HAP emissions reduced for each controlled coating operation during each month. The emission reduction determination quantifies the total organic HAP emissions that pass through the emission capture system and are destroyed or removed by the add-on control device. Use the procedures in paragraph (h) of this section to calculate the mass of organic HAP emission reduction for each controlled coating operation using an emission capture system and add-on control device other than a solvent recovery system for which you conduct liquid-liquid material balances. For each controlled coating operation using a solvent recovery system for which you conduct a liquid-liquid material balance, use the procedures in paragraph (j) of this section to calculate the organic HAP emission reduction.

(h) *Calculate the organic HAP emission reduction for each controlled coating operation not using liquid-liquid material balances.* For each controlled coating operation using an emission capture system and add-on control device other than a solvent recovery system for which you conduct liquid-liquid material balances, calculate the organic HAP emission reduction, using Equation 1 of this section. The calculation applies the emission capture system efficiency and add-on control device efficiency to the mass of organic HAP contained in the coatings, thinners, and cleaning materials that are used in the coating operation served by the emission capture system and add-on control device during each month. For any period of time a deviation specified in §63.4763(c) or (d) occurs in the controlled coating operation, including a deviation during a period of SSM, you must assume zero efficiency for the emission capture system and add-on control device. Equation 1 of this section treats the materials used during such a deviation as if they were used on an uncontrolled coating operation for the time period of the deviation.

$$H_c = \left(A_c + B_c + C_c - H_{unc}\right)\left(\frac{CE}{100} \times \frac{DRE}{100}\right) \qquad \text{(Eq. 1)}$$

Where:

H_c= Mass of organic HAP emission reduction for the controlled coating operation during the month, grams.

A_c= Total mass of organic HAP in the coatings used in the controlled coating operation during the month, grams.

B_c= Total mass of organic HAP in the thinners used in the controlled coating operation during the month, grams, as calculated in Equation 1B of this section.

C_c= Total mass of organic HAP in the cleaning materials used in the controlled coating operation during the month, grams, as calculated in Equation 1C of this section.

H_{unc}= Total mass of organic HAP in the coatings, thinners, and cleaning materials used during all deviations specified in §63.4763(c) and (d) that occurred during the month in the controlled coating operation, grams, as calculated in Equation 1D of this section.

CE = Capture efficiency of the emission capture system vented to the add-on control device, percent. Use the test methods and procedures specified in §§63.4764 and 63.4765 to measure and record capture efficiency.

DRE = Organic HAP destruction or removal efficiency of the add-on control device, percent. Use the test methods and procedures in §§63.4764 and 63.4766 to measure and record the organic HAP destruction or removal efficiency.

(1) Calculate the mass of organic HAP in the coatings used in the controlled coating operation, grams, using Equation 1A of this section:

$$A_c = \sum_{i=1}^{m} (Vol_{c,i})(D_{c,i})(W_{c,i}) \qquad \text{(Eq. 1A)}$$

Where:

A_c= Total mass of organic HAP in the coatings used in the controlled coating operation, grams.

$Vol_{c,i}$= Total volume of coating, i, used during the month, liters.

$D_{c,i}$= Density of coating, i, grams per liter.

$W_{c,i}$= mass fraction of organic HAP in coating, i, grams per gram.

m = Number of different coatings used.

(2) Calculate the mass of organic HAP in the thinners used in the controlled coating operation, grams, using Equation 1B of this section:

$$B_c = \sum_{j=1}^{n} (Vol_{t,j})(D_{t,j})(W_{t,j}) \qquad \text{(Eq. 1B)}$$

Where:

B_c= Total mass of organic HAP in the thinners used in the controlled coating operation during the month, grams.

$Vol_{t,j}$= Total volume of thinner, j, used during the month, liters.

$D_{t,j}$= Density of thinner, j, grams per liter.

$W_{t,j}$= Mass fraction of organic HAP in thinner, j, grams per gram.

n = Number of different thinners used.

(3) Calculate the mass of organic HAP in the cleaning materials used in the controlled coating operation during the month, grams, using Equation 1C of this section:

$$C_c = \sum_{k=1}^{p} (Vol_{s,k})(D_{s,k})(W_{s,k}) \qquad \text{(Eq. 1C)}$$

Where:

C_c= Total mass of organic HAP in the cleaning materials used in the controlled coating operation during the month, grams.

$Vol_{s,k}$= Total volume of cleaning material, k, used during the month, liters.

$D_{s,k}$= Density of cleaning material, k, grams per liter.

$W_{s,k}$= Mass fraction of organic HAP in cleaning material, k, grams per gram.

p = Number of different cleaning materials used.

(4) Calculate the mass of organic HAP in the coatings, thinners, and cleaning materials used in the controlled coating operation during deviations specified in §63.4763(c) and (d), using Equation 1D of this section:

$$H_{unc} = \sum_{k=1}^{q} (Vol_h)(D_h)(W_h) \qquad \text{(Eq. 1D)}$$

Where:

H_{unc}= Total mass of organic HAP in the coatings, thinners, and cleaning materials used during all deviations specified in §63.4763(c) and (d) that occurred during the month in the controlled coating operation, grams.

Vol_h= Total volume of coating, thinner, or cleaning material, h, used in the controlled coating operation during deviations, liters.

D_h= Density of coating, thinner, or cleaning material, h, grams per liter.

W_h= mass fraction of organic HAP in coating, thinner, or cleaning material, h, grams organic HAP per gram coating.

q = Number of different coatings, thinners, or cleaning materials.

(i) [Reserved]

(j) *Calculate the organic HAP emission reduction for each controlled coating operation using liquid-liquid material balances.* For each controlled coating operation using a solvent recovery system for which you conduct liquid-liquid material balances, calculate the organic HAP emission reduction by applying the volatile organic matter collection and recovery efficiency to the mass of organic HAP contained in the coatings, thinners, and cleaning materials that are used in the coating operation controlled by the solvent recovery system during each month. Perform a liquid-liquid material balance for each month as specified in paragraphs (j)(1) through (6) of this section. Calculate the mass of organic HAP emission reduction by the solvent recovery system as specified in paragraph (j)(7) of this section.

(1) For each solvent recovery system, install, calibrate, maintain, and operate according to the manufacturer's specifications, a device that indicates the cumulative amount of volatile organic matter recovered by the solvent recovery system each month. The device must be initially certified by the manufacturer to be accurate to within ±2.0 percent of the mass of volatile organic matter recovered.

(2) For each solvent recovery system, determine the mass of volatile organic matter recovered for the month, grams, based on measurement with the device required in paragraph (j)(1) of this section.

(3) Determine the mass fraction of volatile organic matter for each coating, thinner, and cleaning material used in the coating operation controlled by the solvent recovery system during the month, grams volatile organic matter per gram coating. You may determine the volatile organic matter mass fraction using Method 24 of 40 CFR part 60, appendix A, or an EPA approved alternative method, or you may use information provided by the manufacturer or supplier of the coating. In the event of any inconsistency between information provided by the manufacturer or supplier and the results of Method 24 of 40 CFR part 60, appendix A, or an approved alternative method, the test method results will take precedence unless after consultation, a regulated source could demonstrate to the satisfaction of the enforcement agency that the formulation data were correct.

(4) Determine the density of each coating, thinner, and cleaning material used in the coating operation controlled by the solvent recovery system during the month, grams per liter, according to §63.4751(c).

(5) Measure the volume of each coating, thinner, and cleaning material used in the coating operation controlled by the solvent recovery system during the month, liters.

(6) Each month, calculate the solvent recovery system's volatile organic matter collection and recovery efficiency, using Equation 2 of this section:

$$R_v = 100 \times \frac{M_{vr}}{\sum_{i=1}^{m}(Vol_i)(D_i)(WV_{c,i}) + \sum_{j=1}^{n}(Vol_j)(D_j)(WV_{t,j}) + \sum_{k=1}^{p}(Vol_k)(D_k)(WV_{s,k})}$$

Where:

R_v= Volatile organic matter collection and recovery efficiency of the solvent recovery system during the month, percent.

M_{vr}= Mass of volatile organic matter recovered by the solvent recovery system during the month, grams.

Vol_i= Volume of coating, i, used in the coating operation controlled by the solvent recovery system during the month, liters.

D_i= Density of coating, i, grams per liter.

$WV_{c,i}$= Mass fraction of volatile organic matter for coating, i, grams volatile organic matter per gram coating.

Vol_j= Volume of thinner, j, used in the coating operation controlled by the solvent recovery system during the month, liters.

D_j= Density of thinner, j, grams per liter.

$WV_{t,j}$= Mass fraction of volatile organic matter for thinner, j, grams volatile organic matter per gram thinner.

Vol_k= Volume of cleaning material, k, used in the coating operation controlled by the solvent recovery system during the month, liters.

D_k= Density of cleaning material, k, grams per liter.

$WV_{s,k}$= Mass fraction of volatile organic matter for cleaning material, k, grams volatile organic matter per gram cleaning material.

m = Number of different coatings used in the coating operation controlled by the solvent recovery system during the month.

n = Number of different thinners used in the coating operation controlled by the solvent recovery system during the month.

p = Number of different cleaning materials used in the coating operation controlled by the solvent recovery system during the month.

(7) Calculate the mass of organic HAP emission reduction for the coating operation controlled by the solvent recovery system during the month, using Equation 3 of this section:

$$H_{CSR} = \left(A_{CSR} + B_{CSR} + C_{CSR}\right)\left(\frac{R_v}{100}\right) \qquad \text{(Eq. 3)}$$

Where:

H_{CSR}= Mass of organic HAP emission reduction for the coating operation controlled by the solvent recovery system during the month, grams.

A_{CSR}= Total mass of organic HAP in the coatings used in the coating operation controlled by the solvent recovery system, grams, calculated using Equation 3A of this section.

B_{CSR}= Total mass of organic HAP in the thinners used in the coating operation controlled by the solvent recovery system, grams, calculated using Equation 3B of this section.

C_{CSR}= Total mass of organic HAP in the cleaning materials used in the coating operation controlled by the solvent recovery system, grams, calculated using Equation 3C of this section.

R_V= Volatile organic matter collection and recovery efficiency of the solvent recovery system, percent, from Equation 2 of this section.

(i) Calculate the mass of organic HAP in the coatings used in the coating operation controlled by the solvent recovery system, grams, using Equation 3A of this section:

$$A_{CSR} = \sum_{i=1}^{m} (Vol_{c,i})(D_{c,i})(W_{c,i}) \qquad \text{(Eq. 3A)}$$

Where:

A_{CSR}= Total mass of organic HAP in the coatings used in the coating operation controlled by the solvent recovery system during the month, grams.

$Vol_{c,i}$= Total volume of coating, i, used during the month in the coating operation controlled by the solvent recovery system, liters.

$D_{c,i}$= Density of coating, i, grams per liter.

$W_{c,i}$= Mass fraction of organic HAP in coating, i, grams per gram.

m = Number of different coatings used.

(ii) Calculate the mass of organic HAP in the thinners used in the coating operation controlled by the solvent recovery system, grams, using Equation 3B of this section:

$$B_{CSR} = \sum_{j=1}^{n} (Vol_{t,j})(D_{t,j})(W_{t,j}) \qquad \text{(Eq. 3B)}$$

Where:

B_{CSR}= Total mass of organic HAP in the thinners used in the coating operation controlled by the solvent recovery system during the month, grams.

$Vol_{t,j}$= Total volume of thinner, j, used during the month in the coating operation controlled by the solvent recovery system, liters.

$D_{t,j}$= Density of thinner, j, grams per liter.

$W_{t,j}$= Mass fraction of organic HAP in thinner, j, grams per gram.

n = Number of different thinners used.

(iii) Calculate the mass of organic HAP in the cleaning materials used in the coating operation controlled by the solvent recovery system during the month, grams, using Equation 3C of this section.

$$C_{CSR} = \sum_{k=1}^{p} (Vol_{s,k})(D_{s,k})(W_{s,k}) \qquad \text{(Eq. 3C)}$$

Where:

C_{CSR}= Total mass of organic HAP in the cleaning materials used in the coating operation controlled by the solvent recovery system during the month, grams.

$Vol_{s,k}$= Total volume of cleaning material, k, used during the month in the coating operation controlled by the solvent recovery system, liters.

$D_{s,k}$= Density of cleaning material, k, grams per liter.

$W_{s,k}$= Mass fraction of organic HAP in cleaning material, k, grams per gram.

p = Number of different cleaning materials used.

(k) *Calculate the total volume of coating solids used.* Determine the total volume of coating solids used, liters, which is the combined volume of coating solids for all the coatings used during each month in the coating operation or group of coating operations for which you use the emission rate with add-on controls option, using Equation 2 of §63.4751.

(l) *Calculate the mass of organic HAP emissions for each month.* Determine the mass of organic HAP emissions, grams, during each month, using Equation 4 of this section.

$$H_{HAP} = H_e - \sum_{i=1}^{q} (H_{c,i}) - \sum_{j=1}^{r} (H_{CSR,j}) \qquad \text{(Eq. 4)}$$

Where:

H_{HAP}= Total mass of organic HAP emissions for the month, grams.

H_e= Total mass of organic HAP emissions before add-on controls from all the coatings, thinners, and cleaning materials used during the month, grams, determined according to paragraph (f) of this section.

$H_{c,i}$= Total mass of organic HAP emission reduction for controlled coating operation, i, not using a liquid-liquid material balance, during the month, grams, from Equation 1 of this section.

$H_{CSR,j}$= Total mass of organic HAP emission reduction for coating operation, j, controlled by a solvent recovery system using a liquid-liquid material balance, during the month, grams, from Equation 3 of this section.

q = Number of controlled coating operations not using a liquid-liquid material balance.

r = Number of coating operations controlled by a solvent recovery system using a liquid-liquid material balance.

(m) *Calculate the organic HAP emission rate for the 12-month compliance period.* Determine the organic HAP emission rate for the 12-month compliance period, grams organic HAP per liter coating solids used, using Equation 5 of this section:

$$H_{annual} = \frac{\sum_{y=1}^{12} H_{HAP,y}}{\sum_{y=1}^{12} V_{st,y}} \qquad \text{(Eq. 5)}$$

Where:

H_{annual}= Organic HAP emission rate for the 12-month compliance period, grams organic HAP per liter coating solids.

$H_{HAP,y}$= Organic HAP emission rate for month, y, determined according to Equation 4 of this section.

$V_{st,y}$= Total volume of coating solids, liters, used during month, y, from Equation 2 of §63.4751.

y = Identifier for months.

(n) *Compliance demonstration.* To demonstrate initial compliance with the emission limit, the organic HAP emission rate, calculated using Equation 5 of this section, must be less than or equal to the applicable emission limit in §63.4690. You must keep all records as required by §§63.4730 and 63.4731. As part of the Notification of Compliance Status required by §63.4710, you must identify the coating operation(s) for which you used the emission rate with add-on controls option and submit a statement that the coating operation(s) was (were) in compliance with the emission limitations during the initial compliance period because the organic HAP emission rate was less than or equal to the applicable emission limit in §63.4690, and you achieved the operating limits required by §63.4692 and the work practice standards required by §63.4693.

§ 63.4762 [Reserved]

§ 63.4763 How do I demonstrate continuous compliance with the emission limitations?

(a) To demonstrate continuous compliance with the applicable emission limit in §63.4690, the organic HAP emission rate for each compliance period, calculated using Equation 5 of §63.4761, must be equal to or less than the applicable emission limit in §63.4690. A compliance period consists

of 12 months. Each month after the end of the initial compliance period described in §63.4760 is the end of a compliance period consisting of that month and the preceding 11 months. You must perform the calculations in §63.4761 on a monthly basis using data from the previous 12 months of operation.

(b) If the organic HAP emission rate for any 12-month compliance period exceeded the applicable emission limit in §63.4690, this is a deviation from the emission limitation for that compliance period and must be reported as specified in §§63.4710(c)(6) and 63.4720(a)(7).

(c) You must demonstrate continuous compliance with each operating limit required by §63.4692 that applies to you, as specified in Table 3 to this subpart.

(1) If an operating parameter is out of the allowed range specified in Table 3 to this subpart, this is a deviation from the operating limit that must be reported as specified in §§63.4710(c)(6) and 63.4720(a)(7).

(2) If an operating parameter deviates from the operating limit specified in Table 3 to this subpart, then you must assume that the emission capture system and add-on control device were achieving zero efficiency during the time period of the deviation. For the purposes of completing the compliance calculations specified in §63.4761(h), you must treat the materials used during a deviation on a controlled coating operation as if they were used on an uncontrolled coating operation for the time period of the deviation, as indicated in Equation 1 of §63.4761.

(d) You must meet the requirements for bypass lines in §63.4768(b) for controlled coating operations for which you do not conduct liquid-liquid material balances. If any bypass line is opened and emissions are diverted to the atmosphere when a controlled coating operation is running, this is a deviation that must be reported as specified in §§63.4710(c)(6) and 63.4720(a)(7). For the purposes of completing the compliance calculations specified in §63.4761(h), you must treat the materials used during a deviation on a controlled coating operation as if they were used on an uncontrolled coating operation for the time period of the deviation, as indicated in Equation 1 of §63.4761.

(e) You must demonstrate continuous compliance with the work practice standards in §63.4693. If you did not develop a work practice plan, or you did not implement the plan, or you did not keep the records required by §63.4730(k)(8), this is a deviation from the work practice standards that must be reported as specified in §§63.4710(c)(6) and 63.4720(a)(7).

(f) As part of each semiannual compliance report required in §63.4720, you must identify the coating operation(s) for which you used the emission rate with add-on controls option. If there were no deviations from the emission limitations, submit a statement that you were in compliance with the emission limitations during the reporting period because the organic HAP emission rate for each compliance period was less than or equal to the applicable emission limit in §63.4690, and you achieved the operating limits required by §63.4692 and the work practice standards required by §63.4693 during each compliance period.

(g) [Reserved]

(h) Consistent with §§63.6(e) and 63.7(e)(1), deviations that occur during a period of SSM of the emission capture system, add-on control device, or coating operation that may affect emission capture or control device efficiency are not violations if you demonstrate to the Administrator's satisfaction that you were operating in accordance with §63.6(e)(1). The Administrator will

determine whether deviations that occur during a period you identify as an SSM are violations, according to the provisions in §63.6(e).

(i) [Reserved]

(j) You must maintain records as specified in §§63.4730 and 63.4731.

[68 FR 31760, May 28, 2003, as amended at 71 FR 20466, Apr. 20, 2006]

§ 63.4764 What are the general requirements for performance tests?

(a) You must conduct each performance test required by §63.4760 according to the requirements in §63.7(e)(1) and under the conditions in this section unless you obtain a waiver of the performance test according to the provisions in §63.7(h).

(1) *Representative coating operation operating conditions.* You must conduct the performance test under representative operating conditions for the coating operation. Operations during periods of SSM, and during periods of nonoperation do not constitute representative conditions. You must record the process information that is necessary to document operating conditions during the test and explain why the conditions represent normal operation.

(2) *Representative emission capture system and add-on control device operating conditions.* You must conduct the performance test when the emission capture system and add-on control device are operating at a representative flow rate, and the add-on control device is operating at a representative inlet concentration. You must record information that is necessary to document emission capture system and add-on control device operating conditions during the test and explain why the conditions represent normal operation.

(b) You must conduct each performance test of an emission capture system according to the requirements in §63.4765. You must conduct each performance test of an add-on control device according to the requirements in §63.4766.

§ 63.4765 How do I determine the emission capture system efficiency?

You must use the procedures and test methods in this section to determine capture efficiency as part of the performance test required by §63.4760.

(a) *Assuming 100 percent capture efficiency.* You may assume the capture system efficiency is 100 percent if both of the conditions in paragraphs (a)(1) and (2) of this section are met:

(1) The capture system meets the criteria in Method 204 of appendix M to 40 CFR part 51 for a PTE and directs all the exhaust gases from the enclosure to an add-on control device.

(2) All coatings, thinners, and cleaning materials used in the coating operation are applied within the capture system; coating solvent flash-off and coating, curing, and drying occurs within the capture system; and the removal or evaporation of cleaning materials from the surfaces they are applied to occurs within the capture system. For example, this criterion is not met if parts enter the open shop environment when being moved between a spray booth and a curing oven.

(b) *Measuring capture efficiency.* If the capture system does not meet both of the criteria in paragraphs (a)(1) and (2) of this section, then you must use one of the three protocols described in paragraphs (c), (d), and (e) of this section to measure capture efficiency. The capture efficiency measurements use TVH capture efficiency as a surrogate for organic HAP capture efficiency. For the protocols in paragraphs (c) and (d) of this section, the capture efficiency measurement must consist of three test runs. Each test run must be at least 3 hours in duration or the length of a production run, whichever is longer, up to 8 hours. For the purposes of this test, a production run means the time required for a single part to go from the beginning to the end of production, which includes surface preparation activities and drying or curing time.

(c) *Liquid-to-uncaptured-gas protocol using a temporary total enclosure or building enclosure.* The liquid-to-uncaptured-gas protocol compares the mass of liquid TVH in materials used in the coating operation to the mass of TVH emissions not captured by the emission capture system. Use a temporary total enclosure or a building enclosure and the procedures in paragraphs (c)(1) through (6) of this section to measure emission capture system efficiency using the liquid-to-uncaptured-gas protocol.

(1) Either use a building enclosure or construct an enclosure around the coating operation where coatings, thinners, and cleaning materials are applied, and all areas where emissions from these applied coatings and materials subsequently occur, such as flash-off, curing, and drying areas. The areas of the coating operation where capture devices collect emissions for routing to an add-on control device, such as the entrance and exit areas of an oven or spray booth, must also be inside the enclosure. The enclosure must meet the applicable definition of a temporary total enclosure or building enclosure in Method 204 of appendix M to 40 CFR part 51.

(2) Use Method 204A or 204F of appendix M to 40 CFR part 51 to determine the mass fraction of TVH liquid input from each coating, thinner, and cleaning material used in the coating operation during each capture efficiency test run. To make the determination, substitute TVH for each occurrence of the term volatile organic compounds (VOC) in the methods.

(3) Use Equation 1 of this section to calculate the total mass of TVH liquid input from all the coatings, thinners, and cleaning materials used in the coating operation during each capture efficiency test run.

$$TVH_{used} = \sum_{i=1}^{n} (TVH_i)(Vol_i)(D_i) \qquad \text{(Eq. 1)}$$

Where:

TVH_{used}= Mass of liquid TVH in materials used in the coating operation during the capture efficiency test run, grams.

TVH_i= Mass fraction of TVH in coating, thinner, or cleaning material, i, that is used in the coating operation during the capture efficiency test run, grams TVH per gram material.

Vol_i= Total volume of coating, thinner, or cleaning material, i, used in the coating operation during the capture efficiency test run, liters.

D_i= Density of coating, thinner, or cleaning material, i, grams material per liter material.

n = Number of different coatings, thinners, and cleaning materials used in the coating operation during the capture efficiency test run.

(4) Use Method 204D or E of appendix M to 40 CFR part 51 to measure the total mass, grams, of TVH emissions that are not captured by the emission capture system; they are measured as they exit the temporary total enclosure or building enclosure during each capture efficiency test run. To make the measurement, substitute TVH for each occurrence of the term VOC in the methods.

(i) Use Method 204D of appendix M to 40 CFR part 51 if the enclosure is a temporary total enclosure.

(ii) Use Method 204E of appendix M to 40 CFR part 51 if the enclosure is a building enclosure. During the capture efficiency measurement, all organic compound emitting operations inside the building enclosure, other than the coating operation for which capture efficiency is being determined, must be shut down, but all fans and blowers must be operating normally.

(5) For each capture efficiency test run, determine the percent capture efficiency of the emission capture system using Equation 2 of this section:

$$CE=\frac{\left(TVH_{used}-TVH_{uncaptured}\right)}{TVH_{used}}\times 100 \qquad \text{(Eq. 2)}$$

Where:

CE = Capture efficiency of the emission capture system vented to the add-on control device, percent.

TVH_{used}= Total mass of TVH liquid input used in the coating operation during the capture efficiency test run, grams.

$TVH_{uncaptured}$= Total mass of TVH that is not captured by the emission capture system and that exits from the temporary total enclosure or building enclosure during the capture efficiency test run, grams, determined according to paragraph (c)(4) of this section.

(6) Determine the capture efficiency of the emission capture system as the average of the capture efficiencies measured in the three test runs.

(d) *Gas-to-gas protocol using a temporary total enclosure or a building enclosure.* The gas-to-gas protocol compares the mass of TVH emissions captured by the emission capture system to the mass of TVH emissions not captured. Use a temporary total enclosure or a building enclosure and the procedures in paragraphs (d)(1) through (5) of this section to measure emission capture system efficiency using the gas-to-gas protocol.

(1) Either use a building enclosure or construct an enclosure around the coating operation where coatings, thinners, and cleaning materials are applied, and all areas where emissions from these applied coatings and materials subsequently occur, such as flash-off, curing, and drying areas. The areas of the coating operation where capture devices collect emissions generated by the coating

operation for routing to an add-on control device, such as the entrance and exit areas of an oven or a spray booth, must also be inside the enclosure. The enclosure must meet the applicable definition of a temporary total enclosure or building enclosure in Method 204 of appendix M to 40 CFR part 51.

(2) Use Method 204B or 204C of appendix M to 40 CFR part 51 to measure the total mass, grams, of TVH emissions captured by the emission capture system during each capture efficiency test run as measured at the inlet to the add-on control device. To make the measurement, substitute TVH for each occurrence of the term VOC in the methods.

(i) The sampling points for the Method 204B or 204C of appendix M to 40 CFR part 51 measurement must be upstream from the add-on control device and must represent total emissions routed from the capture system and entering the add-on control device.

(ii) If multiple emission streams from the capture system enter the add-on control device without a single common duct, then the emissions entering the add-on control device must be simultaneously measured in each duct, and the total emissions entering the add-on control device must be determined.

(3) Use Method 204D or 204E of appendix M to 40 CFR part 51 to measure the total mass, grams, of TVH emissions that are not captured by the emission capture system; they are measured as they exit the temporary total enclosure or building enclosure during each capture efficiency test run. To make the measurement, substitute TVH for each occurrence of the term VOC in the methods.

(i) Use Method 204D of appendix M to 40 CFR part 51 if the enclosure is a temporary total enclosure.

(ii) Use Method 204E of appendix M to 40 CFR part 51 if the enclosure is a building enclosure. During the capture efficiency measurement, all organic compound emitting operations inside the building enclosure, other than the coating operation for which capture efficiency is being determined, must be shut down, but all fans and blowers must be operating normally.

(4) For each capture efficiency test run, determine the percent capture efficiency of the emission capture system using Equation 3 of this section:

$$CE = \frac{TVH_{captured}}{\left(TVH_{captured} + TVH_{uncaptured}\right)} \times 100 \qquad \text{(Eq. 3)}$$

Where:

CE = Capture efficiency of the emission capture system vented to the add-on control device, percent.

$TVH_{captured}$= Total mass of TVH captured by the emission capture system as measured at the inlet to the add-on control device during the emission capture efficiency test run, grams, determined according to paragraph (d)(2) of this section.

$TVH_{uncaptured}$= Total mass of TVH that is not captured by the emission capture system and that exits from the temporary total enclosure or building enclosure during the capture efficiency test run, grams, determined according to paragraph (d)(3) of this section.

(5) Determine the capture efficiency of the emission capture system as the average of the capture efficiencies measured in the three test runs.

(e) *Alternative capture efficiency protocol.* As an alternative to the procedures specified in paragraphs (c) and (d) of this section, you may determine capture efficiency using any other capture efficiency protocol and test methods that satisfy the criteria of either the DQO or LCL approach as described in appendix A to subpart KK of this part.

§ 63.4766 How do I determine the add-on control device emission destruction or removal efficiency?

You must use the procedures and test methods in this section to determine the add-on control device emission destruction or removal efficiency as part of the performance test required by §63.4760. You must conduct three test runs as specified in §63.7(e)(3), and each test run must last at least 1 hour.

(a) For all types of add-on control devices, use the test methods specified in paragraphs (a)(1) through (5) of this section.

(1) Use Method 1 or 1A of appendix A to 40 CFR part 60, as appropriate, to select sampling sites and velocity traverse points.

(2) Use Method 2, 2A, 2C, 2D, 2F, or 2G of appendix A to 40 CFR part 60, as appropriate, to measure gas volumetric flow rate.

(3) Use Method 3, 3A, or 3B of appendix A to 40 CFR part 60, as appropriate, for gas analysis to determine dry molecular weight. You may also use as an alternative to Method 3B, the manual method for measuring the oxygen, carbon dioxide, and carbon monoxide content of exhaust gas in ANSI/ASME PTC 19.10–1981, "Flue and Exhaust Gas Analyses [Part 10, Instruments and Apparatus]" (incorporated by reference, see §63.14).

(4) Use Method 4 of appendix A to 40 CFR part 60 to determine stack gas moisture.

(5) Methods for determining gas volumetric flow rate, dry molecular weight, and stack gas moisture must be performed, as applicable, during each test run.

(b) Measure total gaseous organic mass emissions as carbon at the inlet and outlet of the add-on control device simultaneously, using either Method 25 or 25A of appendix A to 40 CFR part 60, as specified in paragraphs (b)(1) through (3) of this section. You must use the same method for both the inlet and outlet measurements.

(1) Use Method 25 of appendix A to 40 CFR part 60 if the add-on control device is an oxidizer, and you expect the total gaseous organic concentration as carbon to be more than 50 parts per million (ppm) at the control device outlet.

(2) Use Method 25A of appendix A to 40 CFR part 60 if the add-on control device is an oxidizer, and you expect the total gaseous organic concentration as carbon to be 50 ppm or less at the control device outlet.

(3) Use Method 25A of appendix A to 40 CFR part 60 if the add-on control device is not an oxidizer.

(c) If two or more add-on control devices are used for the same emission stream, then you must measure emissions at the outlet of each device. For example, if one add-on control device is a concentrator with an outlet for the high-volume, dilute stream that has been treated by the concentrator, and a second add-on control device is an oxidizer with an outlet for the low-volume, concentrated stream that is treated with the oxidizer, you must measure emissions at the outlet of the oxidizer and the high volume dilute stream outlet of the concentrator.

(d) For each test run, determine the total gaseous organic emissions mass flow rates for the inlet and the outlet of the add-on control device, using Equation 1 of this section. If there is more than one inlet or outlet to the add-on control device, you must calculate the total gaseous organic mass flow rate using Equation 1 of this section for each inlet and each outlet and then total all of the inlet emissions and total all of the outlet emissions.

$$M_f = Q_{sd} C_c (12)(41.6)(10^{-6}) \qquad \text{(Eq. 1)}$$

Where:

M_f= Total gaseous organic emissions mass flow rate, grams per hour (h).

C_c= Concentration of organic compounds as carbon in the vent gas, as determined by Method 25 or Method 25A, parts per million by volume (ppmv), dry basis.

Q_{sd}= Volumetric flow rate of gases entering or exiting the add-on control device, as determined by Method 2, 2A, 2C, 2D, 2F, or 2G, dry standard cubic meters/hour (dscm/h).

41.6 = Conversion factor for molar volume, gram-moles per cubic meter (mol/m^3) (@ 293 Kelvin (K) and 760 millimeters of mercury (mmHg)).

(e) For each test run, determine the add-on control device organic emissions destruction or removal efficiency, using Equation 2 of this section:

$$DRE = 100 \times \frac{M_{fi} - M_{fo}}{M_{fi}} \qquad \text{(Eq. 2)}$$

Where:

DRE = Organic emissions destruction or removal efficiency of the add-on control device, percent.

M_{fi}= Total gaseous organic emissions mass flow rate at the inlet(s) to the add-on control device, using Equation 1 of this section, grams/h.

M_{fo}= total gaseous organic emissions mass flow rate at the outlet(s) of the add-on control device, using Equation 1 of this section, grams/h.

(f) Determine the emission destruction or removal efficiency of the add-on control device as the average of the efficiencies determined in the three test runs and calculated in Equation 2 of this section.

§ 63.4767 How do I establish the emission capture system and add-on control device operating limits during the performance test?

During the performance test required by §63.4760 and described in §§63.4764, 63.4765, and 63.4766, you must establish the operating limits required by §63.4692 according to this section, unless you have received approval for alternative monitoring and operating limits under §63.8(f) as specified in §63.4692.

(a) *Thermal oxidizers.* If your add-on control device is a thermal oxidizer, establish the operating limits according to paragraphs (a)(1) and (2) of this section.

(1) During the performance test, you must monitor and record the combustion temperature at least once every 15 minutes during each of the three test runs. You must monitor the temperature in the firebox of the thermal oxidizer or immediately downstream of the firebox before any substantial heat exchange occurs.

(2) Use the data collected during the performance test to calculate and record the average combustion temperature maintained during the performance test. This average combustion temperature is the minimum operating limit for your thermal oxidizer.

(b) *Catalytic oxidizers.* If your add-on control device is a catalytic oxidizer, establish the operating limits according to either paragraphs (b)(1) and (2) or paragraphs (b)(3) and (4) of this section.

(1) During the performance test, you must monitor and record the temperature before the catalyst bed and the temperature difference across the catalyst bed at least once every 15 minutes during each of the three test runs.

(2) Use the data collected during the performance test to calculate and record the average temperature difference across the catalyst bed maintained during the performance test. This is the minimum operating limit for your catalytic oxidizer.

(3) As an alternative to monitoring the temperature difference across the catalyst bed, you may monitor the temperature at the inlet to the catalyst bed and implement a site-specific inspection and maintenance plan for your catalytic oxidizer as specified in paragraph (b)(4) of this section. During the performance test, you must monitor and record the temperature before the catalyst bed at least once every 15 minutes during each of the three test runs. Use the data collected during the performance test to calculate and record the average temperature before the catalyst bed during the performance test. This is the minimum operating limit for your catalytic oxidizer. (Note:For regenerative catalytic oxidizers, the inlet to the catalyst is defined as the general zone between the inlets to the catalyst beds located in the multiple regeneration towers; select either a monitoring location or multiple monitoring locations. If multiple monitoring locations are selected, either establish separate operating limits for each location or calculate an average of the multiple measurements and set a single operating limit.)

(4) You must develop and implement an inspection and maintenance plan for your catalytic oxidizer(s) for which you elect to monitor according to paragraph (b)(3) of this section. The plan

must address, at a minimum, the elements specified in paragraphs (b)(4)(i) through (iii) of this section.

(i) Annual sampling and analysis of the catalyst activity (*i.e,* conversion efficiency) following the recommended procedures from the manufacturer, the catalyst supplier, or the catalyst test provider.

(ii) Monthly inspection of the oxidizer system, including the burner assembly and fuel supply lines for problems and, as necessary, adjust the equipment to assure proper air-to-fuel mixtures.

(iii) Annual internal and monthly external visual inspection of the catalyst bed to check for channeling, abrasion, and settling. If problems are found, you must take corrective action consistent with the manufacturer's recommendation and conduct a new performance test to determine destruction efficiency according to §63.4766.

(c) *Carbon adsorbers.* If your add-on control device is a carbon adsorber, establish the operating limits according to paragraphs (c)(1) and (2) of this section.

(1) You must monitor and record the total regeneration desorbing gas (*e.g.,* steam or nitrogen) mass flow for each regeneration cycle, and the carbon bed temperature after each carbon bed regeneration and cooling cycle for the regeneration cycle either immediately preceding or immediately following the performance test.

(2) The operating limits for your carbon adsorber are the minimum total desorbing gas mass flow recorded during the regeneration cycle, and the maximum carbon bed temperature recorded after the cooling cycle.

(d) *Condensers.* If your add-on control device is a condenser, establish the operating limits according to paragraphs (d)(1) and (2) of this section.

(1) During the performance test, you must monitor and record the condenser outlet (product side) gas temperature at least once every 15 minutes during each of the three test runs.

(2) Use the data collected during the performance test to calculate and record the average condenser outlet (product side) gas temperature maintained during the performance test. This average condenser outlet gas temperature is the maximum operating limit for your condenser.

(e) *Concentrators.* If your add-on control device includes a concentrator, you must establish operating limits for the concentrator according to paragraphs (e)(1) through (4) of this section.

(1) During the performance test, you must monitor and record the desorption concentrate stream gas temperature at least once every 15 minutes during each of the three runs of the performance test.

(2) Use the data collected during the performance test to calculate and record the average temperature. This is the minimum operating limit for the desorption concentrate gas stream temperature.

(3) During the performance test, you must monitor and record the pressure drop of the dilute stream across the concentrator at least once every 15 minutes during each of the three runs of the performance test.

(4) Use the data collected during the performance test to calculate and record the average pressure drop. This is the maximum operating limit for the dilute stream across the concentrator.

(f) *Emission capture system.* For each capture device that is not part of a PTE that meets the criteria of §63.4765(a), establish an operating limit for either the gas volumetric flow rate or duct static pressure, as specified in paragraphs (f)(1) and (2) of this section. The operating limit for a PTE is specified in Table 3 to this subpart.

(1) During the capture efficiency determination required by §63.4760 and described in §§63.4764 and 63.4765, you must monitor and record either the gas volumetric flow rate or the duct static pressure for each separate capture device in your emission capture system at least once every 15 minutes during each of the three test runs at a point in the duct between the capture device and the add-on control device inlet.

(2) Calculate and record the average gas volumetric flow rate or duct static pressure for the three test runs for each capture device. This average gas volumetric flow rate or duct static pressure is the minimum operating limit for that specific capture device.

§ 63.4768 What are the requirements for continuous parameter monitoring system installation, operation, and maintenance?

(a) *General.* You must install, operate, and maintain each CPMS specified in paragraphs (c), (e), (f), and (g) of this section according to paragraphs (a)(1) through (6) of this section. You must install, operate, and maintain each CPMS specified in paragraphs (b) and (d) of this section according to paragraphs (a)(3) through (5) of this section.

(1) The CPMS must complete a minimum of one cycle of operation for each successive 15-minute period. You must have a minimum of four equally spaced successive cycles of CPMS operation in 1 hour.

(2) You must determine the average of all recorded readings for each successive 3-hour period of the emission capture system and add-on control device operation.

(3) You must record the results of each inspection, calibration, and validation check of the CPMS.

(4) You must maintain the CPMS at all times and have available necessary parts for routine repairs of the monitoring equipment.

(5) You must operate the CPMS and collect emission capture system and add-on control device parameter data at all times that a controlled coating operation is operating, except during monitoring malfunctions, associated repairs, and required quality assurance or control activities (including, if applicable, calibration checks and required zero and span adjustments).

(6) You must not use emission capture system or add-on control device parameter data recorded during periods when the control device is not receiving emissions, monitoring malfunctions, associated repairs, out-of-control periods, or required quality assurance or control activities when calculating data averages. You must use all the data collected during all other periods in calculating the data averages for determining compliance with the emission capture system and add-on control device operating limits.

(7) A monitoring malfunction is any sudden, infrequent, not reasonably preventable failure of the CPMS to provide valid data. Monitoring failures that are caused in part by poor maintenance or careless operation are not malfunctions. Any period for which the monitoring system is out-of-control and data are not available for required calculations is a deviation from the monitoring requirements.

(b) *Capture system bypass line.* You must meet the requirements of paragraphs (b)(1) and (2) of this section for each emission capture system that contains bypass lines that could divert emissions away from the add-on control device to the atmosphere.

(1) You must monitor or secure the valve or closure mechanism controlling the bypass line in a nondiverting position in such a way that the valve or closure mechanism cannot be opened without creating a record that the valve was opened. The method used to monitor or secure the valve or closure mechanism must meet one of the requirements specified in paragraphs (b)(1)(i) through (iv) of this section.

(i) *Flow control position indicator.* Install, calibrate, maintain, and operate according to the manufacturer's specifications a flow control position indicator that takes a reading at least once every 15 minutes and provides a record indicating whether the emissions are directed to the add-on control device or diverted from the add-on control device. The time of occurrence and flow control position must be recorded, as well as every time the flow direction is changed. The flow control position indicator must be installed at the entrance to any bypass line that could divert the emissions away from the add-on control device to the atmosphere.

(ii) *Car-seal or lock-and-key valve closures.* Secure any bypass line valve in the closed position with a car-seal or a lock-and-key type configuration. You must visually inspect the seal or closure mechanism at least once every month to ensure that the valve is maintained in the closed position, and the emissions are not diverted away from the add-on control device to the atmosphere.

(iii) *Valve closure monitoring.* Ensure that any bypass line valve is in the closed (non-diverting) position through monitoring of valve position at least once every 15 minutes. You must inspect the monitoring system at least once every month to verify that the monitor will indicate valve position.

(iv) *Automatic shutdown system.* Use an automatic shutdown system in which the coating operation is stopped when flow is diverted by the bypass line away from the add-on control device to the atmosphere when the coating operation is running. You must inspect the automatic shutdown system at least once every month to verify that it will detect diversions of flow and shut down the coating operation.

(2) If any bypass line is opened and there was a deviation from the applicable emission limitation, you must include a description of why the bypass line was opened and the length of time it remained open in the semiannual compliance reports required in §63.4720.

(c) *Thermal oxidizers and catalytic oxidizers.* If you are using a thermal oxidizer or catalytic oxidizer as an add-on control device (including those used with concentrators or with carbon adsorbers to treat desorbed concentrate streams), you must comply with the requirements in paragraphs (c)(1) through (3) of this section:

(1) For a thermal oxidizer, install a gas temperature monitor in the firebox of the thermal oxidizer or in the duct immediately downstream of the firebox before any substantial heat exchange occurs.

(2) For a catalytic oxidizer, you must install a gas temperature monitor in the gas stream immediately before the catalyst bed, and if you established operating limits according to §63.4767(b)(1) and (2), also install a gas temperature monitor in the gas stream immediately after the catalyst bed.

(i) If you establish operating limits according to §63.4767(b)(1) and (2), then you must install the gas temperature monitors both upstream and downstream of the catalyst bed. The temperature monitors must be in the gas stream immediately before and after the catalyst bed to measure the temperature difference across the bed.

(ii) If you establish operating limits according to §63.4767(b)(3) and (4), then you must install a gas temperature monitor upstream of the catalyst bed. The temperature monitor must be in the gas stream immediately before the catalyst bed to measure the temperature.

(3) For all thermal oxidizers and catalytic oxidizers, you must meet the requirements in paragraphs (a) and (c)(3)(i) through (vii) of this section for each gas temperature monitoring device.

(i) Locate the temperature sensor in a position that provides a representative temperature.

(ii) Use a temperature sensor with a measurement sensitivity of 4 degrees Fahrenheit or 0.75 percent of the temperature value, whichever is larger.

(iii) Shield the temperature sensor system from electromagnetic interference and chemical contaminants.

(iv) If a gas temperature chart recorder is used, it must have a measurement sensitivity in the minor division of at least 20 degrees Fahrenheit.

(v) Perform an electronic calibration at least semiannually according to the procedures in the manufacturer's owners manual. Following the electronic calibration, you must conduct a temperature sensor validation check in which a second or redundant temperature sensor placed nearby the process temperature sensor must yield a reading within 30 degrees Fahrenheit of the process temperature sensor reading.

(vi) Conduct calibration and validation checks any time the sensor exceeds the manufacturer's specified maximum operating temperature range or install a new temperature sensor.

(vii) At least monthly, inspect components for integrity and electrical connections for continuity, oxidation, and galvanic corrosion.

(d) *Carbon adsorbers.* If you are using a carbon adsorber as an add-on control device, you must monitor the total regeneration desorbing gas (*e.g.,* steam or nitrogen) mass flow for each regeneration cycle, the carbon bed temperature after each regeneration and cooling cycle, and comply with paragraphs (a)(3) through (5) and (d)(1) and (2) of this section.

(1) The regeneration desorbing gas mass flow monitor must be an integrating device having a measurement sensitivity of plus or minus 10 percent capable of recording the total regeneration desorbing gas mass flow for each regeneration cycle.

(2) The carbon bed temperature monitor must have a measurement sensitivity of 1 percent of the temperature recorded or 1 degree Fahrenheit, whichever is greater, and must be capable of recording the temperature within 15 minutes of completing any carbon bed cooling cycle.

(e) *Condensers.* If you are using a condenser, you must monitor the condenser outlet (product side) gas temperature and comply with paragraphs (a) and (e)(1) and (2) of this section.

(1) The gas temperature monitor must have a measurement sensitivity of 1 percent of the temperature recorded or 1 degree Fahrenheit, whichever is greater.

(2) The temperature monitor must provide a gas temperature record at least once every 15 minutes.

(f) *Concentrators.* If you are using a concentrator, such as a zeolite wheel or rotary carbon bed concentrator, you must comply with the requirements in paragraphs (f)(1) and (2) of this section.

(1) You must install a temperature monitor in the desorption gas stream. The temperature monitor must meet the requirements in paragraphs (a) and (c)(3) of this section.

(2) You must install a device to monitor pressure drop across the zeolite wheel or rotary carbon bed. The pressure monitoring device must meet the requirements in paragraphs (a) and (f)(2)(i) through (vii) of this section.

(i) Locate the pressure sensor(s) in or as close to a position that provides a representative measurement of the pressure.

(ii) Minimize or eliminate pulsating pressure, vibration, and internal and external corrosion.

(iii) Use a gauge with a minimum tolerance of 0.5 inch of water or a transducer with a minimum tolerance of 1 percent of the pressure range.

(iv) Check the pressure tap daily.

(v) Using a manometer, check gauge calibration quarterly and transducer calibration monthly.

(vi) Conduct calibration checks any time the sensor exceeds the manufacturer's specified maximum operating pressure range or install a new pressure sensor.

(vii) At least monthly, inspect components for integrity, electrical connections for continuity, and mechanical connections for leakage.

(g) *Emission capture systems.* The capture system monitoring system must comply with the applicable requirements in paragraphs (g)(1) and (2) of this section.

(1) For each flow measurement device, you must meet the requirements in paragraphs (a) and (g)(1)(i) through (iv) of this section.

(i) Locate a flow sensor in a position that provides a representative flow measurement in the duct from each capture device in the emission capture system to the add-on control device.

(ii) Reduce swirling flow or abnormal velocity distributions due to upstream and downstream disturbances.

(iii) Conduct a flow sensor calibration check at least semiannually.

(iv) At least monthly, inspect components for integrity, electrical connections for continuity, and mechanical connections for leakage.

(2) For each pressure drop measurement device, you must comply with the requirements in paragraphs (a) and (g)(2)(i) through (vi) of this section.

(i) Locate the pressure sensor(s) in or as close to a position that provides a representative measurement of the pressure drop across each opening you are monitoring.

(ii) Minimize or eliminate pulsating pressure, vibration, and internal and external corrosion.

(iii) Check pressure tap pluggage daily.

(iv) Using an inclined manometer with a measurement sensitivity of 0.0002 inch water, check gauge calibration quarterly and transducer calibration monthly.

(v) Conduct calibration checks any time the sensor exceeds the manufacturer's specified maximum operating pressure range or install a new pressure sensor.

(vi) At least monthly, inspect components for integrity, electrical connections for continuity, and mechanical connections for leakage.

Other Requirements and Information

§ 63.4780 Who implements and enforces this subpart?

(a) This subpart can be implemented and enforced by us, the EPA, or a delegated authority such as your State, local, or tribal agency. If the EPA Administrator has delegated authority to your State, local, or tribal agency, then that agency, in addition to the EPA, has the authority to implement and enforce this subpart. You should contact your EPA Regional Office to find out if implementation and enforcement of this subpart is delegated to your State, local, or tribal agency.

(b) In delegating implementation and enforcement authority of this subpart to a State, local, or tribal agency under 40 CFR part 63, subpart E, the authorities contained in paragraph (c) of this section are retained by the EPA Administrator and are not transferred to the State, local, or tribal agency.

(c) The authorities that will not be delegated to State, local, or tribal agencies are listed in paragraphs (c)(1) through (4) of this section:

(1) Approval of alternatives to the work practice standards under §63.4693.

(2) Approval of major alternatives to test methods under §63.7(e)(2)(ii) and (f) and as defined in §63.90.

(3) Approval of major alternatives to monitoring under §63.8(f) and as defined in §63.90.

(4) Approval of major changes to recordkeeping and reporting under §63.10(f) and as defined in §63.90.

§ 63.4781 What definitions apply to this subpart?

Terms used in this subpart are defined in the CAA, in 40 CFR 63.2, and in this section as follows:

Add-on control means an air pollution control device, such as a thermal oxidizer or carbon adsorber, that reduces pollution in an air stream by destruction or removal before discharge to the atmosphere.

Adhesive means any chemical substance that is applied for the purpose of bonding two surfaces together.

Block average is an average of data points collected over any specified, continuous 180-minute block of time (*e.g.,* a 3-hour block could be noon to 3 p.m., with a subsequent total of eight 3-hour blocks within a 24-hour period).

Capture device means a hood, enclosure, room, floor sweep, or other means of containing or collecting emissions and directing those emissions into an add-on air pollution control device.

Capture efficiency or *capture system efficiency* means the portion (expressed as a percentage) of the pollutants from an emission source that is delivered to an add-on control device.

Capture system means one or more capture devices intended to collect emissions generated by a coating operation in the use of coatings or cleaning materials, both at the point of application and at subsequent points where emissions from the coatings or cleaning materials occur, such as flashoff, drying, or curing. As used in this subpart, multiple capture devices that collect emissions generated by a coating operation are considered a single capture system.

Cleaning material means a solvent used to remove contaminants and other materials, such as dirt, grease, oil, and dried or wet coating (*e.g.,* depainting), from a substrate before or after coating application or from equipment associated with a coating operation, such as spray booths, spray guns, racks, tanks, and hangers. Thus, it includes any cleaning material used on substrates or equipment or both.

Coating means a material applied to a substrate for decorative, protective, or functional purposes. Such materials include, but are not limited to, paints, sealants, caulks, inks, adhesives, and maskants. Decorative, protective, or functional materials that consist only of protective oils for metal, acids, bases, or any combination of these substances are not considered coatings for the purposes of this subpart.

Coating operation means equipment used to apply cleaning materials to a substrate to prepare it for coating application or to remove dried coating (surface preparation), to apply coating to a substrate (coating application) and to dry or cure the coating after application, or to clean coating operation equipment (equipment cleaning). A single coating operation may include any combination of these types of equipment, but always includes at least the point at which a coating or cleaning material is applied and all subsequent points in the affected source where organic HAP emissions from that coating or cleaning material occur. There may be multiple coating operations in an affected source. Coating application with hand-held nonrefillable aerosol containers, touchup markers, or marking pens is not a coating operation for the purposes of this subpart.

Coating solids means the nonvolatile portion of the coating that makes up the dry film.

Continuous parameter monitoring system (CPMS) means the total equipment that may be required to meet the data acquisition and availability requirements of this subpart used to sample, condition (if applicable), analyze, and provide a record of coating operation, or capture system, or add-on control device parameters.

Controlled coating operation means a coating operation from which some or all of the organic HAP emissions are routed through an emission capture system and add-on control device.

Deviation means any instance in which an affected source subject to this subpart, or an owner or operator of such a source:

(1) Fails to meet any requirement or obligation established by this subpart including, but not limited to any emission limit, or operating limit, or work practice standard;

(2) Fails to meet any term or condition that is adopted to implement an applicable requirement in this subpart and that is included in the operating permit for any affected source required to obtain such a permit; or

(3) Fails to meet any emission limit, or operating limit, or work practice standard in this subpart during SSM, regardless of whether or not such failure is permitted by this subpart.

Emission limitation means an emission limit, operating limit, or work practice standard.

Enclosure means a structure that surrounds a source of emissions and captures and directs the emissions to an add-on control device.

Exempt compound means a specific compound that is not considered a VOC due to negligible photochemical reactivity. The exempt compounds are listed in 40 CFR 51.100(s).

Finished wood product means any wood building product to which a protective, decorative, or functional layer has been applied. Materials used include, but are not limited to, paints, stains, sealers, topcoats, basecoats, primers, enamels, inks, and adhesives.

Laminated wood product means any wood building product to which a protective, decorative, or functional layer has been bonded with an adhesive. Products that are produced by bonding layers to the substrate as a part of the substrate manufacturing process (prior to pressing) are not considered laminated products under this subpart.

Manufacturer's formulation data means data on a material (such as a coating) that are supplied by the material manufacturer based on knowledge of the ingredients used to manufacture that material, rather than based on testing of the material with the test methods specified in §63.4741. Manufacturer's formulation data may include, but are not limited to, information on density, organic HAP content, volatile organic matter content, and coating solids content.

Mass fraction of organic HAP means the ratio of the mass of organic HAP to the mass of a material in which it is contained, expressed as grams of organic HAP per gram of material.

Millwork means lumber that has been remanufactured into a wood building product or component such as door, window, and staircase part(s), or decorative trim.

Month means a calendar month or a pre-specified period of 28 days to 35 days to allow for flexibility in recordkeeping when data are based on a business accounting period.

Organic HAP content means the mass of organic HAP per volume of coating solids for a coating calculated using Equation 2 of §63.4741. The organic HAP content is determined for the coating in the condition it is in when received from its manufacturer or supplier and does not account for any alteration after receipt.

Permanent total enclosure (PTE) means a permanently installed enclosure that meets the criteria of Method 204 of appendix M, 40 CFR part 51, for a PTE and that directs all the exhaust gases from the enclosure to an add-on control device.

Protective oil means an organic material that is applied to metal for the purpose of providing lubrication or protection from corrosion without forming a solid film. This definition of protective oil includes, but is not limited to, lubricating oils, evaporative oils (including those that evaporate completely), and extrusion oils.

Research or laboratory facility means a facility whose primary purpose is for research and development of new processes and products, that is conducted under the close supervision of technically trained personnel, and is not engaged in the manufacture of final or intermediate products for commercial purposes, except in a de minimis manner.

Responsible official means responsible official as defined in 40 CFR 70.2.

Startup, initial means the first time equipment is brought online in a source.

Surface preparation means use of a cleaning material on a portion of or all of a substrate. This includes use of a cleaning material to remove dried coating, which is sometimes called "depainting."

Temporary total enclosure means an enclosure constructed for the purpose of measuring the capture efficiency of pollutants emitted from a given source as defined in Method 204 of appendix M, 40 CFR part 51.

Thinner means an organic solvent that is added to a coating after the coating is received from the supplier.

Tileboard means hardboard that meets the specifications for Class I given by the standard ANSI/AHA A135.4–1995 as approved by the American National Standards Institute. The standard specifies requirements and test methods for water absorption, thickness swelling, modulus of rupture, tensile strength, surface finish, dimensions, squareness, edge straightness, and moisture content for five classes of hardboard. Tileboard is also known as Class I hardboard or tempered hardboard.

Total volatile hydrocarbon (TVH) means the total amount of nonaqueous volatile organic matter determined according to Methods 204 and 204A through 204F of appendix M to 40 CFR part 51 and substituting the term TVH each place in the methods where the term VOC is used. The TVH includes both VOC and non-VOC.

Uncontrolled coating operation means a coating operation from which none of the organic HAP emissions are routed through an emission capture system and add-on control device.

Volatile organic compound (VOC) means any compound defined as VOC in 40 CFR 51.100(s).

Volume fraction of coating solids means the ratio of the volume of coating solids (also known as volume of nonvolatiles) to the volume of coating; liters of coating solids per liter of coating.

Wastewater means water that is generated in a coating operation and is collected, stored, or treated prior to being discarded or discharged.

Wood building product means any product that contains more than 50 percent by weight wood or wood fiber, excluding the weight of any glass components, and is used in the construction, either interior or exterior, of a residential, commercial, or institutional building.

Table 1 to Subpart QQQQ of Part 63—Emission Limits for New or Reconstructed Affected Sources

You must comply with the emission limits that apply to your affected source in the following table as required by §63.4690.

If the affected source applies coating to products in the following subcategory. . .	Then, the organic HAP emission limit for the affected source, in grams HAP/liter solids (lb HAP/gal solids)[1,2] is:
1. Exterior siding and primed doorskins	0 (0.00)
2. Flooring	0 (0.00)
3. Interior wall paneling or tileboard	5 (0.04)
4. Other interior panels	0 (0.00)
5. Doors, windows, and miscellaneous	57 (0.48)

[1]Determined as a rolling 12-month emission rate according to the requirements in §63.4741, §63.4751, or §63.4761, as applicable.

[2]If the affected source applies coatings to products in more than one of the subcategories listed in the table, then you must determine the applicable emission limit according to §63.4690(c).

Table 2 to Subpart QQQQ of Part 63—Emission Limits for Existing Affected Sources

You must comply with the emission limits that apply to your affected source in the following table as required by §63.4690.

If the affected source applies coating to products in the following subcategory. . .	*Then, the organic HAP emission limit for the affected source, in grams HAP/liter solids (lb HAP/gal solids)[1,2] is:*
1. Exterior siding and primed doorskins	*7 (0.06)*
2. Flooring	*93 (0.78)*
3. Interior wall paneling or tileboard	*183 (1.53)*
4. Other interior panels	*20 (0.17)*
5. Doors, windows, and miscellaneous	*231 (1.93)*

[1]*Determined as a rolling 12-month emission rate according to the requirements in §63.4741, §63.4751, or §63.4761, as applicable.*

[2]*If the affected source applies coatings to products in more than one of the subcategories listed in the table, then you must determine the applicable emission limit according to §63.4690(c).*

Table 3 to Subpart QQQQ of Part 63—Operating Limits if Using the Emission Rate With Add-On Controls Option

If you are required to comply with operating limits by §63.4692, you must comply with the applicable operating limits in the following table:

For the following device . . .	You must meet the following operating limit . . .	And you must demonstrate continuous compliance with the operating limit by . . .
1. Thermal oxidizer	a. The average combustion temperature in any 3-hour period must not fall below the combustion temperature limit established according to §63.4767(a)	i. Collecting the combustion temperature data according to §63.4768(c); ii. Reducing the data to 3-hour block averages; and iii. Maintaining the 3-hour block average combustion temperature at or above the temperature limit.
2. Catalytic oxidizer	a. The average temperature difference measured across the catalyst bed in any 3-hour period must not fall below the limit established according to §63.4767(b); or	i. Collecting the temperature data according to §63.4768(c); ii. Reducing the data to 3-hour block averages; and iii. Maintaining the 3-hour block temperature difference across the catalyst bed at or above the temperature limit.
	b. Ensure that the inlet temperature of the catalyst bed in any 3-hour period does not fall below the temperature limit established according to §63.4767(b)(2) and develop and implement an inspection and maintenance plan according to §63.4767(b)(3) and (4)	i. Collecting the temperature data according to §63.4768(c), reducing the data to 3-hour block averages, and maintaining the 3-hour average temperature at or above the temperature limit; and ii. Complying with the inspection and maintenance plan developed according to §63.4767(b)(3) and (4).
3. Carbon absorber	a. The total regeneration desorbing gas (*e.g.*,steam or nitrogen) mass flow for each carbon bed regeneration cycle must not fall below the total regeneration desorbing gas mass flow limit established according to §63.4767(c)	i. Measuring the total regeneration desorbing gas (*e.g.*, steam or nitrogen) mass flow for each regeneration cycle according to §63.4768(d); and ii. Maintaining the total regeneration desorbing gas mass flow at or above the mass flow limit.
	b. The temperature of the carbon bed, after completing each regeneration and any cooling cycle, must not exceed the carbon bed temperature limit established according to §63.4767(c)	i. Measuring the temperature of the carbon bed, after completing each regeneration and any cooling cycle, according to §63.4768(d); and ii. Operating and carbon beds such that each carbon bed is not returned to service until completing each regeneration and any cooling cycle until the recorded temperature of the carbon bed is at or below the temperature limit.

4. Condenser	a. The average condenser outlet (product side) gas temperature in any 3-hour period must not exceed the temperature limit established according to §63.4767(d)	i. Collecting the condenser outlet (product side) gas temperature according to §63.4768(e); ii. Reducing the data to 3-hour block averages; and iii. Maintaining the 3-hour block average gas temperature at the outlet at or below the temperature limit.
5. Emission capture system that is a PTE according to §63.4765(a)	a. The direction of the air flow at all times must be into the enclosure; and either	i. Collecting the direction of the air flow; and either the facial velocity of air through all natural draft openings according to §63.4768(g)(1) or the pressure drop across the enclosure according to §63.4768(g)(2); and
		ii. Maintaining the facial velocity of air flow through all natural draft openings or the pressure drop at or above the facial velocity limit or pressure drop limit, and maintaining the direction of air flow into the enclosure at all times.
	b. The average facial velocity of air through all natural draft openings in the enclosure must be at least 200 feet per minute; or	i. See items 5.a.i and 5.a.ii.
	c. The pressure drop across the enclosure must be at least 0.007 inch H_2O, as established in Method 204 of appendix M to 40 CFR part 51	i. See items 5.a.i and 5.a.ii.
6. Emission capture system that is not a PTE according to §63.4765(a)	a. The average gas volumetric flow rate or duct static pressure in each duct between a capture device and add-on control device inlet in any 3-hour period must not fall below the average volumetric flow rate or duct static pressure limit established for that capture device according to §63.4767(f)	i. Collecting the gas volumetric flow gas or duct static pressure for each capture device according to §63.4768(g); ii. Reducing the data to 3-hour block averages; and iii. Maintaining the 3-hour block average gas volumetric flow rate or duct static pressure for each capture device at or above the gas volumetric flow rate or duct static pressure limit
7. Concentrators, including zeolite wheels and rotary carbon absorbers	The average gas temperature of the desorption concentrate stream in any 3-hour period must not fall below the limit established according to §63.4767(e); and	i. Collecting the temperature data according to §63.4768(f); ii. Reducing the data to 3-hour block averages; and iii. Maintaining the 3-hour block average temperature at or above the temperature limit.
	b. The average pressure drop of the dilute stream across the concentrator in any 3-hour period must not exceed the limit established according to §63.4767(e)	i. Collecting the pressure drop data according to §63.4768(f); and ii. Reducing the pressure drop data to 3-hour block averages; and iii. Maintaining the 3-hour block average pressure drop at or below at the pressure drop limit.

Table 4 to Subpart QQQQ of Part 63—Applicability of General Provisions to Subpart QQQQ of Part 63

You must comply with the applicable General Provisions requirements according to the following table:

Citation	Subject	Applicable to subpart QQQQ	Explanation
§63.1(a)(1)–(14)	General Applicability	Yes.	
§63.1(b)(1)–(3)	Initial Applicability Determination	Yes	Applicability to subpart QQQQ is also specified in §63.4681.
§63.1(c)(1)	Applicability After Standard Established	Yes.	
§63.1(c)(2)–(3)	Applicability of Permit Program for Area Sources	No	Area sources are not subject to subpart QQQQ.
§63.1(c)(4)–(5)	Extensions and Notifications	Yes.	
§63.1(e)	Applicability of Permit Program Before Relevant Standard is Set	Yes.	
§63.2	Definitions	Yes	Additional definitions are specified in §63.4781.
§63.3(a)–(c)	Units and Abbreviations	Yes.	
§63.4(a)(1)–(5)	Prohibited Activities	Yes.	
§63.4(b)–(c)	Circumvention/Severability	Yes.	
§63.5(a)	Construction/Reconstruction	Yes.	
§63.5(b)(1)–(6)	Requirements for Existing, Newly Constructed, and Reconstructed Sources	Yes.	
§63.5(d)	Application for Approval of Construction/Reconstruction	Yes.	
§63.5(e)	Approval of Construction/Reconstruction	Yes.	
§63.5(f)	Approval of Construction/Reconstruction Based on Prior State Review	Yes.	
§63.6(a)	Compliance With Standards and Maintenance Requirements—Applicability	Yes	
§63.6(b)(1)–(7)	Compliance Dates for New and Reconstructed Sources	Yes	§63.4683 specifies the compliance dates.
§63.6(c)(1)–(5)	Compliance Dates for Existing Sources	Yes	§63.4683 specifies the compliance dates.
§63.6(e)(1)–(2)	Operation and Maintenance	Yes	
§63.6(e)(3)	SSMP	Yes	Only sources using an add-on control device to comply with the standard must complete SSMP.
§63.6(f)(1)	Compliance Except During SSM	Yes	Applies only to sources using an add-on control device to comply with the standard.

§63.6(f)(2)–(3)	Methods for Determining Compliance	Yes	
§63.6(g)(1)–(3)	Use of an Alternative Standard	Yes	
§63.6(h)	Compliance With Opacity/Visible Emission Standards	No	Subpart QQQQ does not establish opacity standards and does not require continuous opacity monitoring systems (COMS).
§63.6(i)(1)–(16)	Extension of Compliance	Yes	
§63.6(j)	Presidential Compliance Exemption	Yes	
§63.7(a)(1)	Performance Test Requirements—Applicability	Yes	Applies to all affected sources. Additional requirements for performance testing are specified in §§63.4764, 63.4765, and 63.4766.
§63.7(a)(2)	Performance Test Requirements—Dates	Yes	Applies only to performance tests for capture system and control device efficiency at sources using these to comply with the standard. §63.4760 specifies the schedule for performance test requirements that are earlier than those specified in §63.7(a)(2).
§63.7(a)(3)	Performance Tests Required By the Administrator	Yes.	
§63.7(b)–(e)	Performance Test Requirements—Notification, Quality Assurance, Facilities Necessary for Safe Testing, Conditions During Test	Yes	Applies only to performance tests for capture system and add-on control device efficiency at sources using these to comply with the standard.
§63.7(f)	Performance Test Requirements—Use of Alternative Test Method	Yes	Applies to all test methods except those used to determine capture system efficiency.
§63.7(g)–(h)	Performance Test Requirements—Data Analysis, Recordkeeping, Reporting, Waiver of Test	Yes	Applies only to performance tests for capture system and add-on control device efficiency at sources using these to comply with the standard.
§63.8(a)(1)–(3)	Monitoring Requirements—Applicability	Yes	Applies only to monitoring of capture system and add-on control device efficiency at sources using these to comply with the standard. Additional requirements for monitoring are specified in §63.4768.
§63.8(a)(4)	Additional Monitoring Requirements	No	Subpart QQQQ does not have monitoring requirements for flares.
§63.8(b)	Conduct of Monitoring	Yes.	
§63.8(c)(1)–(3)	Continuous Monitoring System (CMS) Operation and Maintenance	Yes	Applies only to monitoring of capture system and add-on control device efficiency at sources using these to comply with the standard. Additional requirements for CMS operations and maintenance are specified in §63.4768.
§63.8(c)(4)	CMSs	No	§63.4768 specifies the requirements for the operation of CMS for capture systems and add-on control devices at sources using these to comply.
§63.8(c)(5)	COMS	No	Subpart QQQQ does not have opacity for

			visible emission standards.
§63.8(c)(6)	CMS Requirements	No	§63.4768 specifies the requirements for monitoring systems for capture systems and add-on control devices at sources using these to comply.
§63.8(c)(7)	CMS Out-of-Control Periods	Yes.	
§63.8(c)(8)	CMS Out-of-Control Periods Reporting	No	§63.4720 requires reporting of CMS out-of-control periods.
§63.8(d)–(e)	Quality Control Program and CMS Performance Evaluation	No	Subpart QQQQ does not require the use of continuous emissions monitoring systems.
§63.8(f)(1)–(5)	Use of an Alternative Monitoring Method	Yes.	
§63.8(f)(6)	Alternative to Relative Accuracy Test	No	Subpart QQQQ does not require the use of continuous emissions monitoring systems.
§63.8(g)(1)–(5)	Data Reduction	No	§§63.4767 and 63.4768 specify monitoring data reduction.
§63.9(a)–(d)	Notification Requirements	Yes.	
§63.9(e)	Notification of Performance Test	Yes	Applies only to capture system and add-on control device performance tests at sources using these to comply with the standard.
§63.9(f)	Notification of Visible Emissions/Opacity Test	No	Subpart QQQQ does not have opacity or visible emission standards.
§63.9(g)(1)–(3)	Additional Notifications When Using CMS	No	Subpart QQQQ does require the use of continuous emissions monitoring systems.
§63.9(h)	Notification of Compliance Status	Yes	§63.4710 specifies the dates for submitting the notification of compliance status.
§63.9(i)	Adjustment of Submittal Deadlines	Yes.	
§63.9(j)	Change in Previous Information	Yes.	
§63.10(a)	Recordkeeping/Reporting—Applicability and General Information	Yes.	
§63.10(b)(1)	General Recordkeeping Requirements	Yes	Additional requirements are specified in §§63.4730 and 63.4731.
§63.10(b)(2)(i)–(v)	Recordkeeping Relevant to SSM Periods and CMS	Yes	Requirements for SSM records only apply to add-on control devices used to comply with the standard.
§63.10(b)(2)(vi)–(xi)		Yes.	
§63.10(b)(2)(xii)	Records	Yes.	
§63.10(b)(2)(xiii)		No	Subpart QQQQ does not require the use of continuous emissions monitoring systems.
§63.10(b)(2)(xiv)		Yes.	
§63.10(b)(3)	Recordkeeping Requirements for Applicability Determinations	Yes.	
§63.10(c)(1)–(6)	Additional Recordkeeping Requirements	Yes.	

	for Sources with CMS		
§63.10(c)(7)–(8)		No	The same records are required in §63.4720(a) (7).
§63.10(c)(9)–(15)		Yes.	
§63.10(d)(1)	General Reporting Requirements	Yes	Additional requirements are specified in §63.4720.
§63.10(d)(2)	Report of Performance Test Results	Yes	Additional requirements are specified in §63.4720(b).
§63.10(d)(3)	Reporting Opacity or Visible Emissions Observations	No	Subpart QQQQ does not require opacity or visible emissions observations.
§63.10(d)(4)	Progress Reports for Sources With Compliance Extensions	Yes.	
§63.10(d)(5)	SSM Reports	Yes	Applies only to add-on control devices at sources using these to comply with the standard.
§63.10(e)(1)–(2)	Additional CMS Reports	No	Subpart QQQQ does not require the use of continuous emissions monitoring systems.
§63.10(e)(3)	Excess Emissions/CMS Performance Reports	No	§63.4720(b) specifies the contents of periodic compliance reports.
§63.10(e)(4)	COMS Data Reports	No	Subpart QQQQ does not specify requirements for opacity or COMS.
§63.10(f)	Recordkeeping/Reporting Waiver	Yes.	
§63.11	Control Device Requirements/Flares	No	Subpart QQQQ does not specify use of flares for compliance.
§63.12	State Authority and Delegations	Yes.	
§63.13	Addresses	Yes.	
§63.14	Incorporation by Reference	Yes	Test Methods ANSI/ASME PTC 19.10–1981, Part 10, ASTM D2697–86 (Reapproved 1998), and ASTM D6093–97 (incorporated by reference, see §63.14).
§63.15	Availability of Information/Confidentiality	Yes.	

Table 5 to Subpart QQQQ of Part 63—Default Organic HAP Mass Fraction for Solvents and Solvent Blends

You may use the mass fraction values in the following table for solvent blends for which you do not have test data or manufacturer's formulation data.

Solvent/solvent blend	CAS. No.	Average organic HAP mass fraction	Typical organic HAP, percent by mass
1. Toluene	108–88–3	1.0	Toluene.
2. Xylene(s)	1330–20–7	1.0	Xylenes, ethylbenzene.
3. Hexane	110–54–3	0.5	n-hexane.
4. n-Hexane	110–54–3	1.0	n-hexane.

5. Ethylbenzene	100–41–4	1.0	Ethylbenzene.
6. Aliphatic 140		0	None.
7. Aromatic 100		0.02	1% xylene, 1% cumene.
8. Aromatic 150		0.09	Naphthalene.
9. Aromatic naphtha	64742–95–6	0.02	1% xylene, 1% cumene.
10. Aromatic solvent	64742–94–5	0.1	Naphthalene.
11. Exempt mineral spirits	8032–32–4	0	None.
12. Ligroines (VM & P)	8032–32–4	0	None.
13. Lactol spirits	64742–89–6	0.15	Toluene.
14. Low aromatic white spirit	64742–82–1	0	None.
15. Mineral spirits	64742–88–7	0.01	Xylenes.
16. Hydrotreated naphtha	64742–48–9	0	None.
17. Hydrotreated light distillate	64742–47–8	0.001	Toluene.
18. Stoddard solvent	8052–41–3	0.01	Xylenes.
19. Super high-flash naphtha	64742–95–6	0.05	Xylenes.
20. Varsol®solvent	8052–49–3	0.01	0.5% xylenes, 0.5% ethylbenzene.
21. VM & P naphtha	64742–89–8	0.06	3% toluene, 3% xylene.
22. Petroleum distillate mixture	68477–31–6	0.08	4% naphthalene, 4% biphenyl.

Table 6 to Subpart QQQQ of Part 63—Default Organic HAP Mass Fraction for Petroleum Solvent Groups[a]

You may use the mass fraction values in the following table for solvent blends for which you do not have test data or manufacturer's formulation data.

Solvent type	Average organic HAP mass fraction	Typical organic HAP, percent by mass
Aliphatic[b]	0.03	1% xylene, 1% toluene, and 1% ethylbenzene.
Aromatic[c]	0.06	4% xylene, 1% toluene, and 1% ethylbenzene.

[a]Use this table only if the solvent blend does not match any of the solvent blends in Table 5 to this subpart and you only know whether the blend is aliphatic or aromatic.

[b] *E.g.,* Mineral Spirits 135, Mineral Spirits 150 EC, Naphtha, Mixed Hydrocarbon, Aliphatic Hydrocarbon, Aliphatic Naphtha, Naphthol Spirits, Petroleum Spirits, Petroleum Oil, Petroleum Naphtha, Solvent Naphtha, Solvent Blend.

[c] *E.g.,* Medium-flash Naphtha, High-flash Naphtha, Aromatic Naphtha, Light Aromatic Naphtha, Light Aromatic Hydrocarbons, Aromatic Hydrocarbons, Light Aromatic Solvent.

Browse Previous | Browse Next

For questions or comments regarding e-CFR editorial content, features, or design, email ecfr@nara.gov.

For questions concerning e-CFR programming and delivery issues, email webteam@gpo.gov.

Section 508 / Accessibility

Instructions for Form FRA

Item 4 & 5. It is important that facilities review the most recent federal regulations when submitting their permit application to DEQ. Current federal regulations can be found at the following Web site: http://ecfr.gpoaccess.gov/cgi/t/text/text-idx?&c=ecfr&tpl=/ecfrbrowse/Title40/40tab_02.tpl.

Item 6. For each applicable subpart identified under items 4-5 conduct a complete regulatory analysis. The facility must follow the procedure given below or obtain permission from DEQ to provide the necessary information using an alternative procedure:

1. Retrieve a TEXT or PDF copy of the applicable federal regulation subpart(s) online at http://www.gpoaccess.gov/cfr/retrieve.html
2. Copy and paste the regulation(s) into your DEQ air permit application.
3. Highlight or underline sections in the regulation(s) that are applicable to the source(s).
4. Under each section of the subpart, explain why the source is subject to the section, or why the source is not subject to the section. When providing the explanation use a different font than the regulation (i.e. ***bold, italic***) so that it is easy for the reader to determine the text that the applicant has provided. An example NSPS regulatory analysis is attached. The applicant must provide all necessary information needed to determine applicability. If information is lacking or the analysis is incomplete the application will be determined incomplete.

   EPA provides a web site dedicated to NSPS/NESHAP applicability determinations that may be useful to applicants. Follow this link to the applicability determination index Clean Air Act Applicability Determination Index - Compliance Monitoring - EPA. Another useful source of information is the preamble to the regulation which is published in the Federal Register on the date the regulation was promulgated. Federal Registers may be found online at Federal Register: Main Page. The date the regulation was published in the Federal Register is included in the footnotes of the regulation.
5. DEQ will assist in identifying the applicable requirements that the applicant must include in the application but will not perform the required technical or regulatory analysis on the applicant's behalf. Applicants should contact the Air Quality Permit Hotline (1-877-573-7648) to discuss NSPS/NESHAP regulatory analysis requirements or to schedule a meeting.
6. It also benefits facilities to document a non-applicability determination on federal air regulations which appear to apply to the facility but actually do not. A non-applicability determination will avoid future confusion and expedite the air permit application review. If you conduct an applicability determination and find that your activity is not NSPS or NESHAP affected facility an analysis should be submitted using the methods described above.
7. **It is not sufficient to simply provide a copy of the NSPS or NESHAP. The applicant must address each section of the regulation as described above and as shown in the example that is provided.**

EXAMPLE OF A NSPS REGULATORY ANALYSIS

[Title 40, Volume 6]
[Revised as of July 1, 2008]
From the U.S. Government Printing Office via GPO Access
[CITE: 40CFR60]

TITLE 40--PROTECTION OF ENVIRONMENT

CHAPTER I--ENVIRONMENTAL PROTECTION AGENCY (CONTINUED)

PART 60_STANDARDS OF PERFORMANCE FOR NEW STATIONARY SOURCES--
Table of Contents

Subpart H_Standards of Performance for Sulfuric Acid Plants

Sec.60.80 Applicability and designation of affected facility.

(a) The provisions of this subpart are applicable to each sulfuric acid production unit, which is the affected facility.
(b) Any facility under paragraph (a) of this section that commences construction or modification after August 17, 1971, is subject to the requirements of this subpart.

ACME Chemicals, Inc. is proposing to construct after August 17, 1971 a sulfuric acid plant which burns elemental sulfur as defined by 40 CFR 60.81(a). ACME is therefore affected by this subpart.

(Be sure to use the terms of the regulation to describe applicability; usually applicability is determined based on a specific date, definition of an affected facility, and rated input capacity. All of the applicability criteria must be addressed by the applicant.)

Note - if a determination of non-applicability is being submitted it is not necessary to address the remaining non-applicable regulatory sections. Be sure to provide the applicability determination in terms of the regulation (i.e. construction/modification date, rated input capacity, definition of affected facility).

Sec.60.81 Definitions.

As used in this subpart, all terms not defined herein shall have the meaning given them in the Act and in subpart A of this part.
(a) Sulfuric acid production unit means any facility producing sulfuric acid by the contact process by burning elemental sulfur, alkylation acid, hydrogen sulfide, organic sulfides and mercaptans, or acid sludge, but does not include facilities where conversion to sulfuric acid is utilized primarily as a means of preventing emissions to the atmosphere of sulfur dioxide or other sulfur compounds.
(b) Acid mist means sulfuric acid mist, as measured by Method 8 of appendix A to this part or an equivalent or alternative method.

ACME Chemicals, Inc. has read and understands these definitions and used them in providing this regulatory analysis.

Sec.60.82 Standard for sulfur dioxide.

(a) On and after the date on which the performance test required to be conducted by Sec.60.8 is completed, no owner or operator subject to the provisions of this subpart shall cause to be discharged into the atmosphere from any affected facility any gases which contain sulfur dioxide in excess of 2 kg per metric ton of acid produced (4 lb per ton), the production being expressed as 100 percent H2/SO4/.

ACME Chemicals, Inc. is subject to this standard and has provided a documented emission inventory (or manufacturer guarantee) which shows compliance.

Sec.60.83 Standard for acid mist.

(a) On and after the date on which the performance test required to be conducted by Sec.60.8 is completed, no owner or operator subject to the provisions of this subpart shall cause to be discharged into the atmosphere from any affected facility any gases which:

(1) Contain acid mist, expressed as H2/SO4/, in excess of 0.075 kg per metric ton of acid produced (0.15 lb per ton), the production being expressed as 100 percent H2/SO4/.

ACME Chemicals, Inc. is subject to this standard and has provided a documented emission inventory (or manufacturer guarantee) which shows compliance.

(2) Exhibit 10 percent opacity, or greater.

ACME Chemicals, Inc. understands that this will become a permit condition and has supplied a manufacturer guarantee that the sulfuric acid plant will comply with this standard.

Sec.60.84 Emission monitoring.

(a) A continuous monitoring system for the measurement of sulfur dioxide shall be installed, calibrated, maintained, and operated by the owner or operator. The pollutant gas used to prepare calibration gas mixtures under Performance Specification 2 and for calibration checks under Sec.60.13(d), shall be sulfur dioxide (SO2/). Method 8 shall be used for conducting monitoring system performance evaluations under Sec.60.13(c) except that only the sulfur dioxide portion of the Method 8 results shall be used. The span value shall be set at 1000 ppm of sulfur dioxide.

(b) The owner or operator shall establish a conversion factor for the purpose of converting monitoring data into units of the applicable standard (kg/metric ton, lb/ton). The conversion factor shall be determined, as a minimum, three times daily by measuring the concentration of sulfur dioxide entering the converter using suitable methods (e.g., the Reich test, National Air Pollution Control Administration Publication No. 999-AP-13) and calculating the appropriate conversion factor for each eight-hour period as follows:

$$CF=k[(1.000-0.015r)/(r-s)]$$

where:

CF=conversion factor (kg/metric ton per ppm, lb/ton per ppm).
k=constant derived from material balance. For determining CF in metric units, k=0.0653. For determining CF in English units, k=0.1306.
r=percentage of sulfur dioxide by volume entering the gas converter. Appropriate corrections must be made for air injection plants subject to the Administrator's approval.
s=percentage of sulfur dioxide by volume in the emissions to the atmosphere determined by the continuous monitoring system required under paragraph (a) of this section.

(c) The owner or operator shall record all conversion factors and values under paragraph (b) of this section from which they were computed (i.e., CF, r, and s).

ACME Chemicals, Inc. is not proposing to utilize Sections 60.84(a)-(c)listed above to monitor emissions. Instead ACME Chemicals is utilizing 40 CFR 60.84(d) listed below to monitor emissions of sulfur dioxide.

(d) Alternatively, a source that processes elemental sulfur or an ore that contains elemental sulfur and uses air to supply oxygen may use the following continuous emission monitoring approach and calculation procedures in determining SO2/ emission rates in terms of the standard. This procedure is not required, but is an alternative that would alleviate problems encountered in the measurement of gas velocities or production rate. Continuous emission monitoring systems for measuring SO2/, O2/, and CO2/ (if required) shall be installed, calibrated, maintained, and operated by the owner or operator and subjected to the certification procedures in Performance Specifications 2 and 3. The calibration procedure and span value for the SO2/ monitor shall be as specified in paragraph (b) of this section. The span value for CO2/ (if required) shall be 10 percent and for O2/ shall be 20.9 percent (air). A conversion factor based on process rate data is not necessary. Calculate the SO2/ emission rate as follows:

Es/=(Cs/ S)/[0.265-(0.126 %O2/)-(A %CO2/)]

where:

Es/=emission rate of SO2/, kg/metric ton (lb/ton) of 100 percent of H2/SO4/ produced.
Cs/=concentration of SO2/, kg/dscm (lb/dscf).
S=acid production rate factor, 368 dscm/metric ton (11,800 dscf/ton) of 100 percent H2/SO4/ produced.
%O2/=oxygen concentration, percent dry basis.
A=auxiliary fuel factor,
=0.00 for no fuel.
=0.0226 for methane.
=0.0217 for natural gas.
=0.0196 for propane.
=0.0172 for No 2 oil.
=0.0161 for No 6 oil.
=0.0148 for coal.
=0.0126 for coke.
%CO2/= carbon dioxide concentration, percent dry basis.

Note: It is necessary in some cases to convert measured concentration units to other units for these calculations:

Use the following table for such conversions:

From--	To--	Multiply by--
g/scm.....	kg/scm.....	10-3
mg/scm.....	kg/scm.....	10-6
ppm (SO2).....	kg/scm.....	2.660x10-6
ppm (SO2).....	lb/scf.....	1.660x10-7

ACME Chemicals, Inc. has elected to use the monitoring requirements of the preceding section.

(e) For the purpose of reports under Sec.60.7(c), periods of excess emissions shall be all three-hour periods (or the arithmetic average of three consecutive one-hour periods) during which the integrated average sulfur dioxide emissions exceed the applicable standards under Sec.60.82.

ACME acknowledges that this section applies to the sulfuric acid plant.

Sec.60.85 Test methods and procedures.

(a) In conducting the performance tests required in Sec.60.8, the owner or operator shall use as reference methods and procedures the test methods in appendix A of this part or other methods and procedures as specified in this section, except as provided in Sec.60.8(b). Acceptable alternative methods and procedures are given in paragraph (c) of this section.

(b) The owner or operator shall determine compliance with the SO2/ acid mist, and visible emission standards in Sec. Sec. 60.82 and 60.83 as follows:

(1) The emission rate (E) of acid mist or SO2/ shall be computed for each run using the following equation:

E=(CQsd/)/(PK)

where:

E=emission rate of acid mist or SO2/ kg/metric ton (lb/ton) of 100 percent H2/SO4/ produced.
C=concentration of acid mist or SO2/, g/dscm (lb/dscf).
Qsd/=volumetric flow rate of the effluent gas, dscm/hr (dscf/hr).
P=production rate of 100 percent H2/SO4/, metric ton/hr (ton/hr).
K=conversion factor, 1000 g/kg (1.0 lb/lb).

(2) Method 8 shall be used to determine the acid mist and SO2/ concentrations (C's) and the volumetric flow rate (Qsd/) of the effluent gas. The moisture content may be considered to be zero. The sampling time and sample volume for each run shall be at least 60 minutes and 1.15 dscm (40.6 dscf).

(3) Suitable methods shall be used to determine the production rate (P) of 100 percent H2/SO4/ for each run. Material balance over the production system shall be used to confirm the production rate.

(4) Method 9 and the procedures in Sec.60.11 shall be used to determine opacity.

(c) The owner or operator may use the following as alternatives to

the reference methods and procedures specified in this section:

(1) If a source processes elemental sulfur or an ore that contains elemental sulfur and uses air to supply oxygen, the following procedure may be used instead of determining the volumetric flow rate and production rate:

(i) The integrated technique of Method 3 is used to determine the O2/ concentration and, if required, CO2/ concentration.

(ii) The SO2/ or acid mist emission rate is calculated as described in Sec.60.84(d), substituting the acid mist concentration for Cs/ as appropriate.

ACME Chemicals, Inc. acknowledges that performance tests shall be conducted as specified above.

woodgrain millwork

January 31, 2008
Via Certified Mail, Return Receipt Requested

Director
Office of Air Quality
EPA Region 10 1200 Sixth Avenue (OAQ-l 07)
Seattle, WA 98101

Re: Woodgrain Millwork, Inc., Fruitland, ID
40 CFR Part 63, Subpart QQQQ - Compliance Reporting – Second half 2007 Semi-annual Report

Dear Director,

The intent of this letter is to provide our semiannual compliance report.

Our facility falls under SIC codes 2431(Millwork), 2491 (Wood preserving, and a very small portion of the plant has been interpreted to include SIC code 2754 (Gravure printing). Subpart QQQQ SURFACE COATING OF WOOD BUILDING PRODUCTS applies to various operations at this facility

Semi-annual Report

Woodgrain Millwork - Fruitland has been in continuous compliance with 40 CFR Part 63 Subpart QQQQ for this reporting period. Compliance is demonstrated by using the method described in 40 CFR Part 63 Subpart QQQQ Section 63.4691 Emission Rate without add-on Controls.

Please note, the calculations conservatively reflect *all* HAPs applied by coatings operations are in compliance with QQQQ.

I certify that, based on information and belief formed after reasonable inquiry, the statements and information in the document and the attachments are true, accurate, and complete.

Sincerely,

Stephen Coe
Corporate Environmental Health and Safety Manager

cc: Air Quality Permit Compliance, Idaho DEQ, Boise Regional Office

P.O. Box 566 • 300 NW 16th Street • Fruitland, Idaho 83619 • Tel 208.452.3801 • Fax 208.452.3800 •
www.woodgrain.com

NESHAP QQQQ Semiannual Report

Year 2007 **Half** Second

Department 6/4

Woodgrain Item Number	Description/Trade Name	lbs HAPs / gal Solids Applied	Quantity Used (gallons)	HAPs Applied (pounds)	Solids Applied (gallons)
X-PAI-10505	OFF WHITE MILLWORK PRIMER	0.00000	3185.96491	0.00000	1561.12281
X-PAI-10-532	WHITE PRIMER/TOPCOAT	0.00000	303.65217	0.00000	151.82609
Totals		0.00000	3489.61709	0.00000	1712.94889

Department Basecoat

Woodgrain Item Number	Description/Trade Name	lbs HAPs / gal Solids Applied	Quantity Used (gallons)	HAPs Applied (pounds)	Solids Applied (gallons)
01031	THINNER BLEND	0.00000	8573.00000	0.00000	0.00000
7219	DEFOAMER/BUBBLE BREAKER	0.00000	110.00000	0.00000	30.80000
ALCOHOLVANZO	ALCOHOL VANZOL	0.00000	15.00000	5.14800	0.00000
CHE-DAP	REPAIR PUTTY	0.00000	0.08000	0.00000	0.08000
E60WL510	ACRYLIC WHITE PRIMER	0.00000	1306.00000	0.00000	587.70000
E60WL563	MILLWORK OFF WHITE PRIMER	0.00000	4483.08943	0.00000	1748.40488
P63YL0002	HAPS COMPLIANT NUTRACOAT	1.51324	3558.00000	1098.35460	725.83200
P65BL1	BASECOAT BLACK	1.83078	246.00000	97.73088	53.38200
P65RH39	BRIGHT RED	16.01600	50.00000	120.12000	7.50000
P65RL0001	HAPS COMPLIANT RED OXIDE	1.42800	1272.00000	417.77568	292.56000
P65WL0004	HAPS COMPLIANT WHITE	1.74400	6900.00000	3128.73600	1794.00000
P65YL0001	HAPS COMPLIANT YELLOW OXIDE	1.40875	2617.00000	884.80770	628.08000
P65YL2	BASECOAT BRITE YELLOW	1.56400	159.00000	64.65576	41.34000
RESIND	RESIND	0.00003	1260.91703	0.01155	378.27511
T67F6	FAST DRY VINYL SEALER	0.00000	5.00000	0.00000	0.75000
X-CHEM-ISOPROP	ISOPROPYL ALCOHOL	0.00000	170.00000	0.00000	0.00000
Totals		0.92505	30725.08646	5817.34017	6288.70399

Department Emboss

Woodgrain Item Number	Description/Trade Name	lbs HAPs / gal Solids Applied	Quantity Used (gallons)	HAPs Applied (pounds)	Solids Applied (gallons)
S61B500	STAIN CONCENTRATE, BLK	0.00000	1.00000	0.00000	0.17000
Totals		0.00000	1.00000	0.00000	0.17000

Department Stain

Woodgrain Item Number	Description/Trade Name	lbs HAPs / gal Solids Applied	Quantity Used (gallons)	HAPs Applied (pounds)	Solids Applied (gallons)
X-PAI-8242912	W/B SPRAY STAIN BASE	0.04079	85.00000	0.21497	5.27000
X-PAI-C896YO-1Q	WATER BASE YELLOW OXIDE COL	0.00000	2.00000	0.00000	0.70000
X-PAI-CHC431-430	5 SHEEN TOPCOAT	0.17857	55.00000	3.43750	19.25000
X-PAI-CHC431-431	10 SHEEN TOPCOAT	0.00000	50.00000	0.00000	17.50000
XPAICHC43143215	CHEMSHIELD LOW GLOSS	3.90922	595.00000	469.38360	120.07100
X-PAI-CHC873-122	CATALYST	1.71429	4.00000	2.40000	1.40000
X-PAI-LC896BU-1	WATER BASE BURNT UMBER	0.00000	4.00000	0.00000	1.40000
XPAIZ021601	BROWN GLAZE	1.03802	78.00000	5.06844	4.88280
Totals		2.81864	873.00000	480.50451	170.47380

Department Windows

Woodgrain Item Number	Description/Trade Name	lbs HAPs / gal Solids Applied	Quantity Used (gallons)	HAPs Applied (pounds)	Solids Applied (gallons)
X-CHEM-EXXSOL	MINERAL SPIRITS-HYDRATED	0.00000	32266.48053	0.41604	0.00000
X-CHEM-WOODLI	WATER REPELENT WOOD PERSERVATIV	0.00000	5412.87671	0.00000	2706.43836
Totals		0.00015	37679.35725	0.41604	2706.43836

Department Wrap

Woodgrain Item Number	Description/Trade Name	lbs HAPs / gal Solids Applied	Quantity Used (gallons)	HAPs Applied (pounds)	Solids Applied (gallons)
2H850	HOT MELT CHICKLETS	0.00007	6165.69767	0.42420	6165.69767
43362	SWIFTHERM 43362	0.00000	1487.99520	0.00000	1487.99520
89056	FORBO ADVANTAGE 89056	0.00000	137.07572	0.00000	137.07572
PA285	AQUEOUS ADHESIVE	0.00000	52.92172	0.00000	37.04520
PA310	AQUEOUS ADHESIVE	0.00000	4654.76190	0.00000	2792.85714
Totals		0.00004	12498.45222	0.42420	10620.67094
Overall Totals		0.29297	85266.51301	6298.68492	21499.40597

NESHAP QQQQ Twelve Month Rolling Average Report

Beginning Month August - 2006 **Ending Month** July - 2007

Department 6/4

Woodgrain Item Number	Description/Trade Name	lbs HAPs / gal Solids Applied	Quantity Used (gallons)	HAPs Applied (pounds)	Solids Applied (gallons)
10532	WHITE PRIMER/TOPCOAT	0.00000	1561.21739	0.00000	780.60870
E60WV504	ACRYLIC MILLWORK PRIMER	0.00000	4678.56580	0.00000	1964.99764
X-PAI-10505	OFF WHITE MILLWORK PRIMER	0.00000	7047.57895	0.00000	3453.31368
Totals		0.00000	13287.36214	0.00000	6198.92002

Department Basecoat

Woodgrain Item Number	Description/Trade Name	lbs HAPs / gal Solids Applied	Quantity Used (gallons)	HAPs Applied (pounds)	Solids Applied (gallons)
01031	THINNER BLEND	0.00000	17543.00000	0.00000	0.00000
7219	DEFOAMER/BUBBLE BREAKER	0.00000	135.00000	0.00000	37.80000
CHE-DAP	REPAIR PUTTY	0.00000	3.20000	0.00000	3.20000
E60WL510	ACRYLIC WHITE PRIMER	0.00000	2100.00000	0.00000	945.00000
OK412	SILICA GEL, ORGANIC COATED	0.00000	100.00000	0.00000	100.00000
P63YL0002	HAPS COMPLIANT NUTRACOAT	1.51324	8388.00000	2589.37560	1711.15200
P65BL1	BASECOAT BLACK	1.83078	315.00000	125.14320	68.35500
P65RH39	BRIGHT RED	16.01600	55.00000	132.13200	8.25000
P65RL0001	HAPS COMPLIANT RED OXIDE	1.42800	2344.00000	769.86336	539.12000
P65WL0004	HAPS COMPLIANT WHITE	1.74400	15694.00000	7116.28736	4080.44000
P65YL0001	HAPS COMPLIANT YELLOW OXIDE	1.40875	3936.00000	1330.76160	944.64000
P65YL2	BASECOAT BRITE YELLOW	1.56400	530.00000	215.51920	137.80000
RESIND	RESIND	0.00003	756.55022	0.00693	226.96507
T67F6	FAST DRY VINYL SEALER	0.00000	111.00000	0.00000	16.65000
Totals		1.39229	52010.75022	12279.08925	8819.37207

Department Emboss

Woodgrain Item Number	Description/Trade Name	lbs HAPs / gal Solids Applied	Quantity Used (gallons)	HAPs Applied (pounds)	Solids Applied (gallons)
S61R503	UNIVERSAL STAIN RED	0.00000	9.00000	0.00000	2.16000
S61Y504	UNIVERSAL DYE STAIN CONCENTRATE	0.00000	24.00000	0.00000	5.04000
Totals		0.00000	33.00000	0.00000	7.20000

Department Stain

Woodgrain Item Number	Description/Trade Name	lbs HAPs / gal Solids Applied	Quantity Used (gallons)	HAPs Applied (pounds)	Solids Applied (gallons)
5459070	WHITE PRE-CAT PRIMER	0.88203	6.00000	1.56967	1.77960
XPAICHC43143215	CHEMSHIELD LOW GLOSS	3.90922	90.00000	70.99920	18.16200
X-PAI-CHC522-141	PLASTIPRIMER WHITE	0.49966	6.00000	1.04928	2.10000
X-PAI-CHC870-120	FLATTENING PASTE	9.35000	1.00000	1.40250	0.15000
XPAICHC87308701	CATALYST	0.00000	10.00000	0.00000	1.04700
X-PAI-L-C844BU-1	BURNT UMBER COLORANT	2.34281	1.00000	0.93713	0.40000
X-PAI-L-C844LB-1	LAMP BLACK	0.00000	1.00000	0.00000	0.35000
X-PAI-L-C844MY-	MEDIUM YELLOW COLORANT	0.00000	1.00000	0.00000	0.35000
X-PAI-L-C844QR-1	QUINACRIDONE RED COLORANT	0.00000	1.00000	0.00000	0.35000
X-PAI-L-C844RO-1	RED OXIDE COLORANT	0.00000	1.00000	0.00000	0.35000
X-PAI-L-C844RU-1	RAW UMBER COLORANT	2.49900	1.00000	0.87465	0.35000
X-PAI-L-C844TW-1	TITANIUM WHITE COLORANT	0.00000	1.00000	0.00000	0.35000
X-PAI-L-C844YO-1	YELLOW OXIDE COLORANT	1.08130	1.00000	0.66500	0.61500
XPAIZ021601	BROWN GLAZE	1.03802	2.00000	0.12996	0.12520
Totals		2.93168	123.00000	77.62738	26.47880

Department Windows

Woodgrain Item Number	Description/Trade Name	lbs HAPs / gal Solids Applied	Quantity Used (gallons)	HAPs Applied (pounds)	Solids Applied (gallons)
X-CHEM-CB	COOL BLUE GLUE BARRIER	0.00000	750.00000	0.00000	712.50000
X-CHEM-EXXSOL	MINERAL SPIRITS-HYDRATED	0.00000	59877.83713	0.77206	0.00000
X-CHEM-WOODLI	WATER REPELENT WOOD PERSERVATIV	0.00000	8438.28767	0.00000	4219.14384
Totals		0.00016	69066.12480	0.77206	4931.64384

Department Wrap

Woodgrain Item Number	Description/Trade Name	lbs HAPs / gal Solids Applied	Quantity Used (gallons)	HAPs Applied (pounds)	Solids Applied (gallons)
2H850	HOT MELT CHICKLETS	0.00007	14755.81395	1.01520	14755.81395
43362	SWIFTHERM 43362	0.00000	3075.99040	0.00000	3075.99040
89056	FORBO ADVANTAGE 89056	0.00000	156.65796	0.00000	156.65796
M768PEL	HOT MELT ADHESIVE	0.00000	1572.41379	0.00000	1572.41379
PA285	AQUEOUS ADHESIVE	0.00000	317.53032	0.00000	222.27122
PA310	AQUEOUS ADHESIVE	0.00000	9583.33333	0.00000	5750.00000
Totals		0.00004	29461.73976	1.01520	25533.14733

Facility Totals	0.27152	163981.97692	12358.50390	45516.76205

NESHAP QQQQ Twelve Month Rolling Average Report

Beginning Month September - 2006 **Ending Month** August - 2007

Department 6/4

Woodgrain Item Number	Description/Trade Name	lbs HAPs / gal Solids Applied	Quantity Used (gallons)	HAPs Applied (pounds)	Solids Applied (gallons)
10532	WHITE PRIMER/TOPCOAT	0.00000	1561.21739	0.00000	780.60870
E60WV504	ACRYLIC MILLWORK PRIMER	0.00000	3852.95508	0.00000	1618.24113
X-PAI-10505	OFF WHITE MILLWORK PRIMER	0.00000	7007.43860	0.00000	3433.64491
Totals		0.00000	12421.61107	0.00000	5832.49474

Department Basecoat

Woodgrain Item Number	Description/Trade Name	lbs HAPs / gal Solids Applied	Quantity Used (gallons)	HAPs Applied (pounds)	Solids Applied (gallons)
01031	THINNER BLEND	0.00000	15407.00000	0.00000	0.00000
7219	DEFOAMER/BUBBLE BREAKER	0.00000	190.00000	0.00000	53.20000
CHE-DAP	REPAIR PUTTY	0.00000	2.80000	0.00000	2.80000
E60WL510	ACRYLIC WHITE PRIMER	0.00000	2282.00000	0.00000	1026.90000
E60WL563	MILLWORK OFF WHITE PRIMER	0.00000	1419.67480	0.00000	553.67317
OK412	SILICA GEL, ORGANIC COATED	0.00000	100.00000	0.00000	100.00000
P63YL0002	HAPS COMPLIANT NUTRACOAT	1.51324	8008.00000	2472.06960	1633.63200
P65BL1	BASECOAT BLACK	1.83078	368.00000	146.19904	79.85600
P65RH39	BRIGHT RED	16.01600	55.00000	132.13200	8.25000
P65RL0001	HAPS COMPLIANT RED OXIDE	1.42800	2415.00000	793.18260	555.45000
P65WL0004	HAPS COMPLIANT WHITE	1.74400	15257.00000	6918.13408	3966.82000
P65YL0001	HAPS COMPLIANT YELLOW OXIDE	1.40875	3673.00000	1241.84130	881.52000
P65YL2	BASECOAT BRITE YELLOW	1.56400	530.00000	215.51920	137.80000
RESIND	RESIND	0.00003	1008.73362	0.00924	302.62009
T67F6	FAST DRY VINYL SEALER	0.00000	111.00000	0.00000	16.65000
Totals		1.27899	50827.20842	11919.08706	9319.17126

Department Emboss

Woodgrain Item Number	Description/Trade Name	lbs HAPs / gal Solids Applied	Quantity Used (gallons)	HAPs Applied (pounds)	Solids Applied (gallons)
S61R503	UNIVERSAL STAIN RED	0.00000	9.00000	0.00000	2.16000
S61Y504	UNIVERSAL DYE STAIN CONCENTRATE	0.00000	24.00000	0.00000	5.04000

Totals		0.00000	33.00000	0.00000	7.20000

Department Stain

Woodgrain Item Number	Description/Trade Name	lbs HAPs / gal Solids Applied	Quantity Used (gallons)	HAPs Applied (pounds)	Solids Applied (gallons)
5459070	WHITE PRE-CAT PRIMER	0.88203	6.00000	1.56967	1.77960
X-PAI-8242912	W/B SPRAY STAIN BASE	0.04079	40.00000	0.10116	2.48000
XPAICHC43143215	CHEMSHIELD LOW GLOSS	3.90922	195.00000	153.83160	39.35100
X-PAI-CHC522-141	PLASTIPRIMER WHITE	0.49966	6.00000	1.04928	2.10000
X-PAI-CHC870-120	FLATTENING PASTE	9.35000	1.00000	1.40250	0.15000
XPAICHC87308701	CATALYST	0.00000	10.00000	0.00000	1.04700
X-PAI-L-C844BU-1	BURNT UMBER COLORANT	2.34281	1.00000	0.93713	0.40000
X-PAI-L-C844LB-1	LAMP BLACK	0.00000	1.00000	0.00000	0.35000
X-PAI-L-C844MY-	MEDIUM YELLOW COLORANT	0.00000	1.00000	0.00000	0.35000
X-PAI-L-C844QR-1	QUINACRIDONE RED COLORANT	0.00000	1.00000	0.00000	0.35000
X-PAI-L-C844RO-1	RED OXIDE COLORANT	0.00000	1.00000	0.00000	0.35000
X-PAI-L-C844RU-1	RAW UMBER COLORANT	2.49900	1.00000	0.87465	0.35000
X-PAI-L-C844TW-1	TITANIUM WHITE COLORANT	0.00000	1.00000	0.00000	0.35000
X-PAI-L-C844YO-1	YELLOW OXIDE COLORANT	1.08130	1.00000	0.66500	0.61500
XPAIZ021601	BROWN GLAZE	1.03802	6.00000	0.38988	0.37560
Totals		3.19100	272.00000	160.82086	50.39820

Department Windows

Woodgrain Item Number	Description/Trade Name	lbs HAPs / gal Solids Applied	Quantity Used (gallons)	HAPs Applied (pounds)	Solids Applied (gallons)
X-CHEM-CB	COOL BLUE GLUE BARRIER	0.00000	750.00000	0.00000	712.50000
X-CHEM-EXXSOL	MINERAL SPIRITS-HYDRATED	0.00000	59059.78222	0.76152	0.00000
X-CHEM-WOODLI	WATER REPELENT WOOD PERSERVATIV	0.00000	9204.31507	0.00000	4602.15753
Totals		0.00014	69014.09729	0.76152	5314.65753

Department Wrap

Woodgrain Item Number	Description/Trade Name	lbs HAPs / gal Solids Applied	Quantity Used (gallons)	HAPs Applied (pounds)	Solids Applied (gallons)
2H850	HOT MELT CHICKLETS	0.00007	13947.67442	0.95960	13947.67442
43362	SWIFTHERM 43362	0.00000	3328.09124	0.00000	3328.09124
M768PEL	HOT MELT ADHESIVE	0.00000	965.51724	0.00000	965.51724
PA285	AQUEOUS ADHESIVE	0.00000	317.53032	0.00000	222.27122
PA310	AQUEOUS ADHESIVE	0.00000	9309.52381	0.00000	5585.71429

Totals	0.00004	27868.33703	0.95960	24049.26841
Facility Totals	0.27105	160436.25381	12081.62904	44573.19014

NESHAP QQQQ Twelve Month Rolling Average Report

Beginning Month October - 2006 **Ending Month** September - 2007

Department 6/4

Woodgrain Item Number	Description/Trade Name	lbs HAPs / gal Solids Applied	Quantity Used (gallons)	HAPs Applied (pounds)	Solids Applied (gallons)
10532	WHITE PRIMER/TOPCOAT	0.00000	1561.21739	0.00000	780.60870
E60WV504	ACRYLIC MILLWORK PRIMER	0.00000	1926.47754	0.00000	809.12057
X-PAI-10505	OFF WHITE MILLWORK PRIMER	0.00000	7867.50877	0.00000	3855.07930
X-PAI-10-532	WHITE PRIMER/TOPCOAT	0.00000	303.65217	0.00000	151.82609
Totals		0.00000	11658.85588	0.00000	5596.63465

Department Basecoat

Woodgrain Item Number	Description/Trade Name	lbs HAPs / gal Solids Applied	Quantity Used (gallons)	HAPs Applied (pounds)	Solids Applied (gallons)
01031	THINNER BLEND	0.00000	16056.00000	0.00000	0.00000
7219	DEFOAMER/BUBBLE BREAKER	0.00000	120.00000	0.00000	33.60000
ALCOHOLVANZO	ALCOHOL VANZOL	0.00000	5.00000	1.71600	0.00000
CHE-DAP	REPAIR PUTTY	0.00000	2.16000	0.00000	2.16000
E60WL510	ACRYLIC WHITE PRIMER	0.00000	1876.00000	0.00000	844.20000
E60WL563	MILLWORK OFF WHITE PRIMER	0.00000	2555.44715	0.00000	996.62439
OK412	SILICA GEL, ORGANIC COATED	0.00000	100.00000	0.00000	100.00000
P63YL0002	HAPS COMPLIANT NUTRACOAT	1.51324	7553.00000	2331.61110	1540.81200
P65BL1	BASECOAT BLACK	1.83078	315.00000	125.14320	68.35500
P65RH39	BRIGHT RED	16.01600	55.00000	132.13200	8.25000
P65RL0001	HAPS COMPLIANT RED OXIDE	1.42800	2256.00000	740.96064	518.88000
P65WL0004	HAPS COMPLIANT WHITE	1.74400	15005.00000	6803.86720	3901.30000
P65YL0001	HAPS COMPLIANT YELLOW OXIDE	1.40875	3371.00000	1139.73510	809.04000
P65YL2	BASECOAT BRITE YELLOW	1.56400	530.00000	215.51920	137.80000
RESIND	RESIND	0.00003	1765.28384	0.01617	529.58515
T67F6	FAST DRY VINYL SEALER	0.00000	111.00000	0.00000	16.65000
X-CHEM-ISOPROP	ISOPROPYL ALCOHOL	0.00000	115.00000	0.00000	0.00000
Totals		1.20862	51790.89100	11490.70061	9507.25654

Department Emboss

Woodgrain Item Number	Description/Trade Name	lbs HAPs / gal Solids Applied	Quantity Used (gallons)	HAPs Applied (pounds)	Solids Applied (gallons)
S61R503	UNIVERSAL STAIN RED	0.00000	9.00000	0.00000	2.16000
S61Y504	UNIVERSAL DYE STAIN CONCENTRATE	0.00000	24.00000	0.00000	5.04000
Totals		0.00000	33.00000	0.00000	7.20000

Department Stain

Woodgrain Item Number	Description/Trade Name	lbs HAPs / gal Solids Applied	Quantity Used (gallons)	HAPs Applied (pounds)	Solids Applied (gallons)
5459070	WHITE PRE-CAT PRIMER	0.88203	6.00000	1.56967	1.77960
X-PAI-8242912	W/B SPRAY STAIN BASE	0.04079	40.00000	0.10116	2.48000
XPAICHC43143215	CHEMSHIELD LOW GLOSS	3.90922	320.00000	252.44160	64.57600
X-PAI-CHC522-141	PLASTIPRIMER WHITE	0.49966	6.00000	1.04928	2.10000
X-PAI-CHC870-120	FLATTENING PASTE	9.35000	1.00000	1.40250	0.15000
XPAICHC87308701	CATALYST	0.00000	10.00000	0.00000	1.04700
X-PAI-L-C844BU-1	BURNT UMBER COLORANT	2.34281	1.00000	0.93713	0.40000
X-PAI-L-C844LB-1	LAMP BLACK	0.00000	1.00000	0.00000	0.35000
X-PAI-L-C844MY-	MEDIUM YELLOW COLORANT	0.00000	1.00000	0.00000	0.35000
X-PAI-L-C844QR-1	QUINACRIDONE RED COLORANT	0.00000	1.00000	0.00000	0.35000
X-PAI-L-C844RO-1	RED OXIDE COLORANT	0.00000	1.00000	0.00000	0.35000
X-PAI-L-C844RU-1	RAW UMBER COLORANT	2.49900	1.00000	0.87465	0.35000
X-PAI-L-C844TW-1	TITANIUM WHITE COLORANT	0.00000	1.00000	0.00000	0.35000
X-PAI-L-C844YO-1	YELLOW OXIDE COLORANT	1.08130	1.00000	0.66500	0.61500
X-PAI-LC896BU-1	WATER BASE BURNT UMBER	0.00000	2.00000	0.00000	0.70000
XPAIZ021601	BROWN GLAZE	1.03802	50.00000	3.24900	3.13000
Totals		3.31687	443.00000	262.28998	79.07760

Department Windows

Woodgrain Item Number	Description/Trade Name	lbs HAPs / gal Solids Applied	Quantity Used (gallons)	HAPs Applied (pounds)	Solids Applied (gallons)
X-CHEM-CB	COOL BLUE GLUE BARRIER	0.00000	750.00000	0.00000	712.50000
X-CHEM-EXXSOL	MINERAL SPIRITS-HYDRATED	0.00000	58928.09307	0.75982	0.00000
X-CHEM-WOODLI	WATER REPELENT WOOD PERSERVATIV	0.00000	9926.78082	0.00000	4963.39041
Totals		0.00013	69604.87389	0.75982	5675.89041

Department Wrap

Woodgrain Item Number	Description/Trade Name	lbs HAPs / gal Solids Applied	Quantity Used (gallons)	HAPs Applied (pounds)	Solids Applied (gallons)
2H850	HOT MELT CHICKLETS	0.00007	13834.30233	0.95180	13834.30233
43362	SWIFTHERM 43362	0.00000	3334.45378	0.00000	3334.45378
M768PEL	HOT MELT ADHESIVE	0.00000	358.62069	0.00000	358.62069
PA285	AQUEOUS ADHESIVE	0.00000	317.53032	0.00000	222.27122
PA310	AQUEOUS ADHESIVE	0.00000	9035.71429	0.00000	5421.42857
Totals		0.00004	26880.62140	0.95180	23171.07659
Facility Totals		0.26693	160411.24217	11754.70221	44037.13579

NESHAP QQQQ Twelve Month Rolling Average Report

Beginning Month November - 2006 **Ending Month** October - 2007

Department 6/4

Woodgrain Item Number	Description/Trade Name	lbs HAPs / gal Solids Applied	Quantity Used (gallons)	HAPs Applied (pounds)	Solids Applied (gallons)
10532	WHITE PRIMER/TOPCOAT	0.00000	1194.86957	0.00000	597.43478
E60WV504	ACRYLIC MILLWORK PRIMER	0.00000	825.61072	0.00000	346.75650
X-PAI-10505	OFF WHITE MILLWORK PRIMER	0.00000	8139.29825	0.00000	3988.25614
X-PAI-10-532	WHITE PRIMER/TOPCOAT	0.00000	303.65217	0.00000	151.82609
Totals		0.00000	10463.43070	0.00000	5084.27351

Department Basecoat

Woodgrain Item Number	Description/Trade Name	lbs HAPs / gal Solids Applied	Quantity Used (gallons)	HAPs Applied (pounds)	Solids Applied (gallons)
01031	THINNER BLEND	0.00000	15683.00000	0.00000	0.00000
7219	DEFOAMER/BUBBLE BREAKER	0.00000	120.00000	0.00000	33.60000
ALCOHOLVANZO	ALCOHOL VANZOL	0.00000	15.00000	5.14800	0.00000
CHE-DAP	REPAIR PUTTY	0.00000	2.16000	0.00000	2.16000
E60WL510	ACRYLIC WHITE PRIMER	0.00000	1761.00000	0.00000	792.45000
E60WL563	MILLWORK OFF WHITE PRIMER	0.00000	4483.08943	0.00000	1748.40488
P63YL0002	HAPS COMPLIANT NUTRACOAT	1.51324	8158.00000	2518.37460	1664.23200
P65BL1	BASECOAT BLACK	1.83078	349.00000	138.65072	75.73300
P65RH39	BRIGHT RED	16.01600	55.00000	132.13200	8.25000
P65RL0001	HAPS COMPLIANT RED OXIDE	1.42800	2226.00000	731.10744	511.98000
P65WL0004	HAPS COMPLIANT WHITE	1.74400	15005.00000	6803.86720	3901.30000
P65YL0001	HAPS COMPLIANT YELLOW OXIDE	1.40875	4055.00000	1370.99550	973.20000
P65YL2	BASECOAT BRITE YELLOW	1.56400	477.00000	193.96728	124.02000
RESIND	RESIND	0.00003	1513.10044	0.01386	453.93013
T67F6	FAST DRY VINYL SEALER	0.00000	111.00000	0.00000	16.65000
X-CHEM-ISOPROP	ISOPROPYL ALCOHOL	0.00000	115.00000	0.00000	0.00000
Totals		1.15412	54128.34987	11894.25660	10305.91001

Department Emboss

Woodgrain Item Number	Description/Trade Name	lbs HAPs / gal Solids Applied	Quantity Used (gallons)	HAPs Applied (pounds)	Solids Applied (gallons)

S61R503	UNIVERSAL STAIN RED	0.00000	6.00000	0.00000	1.44000
S61Y504	UNIVERSAL DYE STAIN CONCENTRATE	0.00000	18.00000	0.00000	3.78000
Totals		0.00000	24.00000	0.00000	5.22000

Department Stain

Woodgrain Item Number	Description/Trade Name	lbs HAPs / gal Solids Applied	Quantity Used (gallons)	HAPs Applied (pounds)	Solids Applied (gallons)
5459070	WHITE PRE-CAT PRIMER	0.88203	6.00000	1.56967	1.77960
X-PAI-8242912	W/B SPRAY STAIN BASE	0.04079	80.00000	0.20232	4.96000
X-PAI-C896YO-1Q	WATER BASE YELLOW OXIDE COL	0.00000	2.00000	0.00000	0.70000
X-PAI-CHC431-431	10 SHEEN TOPCOAT	0.00000	50.00000	0.00000	17.50000
XPAICHC43143215	CHEMSHIELD LOW GLOSS	3.90922	455.00000	358.94040	91.81900
X-PAI-CHC522-141	PLASTIPRIMER WHITE	0.49966	6.00000	1.04928	2.10000
X-PAI-CHC870-120	FLATTENING PASTE	9.35000	1.00000	1.40250	0.15000
XPAICHC87308701	CATALYST	0.00000	10.00000	0.00000	1.04700
X-PAI-L-C844BU-1	BURNT UMBER COLORANT	2.34281	1.00000	0.93713	0.40000
X-PAI-L-C844LB-1	LAMP BLACK	0.00000	1.00000	0.00000	0.35000
X-PAI-L-C844MY-	MEDIUM YELLOW COLORANT	0.00000	1.00000	0.00000	0.35000
X-PAI-L-C844QR-1	QUINACRIDONE RED COLORANT	0.00000	1.00000	0.00000	0.35000
X-PAI-L-C844RO-1	RED OXIDE COLORANT	0.00000	1.00000	0.00000	0.35000
X-PAI-L-C844RU-1	RAW UMBER COLORANT	2.49900	1.00000	0.87465	0.35000
X-PAI-L-C844TW-1	TITANIUM WHITE COLORANT	0.00000	1.00000	0.00000	0.35000
X-PAI-L-C844YO-1	YELLOW OXIDE COLORANT	1.08130	1.00000	0.66500	0.61500
X-PAI-LC896BU-1	WATER BASE BURNT UMBER	0.00000	4.00000	0.00000	1.40000
XPAIZ021601	BROWN GLAZE	1.03802	58.00000	3.76884	3.63080
Totals		2.88148	680.00000	369.40978	128.20140

Department Windows

Woodgrain Item Number	Description/Trade Name	lbs HAPs / gal Solids Applied	Quantity Used (gallons)	HAPs Applied (pounds)	Solids Applied (gallons)
X-CHEM-CB	COOL BLUE GLUE BARRIER	0.00000	750.00000	0.00000	712.50000
X-CHEM-EXXSOL	MINERAL SPIRITS-HYDRATED	0.00000	59726.13867	0.77011	0.00000
X-CHEM-WOODLI	WATER REPELENT WOOD PERSERVATIV	0.00000	9950.61644	0.00000	4975.30822
Totals		0.00014	70426.75511	0.77011	5687.80822

Department Wrap

Woodgrain Item Number	Description/Trade Name	lbs HAPs / gal Solids Applied	Quantity Used (gallons)	HAPs Applied (pounds)	Solids Applied (gallons)
2H850	HOT MELT CHICKLETS	0.00007	13630.81395	0.93780	13630.81395

43362	SWIFTHERM 43362	0.00000	3415.36615	0.00000	3415.36615
M768PEL	HOT MELT ADHESIVE	0.00000	193.10345	0.00000	193.10345
PA285	AQUEOUS ADHESIVE	0.00000	317.53032	0.00000	222.27122
PA310	AQUEOUS ADHESIVE	0.00000	9309.52381	0.00000	5585.71429
Totals		0.00004	26866.33768	0.93780	23047.26906
Facility Totals		0.27713	162588.87335	12265.37429	44258.68220

NESHAP QQQQ Twelve Month Rolling Average Report

Beginning Month December - 2006 **Ending Month** November - 2007

Department 6/4

Woodgrain Item Number	Description/Trade Name	lbs HAPs / gal Solids Applied	Quantity Used (gallons)	HAPs Applied (pounds)	Solids Applied (gallons)
10532	WHITE PRIMER/TOPCOAT	0.00000	1194.86957	0.00000	597.43478
X-PAI-10505	OFF WHITE MILLWORK PRIMER	0.00000	7845.19298	0.00000	3844.14456
X-PAI-10-532	WHITE PRIMER/TOPCOAT	0.00000	303.65217	0.00000	151.82609
Totals		0.00000	9343.71472	0.00000	4593.40543

Department Basecoat

Woodgrain Item Number	Description/Trade Name	lbs HAPs / gal Solids Applied	Quantity Used (gallons)	HAPs Applied (pounds)	Solids Applied (gallons)
01031	THINNER BLEND	0.00000	15916.00000	0.00000	0.00000
7219	DEFOAMER/BUBBLE BREAKER	0.00000	175.00000	0.00000	49.00000
ALCOHOLVANZO	ALCOHOL VANZOL	0.00000	15.00000	5.14800	0.00000
CHE-DAP	REPAIR PUTTY	0.00000	1.76000	0.00000	1.76000
E60WL510	ACRYLIC WHITE PRIMER	0.00000	1911.00000	0.00000	859.95000
E60WL563	MILLWORK OFF WHITE PRIMER	0.00000	4483.08943	0.00000	1748.40488
P63YL0002	HAPS COMPLIANT NUTRACOAT	1.51324	7758.00000	2394.89460	1582.63200
P65BL1	BASECOAT BLACK	1.83078	299.00000	118.78672	64.88300
P65RH39	BRIGHT RED	16.01600	55.00000	132.13200	8.25000
P65RL0001	HAPS COMPLIANT RED OXIDE	1.42800	2279.00000	748.51476	524.17000
P65WL0004	HAPS COMPLIANT WHITE	1.74400	13805.00000	6259.73920	3589.30000
P65YL0001	HAPS COMPLIANT YELLOW OXIDE	1.40875	4199.00000	1419.68190	1007.76000
P65YL2	BASECOAT BRITE YELLOW	1.56400	477.00000	193.96728	124.02000
RESIND	RESIND	0.00003	1260.91703	0.01155	378.27511
T67F6	FAST DRY VINYL SEALER	0.00000	111.00000	0.00000	16.65000
X-CHEM-ISOPROP	ISOPROPYL ALCOHOL	0.00000	170.00000	0.00000	0.00000
Totals		1.13238	52915.76646	11272.87601	9955.05499

Department Emboss

Woodgrain Item Number	Description/Trade Name	lbs HAPs / gal Solids Applied	Quantity Used (gallons)	HAPs Applied (pounds)	Solids Applied (gallons)
S61R503	UNIVERSAL STAIN RED	0.00000	6.00000	0.00000	1.44000

S61Y504	UNIVERSAL DYE STAIN CONCENTRATE	0.00000	18.00000	0.00000	3.78000
Totals		0.00000	24.00000	0.00000	5.22000

Department Stain

Woodgrain Item Number	Description/Trade Name	lbs HAPs / gal Solids Applied	Quantity Used (gallons)	HAPs Applied (pounds)	Solids Applied (gallons)
5459070	WHITE PRE-CAT PRIMER	0.88203	6.00000	1.56967	1.77960
X-PAI-8242912	W/B SPRAY STAIN BASE	0.04079	85.00000	0.21497	5.27000
X-PAI-C896YO-1Q	WATER BASE YELLOW OXIDE COL	0.00000	2.00000	0.00000	0.70000
X-PAI-CHC431-430	5 SHEEN TOPCOAT	0.17857	55.00000	3.43750	19.25000
X-PAI-CHC431-431	10 SHEEN TOPCOAT	0.00000	50.00000	0.00000	17.50000
XPAICHC43143215	CHEMSHIELD LOW GLOSS	3.90922	605.00000	477.27240	122.08900
X-PAI-CHC522-141	PLASTIPRIMER WHITE	0.49966	6.00000	1.04928	2.10000
X-PAI-CHC870-120	FLATTENING PASTE	9.35000	1.00000	1.40250	0.15000
XPAICHC87308701	CATALYST	0.00000	10.00000	0.00000	1.04700
X-PAI-CHC873-122	CATALYST	1.71429	4.00000	2.40000	1.40000
X-PAI-L-C844BU-1	BURNT UMBER COLORANT	2.34281	1.00000	0.93713	0.40000
X-PAI-L-C844LB-1	LAMP BLACK	0.00000	1.00000	0.00000	0.35000
X-PAI-L-C844MY-	MEDIUM YELLOW COLORANT	0.00000	1.00000	0.00000	0.35000
X-PAI-L-C844QR-1	QUINACRIDONE RED COLORANT	0.00000	1.00000	0.00000	0.35000
X-PAI-L-C844RO-1	RED OXIDE COLORANT	0.00000	1.00000	0.00000	0.35000
X-PAI-L-C844RU-1	RAW UMBER COLORANT	2.49900	1.00000	0.87465	0.35000
X-PAI-L-C844TW-1	TITANIUM WHITE COLORANT	0.00000	1.00000	0.00000	0.35000
X-PAI-L-C844YO-1	YELLOW OXIDE COLORANT	1.08130	1.00000	0.66500	0.61500
X-PAI-LC896BU-1	WATER BASE BURNT UMBER	0.00000	4.00000	0.00000	1.40000
XPAIZ021601	BROWN GLAZE	1.03802	80.00000	5.19840	5.00800
Totals		2.73782	916.00000	495.02149	180.80860

Department Windows

Woodgrain Item Number	Description/Trade Name	lbs HAPs / gal Solids Applied	Quantity Used (gallons)	HAPs Applied (pounds)	Solids Applied (gallons)
X-CHEM-EXXSOL	MINERAL SPIRITS-HYDRATED	0.00000	59159.36342	0.76280	0.00000
X-CHEM-WOODLI	WATER REPELENT WOOD PERSERVATIV	0.00000	9955.00000	0.00000	4977.50000
Totals		0.00015	69114.36342	0.76280	4977.50000

Department Wrap

Woodgrain Item Number	Description/Trade Name	lbs HAPs / gal Solids Applied	Quantity Used (gallons)	HAPs Applied (pounds)	Solids Applied (gallons)
2H850	HOT MELT CHICKLETS	0.00007	13555.23256	0.93260	13555.23256

43362	SWIFTHERM 43362	0.00000	3348.73950	0.00000	3348.73950
89056	FORBO ADVANTAGE 89056	0.00000	137.07572	0.00000	137.07572
M768PEL	HOT MELT ADHESIVE	0.00000	193.10345	0.00000	193.10345
PA285	AQUEOUS ADHESIVE	0.00000	264.60860	0.00000	185.22602
PA310	AQUEOUS ADHESIVE	0.00000	9309.52381	0.00000	5585.71429
Totals		0.00004	26808.28363	0.93260	23005.09153
Facility Totals		0.27552	159122.12824	11769.59290	42717.08054

NESHAP QQQQ Twelve Month Rolling Average Report

Beginning Month January - 2007 **Ending Month** December - 2007

Department 6/4

Woodgrain Item Number	Description/Trade Name	lbs HAPs / gal Solids Applied	Quantity Used (gallons)	HAPs Applied (pounds)	Solids Applied (gallons)
10532	WHITE PRIMER/TOPCOAT	0.00000	607.39130	0.00000	303.69565
X-PAI-10505	OFF WHITE MILLWORK PRIMER	0.00000	6737.40351	0.00000	3301.32772
X-PAI-10-532	WHITE PRIMER/TOPCOAT	0.00000	303.65217	0.00000	151.82609
Totals		0.00000	7648.44699	0.00000	3756.84946

Department Basecoat

Woodgrain Item Number	Description/Trade Name	lbs HAPs / gal Solids Applied	Quantity Used (gallons)	HAPs Applied (pounds)	Solids Applied (gallons)
01031	THINNER BLEND	0.00000	15846.00000	0.00000	0.00000
7219	DEFOAMER/BUBBLE BREAKER	0.00000	165.00000	0.00000	46.20000
ALCOHOLVANZO	ALCOHOL VANZOL	0.00000	15.00000	5.14800	0.00000
CHE-DAP	REPAIR PUTTY	0.00000	1.28000	0.00000	1.28000
E60WL510	ACRYLIC WHITE PRIMER	0.00000	1911.00000	0.00000	859.95000
E60WL563	MILLWORK OFF WHITE PRIMER	0.00000	4483.08943	0.00000	1748.40488
P63YL0002	HAPS COMPLIANT NUTRACOAT	1.51324	7358.00000	2271.41460	1501.03200
P65BL1	BASECOAT BLACK	1.83078	405.00000	160.89840	87.88500
P65RH39	BRIGHT RED	16.01600	105.00000	252.25200	15.75000
P65RL0001	HAPS COMPLIANT RED OXIDE	1.42800	2173.00000	713.70012	499.79000
P65WL0004	HAPS COMPLIANT WHITE	1.74400	14911.00000	6761.24384	3876.86000
P65YL0001	HAPS COMPLIANT YELLOW OXIDE	1.40875	4055.00000	1370.99550	973.20000
P65YL2	BASECOAT BRITE YELLOW	1.56400	477.00000	193.96728	124.02000
RESIND	RESIND	0.00003	1260.91703	0.01155	378.27511
T67F6	FAST DRY VINYL SEALER	0.00000	111.00000	0.00000	16.65000
X-CHEM-ISOPROP	ISOPROPYL ALCOHOL	0.00000	170.00000	0.00000	0.00000
Totals		1.15799	53447.28646	11729.63129	10129.29699

Department Emboss

Woodgrain Item Number	Description/Trade Name	lbs HAPs / gal Solids Applied	Quantity Used (gallons)	HAPs Applied (pounds)	Solids Applied (gallons)
S61B500	STAIN CONCENTRATE, BLK	0.00000	1.00000	0.00000	0.17000

S61R503	UNIVERSAL STAIN RED	0.00000	5.00000	0.00000	1.20000
S61Y504	UNIVERSAL DYE STAIN CONCENTRATE	0.00000	12.00000	0.00000	2.52000
Totals		0.00000	18.00000	0.00000	3.89000

Department Stain

Woodgrain Item Number	Description/Trade Name	lbs HAPs / gal Solids Applied	Quantity Used (gallons)	HAPs Applied (pounds)	Solids Applied (gallons)
5459070	WHITE PRE-CAT PRIMER	0.88203	6.00000	1.56967	1.77960
X-PAI-8242912	W/B SPRAY STAIN BASE	0.04079	85.00000	0.21497	5.27000
X-PAI-C896YO-1Q	WATER BASE YELLOW OXIDE COL	0.00000	2.00000	0.00000	0.70000
X-PAI-CHC431-430	5 SHEEN TOPCOAT	0.17857	55.00000	3.43750	19.25000
X-PAI-CHC431-431	10 SHEEN TOPCOAT	0.00000	50.00000	0.00000	17.50000
XPAICHC43143215	CHEMSHIELD LOW GLOSS	3.90922	605.00000	477.27240	122.08900
X-PAI-CHC522-141	PLASTIPRIMER WHITE	0.49966	6.00000	1.04928	2.10000
X-PAI-CHC870-120	FLATTENING PASTE	9.35000	1.00000	1.40250	0.15000
XPAICHC87308701	CATALYST	0.00000	10.00000	0.00000	1.04700
X-PAI-CHC873-122	CATALYST	1.71429	4.00000	2.40000	1.40000
X-PAI-L-C844BU-1	BURNT UMBER COLORANT	2.34281	1.00000	0.93713	0.40000
X-PAI-L-C844LB-1	LAMP BLACK	0.00000	1.00000	0.00000	0.35000
X-PAI-L-C844MY-	MEDIUM YELLOW COLORANT	0.00000	1.00000	0.00000	0.35000
X-PAI-L-C844QR-1	QUINACRIDONE RED COLORANT	0.00000	1.00000	0.00000	0.35000
X-PAI-L-C844RO-1	RED OXIDE COLORANT	0.00000	1.00000	0.00000	0.35000
X-PAI-L-C844RU-1	RAW UMBER COLORANT	2.49900	1.00000	0.87465	0.35000
X-PAI-L-C844TW-1	TITANIUM WHITE COLORANT	0.00000	1.00000	0.00000	0.35000
X-PAI-L-C844YO-1	YELLOW OXIDE COLORANT	1.08130	1.00000	0.66500	0.61500
X-PAI-LC896BU-1	WATER BASE BURNT UMBER	0.00000	4.00000	0.00000	1.40000
XPAIZ021601	BROWN GLAZE	1.03802	80.00000	5.19840	5.00800
Totals		2.73782	916.00000	495.02149	180.80860

Department Windows

Woodgrain Item Number	Description/Trade Name	lbs HAPs / gal Solids Applied	Quantity Used (gallons)	HAPs Applied (pounds)	Solids Applied (gallons)
X-CHEM-EXXSOL	MINERAL SPIRITS-HYDRATED	0.00000	58945.77571	0.76005	0.00000
X-CHEM-WOODLI	WATER REPELENT WOOD PERSERVATIV	0.00000	9963.49315	0.00000	4981.74658
Totals		0.00015	68909.26886	0.76005	4981.74658

Department Wrap

Woodgrain Item Number	Description/Trade Name	lbs HAPs / gal Solids Applied	Quantity Used (gallons)	HAPs Applied (pounds)	Solids Applied (gallons)

2H850	HOT MELT CHICKLETS	0.00007	13247.09302	0.91140	13247.09302
43362	SWIFTHERM 43362	0.00000	3360.74430	0.00000	3360.74430
89056	FORBO ADVANTAGE 89056	0.00000	137.07572	0.00000	137.07572
PA285	AQUEOUS ADHESIVE	0.00000	317.53032	0.00000	222.27122
PA310	AQUEOUS ADHESIVE	0.00000	9035.71429	0.00000	5421.42857
Totals		0.00004	26098.15764	0.91140	22388.61283
Facility Totals		0.29503	157037.15995	12226.32422	41441.20446

DEQ AIR QUALITY PROGRAM
1410 N. Hilton, Boise, ID 83706
For assistance, call the
Air Permit Hotline – 1-877-5PERMIT

AIR PERMIT APPLICATION

Revision 6
10/7/09

For each box in the table below, CTRL+click on the blue underlined text for instructions and information.

IDENTIFICATION	
1. Company Name: Woodgrain Millwork Inc.	2. Facility Name: Fruitland Facility
3. Brief Project Description: Tier I (Title V) Permit Renewal Application - Permit T1-060054 Facility #075-00001	

APPLICABILITY DETERMINATION	
4. List applicable subparts of the New Source Performance Standards (NSPS) (40 CFR part 60). Examples of NSPS affected emissions units include internal combustion engines, boilers, turbines, etc. The applicant must thoroughly review the list of affected emissions units.	List of applicable subpart(s): None ☐ Not Applicable
5. List applicable subpart(s) of the National Emission Standards for Hazardous Air Pollutants (NESHAP) found in 40 CFR part 61 and 40 CFR part 63. Examples of affected emission units include solvent cleaning operations, industrial cooling towers, paint stripping and miscellaneous surface coating. EPA has a web page dedicated to NESHAP that should be useful to applicants.	List of applicable subpart(s): 40 CFR 63 Subpart KK DEQ has already Completed regulatory Review for these Subparts in the previous Tier I and Tier II Permits. Listed below highlighted are the sections applicable to Woodgrain. See Example of Semi-annual reporting which Woodgrain has been compliant with. ☐ Not Applicable
6. For each subpart identified above, conduct a complete a regulatory analysis using the instructions and referencing the example provided on the following pages. **Note** - Regulatory reviews must be submitted with sufficient detail so that DEQ can verify applicability and document in legal terms why the regulation applies. Regulatory reviews that are submitted with insufficient detail will be determined incomplete.	☐ A detailed regulatory review is provided (Follow instructions and example). ☐ DEQ has already been provided a detailed regulatory review. Give a reference to the document including the date.

IF YOU ARE UNSURE HOW TO ANSWER ANY OF THESE QUESTIONS, CALL THE AIR PERMIT HOTLINE AT 1-877-5PERMIT

It is emphasized that it is the applicant's responsibility to satisfy all technical and regulatory requirements, and that DEQ will help the applicant understand what those requirements are prior to the application being submitted but that DEQ will not perform the required technical or regulatory analysis on the applicant's behalf.

Subpart KK—National Emission Standards for the Printing and Publishing Industry

Source: 61 FR 27140, May 30, 1996, unless otherwise noted.

§ 63.820 Applicability.

(a) The provisions of this subpart apply to:

(1) Each new and existing facility that is a major source of hazardous air pollutants (HAP), as defined in 40 CFR 63.2, at which publication rotogravure, product and packaging rotogravure, or wide-web flexographic printing presses are operated, and

Woodgrain is Subject to this NESHAP because it was a major source of HAPs at the time that this subpart was promulgated. Woodgrain prints simulated wood patterns onto subsrates.

(2) Each new and existing facility at which publication rotogravure, product and packaging rotogravure, or wide-web flexographic printing presses are operated for which the owner or operator chooses to commit to and meets the criteria of paragraphs (a)(2)(i) and (ii) of this section for purposes of establishing the facility to be an area source of HAP with respect to this subpart. A facility which establishes area source status through some other mechanism, as described in paragraph (a)(7) of this section, is not subject to the provisions of this subpart.

(i) Use less than 9.1 Mg (10 tons) per each rolling 12-month period of each HAP at the facility, including materials used for source categories or purposes other than printing and publishing, and

(ii) Use less than 22.7 Mg (25 tons) per each rolling 12-month period of any combination of HAP at the facility, including materials used for source categories or purposes other than printing and publishing.

(3) Each facility for which the owner or operator chooses to commit to and meets the criteria stated in paragraph (a)(2) of this section shall be considered an area source, and is subject only to the provisions of §§63.829(d) and 63.830(b)(1) of this subpart.

(4) Each facility for which the owner or operator commits to the conditions in paragraph (a)(2) of this section may exclude material used in routine janitorial or facility grounds maintenance, personal uses by employees or other persons, the use of products for the purpose of maintaining electric, propane, gasoline and diesel powered motor vehicles operated by the facility, and the use of HAP contained in intake water (used for processing or noncontact cooling) or intake air (used either as compressed air or for combustion).

(5) Each facility for which the owner or operator commits to the conditions in paragraph (a)(2) of this section to become an area source, but subsequently exceeds either of the thresholds in paragraph (a)(2) of this section for any rolling 12-month period (without

first obtaining and complying with other limits that keep its potential to emit HAP below major source levels), shall be considered in violation of its commitment for that 12-month period and shall be considered a major source of HAP beginning the first month after the end of the 12-month period in which either of the HAP-use thresholds was exceeded. As a major source of HAP, each such facility would be subject to the provisions of this subpart as noted in paragraph (a)(1) of this section and would no longer be eligible to use the provisions of paragraph (a)(2) of this section, even if in subsequent 12-month periods the facility uses less HAP than the thresholds in paragraph (a)(2) of this section.

(6) An owner or operator of an affected source subject to paragraph (a)(2) of this section who chooses to no longer be subject to paragraph (a)(2) of this section shall notify the Administrator of such change. If, by no longer being subject to paragraph (a)(2) of this section, the facility at which the affected source is located becomes a major source:

(i) The owner or operator of an existing source must continue to comply with the HAP usage provisions of paragraph (a)(2) of this section until the source is in compliance with all relevant requirements for existing affected sources under this subpart;

(ii) The owner or operator of a new source must continue to comply with the HAP usage provisions of paragraph (a)(2) of this section until the source is in compliance with all relevant requirements for new affected sources under this subpart.

(7) Nothing in this paragraph is intended to preclude a facility from establishing area source status by limiting its potential to emit through other appropriate mechanisms that may be available through the permitting authority.

(b) This subpart does not apply to research or laboratory equipment.

(c) In response to an action to enforce the standards set forth in this subpart, an owner or operator may assert an affirmative defense to a claim for civil penalties for exceedances of such standards that are caused by a malfunction, as defined in §63.2. Appropriate penalties may be assessed, however, if the owner or operator fails to meet the burden of proving all the requirements in the affirmative defense. The affirmative defense shall not be available for claims for injunctive relief.

(1) To establish the affirmative defense in any action to enforce such a limit, the owners or operators of a facility must timely meet the notification requirements of paragraph (c)(2) of this section, and must prove by a preponderance of evidence that:

(i) The excess emissions were caused by a sudden, infrequent, and unavoidable failure of air pollution control and monitoring equipment, or a process to operate in a normal or usual manner; and could not have been prevented through careful planning, proper design or better operation and maintenance practices; and did not stem from any activity or event that could have been foreseen and avoided, or planned for; and were not part of a recurring pattern indicative of inadequate design, operation, or maintenance;

(ii) Repairs were made as expeditiously as possible when the applicable emission limitations were being exceeded. Off-shift and overtime labor were used, to the extent practicable to make these repairs;

(iii) The frequency, amount, and duration of the excess emissions (including any bypass) were minimized to the maximum extent practicable during periods of such emissions;

(iv) If the excess emissions resulted from a bypass of control equipment or a process, then the bypass was unavoidable to prevent loss of life, personal injury, or severe property damage;

(v) All possible steps were taken to minimize the impact of the excess emissions on ambient air quality, the environment, and human health;

(vi) All emissions monitoring and control systems were kept in operation, if at all possible, consistent with safety and good air pollution control practices;

(vii) All of the actions in response to the excess emissions were documented by properly signed, contemporaneous operating logs;

(viii) At all times, the facility was operated in a manner consistent with good practices for minimizing emissions; and

(ix) The owner or operator has prepared a written root cause analysis, the purpose of which is to determine, correct and eliminate the primary causes of the malfunction and the excess emissions resulting from the malfunction event at issue. The analysis shall also specify, using the best monitoring methods and engineering judgment, the amount of excess emissions that were the result of the malfunction.

(2) *Notification.* The owner or operator of the facility experiencing an exceedance of its emission limit(s) during a malfunction shall notify the Administrator by telephone or facsimile (FAX) transmission as soon as possible, but no later than 2 business days after the initial occurrence of the malfunction, if it wishes to avail itself of an affirmative defense to civil penalties for that malfunction. The owner or operator seeking to assert an affirmative defense shall also submit a written report to the Administrator within 45 days of the initial occurrence of the exceedance of the standard in this subpart to demonstrate, with all necessary supporting documentation, that it has met the requirements set forth in paragraph (c)(1) of this section. The owner or operator may seek an extension of this deadline for up to 30 additional days by submitting a written request to the Administrator before the expiration of the 45 day period. Until a request for an extension has been approved by the Administrator, the owner or operator is subject to the requirement to submit such report within 45 days of the initial occurrence of the exceedance.

[61 FR 27140, May 30, 1996, as amended at 71 FR 29799, May 24, 2006; 76 FR 22597, Apr. 21, 2011]

§ 63.821 Designation of affected sources.

(a) The affected sources subject to this subpart are:

(1) All of the publication rotogravure presses and all related equipment, including proof presses, cylinder and parts cleaners, ink and solvent mixing and storage equipment, and solvent recovery equipment at a facility.

(2) All of the product and packaging rotogravure or wide-web flexographic printing presses at a facility plus any other equipment at that facility which the owner or operator chooses to include in accordance with paragraphs (a)(3) or (a)(4) of this section, except

(i) Proof presses, unless the owner or operator chooses to include proof presses in the affected source in accordance with paragraph (a)(5) of this section.

(ii) Any product and packaging rotogravure or wide-web flexographic press which is used primarily for coating, laminating, or other operations which the owner or operator chooses to exclude, provided that

(A) the sum of the total mass of inks, coatings, varnishes, adhesives, primers, solvents, thinners, reducers, and other materials applied by the press using product and packaging rotogravure print stations and the total mass of inks, coatings, varnishes, adhesives, primers, solvents, thinners, reducers, and other materials applied by the press using wide-web flexographic print stations in each month never exceeds 5 percent of the total mass of inks, coatings, varnishes, adhesives, primers, solvents, thinners, reducers, and other materials applied by the press in that month, including all inboard and outboard stations; and

(B) The owner or operator maintains records as required in §63.829(f).

(3) The owner or operator of an affected source, as defined in paragraph (a)(2) of this section, may elect to include in that affected source stand-alone equipment subject to the following provisions:

(i) Stand-alone equipment meeting any of the criteria specified in this subparagraph is eligible for inclusion:

(A) The stand-alone equipment and one or more product and packaging rotogravure or wide-web flexographic presses are used to apply solids-containing materials to the same web or substrate; or

(B) The stand-alone equipment and one or more product and packaging rotogravure or wide-web flexographic presses apply a common solids-containing material; or

(C) A common control device is used to control organic HAP emissions from the stand-alone equipment and from one or more product and packaging rotogravure or wide-web flexographic printing presses;

(ii) All eligible stand-alone equipment located at the facility is included in the affected source; and

(iii) No product and packaging rotogravure or wide-web flexographic presses are excluded from the affected source under the provisions of paragraph (a)(2)(ii) of this section.

(4) The owner or operator of an affected source, as defined in paragraph (a)(2) of this section, may elect to include in that affected source narrow-web flexographic presses subject to the following provisions:

(i) Each narrow-web flexographic press meeting any of the criteria specified in this subparagraph is eligible for inclusion:

(A) The narrow-web flexographic press and one or more product and packaging rotogravure or wide-web flexographic presses are used to apply solids containing material to the same web or substrate; or

(B) The narrow-web flexographic press and one or more product and packaging rotogravure or wide-web flexographic presses apply a common solids-containing material; or

(C) A common control device is used to control organic HAP emissions from the narrow-web flexographic press and from one or more product and packaging rotogravure or wide-web flexographic presses; and

(ii) All eligible narrow-web flexographic presses located at the facility are included in the affected source.

(5) The owner or operator of an affected source, as defined in paragraph (a)(2) of this section, may elect to include in that affected source rotogravure proof presses or flexographic proof presses subject to the following provisions:

(i) Each proof press meeting any of the criteria specified in this subparagraph is eligible for inclusion.

(A) The proof press and one or more product and packaging rotogravure or wide-web flexographic presses apply a common solids-containing material; or

(B) A common control device is used to control organic HAP emissions from the proof press and from one or more product and packaging rotogravure or wide-web flexographic presses; and

(ii) All eligible proof presses located at the facility are included in the affected source.

(6) Affiliated operations such as mixing or dissolving of ink or coating ingredients prior to application; ink or coating mixing for viscosity adjustment, color tint or additive blending, or pH adjustment; cleaning of ink or coating lines and line parts; handling and storage of inks, coatings, and solvents; and conveyance and treatment of wastewater are part of the printing and publishing industry source category, but are not part of the product and packaging rotogravure or wide-web flexographic printing affected source.

(7) Other presses are part of the printing and publishing industry source category, but are not part of the publication rotogravure affected source or the product and packaging rotogravure or wide-web flexographic printing affected source and are, therefore, exempt from the requirements of this subpart except as provided in paragraph (a)(3) of this section.

(8) Narrow web-flexographic presses are part of the printing and publishing industry source category, but are not part of the publication rotogravure affected source or the product and packaging rotogravure or wide-web flexographic printing affected source and are, therefore, exempt from the requirements of this subpart except as provided in paragraphs (a)(3) through (5) of this section.

(b) Each product and packaging rotogravure or wide-web flexographic printing affected source at a facility that is a major source of HAP, as defined in 40 CFR 63.2, that complies with the criteria of paragraphs (b)(1) or (b)(2) on and after the applicable compliance date as specified in §63.826 of this subpart is subject only to the requirements of §§63.829(e) and 63.830(b)(1) of this subpart.

(1) The owner or operator of the affected source applies no more than 500 kilograms (kg) per month, for every month, of inks, coatings, varnishes, adhesives, primers, solvents, thinners, reducers, and other materials on product and packaging rotogravure or wide-web flexographic printing presses, or

(2) The owner or operator of the affected source applies no more than 400 kg per month, for every month, of organic HAP on product and packaging rotogravure or wide-web flexographic printing presses.

(c) Each product and packaging rotogravure or wide-web flexographic printing affected source at a facility that is a major source of HAP, as defined in 40 CFR 63.2, that complies with neither the criterion of paragraph (b)(1) nor (b)(2) of this section in any month after the applicable compliance date as specified in §63.826 of this subpart is, starting with that month, subject to all relevant requirements of this subpart and is no

longer eligible to use the provisions of paragraph (b) of this section, even if in subsequent months the affected source does comply with the criteria of paragraphs (b)(1) or (b)(2) of this section.

[61 FR 27140, May 30, 1996, as amended at 71 FR 29799, May 24, 2006]

§ 63.822 Definitions.

(a) All terms used in this subpart that are not defined below have the meaning given to them in the CAA and in subpart A of this part.

Affirmative defense means, in the context of an enforcement proceeding, a response or a defense put forward by a defendant, regarding which the defendant has the burden of proof, and the merits of which are independently and objectively evaluated in a judicial or administrative proceeding.

Always-controlled work station means a work station associated with a dryer from which the exhaust is delivered to a control device, with no provision for the dryer exhaust to bypass the control device. Sampling lines for analyzers and relief valves needed for safety purposes are not considered bypass lines.

Capture efficiency means the fraction of all organic HAP emissions generated by a process that are delivered to a control device, expressed as a percentage.

Capture system means a hood, enclosed room, or other means of collecting organic HAP emissions into a closed-vent system that exhausts to a control device.

Car-seal means a seal that is placed on a device that is used to change the position of a valve or damper (e.g., from open to closed) in such a way that the position of the valve or damper cannot be changed without breaking the seal.

Certified product data sheet (CPDS) means documentation furnished by suppliers of inks, coatings, varnishes, adhesives, primers, solvents, and other materials or by an independent third party that provides the organic HAP weight fraction of these materials determined in accordance with §63.827(b), or the volatile matter weight fraction or solids weight fraction determined in accordance with §63.827(c). A material safety data sheet (MSDS) may serve as a CPDS provided the MSDS meets the data requirements of §63.827(b) and (c). The purpose of the CPDS is to assist the owner or operator in demonstrating compliance with the emission limitations presented in §§63.824–63.825.

Coating means material applied onto or impregnated into a substrate for decorative, protective, or functional purposes. Such materials include, but are not limited to, solvent-borne coatings, waterborne coatings, wax coatings, wax laminations, extrusion coatings, extrusion laminations, 100 percent solid adhesives, ultra-violet cured coatings, electron beam cured coatings, hot melt coatings, and cold seal coatings. Materials used to form

unsupported substrates such as calendaring of vinyl, blown film, cast film, extruded film, and coextruded film are not considered coatings.

Control device means a device such as a carbon adsorber or oxidizer which reduces the organic HAP in an exhaust gas by recovery or by destruction.

Control device efficiency means the ratio of organic HAP emissions recovered or destroyed by a control device to the total organic HAP emissions that are introduced into the control device, expressed as a percentage.

Day means a 24-consecutive-hour period.

Facility means all contiguous or adjoining property that is under common ownership or control, including properties that are separated only by a road or other public right-of-way.

Flexible packaging means any package or part of a package the shape of which can be readily changed. Flexible packaging includes, but is not limited to, bags, pouches, labels, liners and wraps utilizing paper, plastic, film, aluminum foil, metalized or coated paper or film, or any combination of these materials.

Flexographic press means an unwind or feed section, which may include more than one unwind or feed station (such as on a laminator), a series of individual work stations, one or more of which is a flexographic print station, any dryers (including interstage dryers and overhead tunnel dryers) associated with the work stations, and a rewind, stack, or collection section. The work stations may be oriented vertically, horizontally, or around the circumference of a single large impression cylinder. Inboard and outboard work stations, including those employing any other technology, such as rotogravure, are included if they are capable of printing or coating on the same substrate. A publication rotogravure press with one or more flexographic imprinters is not a flexographic press.

Flexographic print station means a print station on which a flexographic printing operation is conducted. A flexographic print station includes an anilox roller that transfers material to a raised image (type or art) on a plate cylinder. The material is then transferred from the image on the plate cylinder to the web or sheet to be printed. A flexographic print station may include a fountain roller to transfer material from the reservoir to the anilox roller, or material may be transferred directly from the reservoir to the anilox roller. The materials applied are of a fluid, rather than paste, consistency.

HAP applied means the organic HAP content of all inks, coatings, varnishes, adhesives, primers, solvent, and other materials applied to a substrate by a product and packaging rotogravure or wide-web flexographic printing affected source.

HAP used means the organic HAP applied by a publication rotogravure printing affected source, including all organic HAP used for cleaning, parts washing, proof presses, and all organic HAP emitted during tank loading, ink mixing, and storage.

Intermittently-controllable work station means a work station associated with a dryer with provisions for the dryer exhaust to be delivered to or diverted from a control device depending on the position of a valve or damper. Sampling lines for analyzers and relief valves needed for safety purposes are not considered bypass lines.

Month means a calendar month or a prespecified period of 28 days to 35 days.

Narrow-web flexographic press means a flexographic press that is not capable of printing substrates greater than 18 inches in width and that does not also meet the definition of rotogravure press (i.e., it has no rotogravure print stations).

Never-controlled work station means a work station which is not equipped with provisions by which any emissions, including those in the exhaust from any associated dryer, may be delivered to a control device.

Other press means a lithographic press, letterpress press, or screen printing press that does not meet the definition of rotogravure press or flexographic press (i.e., it has no rotogravure print stations and no flexographic print stations), and that does not print on fabric or other textiles as defined in the Printing, Coating, and Dyeing of Fabrics and Other Textiles NESHAP (40 CFR part 63, subpart OOOO), wood furniture components as defined in the Wood Furniture Manufacturing Operations NESHAP (40 CFR part 63, subpart JJ) or wood building products as defined in the Surface Coating of Wood Building Products NESHAP (40 CFR part 63, subpart QQQQ).

Overall Organic HAP control efficiency means the total efficiency of a control system, determined either by:

(1) The product of the capture efficiency and the control device efficiency or

(2) A liquid-liquid material balance.

Print station means a work station on which a printing operation is conducted.

Printing operation means the formation of words, designs, or pictures on a substrate other than wood furniture components as defined in the Wood Furniture Manufacturing Operations NESHAP (40 CFR part 63, subpart JJ), wood building products as defined in the Surface Coating of Wood Building Products NESHAP (40 CFR part 63, subpart QQQQ), and fabric or other textiles as defined in the Printing, Coating, and Dyeing of Fabric and Other Textiles NESHAP (40 CFR part 63, subpart OOOO), except for fabric or other textiles for use in flexible packaging.

Product and packaging rotogravure printing means the production, on a rotogravure press, of any printed substrate not otherwise defined as publication rotogravure printing. This includes, but is not limited to, folding cartons, flexible packaging, labels and wrappers, gift wraps, wall and floor coverings, upholstery, decorative laminates, and tissue products.

Proof press means any press which prints only non-saleable items used to check the quality of image formation of rotogravure cylinders or flexographic plates; substrates such as paper, plastic film, metal foil, or vinyl; or ink, coating varnish, adhesive, primer, or other solids-containing material.

Publication rotogravure press means a rotogravure press used for publication rotogravure printing. A publication rotogravure press may include one or more flexographic imprinters. A publication rotogravure press with one or more flexographic imprinters is not a flexographic press.

Publication rotogravure printing means the production, on a rotogravure press, of the following saleable paper products:

(1) Catalogues, including mail order and premium,

(2) Direct mail advertisements, including circulars, letters, pamphlets, cards, and printed envelopes,

(3) Display advertisements, including general posters, outdoor advertisements, car cards, window posters; counter and floor displays; point of purchase and other printed display material,

(4) Magazines,

(5) Miscellaneous advertisements, including brochures, pamphlets, catalog sheets, circular folders, announcements, package inserts, book jackets, market circulars, magazine inserts, and shopping news,

(6) Newspapers, magazine and comic supplements for newspapers, and preprinted newspaper inserts, including hi-fi and spectacolor rolls and sections,

(7) Periodicals, and

(8) Telephone and other directories, including business reference services.

Research or laboratory equipment means any equipment for which the primary purpose is to conduct research and development into new processes and products, where such equipment is operated under the close supervision of technically trained personnel and is

not engaged in the manufacture of products for commercial sale in commerce, except in a de minimis manner.

Rotogravure press means an unwind or feed section, which may include more than one unwind or feed station (such as on a laminator), a series of individual work stations, one or more of which is a rotogravure print station, any dryers associated with the work stations, and a rewind, stack, or collection section. Inboard and outboard work stations, including those employing any other technology, such as flexography, are included if they are capable of printing or coating on the same substrate.

Rotogravure print station means a print station on which a rotogravure printing operation is conducted. A rotogravure print station includes a rotogravure cylinder and supply for ink or other solids containing material. The image (type and art) to be printed is etched or engraved below the surface of the rotogravure cylinder. On a rotogravure cylinder the printing image consists of millions of minute cells.

Stand-alone equipment means an unwind or feed section, which may include more than one unwind or feed station (such as on a laminator); a series of one or more work stations and any associated dryers; and a rewind, stack, or collection section that is not part of a product and packaging rotogravure or wide-web flexographic press. Stand-alone equipment is sometimes referred to as "off-line" equipment.

Wide-web flexographic press means a flexographic press capable of printing substrates greater than 18 inches in width.

Work station means a unit on which material is deposited onto a substrate.

(b) The symbols used in equations in this subpart are defined as follows:

(1) C_{ahi}=the monthly average, as-applied, organic HAP content of solids-containing material, i, expressed as a weight-fraction, kg/kg.

(2) C_{asi}=the monthly average, as applied, solids content, of solids-containing material, i, expressed as a weight-fraction, kg/kg.

(3) C_{hi}=the organic HAP content of ink or other solids-containing material, i, expressed as a weight-fraction, kg/kg.

(4) C_{hij}=the organic HAP content of solvent j, added to solids-containing material i, expressed as a weight-fraction, kg/kg.

(5) C_{hj}=the organic HAP content of solvent j, expressed as a weight-fraction, kg/kg.

(6) [Reserved]

(7) C_{si}=the solids content of ink or other material, i, expressed as a weight-fraction, kg/kg.

(8) C_{vi}=the volatile matter content of ink or other material, i, expressed as a weight-fraction, kg/kg.

(9) E=the organic volatile matter control efficiency of the control device, percent.

(10) F=the organic volatile matter capture efficiency of the capture system, percent.

(11) G_i=the mass fraction of each solids containing material, i, which was applied at 20 weight-percent or greater solids content, on an as-applied basis, kg/kg.

(12) H = the monthly organic HAP emitted, kg.

(13) H_a=the monthly allowable organic HAP emissions, kg.

(14) H_L=the monthly average, as-applied, organic HAP content of all solids-containing materials applied at less than 0.04 kg organic HAP per kg of material applied, kg/kg.

(15) H_s=the monthly average, as-applied, organic HAP to solids ratio, kg organic HAP/kg solids applied.

(16) H_{si}=the as-applied, organic HAP to solids ratio of material i.

(17) L=the mass organic HAP emission rate per mass of solids applied, kg/kg.

(18) M_{Bi}=the sum of the mass of solids-containing material, i, applied on intermittently-controllable work stations operating in bypass mode and the mass of solids-containing material, i, applied on never-controlled work stations, in a month, kg.

(19) M_{Bj}=the sum of the mass of solvent, thinner, reducer, diluent, or other non-solids-containing material, j, applied on intermittently-controllable work stations operating in bypass mode and the mass of solvent, thinner, reducer, diluent, or other non-solids-containing material, j, applied on never-controlled work stations, in a month, kg.

(20) M_{ci}=the sum of the mass of solids-containing material, i, applied on intermittently-controllable work stations operating in controlled mode and the mass of solids-containing material, i, applied on always-controlled work stations, in a month, kg.

(21) M_{cj}=the sum of the mass of solvent, thinner, reducer, diluent, or other non-solids-containing material, j, applied on intermittently-controllable work stations operating in controlled mode and the mass of solvent, thinner, reducer, diluent, or other non-solids-containing material, j, applied on always-controlled work stations in a month, kg.

(22) [Reserved]

(23) M_{fi}=the organic volatile matter mass flow rate at the inlet to the control device, kg/h.

(24) M_{fo}=the organic volatile matter mass flow rate at the outlet of the control device, kg/h.

(25) M_{hu}=the mass of organic HAP used in a month, kg.

(26) M_i=the mass of ink or other material, i, applied in a month, kg.

(27) M_{ij}=the mass of solvent, thinner, reducer, diluent, or other non-solids-containing material, j, added to solids-containing material, i, in a month, kg.

(28) M_j=the mass of solvent, thinner, reducer, diluent, or other non-solids-containing material, j, applied in a month, kg.

(29) $M_{L,j}$=the mass of solvent, thinner, reducer, diluent, or other non-solids-containing material, j, added to solids-containing materials which were applied at less than 20 weight-percent solids content, on an as-applied basis, in a month, kg.

(30) M_{vr}=the mass of volatile matter recovered in a month, kg.

(31) M_{vu}=the mass of volatile matter, including water, used in a month, kg.

(32) [Reserved]

(33) n=the number of organic compounds in the vent gas.

(34) p=the number of different inks, coatings, varnishes, adhesives, primers, and other materials applied in a month.

(35) q=the number of different solvents, thinners, reducers, diluents, or other non-solids-containing materials applied in a month.

(36) [Reserved]

(37) R=the overall organic HAP control efficiency, percent.

(38) R_e=the overall effective organic HAP control efficiency for publication rotogravure, percent.

(39) R_v=the organic volatile matter collection and recovery efficiency, percent.

(40) S=the mass organic HAP emission rate per mass of material applied, kg/kg.

(41) 0.0416=conversion factor for molar volume, kg-mol/m^3 (@ 293 K and 760 mmHg).

[61 FR 27140, May 30, 1996, as amended at 71 FR 29800, May 24, 2006; 76 FR 22598, Apr. 21, 2011]

§ 63.823 Standards: General.

(a) Table 1 to this subpart provides cross references to the 40 CFR part 63, subpart A, general provisions, indicating the applicability of the general provisions requirements to this subpart KK.

(b) Each owner or operator of an affected source subject to this subpart must at all times operate and maintain that affected source, including associated air pollution control equipment and monitoring equipment, in a manner consistent with safety and good air pollution control practices for minimizing emissions. Determination of whether such operation and maintenance procedures are being used will be based on information available to the Administrator, which may include, but is not limited to, monitoring results, review of operation and maintenance procedures, review of operation and maintenance records, and inspection of the source.

[76 FR 22598, Apr. 21, 2011]

§ 63.824 Standards: Publication rotogravure printing.

(a) Each owner or operator of any publication rotogravure printing affected source that is subject to the requirements of this subpart shall comply with these requirements on and after the compliance dates as specified in §63.826 of this subpart.

(b) Each publication rotogravure affected source shall limit emissions of organic HAP to no more than eight percent of the total volatile matter used each month. The emission limitation may be achieved by overall control of at least 92 percent of organic HAP used, by substitution of non-HAP materials for organic HAP, or by a combination of capture and control technologies and substitution of materials. To demonstrate compliance, each owner or operator shall follow the procedure in paragraph (b)(1) of this section when emissions from the affected source are controlled by a solvent recovery device, the procedure in paragraph (b)(2) of this section when emissions from the affected source are controlled by an oxidizer, and the procedure in paragraph (b)(3) of this section when no control device is used.

(1) Each owner or operator using a solvent recovery device to control emissions shall demonstrate compliance by showing that the HAP emission limitation is achieved by following the procedures in either paragraph (b)(1)(i) or (b)(1)(ii) of this section:

(i) Perform a liquid-liquid material balance for each month as follows:

(A) Measure the mass of each ink, coating, varnish, adhesive, primer, solvent, and other material used by the affected source during the month.

(B) Determine the organic HAP content of each ink, coating, varnish, adhesive, primer, solvent and other material used by the affected source during the month following the procedure in §63.827(b)(1).

(C) Determine the volatile matter content, including water, of each ink, coating, varnish, adhesive, primer, solvent, and other material used by the affected source during the month following the procedure in §63.827(c)(1).

(D) Install, calibrate, maintain and operate, according to the manufacturer's specifications, a device that indicates the cumulative amount of volatile matter recovered by the solvent recovery device on a monthly basis. The device shall be initially certified by the manufacturer to be accurate to within ±2.0 percent.

(E) Measure the amount of volatile matter recovered for the month.

(F) Calculate the overall effective organic HAP control efficiency (R_e) for the month using Equation 1:

$$R_e = (100)\frac{M_{vu} - M_{hu} + \left[(M_{vr})(M_{hu} / M_{vu})\right]}{M_{vu}} \qquad Eq\ 1$$

For the purposes of this calculation, the mass fraction of organic HAP present in the recovered volatile matter is assumed to be equal to the mass fraction of organic HAP present in the volatile matter used.

(G) The affected source is in compliance for the month, if $R_e$is at least 92 percent each month.

(ii) Use continuous emission monitors, conduct an initial performance test of capture efficiency, and continuously monitor a site specific operating parameter to assure capture efficiency as specified in paragraphs (b)(1)(ii)(A) through (b)(1)(ii)(E) of this section:

(A) Install continuous emission monitors to collect the data necessary to calculate the total organic volatile matter mass flow in the gas stream entering and the total organic volatile matter mass flow in the gas stream exiting the solvent recovery device for each month such that the percent control efficiency (E) of the solvent recovery device can be calculated for the month. This requires continuous emission monitoring of the total organic volatile matter concentration in the gas stream entering the solvent recovery device, the total organic volatile matter concentration in the gas stream exiting the solvent recovery device, and the volumetric gas flow rate through the solvent recovery device. A single continuous volumetric gas flow measurement should be sufficient for a solvent recovery device since the inlet and outlet volumetric gas flow rates for a solvent recovery device are essentially equal. Each month's individual inlet concentration values and corresponding individual gas flow rate values are multiplied and then summed to get the

total organic volatile matter mass flow in the gas stream entering the solvent recovery device for the month. Each month's individual outlet concentration values and corresponding individual gas flow rate values are multiplied and then summed to get the total organic volatile matter mass flow in the gas stream exiting the solvent recovery device for the month.

(B) Determine the percent capture efficiency (F) of the capture system according to §63.827(e).

(C) Calculate the overall effective organic HAP control efficiency (R_e) achieved for each month using Equation 2.

$$R_e = (100)\frac{M_{vu} - M_{ku} + \left[(E/100)(F/100)M_{ku}\right]}{M_{vu}} \qquad Eq\ 2$$

(D) Install, calibrate, operate and maintain the instrumentation necessary to measure continuously the site-specific operating parameter established in accordance with §63.828(a)(5) whenever a publication rotogravure printing press is operated.

(E) The affected source is in compliance with the requirement for the month if $R_e$is at least 92 percent, and the capture device is operated at an average value greater than, or less than (as appropriate) the operating parameter value established in accordance with §63.828(a)(5) for each three-hour period.

(2) Each owner or operator using an oxidizer to control emissions shall demonstrate compliance by showing that the HAP emission limitation is achieved by following the procedure in either paragraph (b)(2)(i) or (b)(2)(ii) of this section:

(i) Demonstrate initial compliance through performance tests and continuing compliance through continuous monitoring as follows:

(A) Determine the oxidizer destruction efficiency (E) using the procedure in §63.827(d).

(B) Determine the capture efficiency (F) using the procedure in §63.827(e).

(C) [Reserved]

(D) Calculate the overall effective organic HAP control efficiency (R_e) achieved using Equation 2.

(E) The affected source is in initial compliance if $R_e$is at least 92 percent. Demonstration of continuing compliance is achieved by continuous monitoring of an appropriate oxidizer operating parameter in accordance with §63.828(a)(4), and by continuous monitoring of an appropriate capture system monitoring parameter in accordance with

§63.828(a)(5). The affected source is in continuing compliance if the capture device is operated at an average value greater than or less than (as appropriate) the operating parameter value established in accordance with §63.828(a)(5), and

(*1*) if an oxidizer other than a catalytic oxidizer is used, the average combustion temperature for all three-hour periods is greater than or equal to the average combustion temperature established under §63.827(d), or

(*2*) if a catalytic oxidizer is used, the average catalyst bed inlet temperature for all three-hour periods is greater than or equal to the average catalyst bed inlet temperature established in accordance with §63.827(d).

(ii) Use continuous emission monitors, conduct an initial performance test of capture efficiency, and continuously monitor a site specific operating parameter to assure capture efficiency. The percent control efficiency of the oxidizer shall be demonstrated in accordance with the requirements of paragraph (b)(1)(ii) of this section except that separate continuous measurements of the inlet volumetric gas flow rate and the outlet volumetric gas flow rate are required for an oxidizer.

(3) To demonstrate compliance without the use of a control device, each owner or operator shall compare the mass of organic HAP used to the mass of volatile matter used each month, as specified in paragraphs (b)(3)(i) through (b)(3)(iv) of this section:

(i) Measure the mass of each ink, coating, varnish, adhesive, primer, solvent, and other material used in the affected source during the month.

(ii) Determine the organic HAP content of each ink, coating, varnish, adhesive, primer, solvent, and other material used during the month following the procedure in §63.827(b)(1), and

(iii) Determine the volatile matter content, including water, of each ink, coating, varnish, adhesive, primer, solvent, and other material used during the month following the procedure in §63.827(c)(1).

(iv) The affected source is in compliance for the month if the mass of organic HAP used does not exceed eight percent of the mass of volatile matter used.

[61 FR 27140, May 30, 1996, as amended at 71 FR 29801, May 24, 2006]

§ 63.825 Standards: Product and packaging rotogravure and wide-web flexographic printing.

(a) Each owner or operator of any product and packaging rotogravure or wide-web flexographic printing affected source that is subject to the requirements of this subpart

shall comply with these requirements on and after the compliance dates as specified in §63.826 of this subpart.

(b) Each product and packaging rotogravure or wide-web flexographic printing affected source shall limit organic HAP emissions to no more than 5 percent of the organic HAP applied for the month; or to no more than 4 percent of the mass of inks, coatings, varnishes, adhesives, primers, solvents, reducers, thinners, and other materials applied for the month; or to no more than 20 percent of the mass of solids applied for the month; or to a calculated equivalent allowable mass based on the organic HAP and solids contents of the inks, coatings, varnishes, adhesives, primers, solvents, reducers, thinners, and other materials applied for the month. The owner or operator of each product and packaging rotogravure or wide-web flexographic printing affected source shall demonstrate compliance with this standard by following one of the procedures in paragraphs (b)(1) through (b)(10) of this section:

(1) Demonstrate that each ink, coating, varnish, adhesive, primer, solvent, diluent, reducer, thinner, and other material applied during the month contains no more than 0.04 weight-fraction organic HAP, on an as-purchased basis, as determined in accordance with §63.827(b)(2).

(2) Demonstrate that each ink, coating, varnish, adhesive, primer, and other solids-containing material applied during the month contains no more than 0.04 weight-fraction organic HAP, on a monthly average as-applied basis as determined in accordance with paragraphs (b)(2)(i)–(ii) of this section. The owner or operator shall calculate the as-applied HAP content of materials which are reduced, thinned, or diluted prior to application, as follows:

(i) Determine the organic HAP content of each ink, coating, varnish, adhesive, primer, solvent, diluent, reducer, thinner, and other material applied on an as-purchased basis in accordance with §63.827(b)(2).

(ii) Calculate the monthly average as-applied organic HAP content, C_{ahi} of each ink, coating, varnish, adhesive, primer, and other solids-containing material using Equation 3.

$$C_{ahi} = \frac{\left(C_{hi} M_i + \sum_{j=1}^{q} C_{hij} M_{ij} \right)}{M_i + \sum_{j=1}^{q} M_{ij}} \qquad Eq\ 3$$

(3)(i) Demonstrate that each ink, coating, varnish, adhesive, primer, and other solids-containing material applied, either

(A) Contains no more than 0.04 weight-fraction organic HAP on a monthly average as-applied basis, or

(B) Contains no more than 0.20 kg of organic HAP per kg of solids applied, on a monthly average as-applied basis.

(ii) The owner or operator may demonstrate compliance in accordance with paragraphs (b)(3)(ii) (A)–(C) of this section.

(A) Use the procedures of paragraph (b)(2) of this section to determine which materials meet the requirements of paragraph (b)(3)(i)(A) of this section,

(B) Determine the as-applied solids content following the procedure in §63.827(c)(2) of all materials which do not meet the requirements of paragraph (b)(3)(i)(A) of this section. The owner or operator may calculate the monthly average as-applied solids content of materials which are reduced, thinned, or diluted prior to application, using Equation 4, and

$$C_{asi} = \frac{C_{si} M_i}{M_i + \sum_{j=1}^{q} M_{ij}} \qquad Eq\ 4$$

(C) Calculate the as-applied organic HAP to solids ratio, H_{si}, for all materials which do not meet the requirements of paragraph (b)(3)(i)(A) of this section, using Equation 5.

$$H_{si} = \frac{C_{aki}}{C_{asi}} \qquad Eq\ 5$$

(4) Demonstrate that the monthly average as-applied organic HAP content, H_L, of all materials applied is less than 0.04 kg HAP per kg of material applied, as determined by Equation 6.

$$H_L = \frac{\sum_{i=1}^{p} M_i C_{ki} + \sum_{j=1}^{q} M_j C_{kj}}{\sum_{i=1}^{p} M_i + \sum_{j=1}^{q} M_j} \qquad Eq\ 6$$

(5) Demonstrate that the monthly average as-applied organic HAP content on the basis of solids applied, H_s, is less than 0.20 kg HAP per kg solids applied as determined by Equation 7.

$$H_S = \frac{\sum_{i=1}^{p} M_i C_{ki} + \sum_{j=1}^{q} M_j C_{kj}}{\sum_{i=1}^{p} M_i C_{si}} \qquad Eq\ 7$$

(6) Demonstrate that the total monthly organic HAP applied, H_{app}, as determined by Equation 8, is less than the calculated equivalent allowable organic HAP, H_a, as determined by paragraph (e) of this section.

$$H_{app} = \sum_{i=1}^{p} M_i C_{hi} + \sum_{j=1}^{q} M_j C_{hj} \qquad \text{Eq. 8}$$

Where:

H_{app}= Total monthly organic HAP applied, kg.

(7) Operate a capture system and control device and demonstrate an overall organic HAP control efficiency of at least 95 percent for each month. If the affected source operates more than one capture system or more than one control device, and has only always-controlled work stations, then the owner or operator shall demonstrate compliance in accordance with the provisions of either paragraph (f) or (h) of this section. If the affected source operates one or more never-controlled work stations or one or more intermittently-controllable work stations, then the owner or operator shall demonstrate compliance in accordance with the provisions of paragraph (f) of this section. Otherwise, the owner or operator shall demonstrate compliance in accordance with the procedure in paragraph (c) of this section when emissions from the affected source are controlled by a solvent recovery device or the procedure in paragraph (d) of this section when emissions are controlled by an oxidizer.

(8) Operate a capture system and control device and limit the organic HAP emission rate to no more than 0.20 kg organic HAP emitted per kg solids applied as determined on a monthly average as-applied basis. If the affected source operates more than one capture system, more than one control device, one or more never-controlled work stations, or one or more intermittently-controllable work stations, then the owner or operator shall demonstrate compliance in accordance with the provisions of paragraph (f) of this section. Otherwise, the owner or operator shall demonstrate compliance following the procedure in paragraph (c) of this section when emissions from the affected source are controlled by a solvent recovery device or the procedure in paragraph (d) of this section when emissions are controlled by an oxidizer.

(9) Operate a capture system and control device and limit the organic HAP emission rate to no more than 0.04 kg organic HAP emitted per kg material applied as determined on a monthly average as-applied basis. If the affected source operates more than one capture system, more than one control device, one or more never-controlled work stations, or one or more intermittently-controllable work stations, then the owner or operator shall demonstrate compliance in accordance with the provisions of paragraph (f) of this section. Otherwise, the owner or operator shall demonstrate compliance following the procedure in paragraph (c) of this section when emissions from the affected source are controlled by a solvent recovery device or the procedure in paragraph (d) of this section when emissions are controlled by an oxidizer.

(10) Operate a capture system and control device and limit the monthly organic HAP emissions to less than the allowable emissions as calculated in accordance with paragraph (e) of this section. If the affected source operates more than one capture system, more than one control device, one or more never-controlled work stations, or one or more intermittently-controllable work stations, then the owner or operator shall demonstrate compliance in accordance with the provisions of paragraph (f) of this section. Otherwise, the owner or operator shall demonstrate compliance following the procedure in paragraph (c) of this section when emissions from the affected source are controlled by a solvent recovery device or the procedure in paragraph (d) of this section when emissions are controlled by an oxidizer.

(c) To demonstrate compliance with the overall organic HAP control efficiency requirement in §63.825(b)(7) or the organic HAP emissions limitation requirements in §63.825(b)(8)–(10), each owner or operator using a solvent recovery device to control emissions shall show compliance by following the procedures in either paragraph (c)(1) or (c)(2) of this section:

(1) Perform a liquid-liquid material balance for each and every month as follows:

(i) Measure the mass of each ink, coating, varnish, adhesive, primer, solvent and other material applied on the press or group of presses controlled by a common solvent recovery device during the month.

(ii) If demonstrating compliance on the basis of organic HAP emission rate based on solids applied, organic HAP emission rate based on material applied or emission of less than the calculated allowable organic HAP, determine the organic HAP content of each ink, coating, varnish, adhesive, primer, solvent, and other material applied during the month following the procedure in §63.827(b)(2).

(iii) Determine the volatile matter content of each ink, coating, varnish, adhesive, primer, solvent, and other material applied during the month following the procedure in §63.827(c)(2).

(iv) If demonstrating compliance on the basis of organic HAP emission rate based on solids applied or emission of less than the calculated allowable organic HAP, determine the solids content of each ink, coating, varnish, adhesive, primer, solvent, and other material applied during the month following the procedure in §63.827(c)(2).

(v) Install, calibrate, maintain, and operate according to the manufacturer's specifications, a device that indicates the cumulative amount of volatile matter recovered by the solvent recovery device on a monthly basis. The device shall be initially certified by the manufacturer to be accurate to within ±2.0 percent.

(vi) Measure the amount of volatile matter recovered for the month.

(vii) Calculate the volatile matter collection and recovery efficiency, R_v, using Equation 9.

$$R_v = 100 \frac{M_{vr}}{\sum_{i=1}^{p} M_i C_{vi} + \sum_{j=1}^{q} M_j} \qquad Eq\ 9$$

(viii) If demonstrating compliance on the basis of organic HAP emission rate based on solids applied, organic HAP emission rate based on material applied or emission of less than the calculated allowable organic HAP, calculate the organic HAP emitted during the month, H, using Equation 10.

$$H = \left[1 - \frac{R_v}{100}\right]\left[\sum_{i=1}^{p}\left(C_{hi} M_i + \sum_{j=1}^{q} C_{hij} M_{ij}\right)\right] \qquad Eq\ 10$$

(ix) If demonstrating compliance on the basis of organic HAP emission rate based on solids applied, calculate the organic HAP emission rate based on solids applied, L, using Equation 11.

$$L = \frac{H}{\sum_{i=1}^{p} C_{si} M_i} \qquad Eq\ 11$$

(x) If demonstrating compliance on the basis of organic HAP emission rate based on materials applied, calculate the organic HAP emission rate based on material applied, S, using Equation 12.

$$S = \frac{H}{\sum_{i=1}^{p}\left[M_i + \sum_{j=1}^{q} M_{ij}\right]} \qquad Eq\ 12$$

(xi) The affected source is in compliance if

(A) The organic volatile matter collection and recovery efficiency, R_v, is 95 percent or greater, or

(B) ***The organic HAP emission rate based on solids applied, L, is 0.20 kg organic HAP per kg solids applied or less, or***

(C) the organic HAP emission rate based on material applied, S, is 0.04 kg organic HAP per kg material applied or less, or

(D) the organic HAP emitted during the month, H, is less than the calculated allowable organic HAP, H_a, as determined using paragraph (e) of this section.

(2) Use continuous emission monitors, conduct an initial performance test of capture efficiency, and continuously monitor a site specific operating parameter to assure capture efficiency following the procedures in paragraphs (c)(2)(i) through (c)(2)(xi) of this section:

(i) If demonstrating compliance on the basis of organic HAP emission rate based on solids applied, organic HAP emission rate based on materials applied, or emission of less than the calculated allowable organic HAP, measure the mass of each ink, coating, varnish, adhesive, primer, solvent, and other material applied on the press or group of presses controlled by a common control device during the month.

(ii) If demonstrating compliance on the basis of organic HAP emission rate based on solids applied, organic HAP emission rate based on material applied or emission of less than the calculated allowable organic HAP, determine the organic HAP content of each ink, coating, varnish, adhesive, primer, solvent, and other material applied during the month following the procedure in §63.827(b)(2).

(iii) Install continuous emission monitors to collect the data necessary to calculate the total organic volatile matter mass flow in the gas stream entering and the total organic volatile mass flow in the gas stream exiting the solvent recovery device for each month such that the percent control efficiency (E) of the solvent recovery device can be calculated for the month. This requires continuous emission monitoring of the total organic volatile matter concentration in the gas stream entering the solvent recovery device, the total organic volatile matter concentration in the gas stream exiting the solvent recovery device, and the volumetric gas flow rate through the solvent recovery device. A

single continuous volumetric gas flow measurement should be sufficient for a solvent recovery device since the inlet and outlet volumetric gas flow rates for a solvent recovery device are essentially equal. Each month's individual inlet concentration values and corresponding individual gas flow rate values are multiplied and then summed to get the total organic volatile matter mass flow in the gas stream entering the solvent recovery device for the month. Each month's individual outlet concentration values and corresponding individual gas flow rate values are multiplied and then summed to get the total organic volatile matter mass flow in the gas stream exiting the solvent recovery device for the month.

(iv) If demonstrating compliance on the basis of organic HAP emission rate based on solids applied or emission of less than the calculated allowable organic HAP, determine the solids content of each ink, coating, varnish, adhesive, primer, solvent, and other material applied during the month following the procedure in §63.827(c)(2).

(v) Install, calibrate, operate and maintain the instrumentation necessary to measure continuously the site-specific operating parameter established in accordance with §63.828(a)(5) whenever a product and packaging rotogravure or wide-web flexographic printing press is operated.

(vi) Determine the capture efficiency (F) in accordance with §63.827(e)–(f).

(vii) Calculate the overall organic HAP control efficiency, (R), achieved for each month using Equation 13.

$$R = \frac{EF}{100} \qquad Eq\ 13$$

(viii) If demonstrating compliance on the basis of organic HAP emission rate based on solids applied, organic HAP emission rate based on material applied or emission of less than the calculated allowable organic HAP, calculate the organic HAP emitted during the month, H, for each month using Equation 14.

$$H = \left[1 - \left(\frac{E}{100}\frac{F}{100}\right)\right]\left[\sum_{i=1}^{p}\left(C_{ki}M_i + \sum_{j=1}^{q} C_{kij}M_{ij}\right)\right] \qquad Eq\ 14$$

(ix) If demonstrating compliance on the basis of organic HAP emission rate based on solids applied, calculate the organic HAP emission rate based on solids applied, L, using Equation 15.

$$L = \frac{H}{\sum_{i=1}^{p} C_{si} M_i} \qquad Eq\ 15$$

(x) If demonstrating compliance on the basis of organic HAP emission rate based on materials applied, calculate the organic HAP emission rate based on material applied, S, using Equation 16.

$$S = \frac{H}{\sum_{i=1}^{p} \left[M_i + \sum_{j=1}^{q} M_{ij} \right]} \qquad Eq\ 16$$

(xi) The affected source is in compliance if the capture system operating parameter is operated at an average value greater than or less than (as appropriate) the operating parameter value established in accordance with §63.828(a)(5) for each three hour period, and

(A) The organic volatile matter collection and recovery efficiency, R_v, is 95 percent or greater, or

(B) The organic HAP emission rate based on solids applied, L, is 0.20 kg organic HAP per kg solids applied or less, or

(C) The organic HAP emission rate based on material applied, S, is 0.04 kg organic HAP per kg material applied or less, or

(D) The organic HAP emitted during the month, H, is less than the calculated allowable organic HAP, H_a, as determined using paragraph (e) of this section.

(d) To demonstrate compliance with the overall organic HAP control efficiency requirement in §63.825(b)(7) or the overall organic HAP emission rate limitation requirements in §63.825(b)(8)–(10), each owner or operator using an oxidizer to control emissions shall show compliance by following the procedures in either paragraph (d)(1) or (d)(2) of this section:

(1) Demonstrate initial compliance through performance tests of capture efficiency and control device efficiency and continuing compliance through continuous monitoring of capture system and control device operating parameters following the procedures in paragraph (d)(1)(i) through (d)(1)(xi) of this section:

(i) Determine the oxidizer destruction efficiency (E) using the procedure in §63.827(d).

(ii) Determine the capture system capture efficiency (F) in accordance with §63.827(e)–(f).

(iii) Calculate the overall organic HAP control efficiency, (R), achieved using Equation 13.

(iv) If demonstrating compliance on the basis of organic HAP emission rate based on solids applied, organic HAP emission rate based on materials applied, or emission of less than the calculated allowable organic HAP, measure the mass of each ink, coating, varnish, adhesive, primer, solvent, and other material applied on the press or group of presses controlled by a common control device during the month.

(v) If demonstrating compliance on the basis of organic HAP emission rate based on solids applied, organic HAP emission rate based on material applied or emission of less than the calculated allowable organic HAP, determine the organic HAP content of each ink, coating, varnish, adhesive, primer, solvent, and other material applied during the month following the procedure in §63.827(b)(2).

(vi) If demonstrating compliance on the basis of organic HAP emission rate based on solids applied or emission of less than the calculated allowable organic HAP, determine the solids content of each ink, coating, varnish, adhesive, primer, solvent, and other material applied during the month following the procedure in §63.827(c)(2).

(vii) If demonstrating compliance on the basis of organic HAP emission rate based on solids applied, organic HAP emission rate based on material applied or emission of less than the calculated allowable organic HAP, calculate the organic HAP emitted during the month, H, for each month using Equation 14.

(viii) If demonstrating compliance on the basis of organic HAP emission rate based on solids applied, calculate the organic HAP emission rate based on solids applied, L, for each month using Equation 15.

(ix) If demonstrating compliance on the basis of organic HAP emission rate based on materials applied, calculate the organic HAP emission rate based on material applied, S, using Equation 16.

(x) Install, calibrate, operate and maintain the instrumentation necessary to measure continuously the site-specific operating parameters established in accordance with §63.828(a)(4)–(5) whenever a product and packaging rotogravure or wide-web flexographic press is operating.

(xi) The affected source is in compliance, if the oxidizer is operated such that the average operating parameter value is greater than the operating parameter value established in accordance with §63.828(a)(4) for each three-hour period, and the capture system operating parameter is operated at an average value greater than or less than (as

appropriate) the operating parameter value established in accordance with §63.828(a)(5) for each three hour period, and

(A) The overall organic HAP control efficiency, R, is 95 percent or greater, or

(B) The organic HAP emission rate based on solids applied, L, is 0.20 kg organic HAP per kg solids applied or less, or

(C) The organic HAP emission rate based on material applied, S, is 0.04 kg organic HAP per kg material applied or less, or

(D) The organic HAP emitted during the month, H, is less than the calculated allowable organic HAP, H_a, as determined using paragraph (e) of this section.

(2) Use continuous emission monitors, conduct an initial performance test of capture efficiency, and continuously monitor a site specific operating parameter to assure capture efficiency. The percent control efficiency of the oxidizer shall be demonstrated in accordance with the requirements of paragraph (c)(2) of this section except that separate continuous volumetric gas flow measurements of the inlet and outlet volumetric gas flow rates are required for an oxidizer.

(e) Owners or operators may calculate the monthly allowable HAP emissions, H_a, for demonstrating compliance in accordance with paragraph (b)(6), (c)(1)(xi)(D), (c)(2)(xi)(D), or (d)(1)(xi)(D) of this section as follows:

(1) Determine the as-purchased mass of each ink, coating, varnish, adhesive, primer, and other solids-containing material applied each month, M_i.

(2) Determine the as-purchased solids content of each ink, coating, varnish, adhesive, primer, and other solids-containing material applied each month, in accordance with §63.827(c)(2), C_{si}.

(3) Determine the as-purchased mass fraction of each ink, coating, varnish, adhesive, primer, and other solids-containing material which was applied at 20 weight-percent or greater solids content, on an as-applied basis, G_i.

(4) Determine the total mass of each solvent, diluent, thinner, or reducer added to materials which were applied at less than 20 weight-percent solids content, on an as-applied basis, each month, M_{Lj}.

(5) Calculate the monthly allowable HAP emissions, H_a, using Equation 17.

$$H_a = 0.20\left[\sum_{i=1}^{p} M_i G_i C_{si}\right] + 0.04\left[\sum_{i=1}^{p} M_i\left(1-G_i\right) + \sum_{j=1}^{q} M_{Lj}\right] \qquad Eq\ 17$$

(f) Owners or operators of product and packaging rotogravure or wide-web flexographic printing presses shall demonstrate compliance according to the procedures in paragraphs (f)(1) through (f)(7) of this section if the affected source operates more than one capture system, more than one control device, one or more never-controlled work stations, or one or more intermittently-controllable work stations.

(1) The owner or operator of each solvent recovery system used to control one or more product and packaging rotogravure or wide-web flexographic presses for which the owner or operator chooses to comply by means of a liquid-liquid mass balance shall determine the organic HAP emissions for those presses controlled by that solvent recovery system either

(i) in accordance with paragraphs (c)(1)(i)–(iii) and (c)(1)(v)–(viii) of this section if the presses controlled by that solvent recovery system have only always-controlled work stations, or

(ii) in accordance with paragraphs (c)(1)(ii)–(iii), (c)(1)(v)–(vi), and (g) of this section if the presses controlled by that solvent recovery system have one or more never-controlled or intermittently-controllable work stations.

(2) The owner or operator of each solvent recovery system used to control one or more product and packaging rotogravure or wide-web flexographic presses, for which the owner or operator chooses to comply by means of an initial test of capture efficiency, continuous emission monitoring of the control device, and continuous monitoring of a capture system operating parameter, shall

(i) For each capture system delivering emissions to that solvent recovery system, monitor an operating parameter established in accordance with §63.828(a)(5) to assure capture system efficiency, and

(ii) Determine the organic HAP emissions for those presses served by each capture system delivering emissions to that solvent recovery system either

(A) In accordance with paragraphs (c)(2)(i)–(iii) and (c)(2)(v)–(viii) of this section if the presses served by that capture system have only always-controlled work stations, or

(B) In accordance with paragraphs (c)(2)(ii)–(iii), (c)(2)(v)–(vii), and (g) of this section if the presses served by that capture system have one or more never-controlled or intermittently-controllable work stations.

(3) The owner or operator of each oxidizer used to control emissions from one or more product and packaging rotogravure or wide-web flexographic presses choosing to demonstrate compliance through performance tests of capture efficiency and control device efficiency and continuing compliance through continuous monitoring of capture system and control device operating parameters, shall

(i) Monitor an operating parameter established in accordance with §63.828(a)(4) to assure control device efficiency, and

(ii) For each capture system delivering emissions to that oxidizer, monitor an operating parameter established in accordance with §63.828(a)(5) to assure capture efficiency, and

(iii) Determine the organic HAP emissions for those presses served by each capture system delivering emissions to that oxidizer either

(A) In accordance with paragraphs (d)(1)(i)–(v) and (d)(1)(vii) of this section if the presses served by that capture system have only always-controlled work stations, or

(B) In accordance with paragraphs (d)(1)(i)–(iii), (d)(1)(v), and (g) of this section if the presses served by that capture system have one or more never-controlled or intermittently-controllable work stations.

(4) The owner or operator of each oxidizer used to control emissions from one or more product and packaging rotogravure or wide-web flexographic presses choosing to demonstrate compliance through an initial capture efficiency test, continuous emission monitoring of the control device and continuous monitoring of a capture system operating parameter, shall

(i) For each capture system delivering emissions to that oxidizer, monitor an operating parameter established in accordance with §63.828(a)(5) to assure capture efficiency, and

(ii) Determine the organic HAP emissions for those presses served by each capture system delivering emissions to that oxidizer either

(A) In accordance with paragraphs (c)(2)(i)–(iii) and (c)(2)(v)–(viii) of this section if the presses served by that capture system have only always-controlled work stations, or

(B) In accordance with paragraphs (c)(2)(ii)–(iii), (c)(2)(v)–(vii), and (g) of this section if the presses served by that capture system have one or more never-controlled or intermittently-controllable work stations.

(5) The owner or operator of one or more uncontrolled product and packaging rotogravure or wide-web flexographic printing presses shall determine the organic HAP applied on those presses using Equation 8. The organic HAP emitted from an uncontrolled press is equal to the organic HAP applied on that press.

(6) If demonstrating compliance on the basis of organic HAP emission rate based on solids applied or emission of less than the calculated allowable organic HAP, the owner or operator shall determine the solids content of each ink, coating, varnish, adhesive, primer, solvent and other material applied during the month following the procedure in §63.827(c)(2).

(7) The owner or operator shall determine the organic HAP emissions for the affected source for the month by summing all organic HAP emissions calculated according to paragraphs (f)(1), (f)(2)(ii), (f)(3)(iii), (f)(4)(ii), and (f)(5) of this section. The affected source is in compliance for the month, if all operating parameters required to be monitored under paragraphs (f)(2)–(4) of this section were maintained at the appropriate values, and

(i) The total mass of organic HAP emitted by the affected source was not more than four percent of the total mass of inks, coatings, varnishes, adhesives, primers, solvents, diluents, reducers, thinners and other materials applied by the affected source, or

(ii) The total mass of organic HAP emitted by the affected source was not more than 20 percent of the total mass of solids applied by the affected source, or

(iii) The total mass of organic HAP emitted by the affected source was not more than the equivalent allowable organic HAP emissions for the affected source, H_a, calculated in accordance with paragraph (e) of this section, or

(iv) The total mass of organic HAP emitted by the affected source was not more than five percent of the total mass of organic HAP applied by the affected source. The total mass of organic HAP applied by the affected source in the month shall be determined by the owner or operator using Equation 8.

(g) Owners or operators determining organic HAP emissions from a press or group of presses having one or more never-controlled or intermittently-controllable work stations and using the procedures specified in paragraphs (f)(1)(ii), (f)(2)(ii)(B), (f)(3)(iii)(B), or (f)(4)(ii)(B) of this section shall for that press or group of presses:

(1) Determine the sum of the mass of all inks, coatings, varnishes, adhesives, primers, and other solids-containing materials which are applied on intermittently-controllable work stations in bypass mode and the mass of all inks, coatings, varnishes, adhesives, primers, and other solids-containing materials which are applied on never-controlled work stations during the month, M_{Bi}.

(2) Determine the sum of the mass of all solvents, reducers, thinners, and other diluents which are applied on intermittently-controllable work stations in bypass mode and the mass of all solvents, reducers, thinners, and other diluents which are applied on never-controlled work stations during the month, M_{Bj}.

(3) Determine the sum of the mass of all inks, coatings, varnishes, adhesives, primers, and other solids-containing materials which are applied on intermittently-controllable work stations in controlled mode and the mass of all inks, coatings, varnishes, adhesives, primers, and other solids-containing materials which are applied on always-controlled work stations during the month, M_{Bj}.

(4) Determine the sum of the mass of all solvents, reducers, thinners, and other diluents which are applied on intermittently-controllable work stations in controlled mode and the mass of all solvents, reducers, thinners, and other diluents which are applied on always-controlled work stations during the month, M_{Cj}.

(5) For each press or group of presses for which the owner or operator uses the provisions of paragraph (f)(1)(ii) of this section, the owner or operator shall calculate the organic HAP emitted during the month using Equation 18.

$$H = \left[\sum_{i=1}^{p} M_{Ci} C_{ki} + \sum_{j=1}^{q} M_{Cj} C_{kj}\right]\left[1 - \frac{M_{vr}}{\sum_{i=1}^{p} M_{Ci} C_{vi} + \sum_{j=1}^{q} M_{Cj}}\right] + \left[\sum_{i=1}^{p} M_{Bi} C_{ki} + \sum_{j=1}^{q} M_{Bj} C_{kj}\right]$$

(6) For each press or group of presses for which the owner or operator uses the provisions of paragraphs (f)(2)(ii)(B), (f)(3)(iii)(B), or (f)(4)(ii)(B) of this section, the owner or operator shall calculate the organic HAP emitted during the month using Equation (19).

$$H = \left[\sum_{i=1}^{p} M_{Ci} C_{ki} + \sum_{j=1}^{q} M_{Cj} C_{kj}\right]\left[1 - \left(\frac{E}{100}\frac{F}{100}\right)\right] + \left[\sum_{i=1}^{p} M_{Bi} C_{ki} + \sum_{j=1}^{q} M_{Bj} C_{kj}\right] \qquad Eq\ 1$$

(h) If the affected source operates more than one capture system or more than one control device, and has no never-controlled work stations and no intermittently-controllable work stations, then the affected source is in compliance with the 95 percent overall organic HAP control efficiency requirement for the month if for each press or group of presses controlled by a common control device:

(1) The volatile matter collection and recovery efficiency, R_v, as determined by paragraphs (c)(1)(i), (c)(1)(iii), and (c)(1)(v)–(vii) of this section is equal to or greater than 95 percent, or

(2) The overall organic HAP control efficiency as determined by paragraphs (c)(2)(iii) and (c)(2)(v)–(vii) of this section for each press or group of presses served by that control device and a common capture system is equal to or greater than 95 percent and the average capture system operating parameter value for each capture system serving that control device is greater than or less than (as appropriate) the operating parameter value established for that capture system in accordance with §63.828(a)(5) for each three hour period, or

(3) The overall organic HAP control efficiency as determined by paragraphs (d)(1)(i)–(iii) and (d)(1)(x) of this section for each press or group of presses served by that control

device and a common capture system is equal to or greater than 95 percent, the oxidizer is operated such that the average operating parameter value is greater than the operating parameter value established in accordance with §63.828(a)(4) for each three hour period, and the average capture system operating parameter value for each capture system serving that control device is greater than or less than (as appropriate) the operating parameter value established for that capture system in accordance with §63.828(a)(5) for each three hour period.

[61 FR 27140, May 30, 1996, as amended at 71 FR 29801, May 24, 2006]

§ 63.826 Compliance dates.

(a) The compliance date for an owner or operator of an existing affected source subject to the provisions of this subpart is May 30, 1999.

(b) The compliance date for an owner or operator of a new affected source subject to the provisions of this subpart is immediately upon start-up of the affected source, or May 30, 1996, whichever is later.

(c) Affected sources which have undergone reconstruction are subject to the requirements for new affected sources. The costs associated with the purchase and installation of air pollution control equipment are not considered in determining whether the affected source has been reconstructed. Additionally, the costs of retrofitting and replacement of equipment that is installed specifically to comply with this subpart are not considered reconstruction costs.

§ 63.827 Performance test methods.

Performance tests shall be conducted under such conditions as the Administrator specifies to the owner or operator based on representative performance of the affected source for the period being tested. Upon request, the owner or operator shall make available to the Administrator such records as may be necessary to determine the conditions of performance tests.

(a) An owner or operator using a control device to comply with the requirements of §§63.824–63.825 is not required to conduct an initial performance test to demonstrate compliance if one or more of the criteria in paragraphs (a)(1) through (a)(3) of this section are met:

(1) A control device that is in operation prior to May 30, 1996, does not need to be tested if

(i) It is equipped with continuous emission monitors for determining total organic volatile matter concentration and the volumetric gas flow rate, and capture efficiency has been determined in accordance with the requirements of this subpart, such that an overall organic HAP control efficiency can be calculated, and

(ii) The continuous emission monitors are used to demonstrate continuous compliance in accordance with §63.824(b)(1)(ii), §63.825(b)(2)(ii), §63.825(c)(2), or §63.825(d)(2), as applicable, and §63.828, or

(2) The owner or operator has met the requirements of either §63.7(e)(2)(iv) or §63.7(h), or

(3) The control device is a solvent recovery system and the owner or operator chooses to comply by means of a monthly liquid-liquid material balance.

(b) Determination of the weight fraction organic HAP of inks, coatings, varnishes, adhesives, primers, solvents, thinners, reducers, diluents, and other materials used by a publication rotogravure affected source shall be conducted according to paragraph (b)(1) of this section. Determination of the weight fraction organic HAP of inks, coatings, varnishes, adhesives, primers, solvents, thinners, reducers, diluents, and other materials applied by a product and packaging rotogravure or wide-web flexographic printing affected source shall be conducted according to paragraph (b)(2) of this section. If the weight fraction organic HAP values are not determined using the procedures in paragraphs (b)(1) or (b)(2) of this section, the owner or operator must submit an alternative test method for determining their values for approval by the Administrator in accordance with §63.7(f). The recovery efficiency of the test method must be determined for all of the target organic HAP and a correction factor, if necessary, must be determined and applied.

(1) Each owner or operator of a publication rotogravure affected source shall determine the weight fraction organic HAP of each ink, coating, varnish, adhesive, primer, solvent, and other material used by following one of the procedures in paragraphs (b)(1)(i) through (iii) of this section:

(i) The owner or operator may test the material in accordance with Method 311 of appendix A of this part. The Method 311 determination may be performed by the owner or operator of the affected source, the supplier of the material, or an independent third party. The organic HAP content determined by Method 311 must be calculated according to the criteria and procedures in paragraphs (b)(1)(i)(A) through (C) of this section.

(A) Include each organic HAP determined to be present at greater than or equal to 0.1 weight percent for Occupational Safety and Health Administration (OSHA)-defined carcinogens as specified in 29 CFR 1910.1200(d)(4) and greater than or equal to 1.0 weight percent for other organic HAP compounds.

(B) Express the weight fraction of each organic HAP included according to paragraph (b)(1)(i)(A) of this section as a value truncated to four places after the decimal point (for example, 0.3791).

(C) Calculate the total weight fraction of organic HAP in the tested material by summing the weight fraction of each organic HAP included according to paragraph (b)(1)(i)(A) of this section and truncating the result to three places after the decimal point (for example, 0.763).

(ii) The owner or operator may determine the weight fraction volatile matter of the material in accordance with §63.827(c)(1) and use this value for the weight fraction organic HAP for all compliance purposes.

(iii) The owner or operator may use formulation data to determine the weight fraction organic HAP of a material. Formulation data may be provided to the owner or operator on a CPDS by the supplier of the material or an independent third party. Formulation data may be used provided that the weight fraction organic HAP is calculated according to the criteria and procedures in paragraphs (b)(1)(iii)(A) through (D) of this section. In the event of an inconsistency between the formulation data and the result of Method 311 of appendix A of this part, where the test result is higher, the Method 311 data will take precedence unless, after consultation, the owner or operator can demonstrate to the satisfaction of the enforcement agency that the formulation data are correct.

(A) For each raw material used in making the material, include each organic HAP present in that raw material at greater than or equal to 0.1 weight percent for OSHA-defined carcinogens as specified in 29 CFR 1910.1200(d)(4) and greater than or equal to 1.0 weight percent for other organic HAP compounds. The weight fraction of each such organic HAP in each raw material must be determined by Method 311 of appendix A of this part, by an alternate method approved by the Administrator, or from a CPDS provided by the raw material supplier or an independent third party. The weight fraction of each such organic HAP in each raw material must be expressed as a value truncated to four places after the decimal point (for example, 0.1291).

(B) For each raw material used in making the material, the weight fraction contribution of each organic HAP, which is included according to paragraph (b)(1)(iii)(A) of this section, in that raw material to the weight fraction organic HAP of the material is calculated by multiplying the weight fraction, truncated to four places after the decimal point (for example, 0.1291), of that organic HAP in that raw material times the weight fraction of that raw material, truncated to four places after the decimal point (for example, 0.2246), in the material. The product of each such multiplication is to be truncated to four places after the decimal point (for example, 0.1291 times 0.2246 yields 0.02899586 which truncates to 0.0289).

(C) For each organic HAP which is included according to paragraph (b)(1)(iii)(A) of this section, the total weight fraction of that organic HAP in the material is calculated by adding the weight fraction contribution of that organic HAP from each raw material in which that organic HAP is included according to paragraph (b)(1)(iii)(A) of this section. The sum of each such addition must be expressed to four places after the decimal point.

(D) The total weight fraction of organic HAP in the material is the sum of the counted individual organic HAP weight fractions. This sum must be truncated to three places after the decimal point (for example, 0.763).

(2) Each owner or operator of a product and packaging rotogravure or wide-web flexographic printing affected source shall determine the organic HAP weight fraction of each ink, coating, varnish, adhesive, primer, solvent, and other material applied by following one of the procedures in paragraphs (b)(2)(i) through (iii) of this section:

(i) The owner or operator may test the material in accordance with Method 311 of appendix A of this part. The Method 311 determination may be performed by the owner or operator of the affected source, the supplier of the material, or an independent third party. The organic HAP content determined by Method 311 must be calculated according to the criteria and procedures in paragraphs (b)(2)(i)(A) through (C) of this section.

(A) Include each organic HAP determined to be present at greater than or equal to 0.1 weight percent for OSHA-defined carcinogens as specified in 29 CFR 1910.1200(d)(4) and greater than or equal to 1.0 weight percent for other organic HAP compounds.

(B) Express the weight fraction of each organic HAP included according to paragraph (b)(2)(i)(A) of this section as a value truncated to four places after the decimal point (for example, 0.3791).

(C) Calculate the total weight fraction of organic HAP in the tested material by summing the weight fraction of each organic HAP included according to paragraph (b)(2)(i)(A) of this section and truncating the result to three places after the decimal point (for example, 0.763).

(ii) The owner or operator may determine the weight fraction volatile matter of the material in accordance with §63.827(c)(2) and use this value for the weight fraction organic HAP for all compliance purposes.

(iii) The owner or operator may use formulation data to determine the weight fraction organic HAP of a material. Formulation data may be provided to the owner or operator on a CPDS by the supplier of the material or an independent third party. Formulation data may be used provided that the weight fraction organic HAP is calculated according to the criteria and procedures in paragraphs (b)(2)(iii)(A) through (D) of this section. In the event of an inconsistency between the formulation data and the result of Method 311 of appendix A of this part, where the test result is higher, the Method 311 data will take precedence unless, after consultation, the owner or operator can demonstrate to the satisfaction of the enforcement agency that the formulation data are correct.

(A) For each raw material used in making the material, include each organic HAP present in that raw material at greater than or equal to 0.1 weight percent for OSHA-defined carcinogens as specified in 29 CFR 1910.1200(d)(4) and greater than or equal to 1.0

weight percent for other organic HAP compounds. The weight fraction of each such organic HAP in each raw material must be determined by Method 311 of appendix A of this part, by an alternate method approved by the Administrator, or from a CPDS provided by the raw material supplier or an independent third party. The weight fraction of each such organic HAP in each raw material must be expressed as a value truncated to four places after the decimal point (for example, 0.1291).

(B) For each raw material used in making the material, the weight fraction contribution of each organic HAP, which is included according to paragraph (b)(2)(iii)(A) of this section, in that raw material to the weight fraction organic HAP of the material is calculated by multiplying the weight fraction, truncated to four places after the decimal point (for example, 0.1291), of that organic HAP in that raw material times the weight fraction of that raw material, truncated to four places after the decimal point (for example, 0.2246), in the material. The product of each such multiplication is truncated to four places after the decimal point (for example, 0.1291 times 0.2246 yields 0.02899586 which truncates to 0.0289).

(C) For each organic HAP which is included according to paragraph (b)(2)(iii)(A) of this section, the total weight fraction of that organic HAP in the material is calculated by adding the weight fraction contribution of that organic HAP from each raw material in which that organic HAP is included according to paragraph (b)(2)(iii)(A) of this section. The sum of each such addition must be expressed to four places after the decimal point.

(D) The total weight fraction of organic HAP in the material is the sum of the counted individual organic HAP weight fractions. This sum is to be truncated to three places after the decimal point (for example, 0.763).

(c) Determination of the weight fraction volatile matter content of inks, coatings, varnishes, adhesives, primers, solvents, reducers, thinners, diluents, and other materials used by a publication rotogravure affected source shall be conducted according to paragraph (c)(1) of this section. Determination of the weight fraction volatile matter content and weight fraction solids content of inks, coatings, varnishes, adhesives, primers, solvents, reducers, thinners, diluents, and other materials applied by a product and packaging rotogravure or wide-web flexographic printing affected source shall be conducted according to paragraph (c)(2) of this section.

(1) Each owner or operator of a publication rotogravure affected source shall determine the volatile matter weight fraction of each ink, coating, varnish, adhesive, primer, solvent, reducer, thinner, diluent, and other material used by following the procedures in paragraph (b)(1)(i) of this section, or by using formulation data as described in paragraph (c)(3) of this section.

(i) Determine the volatile matter weight fraction of the material using Method 24A of 40 CFR part 60, appendix A. The Method 24A determination may be performed by the owner or operator of the affected source, the supplier of the material, or an independent

third party. The Method 24A result shall be truncated to three places after the decimal point (for example, 0.763). If these values cannot be determined using Method 24A, the owner or operator shall submit an alternative technique for determining their values for approval by the Administrator.

(2) Each owner or operator of a product and packaging rotogravure or wide-web flexographic printing affected source shall determine the volatile matter weight fraction and solids weight fraction of each ink, coating, varnish, adhesive, primer, solvent, reducer, thinner, diluent, and other material applied by following the procedures in paragraphs (b)(2)(i) and (ii) of this section, or by using formulation data as described in paragraph (c)(3) of this section.

(i) Determine the volatile matter weight fraction of the material using Method 24 of 40 CFR part 60, appendix A. The Method 24 determination may be performed by the owner or operator of the affected source, the supplier of the material, or an independent third party. The Method 24 result shall be truncated to three places after the decimal point (for example, 0.763). If these values cannot be determined using Method 24, the owner or operator shall submit an alternative technique for determining their values for approval by the Administrator.

(ii) Calculate the solids weight fraction Method 24 result by subtracting the volatile matter weight fraction Method 24 result from 1.000. This calculation may be performed by the owner or operator, the supplier of the material, or an independent third party.

(3) The owner or operator may use formulation data to determine the volatile matter weight fraction or solids weight fraction of a material. Formulation data may be provided to the owner or operator on a CPDS by the supplier of the material or an independent third party. The volatile matter weight fraction and solids weight fraction shall be truncated to three places after the decimal point (for example, 0.763). In the event of any inconsistency between the formulation data and the result of Method 24 or Method 24A of 40 CFR part 60, appendix A, where the test result for volatile matter weight fraction is higher or the test result for solids weight fraction is lower, the applicable test method data will take precedence unless, after consultation, the owner or operator can demonstrate to the satisfaction of the enforcement agency that the formulation data are correct.

(d) A performance test of a control device to determine destruction efficiency for the purpose of meeting the requirements of §§63.824–63.825 shall be conducted by the owner or operator in accordance with the following:

(1) An initial performance test to establish the destruction efficiency of an oxidizer and the associated combustion zone temperature for a thermal oxidizer and the associated catalyst bed inlet temperature for a catalytic oxidizer shall be conducted and the data reduced in accordance with the following reference methods and procedures:

(i) Method 1 or 1A of 40 CFR part 60, appendix A is used for sample and velocity traverses to determine sampling locations.

(ii) Method 2, 2A, 2C, or 2D of 40 CFR part 60, appendix A is used to determine gas volumetric flow rate.

(iii) Method 3 of 40 CFR part 60, appendix A is used for gas analysis to determine dry molecular weight.

(iv) Method 4 of 40 CFR part 60, appendix A is used to determine stack gas moisture.

(v) Methods 2, 2A, 3, and 4 of 40 CFR part 60, appendix A shall be performed, as applicable, at least twice during each test period.

(vi) Method 25 of 40 CFR part 60, appendix A, shall be used to determine organic volatile matter concentration, except as provided in paragraphs (d)(1)(vi)(A) through (D) of this section. The owner or operator shall submit notice of the intended test method to the Administrator for approval along with notice of the performance test required under §63.7(c). The same method must be used for both the inlet and outlet measurements. The owner or operator may use Method 25A of 40 CFR part 60, appendix A, if (A) An exhaust gas organic volatile matter concentration of 50 parts per million by volume (ppmv) or less as carbon is required to comply with the standards of §§63.824–63.825, or

(B) The organic volatile matter concentration at the inlet to the control system and the required level of control are such to result in exhaust gas organic volatile matter concentrations of 50 ppmv or less as carbon, or

(C) Because of the high efficiency of the control device, the anticipated organic volatile matter concentration at the control device exhaust is 50 ppmv or less as carbon, regardless of inlet concentration, or

(D) The control device is not an oxidizer.

(vii) Each performance test shall consist of three separate runs; each run conducted for at least one hour under the conditions that exist when the affected source is operating under normal operating conditions. For the purpose of determining organic volatile matter concentrations and mass flow rates, the average of results of all runs shall apply.

(viii) Organic volatile matter mass flow rates shall be determined using Equation 20:

$$M_f = Q_{sd} C_c [12.0][0.0416][10^{-6}] \qquad \text{Eq. 20}$$

Where:

M_f= Total organic volatile matter mass flow rate, kg/hour (h).

Q_{sd}= Volumetric flow rate of gases entering or exiting the control device, as determined according to §63.827(d)(1)(ii), dry standard cubic meters (dscm)/h.

C_c= Concentration of organic compounds as carbon, ppmv.

12.0 = Molecular weight of carbon.

0.0416 = Conversion factor for molar volume, kg-moles per cubic meter (mol/m3) (@ 293 Kelvin (K) and 760 millimeters of mercury (mmHg)).

(ix) Emission control device efficiency shall be determined using Equation 21:

$$E = \frac{M_A - M_B}{M_A} \qquad Eq\ 21$$

(2) The owner or operator shall record such process information as may be necessary to determine the conditions of the performance test. Operations during periods of start-up, shutdown, and malfunction shall not constitute representative conditions for the purpose of a performance test.

(3) For the purpose of determining the value of the oxidizer operating parameter that will demonstrate continuing compliance, the time-weighted average of the values recorded during the performance test shall be computed. For an oxidizer other than catalytic oxidizer, the owner or operator shall establish as the operating parameter the minimum combustion temperature. For a catalytic oxidizer, the owner or operator shall establish as the operating parameter the minimum gas temperature upstream of the catalyst bed. These minimum temperatures are the operating parameter values that demonstrate continuing compliance with the requirements of §§63.824–63.825.

(e) A performance test to determine the capture efficiency of each capture system venting organic emissions to a control device for the purpose of meeting the requirements of §63.824(b)(1)(ii), §63.824(b)(2), §63.825(c)(2), §63.825(d)(1)–(2), §63.825(f)(2)–(4), or §63.825(h)(2)–(3) shall be conducted by the owner or operator in accordance with the following:

(1) You may assume your capture efficiency equals 100 percent if your capture system is a permanent total enclosure (PTE). You must confirm that your capture system is a PTE by demonstrating that it meets the requirements of section 6 of Method 204 of 40 CFR part 51, appendix M, and that all exhaust gases from the enclosure are delivered to a control device.

(2) You may determine capture efficiency according to the protocols for testing with temporary total enclosures that are specified in Methods 204 and 204A through F of 40

CFR part 51, appendix M. You may exclude never controlled work stations from such capture efficiency determinations.

(f) As an alternative to the procedures specified in §63.827(e) an owner or operator required to conduct a capture efficiency test may use any capture efficiency protocol and test methods that satisfy the criteria of either the Data Quality Objective (DQO) or the Lower Confidence Limit (LCL) approach as described in Appendix A of this subpart. The owner or operator may exclude never-controlled work stations from such capture efficiency determinations.

[61 FR 27140, May 30, 1996, as amended at 71 FR 29802, May 24, 2006; 76 FR 22598, Apr. 21, 2011]

§ 63.828 Monitoring requirements.

(a) Following the date on which the initial performance test of a control device is completed, to demonstrate continuing compliance with the standard, the owner or operator shall monitor and inspect each control device required to comply with §§63.824–63.825 to ensure proper operation and maintenance by implementing the applicable requirements in paragraph (a)(1) through (a)(5) of this section.

(1) Owners or operators of product and packaging rotogravure or wide-web flexographic presses with intermittently-controllable work stations shall follow one of the procedures in paragraphs (a)(1)(i) through (a)(1)(iv) of this section for each dryer associated with such a work station:

(i) Install, calibrate, maintain, and operate according to the manufacturer's specifications a flow control position indicator that provides a record indicating whether the exhaust stream from the dryer was directed to the control device or was diverted from the control device. The time and flow control position must be recorded at least once per hour, as well as every time the flow direction is changed. The flow control position indicator shall be installed at the entrance to any bypass line that could divert the exhaust stream away from the control device to the atmosphere.

(ii) Secure any bypass line valve in the closed position with a car-seal or a lock-and-key type configuration; a visual inspection of the seal or closure mechanism shall be performed at least once every month to ensure that the valve or damper is maintained in the closed position and the exhaust stream is not diverted through the bypass line.

(iii) Ensure that any bypass line valve or damper is in the closed position through continuous monitoring of valve position. The monitoring system shall be inspected at least once every month to ensure that it is functioning properly.

(iv) Use an automatic shutdown system in which the press is stopped when flow is diverted away from the control device to any bypass line. The automatic system shall be inspected at least once every month to ensure that it is functioning properly.

(2) Compliance monitoring shall be subject to the provisions of paragraphs (a)(2)(i) and (a)(2)(ii) of this section, as applicable.

(i) All continuous emission monitors shall comply with performance specifications (PS) 8 or 9 of 40 CFR part 60, appendix B, as appropriate. The requirements of appendix F of 40 CFR part 60 shall also be followed. In conducting the quarterly audits required by appendix F, owners or operators must challenge the monitors with compounds representative of the gaseous emission stream being controlled.

(ii) All temperature monitoring equipment shall be installed, calibrated, maintained, and operated according to manufacturers specifications. The calibration of the chart recorder, data logger, or temperature indicator shall be verified every three months; or the chart recorder, data logger, or temperature indicator shall be replaced. The replacement shall be done either if the owner or operator chooses not to perform the calibration, or if the equipment cannot be calibrated properly.

(3) An owner or operator complying with §§63.824–63.825 through continuous emission monitoring of a control device shall install, calibrate, operate, and maintain continuous emission monitors to measure total organic volatile matter concentration and volumetric gas flow rate in accordance with §63.824(b)(1)(ii), §63.825(b)(2)(ii), §63.825(c)(2), or §63.825(d)(2), as applicable.

(4) An owner or operator complying with the requirements of §§63.824–63.825 through the use of an oxidizer and demonstrating continuous compliance through monitoring of an oxidizer operating parameter shall:

(i) For an oxidizer other than a catalytic oxidizer, install, calibrate, operate, and maintain a temperature monitoring device equipped with a continuous recorder. The device shall have an accuracy of ±1 percent of the temperature being monitored in °C or ±1 °C, whichever is greater. The thermocouple or temperature sensor shall be installed in the combustion chamber at a location in the combustion zone.

(ii) For a catalytic oxidizer, install, calibrate, operate, and maintain a temperature monitoring device equipped with a continuous recorder. The device shall be capable of monitoring temperature with an accuracy of ±1 percent of the temperature being monitored in °C or ±1 °C, whichever is greater. The thermocouple or temperature sensor shall be installed in the vent stream at the nearest feasible point to the catalyst bed inlet.

(5) An owner or operator complying with the requirements of §§63.824–63.825 through the use of a control device and demonstrating continuous compliance by monitoring an operating parameter to ensure that the capture efficiency measured during the initial compliance test is maintained, shall:

(i) Submit to the Administrator with the compliance status report required by §63.9(h) of the General Provisions, a plan that

(A) Identifies the operating parameter to be monitored to ensure that the capture efficiency measured during the initial compliance test is maintained,

(B) Discusses why this parameter is appropriate for demonstrating ongoing compliance, and

(C) Identifies the specific monitoring procedures;

(ii) Set the operating parameter value, or range of values, that demonstrate compliance with §§63.824–63.825, and

(iii) Conduct monitoring in accordance with the plan submitted to the Administrator unless comments received from the Administrator require an alternate monitoring scheme.

(b) Any excursion from the required operating parameters which are monitored in accordance with paragraphs (a)(4) and (a)(5) of this section, unless otherwise excused, shall be considered a violation of the emission standard.

[61 FR 27140, May 30, 1996, as amended at 71 FR 29804, May 24, 2006]

§ 63.829 Recordkeeping requirements.

(a) The recordkeeping provisions of 40 CFR part 63 subpart A of this part that apply and those that do not apply to owners and operators of affected sources subject to this subpart are listed in Table 1 of this subpart.

(b) Each owner or operator of an affected source subject to this subpart shall maintain the records specified in paragraphs (b)(1) through (b)(3) of this section on a monthly basis in accordance with the requirements of §63.10(b)(1) of this part:

(1) Records specified in §63.10(b)(2) of this part, of all measurements needed to demonstrate compliance with this standard, such as continuous emission monitor data, control device and capture system operating parameter data, material usage, HAP usage, volatile matter usage, and solids usage that support data that the source is required to report.

(2) Records specified in §63.10(b)(3) of this part for each applicability determination performed by the owner or operator in accordance with the requirements of §63.820(a) of this subpart, and

(3) Records specified in §63.10(c) of this part for each continuous monitoring system operated by the owner or operator in accordance with the requirements of §63.828(a) of this subpart.

(c) Each owner or operator of an affected source subject to this subpart shall maintain records of all liquid-liquid material balances performed in accordance with the requirements of §§63.824–63.825 of this subpart. The records shall be maintained in accordance with the requirements of §63.10(b) of this part.

(d) The owner or operator of each facility which commits to the criteria of §63.820(a)(2) shall maintain records of all required measurements and calculations needed to demonstrate compliance with these criteria, including the mass of all HAP containing materials used and the mass fraction of HAP present in each HAP containing material used, on a monthly basis.

(e) The owner or operator of each facility which meets the limits and criteria of §63.821(b)(1) shall maintain records as required in paragraph (e)(1) of this section. The owner or operator of each facility which meets the limits and criteria of §63.821(b)(2) shall maintain records as required in paragraph (e)(2) of this section. Owners or operators shall maintain these records for five years, and upon request, submit them to the Administrator.

(1) For each facility which meets the criteria of §63.821(b)(1), the owner or operator shall maintain records of the total mass of each material applied on product and packaging rotogravure or wide-web flexographic printing presses during each month.

(2) For each facility which meets the criteria of §63.821(b)(2), the owner or operator shall maintain records of the total mass and organic HAP content of each material applied on product and packaging rotogravure or wide-web flexographic printing presses during each month.

(f) The owner or operator choosing to exclude from an affected source, a product and packaging rotogravure or wide-web flexographic press which meets the limits and criteria of §63.821(a)(2)(ii)(A) shall maintain the records specified in paragraphs (f)(1) and (f)(2) of this section for five years and submit them to the Administrator upon request:

(1) The total mass of each material applied each month on the press, including all inboard and outboard stations, and

(2) The total mass of each material applied each month on the press by product and packaging rotogravure or wide-web flexographic printing operations.

(g) Each owner or operator of an affected source subject to this subpart shall maintain records of the occurrence and duration of each malfunction of operation (*i.e.,* process equipment), air pollution control equipment, or monitoring equipment.

(h) Each owner or operator of an affected source subject to this subpart shall maintain records of actions taken during periods of malfunction to minimize emissions in accordance with §63.823(b), including corrective actions to restore malfunctioning

process and air pollution control and monitoring equipment to its normal or usual manner of operation.

[61 FR 27140, May 30, 1996, as amended at 71 FR 29804, May 24, 2006; 76 FR 22598, Apr. 21, 2011]

§ 63.830 Reporting requirements.

(a) The reporting provisions of 40 CFR part 63 subpart A of this part that apply and those that do not apply to owners and operators of affected sources subject to this subpart are listed in Table 1 of this subpart.

(b) Each owner or operator of an affected source subject to this subpart shall submit the reports specified in paragraphs (b)(1) through (b)(6) of this section to the Administrator:

(1) An initial notification required in §63.9(b).

(i) Initial notifications for existing sources shall be submitted no later than one year before the compliance date specified in §63.826(a).

(ii) Initial notifications for new and reconstructed sources shall be submitted as required by §63.9(b).

(iii) For the purpose of this subpart, a Title V or part 70 permit application may be used in lieu of the initial notification required under §63.9(b), provided the same information is contained in the permit application as required by §63.9(b), and the State to which the permit application has been submitted has an approved operating permit program under part 70 of this chapter and has received delegation of authority from the EPA.

(iv) Permit applications shall be submitted by the same due dates as those specified for the initial notifications.

(2) A Notification of Performance Tests specified in §§63.7 and 63.9(e) of this part. This notification, and the site-specific test plan required under §63.7(c)(2) shall identify the operating parameter to be monitored to ensure that the capture efficiency measured during the performance test is maintained. The operating parameter identified in the site-specific test plan shall be considered to be approved unless explicitly disapproved, or unless comments received from the Administrator require monitoring of an alternate parameter.

(3) A Notification of Compliance Status specified in §63.9(h) of this part.

(4) Performance test reports specified in §63.10(d)(2) of this part.

(5) [Reserved]

(6) A summary report specified in §63.10(e)(3) of this part shall be submitted on a semi-annual basis (i.e., once every 6-month period). These summary reports are required even if the affected source does not have any control devices or does not take the performance of any control devices into account in demonstrating compliance with the emission limitations in §63.824 or §63.825. In addition to a report of operating parameter exceedances as required by §63.10(e)(3)(i), the summary report shall include, as applicable:

(i) Exceedances of the standards in §§63.824–63.825.

(ii) Exceedances of either of the criteria of §63.820(a)(2).

(iii) Exceedances of the criterion of §63.821(b)(1) and the criterion of §63.821(b)(2) in the same month.

(iv) Exceedances of the criterion of §63.821(a)(2)(ii)(A).

(v) The number, duration, and a brief description for each type of malfunction which occurred during the reporting period and which caused or may have caused any applicable emission limitation to be exceeded. The report must also include a description of actions taken by an owner or operator during a malfunction of an affected source to minimize emissions in accordance with §63.823(b), including actions taken to correct a malfunction.

(c)(1) As of January 1, 2012, and within 60 days after the date of completing each performance test, as defined in §63.2 and as required in this subpart, you must submit performance test data, except opacity data, electronically to EPA's Central Data Exchange by using the ERT (see *http://www.epa.gov/ttn/chief/ert/ert tool.html/*) or other compatible electronic spreadsheet. Only data collected using test methods compatible with ERT are subject to this requirement to be submitted electronically into EPA's WebFIRE database.

(2) All reports required by this subpart not subject to the requirements in paragraph (c)(1) of this section must be sent to the Administrator at the appropriate address listed in §63.13. If acceptable to both the Administrator and the owner or operator of a source, these reports may be submitted on electronic media. The Administrator retains the right to require submittal of reports subject to paragraph (c)(1) of this section in paper format.

[61 FR 27140, May 30, 1996, as amended at 71 FR 29804, May 24, 2006; 76 FR 22598, Apr. 21, 2011]

§ 63.831 Implementation and enforcement.

(a) This subpart can be implemented and enforced by the U.S. EPA, or a delegated authority such as the applicable State, local, or Tribal agency. If the U.S. EPA Administrator has delegated authority to a State, local, or Tribal agency, then that agency,

in addition to the U.S. EPA, has the authority to implement and enforce this subpart. Contact the applicable U.S. EPA Regional Office to find out if this subpart is delegated to a State, local, or Tribal agency.

(b) In delegating implementation and enforcement authority of this subpart to a State, local, or Tribal agency under subpart E of this part, the authorities contained in paragraph (c) of this section are retained by the Administrator of U.S. EPA and cannot be transferred to the State, local, or Tribal agency.

(c) The authorities that cannot be delegated to State, local, or Tribal agencies are as specified in paragraphs (c)(1) through (4) of this section.

(1) Approval of alternatives to the requirements in §§63.820 through 63.821 and 63.823 through 63.826.

(2) Approval of alternatives to the test method for organic HAP content determination in §63.827(b) and alternatives to the test method for volatile matter in §63.827(c), and major alternatives to other test methods under §63.7(e)(2)(ii) and (f), as defined in §63.90, and as required in this subpart.

(3) Approval of major alternatives to monitoring under §63.8(f), as defined in §63.90, and as required in this subpart.

(4) Approval of major alternatives to recordkeeping and reporting under §63.10(f), as defined in §63.90, and as required in this subpart.

[68 FR 37354, June 23, 2003]

§§ 63.832-63.839 [Reserved]

Table 1 to Subpart KK of Part 63—Applicability of General Provisions to Subpart KK

General provisions reference	Applicable to subpart KK	Comment
§63.1(a)(1)–(a)(4)	Yes.	
§63.1(a)(5)	No	Section reserved.
§63.1(a)(6)–(a)(8)	No.	
§63.1(a)(9)	No	Section reserved.
§63.1(a)(10)–(a)(14)	Yes.	
§63.1(b)(1)	No	Subpart KK specifies applicability.
§63.1(b)(2)–(b)(3)	Yes.	
§63.1(c)(1)	Yes.	
§63.1(c)(2)	No	Area sources are not subject to subpart KK.
§63.1(c)(3)	No	Section reserved.
§63.1(c)(4)	Yes.	

§63.1(c)(5)	No.	
§63.1(d)	No	Section reserved.
§63.1(e)	Yes.	
§63.2	Yes	Additional definitions in subpart KK.
§63.3(a)–(c)	Yes.	
§63.4(a)(1)–(a)(3)	Yes.	
§63.4(a)(4)	No	Section reserved.
§63.4(a)(5)	Yes.	
§63.4(b)–(c)	Yes.	
§63.5(a)(1)–(a)(2)	Yes.	
§63.5(b)(1)	Yes.	
§63.5(b)(2)	No	Section reserved.
§63.5(b)(3)–(b)(6)	Yes.	
§63.5(c)	No	Section reserved.
§63.5(d)	Yes.	
§63.5(e)	Yes.	
§63.5(f)	Yes.	
§63.6(a)	Yes.	
§63.6(b)(1)–(b)(5)	Yes.	
§63.6(b)(6)	No	Section reserved.
§63.6(b)(7)	Yes.	
§63.6(c)(1)–(c)(2)	Yes.	
§63.6(c)(3)–(c)(4)	No	Sections reserved.
§63.6(c)(5)	Yes.	
§63.6(d)	No	Section reserved.
§63.6(e)(1)(i)	No	See 63.823(b) for general duty requirement. Any cross-reference to 63.6(e)(1)(i) in any other general provision incorporated by reference shall be treated as a cross-reference to 63.823(b).
§63.6(e)(1)(ii)	No	
§63.6(e)(1)(iii)	Yes.	
§63.6(e)(2)	No	Section reserved.
§63.6(e)(3)	No	
§63.6(f)(1)	No	
§63.6(f)(2)–(f)(3)	Yes.	
§63.6(g)	Yes.	
§63.6(h)	No	Subpart KK does not require COMS.

§63.6(i)(1)–(i)(14)	Yes.	
§63.6(i)(15)	No	Section reserved.
§63.6(i)(16)	Yes.	
§63.6(j)	Yes.	
§63.7(a)–(d)	Yes.	
§63.7(e)(1)	No	See 63.827 introductory text. Any cross-reference to 63.7(e)(1) in any other general provision incorporated by reference shall be treated as a cross-reference to 63.827 introductory text.
§63.7(e)(2)–(e)(4)	Yes.	
§63.8(a)(1)–(a)(2)	Yes.	
§63.8(a)(3)	No	Section reserved.
§63.8(a)(4)	No	Subpart KK specifies the use of solvent recovery devices or oxidizers.
§63.8(b)	Yes.	
§63.8(c)(1)–(3)	Yes.	
§63.8(c)(4)	No	Subpart KK specifies CMS sampling requirements.
§63.8(c)(5)	No	Subpart KK does not require COMS.
§63.8(c)(6)–(c)(8)	Yes	Provisions for COMS are not applicable.
§63.8(d)(1)–(2)	Yes.	
§63.8(d)(3)	Yes, except for last sentence.	
§63.8(e)–(f)	Yes.	
§63.8(g)	No	Subpart KK specifies CMS data reduction requirements.
§63.9(a)	Yes.	
§63.9(b)(1)	Yes.	
§63.9(b)(2)	Yes	Initial notification submission date extended.
§63.9(b)(3)–(b)(5)	Yes.	
§63.9(c)–(e)	Yes.	
§63.9(f)	No	Subpart KK does not require opacity and visible emissions observations.
§63.9(g)	Yes	Provisions for COMS are not applicable.
§63.9(h)(1)–(h)(3)	Yes.	
§63.9(h)(4)	No	Section reserved.
§63.9(h)(5)–(h)(6)	Yes.	
§63.9(i)	Yes.	
§63.9(j)	Yes.	
§63.10(a)	Yes.	
§63.10(b)(1)	Yes.	
§63.10(b)(2)(i)	No.	

§63.10(b)(2)(ii)	No	See 63.829(g) for recordkeeping of occurrence and duration of malfunctions. See 63.829(h) for recordkeeping of actions taken during malfunction. Any cross-reference to 63.10(b)(2)(ii) in any other general provision incorporated by reference shall be treated as a cross-reference to 63.829(g).
§63.10(b)(2)(iii)	Yes.	
§63.10(b)(2)(iv)–(b)(2)(v)	No.	
§63.10(b)(2)(vi)–(b)(2)(xiv)	Yes.	
§63.10(b)(3)	Yes.	
§63.10(c)(1)	Yes.	
§63.10(c)(2)–(c)(4)	No	Sections reserved.
§63.10(c)(5)–(c)(8)	Yes.	
§63.10(c)(9)	No	Section reserved.
§63.10(c)(10)	No	See 63.830(b)(6)(v) for reporting malfunctions. Any cross-reference to 63.10(c)(10) in any other general provision incorporated by reference shall be treated as a cross-reference to 63.830(b)(6)(v).
§63.10(c)(11)	No	See 63.830(b)(6)(v) for reporting malfunctions. Any cross-reference to 63.10(c)(11) in any other general provision incorporated by reference shall be treated as a cross-reference to 63.830(b)(6)(v).
§63.10(c)(12)–(c)(14)	Yes.	
§63.10(c)(15)	No.	
§63.10(d)(1)–(d)(2)	Yes.	
§63.10(d)(3)	No	Subpart KK does not require opacity and visible emissions observations.
§63.10(d)(4)	Yes.	
§63.10(d)(5)	No.	
§63.10(e)	Yes	Provisions for COMS are not applicable.
§63.10(f)	Yes.	
§63.11	No	Subpart KK specifies the use of solvent recovery devices or oxidizers.
§63.12	Yes.	
§63.13	Yes.	
§63.14	Yes.	
§63.15	Yes.	

[61 FR 27140, May 30, 1996, as amended at 76 FR 22598, Apr. 21, 2011]

Appendix A to Subpart KK of Part 63—Data Quality Objective and Lower Confidence Limit Approaches for Alternative Capture Efficiency Protocols and Test Methods

1. Introduction

1.1 Alternative capture efficiency (CE) protocols and test methods that satisfy the criteria of either the data quality objective (DQO) approach or the lower confidence limit (LCL) approach are acceptable under §63.827(f). The general criteria for alternative CE protocols and test methods to qualify under either the DQO or LCL approach are described in section 2. The DQO approach and criteria specific to the DQO approach are described in section 3. The LCL approach and criteria specific to the LCL approach are described in section 4. The recommended reporting for alternative CE protocols and test methods are presented in section 5. The recommended recordkeeping for alternative CE protocols and test methods are presented in section 6.

1.2 Although the Procedures L, G.1, G.2, F.1, and F.2 in §52.741 of part 52 were developed for TTE and BE testing, the same procedures can also be used in an alternative CE protocol. For example, a traditional liquid/gas mass balance CE protocol could employ Procedure L to measure liquid VOC input and Procedure G.1 to measure captured VOC.

2. General Criteria for DQO and LCL Approaches

2.1 The following general criteria must be met for an alternative capture efficiency protocol and test methods to qualify under the DQO or LCL approach.

2.2 An alternative CE protocol must consist of at least three valid test runs. Each test run must be at least 20 minutes long. No test run can be longer than 24 hours.

2.3 All test runs must be separate and independent. For example, liquid VOC input and output must be determined independently for each run. The final liquid VOC sample from one run cannot be the initial sample for another run. In addition, liquid input for an entire day cannot be apportioned among test runs based on production.

2.4 Composite liquid samples cannot be used to obtain an "average composition" for a test run. For example, separate initial and final coating samples must be taken and analyzed for each run; initial and final samples cannot be combined prior to analysis to derive an "average composition" for the test run.

2.5 All individual test runs that result in a CE of greater than 105 percent are invalid and must be discarded.

2.6 If the source can demonstrate to the regulatory agency that a test run should not be considered due to an identified testing or analysis error such as spillage of part of the sample during shipping or an upset or improper operating conditions that is not considered part of normal operation then the test result for that individual test run may be discarded. This limited exception allows sources to discard as "outliers" certain individual test runs without replacing them with a valid test run as long as the facility has at least three valid test runs to use when calculating its DQO or LCL. This exception is limited solely to test runs involving the types of errors identified above.

2.7 All valid test runs that are conducted must be included in the average CE determination. The individual test run CE results and average CE results cannot be truncated (i.e., 105 percent cannot be reported as 100+ percent) for purposes of meeting general or specific criteria for either the DQO or the LCL. If the DQO is satisfied and the average CE is greater than 100, then 100 percent CE must be considered the result of the test.

2.8 Alternative test methods for measuring VOC concentration must include a three-point calibration of the gas analysis instrument in the expected concentration range.

3. Data Quality Objective Approach

3.1 The purpose of the DQO is to allow sources to use alternative CE protocols and test methods while ensuring reasonable precision consistent with pertinent requirements of the Clean Air Act. In addition to the general criteria described in section 2, the specific DQO criterion is that the width of the two-sided 95 percent confidence interval of the mean measured value must be less than or equal to 10 percent of the mean measured value (see Figure 1). This ensures that 95 percent of the time, when the DQO is met, the actual CE value will be ±5 percent of the mean measured value (assuming that the test protocol is unbiased).

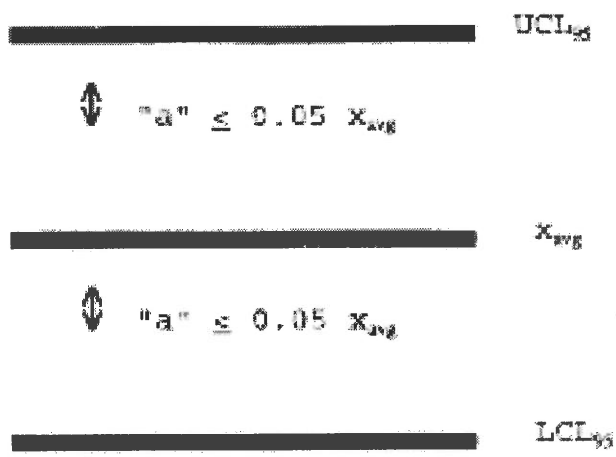

View or download PDF

3.2 The DQO calculation is made as follows using Equations 1 and 2:

$$P = \left[\frac{a}{x_{avg}}\right]100 \qquad \text{Eq. 1}$$

$$a = \frac{t_{0.975}s}{\sqrt{n}} \qquad \text{Eq. 2}$$

Where:

a = Distance from the average measured CE value to the endpoints of the 95-percent (two-sided) confidence interval for the measured value.

n = Number of valid test runs.

P = DQO indicator statistic, distance from the average measured CE value to the endpoints of the 95-percent (two-sided) confidence interval, expressed as a percent of the average measured CE value.

s = Sample standard deviation.

$t_{0.975}$= t-value at the 95-percent (two-sided) confidence level (see Table A–1).

x_{avg}= Average measured CE value (calculated from all valid test runs).

x_i= The CE value calculated from the ith test run.

Table A–1—t-Values

Number of valid test runs, n	$t_{0.975}$	$t_{0.90}$
1 or 2	N/A	N/A
3	4.303	1.886
4	3.182	1.638
5	2.776	1.533
6	2.571	1.476
7	2.447	1.440
8	2.365	1.415
9	2.306	1.397
10	2.262	1.383
11	2.228	1.372
12	2.201	1.363
13	2.179	1.356
14	2.160	1.350
15	2.145	1.345
16	2.131	1.341
17	2.120	1.337
18	2.110	1.333
19	2.101	1.330

20	2.093	1.328
21	2.086	1.325

3.3 The sample standard deviation and average CE value are calculated using Equations 3 and 4 as follows:

$$s = \left[\frac{\sum_{i=1}^{n} \left(x_i - x_{avg} \right)^2}{n-1} \right]^{0.5} \qquad Eq\ 3$$

$$x_{avg} = \frac{\sum_{i=1}^{n} x_i}{n} \qquad Eq\ 4$$

3.4 The DQO criteria are achieved when all of the general criteria in section 2 are achieved and P ≤5 percent (i.e., the specific DQO criterion is achieved). In order to meet this objective, facilities may have to conduct more than three test runs. Examples of calculating P, given a finite number of test runs, are shown below. (For purposes of this example it is assumed that all of the general criteria are met.)

3.5 Facility A conducted a CE test using a traditional liquid/gas mass balance and submitted the following results and the calculations shown in Equations 5 and 6:

Run	CE
1	96.1
2	105.0
3	101.2

Therefore:

n=3

$t_{0.975}$=4.30

x_{avg}=100.8

s=4.51

$$a = \frac{(4.30)(4.51)}{\sqrt{n}} = 11.20 \qquad Eq\ 5 \qquad P = \frac{11.2}{100.8} 100 = 11.11 \qquad Eq\ 6$$

3.6 Since the facility did not meet the specific DQO criterion, they ran three more test runs.

Run	CE
4	93.2
5	96.2
6	87.6

3.7 The calculations for Runs 1–6 are made as follows using Equations 7 and 8:

n=6

$t_{0.975}$=2.57

x_{avg}=96.6

s=6.11

$$a = \frac{(2.57)(6.11)}{\sqrt{6}} = 6.41 \qquad Eq\ 7 \quad P = \frac{6.41}{96.6}100 = 6.64 \qquad Eq\ 8$$

3.8 The facility still did not meet the specific DQO criterion. They ran three more test runs with the following results:

Run	CE
7	92.9
8	98.3
9	91.0

3.9 The calculations for Runs 1–9 are made as follows using Equations 9 and 10:

n=9

$t_{0.975}$=2.31

x_{avg}=95.7

s=5.33

$$a = \frac{(2.31)(5.33)}{\sqrt{9}} = 4.10 \qquad Eq\ 9 \quad P = \frac{4.10}{95.7}100 = 4.28 \qquad Eq\ 10$$

3.10 Based on these results, the specific DQO criterion is satisfied. Since all of the general criteria were also satisfied, the average CE from the nine test runs can be used to determine compliance.

4. Lower Confidence Limit Approach

4.1 The purpose of the LCL approach is to provide sources, that may be performing much better than their applicable regulatory requirement, a screening option by which they can demonstrate compliance. The approach uses less precise methods and avoids additional test runs which might otherwise be needed to meet the specific DQO criterion while still being assured of correctly demonstrating compliance. It is designed to reduce "false positive" or so called "Type II errors" which may erroneously indicate compliance where more variable test methods are employed. Because it encourages CE performance greater than that required in exchange for reduced compliance demonstration burden, the sources that successfully use the LCL approach could produce emission reductions beyond allowable emissions. Thus, it could provide additional benefits to the environment as well.

4.2 The LCL approach compares the 80 percent (two-sided) LCL for the mean measured CE value to the applicable CE regulatory requirement. In addition to the general criteria described in section 2, the specific LCL criteria are that either the LCL be greater than or equal to the applicable CE regulatory requirement or that the specific DQO criterion is met. A more detailed description of the LCL approach follows:

4.3 A source conducts an initial series of at least three runs. The owner or operator may choose to conduct additional test runs during the initial test if desired.

4.4 If all of the general criteria are met and the specific DQO criterion is met, then the average CE value is used to determine compliance.

4.5 If the data meet all of the general criteria, but do not meet the specific DQO criterion; and the average CE, using all valid test runs, is above 100 percent then the test sequence cannot be used to calculate the LCL. At this point the facility has the option of (a) conducting more test runs in hopes of meeting the DQO or of bringing the average CE for all test runs below 100 percent so the LCL can be used or (b) discarding all previous test data and retesting.

4.6 The purpose of the requirement in Section 4.5 is to protect against protocols and test methods which may be inherently biased high. This is important because it is impossible to have an actual CE greater than 100 percent and the LCL approach only looks at the lower end variability of the test results. This is different from the DQO which allows average CE values up to 105 percent because the DQO sets both upper and lower limits on test variability.

4.7 If at any point during testing the results meet the DQO, the average CE can be used for demonstrating compliance with the applicable regulatory requirement. Similarly, if the average CE is below 100 percent then the LCL can be used for demonstrating compliance with the applicable regulatory requirement without regard to the DQO.

4.8 The LCL is calculated at an 80 percent (two-sided) confidence level as follows using Equation 11:

$$LC_1 = x_{avg} - \frac{t_{0.90}\, s}{\sqrt{n}} \qquad \text{Eq. 11}$$

Where:

LC_1= LCL at an 80-percent (two-sided) confidence level.

n = Number of valid test runs.

s = Sample standard deviation.

$t_{0.90}$= t-value at the 80-percent (two-sided) confidence level (see Table A–1).

x_{avg}= Average measured CE value (calculated from all valid test runs).

4.9 The resulting $LC_1$is compared to the applicable CE regulatory requirement. If LC_1exceeds (i.e., is higher than) the applicable regulatory requirement, then a facility is in initial compliance. However, if the $LC_1$is below the CE requirement, then the facility must conduct additional test runs. After this point the test results will be evaluated not only looking at the LCL, but also the DQO of ±5 percent of the mean at a 95 percent confidence level. If the test results with the additional test runs meet the DQO before the LCL exceeds the applicable CE regulatory requirement, then the average CE value will be compared to the applicable CE regulatory requirement for determination of compliance.

4.10 If there is no specific CE requirement in the applicable regulation, then the applicable CE regulatory requirement is determined based on the applicable regulation and an acceptable destruction efficiency test. If the applicable regulation requires daily compliance and the latest CE compliance demonstration was made using the LCL approach, then the calculated LC_1will be the highest CE value which a facility is allowed to claim until another CE demonstration test is conducted. This last requirement is necessary to assure both sufficiently reliable test results in all circumstances and the potential environmental benefits referenced above.

4.11 An example of calculating the LCL is shown below. Facility B's applicable regulatory requirement is 85 percent CE. Facility B conducted a CE test using a traditional liquid/gas mass balance and submitted the following results and the calculation shown in Equation 12:

Run	CE

1	94.2
2	97.6
3	90.5

Therefore:

n=3

$t_{0.90}$=1.886

x_{avg}=94.1

s=3.55

$$LC_1 = 94.1 - \frac{(1.886)(3.55)}{\sqrt{3}} = 90.23 \qquad Eq\ 12$$

4.12 Since the $LC_1$of 90.23 percent is above the applicable regulatory requirement of 85 percent then the facility is in compliance. The facility must continue to accept the $LC_1$of 90.23 percent as its CE value until a new series of valid tests is conducted. (The data generated by Facility B do not meet the specific DQO criterion.)

5. Recommended Reporting for Alternative CE Protocols

5.1 If a facility chooses to use alternative CE protocols and test methods that satisfy either the DQO or LCL and the additional criteria in section 4., the following information should be submitted with each test report to the appropriate regulatory agency:

1. A copy of all alternative test methods, including any changes to the EPA reference methods, QA/QC procedures and calibration procedures.

2. A table with information on each liquid sample, including the sample identification, where and when the sample was taken, and the VOC content of the sample;

3. The coating usage for each test run (for protocols in which the liquid VOC input is to be determined);

4. The quantity of captured VOC measured for each test run;

5. The CE calculations and results for each test run;

6. The DQO or LCL calculations and results; and

7. The QA/QC results, including information on calibrations (e.g., how often the instruments were calibrated, the calibration results, and information on calibration gases, if applicable).

6. Recommended Recordkeeping for Alternative CE Protocols.

6.1 A record should be kept at the facility of all raw data recorded during the test in a suitable form for submittal to the appropriate regulatory authority upon request.

[61 FR 27140, May 30, 1996, as amended at 71 FR 29804, May 24, 2006]

Instructions for Form FRA

Item 4 & 5. It is important that facilities review the most recent federal regulations when submitting their permit application to DEQ. Current federal regulations can be found at the following Web site: http://ecfr.gpoaccess.gov/cgi/t/text/text-idx?&c=ecfr&tpl=/ecfrbrowse/Title40/40tab_02.tpl.

Item 6. For each applicable subpart identified under items 4-5 conduct a complete regulatory analysis. The facility must follow the procedure given below or obtain permission from DEQ to provide the necessary information using an alternative procedure:

1. Retrieve a TEXT or PDF copy of the applicable federal regulation subpart(s) online at http://www.gpoaccess.gov/cfr/retrieve.html
2. Copy and paste the regulation(s) into your DEQ air permit application.
3. Highlight or underline sections in the regulation(s) that are applicable to the source(s).
4. Under each section of the subpart, explain why the source is subject to the section, or why the source is not subject to the section. When providing the explanation use a different font than the regulation (i.e. ***bold, italic***) so that it is easy for the reader to determine the text that the applicant has provided. An example NSPS regulatory analysis is attached. The applicant must provide all necessary information needed to determine applicability. If information is lacking or the analysis is incomplete the application will be determined incomplete.

   EPA provides a web site dedicated to NSPS/NESHAP applicability determinations that may be useful to applicants. Follow this link to the applicability determination index Clean Air Act Applicability Determination Index - Compliance Monitoring - EPA. Another useful source of information is the preamble to the regulation which is published in the Federal Register on the date the regulation was promulgated. Federal Registers may be found online at Federal Register: Main Page. The date the regulation was published in the Federal Register is included in the footnotes of the regulation.
5. DEQ will assist in identifying the applicable requirements that the applicant must include in the application but will not perform the required technical or regulatory analysis on the applicant's behalf. Applicants should contact the Air Quality Permit Hotline (1-877-573-7648) to discuss NSPS/NESHAP regulatory analysis requirements or to schedule a meeting.
6. It also benefits facilities to document a non-applicability determination on federal air regulations which appear to apply to the facility but actually do not. A non-applicability determination will avoid future confusion and expedite the air permit application review. If you conduct an applicability determination and find that your activity is not NSPS or NESHAP affected facility an analysis should be submitted using the methods described above.
7. **It is not sufficient to simply provide a copy of the NSPS or NESHAP. The applicant must address each section of the regulation as described above and as shown in the example that is provided.**

EXAMPLE OF A NSPS REGULATORY ANALYSIS

[Title 40, Volume 6]
[Revised as of July 1, 2008]
From the U.S. Government Printing Office via GPO Access
[CITE: 40CFR60]

TITLE 40--PROTECTION OF ENVIRONMENT

CHAPTER I--ENVIRONMENTAL PROTECTION AGENCY (CONTINUED)

PART 60_STANDARDS OF PERFORMANCE FOR NEW STATIONARY SOURCES--
Table of Contents

Subpart H_Standards of Performance for Sulfuric Acid Plants

Sec.60.80 Applicability and designation of affected facility.

(a) The provisions of this subpart are applicable to each sulfuric acid production unit, which is the affected facility.
(b) Any facility under paragraph (a) of this section that commences construction or modification after August 17, 1971, is subject to the requirements of this subpart.

ACME Chemicals, Inc. is proposing to construct after August 17, 1971 a sulfuric acid plant which burns elemental sulfur as defined by 40 CFR 60.81(a). ACME is therefore affected by this subpart.

(Be sure to use the terms of the regulation to describe applicability; usually applicability is determined based on a specific date, definition of an affected facility, and rated input capacity. All of the applicability criteria must be addressed by the applicant.)

Note – if a determination of non-applicability is being submitted it is not necessary to address the remaining non-applicable regulatory sections. Be sure to provide the applicability determination in terms of the regulation (i.e. construction/modification date, rated input capacity, definition of affected facility).

Sec.60.81 Definitions.

As used in this subpart, all terms not defined herein shall have the meaning given them in the Act and in subpart A of this part.
(a) Sulfuric acid production unit means any facility producing sulfuric acid by the contact process by burning elemental sulfur, alkylation acid, hydrogen sulfide, organic sulfides and mercaptans, or acid sludge, but does not include facilities where conversion to sulfuric acid is utilized primarily as a means of preventing emissions to the atmosphere of sulfur dioxide or other sulfur compounds.
(b) Acid mist means sulfuric acid mist, as measured by Method 8 of appendix A to this part or an equivalent or alternative method.

ACME Chemicals, Inc. has read and understands these definitions and used them in providing this regulatory analysis.

Sec.60.82 Standard for sulfur dioxide.

(a) On and after the date on which the performance test required to be conducted by Sec.60.8 is completed, no owner or operator subject to the provisions of this subpart shall cause to be discharged into the atmosphere from any affected facility any gases which contain sulfur dioxide in excess of 2 kg per metric ton of acid produced (4 lb per ton), the production being expressed as 100 percent H2/SO4/.

ACME Chemicals, Inc. is subject to this standard and has provided a documented emission inventory (or manufacturer guarantee) which shows compliance.

Sec.60.83 Standard for acid mist.

(a) On and after the date on which the performance test required to be conducted by Sec.60.8 is completed, no owner or operator subject to the provisions of this subpart shall cause to be discharged into the atmosphere from any affected facility any gases which:

(1) Contain acid mist, expressed as H2/SO4/, in excess of 0.075 kg per metric ton of acid produced (0.15 lb per ton), the production being expressed as 100 percent H2/SO4/.

ACME Chemicals, Inc. is subject to this standard and has provided a documented emission inventory (or manufacturer guarantee) which shows compliance.

(2) Exhibit 10 percent opacity, or greater.

ACME Chemicals, Inc. understands that this will become a permit condition and has supplied a manufacturer guarantee that the sulfuric acid plant will comply with this standard.

Sec.60.84 Emission monitoring.

(a) A continuous monitoring system for the measurement of sulfur dioxide shall be installed, calibrated, maintained, and operated by the owner or operator. The pollutant gas used to prepare calibration gas mixtures under Performance Specification 2 and for calibration checks under Sec.60.13(d), shall be sulfur dioxide (SO2/). Method 8 shall be used for conducting monitoring system performance evaluations under Sec.60.13(c) except that only the sulfur dioxide portion of the Method 8 results shall be used. The span value shall be set at 1000 ppm of sulfur dioxide.

(b) The owner or operator shall establish a conversion factor for the purpose of converting monitoring data into units of the applicable standard (kg/metric ton, lb/ton). The conversion factor shall be determined, as a minimum, three times daily by measuring the concentration of sulfur dioxide entering the converter using suitable methods (e.g., the Reich test, National Air Pollution Control Administration Publication No. 999-AP-13) and calculating the appropriate conversion factor for each eight-hour period as follows:

CF=k[(1.000-0.015r)/(r-s)]

where:

CF=conversion factor (kg/metric ton per ppm, lb/ton per ppm).
k=constant derived from material balance. For determining CF in metric units, k=0.0653. For determining CF in English units, k=0.1306.
r=percentage of sulfur dioxide by volume entering the gas converter. Appropriate corrections must be made for air injection plants subject to the Administrator's approval.
s=percentage of sulfur dioxide by volume in the emissions to the atmosphere determined by the continuous monitoring system required under paragraph (a) of this section.

(c) The owner or operator shall record all conversion factors and values under paragraph (b) of this section from which they were computed (i.e., CF, r, and s).

ACME Chemicals, Inc. is not proposing to utilize Sections 60.84(a)-(c)listed above to monitor emissions. Instead ACME Chemicals is utilizing 40 CFR 60.84(d) listed below to monitor emissions of sulfur dioxide.

(d) Alternatively, a source that processes elemental sulfur or an ore that contains elemental sulfur and uses air to supply oxygen may use the following continuous emission monitoring approach and calculation procedures in determining SO2/ emission rates in terms of the standard. This procedure is not required, but is an alternative that would alleviate problems encountered in the measurement of gas velocities or production rate. Continuous emission monitoring systems for measuring SO2/, O2/, and CO2/ (if required) shall be installed, calibrated, maintained, and operated by the owner or operator and subjected to the certification procedures in Performance Specifications 2 and 3. The calibration procedure and span value for the SO2/ monitor shall be as specified in paragraph (b) of this section. The span value for CO2/ (if required) shall be 10 percent and for O2/ shall be 20.9 percent (air). A conversion factor based on process rate data is not necessary. Calculate the SO2/ emission rate as follows:

Es/=(Cs/ S)/[0.265-(0.126 %O2/)-(A %CO2/)]

where:

Es/=emission rate of SO2/, kg/metric ton (lb/ton) of 100 percent of H2/SO4/ produced.
Cs/=concentration of SO2/, kg/dscm (lb/dscf).
S=acid production rate factor, 368 dscm/metric ton (11,800 dscf/ton) of 100 percent H2/SO4/ produced.
%O2/=oxygen concentration, percent dry basis.
A=auxiliary fuel factor,
=0.00 for no fuel.
=0.0226 for methane.
=0.0217 for natural gas.
=0.0196 for propane.
=0.0172 for No 2 oil.
=0.0161 for No 6 oil.
=0.0148 for coal.
=0.0126 for coke.
%CO2/= carbon dioxide concentration, percent dry basis.

Note: It is necessary in some cases to convert measured concentration units to other units for these calculations:

Use the following table for such conversions:

From--	To--	Multiply by--
g/scm.....	kg/scm.....	10-3
mg/scm.....	kg/scm.....	10-6
ppm (SO2).....	kg/scm.....	2.660x10-6
ppm (SO2).....	lb/scf.....	1.660x10-7

ACME Chemicals, Inc. has elected to use the monitoring requirements of the preceding section.

(e) For the purpose of reports under Sec.60.7(c), periods of excess emissions shall be all three-hour periods (or the arithmetic average of three consecutive one-hour periods) during which the integrated average sulfur dioxide emissions exceed the applicable standards under Sec.60.82.

ACME acknowledges that this section applies to the sulfuric acid plant.

Sec.60.85 Test methods and procedures.

(a) In conducting the performance tests required in Sec.60.8, the owner or operator shall use as reference methods and procedures the test methods in appendix A of this part or other methods and procedures as specified in this section, except as provided in Sec.60.8(b). Acceptable alternative methods and procedures are given in paragraph (c) of this section.

(b) The owner or operator shall determine compliance with the SO2/ acid mist, and visible emission standards in Sec. Sec. 60.82 and 60.83 as follows:

(1) The emission rate (E) of acid mist or SO2/ shall be computed for each run using the following equation:

E=(CQsd/)/(PK)

where:

E=emission rate of acid mist or SO2/ kg/metric ton (lb/ton) of 100 percent H2/SO4/ produced.
C=concentration of acid mist or SO2/, g/dscm (lb/dscf).
Qsd/=volumetric flow rate of the effluent gas, dscm/hr (dscf/hr).
P=production rate of 100 percent H2/SO4/, metric ton/hr (ton/hr).
K=conversion factor, 1000 g/kg (1.0 lb/lb).

(2) Method 8 shall be used to determine the acid mist and SO2/ concentrations (C's) and the volumetric flow rate (Qsd/) of the effluent gas. The moisture content may be considered to be zero. The sampling time and sample volume for each run shall be at least 60 minutes and 1.15 dscm (40.6 dscf).

(3) Suitable methods shall be used to determine the production rate (P) of 100 percent H2/SO4/ for each run. Material balance over the production system shall be used to confirm the production rate.

(4) Method 9 and the procedures in Sec.60.11 shall be used to determine opacity.

(c) The owner or operator may use the following as alternatives to

the reference methods and procedures specified in this section:

(1) If a source processes elemental sulfur or an ore that contains elemental sulfur and uses air to supply oxygen, the following procedure may be used instead of determining the volumetric flow rate and production rate:

(i) The integrated technique of Method 3 is used to determine the O2/ concentration and, if required, CO2/ concentration.

(ii) The SO2/ or acid mist emission rate is calculated as described in Sec.60.84(d), substituting the acid mist concentration for Cs/ as appropriate.

ACME Chemicals, Inc. acknowledges that performance tests shall be conducted as specified above.

woodgrain millwork

January 31, 2008

Via Certified Mail, Return Receipt Requested

Director
Office of Air Quality
EPA Region 10 1200 Sixth Avenue (OAQ-l 07)
Seattle, WA 98101

Re: Woodgrain Millwork, Inc., Fruitland, ID
40 CFR Part 63, Subpart KK - Compliance Reporting – Second half 2007 Semi-annual Report

Dear Director,

The intent of this letter is to provide our semiannual compliance report.

Our facility falls under SIC codes 2431(Millwork), 2491 (Wood preserving, and a very small portion of the plant has been interpreted to include SIC code 2754 (Gravure printing). Gravure printing is utilized on wood and plastic moldings and on paper in our facility. Only the printing materials applied to plastics and paper are regulated by KK.

The gravure printing is applied in two production lines; the "five head printer (paper)" and the "coatings print (wood and plastic)" operations.

Semi-annual Report

Woodgrain Millwork - Fruitland has been in continuous compliance with 40 CFR Part 63 Subpart KK for this reporting period. Compliance is demonstrated by using the method described in 40 CFR Part 63 Subpart KK Section 63.825(b)(3)(i)(B).

Please note, the calculations conservatively reflect *all* HAPs applied by printing operations (plastic, wood, and paper) are in compliance with KK. (It is not physically practical to separate the quantity used on plastic from the quantity used on wood so both were provided.)

P.O. Box 566 • 300 NW 16th Street • Fruitland, Idaho 83619 • Tel 208.452.3801 • Fax 208.452.3800 •
www.woodgrain.com

woodgrain millwork

Our Commitment to the Environment

We have made significant progress over the past few years in reducing our HAPs emissions in these and other operations. Our HAPs emissions from these operations have decreased from 2,500+ lbs/year in 1998, to only 25 lbs/year in 2007. As shown in the Attachment the second half of 2006 has produced 22.305 lbs of HAPs. We have eliminated most HAPs from our coatings print operation and have completed testing and approved purchases for a new ultra low HAP ink for the five head paper printer operation as well. Our average weight fraction for items purchased the second half of this year is 0.00593 lb HAPs/lb solids.

Conclusion

The changes in chemical usage in printing have significantly reduced the quantity of HAPs emissions. If you have any questions about this submittal please contact me, at (208) 452-3801 Ext. 264.

I certify that, based on information and belief formed after reasonable inquiry, the statements and information in the document and the attachments are true, accurate, and complete.

Sincerely,

Stephen Coe

Stephen Coe
Corporate Environmental Health and Safety Manager

cc: Air Quality Permit Compliance, Idaho DEQ, Boise Regional Office

P.O. Box 566 • 300 NW 16th Street • Fruitland, Idaho 83619 • Tel 208.452.3801 • Fax 208.452.3800 •
www.woodgrain.com

NESHAP KK Semiannual Report

Year 2007 **Half** Second

Department 5 Head Printer

Woodgrain Item Number	Description/Trade Name	lbs HAPs / lb Solids Applied	Quantity Used (gallons)	HAPs Applied (pounds)	Solids Applied (pounds)
1200705	FLEXO WATER BLACK BASE	0.00000	1.00000	0.00000	3.90440
1251644	WOODGRAIN LETDOWN OVERPRINT VA	0.00000	144.00000	0.00000	562.86662
1251646	WOODGRAIN BASE WHITE	0.00000	270.00000	0.00000	1,530.56628
1253194	FLEXO DEFORAMER	0.00000	1.00000	0.00000	8.20672
Totals		0.00000	416.00000	0.00000	2,105.54402

Department Emboss

Woodgrain Item Number	Description/Trade Name	lbs HAPs / lb Solids Applied	Quantity Used (gallons)	HAPs Applied (pounds)	Solids Applied (pounds)
S61B500	STAIN CONCENTRATE, BLK	0.00000	1.00000	0.00000	2.42730
Totals		0.00000	1.00000	0.00000	2.42730

Department Print

Woodgrain Item Number	Description/Trade Name	lbs HAPs / lb Solids Applied	Quantity Used (gallons)	HAPs Applied (pounds)	Solids Applied (pounds)
6B849	LAMPBLACK RS N/X PASTE	0.00000	68.00000	0.00000	246.86122
6R17D	Y/S RED 2B RS N/C PASTE	0.07282	20.00000	5.31600	73.00640
6Y405D	YELLOW H4G RS N/C PASTE	0.10000	70.00000	16.98900	169.89000
ACETONE	ACETONE	0.00000	108.00000	0.00000	0.00000
EEP	ETHYL 3-ETHOXPROPIONATE	0.00000	370.00000	0.00000	0.00000
MEK	2-BUTANONE	0.00000	114.00000	0.00000	0.00000
NBUTYLACETAT	NBUTYLACETATE	0.00000	550.00000	0.00000	0.00000
T75CH46	SHWD NONHAPS CLEAR FAST	0.00000	466.00000	0.00000	1,160.49378
Totals		0.01352	1,766.00000	22.30500	1,650.25140
Overall Totals		0.00593	2,183.00000	22.30500	3,758.22272

NESHAP KK Montly Report

Year 2007 **Month:** 7

Department 5 Head Printer

Woodgrain Item Number	Description/Trade Name	lbs HAPs / lb Solids Applied	Quantity Used (gallons)	HAPs Applied (pounds)	Solids Applied (pounds)
1251644	WOODGRAIN LETDOWN OVERPRINT VA	0.00000	22.00000	0.00000	85.99351
1251646	WOODGRAIN BASE WHITE	0.00000	59.00000	0.00000	334.45708
1253194	FLEXO DEFORAMER	0.00000	1.00000	0.00000	8.20672
Totals		0.00000	82.00000	0.00000	428.65730

Department Print

Woodgrain Item Number	Description/Trade Name	lbs HAPs / lb Solids Applied	Quantity Used (gallons)	HAPs Applied (pounds)	Solids Applied (pounds)
6R17D	Y/S RED 2B RS N/C PASTE	0.07282	5.00000	1.32900	18.25160
EEP	ETHYL 3-ETHOXPROPIONATE	0.00000	70.00000	0.00000	0.00000
NBUTYLACETAT	NBUTYLACETATE	0.00000	110.00000	0.00000	0.00000
T75CH46	SHWD NONHAPS CLEAR FAST	0.00000	95.00000	0.00000	236.58135
Totals		0.00522	280.00000	1.32900	254.83295
Overall Totals		0.00194	362.00000	1.32900	683.49025

NESHAP KK Montly Report

Year 2007 **Month:** 8

Department 5 Head Printer

Woodgrain Item Number	Description/Trade Name	lbs HAPs / lb Solids Applied	Quantity Used (gallons)	HAPs Applied (pounds)	Solids Applied (pounds)
1200705	FLEXO WATER BLACK BASE	0.00000	1.00000	0.00000	3.90440
1251644	WOODGRAIN LETDOWN OVERPRINT VA	0.00000	11.00000	0.00000	42.99676
1251646	WOODGRAIN BASE WHITE	0.00000	25.00000	0.00000	141.71910
Totals		0.00000	37.00000	0.00000	188.62026

Department Print

Woodgrain Item Number	Description/Trade Name	lbs HAPs / lb Solids Applied	Quantity Used (gallons)	HAPs Applied (pounds)	Solids Applied (pounds)
6B849	LAMPBLACK RS N/X PASTE	0.00000	5.00000	0.00000	18.15156
6R17D	Y/S RED 2B RS N/C PASTE	0.07282	5.00000	1.32900	18.25160
6Y405D	YELLOW H4G RS N/C PASTE	0.10000	5.00000	1.21350	12.13500
ACETONE	ACETONE	0.00000	54.00000	0.00000	0.00000
EEP	ETHYL 3-ETHOXPROPIONATE	0.00000	70.00000	0.00000	0.00000
NBUTYLACETAT	NBUTYLACETATE	0.00000	110.00000	0.00000	0.00000
T75CH46	SHWD NONHAPS CLEAR FAST	0.00000	106.00000	0.00000	263.97498
Totals		0.00814	355.00000	2.54250	312.51314
Overall Totals		0.00507	392.00000	2.54250	501.13340

NESHAP KK Montly Report

Year 2007 **Month:** 9

Department 5 Head Printer

Woodgrain Item Number	Description/Trade Name	lbs HAPs / lb Solids Applied	Quantity Used (gallons)	HAPs Applied (pounds)	Solids Applied (pounds)
1251644	WOODGRAIN LETDOWN OVERPRINT VA	0.00000	39.00000	0.00000	152.44304
1251646	WOODGRAIN BASE WHITE	0.00000	75.00000	0.00000	425.15730
Totals		0.00000	114.00000	0.00000	577.60034

Department Print

Woodgrain Item Number	Description/Trade Name	lbs HAPs / lb Solids Applied	Quantity Used (gallons)	HAPs Applied (pounds)	Solids Applied (pounds)
6B849	LAMPBLACK RS N/X PASTE	0.00000	40.00000	0.00000	145.21248
6Y405D	YELLOW H4G RS N/C PASTE	0.10000	40.00000	9.70800	97.08000
EEP	ETHYL 3-ETHOXPROPIONATE	0.00000	80.00000	0.00000	0.00000
MEK	2-BUTANONE	0.00000	54.00000	0.00000	0.00000
NBUTYLACETAT	NBUTYLACETATE	0.00000	110.00000	0.00000	0.00000
T75CH46	SHWD NONHAPS CLEAR FAST	0.00000	106.00000	0.00000	263.97498
Totals		0.01918	430.00000	9.70800	506.26746
Overall Totals		0.00896	544.00000	9.70800	1,083.86780

NESHAP KK Montly Report

Year 2007 **Month:** 10

Department 5 Head Printer

Woodgrain Item Number	Description/Trade Name	lbs HAPs / lb Solids Applied	Quantity Used (gallons)	HAPs Applied (pounds)	Solids Applied (pounds)
1251644	WOODGRAIN LETDOWN OVERPRINT VA	0.00000	16.00000	0.00000	62.54074
1251646	WOODGRAIN BASE WHITE	0.00000	31.00000	0.00000	175.73168
Totals		0.00000	47.00000	0.00000	238.27242

Department Print

Woodgrain Item Number	Description/Trade Name	lbs HAPs / lb Solids Applied	Quantity Used (gallons)	HAPs Applied (pounds)	Solids Applied (pounds)
6B849	LAMPBLACK RS N/X PASTE	0.00000	8.00000	0.00000	29.04250
EEP	ETHYL 3-ETHOXPROPIONATE	0.00000	60.00000	0.00000	0.00000
NBUTYLACETAT	NBUTYLACETATE	0.00000	55.00000	0.00000	0.00000
T75CH46	SHWD NONHAPS CLEAR FAST	0.00000	53.00000	0.00000	131.98749
Totals		0.00000	176.00000	0.00000	161.02999
Overall Totals		0.00000	223.00000	0.00000	399.30241

NESHAP KK Montly Report

Year 2007 **Month:** 11

Department 5 Head Printer

Woodgrain Item Number	Description/Trade Name	lbs HAPs / lb Solids Applied	Quantity Used (gallons)	HAPs Applied (pounds)	Solids Applied (pounds)
1251644	WOODGRAIN LETDOWN OVERPRINT VA	0.00000	16.00000	0.00000	62.54074
1251646	WOODGRAIN BASE WHITE	0.00000	24.00000	0.00000	136.05034
Totals		0.00000	40.00000	0.00000	198.59107

Department Print

Woodgrain Item Number	Description/Trade Name	lbs HAPs / lb Solids Applied	Quantity Used (gallons)	HAPs Applied (pounds)	Solids Applied (pounds)
6B849	LAMPBLACK RS N/X PASTE	0.00000	15.00000	0.00000	54.45468
6R17D	Y/S RED 2B RS N/C PASTE	0.07282	5.00000	1.32900	18.25160
EEP	ETHYL 3-ETHOXPROPIONATE	0.00000	35.00000	0.00000	0.00000
MEK	2-BUTANONE	0.00000	5.00000	0.00000	0.00000
NBUTYLACETAT	NBUTYLACETATE	0.00000	110.00000	0.00000	0.00000
T75CH46	SHWD NONHAPS CLEAR FAST	0.00000	53.00000	0.00000	131.98749
Totals		0.00649	223.00000	1.32900	204.69377
Overall Totals		0.00330	263.00000	1.32900	403.28484

NESHAP KK Montly Report

Year 2007 **Month:** 12

Department 5 Head Printer

Woodgrain Item Number	Description/Trade Name	lbs HAPs / lb Solids Applied	Quantity Used (gallons)	HAPs Applied (pounds)	Solids Applied (pounds)
1251644	WOODGRAIN LETDOWN OVERPRINT VA	0.00000	40.00000	0.00000	156.35184
1251646	WOODGRAIN BASE WHITE	0.00000	56.00000	0.00000	317.45078
Totals		0.00000	96.00000	0.00000	473.80262

Department Emboss

Woodgrain Item Number	Description/Trade Name	lbs HAPs / lb Solids Applied	Quantity Used (gallons)	HAPs Applied (pounds)	Solids Applied (pounds)
S61B500	STAIN CONCENTRATE, BLK	0.00000	1.00000	0.00000	2.42730
Totals		0.00000	1.00000	0.00000	2.42730

Department Print

Woodgrain Item Number	Description/Trade Name	lbs HAPs / lb Solids Applied	Quantity Used (gallons)	HAPs Applied (pounds)	Solids Applied (pounds)
6R17D	Y/S RED 2B RS N/C PASTE	0.07282	5.00000	1.32900	18.25160
6Y405D	YELLOW H4G RS N/C PASTE	0.10000	25.00000	6.06750	60.67500
ACETONE	ACETONE	0.00000	54.00000	0.00000	0.00000
EEP	ETHYL 3-ETHOXPROPIONATE	0.00000	55.00000	0.00000	0.00000
MEK	2-BUTANONE	0.00000	55.00000	0.00000	0.00000
NBUTYLACETAT	NBUTYLACETATE	0.00000	55.00000	0.00000	0.00000
T75CH46	SHWD NONHAPS CLEAR FAST	0.00000	53.00000	0.00000	131.98749
Totals		0.03507	302.00000	7.39650	210.91409
Overall Totals		0.01076	399.00000	7.39650	687.14401

Product Comp.

Woodgrain Item #	Building	Weight (lb/gal)	VOC by Weight	HAPs by Weight
01031	2	7.042	100.00000%	0.00000%
10532	3	11.5	1.00000%	0.00000%
108A4	2	8.15	54.70000%	0.00000%
108B2	2	7.8	60.50000%	33.70000%
108B8	1	7.8552	63.60430%	0.00000%
108B8	2	7.8552	63.60430%	0.00000%
108D7	2	9.8	47.47000%	30.00000%
108R8	2	8.2	69.00000%	40.00000%
108R9	2	8.1	60.00000%	0.00000%
108R9	1	8.1	60.00000%	0.00000%
108W33	2	9.1	57.00000%	0.00000%
108W33	1	9.1	57.00000%	0.00000%
108Y18	2	9.8	47.15000%	36.00000%
108Y21	2	7.8	65.00000%	0.00000%
108Y21	1	7.8	65.00000%	0.00000%
110825A	2	8.4	54.20000%	37.20000%
1197152	1	8.41	0.29000%	0.26000%
1197597	1	11.2	4.73000%	0.25900%
1200704	1	8.74	0.54000%	0.00000%
1200705	1	9.08	0.00000%	0.00000%
1200957	1	8.66	0.00000%	0.00000%
1224031	1	8.24	0.00000%	0.00000%
1225258	1	8.66	0.80000%	0.00000%
1229669	1	9.08	0.63000%	0.00000%
1245409	1	8.33	0.29000%	0.26000%
1251644	1	8.49	0.23000%	0.00000%
1251646	1	10.58	0.52000%	0.00000%
1253194	1	8.33	1.48000%	0.00000%

Woodgrain Item #	Building	Weight (lb/gal)	VOC by Weight	HAPs by Weight
22110	1	7.9	1.10000%	0.00000%
2H850	1	8.6	0.00080%	0.00080%
4019-MIXSTAIN	1	6.65	87.50000%	0.00000%
4021-MIXSTAIN	1	6.81	84.60000%	0.00000%
4024-MIXSTAIN	1	7.05	78.00000%	5.00000%
4025-MIXSTAIN	1	6.43	93.60000%	0.00000%
40B053	1	13.1	3.26000%	3.26000%
4443-MIXSTAIN	1	7.2	72.60000%	0.00000%
5S775D	2	8.33	59.20000%	0.00000%
5S775D	1	8.33	59.20000%	0.00000%
6B849	1	8.82	58.84000%	0.00000%
6B849	2	8.82	58.84000%	0.00000%
6N371	2	9.85	50.39000%	0.00000%
6N371	1	9.85	50.39000%	0.00000%
6R17D	2	8.86	58.80000%	3.00000%
6R17D	1	8.86	58.80000%	3.00000%
6R850	2	12.44	40.67000%	0.00000%
6R850	1	12.44	40.67000%	0.00000%
6W848	2	13.76	32.20000%	0.00000%
6W848	1	13.76	32.20000%	0.00000%
6Y362	2	11.35	50.00000%	25.00000%
6Y405D	1	8.09	70.00000%	3.00000%
6Y405D	2	8.09	70.00000%	3.00000%
6Y70D	1	8.29	39.60000%	0.00000%
6Y70D	2	8.29	39.60000%	0.00000%
6Y852	1	10.67	53.00000%	0.00000%
6Y852	2	10.67	53.00000%	0.00000%
7219	2	6.91	72.00000%	0.00000%
804SW	2	7.47	0.00000%	0.00000%
808572	2	8.9	0.10000%	0.10000%

Woodgrain Item #	Building	Weight (lb/gal)	VOC by Weight	HAPs by Weight
844LFYEL	2	9.6	39.90000%	0.00000%
91T35	2	7.3495	72.00000%	60.00000%
91T38	2	7.4	74.00000%	70.00000%
91T39	2	7.5	74.00000%	0.00000%
92D178	1	9.947	14.47000%	3.48000%
A60B1	2	11.24	24.00000%	24.00000%
A60L1	2	11.01	25.00000%	25.00000%
A60N1	2	12.68	24.00000%	24.00000%
A60R2	2	16.96	15.00000%	15.00000%
A60W1	2	18.47	10.00000%	10.00000%
A60Y3	2	14.76	0.00000%	0.00000%
ACETONE	1	6.6	100.00000%	0.00000%
ACETONE	2	6.6	100.00000%	0.00000%
ALCOHOLVANZOL	2	6.6	100.00000%	5.20000%
BHD046T70	2	8.54	3.20000%	0.00000%
BK2	1	8.96	100.00000%	0.00000%
CHE-0193	4	12	95.00000%	90.00000%
CHE-0239	1 through11	0	0.00000%	0.00000%
CHE-0687	1 through11	10.84	0.00000%	0.00000%
CHE-097001	1 through11			
CHE-12092	1 through11	11.25	0.00000%	0.00000%
CHE-19917	1 through11	10.33	90.00000%	
CHE-24231	1 through11	9.16	0.00000%	0.00000%
CHE-51414	1 through11			
CHE-54531	4	8.49	31.50000%	0.00000%
CHE-732	1 through11	8.66	0.00000%	0.00000%
CHE-7651483	1 through11	5.58	97.00000%	6.00000%
CHE-7651843	4	5.58	97.00000%	6.00000%
CHE-8700	4	7.07	100.00000%	65.00000%
CHE-8822	1 through11	18.33	0.00000%	0.00000%

Woodgrain Item #	Building	Weight (lb/gal)	VOC by Weight	HAPs by Weight
CHE-9105	4	7.3	1.00000%	0.00000%
CHE-9121110	1 through11	8.45	10.00000%	0.00000%
CHE-9249	4	5.8	0.75000%	0.35000%
CHE-9291	4	5.8	0.79000%	0.45000%
CHE-9764	4			
CHE-9766	4	5.8	0.60000%	0.25000%
CHE-BIGORANGE	1 through11	7.08	92.70000%	0.00000%
CHE-BIGORANGE 1GAL	1 through11	7.08	92.70000%	0.00000%
CHE-BS	1 through11	8.33		
CHE-C320	1 through11	12.08	82.00000%	82.00000%
CHE-DAP	2	18.43	0.00000%	0.00000%
CHE-GCV	1 through11	0	0.00000%	0.00000%
CHE-GRIP	1 through11	7.83	18.00000%	0.00000%
CHE-KOOLKUT	4	7.5	0.00000%	0.00000%
CHE-LCS	1 through11	8.3	1.00000%	0.00000%
CHE-MAERO	1 through11	8.75	0.00000%	0.00000%
CHE-PC0345	1 through11	8.33	0.00000%	0.00000%
CHE-TAKTOSAN	1 through11	7.9	0.00000%	0.00000%
CHE-U17244	1 through11	7	27.50000%	0.00000%
CHE-UTR20	1 through11	10.99	75.00000%	75.00000%
CHE-WBL795	3			
CHE-WD40	1 through11	6.9	49.50000%	0.00000%
CHE-ZEP45	1 through11	7.16	73.00000%	10.00000%
CHE-ZEPAID	1 through11	5.71	95.00000%	90.00000%
DF8	1	8.3	1.00000%	0.00025%
DOWANOLETHER	2	7.36	100.00000%	0.00000%
DOWANOLETHER	1	7.36	100.00000%	0.00000%
E60WL510	2	12.5	0.97900%	0.00000%
E60WL520	2	12.26	0.97900%	0.00000%
E60WL528	2	12.39	1.00000%	0.00000%

Woodgrain Item #	Building	Weight (lb/gal)	VOC by Weight	HAPs by Weight
E60WV504	3	12.69	1.00000%	0.00000%
E60YL502	2	12.15	0.98000%	0.00000%
EEP	2	7.91	100.00000%	0.00000%
EEP	1	7.91	100.00000%	0.00000%
Emboss and Stain - HAPs	1	8	78.00000%	20.80000%
ETHYLACETATE	2	7.46	100.00000%	0.00000%
LKF017840	2	8.58	8.50000%	1.80000%
M64RL500	2	8.91	3.30000%	0.00000%
M64W501	2	9.13	6.40000%	0.00000%
M64WL505	2	10.55	3.30000%	0.00000%
M64YL500	2	9.29	3.00000%	0.00000%
M768PEL	1	7.25	0.00000%	0.00000%
MAK	2	6.76	100.00000%	0.00000%
MEK	2	6.74	100.00000%	0.00000%
MEK	1	6.74	100.00000%	0.00000%
MINERALSPIRITS	1 through11	6.7	100.00000%	2.00000%
NBUTYLACETATE	2	7.31	100.00000%	0.00000%
NBUTYLACETATE	1	7.31	100.00000%	0.00000%
OK412	2	16.4	0.00000%	0.00000%
P63YH15	2	8.88	60.20000%	0.00000%
P63YL0002	2	8.82	42.70000%	3.50000%
P65BH26	2	7.51	71.60000%	22.00000%
P65BH31	2	7.57	68.30000%	23.30000%
P65BH36	2	7.7	74.20000%	24.20000%
P65BH37	2	7.91	56.40000%	0.00000%
P65BL1	2	7.64	57.50000%	5.20000%
P65RH31	2	8.4	58.00000%	31.00000%
P65RH34	2	7.75	68.00000%	26.20000%
P65RH38	2	8.62	50.00000%	0.00000%
P65RH39	2	7.7	74.20000%	31.20000%

Woodgrain Item #	Building	Weight (lb/gal)	VOC by Weight	HAPs by Weight
P65RH40	2	8.25	51.50000%	0.00000%
P65RH41	2	8.09	51.50000%	0.00000%
P65RL0001	2	7.82	58.70000%	4.20000%
P65WH70	2	8.6	58.00000%	32.00000%
P65WH89	2	9.11	44.80000%	0.00000%
P65WH95	2	9.06	55.20000%	0.00000%
P65WL0004	2	8.72	50.60000%	5.20000%
P65XX001	2	8.41	42.60000%	3.20000%
P65YH33	2	8.8	54.60000%	32.20000%
P65YH41	2	9.2	44.70000%	0.00000%
P65YH42	2	9.08	45.40000%	0.00000%
P65YH49	2	8.1	52.20000%	0.00000%
P65YH50	2	8.49	49.00000%	0.10000%
P65YH52	2	8.35	47.70000%	0.10000%
P65YL0001	2	8.05	56.40000%	4.20000%
P65YL2	2	7.82	52.30000%	5.20000%
PA130	1	8.8	5.00000%	0.00100%
PA285	1	9.07	0.00000%	0.00000%
PA310	1	8.4	0.00000%	0.00000%
PAI-0112	1 through11	6.1	59.39000%	16.00000%
PAI-0114	1 through11	6.1	59.28000%	16.00000%
PAI-10000	1 through11	6	64.05000%	18.00000%
PAI-10001	1 through11	5.84	64.77000%	16.00000%
PAI-10003	1 through11	5.96	64.31000%	15.00000%
PAI-10005	1 through11	5.88	63.05000%	13.00000%
PAI-10008	1 through11	6.91	78.00000%	27.00000%
PAI-1318	1 through11	6.83	78.00000%	27.00000%
PAI-1929	1 through11	6.45	48.30000%	17.00000%
PAI-2115	1 through11	7.63	95.00000%	60.00000%
PAI-2125	1 through11	7.47	94.00000%	50.00000%

Woodgrain Item #	Building	Weight (lb/gal)	VOC by Weight	HAPs by Weight
PAI-2143	1 through11	8.75	40.00000%	40.00000%
PAI-2148	1 through11	8.29	40.00000%	40.00000%
PAI-2155	1 through11	7.9	45.00000%	45.00000%
PAI-2163	1 through11	7.85	35.00000%	35.00000%
PAI-2169	1 through11	10.07	30.00000%	25.00000%
PAI-2178	1 through11	10.3	35.00000%	35.00000%
PAI-2179	1 through11	9.1	45.00000%	45.00000%
PAI-2187	1 through11	8.21	40.00000%	40.00000%
PAI-2190	1 through11	10.63	35.00000%	30.00000%
PAI-2192	1 through11	9.09	45.00000%	45.00000%
PAI-2348	1 through11	10.16	35.00000%	35.00000%
PAI-2507	4	6.43	46.20000%	19.00000%
PAI-3101	1 through11	7.19	52.90000%	12.00000%
PAI-3104	1 through11	7.19	52.90000%	12.00000%
PAI-3105	1 through11	7.19	52.90000%	12.00000%
PAI-3106	1 through11	7.15	52.90000%	12.00000%
PAI-8991T	1 through11	8.33	45.00000%	25.00000%
PAI-8991T-G	1 through11	0	0.00000%	0.00000%
PAI-8999	1 through11	8.33	45.00000%	25.00000%
PAI-8999B	1 through11	8.33	45.00000%	25.00000%
PAI-8999BIN-TAN	1 through11	8.33	45.00000%	25.00000%
PAI-8999DB	1 through11	8.33	45.00000%	25.00000%
PAI-8999FG	1 through11	8.33	45.00000%	25.00000%
PAI-8999-G	1 through11	8.33	45.00000%	25.00000%
PAI-A16	1 through11	6.09	55.92000%	26.00000%
PAI-A24	1 through11	6.15	55.23000%	25.00000%
S61B500	1	8.99	73.00000%	0.00000%
S61E501	1	8.65	80.00000%	0.00000%
S61L505	1	8.35	69.90000%	0.00000%
S61R503	1	8.7	70.00000%	0.00000%

Woodgrain Item #	Building	Weight (lb/gal)	VOC by Weight	HAPs by Weight
S61R506	1	8.59	79.98000%	0.00000%
S61Y504	1	8.5	70.00000%	0.00000%
S64B30	1	7.67	57.00000%	1.20000%
S64R33	1	9.86	42.00000%	0.20000%
S64R35	1	7.1	78.00000%	0.00000%
S64W31	1	13.15	20.00000%	0.00000%
S64Y32	1	9.77	42.00000%	0.20000%
T67F6	2	7.37	26.70000%	0.00000%
T75CH46	2	7.71	67.60000%	0.00000%
T75CH46	1	7.71	67.60000%	0.00000%
T75XXF001-10	2	7.39	78.80000%	10.20000%
T75XXF001-25	2	7.39	79.00000%	10.20000%
T82B2751	2	7.8	74.00000%	0.00000%
T82B2751	1	7.8	74.00000%	0.00000%
T82C2699	2	7.41	76.70000%	0.10000%
T82CH5	2	8.2	53.40000%	1.20000%
T82CH5	1	8.2	53.40000%	1.20000%
T82L2753	2	8	66.00000%	0.00000%
T82L2753	1	8	66.00000%	0.00000%
T82R2752	2	7.03	89.50000%	1.00000%
T82R2752	1	7.03	89.50000%	1.00000%
T82R2754	2	9.35	61.90000%	0.00000%
T82R2754	1	9.35	61.90000%	0.00000%
T82W2756	2	11.6	41.00000%	0.00000%
T82W2756	1	11.6	41.00000%	0.00000%
T82Y2753	2	8.32	53.50000%	0.10000%
T82Y2755	2	8.6	62.00000%	0.00000%
T82Y2755	1	8.6	62.00000%	0.00000%
VM&P	2	6.2	100.00000%	0.00000%
Waste Paint - HAPs	2	8	60.03500%	25.27500%

Woodgrain Item #	Building	Weight (lb/gal)	VOC by Weight	HAPs by Weight
WBI2055	1	10	15.00000%	0.00000%
WBI2208	1	10	15.00000%	0.00000%
WBI760S	1	8.58	22.70000%	5.00000%
WBITD870	1	10.7	9.00000%	4.41000%
WBITD871	1	9.8	9.00000%	5.00000%
WBITD872	1	9.8	9.00000%	5.00000%
WD2720	4	9.1	0.40000%	0.00000%
WG1700	2	11.9	3.00000%	0.00000%
WG1973	1	8.6	6.00000%	0.00000%
WOODGRAINBLEND3	2	8	100.00000%	62.00000%
X-C100Y	4	10.6	0.00000%	0.00000%
X-CHEM-04747	4	8.3	0.50000%	45.00000%
X-CHEM-1049	1 through11	8.82	0.00000%	0.00000%
X-CHEM-1250120	4	8.4	0.10000%	0.00000%
X-CHEM-1250412	4	6.6	1.00000%	0.00000%
X-CHEM-1300-191	1 through11	12.07	35.00000%	0.00000%
X-CHEM-1540W	4	7.385	0.00000%	0.00000%
X-CHEM-158	1 through11			
X-CHEM-2200210/18	4	1.186	75.00000%	70.00000%
X-CHEM-2200512/18	4	11.8	100.00000%	90.00000%
X-CHEM-2200875/12	4	7.2	1.00000%	0.00000%
X-CHEM-2317-2420	4	7.08	0.00000%	0.00000%
X-CHEM-25218	1 through11	0	0.00000%	0.00000%
X-CHEM-2F146	4	7.7	20.00000%	0.00000%
X-CHEM-30010	1 through11	7.4	27.00000%	0.00000%
X-CHEM-33-687	1 through11	12.07	26.50000%	4.00000%
X-CHEM-35	4			
X-CHEM-4137	1 through11			
X-CHEM-42836	1 through11	8.19	0.00000%	0.00000%
X-CHEM-4600	4	0	0.00000%	0.00000%

Woodgrain Item #	Building	Weight (lb/gal)	VOC by Weight	HAPs by Weight
X-CHEM-5601025	5	7.16	0.00000%	0.00000%
X-CHEM-57625	1 through11	8.08	95.00000%	6.00000%
X-CHEM-5HD99	4	6.88	1.00000%	0.00000%
X-CHEM-607	4	7.5	0.00000%	0.00000%
X-CHEM-6371	4	12.77	12.00000%	12.00000%
X-CHEM-6383	4	6.4	100.00000%	11.00000%
X-CHEM-6802	4	7.24	0.00000%	0.00000%
X-CHEM-7350000	1 through11	0	0.00000%	0.00000%
X-CHEM-7440-59-7	1 through11	0	0.00000%	0.00000%
X-CHEM-7651150	1 through11	9.1	73.00000%	50.00000%
X-CHEM-765-1188	1 through11	9.16	37.00000%	0.00000%
X-CHEM-765-1244	4	8.99	17.50000%	15.00000%
X-CHEM-765-1397	1 through11	7.5	0.00000%	0.00000%
X-CHEM-7652657	1 through11	10.048	0.00000%	0.00000%
X-CHEM-85-140	4	7.4	0.00000%	0.00000%
X-CHEM-8800125	4	8.33	9.80000%	0.00000%
X-CHEM-8803625	1 through11	0	0.00000%	0.00000%
X-CHEM-90W	4	7.4	0.00000%	0.00000%
X-CHEM-9793	1 through11	8.33	0.00000%	0.00000%
X-CHEM-9794	1 through11	8.33	0.00000%	0.00000%
X-CHEM-ABC	2	0	0.00000%	0.00000%
X-CHEM-AC500	4	11.4	0.00000%	0.00000%
X-CHEM-ANTIFREEZE	1 through11	9.3	97.00000%	97.00000%
X-CHEM-ARGON	4	9.07	0.00000%	0.00000%
X-CHEM-ATF-II	4	7.33	0.00000%	0.00000%
X-CHEM-AW46	4	7.33	0.00000%	0.00000%
X-CHEM-AWWR-32	4	7.42	0.00000%	0.00000%
X-CHEM-BC	2	0	0.00000%	0.00000%
X-CHEM-BEIGEBARRIER	1	8.51	65.80000%	8.10000%
X-CHEM-BLADE CLEAN	4	0	0.00000%	

Woodgrain Item #	Building	Weight (lb/gal)	VOC by Weight	HAPs by Weight
X-CHEM-BUSAN1127	4	7.596	0.72269%	7.22269%
X-CHEM-CB	4	8.33	1.00000%	0.00000%
X-CHEM-CFL OIL	4	0	0.00000%	
X-CHEM-CLEANGREEN	4	7.05	0.00000%	0.00000%
X-CHEM-DEICER	1 through11	7.16	89.00000%	82.00000%
X-CHEM-DESSICANT	5	6.01	0.00000%	0.00000%
X-CHEM-DIBUTYLPHTHA	4	8.69	100.00000%	100.00000%
X-CHEM-DISAPATE	3			
X-CHEM-EQUIP-RENTAL	1 through11	0	0.00000%	0.00000%
X-CHEM-EXRUST	3	10.83	90.00000%	0.00000%
X-CHEM-EXXSOL D40	4	6.447	39.07000%	0.00020%
X-CHEM-FORMULA 77	3	9.2	0.00000%	0.00000%
X-CHEM-FUEL-DIESEL	1 through11	7.21	100.00000%	1.00000%
X-CHEM-FUEL-DIESEL-2-	1 through11	7.21	100.00000%	1.00000%
X-CHEM-FUEL-GASOLIN	1 through11	5.83	100.00000%	34.70000%
X-CHEM-FUEL-PROPANE	1 through11	4.3	100.00000%	0.00000%
X-CHEM-FUEL-PROPANE	4	4.3	100.00000%	0.00000%
X-CHEM-FUEL-TANK-RE	1 through11	0	0.00000%	0.00000%
X-CHEM-GAL6802	1 through11	10.04	35.80000%	29.30000%
X-CHEM-GLYCOLETHER	1	7.94	100.00000%	0.00000%
X-CHEM-HD	4	7.5	0.00000%	0.00000%
X-CHEM-HD220	3	7.4	0.00000%	0.00000%
X-CHEM-HEAT-PROPAN	1 through11	0	0.00000%	0.00000%
X-CHEM-HEAT-PROPAN	1 through11	0	0.00000%	0.00000%
X-CHEM-HYD-TRACTOR	4	7.33	0.00000%	0.00000%
X-CHEM-ICEMELT	1 through11	16.5	0.00000%	0.00000%
X-CHEM-J8R114-32	4	9.06	0.10000%	0.10000%
X-CHEM-JETPLEXEP	1 through11	63.4	0.00000%	0.00000%
X-CHEM-JOKISCH	4	0	0.00000%	0.00000%
X-CHEM-KO1	4	21.75	0.00000%	0.00000%

Woodgrain Item #	Building	Weight (lb/gal)	VOC by Weight	HAPs by Weight
X-CHEM-LAYDUST	1	7.25	0.00000%	0.00000%
X-CHEM-LUBE-DIESEL-2-	1 through11	7.21	100.00000%	1.00000%
X-CHEM-LUBE-DIESEL-2-	1 through11	7.21	100.00000%	1.00000%
X-CHEM-LUBIE-8	1 through11	7.5	30.00000%	0.00000%
X-CHEM-MEQQEMCOB	3	8.96	0.00000%	0.00000%
X-CHEM-MICRO-90	1 through11	9.45	0.00000%	0.00000%
X-CHEM-MZF	3			
X-CHEM-PAI-1300	1 through11	9.5	36.80000%	0.00000%
X-CHEM-PAI-2781	1 through11	9.33	13.50000%	0.00000%
X-CHEM-PAI-CHALKBOA	1 through11	10.74	0.00000%	0.00000%
X-CHEM-PK50	5	0	0.00000%	0.00000%
X-CHEM-POSITIVE 170	4			
X-CHEM-ROUND UP	1 through11	9.98	0.00000%	0.00000%
X-CHEM-RTV664	1 through11	10.7	0.70000%	0.30000%
X-CHEM-RTV668A	1 through11	10.7	0.30000%	0.30000%
X-CHEM-SILIKROIL	4	7.3	60.00000%	0.00000%
X-CHEM-STP-OIL-T	1 through11	7.45	0.00000%	0.00000%
X-CHEM-SULFAMIC ACID	4	17.7	0.00000%	0.00000%
X-CHEM-TREWAX	4	8.33	75.00000%	0.00000%
X-CHEM-UN1001	4	9.07	0.00000%	0.00000%
X-CHEM-UN1066	4	9.07	0.00000%	0.00000%
X-CHEM-UN1072	4	9.07	0.00000%	0.00000%
X-CHEM-UTP EXOBOND	4	0	0.00000%	0.00000%
X-CHEM-UTP EXOLIQ	4	0	0.00000%	0.00000%
X-CHEM-UV-#5-FILLER	2	11.5	1.00000%	1.00000%
X-CHEM-WD2703S	5	9.1	0.00000%	0.00000%
X-CHEM-WD2703S	4	9.1	0.00000%	0.00000%
X-CHEM-WE-AH-L	4	13.4	0.00000%	0.00000%
X-CHEM-WE-KM-4	4	20.41	0.00000%	0.00000%
X-CHEM-WOODLIFE41C	4	7.3	32.00000%	0.00000%

Woodgrain Item #	Building	Weight (lb/gal)	VOC by Weight	HAPs by Weight
X-CHEM-WOODLIFEF15	4	6.6	38.02500%	0.00000%
X-CHEM-WPBR06	3	11.41	17.50000%	0.00000%
X-CHEM-WW30	6	9.75	0.00000%	0.00000%
X-CHEM-X954801	3	6.7	98.00000%	0.00000%
X-CHEM-ZEP2000	4	0	0.00000%	
X-CHEM-ZEP45	1 through11	7.16	73.00000%	10.00000%
X-CHEM-ZEPERASE	1 through11	7.75	49.80000%	80.00000%
X-CHEM-ZEPGROOVY	1 through11	8.61	49.00000%	0.00000%
X-PAI-10505	3	14.25	2.00000%	0.00000%
X-PAI-10531	2	8.33	2.00000%	0.00000%
X-PAI-E60WJ0545	3	12.73	0.40000%	0.00000%
X-PAI-E60WL517	3	12	1.70000%	0.00000%
X-PAI-WHITE ACRYLIC P	3	14.03	0.30000%	0.00000%
X-WD2403	4	9.1	2.09600%	0.00500%
X-WD2403	5	9.1	2.09600%	0.00500%

VOC/HAP Emission Details

Month	Bld	Woodgrain Item Number	Quantity Used	Weight	Unit of Measure	% VOC by Weight	% HAPs by Weight	Pounds VOC	Pounds HAPs
1	1	1197152	13.00	8.41	Gallons	0.29%	0.26%	0.317	0.284
1	1	1200704	1.00	8.74	Gallons	0.54%	0.00%	0.047	0.000
1	1	1200705	1.00	9.08	Gallons	0.00%	0.00%	0.000	0.000
1	1	1225258	1.00	8.66	Gallons	0.80%	0.00%	0.069	0.000
1	1	1229669	1.00	9.08	Gallons	0.63%	0.00%	0.057	0.000
1	1	1251644	5.00	8.49	Gallons	0.23%	0.00%	0.098	0.000
1	1	1251646	41.00	10.58	Gallons	0.52%	0.00%	2.256	0.000
1	1	1253194	1.00	8.33	Gallons	1.48%	0.00%	0.123	0.000
1	1	22110	2,790.00	7.90	Pounds	1.10%	0.00%	30.690	0.000
1	1	2H850	13,600.00	8.60	Pounds	0.00%	0.00%	0.109	0.109
1	1	6W848	1.00	13.76	Gallons	32.20%	0.00%	4.431	0.000
1	1	6Y405D	1.00	8.09	Gallons	70.00%	3.00%	5.663	0.243
1	1	6Y70D	0.20	8.29	Gallons	39.60%	0.00%	0.657	0.000
1	1	6Y852	1.00	10.67	Gallons	53.00%	0.00%	5.655	0.000
1	1	DOWANOLETHER	46.00	7.36	Gallons	100.00%	0.00%	338.560	0.000
1	1	NBUTYLACETATE	11.00	7.31	Gallons	100.00%	0.00%	80.410	0.000
1	1	PA310	7,200.00	8.40	Pounds	0.00%	0.00%	0.000	0.000
1	1	T82B2751	2.60	7.80	Gallons	74.00%	0.00%	15.007	0.000
1	1	T82L2753	0.80	8.00	Gallons	66.00%	0.00%	4.224	0.000
1	1	T82R2752	2.00	7.03	Gallons	89.50%	1.00%	12.584	0.141
1	1	T82W2756	0.80	11.60	Gallons	41.00%	0.00%	3.805	0.000
1	2	01031	1,320.00	7.04	Gallons	100.00%	0.00%	9,295.440	0.000
1	2	6W848	4.00	13.76	Gallons	32.20%	0.00%	17.723	0.000
1	2	6Y405D	4.00	8.09	Gallons	70.00%	3.00%	22.652	0.971

Month	Bld	Woodgrain Item Number	Quantity Used	Weight	Unit of Measure	% VOC by Weight	% HAPs by Weight	Pounds VOC	Pounds HAPs
1	2	6Y70D	0.80	8.29	Gallons	39.60%	0.00%	2.626	0.000
1	2	6Y852	4.00	10.67	Gallons	53.00%	0.00%	22.620	0.000
1	2	7219	50.00	6.91	Gallons	72.00%	0.00%	248.760	0.000
1	2	808572	1,560.00	8.90	Pounds	0.10%	0.10%	1.560	1.560
1	2	A60R2	1.00	16.96	Gallons	15.00%	15.00%	2.544	2.544
1	2	CHE-DAP	0.16	18.43	Gallons	0.00%	0.00%	0.000	0.000
1	2	DOWANOLETHER	184.00	7.36	Gallons	100.00%	0.00%	1,354.240	0.000
1	2	E60WL510	245.00	12.50	Gallons	0.98%	0.00%	29.982	0.000
1	2	E60YL502	474.00	12.15	Gallons	0.98%	0.00%	56.439	0.000
1	2	M64WL505	5.00	10.55	Gallons	3.30%	0.00%	1.741	0.000
1	2	MAK	5.00	6.76	Gallons	100.00%	0.00%	33.800	0.000
1	2	NBUTYLACETATE	44.00	7.31	Gallons	100.00%	0.00%	321.640	0.000
1	2	P63YL0002	600.00	8.82	Gallons	42.70%	3.50%	2,259.684	185.220
1	2	P65BH36	53.00	7.70	Gallons	74.20%	24.20%	302.810	98.760
1	2	P65BH37	20.00	7.91	Gallons	56.40%	0.00%	89.225	0.000
1	2	P65RH39	111.00	7.70	Gallons	74.20%	31.20%	634.187	266.666
1	2	P65RH40	45.00	8.25	Gallons	51.50%	0.00%	191.194	0.000
1	2	P65RH41	96.00	8.09	Gallons	51.50%	0.00%	399.970	0.000
1	2	P65RL0001	100.00	7.82	Gallons	58.70%	4.20%	459.034	32.844
1	2	P65WH89	700.00	9.11	Gallons	44.80%	0.00%	2,856.896	0.000
1	2	P65WL0004	1,500.00	8.72	Gallons	50.60%	5.20%	6,618.480	680.160
1	2	P65XX001	200.00	8.41	Gallons	42.60%	3.20%	716.532	53.824
1	2	P65YH49	53.00	8.10	Gallons	52.20%	0.00%	224.095	0.000
1	2	P65YH50	550.00	8.49	Gallons	49.00%	0.10%	2,288.055	4.670
1	2	P65YH52	900.00	8.35	Gallons	47.70%	0.10%	3,584.655	7.515
1	2	P65YL0001	300.00	8.05	Gallons	56.40%	4.20%	1,362.060	101.430

Month	Bld	Woodgrain Item Number	Quantity Used	Weight	Unit of Measure	% VOC by Weight	% HAPs by Weight	Pounds VOC	Pounds HAPs
1	2	T67F6	73.00	7.37	Gallons	26.70%	0.00%	143.649	0.000
1	2	T75XXF001-25	200.00	7.39	Gallons	79.00%	10.20%	1,167.620	150.756
1	2	T82B2751	10.40	7.80	Gallons	74.00%	0.00%	60.029	0.000
1	2	T82L2753	3.20	8.00	Gallons	66.00%	0.00%	16.896	0.000
1	2	T82R2752	8.00	7.03	Gallons	89.50%	1.00%	50.335	0.562
1	2	T82W2756	3.20	11.60	Gallons	41.00%	0.00%	15.219	0.000
1	2	T82Y2753	10.00	8.32	Gallons	53.50%	0.10%	44.512	0.083
1	3	E60WV504	17,462.00	12.69	Pounds	1.00%	0.00%	174.620	0.000
1	3	X-PAI-E60WL517	11,800.00	12.00	Pounds	1.70%	0.00%	200.600	0.000
1	3	X-PAI-WHITE ACRY	12,741.00	14.03	Pounds	0.30%	0.00%	38.223	0.000
1	4	X-C100Y	430.00	10.60	Pounds	0.00%	0.00%	0.000	0.000
1	4	X-CHEM-BUSAN112	5,864.00	7.60	Pounds	0.72%	7.22%	42.379	423.539
1	4	X-CHEM-WOODLIFE	21,769.00	6.60	Pounds	38.03%	0.00%	8,277.662	0.000
1	5	X-WD2403	26,143.20	9.10	Pounds	2.10%	0.01%	547.961	1.307
2	1	1197152	106.00	8.41	Gallons	0.29%	0.26%	2.585	2.318
2	1	1251644	21.00	8.49	Gallons	0.23%	0.00%	0.410	0.000
2	1	1251646	74.00	10.58	Gallons	0.52%	0.00%	4.071	0.000
2	1	2H850	12,000.00	8.60	Pounds	0.00%	0.00%	0.096	0.096
2	1	6R17D	3.00	8.86	Gallons	58.80%	3.00%	15.629	0.797
2	1	6W848	4.00	13.76	Gallons	32.20%	0.00%	17.723	0.000
2	1	6Y852	2.00	10.67	Gallons	53.00%	0.00%	11.310	0.000
2	1	DOWANOLETHER	66.40	7.36	Gallons	100.00%	0.00%	488.704	0.000
2	1	EEP	10.00	7.91	Gallons	100.00%	0.00%	79.100	0.000
2	1	M768PEL	1,400.00	7.25	Pounds	0.00%	0.00%	0.000	0.000
2	1	PA310	9,600.00	8.40	Pounds	0.00%	0.00%	0.000	0.000
2	1	S61Y504	1.00	8.50	Gallons	70.00%	0.00%	5.950	0.000

Month	Bld	Woodgrain Item Number	Quantity Used	Weight	Unit of Measure	% VOC by Weight	% HAPs by Weight	Pounds VOC	Pounds HAPs
2	1	T82B2751	1.00	7.80	Gallons	74.00%	0.00%	5.772	0.000
2	1	T82CH5	4.00	8.20	Gallons	53.40%	1.20%	17.515	0.394
2	1	T82R2752	1.00	7.03	Gallons	89.50%	1.00%	6.292	0.070
2	1	T82R2754	1.00	9.35	Gallons	61.90%	0.00%	5.788	0.000
2	1	T82W2756	1.00	11.60	Gallons	41.00%	0.00%	4.756	0.000
2	2	01031	2,860.00	7.04	Gallons	100.00%	0.00%	20,140.120	0.000
2	2	6R17D	12.00	8.86	Gallons	58.80%	3.00%	62.516	3.190
2	2	6W848	16.00	13.76	Gallons	32.20%	0.00%	70.892	0.000
2	2	6Y362	5.00	11.35	Gallons	50.00%	25.00%	28.375	14.188
2	2	6Y852	8.00	10.67	Gallons	53.00%	0.00%	45.241	0.000
2	2	7219	55.00	6.91	Gallons	72.00%	0.00%	273.636	0.000
2	2	A60W1	1.00	18.47	Gallons	10.00%	10.00%	1.847	1.847
2	2	DOWANOLETHER	265.60	7.36	Gallons	100.00%	0.00%	1,954.816	0.000
2	2	E60WL510	155.00	12.50	Gallons	0.98%	0.00%	18.968	0.000
2	2	EEP	40.00	7.91	Gallons	100.00%	0.00%	316.400	0.000
2	2	MAK	55.00	6.76	Gallons	100.00%	0.00%	371.800	0.000
2	2	OK412	25.00	16.40	Gallons	0.00%	0.00%	0.000	0.000
2	2	P63YL0002	300.00	8.82	Gallons	42.70%	3.50%	1,129.842	92.610
2	2	P65RH41	50.00	8.09	Gallons	51.50%	0.00%	208.318	0.000
2	2	P65RL0001	203.00	7.82	Gallons	58.70%	4.20%	931.839	66.673
2	2	P65WL0004	1,500.00	8.72	Gallons	50.60%	5.20%	6,618.480	680.160
2	2	P65XX001	600.00	8.41	Gallons	42.60%	3.20%	2,149.596	161.472
2	2	P65YH49	53.00	8.10	Gallons	52.20%	0.00%	224.095	0.000
2	2	P65YL0001	1,001.00	8.05	Gallons	56.40%	4.20%	4,544.740	338.438
2	2	T67F6	371.00	7.37	Gallons	26.70%	0.00%	730.050	0.000
2	2	T75XXF001-25	50.00	7.39	Gallons	79.00%	10.20%	291.905	37.689

Month	Bld	Woodgrain Item Number	Quantity Used	Weight	Unit of Measure	% VOC by Weight	% HAPs by Weight	Pounds VOC	Pounds HAPs
2	2	T82B2751	4.00	7.80	Gallons	74.00%	0.00%	23.088	0.000
2	2	T82CH5	16.00	8.20	Gallons	53.40%	1.20%	70.061	1.574
2	2	T82R2752	4.00	7.03	Gallons	89.50%	1.00%	25.167	0.281
2	2	T82R2754	4.00	9.35	Gallons	61.90%	0.00%	23.151	0.000
2	2	T82W2756	4.00	11.60	Gallons	41.00%	0.00%	19.024	0.000
2	2	T82Y2753	10.00	8.32	Gallons	53.50%	0.10%	44.512	0.083
2	3	E60WV504	18,097.00	12.69	Pounds	1.00%	0.00%	180.970	0.000
2	3	X-PAI-E60WL517	11,800.00	12.00	Pounds	1.70%	0.00%	200.600	0.000
2	3	X-PAI-WHITE ACRY	5,720.00	14.03	Pounds	0.30%	0.00%	17.160	0.000
2	4	X-C100Y	350.00	10.60	Pounds	0.00%	0.00%	0.000	0.000
2	4	X-CHEM-BUSAN112	2,462.00	7.60	Pounds	0.72%	7.22%	17.793	177.823
2	4	X-CHEM-EXXSOL D	12,603.00	6.45	Pounds	39.07%	0.00%	4,923.992	0.025
2	4	X-CHEM-WOODLIFE	35,910.00	6.60	Pounds	38.03%	0.00%	13,654.778	0.000
2	5	X-WD2403	21,192.80	9.10	Pounds	2.10%	0.01%	444.201	1.060
3	1	108R9	2.00	8.10	Gallons	60.00%	0.00%	9.720	0.000
3	1	1197152	4.00	8.41	Gallons	0.29%	0.26%	0.098	0.087
3	1	1251644	19.00	8.49	Gallons	0.23%	0.00%	0.371	0.000
3	1	1251646	55.00	10.58	Gallons	0.52%	0.00%	3.026	0.000
3	1	2H850	16,000.00	8.60	Pounds	0.00%	0.00%	0.128	0.128
3	1	6B849	3.00	8.82	Gallons	58.84%	0.00%	15.569	0.000
3	1	6R17D	5.20	8.86	Gallons	58.80%	3.00%	27.090	1.382
3	1	6W848	4.00	13.76	Gallons	32.20%	0.00%	17.723	0.000
3	1	6Y852	7.00	10.67	Gallons	53.00%	0.00%	39.586	0.000
3	1	ACETONE	10.80	6.60	Gallons	100.00%	0.00%	71.280	0.000
3	1	DOWANOLETHER	10.80	7.36	Gallons	100.00%	0.00%	79.488	0.000
3	1	EEP	17.00	7.91	Gallons	100.00%	0.00%	134.470	0.000

Month	Bld	Woodgrain Item Number	Quantity Used	Weight	Unit of Measure	% VOC by Weight	% HAPs by Weight	Pounds VOC	Pounds HAPs
3	1	M768PEL	4,200.00	7.25	Pounds	0.00%	0.00%	0.000	0.000
3	1	NBUTYLACETATE	33.00	7.31	Gallons	100.00%	0.00%	241.230	0.000
3	1	PA310	7,200.00	8.40	Pounds	0.00%	0.00%	0.000	0.000
3	1	T75CH46	31.80	7.71	Gallons	67.60%	0.00%	165.740	0.000
3	1	T82B2751	1.00	7.80	Gallons	74.00%	0.00%	5.772	0.000
3	1	T82R2754	1.00	9.35	Gallons	61.90%	0.00%	5.788	0.000
3	2	01031	770.00	7.04	Gallons	100.00%	0.00%	5,422.340	0.000
3	2	108R8	55.00	8.20	Gallons	69.00%	40.00%	311.190	180.400
3	2	108R9	8.00	8.10	Gallons	60.00%	0.00%	38.880	0.000
3	2	6B849	12.00	8.82	Gallons	58.84%	0.00%	62.276	0.000
3	2	6R17D	20.80	8.86	Gallons	58.80%	3.00%	108.361	5.529
3	2	6W848	16.00	13.76	Gallons	32.20%	0.00%	70.892	0.000
3	2	6Y362	5.00	11.35	Gallons	50.00%	25.00%	28.375	14.188
3	2	6Y852	28.00	10.67	Gallons	53.00%	0.00%	158.343	0.000
3	2	7219	55.00	6.91	Gallons	72.00%	0.00%	273.636	0.000
3	2	804SW	5.00	7.47	Gallons	0.00%	0.00%	0.000	0.000
3	2	A60B1	1.00	11.24	Gallons	24.00%	24.00%	2.698	2.698
3	2	ACETONE	43.20	6.60	Gallons	100.00%	0.00%	285.120	0.000
3	2	CHE-DAP	0.24	18.43	Gallons	0.00%	0.00%	0.000	0.000
3	2	CHE-DAP	0.32	18.43	Gallons	0.00%	0.00%	0.000	0.000
3	2	DOWANOLETHER	43.20	7.36	Gallons	100.00%	0.00%	317.952	0.000
3	2	E60WL510	400.00	12.50	Gallons	0.98%	0.00%	48.950	0.000
3	2	EEP	68.00	7.91	Gallons	100.00%	0.00%	537.880	0.000
3	2	MAK	15.00	6.76	Gallons	100.00%	0.00%	101.400	0.000
3	2	NBUTYLACETATE	132.00	7.31	Gallons	100.00%	0.00%	964.920	0.000
3	2	P63YL0002	1,556.00	8.82	Gallons	42.70%	3.50%	5,860.114	480.337

Month	Bld	Woodgrain Item Number	Quantity Used	Weight	Unit of Measure	% VOC by Weight	% HAPs by Weight	Pounds VOC	Pounds HAPs
3	2	P65RH39	105.00	7.70	Gallons	74.20%	31.20%	599.907	252.252
3	2	P65RL0001	215.00	7.82	Gallons	58.70%	4.20%	986.923	70.615
3	2	P65WL0004	2,072.00	8.72	Gallons	50.60%	5.20%	9,142.327	939.528
3	2	P65XX001	600.00	8.41	Gallons	42.60%	3.20%	2,149.596	161.472
3	2	T67F6	159.00	7.37	Gallons	26.70%	0.00%	312.879	0.000
3	2	T75CH46	127.20	7.71	Gallons	67.60%	0.00%	662.961	0.000
3	2	T75XXF001-25	5.00	7.39	Gallons	79.00%	10.20%	29.191	3.769
3	2	T82B2751	4.00	7.80	Gallons	74.00%	0.00%	23.088	0.000
3	2	T82R2754	4.00	9.35	Gallons	61.90%	0.00%	23.151	0.000
3	2	T82Y2753	5.00	8.32	Gallons	53.50%	0.10%	22.256	0.042
3	2	X-PAI-10531	2,997.00	8.33	Pounds	2.00%	0.00%	59.940	0.000
3	3	E60WV504	1,778.00	12.69	Pounds	1.00%	0.00%	17.780	0.000
3	3	X-PAI-E60WL517	15,367.00	12.00	Pounds	1.70%	0.00%	261.239	0.000
3	4	X-C100Y	488.00	10.60	Pounds	0.00%	0.00%	0.000	0.000
3	4	X-CHEM-BUSAN112	8,094.00	7.60	Pounds	0.72%	7.22%	58.495	584.605
3	4	X-CHEM-EXXSOL D	41,420.00	6.45	Pounds	39.07%	0.00%	16,182.794	0.083
3	5	X-WD2403	28,392.00	9.10	Pounds	2.10%	0.01%	595.096	1.420
4	1	108R9	1.00	8.10	Gallons	60.00%	0.00%	4.860	0.000
4	1	1197152	15.00	8.41	Gallons	0.29%	0.26%	0.366	0.328
4	1	1251644	20.00	8.49	Gallons	0.23%	0.00%	0.391	0.000
4	1	1251646	49.00	10.58	Gallons	0.52%	0.00%	2.696	0.000
4	1	1253194	1.00	8.33	Gallons	1.48%	0.00%	0.123	0.000
4	1	2H850	10,000.00	8.60	Pounds	0.00%	0.00%	0.080	0.080
4	1	6B849	1.00	8.82	Gallons	58.84%	0.00%	5.190	0.000
4	1	6N371	2.00	9.85	Gallons	50.39%	0.00%	9.927	0.000
4	1	6R17D	3.00	8.86	Gallons	58.80%	3.00%	15.629	0.797

Month	Bld	Woodgrain Item Number	Quantity Used	Weight	Unit of Measure	% VOC by Weight	% HAPs by Weight	Pounds VOC	Pounds HAPs
4	1	6W848	2.00	13.76	Gallons	32.20%	0.00%	8.861	0.000
4	1	6Y852	4.00	10.67	Gallons	53.00%	0.00%	22.620	0.000
4	1	ACETONE	21.60	6.60	Gallons	100.00%	0.00%	142.560	0.000
4	1	DOWANOLETHER	10.80	7.36	Gallons	100.00%	0.00%	79.488	0.000
4	1	EEP	24.00	7.91	Gallons	100.00%	0.00%	189.840	0.000
4	1	M768PEL	1,400.00	7.25	Pounds	0.00%	0.00%	0.000	0.000
4	1	NBUTYLACETATE	33.00	7.31	Gallons	100.00%	0.00%	241.230	0.000
4	1	PA285	430.00	9.07	Pounds	0.00%	0.00%	0.000	0.000
4	1	PA310	4,800.00	8.40	Pounds	0.00%	0.00%	0.000	0.000
4	1	S61B500	2.00	8.99	Gallons	73.00%	0.00%	13.125	0.000
4	1	S61Y504	1.00	8.50	Gallons	70.00%	0.00%	5.950	0.000
4	1	T75CH46	40.40	7.71	Gallons	67.60%	0.00%	210.563	0.000
4	2	01031	1,870.00	7.04	Gallons	100.00%	0.00%	13,168.540	0.000
4	2	108B2	55.00	7.80	Gallons	60.50%	33.70%	259.545	144.573
4	2	108R8	55.00	8.20	Gallons	69.00%	40.00%	311.190	180.400
4	2	108R9	4.00	8.10	Gallons	60.00%	0.00%	19.440	0.000
4	2	6B849	4.00	8.82	Gallons	58.84%	0.00%	20.759	0.000
4	2	6N371	8.00	9.85	Gallons	50.39%	0.00%	39.707	0.000
4	2	6R17D	12.00	8.86	Gallons	58.80%	3.00%	62.516	3.190
4	2	6W848	8.00	13.76	Gallons	32.20%	0.00%	35.446	0.000
4	2	6Y362	15.00	11.35	Gallons	50.00%	25.00%	85.125	42.563
4	2	6Y852	16.00	10.67	Gallons	53.00%	0.00%	90.482	0.000
4	2	7219	55.00	6.91	Gallons	72.00%	0.00%	273.636	0.000
4	2	804SW	5.00	7.47	Gallons	0.00%	0.00%	0.000	0.000
4	2	808572	1,800.00	8.90	Pounds	0.10%	0.10%	1.800	1.800
4	2	ACETONE	86.40	6.60	Gallons	100.00%	0.00%	570.240	0.000

Month	Bld	Woodgrain Item Number	Quantity Used	Weight	Unit of Measure	% VOC by Weight	% HAPs by Weight	Pounds VOC	Pounds HAPs
4	2	DOWANOLETHER	43.20	7.36	Gallons	100.00%	0.00%	317.952	0.000
4	2	E60WL510	265.00	12.50	Gallons	0.98%	0.00%	32.429	0.000
4	2	EEP	96.00	7.91	Gallons	100.00%	0.00%	759.360	0.000
4	2	MAK	85.00	6.76	Gallons	100.00%	0.00%	574.600	0.000
4	2	NBUTYLACETATE	132.00	7.31	Gallons	100.00%	0.00%	964.920	0.000
4	2	P63YL0002	597.00	8.82	Gallons	42.70%	3.50%	2,248.386	184.294
4	2	P65BH37	100.00	7.91	Gallons	56.40%	0.00%	446.124	0.000
4	2	P65RH41	150.00	8.09	Gallons	51.50%	0.00%	624.953	0.000
4	2	P65RL0001	345.00	7.82	Gallons	58.70%	4.20%	1,583.667	113.312
4	2	P65WL0004	2,280.00	8.72	Gallons	50.60%	5.20%	10,060.090	1033.843
4	2	P65XX001	400.00	8.41	Gallons	42.60%	3.20%	1,433.064	107.648
4	2	P65YL0001	550.00	8.05	Gallons	56.40%	4.20%	2,497.110	185.955
4	2	P65YL2	53.00	7.82	Gallons	52.30%	5.20%	216.763	21.552
4	2	T67F6	212.00	7.37	Gallons	26.70%	0.00%	417.171	0.000
4	2	T75CH46	161.60	7.71	Gallons	67.60%	0.00%	842.253	0.000
4	2	X-PAI-10531	3,046.00	8.33	Pounds	2.00%	0.00%	60.920	0.000
4	3	E60WV504	23,812.00	12.69	Pounds	1.00%	0.00%	238.120	0.000
4	3	X-PAI-E60WL517	13,017.00	12.00	Pounds	1.70%	0.00%	221.289	0.000
4	4	X-C100Y	37.00	10.60	Pounds	0.00%	0.00%	0.000	0.000
4	4	X-CHEM-BUSAN112	8,261.00	7.60	Pounds	0.72%	7.22%	59.701	596.666
4	4	X-CHEM-EXXSOL D	42,262.00	6.45	Pounds	39.07%	0.00%	16,511.763	0.085
4	5	X-WD2403	23,075.20	9.10	Pounds	2.10%	0.01%	483.656	1.154
5	1	1251644	10.00	8.49	Gallons	0.23%	0.00%	0.195	0.000
5	1	1251646	18.00	10.58	Gallons	0.52%	0.00%	0.990	0.000
5	1	2H850	10,000.00	8.60	Pounds	0.00%	0.00%	0.080	0.080
5	1	6B849	3.00	8.82	Gallons	58.84%	0.00%	15.569	0.000

Month	Bld	Woodgrain Item Number	Quantity Used	Weight	Unit of Measure	% VOC by Weight	% HAPs by Weight	Pounds VOC	Pounds HAPs
5	1	6N371	1.00	9.85	Gallons	50.39%	0.00%	4.963	0.000
5	1	6R17D	1.00	8.86	Gallons	58.80%	3.00%	5.210	0.266
5	1	6W848	3.00	13.76	Gallons	32.20%	0.00%	13.292	0.000
5	1	6Y405D	3.00	8.09	Gallons	70.00%	3.00%	16.989	0.728
5	1	6Y852	1.00	10.67	Gallons	53.00%	0.00%	5.655	0.000
5	1	ACETONE	10.80	6.60	Gallons	100.00%	0.00%	71.280	0.000
5	1	EEP	22.00	7.91	Gallons	100.00%	0.00%	174.020	0.000
5	1	M768PEL	4,200.00	7.25	Pounds	0.00%	0.00%	0.000	0.000
5	1	NBUTYLACETATE	22.00	7.31	Gallons	100.00%	0.00%	160.820	0.000
5	1	PA310	4,800.00	8.40	Pounds	0.00%	0.00%	0.000	0.000
5	1	S61B500	2.00	8.99	Gallons	73.00%	0.00%	13.125	0.000
5	1	S61Y504	2.00	8.50	Gallons	70.00%	0.00%	11.900	0.000
5	1	T75CH46	21.20	7.71	Gallons	67.60%	0.00%	110.494	0.000
5	2	01031	1,540.00	7.04	Gallons	100.00%	0.00%	10,844.680	0.000
5	2	6B849	12.00	8.82	Gallons	58.84%	0.00%	62.276	0.000
5	2	6N371	4.00	9.85	Gallons	50.39%	0.00%	19.854	0.000
5	2	6R17D	4.00	8.86	Gallons	58.80%	3.00%	20.839	1.063
5	2	6W848	12.00	13.76	Gallons	32.20%	0.00%	53.169	0.000
5	2	6Y405D	12.00	8.09	Gallons	70.00%	3.00%	67.956	2.912
5	2	6Y852	4.00	10.67	Gallons	53.00%	0.00%	22.620	0.000
5	2	ACETONE	43.20	6.60	Gallons	100.00%	0.00%	285.120	0.000
5	2	CHE-DAP	0.24	18.43	Gallons	0.00%	0.00%	0.000	0.000
5	2	E60WL510	174.00	12.50	Gallons	0.98%	0.00%	21.293	0.000
5	2	EEP	88.00	7.91	Gallons	100.00%	0.00%	696.080	0.000
5	2	M64WL505	5.00	10.55	Gallons	3.30%	0.00%	1.741	0.000
5	2	MAK	5.00	6.76	Gallons	100.00%	0.00%	33.800	0.000

Month	Bld	Woodgrain Item Number	Quantity Used	Weight	Unit of Measure	% VOC by Weight	% HAPs by Weight	Pounds VOC	Pounds HAPs
5	2	NBUTYLACETATE	88.00	7.31	Gallons	100.00%	0.00%	643.280	0.000
5	2	OK412	25.00	16.40	Gallons	0.00%	0.00%	0.000	0.000
5	2	P63YL0002	885.00	8.82	Gallons	42.70%	3.50%	3,333.034	273.200
5	2	P65BL1	53.00	7.64	Gallons	57.50%	5.20%	232.829	21.056
5	2	P65RL0001	318.00	7.82	Gallons	58.70%	4.20%	1,459.728	104.444
5	2	P65WL0004	1,467.00	8.72	Gallons	50.60%	5.20%	6,472.873	665.196
5	2	P65YL0001	657.00	8.05	Gallons	56.40%	4.20%	2,982.911	222.132
5	2	P65YL2	74.00	7.82	Gallons	52.30%	5.20%	302.650	30.091
5	2	T67F6	106.00	7.37	Gallons	26.70%	0.00%	208.586	0.000
5	2	T75CH46	84.80	7.71	Gallons	67.60%	0.00%	441.974	0.000
5	3	10532	5,270.00	11.50	Pounds	1.00%	0.00%	52.700	0.000
5	3	E60WV504	29,210.00	12.69	Pounds	1.00%	0.00%	292.100	0.000
5	3	X-PAI-10505	7,607.00	14.25	Pounds	2.00%	0.00%	152.140	0.000
5	3	X-PAI-E60WL517	13,017.00	12.00	Pounds	1.70%	0.00%	221.289	0.000
5	4	X-C100Y	318.00	10.60	Pounds	0.00%	0.00%	0.000	0.000
5	4	X-CHEM-BUSAN112	7,030.00	7.60	Pounds	0.72%	7.22%	50.805	507.755
5	4	X-CHEM-EXXSOL D	35,983.00	6.45	Pounds	39.07%	0.00%	14,058.558	0.072
5	5	X-WD2403	19,624.00	9.10	Pounds	2.10%	0.01%	411.319	0.981
6	1	2H850	14,000.00	8.60	Pounds	0.00%	0.00%	0.112	0.112
6	1	6B849	3.00	8.82	Gallons	58.84%	0.00%	15.569	0.000
6	1	6R850	3.00	12.44	Gallons	40.67%	0.00%	15.178	0.000
6	1	6Y852	2.00	10.67	Gallons	53.00%	0.00%	11.310	0.000
6	1	ACETONE	10.80	6.60	Gallons	100.00%	0.00%	71.280	0.000
6	1	EEP	22.00	7.91	Gallons	100.00%	0.00%	174.020	0.000
6	1	M768PEL	4,200.00	7.25	Pounds	0.00%	0.00%	0.000	0.000
6	1	NBUTYLACETATE	55.00	7.31	Gallons	100.00%	0.00%	402.050	0.000

Month	Bld	Woodgrain Item Number	Quantity Used	Weight	Unit of Measure	% VOC by Weight	% HAPs by Weight	Pounds VOC	Pounds HAPs
6	1	PA310	9,600.00	8.40	Pounds	0.00%	0.00%	0.000	0.000
6	1	T75CH46	44.80	7.71	Gallons	67.60%	0.00%	233.496	0.000
6	2	01031	1,485.00	7.04	Gallons	100.00%	0.00%	10,457.370	0.000
6	2	6B849	12.00	8.82	Gallons	58.84%	0.00%	62.276	0.000
6	2	6R850	12.00	12.44	Gallons	40.67%	0.00%	60.712	0.000
6	2	6Y852	8.00	10.67	Gallons	53.00%	0.00%	45.241	0.000
6	2	7219	53.00	6.91	Gallons	72.00%	0.00%	263.686	0.000
6	2	ACETONE	43.20	6.60	Gallons	100.00%	0.00%	285.120	0.000
6	2	CHE-DAP	0.08	18.43	Gallons	0.00%	0.00%	0.000	0.000
6	2	E60WL510	365.00	12.50	Gallons	0.98%	0.00%	44.667	0.000
6	2	EEP	88.00	7.91	Gallons	100.00%	0.00%	696.080	0.000
6	2	LKF017840	55.00	8.58	Gallons	8.50%	1.80%	40.112	8.494
6	2	NBUTYLACETATE	220.00	7.31	Gallons	100.00%	0.00%	1,608.200	0.000
6	2	P63YL0002	1,050.00	8.82	Gallons	42.70%	3.50%	3,954.447	324.135
6	2	P65BL1	53.00	7.64	Gallons	57.50%	5.20%	232.829	21.056
6	2	P65RL0001	318.00	7.82	Gallons	58.70%	4.20%	1,459.728	104.444
6	2	P65WL0004	2,100.00	8.72	Gallons	50.60%	5.20%	9,265.872	952.224
6	2	P65YL0001	900.00	8.05	Gallons	56.40%	4.20%	4,086.180	304.290
6	2	T67F6	265.00	7.37	Gallons	26.70%	0.00%	521.464	0.000
6	2	T75CH46	179.20	7.71	Gallons	67.60%	0.00%	933.983	0.000
6	3	E60WV504	31,813.00	12.69	Pounds	1.00%	0.00%	318.130	0.000
6	3	X-PAI-10505	3,429.00	14.25	Pounds	2.00%	0.00%	68.580	0.000
6	4	X-C100Y	339.00	10.60	Pounds	0.00%	0.00%	0.000	0.000
6	4	X-CHEM-BUSAN112	13,376.00	7.60	Pounds	0.72%	7.22%	96.667	966.107
6	4	X-CHEM-EXXSOL D	68,435.00	6.45	Pounds	39.07%	0.00%	26,737.555	0.137
6	5	X-WD2403	28,210.40	9.10	Pounds	2.10%	0.01%	591.290	1.411

Month	Bld	Woodgrain Item Number	Quantity Used	Weight	Unit of Measure	% VOC by Weight	% HAPs by Weight	Pounds VOC	Pounds HAPs
7	1	1225258	1.00	8.66	Gallons	0.80%	0.00%	0.069	0.000
7	1	1251644	17.00	8.49	Gallons	0.23%	0.00%	0.332	0.000
7	1	1251646	49.00	10.58	Gallons	0.52%	0.00%	2.696	0.000
7	1	1253194	1.00	8.33	Gallons	1.48%	0.00%	0.123	0.000
7	1	2H850	13,000.00	8.60	Pounds	0.00%	0.00%	0.104	0.104
7	1	5S775D	1.00	8.33	Gallons	59.20%	0.00%	4.931	0.000
7	1	6R850	3.00	12.44	Gallons	40.67%	0.00%	15.178	0.000
7	1	6W848	3.00	13.76	Gallons	32.20%	0.00%	13.292	0.000
7	1	6Y405D	5.00	8.09	Gallons	70.00%	3.00%	28.315	1.214
7	1	6Y852	7.00	10.67	Gallons	53.00%	0.00%	39.586	0.000
7	1	ACETONE	76.00	6.60	Gallons	100.00%	0.00%	501.600	0.000
7	1	EEP	56.00	7.91	Gallons	100.00%	0.00%	442.960	0.000
7	1	M768PEL	1,400.00	7.25	Pounds	0.00%	0.00%	0.000	0.000
7	1	NBUTYLACETATE	66.00	7.31	Gallons	100.00%	0.00%	482.460	0.000
7	1	PA285	400.00	9.07	Pounds	0.00%	0.00%	0.000	0.000
7	1	PA310	7,200.00	8.40	Pounds	0.00%	0.00%	0.000	0.000
7	1	S61B500	1.00	8.99	Gallons	73.00%	0.00%	6.563	0.000
7	1	S61E501	3.00	8.65	Gallons	80.00%	0.00%	20.760	0.000
7	1	S61L505	1.00	8.35	Gallons	69.90%	0.00%	5.837	0.000
7	1	S61R503	2.00	8.70	Gallons	70.00%	0.00%	12.180	0.000
7	1	S61Y504	7.00	8.50	Gallons	70.00%	0.00%	41.650	0.000
7	1	T75CH46	31.80	7.71	Gallons	67.60%	0.00%	165.740	0.000
7	2	01031	2,750.00	7.04	Gallons	100.00%	0.00%	19,365.500	0.000
7	2	5S775D	4.00	8.33	Gallons	59.20%	0.00%	19.725	0.000
7	2	6R850	12.00	12.44	Gallons	40.67%	0.00%	60.712	0.000
7	2	6W848	12.00	13.76	Gallons	32.20%	0.00%	53.169	0.000

Month	Bld	Woodgrain Item Number	Quantity Used	Weight	Unit of Measure	% VOC by Weight	% HAPs by Weight	Pounds VOC	Pounds HAPs
7	2	6Y405D	20.00	8.09	Gallons	70.00%	3.00%	113.260	4.854
7	2	6Y852	28.00	10.67	Gallons	53.00%	0.00%	158.343	0.000
7	2	7219	55.00	6.91	Gallons	72.00%	0.00%	273.636	0.000
7	2	A60B1	1.00	11.24	Gallons	24.00%	24.00%	2.698	2.698
7	2	A60Y3	2.00	14.76	Gallons	0.00%	0.00%	0.000	0.000
7	2	ACETONE	304.00	6.60	Gallons	100.00%	0.00%	2,006.400	0.000
7	2	E60WL510	206.00	12.50	Gallons	0.98%	0.00%	25.209	0.000
7	2	EEP	224.00	7.91	Gallons	100.00%	0.00%	1,771.840	0.000
7	2	M64RL500	5.00	8.91	Gallons	3.30%	0.00%	1.470	0.000
7	2	M64W501	15.00	9.13	Gallons	6.40%	0.00%	8.765	0.000
7	2	M64YL500	5.00	9.29	Gallons	3.00%	0.00%	1.394	0.000
7	2	MAK	10.00	6.76	Gallons	100.00%	0.00%	67.600	0.000
7	2	NBUTYLACETATE	264.00	7.31	Gallons	100.00%	0.00%	1,929.840	0.000
7	2	OK412	25.00	16.40	Gallons	0.00%	0.00%	0.000	0.000
7	2	P63YL0002	1,050.00	8.82	Gallons	42.70%	3.50%	3,954.447	324.135
7	2	P65BL1	53.00	7.64	Gallons	57.50%	5.20%	232.829	21.056
7	2	P65RL0001	371.00	7.82	Gallons	58.70%	4.20%	1,703.016	121.851
7	2	P65WL0004	1,500.00	8.72	Gallons	50.60%	5.20%	6,618.480	680.160
7	2	P65YL0001	914.00	8.05	Gallons	56.40%	4.20%	4,149.743	309.023
7	2	T75CH46	127.20	7.71	Gallons	67.60%	0.00%	662.961	0.000
7	3	E60WV504	18,097.00	12.69	Pounds	1.00%	0.00%	180.970	0.000
7	4	X-C100Y	233.00	10.60	Pounds	0.00%	0.00%	0.000	0.000
7	4	X-CHEM-BUSAN112	8,876.00	7.60	Pounds	0.72%	7.22%	64.146	641.086
7	4	X-CHEM-EXXSOL D	43,558.00	6.45	Pounds	39.07%	0.00%	17,018.111	0.087
7	5	X-WD2403	20,202.40	9.10	Pounds	2.10%	0.01%	423.442	1.010
8	2	M64RL500	5.00	8.91	Gallons	3.30%	0.00%	1.470	0.000

Month	Bld	Woodgrain Item Number	Quantity Used	Weight	Unit of Measure	% VOC by Weight	% HAPs by Weight	Pounds VOC	Pounds HAPs
8	2	M64W501	15.00	9.13	Gallons	6.40%	0.00%	8.765	0.000
8	2	M64YL500	5.00	9.29	Gallons	3.00%	0.00%	1.394	0.000
8	2	P63YL0002	1,050.00	8.82	Gallons	42.70%	3.50%	3,954.447	324.135
8	2	P65BL1	53.00	7.64	Gallons	57.50%	5.20%	232.829	21.056
8	2	P65RL0001	371.00	7.82	Gallons	58.70%	4.20%	1,703.016	121.851
8	2	P65WL0004	1,500.00	8.72	Gallons	50.60%	5.20%	6,618.480	680.160
8	2	P65YL0001	914.00	8.05	Gallons	56.40%	4.20%	4,149.743	309.023
8	3	E60WV504	18,097.00	12.69	Pounds	1.00%	0.00%	180.970	0.000
8	4	X-C100Y	276.00	10.60	Pounds	0.00%	0.00%	0.000	0.000
8	4	X-CHEM-BUSAN112	8,344.00	7.60	Pounds	0.72%	7.22%	60.301	602.661
8	4	X-CHEM-EXXSOL D	41,912.00	6.45	Pounds	39.07%	0.00%	16,375.018	0.084
8	5	X-WD2403	18,535.20	9.10	Pounds	2.10%	0.01%	388.498	0.927
9	1	1200704	3.00	8.74	Gallons	0.54%	0.00%	0.142	0.000
9	1	1251644	32.00	8.49	Gallons	0.23%	0.00%	0.625	0.000
9	1	1251646	56.00	10.58	Gallons	0.52%	0.00%	3.081	0.000
9	1	2H850	19,000.00	8.60	Pounds	0.00%	0.00%	0.152	0.152
9	1	6B849	1.00	8.82	Gallons	58.84%	0.00%	5.190	0.000
9	1	6R17D	4.00	8.86	Gallons	58.80%	3.00%	20.839	1.063
9	1	6R850	3.00	12.44	Gallons	40.67%	0.00%	15.178	0.000
9	1	6W848	1.00	13.76	Gallons	32.20%	0.00%	4.431	0.000
9	1	6Y405D	3.00	8.09	Gallons	70.00%	3.00%	16.989	0.728
9	1	ACETONE	21.40	6.60	Gallons	100.00%	0.00%	141.240	0.000
9	1	EEP	40.00	7.91	Gallons	100.00%	0.00%	316.400	0.000
9	1	M768PEL	4,200.00	7.25	Pounds	0.00%	0.00%	0.000	0.000
9	1	NBUTYLACETATE	99.00	7.31	Gallons	100.00%	0.00%	723.690	0.000
9	1	PA285	1,075.00	9.07	Pounds	0.00%	0.00%	0.000	0.000

Month	Bld	Woodgrain Item Number	Quantity Used	Weight	Unit of Measure	% VOC by Weight	% HAPs by Weight	Pounds VOC	Pounds HAPs
9	1	PA310	9,600.00	8.40	Pounds	0.00%	0.00%	0.000	0.000
9	1	S61B500	11.00	8.99	Gallons	73.00%	0.00%	72.190	0.000
9	1	S61R503	3.00	8.70	Gallons	70.00%	0.00%	18.270	0.000
9	1	S61R506	6.00	8.59	Gallons	79.98%	0.00%	41.222	0.000
9	1	S61Y504	14.00	8.50	Gallons	70.00%	0.00%	83.300	0.000
9	1	T75CH46	74.20	7.71	Gallons	67.60%	0.00%	386.727	0.000
9	2	01031	990.00	7.04	Gallons	100.00%	0.00%	6,971.580	0.000
9	2	6B849	4.00	8.82	Gallons	58.84%	0.00%	20.759	0.000
9	2	6R17D	16.00	8.86	Gallons	58.80%	3.00%	83.355	4.253
9	2	6R850	12.00	12.44	Gallons	40.67%	0.00%	60.712	0.000
9	2	6W848	4.00	13.76	Gallons	32.20%	0.00%	17.723	0.000
9	2	6Y405D	12.00	8.09	Gallons	70.00%	3.00%	67.956	2.912
9	2	804SW	10.00	7.47	Gallons	0.00%	0.00%	0.000	0.000
9	2	ACETONE	85.60	6.60	Gallons	100.00%	0.00%	564.960	0.000
9	2	CHE-DAP	0.08	18.43	Gallons	0.00%	0.00%	0.000	0.000
9	2	E60WL510	250.00	12.50	Gallons	0.98%	0.00%	30.594	0.000
9	2	E60YL502	314.00	12.15	Gallons	0.98%	0.00%	37.388	0.000
9	2	EEP	160.00	7.91	Gallons	100.00%	0.00%	1,265.600	0.000
9	2	M64RL500	5.00	8.91	Gallons	3.30%	0.00%	1.470	0.000
9	2	M64YL500	5.00	9.29	Gallons	3.00%	0.00%	1.394	0.000
9	2	NBUTYLACETATE	396.00	7.31	Gallons	100.00%	0.00%	2,894.760	0.000
9	2	OK412	25.00	16.40	Gallons	0.00%	0.00%	0.000	0.000
9	2	P65BL1	106.00	7.64	Gallons	57.50%	5.20%	465.658	42.112
9	2	P65RH39	55.00	7.70	Gallons	74.20%	31.20%	314.237	132.132
9	2	P65RL0001	371.00	7.82	Gallons	58.70%	4.20%	1,703.016	121.851
9	2	P65WL0004	2,703.00	8.72	Gallons	50.60%	5.20%	11,926.501	1225.648

Month	Bld	Woodgrain Item Number	Quantity Used	Weight	Unit of Measure	% VOC by Weight	% HAPs by Weight	Pounds VOC	Pounds HAPs
9	2	P65YL0001	1,064.00	8.05	Gallons	56.40%	4.20%	4,830.773	359.738
9	2	P65YL2	53.00	7.82	Gallons	52.30%	5.20%	216.763	21.552
9	2	T67F6	53.00	7.37	Gallons	26.70%	0.00%	104.293	0.000
9	2	T75CH46	296.80	7.71	Gallons	67.60%	0.00%	1,546.910	0.000
9	3	E60WV504	18,975.00	12.69	Pounds	1.00%	0.00%	189.750	0.000
9	4	X-C100Y	286.00	10.60	Pounds	0.00%	0.00%	0.000	0.000
9	4	X-CHEM-BUSAN112	10,260.00	7.60	Pounds	0.72%	7.22%	74.148	741.048
9	4	X-CHEM-EXXSOL D	58,378.00	6.45	Pounds	39.07%	0.00%	22,808.285	0.117
9	4	X-CHEM-TREWAX	6.00	8.33	Pounds	75.00%	0.00%	4.500	0.000
9	5	X-WD2403	21,804.00	9.10	Pounds	2.10%	0.01%	457.012	1.090
10	1	1200705	1.00	9.08	Gallons	0.00%	0.00%	0.000	0.000
10	1	1251644	17.00	8.49	Gallons	0.23%	0.00%	0.332	0.000
10	1	1251646	79.00	10.58	Gallons	0.52%	0.00%	4.346	0.000
10	1	2H850	15,300.00	8.60	Pounds	0.00%	0.00%	0.122	0.122
10	1	6R850	3.00	12.44	Gallons	40.67%	0.00%	15.178	0.000
10	1	6Y405D	4.00	8.09	Gallons	70.00%	3.00%	22.652	0.971
10	1	6Y852	6.00	10.67	Gallons	53.00%	0.00%	33.931	0.000
10	1	ACETONE	65.60	6.60	Gallons	100.00%	0.00%	432.960	0.000
10	1	M768PEL	4,575.00	7.25	Pounds	0.00%	0.00%	0.000	0.000
10	1	NBUTYLACETATE	22.00	7.31	Gallons	100.00%	0.00%	160.820	0.000
10	1	PA310	9,600.00	8.40	Pounds	0.00%	0.00%	0.000	0.000
10	1	T75CH46	21.20	7.71	Gallons	67.60%	0.00%	110.494	0.000
10	2	01031	1,760.00	7.04	Gallons	100.00%	0.00%	12,393.920	0.000
10	2	6R850	12.00	12.44	Gallons	40.67%	0.00%	60.712	0.000
10	2	6Y405D	16.00	8.09	Gallons	70.00%	3.00%	90.608	3.883
10	2	6Y852	24.00	10.67	Gallons	53.00%	0.00%	135.722	0.000

Month	Bld	Woodgrain Item Number	Quantity Used	Weight	Unit of Measure	% VOC by Weight	% HAPs by Weight	Pounds VOC	Pounds HAPs
10	2	7219	53.00	6.91	Gallons	72.00%	0.00%	263.686	0.000
10	2	ACETONE	262.40	6.60	Gallons	100.00%	0.00%	1,731.840	0.000
10	2	CHE-DAP	0.24	18.43	Gallons	0.00%	0.00%	0.000	0.000
10	2	E60WL510	150.00	12.50	Gallons	0.98%	0.00%	18.356	0.000
10	2	E60YL502	110.00	12.15	Gallons	0.98%	0.00%	13.098	0.000
10	2	NBUTYLACETATE	88.00	7.31	Gallons	100.00%	0.00%	643.280	0.000
10	2	P63YL0002	2,600.00	8.82	Gallons	42.70%	3.50%	9,791.964	802.620
10	2	P65RL0001	159.00	7.82	Gallons	58.70%	4.20%	729.864	52.222
10	2	P65WL0004	1,938.00	8.72	Gallons	50.60%	5.20%	8,551.076	878.767
10	2	P65YL0001	600.00	8.05	Gallons	56.40%	4.20%	2,724.120	202.860
10	2	T75CH46	84.80	7.71	Gallons	67.60%	0.00%	441.974	0.000
10	3	E60WV504	14,478.00	12.69	Pounds	1.00%	0.00%	144.780	0.000
10	4	X-C100Y	297.00	10.60	Pounds	0.00%	0.00%	0.000	0.000
10	4	X-CHEM-BUSAN112	5,791.00	7.60	Pounds	0.72%	7.22%	41.851	418.266
10	4	X-CHEM-CB	675.00	8.33	Gallons	1.00%	0.00%	56.228	0.000
10	4	X-CHEM-EXXSOL D	37,020.00	6.45	Pounds	39.07%	0.00%	14,463.714	0.074
10	5	X-WD2403	18,840.00	9.10	Pounds	2.10%	0.01%	394.886	0.942
11	1	1200705	1.00	9.08	Gallons	0.00%	0.00%	0.000	0.000
11	1	1251644	17.00	8.49	Gallons	0.23%	0.00%	0.332	0.000
11	1	1251646	79.00	10.58	Gallons	0.52%	0.00%	4.346	0.000
11	1	2H850	15,300.00	8.60	Pounds	0.00%	0.00%	0.122	0.122
11	1	6R850	3.00	12.44	Gallons	40.67%	0.00%	15.178	0.000
11	1	6Y405D	4.00	8.09	Gallons	70.00%	3.00%	22.652	0.971
11	1	6Y852	6.00	10.67	Gallons	53.00%	0.00%	33.931	0.000
11	1	ACETONE	65.60	6.60	Gallons	100.00%	0.00%	432.960	0.000
11	1	M768PEL	4,575.00	7.25	Pounds	0.00%	0.00%	0.000	0.000

Month	Bld	Woodgrain Item Number	Quantity Used	Weight	Unit of Measure	% VOC by Weight	% HAPs by Weight	Pounds VOC	Pounds HAPs
11	1	NBUTYLACETATE	22.00	7.31	Gallons	100.00%	0.00%	160.820	0.000
11	1	PA310	9,600.00	8.40	Pounds	0.00%	0.00%	0.000	0.000
11	1	T75CH46	21.20	7.71	Gallons	67.60%	0.00%	110.494	0.000
11	2	01031	1,760.00	7.04	Gallons	100.00%	0.00%	12,393.920	0.000
11	2	6R850	12.00	12.44	Gallons	40.67%	0.00%	60.712	0.000
11	2	6Y405D	16.00	8.09	Gallons	70.00%	3.00%	90.608	3.883
11	2	6Y852	24.00	10.67	Gallons	53.00%	0.00%	135.722	0.000
11	2	7219	53.00	6.91	Gallons	72.00%	0.00%	263.686	0.000
11	2	ACETONE	262.40	6.60	Gallons	100.00%	0.00%	1,731.840	0.000
11	2	E60WL510	150.00	12.50	Gallons	0.98%	0.00%	18.356	0.000
11	2	E60YL502	110.00	12.15	Gallons	0.98%	0.00%	13.098	0.000
11	2	NBUTYLACETATE	88.00	7.31	Gallons	100.00%	0.00%	643.280	0.000
11	2	P63YL0002	2,600.00	8.82	Gallons	42.70%	3.50%	9,791.964	802.620
11	2	P65RL0001	159.00	7.82	Gallons	58.70%	4.20%	729.864	52.222
11	2	P65WL0004	1,938.00	8.72	Gallons	50.60%	5.20%	8,551.076	878.767
11	2	P65YL0001	600.00	8.05	Gallons	56.40%	4.20%	2,724.120	202.860
11	2	T75CH46	84.80	7.71	Gallons	67.60%	0.00%	441.974	0.000
11	3	E60WV504	14,487.00	12.69	Pounds	1.00%	0.00%	144.870	0.000
11	4	X-C100Y	276.00	10.60	Pounds	0.00%	0.00%	0.000	0.000
11	4	X-CHEM-BUSAN112	4,415.00	7.60	Pounds	0.72%	7.22%	31.907	318.882
11	4	X-CHEM-EXXSOL D	30,119.00	6.45	Pounds	39.07%	0.00%	11,767.493	0.060
11	5	X-WD2403	19,110.40	9.10	Pounds	2.10%	0.01%	400.554	0.956
12	1	1251644	27.00	8.49	Gallons	0.23%	0.00%	0.527	0.000
12	1	1251646	53.00	10.58	Gallons	0.52%	0.00%	2.916	0.000
12	1	2H850	17,000.00	8.60	Pounds	0.00%	0.00%	0.136	0.136
12	1	6B849	1.00	8.82	Gallons	58.84%	0.00%	5.190	0.000

Month	Bld	Woodgrain Item Number	Quantity Used	Weight	Unit of Measure	% VOC by Weight	% HAPs by Weight	Pounds VOC	Pounds HAPs
12	1	ACETONE	10.80	6.60	Gallons	100.00%	0.00%	71.280	0.000
12	1	EEP	4.00	7.91	Gallons	100.00%	0.00%	31.640	0.000
12	1	M768PEL	4,200.00	7.25	Pounds	0.00%	0.00%	0.000	0.000
12	1	NBUTYLACETATE	11.00	7.31	Gallons	100.00%	0.00%	80.410	0.000
12	1	PA310	9,600.00	8.40	Pounds	0.00%	0.00%	0.000	0.000
12	1	T75CH46	31.80	7.71	Gallons	67.60%	0.00%	165.740	0.000
12	2	01031	1,576.00	7.04	Gallons	100.00%	0.00%	11,098.192	0.000
12	2	6B849	4.00	8.82	Gallons	58.84%	0.00%	20.759	0.000
12	2	7219	53.00	6.91	Gallons	72.00%	0.00%	263.686	0.000
12	2	ACETONE	43.20	6.60	Gallons	100.00%	0.00%	285.120	0.000
12	2	CHE-DAP	0.08	18.43	Gallons	0.00%	0.00%	0.000	0.000
12	2	E60WL510	112.00	12.50	Gallons	0.98%	0.00%	13.706	0.000
12	2	EEP	16.00	7.91	Gallons	100.00%	0.00%	126.560	0.000
12	2	NBUTYLACETATE	44.00	7.31	Gallons	100.00%	0.00%	321.640	0.000
12	2	OK412	50.00	16.40	Gallons	0.00%	0.00%	0.000	0.000
12	2	P63YL0002	276.00	8.82	Gallons	42.70%	3.50%	1,039.455	85.201
12	2	P65BL1	53.00	7.64	Gallons	57.50%	5.20%	232.829	21.056
12	2	P65RL0001	265.00	7.82	Gallons	58.70%	4.20%	1,216.440	87.037
12	2	P65WL0004	1,661.00	8.72	Gallons	50.60%	5.20%	7,328.864	753.164
12	2	P65YL0001	801.00	8.05	Gallons	56.40%	4.20%	3,636.700	270.818
12	2	T75CH46	127.20	7.71	Gallons	67.60%	0.00%	662.961	0.000
12	3	E60WV504	32,575.00	12.69	Pounds	1.00%	0.00%	325.750	0.000
12	4	X-C100Y	339.00	10.60	Pounds	0.00%	0.00%	0.000	0.000
12	4	X-CHEM-BUSAN112	6,026.00	7.60	Pounds	0.72%	7.22%	43.549	435.239
12	4	X-CHEM-EXXSOL D	46,267.00	6.45	Pounds	39.07%	0.00%	18,076.517	0.093
12	5	X-WD2403	26,586.40	9.10	Pounds	2.10%	0.01%	557.251	1.329

VOC/HAP Emission Details

Month	Bld	Woodgrain Item Number	Quantity Used	Weight	Unit of Measure	% VOC by Weight	% HAPs by Weight	Pounds VOC	Pounds HAPs
1	1	1197152	13.00	8.41	Gallons	0.29%	0.26%	0.317	0.284
1	1	1200704	1.00	8.74	Gallons	0.54%	0.00%	0.047	0.000
1	1	1200705	1.00	9.08	Gallons	0.00%	0.00%	0.000	0.000
1	1	1225258	1.00	8.66	Gallons	0.80%	0.00%	0.069	0.000
1	1	1229669	1.00	9.08	Gallons	0.63%	0.00%	0.057	0.000
1	1	1251644	5.00	8.49	Gallons	0.23%	0.00%	0.098	0.000
1	1	1251646	41.00	10.58	Gallons	0.52%	0.00%	2.256	0.000
1	1	1253194	1.00	8.33	Gallons	1.48%	0.00%	0.123	0.000
1	1	22110	2,790.00	7.90	Pounds	1.10%	0.00%	30.690	0.000
1	1	2H850	13,600.00	8.60	Pounds	0.00%	0.00%	0.109	0.109
1	1	6W848	1.00	13.76	Gallons	32.20%	0.00%	4.431	0.000
1	1	6Y405D	1.00	8.09	Gallons	70.00%	3.00%	5.663	0.243
1	1	6Y70D	0.20	8.29	Gallons	39.60%	0.00%	0.657	0.000
1	1	6Y852	1.00	10.67	Gallons	53.00%	0.00%	5.655	0.000
1	1	DOWANOLETHER	46.00	7.36	Gallons	100.00%	0.00%	338.560	0.000
1	1	NBUTYLACETATE	11.00	7.31	Gallons	100.00%	0.00%	80.410	0.000
1	1	PA310	7,200.00	8.40	Pounds	0.00%	0.00%	0.000	0.000
1	1	T82B2751	2.60	7.80	Gallons	74.00%	0.00%	15.007	0.000
1	1	T82L2753	0.80	8.00	Gallons	66.00%	0.00%	4.224	0.000
1	1	T82R2752	2.00	7.03	Gallons	89.50%	1.00%	12.584	0.141
1	1	T82W2756	0.80	11.60	Gallons	41.00%	0.00%	3.805	0.000
1	2	01031	1,320.00	7.04	Gallons	100.00%	0.00%	9,295.440	0.000
1	2	6W848	4.00	13.76	Gallons	32.20%	0.00%	17.723	0.000
1	2	6Y405D	4.00	8.09	Gallons	70.00%	3.00%	22.652	0.971

Month	Bld	Woodgrain Item Number	Quantity Used	Weight	Unit of Measure	% VOC by Weight	% HAPs by Weight	Pounds VOC	Pounds HAPs
1	2	6Y70D	0.80	8.29	Gallons	39.60%	0.00%	2.626	0.000
1	2	6Y852	4.00	10.67	Gallons	53.00%	0.00%	22.620	0.000
1	2	7219	50.00	6.91	Gallons	72.00%	0.00%	248.760	0.000
1	2	808572	1,560.00	8.90	Pounds	0.10%	0.10%	1.560	1.560
1	2	A60R2	1.00	16.96	Gallons	15.00%	15.00%	2.544	2.544
1	2	CHE-DAP	0.16	18.43	Gallons	0.00%	0.00%	0.000	0.000
1	2	DOWANOLETHER	184.00	7.36	Gallons	100.00%	0.00%	1,354.240	0.000
1	2	E60WL510	245.00	12.50	Gallons	0.98%	0.00%	29.982	0.000
1	2	E60YL502	474.00	12.15	Gallons	0.98%	0.00%	56.439	0.000
1	2	M64WL505	5.00	10.55	Gallons	3.30%	0.00%	1.741	0.000
1	2	MAK	5.00	6.76	Gallons	100.00%	0.00%	33.800	0.000
1	2	NBUTYLACETATE	44.00	7.31	Gallons	100.00%	0.00%	321.640	0.000
1	2	P63YL0002	600.00	8.82	Gallons	42.70%	3.50%	2,259.684	185.220
1	2	P65BH36	53.00	7.70	Gallons	74.20%	24.20%	302.810	98.760
1	2	P65BH37	20.00	7.91	Gallons	56.40%	0.00%	89.225	0.000
1	2	P65RH39	111.00	7.70	Gallons	74.20%	31.20%	634.187	266.666
1	2	P65RH40	45.00	8.25	Gallons	51.50%	0.00%	191.194	0.000
1	2	P65RH41	96.00	8.09	Gallons	51.50%	0.00%	399.970	0.000
1	2	P65RL0001	100.00	7.82	Gallons	58.70%	4.20%	459.034	32.844
1	2	P65WH89	700.00	9.11	Gallons	44.80%	0.00%	2,856.896	0.000
1	2	P65WL0004	1,500.00	8.72	Gallons	50.60%	5.20%	6,618.480	680.160
1	2	P65XX001	200.00	8.41	Gallons	42.60%	3.20%	716.532	53.824
1	2	P65YH49	53.00	8.10	Gallons	52.20%	0.00%	224.095	0.000
1	2	P65YH50	550.00	8.49	Gallons	49.00%	0.10%	2,288.055	4.670
1	2	P65YH52	900.00	8.35	Gallons	47.70%	0.10%	3,584.655	7.515
1	2	P65YL0001	300.00	8.05	Gallons	56.40%	4.20%	1,362.060	101.430

Month	Bld	Woodgrain Item Number	Quantity Used	Weight	Unit of Measure	% VOC by Weight	% HAPs by Weight	Pounds VOC	Pounds HAPs
1	2	T67F6	73.00	7.37	Gallons	26.70%	0.00%	143.649	0.000
1	2	T75XXF001-25	200.00	7.39	Gallons	79.00%	10.20%	1,167.620	150.756
1	2	T82B2751	10.40	7.80	Gallons	74.00%	0.00%	60.029	0.000
1	2	T82L2753	3.20	8.00	Gallons	66.00%	0.00%	16.896	0.000
1	2	T82R2752	8.00	7.03	Gallons	89.50%	1.00%	50.335	0.562
1	2	T82W2756	3.20	11.60	Gallons	41.00%	0.00%	15.219	0.000
1	2	T82Y2753	10.00	8.32	Gallons	53.50%	0.10%	44.512	0.083
1	3	E60WV504	17,462.00	12.69	Pounds	1.00%	0.00%	174.620	0.000
1	3	X-PAI-E60WL517	11,800.00	12.00	Pounds	1.70%	0.00%	200.600	0.000
1	3	X-PAI-WHITE ACRY	12,741.00	14.03	Pounds	0.30%	0.00%	38.223	0.000
1	4	X-C100Y	430.00	10.60	Pounds	0.00%	0.00%	0.000	0.000
1	4	X-CHEM-BUSAN112	5,864.00	7.60	Pounds	0.72%	7.22%	42.379	423.539
1	4	X-CHEM-WOODLIFE	21,769.00	6.60	Pounds	38.03%	0.00%	8,277.662	0.000
1	5	X-WD2403	26,143.20	9.10	Pounds	2.10%	0.01%	547.961	1.307
2	1	1197152	106.00	8.41	Gallons	0.29%	0.26%	2.585	2.318
2	1	1251644	21.00	8.49	Gallons	0.23%	0.00%	0.410	0.000
2	1	1251646	74.00	10.58	Gallons	0.52%	0.00%	4.071	0.000
2	1	2H850	12,000.00	8.60	Pounds	0.00%	0.00%	0.096	0.096
2	1	6R17D	3.00	8.86	Gallons	58.80%	3.00%	15.629	0.797
2	1	6W848	4.00	13.76	Gallons	32.20%	0.00%	17.723	0.000
2	1	6Y852	2.00	10.67	Gallons	53.00%	0.00%	11.310	0.000
2	1	DOWANOLETHER	66.40	7.36	Gallons	100.00%	0.00%	488.704	0.000
2	1	EEP	10.00	7.91	Gallons	100.00%	0.00%	79.100	0.000
2	1	M768PEL	1,400.00	7.25	Pounds	0.00%	0.00%	0.000	0.000
2	1	PA310	9,600.00	8.40	Pounds	0.00%	0.00%	0.000	0.000
2	1	S61Y504	1.00	8.50	Gallons	70.00%	0.00%	5.950	0.000

Month	Bld	Woodgrain Item Number	Quantity Used	Weight	Unit of Measure	% VOC by Weight	% HAPs by Weight	Pounds VOC	Pounds HAPs
2	1	T82B2751	1.00	7.80	Gallons	74.00%	0.00%	5.772	0.000
2	1	T82CH5	4.00	8.20	Gallons	53.40%	1.20%	17.515	0.394
2	1	T82R2752	1.00	7.03	Gallons	89.50%	1.00%	6.292	0.070
2	1	T82R2754	1.00	9.35	Gallons	61.90%	0.00%	5.788	0.000
2	1	T82W2756	1.00	11.60	Gallons	41.00%	0.00%	4.756	0.000
2	2	01031	2,860.00	7.04	Gallons	100.00%	0.00%	20,140.120	0.000
2	2	6R17D	12.00	8.86	Gallons	58.80%	3.00%	62.516	3.190
2	2	6W848	16.00	13.76	Gallons	32.20%	0.00%	70.892	0.000
2	2	6Y362	5.00	11.35	Gallons	50.00%	25.00%	28.375	14.188
2	2	6Y852	8.00	10.67	Gallons	53.00%	0.00%	45.241	0.000
2	2	7219	55.00	6.91	Gallons	72.00%	0.00%	273.636	0.000
2	2	A60W1	1.00	18.47	Gallons	10.00%	10.00%	1.847	1.847
2	2	DOWANOLETHER	265.60	7.36	Gallons	100.00%	0.00%	1,954.816	0.000
2	2	E60WL510	155.00	12.50	Gallons	0.98%	0.00%	18.968	0.000
2	2	EEP	40.00	7.91	Gallons	100.00%	0.00%	316.400	0.000
2	2	MAK	55.00	6.76	Gallons	100.00%	0.00%	371.800	0.000
2	2	OK412	25.00	16.40	Gallons	0.00%	0.00%	0.000	0.000
2	2	P63YL0002	300.00	8.82	Gallons	42.70%	3.50%	1,129.842	92.610
2	2	P65RH41	50.00	8.09	Gallons	51.50%	0.00%	208.318	0.000
2	2	P65RL0001	203.00	7.82	Gallons	58.70%	4.20%	931.839	66.673
2	2	P65WL0004	1,500.00	8.72	Gallons	50.60%	5.20%	6,618.480	680.160
2	2	P65XX001	600.00	8.41	Gallons	42.60%	3.20%	2,149.596	161.472
2	2	P65YH49	53.00	8.10	Gallons	52.20%	0.00%	224.095	0.000
2	2	P65YL0001	1,001.00	8.05	Gallons	56.40%	4.20%	4,544.740	338.438
2	2	T67F6	371.00	7.37	Gallons	26.70%	0.00%	730.050	0.000
2	2	T75XXF001-25	50.00	7.39	Gallons	79.00%	10.20%	291.905	37.689

Month	Bld	Woodgrain Item Number	Quantity Used	Weight	Unit of Measure	% VOC by Weight	% HAPs by Weight	Pounds VOC	Pounds HAPs
2	2	T82B2751	4.00	7.80	Gallons	74.00%	0.00%	23.088	0.000
2	2	T82CH5	16.00	8.20	Gallons	53.40%	1.20%	70.061	1.574
2	2	T82R2752	4.00	7.03	Gallons	89.50%	1.00%	25.167	0.281
2	2	T82R2754	4.00	9.35	Gallons	61.90%	0.00%	23.151	0.000
2	2	T82W2756	4.00	11.60	Gallons	41.00%	0.00%	19.024	0.000
2	2	T82Y2753	10.00	8.32	Gallons	53.50%	0.10%	44.512	0.083
2	3	E60WV504	18,097.00	12.69	Pounds	1.00%	0.00%	180.970	0.000
2	3	X-PAI-E60WL517	11,800.00	12.00	Pounds	1.70%	0.00%	200.600	0.000
2	3	X-PAI-WHITE ACRY	5,720.00	14.03	Pounds	0.30%	0.00%	17.160	0.000
2	4	X-C100Y	350.00	10.60	Pounds	0.00%	0.00%	0.000	0.000
2	4	X-CHEM-BUSAN112	2,462.00	7.60	Pounds	0.72%	7.22%	17.793	177.823
2	4	X-CHEM-EXXSOL D	12,603.00	6.45	Pounds	39.07%	0.00%	4,923.992	0.025
2	4	X-CHEM-WOODLIFE	35,910.00	6.60	Pounds	38.03%	0.00%	13,654.778	0.000
2	5	X-WD2403	21,192.80	9.10	Pounds	2.10%	0.01%	444.201	1.060
3	1	108R9	2.00	8.10	Gallons	60.00%	0.00%	9.720	0.000
3	1	1197152	4.00	8.41	Gallons	0.29%	0.26%	0.098	0.087
3	1	1251644	19.00	8.49	Gallons	0.23%	0.00%	0.371	0.000
3	1	1251646	55.00	10.58	Gallons	0.52%	0.00%	3.026	0.000
3	1	2H850	16,000.00	8.60	Pounds	0.00%	0.00%	0.128	0.128
3	1	6B849	3.00	8.82	Gallons	58.84%	0.00%	15.569	0.000
3	1	6R17D	5.20	8.86	Gallons	58.80%	3.00%	27.090	1.382
3	1	6W848	4.00	13.76	Gallons	32.20%	0.00%	17.723	0.000
3	1	6Y852	7.00	10.67	Gallons	53.00%	0.00%	39.586	0.000
3	1	ACETONE	10.80	6.60	Gallons	100.00%	0.00%	71.280	0.000
3	1	DOWANOLETHER	10.80	7.36	Gallons	100.00%	0.00%	79.488	0.000
3	1	EEP	17.00	7.91	Gallons	100.00%	0.00%	134.470	0.000

Month	Bld	Woodgrain Item Number	Quantity Used	Weight	Unit of Measure	% VOC by Weight	% HAPs by Weight	Pounds VOC	Pounds HAPs
3	1	M768PEL	4,200.00	7.25	Pounds	0.00%	0.00%	0.000	0.000
3	1	NBUTYLACETATE	33.00	7.31	Gallons	100.00%	0.00%	241.230	0.000
3	1	PA310	7,200.00	8.40	Pounds	0.00%	0.00%	0.000	0.000
3	1	T75CH46	31.80	7.71	Gallons	67.60%	0.00%	165.740	0.000
3	1	T82B2751	1.00	7.80	Gallons	74.00%	0.00%	5.772	0.000
3	1	T82R2754	1.00	9.35	Gallons	61.90%	0.00%	5.788	0.000
3	2	01031	770.00	7.04	Gallons	100.00%	0.00%	5,422.340	0.000
3	2	108R8	55.00	8.20	Gallons	69.00%	40.00%	311.190	180.400
3	2	108R9	8.00	8.10	Gallons	60.00%	0.00%	38.880	0.000
3	2	6B849	12.00	8.82	Gallons	58.84%	0.00%	62.276	0.000
3	2	6R17D	20.80	8.86	Gallons	58.80%	3.00%	108.361	5.529
3	2	6W848	16.00	13.76	Gallons	32.20%	0.00%	70.892	0.000
3	2	6Y362	5.00	11.35	Gallons	50.00%	25.00%	28.375	14.188
3	2	6Y852	28.00	10.67	Gallons	53.00%	0.00%	158.343	0.000
3	2	7219	55.00	6.91	Gallons	72.00%	0.00%	273.636	0.000
3	2	804SW	5.00	7.47	Gallons	0.00%	0.00%	0.000	0.000
3	2	A60B1	1.00	11.24	Gallons	24.00%	24.00%	2.698	2.698
3	2	ACETONE	43.20	6.60	Gallons	100.00%	0.00%	285.120	0.000
3	2	CHE-DAP	0.24	18.43	Gallons	0.00%	0.00%	0.000	0.000
3	2	CHE-DAP	0.32	18.43	Gallons	0.00%	0.00%	0.000	0.000
3	2	DOWANOLETHER	43.20	7.36	Gallons	100.00%	0.00%	317.952	0.000
3	2	E60WL510	400.00	12.50	Gallons	0.98%	0.00%	48.950	0.000
3	2	EEP	68.00	7.91	Gallons	100.00%	0.00%	537.880	0.000
3	2	MAK	15.00	6.76	Gallons	100.00%	0.00%	101.400	0.000
3	2	NBUTYLACETATE	132.00	7.31	Gallons	100.00%	0.00%	964.920	0.000
3	2	P63YL0002	1,556.00	8.82	Gallons	42.70%	3.50%	5,860.114	480.337

Month	Bld	Woodgrain Item Number	Quantity Used	Weight	Unit of Measure	% VOC by Weight	% HAPs by Weight	Pounds VOC	Pounds HAPs
3	2	P65RH39	105.00	7.70	Gallons	74.20%	31.20%	599.907	252.252
3	2	P65RL0001	215.00	7.82	Gallons	58.70%	4.20%	986.923	70.615
3	2	P65WL0004	2,072.00	8.72	Gallons	50.60%	5.20%	9,142.327	939.528
3	2	P65XX001	600.00	8.41	Gallons	42.60%	3.20%	2,149.596	161.472
3	2	T67F6	159.00	7.37	Gallons	26.70%	0.00%	312.879	0.000
3	2	T75CH46	127.20	7.71	Gallons	67.60%	0.00%	662.961	0.000
3	2	T75XXF001-25	5.00	7.39	Gallons	79.00%	10.20%	29.191	3.769
3	2	T82B2751	4.00	7.80	Gallons	74.00%	0.00%	23.088	0.000
3	2	T82R2754	4.00	9.35	Gallons	61.90%	0.00%	23.151	0.000
3	2	T82Y2753	5.00	8.32	Gallons	53.50%	0.10%	22.256	0.042
3	2	X-PAI-10531	2,997.00	8.33	Pounds	2.00%	0.00%	59.940	0.000
3	3	E60WV504	1,778.00	12.69	Pounds	1.00%	0.00%	17.780	0.000
3	3	X-PAI-E60WL517	15,367.00	12.00	Pounds	1.70%	0.00%	261.239	0.000
3	4	X-C100Y	488.00	10.60	Pounds	0.00%	0.00%	0.000	0.000
3	4	X-CHEM-BUSAN112	8,094.00	7.60	Pounds	0.72%	7.22%	58.495	584.605
3	4	X-CHEM-EXXSOL D	41,420.00	6.45	Pounds	39.07%	0.00%	16,182.794	0.083
3	5	X-WD2403	28,392.00	9.10	Pounds	2.10%	0.01%	595.096	1.420
4	1	108R9	1.00	8.10	Gallons	60.00%	0.00%	4.860	0.000
4	1	1197152	15.00	8.41	Gallons	0.29%	0.26%	0.366	0.328
4	1	1251644	20.00	8.49	Gallons	0.23%	0.00%	0.391	0.000
4	1	1251646	49.00	10.58	Gallons	0.52%	0.00%	2.696	0.000
4	1	1253194	1.00	8.33	Gallons	1.48%	0.00%	0.123	0.000
4	1	2H850	10,000.00	8.60	Pounds	0.00%	0.00%	0.080	0.080
4	1	6B849	1.00	8.82	Gallons	58.84%	0.00%	5.190	0.000
4	1	6N371	2.00	9.85	Gallons	50.39%	0.00%	9.927	0.000
4	1	6R17D	3.00	8.86	Gallons	58.80%	3.00%	15.629	0.797

Month	Bld	Woodgrain Item Number	Quantity Used	Weight	Unit of Measure	% VOC by Weight	% HAPs by Weight	Pounds VOC	Pounds HAPs
4	1	6W848	2.00	13.76	Gallons	32.20%	0.00%	8.861	0.000
4	1	6Y852	4.00	10.67	Gallons	53.00%	0.00%	22.620	0.000
4	1	ACETONE	21.60	6.60	Gallons	100.00%	0.00%	142.560	0.000
4	1	DOWANOLETHER	10.80	7.36	Gallons	100.00%	0.00%	79.488	0.000
4	1	EEP	24.00	7.91	Gallons	100.00%	0.00%	189.840	0.000
4	1	M768PEL	1,400.00	7.25	Pounds	0.00%	0.00%	0.000	0.000
4	1	NBUTYLACETATE	33.00	7.31	Gallons	100.00%	0.00%	241.230	0.000
4	1	PA285	430.00	9.07	Pounds	0.00%	0.00%	0.000	0.000
4	1	PA310	4,800.00	8.40	Pounds	0.00%	0.00%	0.000	0.000
4	1	S61B500	2.00	8.99	Gallons	73.00%	0.00%	13.125	0.000
4	1	S61Y504	1.00	8.50	Gallons	70.00%	0.00%	5.950	0.000
4	1	T75CH46	40.40	7.71	Gallons	67.60%	0.00%	210.563	0.000
4	2	01031	1,870.00	7.04	Gallons	100.00%	0.00%	13,168.540	0.000
4	2	108B2	55.00	7.80	Gallons	60.50%	33.70%	259.545	144.573
4	2	108R8	55.00	8.20	Gallons	69.00%	40.00%	311.190	180.400
4	2	108R9	4.00	8.10	Gallons	60.00%	0.00%	19.440	0.000
4	2	6B849	4.00	8.82	Gallons	58.84%	0.00%	20.759	0.000
4	2	6N371	8.00	9.85	Gallons	50.39%	0.00%	39.707	0.000
4	2	6R17D	12.00	8.86	Gallons	58.80%	3.00%	62.516	3.190
4	2	6W848	8.00	13.76	Gallons	32.20%	0.00%	35.446	0.000
4	2	6Y362	15.00	11.35	Gallons	50.00%	25.00%	85.125	42.563
4	2	6Y852	16.00	10.67	Gallons	53.00%	0.00%	90.482	0.000
4	2	7219	55.00	6.91	Gallons	72.00%	0.00%	273.636	0.000
4	2	804SW	5.00	7.47	Gallons	0.00%	0.00%	0.000	0.000
4	2	808572	1,800.00	8.90	Pounds	0.10%	0.10%	1.800	1.800
4	2	ACETONE	86.40	6.60	Gallons	100.00%	0.00%	570.240	0.000

Month	Bld	Woodgrain Item Number	Quantity Used	Weight	Unit of Measure	% VOC by Weight	% HAPs by Weight	Pounds VOC	Pounds HAPs
4	2	DOWANOLETHER	43.20	7.36	Gallons	100.00%	0.00%	317.952	0.000
4	2	E60WL510	265.00	12.50	Gallons	0.98%	0.00%	32.429	0.000
4	2	EEP	96.00	7.91	Gallons	100.00%	0.00%	759.360	0.000
4	2	MAK	85.00	6.76	Gallons	100.00%	0.00%	574.600	0.000
4	2	NBUTYLACETATE	132.00	7.31	Gallons	100.00%	0.00%	964.920	0.000
4	2	P63YL0002	597.00	8.82	Gallons	42.70%	3.50%	2,248.386	184.294
4	2	P65BH37	100.00	7.91	Gallons	56.40%	0.00%	446.124	0.000
4	2	P65RH41	150.00	8.09	Gallons	51.50%	0.00%	624.953	0.000
4	2	P65RL0001	345.00	7.82	Gallons	58.70%	4.20%	1,583.667	113.312
4	2	P65WL0004	2,280.00	8.72	Gallons	50.60%	5.20%	10,060.090	1033.843
4	2	P65XX001	400.00	8.41	Gallons	42.60%	3.20%	1,433.064	107.648
4	2	P65YL0001	550.00	8.05	Gallons	56.40%	4.20%	2,497.110	185.955
4	2	P65YL2	53.00	7.82	Gallons	52.30%	5.20%	216.763	21.552
4	2	T67F6	212.00	7.37	Gallons	26.70%	0.00%	417.171	0.000
4	2	T75CH46	161.60	7.71	Gallons	67.60%	0.00%	842.253	0.000
4	2	X-PAI-10531	3,046.00	8.33	Pounds	2.00%	0.00%	60.920	0.000
4	3	E60WV504	23,812.00	12.69	Pounds	1.00%	0.00%	238.120	0.000
4	3	X-PAI-E60WL517	13,017.00	12.00	Pounds	1.70%	0.00%	221.289	0.000
4	4	X-C100Y	37.00	10.60	Pounds	0.00%	0.00%	0.000	0.000
4	4	X-CHEM-BUSAN112	8,261.00	7.60	Pounds	0.72%	7.22%	59.701	596.666
4	4	X-CHEM-EXXSOL D	42,262.00	6.45	Pounds	39.07%	0.00%	16,511.763	0.085
4	5	X-WD2403	23,075.20	9.10	Pounds	2.10%	0.01%	483.656	1.154
5	1	1251644	10.00	8.49	Gallons	0.23%	0.00%	0.195	0.000
5	1	1251646	18.00	10.58	Gallons	0.52%	0.00%	0.990	0.000
5	1	2H850	10,000.00	8.60	Pounds	0.00%	0.00%	0.080	0.080
5	1	6B849	3.00	8.82	Gallons	58.84%	0.00%	15.569	0.000

Month	Bld	Woodgrain Item Number	Quantity Used	Weight	Unit of Measure	% VOC by Weight	% HAPs by Weight	Pounds VOC	Pounds HAPs
5	1	6N371	1.00	9.85	Gallons	50.39%	0.00%	4.963	0.000
5	1	6R17D	1.00	8.86	Gallons	58.80%	3.00%	5.210	0.266
5	1	6W848	3.00	13.76	Gallons	32.20%	0.00%	13.292	0.000
5	1	6Y405D	3.00	8.09	Gallons	70.00%	3.00%	16.989	0.728
5	1	6Y852	1.00	10.67	Gallons	53.00%	0.00%	5.655	0.000
5	1	ACETONE	10.80	6.60	Gallons	100.00%	0.00%	71.280	0.000
5	1	EEP	22.00	7.91	Gallons	100.00%	0.00%	174.020	0.000
5	1	M768PEL	4,200.00	7.25	Pounds	0.00%	0.00%	0.000	0.000
5	1	NBUTYLACETATE	22.00	7.31	Gallons	100.00%	0.00%	160.820	0.000
5	1	PA310	4,800.00	8.40	Pounds	0.00%	0.00%	0.000	0.000
5	1	S61B500	2.00	8.99	Gallons	73.00%	0.00%	13.125	0.000
5	1	S61Y504	2.00	8.50	Gallons	70.00%	0.00%	11.900	0.000
5	1	T75CH46	21.20	7.71	Gallons	67.60%	0.00%	110.494	0.000
5	2	01031	1,540.00	7.04	Gallons	100.00%	0.00%	10,844.680	0.000
5	2	6B849	12.00	8.82	Gallons	58.84%	0.00%	62.276	0.000
5	2	6N371	4.00	9.85	Gallons	50.39%	0.00%	19.854	0.000
5	2	6R17D	4.00	8.86	Gallons	58.80%	3.00%	20.839	1.063
5	2	6W848	12.00	13.76	Gallons	32.20%	0.00%	53.169	0.000
5	2	6Y405D	12.00	8.09	Gallons	70.00%	3.00%	67.956	2.912
5	2	6Y852	4.00	10.67	Gallons	53.00%	0.00%	22.620	0.000
5	2	ACETONE	43.20	6.60	Gallons	100.00%	0.00%	285.120	0.000
5	2	CHE-DAP	0.24	18.43	Gallons	0.00%	0.00%	0.000	0.000
5	2	E60WL510	174.00	12.50	Gallons	0.98%	0.00%	21.293	0.000
5	2	EEP	88.00	7.91	Gallons	100.00%	0.00%	696.080	0.000
5	2	M64WL505	5.00	10.55	Gallons	3.30%	0.00%	1.741	0.000
5	2	MAK	5.00	6.76	Gallons	100.00%	0.00%	33.800	0.000

Month	Bld	Woodgrain Item Number	Quantity Used	Weight	Unit of Measure	% VOC by Weight	% HAPs by Weight	Pounds VOC	Pounds HAPs
5	2	NBUTYLACETATE	88.00	7.31	Gallons	100.00%	0.00%	643.280	0.000
5	2	OK412	25.00	16.40	Gallons	0.00%	0.00%	0.000	0.000
5	2	P63YL0002	885.00	8.82	Gallons	42.70%	3.50%	3,333.034	273.200
5	2	P65BL1	53.00	7.64	Gallons	57.50%	5.20%	232.829	21.056
5	2	P65RL0001	318.00	7.82	Gallons	58.70%	4.20%	1,459.728	104.444
5	2	P65WL0004	1,467.00	8.72	Gallons	50.60%	5.20%	6,472.873	665.196
5	2	P65YL0001	657.00	8.05	Gallons	56.40%	4.20%	2,982.911	222.132
5	2	P65YL2	74.00	7.82	Gallons	52.30%	5.20%	302.650	30.091
5	2	T67F6	106.00	7.37	Gallons	26.70%	0.00%	208.586	0.000
5	2	T75CH46	84.80	7.71	Gallons	67.60%	0.00%	441.974	0.000
5	3	10532	5,270.00	11.50	Pounds	1.00%	0.00%	52.700	0.000
5	3	E60WV504	29,210.00	12.69	Pounds	1.00%	0.00%	292.100	0.000
5	3	X-PAI-10505	7,607.00	14.25	Pounds	2.00%	0.00%	152.140	0.000
5	3	X-PAI-E60WL517	13,017.00	12.00	Pounds	1.70%	0.00%	221.289	0.000
5	4	X-C100Y	318.00	10.60	Pounds	0.00%	0.00%	0.000	0.000
5	4	X-CHEM-BUSAN112	7,030.00	7.60	Pounds	0.72%	7.22%	50.805	507.755
5	4	X-CHEM-EXXSOL D	35,983.00	6.45	Pounds	39.07%	0.00%	14,058.558	0.072
5	5	X-WD2403	19,624.00	9.10	Pounds	2.10%	0.01%	411.319	0.981
6	1	2H850	14,000.00	8.60	Pounds	0.00%	0.00%	0.112	0.112
6	1	6B849	3.00	8.82	Gallons	58.84%	0.00%	15.569	0.000
6	1	6R850	3.00	12.44	Gallons	40.67%	0.00%	15.178	0.000
6	1	6Y852	2.00	10.67	Gallons	53.00%	0.00%	11.310	0.000
6	1	ACETONE	10.80	6.60	Gallons	100.00%	0.00%	71.280	0.000
6	1	EEP	22.00	7.91	Gallons	100.00%	0.00%	174.020	0.000
6	1	M768PEL	4,200.00	7.25	Pounds	0.00%	0.00%	0.000	0.000
6	1	NBUTYLACETATE	55.00	7.31	Gallons	100.00%	0.00%	402.050	0.000

Month	Bld	Woodgrain Item Number	Quantity Used	Weight	Unit of Measure	% VOC by Weight	% HAPs by Weight	Pounds VOC	Pounds HAPs
6	1	PA310	9,600.00	8.40	Pounds	0.00%	0.00%	0.000	0.000
6	1	T75CH46	44.80	7.71	Gallons	67.60%	0.00%	233.496	0.000
6	2	01031	1,485.00	7.04	Gallons	100.00%	0.00%	10,457.370	0.000
6	2	6B849	12.00	8.82	Gallons	58.84%	0.00%	62.276	0.000
6	2	6R850	12.00	12.44	Gallons	40.67%	0.00%	60.712	0.000
6	2	6Y852	8.00	10.67	Gallons	53.00%	0.00%	45.241	0.000
6	2	7219	53.00	6.91	Gallons	72.00%	0.00%	263.686	0.000
6	2	ACETONE	43.20	6.60	Gallons	100.00%	0.00%	285.120	0.000
6	2	CHE-DAP	0.08	18.43	Gallons	0.00%	0.00%	0.000	0.000
6	2	E60WL510	365.00	12.50	Gallons	0.98%	0.00%	44.667	0.000
6	2	EEP	88.00	7.91	Gallons	100.00%	0.00%	696.080	0.000
6	2	LKF017840	55.00	8.58	Gallons	8.50%	1.80%	40.112	8.494
6	2	NBUTYLACETATE	220.00	7.31	Gallons	100.00%	0.00%	1,608.200	0.000
6	2	P63YL0002	1,050.00	8.82	Gallons	42.70%	3.50%	3,954.447	324.135
6	2	P65BL1	53.00	7.64	Gallons	57.50%	5.20%	232.829	21.056
6	2	P65RL0001	318.00	7.82	Gallons	58.70%	4.20%	1,459.728	104.444
6	2	P65WL0004	2,100.00	8.72	Gallons	50.60%	5.20%	9,265.872	952.224
6	2	P65YL0001	900.00	8.05	Gallons	56.40%	4.20%	4,086.180	304.290
6	2	T67F6	265.00	7.37	Gallons	26.70%	0.00%	521.464	0.000
6	2	T75CH46	179.20	7.71	Gallons	67.60%	0.00%	933.983	0.000
6	3	E60WV504	31,813.00	12.69	Pounds	1.00%	0.00%	318.130	0.000
6	3	X-PAI-10505	3,429.00	14.25	Pounds	2.00%	0.00%	68.580	0.000
6	4	X-C100Y	339.00	10.60	Pounds	0.00%	0.00%	0.000	0.000
6	4	X-CHEM-BUSAN112	13,376.00	7.60	Pounds	0.72%	7.22%	96.667	966.107
6	4	X-CHEM-EXXSOL D	68,435.00	6.45	Pounds	39.07%	0.00%	26,737.555	0.137
6	5	X-WD2403	28,210.40	9.10	Pounds	2.10%	0.01%	591.290	1.411

Month	Bld	Woodgrain Item Number	Quantity Used	Weight	Unit of Measure	% VOC by Weight	% HAPs by Weight	Pounds VOC	Pounds HAPs
7	1	1225258	1.00	8.66	Gallons	0.80%	0.00%	0.069	0.000
7	1	1251644	17.00	8.49	Gallons	0.23%	0.00%	0.332	0.000
7	1	1251646	49.00	10.58	Gallons	0.52%	0.00%	2.696	0.000
7	1	1253194	1.00	8.33	Gallons	1.48%	0.00%	0.123	0.000
7	1	2H850	13,000.00	8.60	Pounds	0.00%	0.00%	0.104	0.104
7	1	5S775D	1.00	8.33	Gallons	59.20%	0.00%	4.931	0.000
7	1	6R850	3.00	12.44	Gallons	40.67%	0.00%	15.178	0.000
7	1	6W848	3.00	13.76	Gallons	32.20%	0.00%	13.292	0.000
7	1	6Y405D	5.00	8.09	Gallons	70.00%	3.00%	28.315	1.214
7	1	6Y852	7.00	10.67	Gallons	53.00%	0.00%	39.586	0.000
7	1	ACETONE	76.00	6.60	Gallons	100.00%	0.00%	501.600	0.000
7	1	EEP	56.00	7.91	Gallons	100.00%	0.00%	442.960	0.000
7	1	M768PEL	1,400.00	7.25	Pounds	0.00%	0.00%	0.000	0.000
7	1	NBUTYLACETATE	66.00	7.31	Gallons	100.00%	0.00%	482.460	0.000
7	1	PA285	400.00	9.07	Pounds	0.00%	0.00%	0.000	0.000
7	1	PA310	7,200.00	8.40	Pounds	0.00%	0.00%	0.000	0.000
7	1	S61B500	1.00	8.99	Gallons	73.00%	0.00%	6.563	0.000
7	1	S61E501	3.00	8.65	Gallons	80.00%	0.00%	20.760	0.000
7	1	S61L505	1.00	8.35	Gallons	69.90%	0.00%	5.837	0.000
7	1	S61R503	2.00	8.70	Gallons	70.00%	0.00%	12.180	0.000
7	1	S61Y504	7.00	8.50	Gallons	70.00%	0.00%	41.650	0.000
7	1	T75CH46	31.80	7.71	Gallons	67.60%	0.00%	165.740	0.000
7	2	01031	2,750.00	7.04	Gallons	100.00%	0.00%	19,365.500	0.000
7	2	5S775D	4.00	8.33	Gallons	59.20%	0.00%	19.725	0.000
7	2	6R850	12.00	12.44	Gallons	40.67%	0.00%	60.712	0.000
7	2	6W848	12.00	13.76	Gallons	32.20%	0.00%	53.169	0.000

Month	Bld	Woodgrain Item Number	Quantity Used	Weight	Unit of Measure	% VOC by Weight	% HAPs by Weight	Pounds VOC	Pounds HAPs
7	2	6Y405D	20.00	8.09	Gallons	70.00%	3.00%	113.260	4.854
7	2	6Y852	28.00	10.67	Gallons	53.00%	0.00%	158.343	0.000
7	2	7219	55.00	6.91	Gallons	72.00%	0.00%	273.636	0.000
7	2	A60B1	1.00	11.24	Gallons	24.00%	24.00%	2.698	2.698
7	2	A60Y3	2.00	14.76	Gallons	0.00%	0.00%	0.000	0.000
7	2	ACETONE	304.00	6.60	Gallons	100.00%	0.00%	2,006.400	0.000
7	2	E60WL510	206.00	12.50	Gallons	0.98%	0.00%	25.209	0.000
7	2	EEP	224.00	7.91	Gallons	100.00%	0.00%	1,771.840	0.000
7	2	M64RL500	5.00	8.91	Gallons	3.30%	0.00%	1.470	0.000
7	2	M64W501	15.00	9.13	Gallons	6.40%	0.00%	8.765	0.000
7	2	M64YL500	5.00	9.29	Gallons	3.00%	0.00%	1.394	0.000
7	2	MAK	10.00	6.76	Gallons	100.00%	0.00%	67.600	0.000
7	2	NBUTYLACETATE	264.00	7.31	Gallons	100.00%	0.00%	1,929.840	0.000
7	2	OK412	25.00	16.40	Gallons	0.00%	0.00%	0.000	0.000
7	2	P63YL0002	1,050.00	8.82	Gallons	42.70%	3.50%	3,954.447	324.135
7	2	P65BL1	53.00	7.64	Gallons	57.50%	5.20%	232.829	21.056
7	2	P65RL0001	371.00	7.82	Gallons	58.70%	4.20%	1,703.016	121.851
7	2	P65WL0004	1,500.00	8.72	Gallons	50.60%	5.20%	6,618.480	680.160
7	2	P65YL0001	914.00	8.05	Gallons	56.40%	4.20%	4,149.743	309.023
7	2	T75CH46	127.20	7.71	Gallons	67.60%	0.00%	662.961	0.000
7	3	E60WV504	18,097.00	12.69	Pounds	1.00%	0.00%	180.970	0.000
7	4	X-C100Y	233.00	10.60	Pounds	0.00%	0.00%	0.000	0.000
7	4	X-CHEM-BUSAN112	8,876.00	7.60	Pounds	0.72%	7.22%	64.146	641.086
7	4	X-CHEM-EXXSOL D	43,558.00	6.45	Pounds	39.07%	0.00%	17,018.111	0.087
7	5	X-WD2403	20,202.40	9.10	Pounds	2.10%	0.01%	423.442	1.010
8	2	M64RL500	5.00	8.91	Gallons	3.30%	0.00%	1.470	0.000

Month	Bld	Woodgrain Item Number	Quantity Used	Weight	Unit of Measure	% VOC by Weight	% HAPs by Weight	Pounds VOC	Pounds HAPs
8	2	M64W501	15.00	9.13	Gallons	6.40%	0.00%	8.765	0.000
8	2	M64YL500	5.00	9.29	Gallons	3.00%	0.00%	1.394	0.000
8	2	P63YL0002	1,050.00	8.82	Gallons	42.70%	3.50%	3,954.447	324.135
8	2	P65BL1	53.00	7.64	Gallons	57.50%	5.20%	232.829	21.056
8	2	P65RL0001	371.00	7.82	Gallons	58.70%	4.20%	1,703.016	121.851
8	2	P65WL0004	1,500.00	8.72	Gallons	50.60%	5.20%	6,618.480	680.160
8	2	P65YL0001	914.00	8.05	Gallons	56.40%	4.20%	4,149.743	309.023
8	3	E60WV504	18,097.00	12.69	Pounds	1.00%	0.00%	180.970	0.000
8	4	X-C100Y	276.00	10.60	Pounds	0.00%	0.00%	0.000	0.000
8	4	X-CHEM-BUSAN112	8,344.00	7.60	Pounds	0.72%	7.22%	60.301	602.661
8	4	X-CHEM-EXXSOL D	41,912.00	6.45	Pounds	39.07%	0.00%	16,375.018	0.084
8	5	X-WD2403	18,535.20	9.10	Pounds	2.10%	0.01%	388.498	0.927
9	1	1200704	3.00	8.74	Gallons	0.54%	0.00%	0.142	0.000
9	1	1251644	32.00	8.49	Gallons	0.23%	0.00%	0.625	0.000
9	1	1251646	56.00	10.58	Gallons	0.52%	0.00%	3.081	0.000
9	1	2H850	19,000.00	8.60	Pounds	0.00%	0.00%	0.152	0.152
9	1	6B849	1.00	8.82	Gallons	58.84%	0.00%	5.190	0.000
9	1	6R17D	4.00	8.86	Gallons	58.80%	3.00%	20.839	1.063
9	1	6R850	3.00	12.44	Gallons	40.67%	0.00%	15.178	0.000
9	1	6W848	1.00	13.76	Gallons	32.20%	0.00%	4.431	0.000
9	1	6Y405D	3.00	8.09	Gallons	70.00%	3.00%	16.989	0.728
9	1	ACETONE	21.40	6.60	Gallons	100.00%	0.00%	141.240	0.000
9	1	EEP	40.00	7.91	Gallons	100.00%	0.00%	316.400	0.000
9	1	M768PEL	4,200.00	7.25	Pounds	0.00%	0.00%	0.000	0.000
9	1	NBUTYLACETATE	99.00	7.31	Gallons	100.00%	0.00%	723.690	0.000
9	1	PA285	1,075.00	9.07	Pounds	0.00%	0.00%	0.000	0.000

Month	Bld	Woodgrain Item Number	Quantity Used	Weight	Unit of Measure	% VOC by Weight	% HAPs by Weight	Pounds VOC	Pounds HAPs
9	1	PA310	9,600.00	8.40	Pounds	0.00%	0.00%	0.000	0.000
9	1	S61B500	11.00	8.99	Gallons	73.00%	0.00%	72.190	0.000
9	1	S61R503	3.00	8.70	Gallons	70.00%	0.00%	18.270	0.000
9	1	S61R506	6.00	8.59	Gallons	79.98%	0.00%	41.222	0.000
9	1	S61Y504	14.00	8.50	Gallons	70.00%	0.00%	83.300	0.000
9	1	T75CH46	74.20	7.71	Gallons	67.60%	0.00%	386.727	0.000
9	2	01031	990.00	7.04	Gallons	100.00%	0.00%	6,971.580	0.000
9	2	6B849	4.00	8.82	Gallons	58.84%	0.00%	20.759	0.000
9	2	6R17D	16.00	8.86	Gallons	58.80%	3.00%	83.355	4.253
9	2	6R850	12.00	12.44	Gallons	40.67%	0.00%	60.712	0.000
9	2	6W848	4.00	13.76	Gallons	32.20%	0.00%	17.723	0.000
9	2	6Y405D	12.00	8.09	Gallons	70.00%	3.00%	67.956	2.912
9	2	804SW	10.00	7.47	Gallons	0.00%	0.00%	0.000	0.000
9	2	ACETONE	85.60	6.60	Gallons	100.00%	0.00%	564.960	0.000
9	2	CHE-DAP	0.08	18.43	Gallons	0.00%	0.00%	0.000	0.000
9	2	E60WL510	250.00	12.50	Gallons	0.98%	0.00%	30.594	0.000
9	2	E60YL502	314.00	12.15	Gallons	0.98%	0.00%	37.388	0.000
9	2	EEP	160.00	7.91	Gallons	100.00%	0.00%	1,265.600	0.000
9	2	M64RL500	5.00	8.91	Gallons	3.30%	0.00%	1.470	0.000
9	2	M64YL500	5.00	9.29	Gallons	3.00%	0.00%	1.394	0.000
9	2	NBUTYLACETATE	396.00	7.31	Gallons	100.00%	0.00%	2,894.760	0.000
9	2	OK412	25.00	16.40	Gallons	0.00%	0.00%	0.000	0.000
9	2	P65BL1	106.00	7.64	Gallons	57.50%	5.20%	465.658	42.112
9	2	P65RH39	55.00	7.70	Gallons	74.20%	31.20%	314.237	132.132
9	2	P65RL0001	371.00	7.82	Gallons	58.70%	4.20%	1,703.016	121.851
9	2	P65WL0004	2,703.00	8.72	Gallons	50.60%	5.20%	11,926.501	1225.648

Month	Bld	Woodgrain Item Number	Quantity Used	Weight	Unit of Measure	% VOC by Weight	% HAPs by Weight	Pounds VOC	Pounds HAPs
9	2	P65YL0001	1,064.00	8.05	Gallons	56.40%	4.20%	4,830.773	359.738
9	2	P65YL2	53.00	7.82	Gallons	52.30%	5.20%	216.763	21.552
9	2	T67F6	53.00	7.37	Gallons	26.70%	0.00%	104.293	0.000
9	2	T75CH46	296.80	7.71	Gallons	67.60%	0.00%	1,546.910	0.000
9	3	E60WV504	18,975.00	12.69	Pounds	1.00%	0.00%	189.750	0.000
9	4	X-C100Y	286.00	10.60	Pounds	0.00%	0.00%	0.000	0.000
9	4	X-CHEM-BUSAN112	10,260.00	7.60	Pounds	0.72%	7.22%	74.148	741.048
9	4	X-CHEM-EXXSOL D	58,378.00	6.45	Pounds	39.07%	0.00%	22,808.285	0.117
9	4	X-CHEM-TREWAX	6.00	8.33	Pounds	75.00%	0.00%	4.500	0.000
9	5	X-WD2403	21,804.00	9.10	Pounds	2.10%	0.01%	457.012	1.090
10	1	1200705	1.00	9.08	Gallons	0.00%	0.00%	0.000	0.000
10	1	1251644	17.00	8.49	Gallons	0.23%	0.00%	0.332	0.000
10	1	1251646	79.00	10.58	Gallons	0.52%	0.00%	4.346	0.000
10	1	2H850	15,300.00	8.60	Pounds	0.00%	0.00%	0.122	0.122
10	1	6R850	3.00	12.44	Gallons	40.67%	0.00%	15.178	0.000
10	1	6Y405D	4.00	8.09	Gallons	70.00%	3.00%	22.652	0.971
10	1	6Y852	6.00	10.67	Gallons	53.00%	0.00%	33.931	0.000
10	1	ACETONE	65.60	6.60	Gallons	100.00%	0.00%	432.960	0.000
10	1	M768PEL	4,575.00	7.25	Pounds	0.00%	0.00%	0.000	0.000
10	1	NBUTYLACETATE	22.00	7.31	Gallons	100.00%	0.00%	160.820	0.000
10	1	PA310	9,600.00	8.40	Pounds	0.00%	0.00%	0.000	0.000
10	1	T75CH46	21.20	7.71	Gallons	67.60%	0.00%	110.494	0.000
10	2	01031	1,760.00	7.04	Gallons	100.00%	0.00%	12,393.920	0.000
10	2	6R850	12.00	12.44	Gallons	40.67%	0.00%	60.712	0.000
10	2	6Y405D	16.00	8.09	Gallons	70.00%	3.00%	90.608	3.883
10	2	6Y852	24.00	10.67	Gallons	53.00%	0.00%	135.722	0.000

Month	Bld	Woodgrain Item Number	Quantity Used	Weight	Unit of Measure	% VOC by Weight	% HAPs by Weight	Pounds VOC	Pounds HAPs
10	2	7219	53.00	6.91	Gallons	72.00%	0.00%	263.686	0.000
10	2	ACETONE	262.40	6.60	Gallons	100.00%	0.00%	1,731.840	0.000
10	2	CHE-DAP	0.24	18.43	Gallons	0.00%	0.00%	0.000	0.000
10	2	E60WL510	150.00	12.50	Gallons	0.98%	0.00%	18.356	0.000
10	2	E60YL502	110.00	12.15	Gallons	0.98%	0.00%	13.098	0.000
10	2	NBUTYLACETATE	88.00	7.31	Gallons	100.00%	0.00%	643.280	0.000
10	2	P63YL0002	2,600.00	8.82	Gallons	42.70%	3.50%	9,791.964	802.620
10	2	P65RL0001	159.00	7.82	Gallons	58.70%	4.20%	729.864	52.222
10	2	P65WL0004	1,938.00	8.72	Gallons	50.60%	5.20%	8,551.076	878.767
10	2	P65YL0001	600.00	8.05	Gallons	56.40%	4.20%	2,724.120	202.860
10	2	T75CH46	84.80	7.71	Gallons	67.60%	0.00%	441.974	0.000
10	3	E60WV504	14,478.00	12.69	Pounds	1.00%	0.00%	144.780	0.000
10	4	X-C100Y	297.00	10.60	Pounds	0.00%	0.00%	0.000	0.000
10	4	X-CHEM-BUSAN112	5,791.00	7.60	Pounds	0.72%	7.22%	41.851	418.266
10	4	X-CHEM-CB	675.00	8.33	Gallons	1.00%	0.00%	56.228	0.000
10	4	X-CHEM-EXXSOL D	37,020.00	6.45	Pounds	39.07%	0.00%	14,463.714	0.074
10	5	X-WD2403	18,840.00	9.10	Pounds	2.10%	0.01%	394.886	0.942
11	1	1200705	1.00	9.08	Gallons	0.00%	0.00%	0.000	0.000
11	1	1251644	17.00	8.49	Gallons	0.23%	0.00%	0.332	0.000
11	1	1251646	79.00	10.58	Gallons	0.52%	0.00%	4.346	0.000
11	1	2H850	15,300.00	8.60	Pounds	0.00%	0.00%	0.122	0.122
11	1	6R850	3.00	12.44	Gallons	40.67%	0.00%	15.178	0.000
11	1	6Y405D	4.00	8.09	Gallons	70.00%	3.00%	22.652	0.971
11	1	6Y852	6.00	10.67	Gallons	53.00%	0.00%	33.931	0.000
11	1	ACETONE	65.60	6.60	Gallons	100.00%	0.00%	432.960	0.000
11	1	M768PEL	4,575.00	7.25	Pounds	0.00%	0.00%	0.000	0.000

Month	Bld	Woodgrain Item Number	Quantity Used	Weight	Unit of Measure	% VOC by Weight	% HAPs by Weight	Pounds VOC	Pounds HAPs
11	1	NBUTYLACETATE	22.00	7.31	Gallons	100.00%	0.00%	160.820	0.000
11	1	PA310	9,600.00	8.40	Pounds	0.00%	0.00%	0.000	0.000
11	1	T75CH46	21.20	7.71	Gallons	67.60%	0.00%	110.494	0.000
11	2	01031	1,760.00	7.04	Gallons	100.00%	0.00%	12,393.920	0.000
11	2	6R850	12.00	12.44	Gallons	40.67%	0.00%	60.712	0.000
11	2	6Y405D	16.00	8.09	Gallons	70.00%	3.00%	90.608	3.883
11	2	6Y852	24.00	10.67	Gallons	53.00%	0.00%	135.722	0.000
11	2	7219	53.00	6.91	Gallons	72.00%	0.00%	263.686	0.000
11	2	ACETONE	262.40	6.60	Gallons	100.00%	0.00%	1,731.840	0.000
11	2	E60WL510	150.00	12.50	Gallons	0.98%	0.00%	18.356	0.000
11	2	E60YL502	110.00	12.15	Gallons	0.98%	0.00%	13.098	0.000
11	2	NBUTYLACETATE	88.00	7.31	Gallons	100.00%	0.00%	643.280	0.000
11	2	P63YL0002	2,600.00	8.82	Gallons	42.70%	3.50%	9,791.964	802.620
11	2	P65RL0001	159.00	7.82	Gallons	58.70%	4.20%	729.864	52.222
11	2	P65WL0004	1,938.00	8.72	Gallons	50.60%	5.20%	8,551.076	878.767
11	2	P65YL0001	600.00	8.05	Gallons	56.40%	4.20%	2,724.120	202.860
11	2	T75CH46	84.80	7.71	Gallons	67.60%	0.00%	441.974	0.000
11	3	E60WV504	14,487.00	12.69	Pounds	1.00%	0.00%	144.870	0.000
11	4	X-C100Y	276.00	10.60	Pounds	0.00%	0.00%	0.000	0.000
11	4	X-CHEM-BUSAN112	4,415.00	7.60	Pounds	0.72%	7.22%	31.907	318.882
11	4	X-CHEM-EXXSOL D	30,119.00	6.45	Pounds	39.07%	0.00%	11,767.493	0.060
11	5	X-WD2403	19,110.40	9.10	Pounds	2.10%	0.01%	400.554	0.956
12	1	1251644	27.00	8.49	Gallons	0.23%	0.00%	0.527	0.000
12	1	1251646	53.00	10.58	Gallons	0.52%	0.00%	2.916	0.000
12	1	2H850	17,000.00	8.60	Pounds	0.00%	0.00%	0.136	0.136
12	1	6B849	1.00	8.82	Gallons	58.84%	0.00%	5.190	0.000

Month	Bld	Woodgrain Item Number	Quantity Used	Weight	Unit of Measure	% VOC by Weight	% HAPs by Weight	Pounds VOC	Pounds HAPs
12	1	ACETONE	10.80	6.60	Gallons	100.00%	0.00%	71.280	0.000
12	1	EEP	4.00	7.91	Gallons	100.00%	0.00%	31.640	0.000
12	1	M768PEL	4,200.00	7.25	Pounds	0.00%	0.00%	0.000	0.000
12	1	NBUTYLACETATE	11.00	7.31	Gallons	100.00%	0.00%	80.410	0.000
12	1	PA310	9,600.00	8.40	Pounds	0.00%	0.00%	0.000	0.000
12	1	T75CH46	31.80	7.71	Gallons	67.60%	0.00%	165.740	0.000
12	2	01031	1,576.00	7.04	Gallons	100.00%	0.00%	11,098.192	0.000
12	2	6B849	4.00	8.82	Gallons	58.84%	0.00%	20.759	0.000
12	2	7219	53.00	6.91	Gallons	72.00%	0.00%	263.686	0.000
12	2	ACETONE	43.20	6.60	Gallons	100.00%	0.00%	285.120	0.000
12	2	CHE-DAP	0.08	18.43	Gallons	0.00%	0.00%	0.000	0.000
12	2	E60WL510	112.00	12.50	Gallons	0.98%	0.00%	13.706	0.000
12	2	EEP	16.00	7.91	Gallons	100.00%	0.00%	126.560	0.000
12	2	NBUTYLACETATE	44.00	7.31	Gallons	100.00%	0.00%	321.640	0.000
12	2	OK412	50.00	16.40	Gallons	0.00%	0.00%	0.000	0.000
12	2	P63YL0002	276.00	8.82	Gallons	42.70%	3.50%	1,039.455	85.201
12	2	P65BL1	53.00	7.64	Gallons	57.50%	5.20%	232.829	21.056
12	2	P65RL0001	265.00	7.82	Gallons	58.70%	4.20%	1,216.440	87.037
12	2	P65WL0004	1,661.00	8.72	Gallons	50.60%	5.20%	7,328.864	753.164
12	2	P65YL0001	801.00	8.05	Gallons	56.40%	4.20%	3,636.700	270.818
12	2	T75CH46	127.20	7.71	Gallons	67.60%	0.00%	662.961	0.000
12	3	E60WV504	32,575.00	12.69	Pounds	1.00%	0.00%	325.750	0.000
12	4	X-C100Y	339.00	10.60	Pounds	0.00%	0.00%	0.000	0.000
12	4	X-CHEM-BUSAN112	6,026.00	7.60	Pounds	0.72%	7.22%	43.549	435.239
12	4	X-CHEM-EXXSOL D	46,267.00	6.45	Pounds	39.07%	0.00%	18,076.517	0.093
12	5	X-WD2403	26,586.40	9.10	Pounds	2.10%	0.01%	557.251	1.329

TIER I ANNUAL COMPLIANCE CERTIFICATION TABLE

FORM AQ-C2

+

Facility/Permittee Name: Woodgrain Millwork, Inc.

Facility Location: Fruitland, ID

AIRS Facility No.: 075-00001

Tier I Operating Permit No.: 075-00001

Issuance Date: December 11, 2002

Compliance Reporting Period: Dec. 11, 2002 - 0Present

1 Permit Condition	2 Compliance Determination Methods	3 Monitoring Frequency C[1], I[2], or N/A[3]	4 Deviations and Excess Emission Events	5 Permit Condition Compliance Status C[1] / I[2]	6 Attachment
1	Tier I Operating Permit Scope	N/A	N/A	N/A	
1.1	This Tier I operating Permit establishes facility-wide requirements in accordance with the Idaho State Implementation Plan control strategy and the *Rules*.	N/A	N/A	N/A	
1.2	This Tier I permit incorporates the following permits: Tier II No. T2-020024, issued 7/06/07	N/A	N/A	N/A	
1.3	This Tier I renewal/modification supersedes the following permit(s): Tier I #075-00001, issued 12/11/02	N/A	N/A	N/A	
1.4	Table 1.1 lists all sources of emissions regulated in this Tier I operating permit	N/A	NA	N/A	
2	Facility-Wide Conditions Table 2.1 Facility Wide Applicable Requirements Summary	N/A	N/A	N/A	

[1] C = Continuous [2] I = Intermittent [3] N/A = Not Applicable

TIER I ANNUAL COMPLIANCE CERTIFICATION TABLE

FORM AQ-C2

1 Permit Condition	2 Compliance Determination Methods	3 Monitoring Frequency C[1], I[2], or N/A[3]	4 Deviations and Excess Emission Events	5 Permit Condition Compliance Status C[1] / I[2]	Attachment
2.1	All reasonable precautions shall be taken to prevent PM from becoming airborne in accordance with IDAPA 58.01.01.650-651.	C	No Deviations, all records maintained on site and available upon request.	C	
2.2	The permittee shall monitor and maintain records of the frequency and method(s) used (i.e., water, chemical dust suppressants, etc.) to reasonably control fugitive dust emissions	C	No Deviations, all records maintained on site and available upon request.	C	
2.3	The permittee shall maintain records of all Fugitive dust complaints received. Permittee shall take appropriate corrective action as expeditiously as practicable after receipt of a valid complaint. The records shall include, at a minimum, the date that each complaint was received and a description of the following: the complaint, the permittee's assessment of the validity of the complaint, any corrective action taken, and the date the corrective action was taken.	C	No Deviations, Records Maintained on site and available upon request.	C	
2.4	The permittee shall conduct a quarterly facility-wide inspection of potential sources of fugitive dust emissions, during daylight hours and under normal operating conditions, to ensure that the methods used to reasonably control fugitive dust emissions are effective. If fugitive dust emissions are not being reasonably controlled, the permittee shall take corrective action as expeditiously as practicable. The permittee shall maintain records of the results of each fugitive dust emissions inspection. The records shall include, at a minimum, the date of each inspection and a description of the following: the permittee's assessment of the conditions existing at the time fugitive emissions were present (if observed), any corrective action taken in response to the fugitive dust emissions, and the date the corrective action was taken.	C	No Deviations, all records maintained on site and available upon request.	C	
2.5	The permittee shall not allow, suffer, cause or permit the emission or odorous gases, liquids, or solids to the atmosphere in such quantities as to cause air pollution.	C	No Deviations, all records maintained on site and available upon request.	C	
2.6	The Permittee shall maintain records of all odor complaints received. If the complaint has merit, the permittee shall take appropriate corrective action as expeditiously as practicable. The records shall include, at a minimum, the date each complaint was received and a description of the following: the complaint, the permittee's assessment of the validity of the complaint, any corrective action taken, and the date the corrective action was taken.	C	No Deviations, all records maintained on site and available upon request.	C	

[1] C = Continuous [2] I = Intermittent [3] N/A = Not Applicable

TIER I ANNUAL COMPLIANCE CERTIFICATION TABLE

FORM AQ-C2

1 Permit Condition	2 Compliance Determination Methods	3 Monitoring Frequency C[1], I[2], or N/A[3]	4 Deviations and Excess Emission Events	5 Permit Condition Compliance Status C[1] / I[2]	Attachment
2.7	The permittee shall not discharge any air pollutant to the atmosphere from any point of emission for a period or periods aggregating more than three minutes in any 60-minute period which is greater than 20% opacity as determined by procedures contained in IDAPA 58.01.01.625. These provisions shall not apply when the presence of uncombined water, nitrogen oxides, and/or chlorine gas is the only reason for the failure of the emission to comply with the requirements of this section.	C	No Deviations, all records maintained on site and available upon request.	C	
2.8	The permittee shall conduct a quarterly facility-wide inspection of potential sources of visible emissions during daylight hours and under normal operating conditions. The inspection shall consist of a see/no see evaluation for each potential source of visible emissions. If any visible emissions are present from any point of emission, the permittee shall either take appropriate corrective action as expeditiously as practicable, or perform a Method 9 opacity test in accordance with the procedures outlined in IDAPA 58.01.01.625. A minimum of 30 observations shall be recorded when conducting the opacity test. If opacity is more than 20% for a period or periods aggregating more than three minutes in any 60-minute period, the permittee shall take all necessary corrective action and report the exceedance in its annual compliance certification and in accordance with IDAPA 58.01.01.130-136. The permittee shall maintain records of the results of each visible emission inspection and each opacity test when conducted. The records shall include, at a minimum, the date and results of each inspection and test and a description of the following: the permittee's assessment of the conditions existing at the time visible emissions are present (if observed), any corrective action taken in response to the visible emissions, and the date corrective action was taken.	C	No Deviations, all records maintained on site and available upon request.	C	
2.9	The permittee shall comply with the procedures and requirements of IDAPA 58.01.01.130-136 for excess emissions. The provisions of IDAPA 58.01.01.130-136 shall govern in the event of conflicts between Permit Condition 2.9 and the regulations of IDAPA 58.01.01.130-136.	C	No Excess emissions.	C	
2.9.1	The person responsible for, or in charge of, a facility during an excess emissions event shall, with all practical speed, initiate and complete appropriate and reasonable action to correct the conditions causing such excess emissions event, to reduce the frequency of occurrence of such events, to minimize the amount by which the emission standard is exceeded; and shall, as provided below or upon request of DEQ, submit a full report of such occurrence, including a statement of all known causes, and of the scheduling and nature of the actions to be taken .	N/A	No Excess Emissions.	C	

[1] C = Continuous [2] I = Intermittent [3] N/A = Not Applicable

TIER I ANNUAL COMPLIANCE CERTIFICATION TABLE

FORM AQ-C2

1 Permit Condition	2 Compliance Determination Methods	3 Monitoring Frequency C[1], I[2], or N/A[3]	4 Deviations and Excess Emission Events	5 Permit Condition Compliance Status C[1] / I[2]	Attachment
2.9.2	In all cases where startup, shutdown, or scheduled maintenance of any equipment or emission unit is expected to result or results in an excess emissions event, the owner or operator of the facility or emissions unit generating the excess emissions shall demonstrate compliance with IDAPA 58.01.01.133.01(a) through (d), including but not limited to the following: • A prohibition of any scheduled startup, shutdown, or maintenance resulting in excess emissions shall occur during any period in which an Atmospheric stagnation Advisory or a Wood Stove Curtailment Advisory has been declared by DEQ. • Notifying DEQ of the excess emissions event as soon as reasonably possible, but no later than two hours prior to, the start of the event, unless the owner or operator demonstrates to DEQ's satisfaction that a shorter advance notice was necessary. • The owner or operator of a source of excess emissions shall report and record the information required pursuant to Permit Conditions 2.9.4 and 2.9.5 and IDAPA 58.01.01.135 and 136 for each excess emissions event due to startup, shutdown, or scheduled maintenance.	N/A	No Excess Emissions.	C	
2.9.3	In all cases where upset or breakdown of equipment or an emissions unit, or the initiation of safety measures, results in an excess emissions event, the owner or operator of the facility or emissions unit generating the excess shall demonstrate compliance with IDAPA 58.01.01.134.01(a) and (b) and the following.	N/A	No Excess Emissions	C	

[1] C = Continuous [2] I = Intermittent [3] N/A = Not Applicable

TIER I ANNUAL COMPLIANCE CERTIFICATION TABLE

FORM AQ-C2

1 Permit Condition	2 Compliance Determination Methods	3 Monitoring Frequency C[1], I[2], or N/A[3]	4 Deviations and Excess Emission Events	5 Permit Condition Compliance Status C[1] / I[2]	Attachment
2.9.3.1	For all equipment or emissions units from which excess emissions result during upset or breakdown conditions, or for other situations that may necessitate the implementation of safety measures which cause excess emissions, the facility owner or operator shall comply with the following: • The owner or operator shall immediately undertake all appropriate measures to reduce and to the extent possible eliminate excess emissions resulting from the event and to minimize the impact of such excess emissions on the ambient air quality and public health. • The owner or operator shall notify DEQ of any upset, breakdown, or safety event that results in excess emissions. Such notification shall identify the time, specific location, equipment or emissions unit involved, and (to the extent known) the cause(s) of the occurrence. The notification shall be given as soon as reasonably possible, but no later than 24 hours after the event, unless the owner or operator demonstrates to DEQ's satisfaction that the longer reporting period was necessary. • The owner or operator shall report and record the information required pursuant to Permit Conditions 2.9.4 and 2.9.5 and IDAPA 58.01.01.135 and 136 for each excess emissions event caused by an upset, breakdown, or safety measure.	N/A	No Excess Emissions	C	
2.9.3.2	During any period of excess emissions caused by upset, breakdown, or operation under facility safety measures, DEQ may require the owner or operator to immediately reduce or cease operation of the equipment or emissions unit causing the excess emissions until such time as the condition causing the excess emissions has been corrected or brought under control. Such action by DEQ shall be taken upon consideration of the factors listed in IDAPA 58.01.01.134.03 and after consultation with the facility owner or operator.	N/A	No Excess Emissions	C	
2.9.4	A written report for each excess emissions event shall be submitted to the Department by the owner or operator no later than 15 days after the beginning of such an event. Each report shall contain the information specified in IDAPA 58.01.01.135.02.	N/A	No Excess Emissions	C	

[1] C = Continuous [2] I = Intermittent [3] N/A = Not Applicable

TIER I ANNUAL COMPLIANCE CERTIFICATION TABLE

FORM AQ-C2

1 Permit Condition	2 Compliance Determination Methods	3 Monitoring Frequency C[1], I[2], or N/A[3]	4 Deviations and Excess Emission Events	5 Permit Condition Compliance Status C[1] / I[2]	Attachment
2.9.5	The owner or operator shall maintain excess emissions records at the facility for the most recent five-calendar-year period. The excess emissions records shall be made available to DEQ upon request and shall include the information requested by IDAPA 58.01.01.136.03(a) and (b) as summarized in the following: • An excess emissions record book for each emissions unit or piece of equipment containing copies of all reports that have been submitted to DEQ pursuant to IDAPA 58.01.01.135 for the particular emissions unit or equipment; and • Copies of all startup, shutdown, and scheduled maintenance procedures and upset, breakdown, or safety preventative maintenance plans that have been developed by the owner or operator in accordance with IDAPA 58.01.01.133 and 134, and facility records as necessary to demonstrate compliance with such procedures and plans.	C	Records will be kept on-site for any excess emission event.	C	

[1] C = Continuous [2] I = Intermittent [3] N/A = Not Applicable

TIER I ANNUAL COMPLIANCE CERTIFICATION TABLE

FORM AQ-C2

1 Permit Condition	2 Compliance Determination Methods	3 Monitoring Frequency C[1], I[2], or N/A[3]	4 Deviations and Excess Emission Events	5 Permit Condition Compliance Status C[1] / I[2]	Attachment
2.10	If performance testing is required, the permittee shall provide notice of intent to test to DEQ at least 15 days prior to the scheduled test or shorter time period as provided in a permit, order, consent decree, or by DEQ approval. DEQ may, at its option, have an observer present at any emission tests conducted on a source. DEQ requests such testing not be performed on weekends or state holidays. All testing shall be conducted in accordance with the procedures in IDAPA 58.01.01.157. Without prior DEQ approval, any alternative testing is conducted solely at the permittee's risk. If the permittee fails to obtain prior written approval by DEQ for any testing deviations, DEQ may determine that the testing does not satisfy the testing requirements. Therefore, prior to conducting any performance test, the permittee is encouraged to submit in writing to DEQ, at least 30 days in advance, the following for approval: • The type of method to be used • Any extenuating or unusual circumstances regarding the proposed test • The proposed schedule for conducting and reporting the test The permittee shall submit a compliance test report for the respective test to DEQ within 30 days following the date in which a compliance test required by this permit is concluded. The compliance test report shall include all process operating data collected shall include all process operating data collected during the test period as well as the test results, raw test data, and associated documentation, including any approved test protocol. The proposed test date(s), test date rescheduling notice(s), compliance test report, and all other correspondence shall be sent to the following address: Air Quality Permit Compliance Department of Environmental Quality Boise Regional Office 1445 N. Orchard Boise, Idaho 83706 Phone: (208) 373-0550 Fax: (208) 373-0287	N/A		C	

[1] C = Continuous [2] I = Intermittent [3] N/A = Not Applicable

TIER I ANNUAL COMPLIANCE CERTIFICATION TABLE

FORM AQ-C2

1 Permit Condition	2 Compliance Determination Methods	3 Monitoring Frequency C[1], I[2], or N/A[3]	4 Deviations and Excess Emission Events	5 Permit Condition Compliance Status C[1] / I[2]	Attachment
2.11	The permittee shall maintain sufficient records to assure compliance with all of the terms and conditions of this operating permit. Records of monitoring information shall include, but not be limited to, the following: (a) the date, place, and times of sampling or measurements; (b) the date analyses were performed; (c) the company or entity that performed the analyses; (d) the analytical techniques or methods used; (e) the results of such analyses; and (f) the operating conditions existing at the time of sampling or measurement. All monitoring records and support information shall be retained for a period of at least five years from the date of the monitoring sample, measurement, report, or application. Supporting information includes, but is not limited to, all calibration and maintenance records, all original strip-chart recordings for continuous monitoring instrumentation, and copies of all reports required by this permit. All records required to be maintained by this permit shall be made available in either hard copy or electronic format to DEQ representatives upon request.	N/A	No Renovation or Demolition has taken place in areas with Asbestos.	C	
2.12	All periodic reports and certifications required by this permit shall be submitted to DEQ within 30 days of the end of each specified reporting period. Excess emissions reports and notifications shall be submitted in accordance with IDAPA 58.01.01.130-136. Reports, certifications, and notifications shall be submitted to: Air Quality Permit Compliance Department of Environmental Quality Boise Regional Office 1445 N. Orchard Boise, Idaho 83706 Phone: (208) 373-0550 Fax: (208) 373-0287 The periodic compliance certification required by General Provision 21 shall also be submitted within 30 days of the end of the specified reporting period to: EPA Region 10 Air Operating Permits, OAQ-107 1200 Sixth Avenue Seattle, WA 98101	N/A	The Facility maintains a Emergency Response Plan and has an onsite Haz-Mat team	C	
2.13	The permittee shall not discharge PM to the atmosphere from any fuel-burning equipment in excess of 0.015 gr/dscf of effluent gas corrected to 3% oxygen by volume for liquid, 0.050 gr/dcsf of effluent gas corrected to 8% oxygen by volume for coal, and 0.080 gr/dscf of effluent gas corrected to 8% oxygen by volume for wood products.	N/A	No emissions testing have been required to date.	C	

[1] C = Continuous [2] I = Intermittent [3] N/A = Not Applicable

TIER I ANNUAL COMPLIANCE CERTIFICATION TABLE

FORM AQ-C2

1 Permit Condition	2 Compliance Determination Methods	3 Monitoring Frequency C[1], I[2], or N/A[3]	4 Deviations and Excess Emission Events	5 Permit Condition Compliance Status C[1] / I[2]	Attachment
2.14	The permittee shall not sell, distribute, use, or make available for use any distillate fuel oil containing more than the following percentages of sulfur: • ASTM Grade 1 fuel oil – 0.3% by weight. • ASGM Grade 2 fuel oil – 0.5% by weight.	N/A	No emissions testing have been required to date.	C	
2.14.1	The permittee shall maintain documentation of supplier verification of distillate fuel oil content on an as-received basis.				
2.15	The permittee shall comply with the *Rules for Control of Open Burning*.	C	All necessary records etc. are mainlined on site.	C	
2.16	The permittee shall comply with all applicable portions of 40 CFR 61, Subpart M, when conducting any renovation or demolition activities at the facility.	C	This Annual Report meets permit condition 2.16. No Deviations.	C	
2.17	An owner or operator of a stationary source that has more than a threshold quantity of a regulated substance in a process, as determined under 40 CFR 68.115, shall comply with the requirements of the Chemical Accident Prevention Provisions at 40 CFR 68 no later than the latest of the following dates: • Three years after the date on which a regulated substance present above a threshold quantity is first listed under 40 CFR 68.130. • The date on which a regulated substance is first present above a threshold quantity in a process.	C	All fuel burning equipment meets this requirement	C	
2.18	The permittee shall comply with applicable standards for recycling and emissions reduction pursuant to 40 CFR 82, Subpart F, Recycling and Emissions Reduction	C	All Fuel oil on site is compliant with this rule	C	
2.21	The permittee shall comply with applicable standards for recycling and emissions reduction pursuant to 40 CFR 82, Subpart F, Recycling and Emission Reductions.	C	Licensed contractors maintain all units.	C	

[1] C = Continuous [2] I = Intermittent [3] N/A = Not Applicable

TIER I ANNUAL COMPLIANCE CERTIFICATION TABLE

FORM AQ-C2

1 Permit Condition	2 Compliance Determination Methods	3 Monitoring Frequency C[1], I[2], or N/A[3]	4 Deviations and Excess Emission Events	5 Permit Condition Compliance Status C[1] / I[2]	Attachment
3	The following is a narrative description of the wood processing and handling operations regulated in this Tier I operating permit. This description is for informational purposes only. This emission unit consists of the wood processing and handling operations for the following manufacturing areas at the Fruitland facility: Prefinish (Coatings, Wrap) and Millwork (Optimization, DecraMold, Animal Bedding, Bailing, Woodtreat, and Storage). Wood processing consists of cutting, moulding, shaping, and joining of wood. Wood processing also consists of wood treatment for fungicide, basecoat application, painting, lamination, and hammer hog processing of scrap materials. Wood handling also consists of the transfer of sawdust and shavings by pneumatic conveyance and drop transfers for the following process areas: Prefinish and Millwork. Wood processing consists of cutting, joining of wood, moulding, and shaping. Table 3.1 WOOD PROCESSING AND HANDLING EQUIPMENT DESCRIPTION Emission Unit(s) / Process(es) — Emissions Control Device — Emissions Point Millwork Cyclone B — Uncontrolled — Cyclone B Stack Millwork Cyclone C — Uncontrolled — Cyclone C Stack Millwork Cyclone I — Uncontrolled — Cyclone I Stack Millwork Baghouse G — Uncontrolled — Baghouse G Stack Millwork Baghouse E — Uncontrolled — Baghouse E Stack Millwork Cyclone J — Uncontrolled — Cyclone J Stack Millwork Cyclone K — Uncontrolled — Cyclone K Stack Millwork Baghouse L — Uncontrolled — Baghouse L Stack Millwork/Optimizing Baghouse M — Uncontrolled — Baghouse M Stack Millwork Cyclone D — Uncontrolled — Millwork D Stack DecraMold Cyclone H — Uncontrolled — Cyclone H Stack Emission Unit – Dimensional Lumber – Optimizer, Unit description and list of applicable Requirements	N/A	N/A	N/A	

[1] C = Continuous [2] I = Intermittent [3] N/A = Not Applicable

TIER I ANNUAL COMPLIANCE CERTIFICATION TABLE

FORM AQ-C2

1 Permit Condition	2 Compliance Determination Methods	3 Monitoring Frequency C[1], I[2], or N/A[3]	4 Deviations and Excess Emission Events	5 Permit Condition Compliance Status C[1] / I[2]	Attachment
3.1	The permittee shall comply with the visible emission requirements of Permit Condition 2.7.	N/A		C	
3.2	At all times when operating the Prefinish and Millwork processes, the permittee shall operate the wood processing and handling equipment listed in Table 3.1 of Permit Condition 3.1	N/A		C	
4	The following is a narrative description of the coating and gluing operations regulated in this Tier I operating permit. This description is for information purposes only. This process consists of coating and gluing operations for the following manufacturing areas at the Fruitland facility: Prefinish and Millwork – Woodtreat. Coating and gluing consists of roll coating, fan coating, curtain coating, gluing, and wood treatment operations at the facility. VOC emissions are uncontrolled. HAP emissions are controlled by limiting the HAP content of coatings, thinners, and cleaning materials used in the coating and gluing operation.	N/A	N/A	N/A	
4.1	• Emissions of any single HAP from the entire facility shall not exceed 10 tons per any consecutive 12-calendar month period. • Emissions of any combination of HAP's from the entire facility shall not exceed 25 tons per any consecutive 12-calendar month period. • Emissions of acetaldehyde from the entire facility shall be less than 0.148 lbs/hr. • Emissions of formaldehyde from the entire facility shall be less than 0.048 lbs/hr.	N/A		N/A	
4.2	Emissions of VOC's from the entire facility shall not exceed 813.6 tons per year.	N/A		N/A	
4.3	On and after the compliance date specified in 40 CFR 63.4683, the permittee shall comply with the applicable emission limitations, operating limitations and work practice standard of 40 CFR 63, Subpart QQQQ. Please refer to the following sections of the rule: • Emission Limitations: 40 CFR 63.4690 • Compliance Options to Meet the Emission Limitations: 40 CFR 63.4691	N/A		N/A	

[1] C = Continuous [2] I = Intermittent [3] N/A = Not Applicable

TIER I ANNUAL COMPLIANCE CERTIFICATION TABLE

FORM AQ-C2

1 Permit Condition	2 Compliance Determination Methods	3 Monitoring Frequency C[1], I[2], or N/A[3]	4 Deviations and Excess Emission Events	5 Permit Condition Compliance Status C[1] / I[2]	Attachment
4.4	On and after the compliance date specified in 40 CFR 63.4683, the permittee shall comply with the applicable general requirements and general provision of 40 CFR 63, Subpart QQQQ. Please refer to the following sections of the rule: • General requirements: 40 CFR 63.4700 • General provisions: 40 CFR 63, Subpart QQQQ, Table 4	C	No Deviations, Compliance shown through condition 2.8, quarterly monitoring	C	
4.5	On and after the compliance date specified in 40 CFR 63.4683, the permittee shall comply with the applicable compliance demonstration requirements for the compliant material option of 40 CFR 63, Subpart QQQQ. Please refer to the following sections of the rule: • Initial Compliance Demonstration Date: 40 CFR 63.4740 • Initial Compliance Demonstration Requirements: 40 CFR 63.4741 • Continuous Compliance Demonstration Requirements: 40 CFR 63.4742	N/A	N/A	N/A	
4.6	On and after the compliance date specified in 40 CFR 63.4683, the permittee shall comply with the applicable compliance demonstration requirements for the emission rate without add-on controls option of 40 CFR 63, Subpart QQQQ. Please refer to the following sections of the rule: • Initial Compliance Demonstration Date: 40 CFR 63.4750 • Initial Compliance Demonstration Requirements: 40 CFR 63.4751 • Continuous Compliance Demonstration Requirements: 40 CFR 63.4752	N/A	No Deviations, Total Bales for 2006 = 427,865. The Daily Average for 2006 was 1,426 bales/day.	C	
4.7	• The permittee shall maintain the purchase records of all manufacturing-related materials that contain HAP's including, but not limited to, adhesives, caulks, solvents, and paints. • The permittee shall maintain the purchase records of all manufacturing-related materials that contain VOC's including, but not limited to, adhesives, caulks, solvents, and paints.	C	No Deviations, all records maintained on site and available upon request.	C	

[1] C = Continuous [2] I = Intermittent [3] N/A = Not Applicable

TIER I ANNUAL COMPLIANCE CERTIFICATION TABLE

FORM AQ-C2

1 Permit Condition	2 Compliance Determination Methods	3 Monitoring Frequency C[1], I[2], or N/A[3]	4 Deviations and Excess Emission Events	5 Permit Condition Compliance Status C[1] / I[2]	Attachment
4.8	• The permittee shall maintain the MSDS' for the manufacturing-related materials that contain HAP's purchased pursuant to Permit Condition 4.7. The MSDS' shall remain on site at all times and shall be made available to DEQ representatives upon request. • The permittee shall maintain the MSDS' for the manufacturing-related materials that contain VOC's purchased pursuant to Permit Condition 4.7. The MSDS' shall remain on site at all times and shall be made available to DEQ representatives upon request.				
4.9	• The permittee shall monitor and record monthly the usage of each manufacturing-related material that contains HAP's. The usage records shall remain on site for the most recent two-year period and shall be made available to DEQ representatives upon request. • The permittee shall monitor and record monthly the usage of each manufacturing-related material that contains VOC's. The usage records shall remain on site for the most recent two-year period and shall be made available to DEQ representatives upon request.				
4.10	The permittee shall monitor and record the monthly and annual VOC emissions from the process using the purchase records required by Permit Condition 4.7, the MSDS' required by Permit Condition 4.8, and the material usage records required by Permit Condition 4.9 to demonstrate compliance with Permit Condition 4.2. Annual VOC emissions shall be determined by summing monthly VOC emissions over the previous consecutive 12-month period. Records of this information shall be maintained on site for the most recent two-year period and shall be made available to DEQ representatives upon request.				
4.11	The permittee shall monitor and record the monthly and annual HAP emissions from the process using the purchase records required by Permit Condition 4.7, the MSDS' required by Permit Condition 4.8, and the material usage records required by Permit Condition 4.9 to demonstrate compliance with Permit Condition 4.1. Annual HAP emissions shall be determined by summing monthly HAP emissions over the previous consecutive 12-month period. Records of this information shall be maintained on site for the most recent two-				
4.12	On and after the compliance date specified in 40 CFR 63.4683, the permittee shall comply with the applicable notification, reporting and recordkeeping requirements of 40 CFR 63, Subpart QQQQ. Please refer to the following sections of the rule: • Submittal of Notifications: 40 CFR 63.4710 • Submittal of Reports: 40 CFR 63.4720 • Records Retention: 40 CFR 63.4730-4731				

[1] C = Continuous [2] I = Intermittent [3] N/A = Not Applicable

TIER I ANNUAL COMPLIANCE CERTIFICATION TABLE

FORM AQ-C2

1 Permit Condition	2 Compliance Determination Methods	3 Monitoring Frequency C[1], I[2], or N/A[3]	4 Deviations and Excess Emission Events	5 Permit Condition Compliance Status C[1] / I[2]	Attachment
5	The following is a narrative description of the printing operations regulated in this Tier I operating permit. This description is for informational purposes only. This emission unit consists of the printing operations at the Fruitland facility. Printing consists of product rotogravure printing of substrate which is applied to products manufactured at facility. VOC and HAP emissions from the printing process are uncontrolled.	N/A	N/A	N/A	
5.1	Emissions of VOC's from the entire facility shall not exceed 813.6 tons per year.	C	No Deviations,	C	
5.2	• Emissions of any single HAP from the entire facility shall not exceed 10 tons per any consecutive 12-calendar month period. • Emissions of any combination of HAP's from the entire facility shall not exceed 25 tons per any consecutive 12-calendar month period. • Emissions of acetaldehyde from the entire facility shall be less than 0.148 lbs/hr. • Emissions of formaldehyde from the entire facility shall be less than 0.048 lbs/hr.	N/A	Process Unit No. 7 was never installed. Prefinish 2006 VOC emissions were 133.14 lb/hr and 170.85 T/yr.	C	
5.3	On and after the compliance date specified in 40 CFR 63,826, the permittee shall comply with the applicable requirements for product and packaging rotogravure and wide-web flexographic printing of the National Emissions Standards for Hazardous Air Pollutants for the Printing and Publishing Industry, 40 CFR 63, Subpart KK. Please refer to the following sections of the rule: • Standards for Product and packaging rotogravure and wide-web flexographic printing: 40 CFR 63.825	N/A	N/A Process Unit No. 7 was never installed.	N/A	
5.4	On and after the compliance date specified in 40 CFR 63.826, the permittee shall comply with the applicable general requirements of the National Emissions Standards for Hazardous Air Pollutants for the Printing and Publishing Industry, 40 CFR 63, Subpart KK. Please refer to the following sections of the rule: • General Requirements: 40 CFR 63.823	N/A	N/A	N/A	

[1] C = Continuous [2] I = Intermittent [3] N/A = Not Applicable

TIER I ANNUAL COMPLIANCE CERTIFICATION TABLE

FORM AQ-C2

1 Permit Condition	2 Compliance Determination Methods	3 Monitoring Frequency C[1], I[2], or N/A[3]	4 Deviations and Excess Emission Events	5 Permit Condition Compliance Status C[1] / I[2]	Attachment
5.5	The permittee shall maintain the purchase records of all manufacturing-related materials that contain HAP's and VOC's including, but not limited to, adhesives, caulks, degreasers, solvents, and paints. The purchase records shall remain on site for the most recent two-year period and shall be made available to DEQ representatives upon request.	C	No Deviations. 2006 VOC emissions were 0.067 T/hr and 170.85 T/yr	C	
5.6	The permittee shall maintain the MSDS' for the manufacturing-related materials that contain HAP's and VOC's purchased pursuant to Permit Condition 5.5	N/A	N/A Process Unit No. 7 was never installed.	N/A	
5.7	The facility waste stream shall be analyzed using an approved analytical method. The analysis must clearly indicate the volume of the waste stream (gallons), and the VOC and HAP contents (lb/gal) of the waste stream.	N/A	No Deviations. Including the Wrap Department there are less than 40 stations.	C	
5.8	• The permittee shall monitor and record monthly, the usage of each manufacturing-related material that contains HAP's. The usage records shall remain on site for the most recent two-year period and shall be made available to DEQ representatives upon request. • The permittee shall monitor and record monthly, the usage of each manufacturing-related material that contains VOC's. The usage records shall remain on site for the most recent two-year period and shall be made available to DEQ representatives upon request.	C	No Deviations, all records maintained on site and available upon request.	C	
5.9	The permittee shall monitor and record the monthly and annual VOA emissions using the purchase records required by Permit Condition 5.5, the MSDS' required by Permit Condition 5.6, VOC waste stream data required by Permit Condition 5.7 and the material usage records required by Permit Condition 5.8 to demonstrate compliance with Permit Condition 5.1. Annual VOC emissions shall be determined by summing monthly VOC emissions over the previous consecutive 12-month period. Records of this information shall be maintained on site for the most recent two-year period and shall be made available to DEQ representatives upon request.	C	No Deviations, all records maintained on site and available upon request.	C	

[1] C = Continuous [2] I = Intermittent [3] N/A = Not Applicable

TIER I ANNUAL COMPLIANCE CERTIFICATION TABLE

FORM AQ-C2

1 Permit Condition	2 Compliance Determination Methods	3 Monitoring Frequency C[1], I[2], or N/A[3]	4 Deviations and Excess Emission Events	5 Permit Condition Compliance Status C[1] / I[2]	Attachment
5.10	The permittee shall monitor and record the monthly and annual HAP emissions using the purchase records required by Permit Condition 5.5, the MSDS' required by Permit Condition 5.6, HAP waste stream data required by Permit Condition 5.7 and the material usage records required by Permit Condition 5.8 to demonstrate compliance with Permit Condition 5.2. Annual HAP emissions shall be determined by summing monthly HAP emissions over the previous consecutive 12-month period. Records of this information shall be maintained on site for the most recent two-year period and shall be made available to DEQ representatives upon request.	C	No Deviations, all records maintained on site and available upon request.	C	
5.11	On and after the compliance date specified in 40 CFR 63.826, the permittee shall comply with the applicable requirements for performance test methods, monitoring, recordkeeping and reporting of the National Emissions Standards for Hazardous Air Pollutants for the Printing and Publishing Industry, 40 CFR 63, Subpart KK. Please refer to the following sections of the rule: • Performance Test Methods: 40 CFR 63.827 • Monitoring: 40 CFR 63.828 • Recordkeeping: 40 CFR 63.829 • Reporting: 40 CFR 63.830	N/A	N/A	N/A	
6	Activities and emission units identified as insignificant under IDAPA 58.01.01.317.01(b) are listed in the Tier I operating permit to qualify for a permit shield. **Table 6.1 INSIGNIFICANT ACTIVITIES** **Description** / **Insignificant Activities IDAPA 58.01.01.317.01(b)(I) Citation** Operation of Tanks less than 260 gallon capacity — IDAPA 58.01.01.317.01.b.I(1) Operation of Tanks less than 1,150 gallon capacity — IDAPA 58.01.01.317.01.b.i.(2)	N/A	N/A	N/A	

[1] C = Continuous [2] I = Intermittent [3] N/A = Not Applicable

TIER I ANNUAL COMPLIANCE CERTIFICATION TABLE

FORM AQ-C2

1 Permit Condition	2 Compliance Determination Methods		3 Monitoring Frequency C[1], I[2], or N/A[3]	4 Deviations and Excess Emission Events	5 Permit Condition Compliance Status C[1] / I[2]	Attachment
	Operation of Tanks less than 10,000 gallon capacity	IDAPA 58.01.01.317.01.b.i.(3)				
	Operation of Propane Tank less than 40,000 gallon capacity	IDAPA 58.01.01.317.01.b.i.(4)				
	Batch solvent distillation, not greater than fifty-five (55) gallons batch capacity	IDAPA 58.01.01.317.01.b.i.(15)				
	Space heaters and hot water heaters using natural gas, propane or kerosene and generating less than five million (5,000,000) Btu/hr.	IDAPA 58.01.01.317.01.b.i.(18)				
	Surface coating, aqueous solution or suspension containing less than one percent (1%) volatile organic compounds.	IDAPA 58.01.01.317.01.b.i.(25)				
	Emission units or activities with potential emissions less than or equal to the significant emission rate as defined in Section 006 and actual emissions less than or equal to ten percent (10%) of the levels contained in Section 006 of the definition of significant and no more than one (1) ton per year of any hazardous air pollutant.	IDAPA 58.01.01.317.01.b.i.(30)				
	Welding	IDAPA 58.01.01.317.01.b.i.(9)				
	Storage and handling of water-based lubricants for metalworking.	IDAPA 58.01.01.317.01.b.i.(27)				
	Compliance Schedule, description and summary table.					
6.1	There are no monitoring, recordkeeping, or reporting requirements for insignificant emission units or activities beyond those required in the Facility-wide Permit Conditions.		N/A	N/A	N/A	
7	Tier I Operating Permit General Provisions.		N/A	N/A	N/A	
7.1	The permittee shall comply with all conditions of this permit. Any permit noncompliance constitutes a violation and is grounds for enforcement action; for permit termination, revocation and reissuance, or revision; or for denial of a permit renewal application.		N/A	N/A	N/A	

[1] C = Continuous [2] I = Intermittent [3] N/A = Not Applicable

TIER I ANNUAL COMPLIANCE CERTIFICATION TABLE

FORM AQ-C2

1 Permit Condition	2 Compliance Determination Methods	3 Monitoring Frequency C[1], I[2], or N/A[3]	4 Deviations and Excess Emission Events	5 Permit Condition Compliance Status C[1] / I[2]	Attachment
7.2	It shall not be a defense in an enforcement action that it would have been necessary to halt or reduce the permitted activity in order to maintain compliance with the terms and conditions of this permit.				
7.3	Any permittee who fails to submit any relevant facts or who has submitted incorrect information in a permit application shall, upon becoming aware of such failure or incorrect submittal, promptly submit such supplementary facts or corrected information.				
7.4	This permit may be revised, reopened, revoked and reissued, or terminated for cause. Cause for reopening exists under any of the circumstances listed in IDAPA 58.01.01.386. Proceedings to reopen and reissue a permit shall follow the same procedures as apply to initial permit issuance and shall affect only those parts of the permit for which cause to reopen exists. Such reopening shall be made as expeditiously as practicable in accordance with IDAPA 58.01.01.360 through 369.				
7.5	The filling of a request by the permittee for a permit revision, revocation and reissuance, or termination, or of a notification of planned changes or anticipated noncompliance does not stay any permit condition.				
7.6	This permit does not convey any property rights of any sort, or any exclusive privilege.				
7.7	The permittee shall furnish all information requested by DEQ, within a reasonable time, that DEQ may request in writing to determine whether cause exists for modifying, revoking and reissuing, or terminating the permit or to determine compliance with the permit.				
7.8	Upon request, the permittee shall furnish to DEQ copies of records required to be kept by this permit. For information claimed to be confidential, the permittee may furnish such records along with a claim of confidentiality in accordance with Idaho Code §39-342A and applicable implementing regulations including IDAPA 58.01.01.128.	N/A	N/A	N/A	
7.9	The provisions of this permit are severable, and if any provision of this permit to any circumstance is held invalid, the application of such provision to other circumstances, and the remainder of this permit shall not be affected thereby.	N/A	N/A	N/A	
7.10	Permittee may not commence construction without first obtaining all necessary permits to construct or an approval under IDAPA 58.01.01.213 or complying with IDAPA 58.01.01.220-223. The permittee shall comply with IDAPA 58.01.01.380-386 as applicable.	N/A	N/A	N/A	
7.11	Changes that are not addressed or prohibited by the Tier I operating permit require a Tier I operating permit revision if such changes are subject to any requirement under Title IV of the CAA, 42 U.S.C. Section 7651 through 7651c or are modifications under Title I of the CAA, 42 U.S.C. Section 7401 through 7515...	N/A	N/A	N/A	

[1] C = Continuous [2] I = Intermittent [3] N/A = Not Applicable

TIER I ANNUAL COMPLIANCE CERTIFICATION TABLE

FORM AQ-C2

1 Permit Condition	2 Compliance Determination Methods	3 Monitoring Frequency C[1], I[2], or N/A[3]	4 Deviations and Excess Emission Events	5 Permit Condition Compliance Status C[1] / I[2]	Attachment
7.12	Unless specifically identified as a "State-only" provision, all terms and conditions in this permit are enforceable: (i) by the Department in accordance with state law; and (ii) by the United States or any other person in accordance with federal law.	N/A	N/A	N/A	
7.13	Provisions specifically identified as a "State-only" provision are enforceable only in accordance with state law.	N/A	N/A	N/A	
7.14	Upon presentation of credentials, the permittee shall allow the Department or an authorized representative of the Department to do the following: a. Enter the premises, where a Tier I source is located b. Have access to and copy any records that are kept per this permit c. Inspect at reasonable times any facilities, equipment d. Sample or monitor at reasonable times substances or parameters for the purpose of determining or ensuring compliance.	N/A	N/A	N/A	
7.15	Permittee shall comply with applicable requirements that become effective during the permit term on a timely basis.	N/A	N/A	N/A	
7.16	Pay annual Tier I registration fees.	C	N/A	C	
7.17	Documents submitted to the Department shall be certified.	N/A	N/A	N/A	
7.18a	Submit an application for renewal of this permit.	N/A	N/A	N/A	
7.18b	If timely and complete application for renewal is submitted shall remain in effect until the renewal permit has been issued or denied.	N/A	N/A	N/A	
7.19	Compliance with the terms and conditions of the Tier I operating permit shall be deemed compliance with any applicable requirements as of the date of permit issuance, provided that: a. Applicable requirements are included and specifically identified in the Tier I operating permit: or i. Department has determined that other requirements specifically identified are not applicable. b. Permit shield shall apply to permit revision made. c. Nothing in this permit shall alter or affect the following: i. Any administrative authority or judicial remedy available to prevent or terminate emergencies or imminent and substantial dangers: ii. The liability of any owner or operator of a source for any violation of applicable requirements prior to or at the time of permit issuance; iii. The applicable requirements of the acid rain program. iv. The ability of EPA or the Department to obtain information from a source.	N/A	N/A	N/A	

[1] C = Continuous [2] I = Intermittent [3] N/A = Not Applicable

TIER I ANNUAL COMPLIANCE CERTIFICATION TABLE

FORM AQ-C2

1 Permit Condition	2 Compliance Determination Methods	3 Monitoring Frequency C[1], I[2], or N/A[3]	4 Deviations and Excess Emission Events	5 Permit Condition Compliance Status C[1] / I[2]	Attachment
7.2	a. For each applicable requirement for which the source is not in compliance, the permittee shall comply with the compliance schedule incorporated in this permit. b. For each applicable requirement that will become effective during the term of this permit and that provides a detailed compliance schedule, the permittee shall comply with such requirements in accordance with the detailed schedule. c. For each applicable requirement that will become effective during the term of this permit that does not contain a more detailed schedule, the permittee shall comply on a timely basis. d. For each applicable requirement with which the permittee is in compliance, the permittee shall continue to comply with such requirements.	C	No Deviations	C	

[1] C = Continuous [2] I = Intermittent [3] N/A = Not Applicable

TIER I ANNUAL COMPLIANCE CERTIFICATION TABLE

FORM AQ-C2

1 Permit Condition	2 Compliance Determination Methods	3 Monitoring Frequency C[1], I[2], or N/A[3]	4 Deviations and Excess Emission Events	5 Permit Condition Compliance Status C[1] / I[2]	Attachment
7.21	a. Permittee shall submit compliance certifications during the term of the permit for each emission unit to the Department and the EPA as follows: b. Compliance certifications for all emissions units shall be submitted annually beginning 12 months form the permit issuance date, or more frequently if specified. c. Compliance certifications for each emissions unit shall address all of the terms and conditions contained in the Tier I operating permit that are applicable to such emission unit. d. Compliance certification shall be in an itemized form providing the following information. i. Identification of each term or condition of the Tier I operating permit that is the basis of the certification; ii. Identification of the method(s) or other means used by the owner or operator for determining the compliance status with each term and condition during the certification period, and whether such methods or other means provide continuous or intermittent data. Such methods and other means shall include, at a minimum the methods and means required by this Tier I operating permit. If necessary, the owner or operator shall identify any other material information that must be included in the certification to comply with Section 133(c)(2) of the CAA which prohibits knowingly making a false certification or omitting material information: iii. The status of compliance with the terms and conditions of the permit for the period covered by the certification, based on the method or means designated in Paragraph 21.3.2 above. The certification shall identify each deviation and take it into account in the compliance certification. The certification shall also identify as possible exception to compliance any periods during which compliance is required and in which an excursion or exceedance as defined under 40 CFR Part 64 occurred: iv. Such other facts as the Department may require to determine the compliance status of the source. e. All original compliance certifications shall be submitted to the Department and a copy of all compliance certifications shall be submitted to the EPA	C	N/A	C	

[1] C = Continuous [2] I = Intermittent [3] N/A = Not Applicable

TIER I ANNUAL COMPLIANCE CERTIFICATION TABLE

FORM AQ-C2

1 Permit Condition	2 Compliance Determination Methods	3 Monitoring Frequency C[1], I[2], or N/A[3]	4 Deviations and Excess Emission Events	5 Permit Condition Compliance Status C[1] / I[2]	Attachment
7.22	No person shall knowingly make any false statement, representation, or certification in any for, notice, or report required under this permit.	N/A	N/A	N/A	
7.23	No person shall knowingly render inaccurate any monitoring device or method required under this permit.	N/A	N/A	N/A	
7.24	In addition to applicable reporting requirements identified in this permit, the permittee shall submit reports of any required monitoring at least every six months starting six months from the date of permit issuance. The permittee's semiannual reporting periods shall be from January 1 to June 30 and July 1 to December 31. All instances of deviations from the operating permit's requirements must be clearly identified in the report. All required reports must be certified.	C	N/A	C	
7.25	Permittee shall promptly report all deviations from the permit requirements including upset conditions, their probable cause, and any corrective actions or preventive measures taken.	C	N/A	C	
7.26	No permit revision shall be required under any approved economic incentives, marketable permits, emissions trading, and other similar programs or processes for changes that are provided for in the permit.	N/A	N/A	N/A	
7.27	In accordance with IDAPA 58.01.01.332 an "emergency" as defined in IDAPA 58.01.01.008., constitutes an affirmative defense to an action brought for noncompliance with such technology-based emissions limitation if the conditions of IDAPA 58.01.01.332.02 are met.	N/A	N/A	N/A	

[1] C = Continuous [2] I = Intermittent [3] N/A = Not Applicable

DEQ AIR QUALITY PROGRAM
1410 N. Hilton, Boise, ID 83706
For assistance, call the
Air Permit Hotline – 1-877-5PERMIT

AIR PERMIT APPLICATION

Revision 6
10/7/09

For each box in the table below, CTRL+click on the blue underlined text for instructions and information.

IDENTIFICATION	
1. Company Name: Woodgrain Millwork Inc.	2. Facility Name: Fruitland Facility
3. Brief Project Description: Tier I (Title V) Permit Renewal Application - Permit T1-060054 Facility #075-00001	

APPLICABILITY DETERMINATION	
4. List applicable subparts of the New Source Performance Standards (NSPS) (40 CFR part 60). Examples of NSPS affected emissions units include internal combustion engines, boilers, turbines, etc. The applicant must thoroughly review the list of affected emissions units.	List of applicable subpart(s): None ☐ Not Applicable
5. List applicable subpart(s) of the National Emission Standards for Hazardous Air Pollutants (NESHAP) found in 40 CFR part 61 and 40 CFR part 63. Examples of affected emission units include solvent cleaning operations, industrial cooling towers, paint stripping and miscellaneous surface coating. EPA has a web page dedicated to NESHAP that should be useful to applicants.	List of applicable subpart(s): 40 CFR 63 Subpart ZZZZ Listed below with this document is the applical requirments for this unit. Less than 500 hp. Operated less than 500 hours per year, emergency generator. Generator Meets Tier II standards. ☐ Not Applicable
6. For each subpart identified above, conduct a complete a regulatory analysis using the instructions and referencing the example provided on the following pages. **Note** - Regulatory reviews must be submitted with sufficient detail so that DEQ can verify applicability and document in legal terms why the regulation applies. Regulatory reviews that are submitted with insufficient detail will be determined incomplete.	☐ A detailed regulatory review is provided (Follow instructions and example). ☐ DEQ has already been provided a detailed regulatory review. Give a reference to the document including the date.

IF YOU ARE UNSURE HOW TO ANSWER ANY OF THESE QUESTIONS, CALL THE AIR PERMIT HOTLINE AT 1-877-5PERMIT

It is emphasized that it is the applicant's responsibility to satisfy all technical and regulatory requirements, and that DEQ will help the applicant understand what those requirements are prior to the application being submitted but that DEQ will not perform the required technical or regulatory analysis on the applicant's behalf.

RICE NESHAP Summary of Requirements

1

For Emergency Compression Ignition Engines

Existing Stationary Engine ≤500 HP Located at Area Sources of HAP constructed before 6/12/2006

NOTE: Only the tables relevant to this source category are linked.

Your compliance date is May 3, 2013.

Emission Limitations: 63.6603, Table 2d

63.6603: Compliance with the numerical emission limitations established in this subpart is based on the results of testing the average of three 1-hour runs using the testing requirements, and procedures in §63.6620 (see Performance Tests below) and Table 4 to this subpart.

(a) If you own or operate an existing stationary RICE located at an area source of HAP emissions, you must comply with the requirements in Table 2d to this subpart and the operating limitations in Table 2b to this subpart which apply to you.

Operating Limitations: No Requirements

Fuel Requirements: No Requirements

Performance Tests: No Requirements

Monitoring, Installation, Collection, Operation and Maintenance Requirements:

63.6625(e), (f), (h), (i)

(e) If you own or operate any of the following stationary RICE, you must operate and maintain the stationary RICE and after-treatment control device (if any) according to the manufacturer's emission-related written instructions or develop your own maintenance plan which must provide to the extent practicable for the maintenance and operation of the engine in a manner consistent with good air pollution control practice for minimizing emissions:

(3) An existing emergency or black start stationary RICE located at an area source of HAP emissions;

(f) If you own or operate an existing emergency stationary RICE with a site rating of less than or equal to 500 brake HP located at a major source of HAP emissions or an existing emergency

1

Disclaimer: The content provided in this software tool is intended solely as assistance for potential reporters to aid in assessing requirements for compliance under the reciprocating internal combustion engines (RICE) National Emissions Standards for Hazardous Air Pollutants, 40 CFR Part 63 Subpart ZZZZ. Any variation between the rule and the information provided in this tool is unintentional, and, in the case of such variations, the requirements of the rule govern. Use of this tool does not constitute an assessment by EPA of the applicability of the rule to any particular facility. In any particular case, EPA will make its assessment by applying the law and regulations to the specific facts of the case.

1stationary RICE located at an area source of HAP emissions, you must install a non-resettable hour meter if one is not already installed.

(h) If you operate a new, reconstructed, or existing stationary engine, you must minimize the engine's time spent at idle during startup and minimize the engine's startup time to a period needed for appropriate and safe loading of the engine, not to exceed 30 minutes, after which time the emission standards applicable to all times other than startup in Tables 1a, 2a, 2c, and 2d to this subpart apply.

(i) If you own or operate a stationary CI engine that is subject to the work, operation or management practices in items 1 or 2 of Table 2c to this subpart or in items 1 or 4 of Table 2d to this subpart, you have the option of utilizing an oil analysis program in order to extend the specified oil change requirement in Tables 2c and 2d to this subpart. The oil analysis must be performed at the same frequency specified for changing the oil in Table 2c or 2d to this subpart. The analysis program must at a minimum analyze the following three parameters: Total Base Number, viscosity, and percent water content. The condemning limits for these parameters are as follows: Total Base Number is less than 30 percent of the Total Base Number of the oil when new; viscosity of the oil has changed by more than 20 percent from the viscosity of the oil when new; or percent water content (by volume) is greater than 0.5. If all of these condemning limits are not exceeded, the engine owner or operator is not required to change the oil. If any of the limits are exceeded, the engine owner or operator must change the oil within 2 days of receiving the results of the analysis; if the engine is not in operation when the results of the analysis are received, the engine owner or operator must change the oil within 2 days or before commencing operation, whichever is later. The owner or operator must keep records of the parameters that are

analyzed as part of the program, the results of the analysis, and the oil changes for the engine. The analysis program must be part of the maintenance plan for the engine.

Initial Compliance: No Requirements

Continuous Compliance: 63.6605, 63.6640

§ 63.6605 (a) You must be in compliance with the emission limitations and operating limitations in this subpart that apply to you at all times.

(b) At all times you must operate and maintain any affected source, including associated air pollution control equipment and monitoring equipment, in a manner consistent with safety and good air pollution control practices for minimizing emissions. The general duty to minimize emissions does not require you to make any further efforts to reduce emissions if levels required by this standard have been achieved. Determination of whether such operation and maintenance procedures are being used will be based on information available to the Administrator which may include, but is not limited to, monitoring results, review of operation and maintenance procedures, review of operation and maintenance records, and inspection of the source.

§ 63.6640 (a) You must demonstrate continuous compliance with each emission limitation and operating limitation in Tables 1a and 1b, Tables 2a and 2b, Table 2c, and Table 2d to this subpart that apply to you according to methods specified in Table 6 to this subpart.

2(b) You must report each instance in which you did not meet each emission limitation or operating limitation in Tables 1a and 1b, Tables 2a and 2b, Table 2c, and Table 2d to this subpart that apply to you. These instances are deviations from the emission and operating limitations in this subpart. These deviations must be reported according to the requirements in §63.6650. If you change your catalyst, you must reestablish the values of the operating parameters measured during the initial performance test. When you reestablish the values of your operating parameters, you must also conduct a performance test to demonstrate that you are meeting the required emission limitation applicable to your stationary RICE.

(c) [Reserved]

(d) For new, reconstructed, and rebuilt stationary RICE, deviations from the emission or operating limitations that occur during the first 200 hours of operation from engine startup (engine burn-in period) are not violations. Rebuilt stationary RICE means a stationary RICE that has been rebuilt as that term is defined in 40 CFR 94.11(a).

(e) You must also report each instance in which you did not meet the requirements in Table 8 to this subpart that apply to you. If you own or operate a new or reconstructed stationary RICE with a site rating of less than or equal to 500 brake HP located at a major source of HAP emissions (except new or reconstructed 4SLB engines greater than or equal to 250 and less than or equal to 500 brake HP), a new or reconstructed stationary RICE located at an area source of HAP emissions, or any of the following RICE with a site rating of more than 500 brake HP located at a major source of HAP emissions, you do not need to comply with the requirements in Table 8 to this subpart: An existing 2SLB stationary RICE, an existing 4SLB stationary RICE, an existing emergency stationary RICE, an existing limited use stationary RICE, or an existing stationary RICE which fires landfill gas or digester gas equivalent to 10 percent or more of the gross heat input on an annual basis. If you own or operate any of the following RICE with a site rating of more than 500 brake HP located at a major source of HAP emissions, you do not need to comply with the requirements in Table 8 to this subpart, except for the initial notification requirements: a new or reconstructed stationary RICE that combusts landfill gas or digester gas equivalent to 10 percent or more of the gross heat input on an annual basis, a new or reconstructed emergency stationary RICE, or a new or reconstructed limited use stationary RICE.

(f) Requirements for emergency stationary RICE. (1) If you own or operate an existing emergency stationary RICE with a site rating of less than or equal to 500 brake HP located at a major source of HAP emissions, a new or reconstructed emergency stationary RICE with a site rating of more than 500 brake HP located at a major source of HAP emissions that was installed on or after June 12, 2006, or an existing emergency stationary RICE located at an area source of HAP emissions, you must operate the emergency stationary RICE according to the requirements in paragraphs (f)(1)(i) through (iii) of this section. Any operation other than emergency operation, maintenance and testing, and operation in non-emergency situations for 50 hours per year, as described in paragraphs (f)(1)(i) through (iii) of this section, is prohibited. If you do not operate the engine according to the requirements in paragraphs (f)(1)(i) through (iii) of this section, the engine will not be considered an emergency engine under this subpart and will need to meet all requirements for non-emergency engines.

3(i) There is no time limit on the use of emergency stationary RICE in emergency situations.

(ii) You may operate your emergency stationary RICE for the purpose of maintenance checks

and readiness testing, provided that the tests are recommended by Federal, State or local government, the manufacturer, the vendor, or the insurance company associated with the engine. Maintenance checks and readiness testing of such units is limited to 100 hours per year. The owner or operator may petition the Administrator for approval of additional hours to be used for maintenance checks and readiness testing, but a petition is not required if the owner or operator maintains records indicating that Federal, State, or local standards require maintenance and testing of emergency RICE beyond 100 hours per year.

(iii) You may operate your emergency stationary RICE up to 50 hours per year in nonemergency situations, but those 50 hours are counted towards the 100 hours per year provided

for maintenance and testing. The 50 hours per year for non-emergency situations cannot be used for peak shaving or to generate income for a facility to supply power to an electric grid or otherwise supply power as part of a financial arrangement with another entity; except that owners and operators may operate the emergency engine for a maximum of 15 hours per year as part of a demand response program if the regional transmission organization or equivalent balancing authority and transmission operator has determined there are emergency conditions that could lead to a potential electrical blackout, such as unusually low frequency, equipment overload, capacity or energy deficiency, or unacceptable voltage level. The engine may not be operated for more than 30 minutes prior to the time when the emergency condition is expected to occur, and the engine operation must be terminated immediately after the facility is notified that the emergency condition is no longer imminent. The 15 hours per year of demand response operation are counted as part of the 50 hours of operation per year provided for non-emergency situations. The supply of emergency power to another entity or entities pursuant to financial arrangement is not limited by this paragraph (f)(1)(iii), as long as the power provided by the financial arrangement is limited to emergency power.

(2) If you own or operate an emergency stationary RICE with a site rating of more than 500 brake HP located at a major source of HAP emissions that was installed prior to June 12, 2006, you must operate the engine according to the conditions described in paragraphs (f)(2)(i) through (iii) of this section. If you do not operate the engine according to the requirements in paragraphs (f)(2)(i) through (iii) of this section, the engine will not be considered an emergency engine under this subpart and will need to meet all requirements for non-emergency engines.

(i) There is no time limit on the use of emergency stationary RICE in emergency situations.

(ii) You may operate your emergency stationary RICE for the purpose of maintenance checks and readiness testing, provided that the tests are recommended by the manufacturer, the vendor, or the insurance company associated with the engine. Required testing of such units should be minimized, but there is no time limit on the use of emergency stationary RICE in emergency situations and for routine testing and maintenance.

(iii) You may operate your emergency stationary RICE for an additional 50 hours per year in non-emergency situations. The 50 hours per year for non-emergency situations cannot be used 4for peak shaving or to generate income for a facility to supply power to an electric grid or otherwise supply power as part of a financial arrangement with another entity.

Notification Requirements: No Requirements

Recordkeeping Requirements: 63.6655, except 63.6655 (c)

§ 63.6655 (a) If you must comply with the emission and operating limitations, you must keep the records described in paragraphs (a)(1) through (a)(5), (b)(1) through (b)(3) and (c) of this section.

(1) A copy of each notification and report that you submitted to comply with this subpart, including all documentation supporting any Initial Notification or Notification of Compliance Status that you submitted, according to the requirement in §63.10(b)(2)(xiv).

(2) Records of the occurrence and duration of each malfunction of operation (i.e., process equipment) or the air pollution control and monitoring equipment.

(3) Records of performance tests and performance evaluations as required in §63.10(b)(2)(viii).

(4) Records of all required maintenance performed on the air pollution control and monitoring equipment.

(5) Records of actions taken during periods of malfunction to minimize emissions in accordance with §63.6605(b), including corrective actions to restore malfunctioning process and air pollution control and monitoring equipment to its normal or usual manner of operation.

(b) For each CEMS or CPMS, you must keep the records listed in paragraphs (b)(1) through (3) of this section.

(1) Records described in §63.10(b)(2)(vi) through (xi).

(2) Previous (i.e., superseded) versions of the performance evaluation plan as required in §63.8(d)(3).

(3) Requests for alternatives to the relative accuracy test for CEMS or CPMS as required in §63.8(f)(6)(i), if applicable.

(d) You must keep the records required in Table 6 of this subpart to show continuous compliance with each emission or operating limitation that applies to you.

(e) You must keep records of the maintenance conducted on the stationary RICE in order to demonstrate that you operated and maintained the stationary RICE and after-treatment control device (if any) according to your own maintenance plan if you own or operate any of the following stationary RICE;

(2) An existing stationary emergency RICE.

56

(3) An existing stationary RICE located at an area source of HAP emissions subject to management practices as shown in Table 2d to this subpart.

(f) If you own or operate any of the stationary RICE in paragraphs (f)(1) or (2) of this section, you must keep records of the hours of operation of the engine that is recorded through the nonresettable hour meter. The owner or operator must document how many hours are spent for emergency operation, including what classified the operation as emergency and how many hours are spent for non-emergency operation. If the engines are used for demand response operation, the owner or operator must keep records of the notification of the emergency situation, and the time the engine was operated as part of demand response.

(1) An existing emergency stationary RICE with a site rating of less than or equal to 500 brake HP located at a major source of HAP emissions that does not meet the standards applicable to non-emergency engines.

(2) An existing emergency stationary RICE located at an area source of HAP emissions that does not meet the standards applicable to non-emergency engines.

Reporting Requirements: Footnote 2 of Table 2d

2

If an emergency engine is operating during an emergency and it is not possible to shut down the engine in order to perform the management practice requirements on the schedule required in Table 2d of this subpart, or if performing the management practice on the required schedule would otherwise pose an unacceptable risk under Federal, State, or local law, the management

practice can be delayed until the emergency is over or the unacceptable risk under Federal, State, or local law has abated. The management practice should be performed as soon as practicable after the emergency has ended or the unacceptable risk under Federal, State, or local law has abated. Sources must report any failure to perform the management practice on the schedule required and the Federal, State or local law under which the risk was deemed unacceptable.

General Provisions (40 CFR part 63)- Table 8: Yes, except per 63.6645(a)(5), the following do not apply: 63.7(b) and (c), 63.8(e), (f)(4) and (f)(6), and 63.9(b)-(e)

Instructions for Form FRA

Item 4 & 5. It is important that facilities review the most recent federal regulations when submitting their permit application to DEQ. Current federal regulations can be found at the following Web site: http://ecfr.gpoaccess.gov/cgi/t/text/text-idx?&c=ecfr&tpl=/ecfrbrowse/Title40/40tab_02.tpl.

Item 6. For each applicable subpart identified under items 4-5 conduct a complete regulatory analysis. The facility must follow the procedure given below or obtain permission from DEQ to provide the necessary information using an alternative procedure:

1. Retrieve a TEXT or PDF copy of the applicable federal regulation subpart(s) online at http://www.gpoaccess.gov/cfr/retrieve.html
2. Copy and paste the regulation(s) into your DEQ air permit application.
3. Highlight or underline sections in the regulation(s) that are applicable to the source(s).
4. Under each section of the subpart, explain why the source is subject to the section, or why the source is not subject to the section. When providing the explanation use a different font than the regulation (i.e. ***bold, italic***) so that it is easy for the reader to determine the text that the applicant has provided. An example NSPS regulatory analysis is attached. The applicant must provide all necessary information needed to determine applicability. If information is lacking or the analysis is incomplete the application will be determined incomplete.

   EPA provides a web site dedicated to NSPS/NESHAP applicability determinations that may be useful to applicants. Follow this link to the applicability determination index Clean Air Act Applicability Determination Index - Compliance Monitoring - EPA. Another useful source of information is the preamble to the regulation which is published in the Federal Register on the date the regulation was promulgated. Federal Registers may be found online at Federal Register: Main Page. The date the regulation was published in the Federal Register is included in the footnotes of the regulation.
5. DEQ will assist in identifying the applicable requirements that the applicant must include in the application but will not perform the required technical or regulatory analysis on the applicant's behalf. Applicants should contact the Air Quality Permit Hotline (1-877-573-7648) to discuss NSPS/NESHAP regulatory analysis requirements or to schedule a meeting.
6. It also benefits facilities to document a non-applicability determination on federal air regulations which appear to apply to the facility but actually do not. A non-applicability determination will avoid future confusion and expedite the air permit application review. If you conduct an applicability determination and find that your activity is not NSPS or NESHAP affected facility an analysis should be submitted using the methods described above.
7. **It is not sufficient to simply provide a copy of the NSPS or NESHAP. The applicant must address each section of the regulation as described above and as shown in the example that is provided.**

EXAMPLE OF A NSPS REGULATORY ANALYSIS

[Title 40, Volume 6]
[Revised as of July 1, 2008]
From the U.S. Government Printing Office via GPO Access
[CITE: 40CFR60]

TITLE 40--PROTECTION OF ENVIRONMENT

CHAPTER I--ENVIRONMENTAL PROTECTION AGENCY (CONTINUED)

PART 60_STANDARDS OF PERFORMANCE FOR NEW STATIONARY SOURCES--
Table of Contents

Subpart H_Standards of Performance for Sulfuric Acid Plants

Sec.60.80 Applicability and designation of affected facility.

(a) The provisions of this subpart are applicable to each sulfuric acid production unit, which is the affected facility.
(b) Any facility under paragraph (a) of this section that commences construction or modification after August 17, 1971, is subject to the requirements of this subpart.

ACME Chemicals, Inc. is proposing to construct after August 17, 1971 a sulfuric acid plant which burns elemental sulfur as defined by 40 CFR 60.81(a). ACME is therefore affected by this subpart.

(Be sure to use the terms of the regulation to describe applicability; usually applicability is determined based on a specific date, definition of an affected facility, and rated input capacity. All of the applicability criteria must be addressed by the applicant.)

Note - if a determination of non-applicability is being submitted it is not necessary to address the remaining non-applicable regulatory sections. Be sure to provide the applicability determination in terms of the regulation (i.e. construction/modification date, rated input capacity, definition of affected facility).

Sec.60.81 Definitions.

As used in this subpart, all terms not defined herein shall have the meaning given them in the Act and in subpart A of this part.
(a) Sulfuric acid production unit means any facility producing sulfuric acid by the contact process by burning elemental sulfur, alkylation acid, hydrogen sulfide, organic sulfides and mercaptans, or acid sludge, but does not include facilities where conversion to sulfuric acid is utilized primarily as a means of preventing emissions to the atmosphere of sulfur dioxide or other sulfur compounds.
(b) Acid mist means sulfuric acid mist, as measured by Method 8 of appendix A to this part or an equivalent or alternative method.

ACME Chemicals, Inc. has read and understands these definitions and used them in providing this regulatory analysis.

Sec.60.82 Standard for sulfur dioxide.

(a) On and after the date on which the performance test required to be conducted by Sec.60.8 is completed, no owner or operator subject to the provisions of this subpart shall cause to be discharged into the atmosphere from any affected facility any gases which contain sulfur dioxide in excess of 2 kg per metric ton of acid produced (4 lb per ton), the production being expressed as 100 percent H2/SO4/.

ACME Chemicals, Inc. is subject to this standard and has provided a documented emission inventory (or manufacturer guarantee) which shows compliance.

Sec.60.83 Standard for acid mist.

(a) On and after the date on which the performance test required to be conducted by Sec.60.8 is completed, no owner or operator subject to the provisions of this subpart shall cause to be discharged into the atmosphere from any affected facility any gases which:

(1) Contain acid mist, expressed as H2/SO4/, in excess of 0.075 kg per metric ton of acid produced (0.15 lb per ton), the production being expressed as 100 percent H2/SO4/.

ACME Chemicals, Inc. is subject to this standard and has provided a documented emission inventory (or manufacturer guarantee) which shows compliance.

(2) Exhibit 10 percent opacity, or greater.

ACME Chemicals, Inc. understands that this will become a permit condition and has supplied a manufacturer guarantee that the sulfuric acid plant will comply with this standard.

Sec.60.84 Emission monitoring.

(a) A continuous monitoring system for the measurement of sulfur dioxide shall be installed, calibrated, maintained, and operated by the owner or operator. The pollutant gas used to prepare calibration gas mixtures under Performance Specification 2 and for calibration checks under Sec.60.13(d), shall be sulfur dioxide (SO2/). Method 8 shall be used for conducting monitoring system performance evaluations under Sec.60.13(c) except that only the sulfur dioxide portion of the Method 8 results shall be used. The span value shall be set at 1000 ppm of sulfur dioxide.

(b) The owner or operator shall establish a conversion factor for the purpose of converting monitoring data into units of the applicable standard (kg/metric ton, lb/ton). The conversion factor shall be determined, as a minimum, three times daily by measuring the concentration of sulfur dioxide entering the converter using suitable methods (e.g., the Reich test, National Air Pollution Control Administration Publication No. 999-AP-13) and calculating the appropriate conversion factor for each eight-hour period as follows:

CF=k[(1.000-0.015r)/(r-s)]

where:

CF=conversion factor (kg/metric ton per ppm, lb/ton per ppm).
k=constant derived from material balance. For determining CF in metric units, k=0.0653. For determining CF in English units, k=0.1306.
r=percentage of sulfur dioxide by volume entering the gas converter. Appropriate corrections must be made for air injection plants subject to the Administrator's approval.
s=percentage of sulfur dioxide by volume in the emissions to the atmosphere determined by the continuous monitoring system required under paragraph (a) of this section.

(c) The owner or operator shall record all conversion factors and values under paragraph (b) of this section from which they were computed (i.e., CF, r, and s).

ACME Chemicals, Inc. is not proposing to utilize Sections 60.84(a)-(c)listed above to monitor emissions. Instead ACME Chemicals is utilizing 40 CFR 60.84(d) listed below to monitor emissions of sulfur dioxide.

(d) Alternatively, a source that processes elemental sulfur or an ore that contains elemental sulfur and uses air to supply oxygen may use the following continuous emission monitoring approach and calculation procedures in determining SO2/ emission rates in terms of the standard. This procedure is not required, but is an alternative that would alleviate problems encountered in the measurement of gas velocities or production rate. Continuous emission monitoring systems for measuring SO2/, O2/, and CO2/ (if required) shall be installed, calibrated, maintained, and operated by the owner or operator and subjected to the certification procedures in Performance Specifications 2 and 3. The calibration procedure and span value for the SO2/ monitor shall be as specified in paragraph (b) of this section. The span value for CO2/ (if required) shall be 10 percent and for O2/ shall be 20.9 percent (air). A conversion factor based on process rate data is not necessary. Calculate the SO2/ emission rate as follows:

Es/=(Cs/ S)/[0.265-(0.126 %O2/)-(A %CO2/)]

where:

Es/=emission rate of SO2/, kg/metric ton (lb/ton) of 100 percent of H2/SO4/ produced.
Cs/=concentration of SO2/, kg/dscm (lb/dscf).
S=acid production rate factor, 368 dscm/metric ton (11,800 dscf/ton) of 100 percent H2/SO4/ produced.
%O2/=oxygen concentration, percent dry basis.
A=auxiliary fuel factor,
=0.00 for no fuel.
=0.0226 for methane.
=0.0217 for natural gas.
=0.0196 for propane.
=0.0172 for No 2 oil.
=0.0161 for No 6 oil.
=0.0148 for coal.
=0.0126 for coke.
%CO2/= carbon dioxide concentration, percent dry basis.

Note: It is necessary in some cases to convert measured concentration units to other units for these calculations:

Use the following table for such conversions:

From--	To--	Multiply by--
g/scm.....	kg/scm.....	10-3
mg/scm.....	kg/scm.....	10-6
ppm (SO2).....	kg/scm.....	2.660x10-6
ppm (SO2).....	lb/scf.....	1.660x10-7

ACME Chemicals, Inc. has elected to use the monitoring requirements of the preceding section.

(e) For the purpose of reports under Sec.60.7(c), periods of excess emissions shall be all three-hour periods (or the arithmetic average of three consecutive one-hour periods) during which the integrated average sulfur dioxide emissions exceed the applicable standards under Sec.60.82.

ACME acknowledges that this section applies to the sulfuric acid plant.

Sec.60.85 Test methods and procedures.

(a) In conducting the performance tests required in Sec.60.8, the owner or operator shall use as reference methods and procedures the test methods in appendix A of this part or other methods and procedures as specified in this section, except as provided in Sec.60.8(b). Acceptable alternative methods and procedures are given in paragraph (c) of this section.

(b) The owner or operator shall determine compliance with the SO2/ acid mist, and visible emission standards in Sec. Sec. 60.82 and 60.83 as follows:

(1) The emission rate (E) of acid mist or SO2/ shall be computed for each run using the following equation:

E=(CQsd/)/(PK)

where:

E=emission rate of acid mist or SO2/ kg/metric ton (lb/ton) of 100 percent H2/SO4/ produced.
C=concentration of acid mist or SO2/, g/dscm (lb/dscf).
Qsd/=volumetric flow rate of the effluent gas, dscm/hr (dscf/hr).
P=production rate of 100 percent H2/SO4/, metric ton/hr (ton/hr).
K=conversion factor, 1000 g/kg (1.0 lb/lb).

(2) Method 8 shall be used to determine the acid mist and SO2/ concentrations (C's) and the volumetric flow rate (Qsd/) of the effluent gas. The moisture content may be considered to be zero. The sampling time and sample volume for each run shall be at least 60 minutes and 1.15 dscm (40.6 dscf).

(3) Suitable methods shall be used to determine the production rate (P) of 100 percent H2/SO4/ for each run. Material balance over the production system shall be used to confirm the production rate.

(4) Method 9 and the procedures in Sec.60.11 shall be used to determine opacity.

(c) The owner or operator may use the following as alternatives to

the reference methods and procedures specified in this section:

(1) If a source processes elemental sulfur or an ore that contains elemental sulfur and uses air to supply oxygen, the following procedure may be used instead of determining the volumetric flow rate and production rate:

(i) The integrated technique of Method 3 is used to determine the O2/ concentration and, if required, CO2/ concentration.

(ii) The SO2/ or acid mist emission rate is calculated as described in Sec.60.84(d), substituting the acid mist concentration for Cs/ as appropriate.

ACME Chemicals, Inc. acknowledges that performance tests shall be conducted as specified above.