RECEIVED
APR 25 2012
DEPARTMENT OF ENVIRONMENTAL QUALITY
STATE A Q PROGRAM

DYNAMIS
ENERGY™

Dynamis Energy, LLC
776 E. Riverside Drive, Suite 150
Eagle, ID 83616

RECEIVED
DEQ
APR 25 2012
4:20 pm
By R. Greenwood

April 25, 2012

Mr. Bill Rogers
Department of Environmental Quality
Air Quality Division
Stationary Source Program
1410 North Hilton
Boise, Idaho 83706-1255

Re: Request for Pre-Permit Construction Approval Application
Dynamis Energy, LLC

Dear Mr. Rogers:

Enclosed is a pre-permit construction approval application addressing Dynamis Energy, LLC's (Dynamis) proposal to construct a new waste-to-energy (WTE) facility at the Hidden Hollow Landfill in Ada County, ID. Dynamis is requesting DEQ to process this application in accordance with the 15-day pre-permit construction approval process contained in IDAPA 58.01.01.213. As required in IDAPA 58.01.01.213.01a., the permit to construct application is being submitted concurrently with this pre-permit construction request.

The enclosed pre-permit construction approval application has been prepared in accordance with DEQ's March 2009 guidance document "Pre-permit Construction Approval Guidance Document." On February 9, 2012 Dynamis and JBR Environmental Consultants, Inc. held a meeting with DEQ to discuss that a request for pre-permit construction approval would be forthcoming. Also, in accordance with the requirements for a 15-day pre-permit construction approval, Dynamis has advertised in the Idaho Statesman on April 20, 2012 an invitation to attend a public information meeting to be held at the Oxford Suites Hotel in Boise, Idaho on May 1, 2012 at 1:30pm.

This project meets the eligibility requirements for pre-permit construction approval because the proposed facility is a minor source and does not plan to utilize emission offsets or netting, and the emissions from the facility are unlikely to impact Class I air quality related values. This satisfies the requirement that a certified proof of pre-permit construction eligibility must be submitted with the pre-permit construction approval application in accordance with IDAPA 58.01.01.213.01.

This submittal includes the PTC application, a modeling section that demonstrates compliance with all applicable air quality rules, detailed emission calculations, and a copy of the newspaper announcement for the public information meeting. Additionally, this submittal contains an electronic copy of the modeling files that support this application and the $1,000 PTC application fee.

In accordance with IDAPA 58.01.01.213.01.d, I hereby certify that Dynamis will comply with any restrictions it has imposed on potential to emit such that emissions will be below major source levels, including emission limitations, operating limitations, and monitoring and reporting requirements.

Pursuant to IDAPA 58.01.01.123, I hereby certify that, based on information and belief formed after reasonable inquiry, the statements and information in this application are true, accurate, and complete.

Please feel free to contact me at 208.938.2680 or Shannon Manoulian of JBR Environmental Consultants at 208.853.0883 if you have any questions or need additional information.

Sincerely,

C. Lloyd Mahaffey
Chairman & CEO, Dynamis Energy, LLC

Enclosures

Cc: JBR Environmental Consultants, Inc.

Dynamis Energy, LLC
776 E Riverside Dr. Ste 150
Eagle, Idaho 83616
208-938-2680 (p)

RECEIVED
APR 25 2012
DEPARTMENT OF ENVIRONMENTAL QUALITY
STATE AIR PROGRAM

Dynamis Energy, LLC

15-Day Pre-Permit Construction Approval and Permit- to-Construct Application Hidden Hollow Landfill WTE Facility

Prepared for:
Dynamis Energy, LLC
Eagle, ID
Contact: Doyle Pergande
208.938.2680

Prepared by:
JBR Environmental Consultants, Inc.
7669 W. Riverside Drive, Suite 101
Boise, ID 83714
Contact: Shannon Manoulian
208.853.0883

April 2012

JBR
creating solutions for today's environment
www.jbrenv.com

TABLE OF CONTENTS

1.0 INTRODUCTION 1

2.0 PROCESS DESCRIPTION 1
- 2.1 General Process Overview 1
- 2.2 Hidden Hollow WTE Facility 3
- 2.3 Emissions Sources 4

3.0 REGULATORY APPLICABILITY 6
- 3.1 State Regulatory Applicability 6
  - 3.1.1 Certification of Documents 7
  - 3.1.2 Excess Emissions 8
  - 3.1.3 Demonstration of Preconstruction Compliance with Toxic Standards 8
  - 3.1.4 Mercury Emission Standard for New or Modified Sources 8
  - 3.1.5 Toxic Air Pollutants 8
  - 3.1.6 New Source Performance Standards 9
  - 3.1.7 National Emission Standards for Hazardous Air Pollutants 10
  - 3.1.8 Open Burning 11
  - 3.1.9 Visible Emissions 12
  - 3.1.10 Rules for Control of Fugitive Dust 12
  - 3.1.11 Fuel Burning Equipment – Particulate Matter 12
  - 3.1.12 Particulate Matter – Process Weight Limitations 12
  - 3.1.13 Odors 13
- 3.2 Federal Regulatory Applicability 13
  - 3.2.1 National Ambient Air Quality Standards (NAAQS) 14
  - 3.2.2 Title V (Part 70) Operating Permit 15
  - 3.2.3 National Emission Standards for Hazardous Air Pollutants (NESHAPs) 15
  - 3.2.4 New Source Review (NSR) Requirements 15
  - 3.2.5 New Source Performance Standards (NSPS) 16
  - 3.2.6 Acid Rain Requirements 16
  - 3.2.7 Risk Management Programs for Chemical Accidental Release Prevention 16
  - 3.2.8 Mandatory Greenhouse Gas Reporting 16

4.0 EMISSIONS SUMMARY 17
- 4.1 Criteria Pollutants 18
- 4.2 Toxic Air Pollutants 20

5.0 LIMITATIONS ON POTENTIAL TO EMIT 22
- 5.1 Operating Hours 22
- 5.2 Fuel and Material Throughput 22
- 5.3 Control Equipment 22

5.4 Stack Parameters 22

LIST OF TABLES

Table 3-1 State Regulatory Applicability Summary 7
Table 3-2 Process Weight Calculations 13
Table 3-3 Federal Regulatory Applicability Summary 14
Table 4-1 Facility Criteria Pollutant PTE 19
Table 4-2 Facility TAPs PTE 21

LIST OF APPENDICES

APPENDIX A Site Location Map and Plot Plan
APPENDIX B Public Notice of the 15-Day Pre-Permit Informational Meeting
APPENDIX C DEQ PTC Forms and Checklists, Subpart Eb Applicability, and Materials Separation Plan PTC Requirements
APPENDIX D Process Flow Diagram
APPENDIX E Manufacturer Information
APPENDIX F Emissions Inventory (including electronic copy on CD)
APPENDIX G Ambient Impact Assessment

1.0 INTRODUCTION

Dynamis Energy, LLC (Dynamis) is proposing to construct and operate a Waste-to-Energy (WTE) facility at the Hidden Hollow Landfill in Ada County, ID. A site location map and plot plan are included in Appendix A. The purpose of this document is to present all necessary and applicable information regarding the facility in support of a 15-Day Pre-Permit Construction Approval Application and Permit to Construct (PTC) Application for the facility. The Dynamis WTE facility will be a minor source for all pollutants.

Appendix B contains a copy of the public notice of the informational meeting to be held in accordance with IDAPA 58.01.01.213.02. All applicable required DEQ PTC forms and checklists are included in Appendix C.

2.0 PROCESS DESCRIPTION

The Dynamis WTE facility uses a proprietary thermal conversion technology process to convert municipal solid waste (MSW), including automobile tires, to energy. Dynamis' technology utilizes a controlled (starved) air gasification process which thermally converts waste products to combustible gas. The two-stage process provides complete conversion of carbon to an inert ash and a controlled heat output for efficient energy recovery.

2.1 General Process Overview

The two-stage waste to energy process uses batch waste gasification and thermal combustion/oxidation. MSW is initially loaded into a primary chamber where it is thermally reacted under air controlled (starved) conditions and transformed into burnable gases and ash. Unlike typical thermal treatment methods, the gasification reactions occur at relatively low temperatures under controlled conditions. This minimizes the production of airborne 'fly ash' particulates, carryover of toxic metals, and NO_x. The gasification process ensures nearly 100% destruction (burn-out) of the combustible waste and the by-product of ash is sterile with minimal residual carbon. Metals and glass in the waste stay with the ash in inert forms and can be recovered by conventional recycling methods. To complete the process, the gases from the primary gasification chamber enter the secondary combustion chamber where they are mixed with oxygen (taken from ambient air) and oxidized at high temperature to complete the process. The energy from the hot gas effluent can then be recaptured for local heat, power or other forms of energy recovery.

Tipping Floor/Conveyor to Primary

The process begins by loading MSW, directly from garbage trucks, onto the tipping floor. Next the MSW is moved by conveyer into the primary gasification chamber. Waste materials can be accepted loose, bagged, baled, or on pallets. The system can also accept a wide range of bulky items such as vehicle tires, mattresses, furniture, and construction debris.

The Primary Gasification Chamber (PGC)

The MSW is then bulk-loaded into the primary gasification chamber (PGC) through a hydraulically operated door at the top or front of the chamber and a carefully controlled flow of air is introduced. Only enough air is provided to allow sufficient burning for heating to occur, typically 70 to 80 percent of the stoichiometric air requirement is introduced into the PGC. Due to the air controlled (starved) environment, the MSW gasifies and is converted to a super rich gas. Gasification occurs in the PGC at relatively low temperatures of 450-550°C (800-1000°F), converting the waste into gas and ash. The hot gases are then passed to the secondary combustion system.

The Secondary Combustion System (SCS)

Once the hot gas is passed into the secondary combustion system (SCS) they are actively mixed with oxygen (taken from the ambient air). This process is achieved by the use of a turbulent air ring which flashes (combusts) the mixture at temperatures of 1,800-2,000°F. The turbulent air ring and temperature assure that a rapid and thorough mixture of the super rich gas and oxygen is achieved. Combustion gases are maintained at temperatures of 1,800-2,000°F for an extended retention time prior to entering a heat recovery steam generator. This insures all combustible gases are consumed.

Boiler/Steam Production

The flame created by the super rich gas/oxygen combustion is directed through a high temperature power boiler where water is converted into high pressure steam. The boiler has an extended retention time design that provides maximum furnace volume without excessive refractory, plus increased radiant surface for maximum heat absorption.

Energy Production

This high pressure steam generated from the boiler is directed through a power generation turbine creating electrical power that can be routed to the local electrical grid.

Process Logic Control System

All aspects of combustion and fuel feed are monitored and controlled by state-of-the-art logic, three times per second. This is especially important with the ever-changing combustion

conditions of biomass and waste fuels. The microprocessor analyzes data from various inputs such as switches, thermocouples, RTDs and an oxygen sensor to continually monitor exhaust and optimize air-to-fuel mixture, and signal when anything needs attention.

Ash Handling

Recyclables and ash from the process are collected for reclamation. After each gasification cycle in the PGC, the remaining material (approximately 10% of the original volume) will be moved by conveyor belt to the ash handling system, where all recyclables are sorted and retained automatically. The end by-product of the gasification process is inert ash, which will be collected and possibly sold as an important additive in concrete and cement based building materials.

2.2 Hidden Hollow WTE Facility

The Dynamis WTE facility at the Hidden Hollow Landfill will consist of one thermal conversion units, capable of processing up to 408 tons per day (tpd) of MSW, including automobile tires. The MSW will be delivered to the facility and dumped on to the tipping floor inside the facility building. The waste is then conveyed to one of twelve primary gasification chambers on the thermal conversion unit. The system will operate as a batch process with each primary gasification chamber being loaded in succession. The super rich gas created in each of the primary gasification chambers is passed into the secondary combustion chamber where it is mixed with oxygen creating a flame. The flame is directed through a high temperature power boiler where water is converted into high pressure steam. The high pressure steam generated from the boiler is directed through a power generation turbine creating electrical power.

Ash produced in the primary gasification chamber is collected in bins beneath the chambers. The ash is moved by conveyor belt to the ash handling system, where the material is conveyed through a roller drum magnet to separate ferrous metals from the ash. Ferrous metals collected in the roller drum magnet are collected in the ferrous metals storage bin. The remaining ash material then passes through an eddy current pulse separator, which removes any aluminum from the ash. Aluminum material then travels via conveyor to the aluminum storage bin; clean ash material is transferred via conveyor to the clean ash storage bin. The ash handling system is completely enclosed. In addition, a baghouse is used to control particulate emissions during material separation and handling in the ash handling room.

A process flow diagram is contained in Appendix D.

2.3 Emissions Sources

Emissions sources at the facility will include the following:

Thermal Conversion Units

Dynamis will operate one 408 tpd thermal conversion unit at the facility. The unit consists of the primary gasification chamber, secondary combustion chamber, and boiler. Steam generated in the boiler is used to power a power generation turbine. Emissions from the primary gasification chambers and secondary combustion chambers are exhausted through the boiler stack. The boilers will be custom made for the facility by Victory Energy. The majority of MSW, 380 tpd, will be processed between the hours of 7am and 11pm (16 hours). The remaining MSW, 28 tpd, will be processed between 11pm and 7am. The facility will process 408 total tons of MSW per day. The MSW is expected to contain moisture as well as un-combustible materials such as glass and metal. It is conservatively assumed that 90% of the MSW received will be combustible materials; therefore, emissions estimates are based on 367 tpd of combustible material (342 tpd peak, 25 tpd off-peak).

The thermal conversion unit is a source of PM_{10}, $PM_{2.5,}$ NO_x, SO_2, CO, Lead, and Idaho Toxic Air Pollutants (TAPs). Emission factors for the thermal conversion unit were developed using source test data from similar units installed at other facilities in the United States. Emissions from the thermal unit (including primary chamber ignition system natural gas combustion) will be controlled by a scrubber located between the boiler and exhaust stack. The scrubber has a manufacturer guaranteed emission rate 0.595 lb/hr HCl, 71.25% control of SO2, 99% control of PM_{10}, and 90% control of particulate sized 1.5 to 2.5 micron (this equates to approximately 41% control of $PM_{2.5}$; it is estimated that particulates sized 1.5 to 2.5 micron comprise approximately 46% of $PM_{2.5}$ from gasification). Scrubber specifications and manufacturer guarantee are included in Appendix E.

Primary Gasification Chamber Ignition System

Each time waste is loaded into the primary gasification chamber and the chamber is lit, a small amount of fuel is required to ignite the chamber burner. The ignition system will be fueled by natural gas. A total of 112,000 scf/day of natural gas will be used for all ignition systems. The primary gasification chamber ignition system will exhaust through the primary and secondary chambers and out of the boiler exhaust stack (and will be controlled by the scrubber). The ignition system is a source of PM_{10}, $PM_{2.5,}$ NOx, SO_2, CO, VOCs, and TAPs. Emission factors from AP-42, Section 1.4 were used to calculate natural gas combustion emissions.

Cooling Towers

Steam exiting the turbine will be exhausted through a condenser that is cooled with water from two cooling towers. Water used in the cooling towers will be supplied by United Water. The cooling towers are a source of PM_{10} and $PM_{2.5}$. Emissions factors from AP-42 Section 13.4 and input water analysis TDS content were used to calculate cooling tower particulate emissions.

Ash Handling System

As discussed above, the ash collection system consists of various conveyors, ferrous and aluminum material separators and collection bins. A total of five dust collection units will control PM_{10}/$PM_{2.5}$ emissions from the ash handling system. The dust collectors are centrally located in the ash handling room above the roller drum magnet and eddy current pulse separator to collect any dust generated during ash material separation and above the ferrous material, aluminum material and clean ash bins. The dust collectors will discharge to the ash system baghouse, which has a manufacturer guaranteed emission rate of 0.005 grains/dscf for particles size 10 micron and smaller. The baghouse will exhaust through a stack outside of the ash handling room, and will exhaust for approximately 45 minutes every hour. The ash handling system is a source of PM_{10}, $PM_{2.5}$ and TAPs. Ash testing data (TCLP mg/L results) was converted to an approximate mg/kg concentration to develop emission factors for pollutant emissions from the ash system. Specifications on the baghouse are included in Appendix E.

Emergency Generator

The facility will be powered by electric line power. However, a 300 kW emergency diesel generator will be installed at the facility. The proposed generator will be an EPA Tier III certified Caterpillar C9 ACERT (or similar), and will run no more than 500 hours per year. The generator will be tested up to four times per quarter and testing will occur between 7 am and 7 pm. The emergency generator is a source of PM_{10}, $PM_{2.5}$, NO_x, SO_2 CO, VOCs, and TAPs. Manufacturer data and emission factors from AP-42 Section 3.3 were used to calculate generator emissions estimates. Manufacturer data is included in Appendix E.

Emissions factors for the thermal conversion unit and ash handling system used to develop the emissions inventory are based on multiple source tests of similar thermal conversion units installed at various facilities over the past 15 years. Copies of source tests were previously provided to DEQ but will be provided again upon request. Dynamis will ensure that operating parameters for the primary and secondary combustion chambers that will be consistent with those calculated from source test data. The primary chamber at the Dynamis facility will be operated between 450˚F and 850˚F. A total of 13 thermocouples will be installed on the primary chamber; one which will be the primary controller for the chamber, and 12 used as informational devices. The secondary chamber (after initial startup) will be kept between 2000 -2200˚F, with

one controlling thermocouple and 6 informational thermocouples. A modulating damper will be used to control gas flow from the primary chamber to the secondary chamber. The damper will be equipped with a sensor which monitors CO and O_2 levels in the chambers. The optimum operating parameters is a CO concentration of 20% and an oxygen concentration range of 0–2%. The thermocouples and modulating damper sensor will be linked to the Process Logic Control (PLC) and will be monitored 24 hours per day, 7 days per week by the system operator(s).

Cooling tower, emergency generator, and primary gasification ignition system fuel combustion emissions estimates were developed using manufacturer data and AP-42. A detailed emissions inventory for each emissions source is included in Appendix F.

Emissions estimates for the above listed sources are included in Section 4.0. Stack parameters for each piece of equipment are included in the Ambient Impact Assessment (Modeling Report) included as Appendix G.

3.0 REGULATORY APPLICABILITY

A review of applicable State and Federal Rules for each emissions unit is provided in Sections 3.1 and 3.2 below.

3.1 State Regulatory Applicability

A review of applicable requirements of the Rules for the Control of Air Pollution in Idaho is provided in Table 3-1. Each regulation is described in the sections following the table.

Table 3-1 State Regulatory Applicability Summary

Section	Description	Regulatory Citation	Applicable?
3.1.1	Certification of Documents	IDAPA 58.01.01.123	Yes
3.1.2	Excess Emissions	IDAPA 58.01.01.130-136	Yes
3.1.3	Demonstration of Preconstruction Compliance with Toxic Standards	IDAPA 58.01.01.210	Yes
3.1.4	Mercury Emission Standard for New or Modified Sources	IDAPA 58.01.01.215	No
3.1.5	Toxic Air Pollutants	IDAPA 58.01.01.585 and 586	Yes
3.1.6	New Source Performance Standards	IDAPA 58.01.01.590	Yes
3.1.7	National Emissions Standards for Hazardous Air Pollutants	IDAPA 58.01.01.591	No
3.1.8	Open Burning	IDAPA 58.01.01.600-616	Yes
3.1.9	Visible Emissions	IDAPA 58.01.01.625	Yes
3.1.10	Rules for Control of Fugitive Dust	IDAPA 58.01.01.650	Yes
3.1.11	Fuel Burning Equipment – Particulate Matter	IDAPA 58.01.01.675-681	Yes
3.1.12	Particulate Matter – Process Weight Limitations	IDAPA 58.01.01.701	Yes
3.1.13	Odors	IDAPA 58.01.01.775-776	Yes

3.1.1 Certification of Documents

IDAPA 58.01.01.123 requires all documents including application forms for permits to construct, records, and monitoring reports submitted to the Department shall contain a

certification by a responsible official. Dynamis will comply with this requirement and the appropriate certifications by a responsible official are being submitted with this application.

3.1.2 Excess Emissions

IDAPA 58.01.01.130-136 establishes procedures and requirements to be implemented in all excess emissions events. Dynamis will comply with the procedures and requirements outlined in Section 131-136 and submit the necessary information and reports to DEQ related to excess emissions due to startup, shutdown, scheduled maintenance, safety measures, upsets and breakdowns.

3.1.3 Demonstration of Preconstruction Compliance with Toxic Standards

IDAPA 58.01.01.210 establishes requirements for preconstruction compliance with toxic standards. Dynamis will comply with this rule by identifying and calculating the toxic pollutant emission rates from all applicable emissions units at the facility.

As described in Section 4.0 Emission Summary, Dynamis calculated the increase in Toxic Air Pollutant (TAP) emission rates from the thermal conversion units, primary chamber ignition systems, ash handling system and emergency generator and compared them to the screening levels. Dynamis then modeled the ambient concentrations for those toxics which exceeded their respective emission screening levels. A complete Modeling Report (Ambient Impact Assessment) is included in Appendix G which documents how Dynamis demonstrates preconstruction compliance with toxic air quality preconstruction standards.

3.1.4 Mercury Emission Standard for New or Modified Sources

IDAPA 58.01.01.215 requires an owner or operator of a stationary source or facility to include a mercury BACT (MBACT) analysis in the permit to construct application if a facility has annual potential emissions of mercury of 25 pounds or more. The estimated mercury emissions from the facility will be 19.4 pounds/year, therefore an MBACT analysis is not required with the permit application.

3.1.5 Toxic Air Pollutants

IDAPA 58.01.01.585 and 586 establishes requirements for compliance with toxic air pollutants. Dynamis demonstrates compliance with the standards in the modeling report included in Appendix G. The TAP Preconstruction Compliance Application Completeness Checklist is included in Appendix C and TAP emissions are shown in Section 4.0 below.

3.1.6 New Source Performance Standards

New Source Performance Standards (NSPS) in 40 CFR Part 60 are applicable to new, modified, or reconstructed stationary sources that meet or exceed specified applicability thresholds. Subpart Eb—Standards of Performance for Large Municipal Waste Combustors for Which Construction is Commenced After September 20, 1994 or for Which Modification or Reconstruction is Commenced After June 19, 1996, applies to large (>250 tpd) municipal waste combustion units. Subpart Eb defines municipal waste combustion units as:

> *Any setting or equipment that combusts solid, liquid, or gasified municipal solid waste including, but not limited to, field-erected incinerators (with or without heat recovery), modular incinerators (starved-air or excess-air), boilers (i.e., steam generating units), furnaces (whether suspension-fired, grate-fired, mass-fired, air curtain incinerators, or fluidized bed-fired), and pyrolysis/combustion units.*

Subpart Eb contains both pre-construction and post-construction requirements for municipal waste combustion units. Pre-construction requirements include preparation of a Materials Separation Plan (MSP) and Siting Analysis (SA) and associated public meetings. Dynamis has complied/will comply with the MSP and SA requirements as described below. A more detailed review of Subpart Eb, including applicability and compliance with requirements of each section is included in Appendix C.

Material Separation Plan

The Dynamis Preliminary Draft MSP was prepared and submitted to the Boise Public Library and Eagle Public Library on May 27, 2011. The notification of public meeting was published in the Idaho Statesman on May 27, 2011 and included the information required in Subpart Eb. The public meeting was held on June 27, 2011 in Ada County, Idaho. A document summarizing responses to public comments was prepared and made available to the public by placing the response document at the public libraries where the Preliminary Draft MSP was submitted. A copy of the notification of the public meeting, a transcript of the public meeting, the document summarizing responses to public comments, and copies of both the preliminary and final draft materials separation plans will be submitted to the Idaho Department of Environmental Quality as part of the Permit to Construct Application for the facility. A final draft MSP was prepared and submitted to the Boise Public Library and Eagle Public Library on March 6, 2012, along with the Draft Siting Analysis. As part of the public meeting for review of the Siting Analysis, Dynamis addressed any questions concerning the Final Draft MSP. Comments on the Final Draft Materials MSP received during the Draft Siting Analysis public meeting will be addressed in the combined Draft Siting Analysis and Final Draft MSP comment response document which

is required to be submitted with the Notice of Construction. A Final MSP will be prepared and submitted with the Notice of Construction.

Siting Analysis

The Dynamis Draft Siting Analysis was prepared and submitted to the Boise Public Library and Eagle Public Library on March 6, 2012, along with the Final Draft Materials Separation Plan. The notification of public meeting was published in the Idaho Statesman on March 6, 2012 and included the information specified in Subpart Eb. The public meeting was held on April 4, 2012 in Ada County, Idaho. A document summarizing responses to public comments was prepared and made available to the public by placing the response document at the public libraries where the Draft Siting Analysis was submitted. A copy of the notification of the Siting Analysis public meeting, a transcript of the Siting Analysis public meeting, the document summarizing responses to public comments, and the Siting Analysis will be submitted as part of the initial notification of construction.

A copy of the notification of the public meeting for the Preliminary Draft MSP, a transcript of the public meeting for the Preliminary Draft MSP, the document summarizing responses to public comments to the Preliminary Draft MSP, and copies of both the Preliminary and Final Draft MSPs are included in Appendix C.

3.1.7 National Emission Standards for Hazardous Air Pollutants

Two sets of National Emissions Standards for Hazardous Air Pollutants (NESHAPs) may potentially apply to the Dynamis facility. The first NESHAP regulations were developed under the auspices of the original Clean Air Act. These standards are codified in 40 CFR Part 61, and address a limited number of pollutants and industries. The Dynamis facility does not fall under any of the industries or have the potential to emit any of the pollutants listed in 40 CFR Part 61, and therefore, 40 CFR Part 61 regulations do not apply to this facility.

Newer regulations are codified in 40 CFR Part 63 under the authority of the 1990 Clean Air Act Amendments (CAAA). These standards regulate hazardous air pollutant (HAP) emissions from specific source categories and typically affect only major sources of HAPs. Part 63 regulations are frequently called Maximum Achievable Control Technology (MACT) standards. Major HAP sources have a potential to emit (PTE) of 10 tpy or more of any single HAP or 25 tpy or more of all combined HAP emissions. At the Dynamis facility, potential emissions of individual HAPs will be less than 10 tpy and combined HAP emissions will be less than 25 tpy.

EPA recently revised the “Boiler MACT” rules, Subpart JJJJJJ - National Emission Standards for Hazardous Air Pollutants for Industrial, Commercial, and Institutional Boilers Area Sources.

The thermal unit will gasify MSW. The boiler at the Dynamis facility will be fueled by syngas produced from the thermal conversion of MSW. Based on the following, the boiler at the Dynamis facility is not subject to Subpart JJJJJJ.

§ 63.11195 Are any boilers not subject to this subpart?
The types of boilers listed in paragraphs (a) through (g) of this section are not subject to this subpart and to any requirements in this subpart.

(a) Any boiler specifically listed as, or included in the definition of, an affected source in another standard(s) under this part.
(b) Any boiler specifically listed as an affected source in another standard(s) established under section 129 of the Clean Air Act.
(c) A boiler required to have a permit under section 3005 of the Solid Waste Disposal Act or covered by subpart EEE of this part (e.g., hazardous waste boilers).
(d) A boiler that is used specifically for research and development. This exemption does not include boilers that solely or primarily provide steam (or heat) to a process or for heating at a research and development facility. This exemption does not prohibit the use of the steam (or heat) generated from the boiler during research and development, however, the boiler must be concurrently and primarily engaged in research and development for the exemption to apply.
(e) A gas-fired boiler as defined in this subpart.
(f) A hot water heater as defined in this subpart.
(g) Any boiler that is used as a control device to comply with another subpart of this part, provided that at least 50 percent of the heat input to the boiler is provided by the gas stream that is regulated under another subpart.

§ 63.11237 What definitions apply to this subpart?
Gaseous fuels includes, but is not limited to, natural gas, ***process gas****, landfill gas, coal derived gas, refinery gas, hydrogen, and biogas.*
Gas-fired boiler includes ***any boiler that burns gaseous fuels not combined with any solid fuels****, burns liquid fuel only during periods of gas curtailment, gas supply emergencies, or periodic testing on liquid fuel. Periodic testing of liquid fuel shall not exceed a combined total of 48 hours during any calendar year.*

3.1.8 Open Burning

IDAPA 58.01.01.600 and 616 establishes requirements for open burning. Dynamis does not expect to conduct open burning at the facility however will comply with the requirements under Section 600-616 if any allowable burning is to be conducted at the facility.

3.1.9 Visible Emissions

IDAPA 58.01.01.625 restricts discharge of air pollutants into the atmosphere which is greater than 20% opacity for a period or periods aggregating more than three (3) minutes in any sixty (60) minute period. Dynamis will comply with the IDAPA rule by conducting monthly facility-wide inspections of potential sources of visible emissions, during daylight hours and under normal operating conditions. The inspection will consist of a see/no see evaluation for each potential source. If any visible emissions are observed Dynamis will take corrective action or perform a Method 9 opacity test in accordance with the procedures outlined in IDAPA 58.01.01.625. Dynamis will keep records onsite documenting the monthly visible emission inspection and Method 9 test conducted.

3.1.10 Rules for Control of Fugitive Dust

IDAPA 58.01.01.650 requires that all reasonable precautions be taken to prevent the generation of fugitive dust. Dynamis will comply with fugitive particulate matter regulations through the use of hoods, fans and fabric filters to enclose and vent potential fugitive particulate matter.

3.1.11 Fuel Burning Equipment – Particulate Matter

IDAPA 58.01.01.676 restricts fuel burning sources (larger than 10 MMBtu/hr) to limit the PM combustion emissions to 0.015 gr/dscf for natural gas fuel. Both the primary ignition system and the emergency generator capacity are less than 10 MMBtu/hr. The thermal conversion unit capacity is greater than 10 MMBtu/hr; PM emissions from the unit during peak operations will be 0.0026 gr/dscf (including from primary chamber natural gas combustion), PM emissions from the unit during off-peak operation will be 0.0017 gr/dscf (including from primary chamber natural gas combustion).

3.1.12 Particulate Matter – Process Weight Limitations

IDAPA 58.01.01.701 promulgates restrictions on PM for the entire facility based on process weight. Fuel burning equipment at the facility is not subject to this requirement. Process weight calculations are shown in Table 3-2 below.

Table 3-2 Process Weight Calculations

Source	Process Weight, PW (lb/hr)	PM-10 Emissions - Estimated (lb/hr)	Process Weight Rate Limitations - E (lb/hr)	In Compliance? (Y/N)
Ash Handling System	3,400	0.45	5.91	Y
Cooling Towers	186,148	0.02	21.3	Y

E = Emission Limit = $0.045(PW)^{0.60}$, if PW is less than 9,250 lb/hr. E = $1.10(PW)^{0.25}$, if PW is greater than 9,250 lb/hr.

3.1.13 Odors

IDAPA 58.01.01.775-776 requires no emissions of odorous gases, liquids, or solids to the atmosphere in such quantities as to cause air pollution. Dynamis will comply with this requirement by keeping records of any odor complaints received and will take appropriate action for each complaint which has merit.

3.2 Federal Regulatory Applicability

A review of applicable Federal Rules is provided in Table 3-3. Included in Appendix C is the completed federal regulatory applicability PTC form.

Table 3-3 Federal Regulatory Applicability Summary

Section	Description	Regulatory Citation	Applicable?
3.2.1	National Ambient Air Quality Standards (NAAQS)- (dispersion modeling)	40 CFR Part 50	Yes
3.2.2	Title V Operating Permit	40 CFR Part 70	Yes
3.2.3	Air Pollutants (NESHAPs)	40 CFR Parts 61, 63	No
3.2.4	New Source Review (NSR)	40 CFR Part 52	No
3.2.5	New Source Performance Standards (NSPS)	40 CFR Part 60	Yes
3.2.6	Acid Rain Requirements	40 CFR Parts 72–78	No
3.2.7	Risk Management Programs For Chemical Accidental Release Prevention	40 CFR Part 68	No
3.2.8	Mandatory Greenhouse Gas Reporting	40 CFR Part 98	Yes

3.2.1 National Ambient Air Quality Standards (NAAQS)

Primary National Ambient Air Quality Standards (NAAQS) are identified in 40 CFR Part 50 and define levels of air quality, which the United States Environmental Protection Agency (USEPA) deems necessary to protect the public health. Secondary NAAQS define levels of air quality, which the USEPA judges necessary to protect public welfare from any known, or anticipated adverse effects of a pollutant. Examples of public welfare include protecting wildlife, buildings, national monuments, vegetation, visibility, and property values from degradation due to excessive emissions of criteria pollutants.

Specific standards for the following pollutants have been promulgated by USEPA: PM_{10}, SO_2, NO_x, CO, ozone, and lead. The Dynamis facility will emit PM_{10}, SO_2, NO_x, CO, lead, and VOCs, a precursor to ozone. The facility will be a minor source for all listed pollutants.

3.2.2 Title V (Part 70) Operating Permit

Title V of the Clean Air Act (CAA) created the federal operating permit program. These permitting requirements are codified in 40 CFR Part 70. These permits are required for major sources with a PTE (considering federally enforceable limitations) greater than 100 tpy for any criteria pollutant, 25 tpy for all hazardous air pollutants (HAPs) in aggregate, or 10 tpy of any single HAP. Dynamis' potential to emit of any criteria pollutant is less than 100 tons per year, the potential to emit of all HAPs in aggregate is less than 25 tpy, and the potential to emit of any single HAP is less than 10 tpy. However, as discussed in Section 3.1.6 above, Dynamis will be subject to 40 CFR Part 60, Subpart Eb. Section 129 of the Clean Air Act states:

> *Beginning (1) 36 months after the promulgation of a performance standard under subsection (a) and section 111 applicable to a category of solid waste incineration units, or (2) the effective date of a permit program under title V in the State in which the unit is located, whichever is later, each unit in the category shall operate pursuant to a permit issued under this subsection and title V. Permits required by this subsection may be renewed according to the provisions of title V.*

Therefore, Dynamis will be subject to Title V requirements; Dynamis will apply for a Tier 1 Operating permit from the State of Idaho within one year of commencement of operations.

3.2.3 National Emission Standards for Hazardous Air Pollutants (NESHAPs)

National Emission Standards for Hazardous Air Pollutants are discussed in Section 3.1.7 above.

3.2.4 New Source Review (NSR) Requirements

Ada County is designated as an attainment area for all criteria pollutants. Therefore, the prevention of significant deterioration (PSD) regulations codified in 40 CFR Part 52 could potentially apply to the proposed facility. The PSD rule applies to: (1) a new major source that has the potential to emit 100 tons per year or more for any criteria pollutant for a facility that is one of the 28 industrial source categories listed in 40 CFR § 52.21(b)(1)(i)(a); or (2) a new major source that has the potential to emit 250 tons per year or more of a regulated pollutant if the facility is not on the list of industrial source categories; or (3) a modification to an existing major source that results in a net emission increase greater than a PSD significant emission rate as specified in 40 CFR § 52.21 (b)(23)(i); or (4) a modification to an existing minor source that is major in itself. The Dynamis facility does not fall under one of the 28 industrial source categories, nor will the PTE exceed 250 tpy for any regulated pollutant nor 100,000 tpy for CO_{2e} (Greenhouse Gases). Therefore, Dynamis is not subject to PSD regulations.

3.2.5 New Source Performance Standards (NSPS)

New Source Performance Standards are discussed in Section 3.1.6 above.

3.2.6 Acid Rain Requirements

The acid rain requirements codified in 40 CFR Parts 72-78 apply only to utilities and other facilities that combust fossil fuel and generate electricity for wholesale or retail sale. The proposed facility will not combust fossil fuel as the primary fuel. Therefore, the facility is not subject to the acid rain provisions and will not require an acid rain permit.

3.2.7 Risk Management Programs for Chemical Accidental Release Prevention

The facility is not subject to the Chemical Accidental Release Prevention Program and will not be required to develop a Risk Management Plan (RMP). Facilities that produce, process, store, or use any regulated toxic or flammable substance in excess of the thresholds listed in 40 CFR Part 68 must develop a RMP. The facility does not store any regulated toxic or flammable substances in excess of the applicable thresholds. A RMP is not necessary for this facility.

3.2.8 Mandatory Greenhouse Gas Reporting

Greenhouse gas reporting requirements are codified under 40 CFR Part 98. Part 98.2 describes facilities who are subject to mandatory reporting requirement. The Dynamis facility does not fall under any source category that is listed in Table A–3 or A-4 of the subpart. However, Part 98.2(a)(3) states the following:

> (3) A facility that in any calendar year starting in 2010 meets all three of the conditions listed in this paragraph (a)(3) . For these facilities, the annual GHG report must cover emissions from stationary fuel combustion sources only.
>
> (i) The facility does not meet the requirements of either paragraph (a)(1) or (a)(2) of this section.
>
> (ii) The aggregate maximum rated heat input capacity of the stationary fuel combustion units at the facility is 30 mmBtu/hr or greater.
>
> (iii) The facility emits 25,000 metric tons CO_{2e} or more per year in combined emissions from all stationary fuel combustion sources.

The heat input capacity of the facility will be greater than 30 MMBtu/hr, and emissions of CO_{2e} from the Dynamis facility are estimated to be 88,600 tonne/yr (97,690 ton/yr). Therefore, Dyanmis will be subject to the GHG reporting requirements in 40 CFR Part 98.

4.0 EMISSIONS SUMMARY

This section includes all criteria air pollutant and TAPs calculations. A complete emissions inventory is included in Appendix F.

The facility will operate 24 hours per day, 7 days per week, and approximately 8,760 hours per year in a 'peak/off-peak' mode. The majority of MSW, 380 tpd, will be processed between the hours of 7am and 11pm (16 hours). The remaining MSW, 28 tpd, will be processed between 11pm and 7am. The facility will receive approximately 571 tpd of MSW from Ada County. The thermal conversion unit will convert 408 tpd of municipal solid waste to electricity seven days per week. The remaining 163 tpd will stay on the tipping floor and will be used on weekends or other off days when Ada County is unable to deliver the required waste tonnage.

The facility will process 408 total tons of MSW per day. The MSW is expected to contain moisture as well as un-combustible materials such as glass and metal. It is conservatively assumed that 90% of the MSW received will be combustible materials; therefore, emissions estimates are based on 367 tpd combustible material (342 tpd peak, 25 tpd off-peak).

The primary gasification chambers include an ignition system which will be fired using natural gas. The primary ignition systems will use a maximum of 112,000 standard cubic feet per day (scf/day) of natural gas; natural gas usage will be independent of the thermal unit peak/off-peak operation.

Emissions factors from the thermal conversion units are based on over 15 years of source test data from similar units installed in Alaska and Wyoming. These units were in operation prior to the widespread popularity of public education programs for the general public regarding recycling and household hazardous waste disposal as well as introduction of such programs by private and municipal waste collection and disposal entities. Therefore, even though the source tests on the Alaska and Wyoming units were conducted during burns of MSW, it is likely that household hazardous wastes such as batteries, used oil, and other household chemicals were included in the MSW. Ada County has both recycling and household hazardous waste collection programs in place. In addition, prior to materials entering the primary gasification chambers, the MSW will be visually inspected on the tipping floor. It is unlikely that hazardous materials will enter the thermal conversion units; however, since emissions factors are based on source testing conducted when hazardous materials were likely present, the thermal conversion units emissions estimates address this issue (see mercury caveat in Section 4.2). Consistency with operating parameters similar to operating parameters during the source tests is discussed in Section 2.3 above.

In addition to source tests of stack emissions from the thermal conversion units, testing of ash generated during the source tests was also conducted. The ash testing data (TCLP mg/L results) was converted to an approximate mg/kg concentration to develop emission factors for pollutant emissions from the ash system. Approximately 10% by weight of the total MSW throughput (approximately 40.8 tpd) will be converted to ash. It was assumed that 5% of the ash would be airborne particulate; the rest is glass, metal pieces, or large non airborne ash particles collected for use as backfill material or other beneficial uses. Of the particulate that becomes airborne, it was conservatively assumed that 75% would be $PM_{10}/PM_{2.5}$. As discussed in Section 2.3, emissions from the ash handling system will be controlled by the ash system baghouse, which has a manufacturer guaranteed emission rate of 0.005 grains/dscf for particles size 10 micron and smaller. The baghouse will exhaust through a stack outside of the ash handling room, and will exhaust for approximately 45 minutes every hour.

Documentation of compliance with NAAQS standards, Acceptable Ambient Concentrations (AACs) for IDAPA 58.01.01.585 non-carcinogen TAPs and Acceptable Ambient Concentrations for Carcinogens for IDAPA 58.01.01.586 carcinogen TAPs is demonstrated through air dispersion modeling analysis; details and results are described in Appendix G.

4.1 Criteria Pollutants

As discussed in Section 2.3, sources of criteria pollutant emissions at the Dynamis facility will be natural gas combustion from the primary chamber ignition system, emissions from the thermal conversion unit, diesel combustion from the emergency generator and particulate emissions from the ash handling system and cooling towers. Emission factors for natural gas combustion were obtained from AP-42 Section 1.4. Thermal conversion unit emissions factors were obtained from source tests of similar units at facilities in Alaska and Wyoming. Emissions factors for PM_{10}, $PM_{2.5}$, NO_x and CO for diesel fuel combustion from the emergency generator were provided by the manufacturer. Diesel combustion emission factors for SO_2 and VOC were obtained from AP-42 Section 3.3. It was conservatively assumed that 5% of the ash generated will be airborne particulate. Cooling tower emission factors for $PM_{10}/PM_{2.5}$ were obtained from AP-42 Section 13.4 for induced draft towers. Electronic copies of the Excel spreadsheets used to calculate facility emissions are included with the emissions inventory in Appendix F.

Table 4-1 on the following page shows the controlled facility-wide PTE for criteria pollutants.

Table 4-1 Facility Criteria Pollutant PTE

Description	Criteria Pollutants											
	NOx Emissions		CO Emissions		PM-10/PM-2.5 Emissions		SOx Emissions		VOC Emissions		Lead Emissions	
	lb/hr	T/yr	lb/hr	T/yr	lb/hr	T/yr	lb/hr	T/yr	lb/hr	T/yr	lb/hr	T/yr
Thermal Conversion Unit - Peak	29.93	87.38	10.90	31.83	3.66	10.68	8.54	24.94			0.03	0.09
Thermal Conversion Unit - OffPeak	4.41	6.44	1.61	0.54	0.54	0.79	1.26	1.84			0.00	0.01
Cooling Tower					0.02	0.08						
Ash System					0.45	1.97					5.10E-04	2.23E-03
Emergency Generator	1.30	0.33	0.26	0.07	0.03	0.01	0.98	0.25	1.19	0.30		
Ignition Systems	0.47	2.04	0.39	1.72	0.02	0.09	0.00	0.00	0.03	0.11	2.33E-06	1.02E-05
Total	**36.104**	**96.188**	**13.164**	**34.149**	**4.720**	**13.616**	**10.786**	**27.030**	**1.211**	**0.409**	**0.0358**	**0.099**

4.2 Toxic Air Pollutants

Sources of IDAPA toxic air pollutants (TAPs) at the Dynamis facility include emissions from natural gas combustion, emissions from the thermal conversion unit, diesel combustion from the emergency generator and particulate emissions from the ash handling system. As discussed in Section 2.3 above, emission factors for natural gas combustion TAPs were obtained from AP-42 Section 1.4. Thermal conversion unit TAPs emissions factors (with the exception of mercury) were obtained from source tests of similar units at facilities in Alaska and Wyoming. Mercury emission factors are also based on similar unit source tests, however, these source tests were conducted in the early 1990's. Since that time, data shows that there has been significant reduction in the mercury concentration of incoming municipal solid waste. For this reason, the mercury emission factors were conservatively reduced to be representative of modern waste streams. Diesel combustion emission factors for TAPs were obtained from AP-42 Section 3.3. Ash testing data (TCLP mg/L results) was converted to an approximate mg/kg concentration to develop emission factors for pollutant emissions from the ash system. The emission inventory is based on maximum facility-wide fuel consumption of 112,000 scf/day of natural gas. The diesel generator will operate a maximum of 500 hours/year, and will be tested a maximum of four times per quarter.

Table 4-2 below shows the controlled facility-wide PTE for TAPs.

Table 4-2 Facility TAPs PTE

NON-CARCINOGENS (POUNDS PER HOUR)				
Pollutant	CAS #	TAP Emissions (lb/hr)	Screening Level (lb/hr)	Modeling? (Y/N)
Acrolein	107-02-8	1.13E-04	0.017	No
Aluminum	7429-90-5	1.08E-01	6.67E-01	No
Antimony	7440-36-0	1.13E-03	3.3E-02	No
Barium	7440-39-3	8.88E-04	3.3E-02	No
Chromium	7440-47-3	2.62E-03	3.3E-02	No
Cobalt	7440-48-4	1.84E-03	3.3E-03	No
Copper	7440-50-8	1.44E-03	6.7E-02	No
Ethylbenzene	100-41-4	0.00E+00	2.9E+01	No
Fluoride (as F) (Hydrogen Fl)	16984-48-8	8.83E+00	1.67E-01	Yes
Fluorene	7782-41-4	0.00E+00	1.67E-01	No
Hexane	110-54-3	8.40E-03	1.2E+01	No
Hydrogen Chloride	7647-01-0	1.19E+00	5.0E-02	Yes
Manganese	7439-96-5	9.60E-03	3.33E-01	No
Mercury	7439-97-6	3.56E-03	3.E-03	Yes
Molybdenum	7439-98-7	3.21E-03	3.33E-01	No
Naphthalene*	91-20-3	3.04E-06	9.10E-05	No
Pentane	109-66-0	1.21E-02	1.18E+02	No
Phosphorous	7723-14-0	2.66E-03	7.E-03	No
Selenium	7782-49-2	3.18E-03	1.3E-02	No
Silver	7440-22-4	2.92E-07	7.0E-03	No
Toluene	108-88-3	5.15E-04	2.5E+01	No
o-Xylene	1330-20-7	3.48E-04	2.9E+01	No
Zinc	7440-66-6	3.91E-01	6.67E-01	No

*Although listed as a noncarcinogen in the Rules, DEQ has determined that naphthalene is a possible/probable carcinogen. Compliance for naphthalene emissions should be based on the EL or AACC listed in Section 586 for PAH.

CARCINOGENS (POUNDS PER HOUR)				
Pollutant	CAS #	TAP Emissions (lb/hr)	Screening Level (lb/hr)	Modeling? (Y/N)
Acetaldehyde	75-07-0	9.37E-04	3.00E-03	No
Arsenic	7440-38-2	9.33E-07	1.50E-06	No
Benzene	71-43-2	1.15E-03	8.0E-04	Yes
Beryllium	7440-41-7	5.60E-08	2.8E-05	No
Cadmium	7440-43-9	4.98E-03	3.7E-06	Yes
Chromium VI	7440-47-3	0.00E+00	5.6E-07	No
Dioxin/Furan	1746-01-6	1.21E-06	1.50E-10	Yes
Formaldehyde	50-00-0	1.79E-03	5.1E-04	Yes
Nickel	7440-02-0	2.17E-02	2.7E-05	Yes
Benzo(a)pyrene	50-32-8	5.60E-09	2.0E-06	No
Benz(a)anthracene	56-55-3	8.40E-09	2.0E-06	No
Benzo(b)fluoranthene	205-82-3	8.40E-09	2.0E-06	No
Benzo(k)fluoranthene	205-99-2	8.40E-09	2.0E-06	No
Chrysene	218-01-9	8.40E-09	2.0E-06	No
Dibenzo(a,h)anthracene	53-70-3	5.60E-09	2.0E-06	No
Indeno(1,2,3-cd)pyrene	193-39-5	8.40E-09	2.0E-06	No
Total PAHs		2.45E-07	9.10E-05	No

5.0 LIMITATIONS ON POTENTIAL TO EMIT

Dynamis proposes the following limits on the operations and equipment parameters at the facility. These proposed emissions limits coincide with the data utilized in the ambient air modeling which demonstrates compliance with ambient air quality standards.

5.1 Operating Hours

- Equipment at the facility, with the exception of the emergency diesel generator, shall operate for a total of 8760 hours of operation per year.

- The emergency generator shall be diesel fired and shall operate a maximum of 500 hours per year. The generator will operate no more than 4 times per quarter.

- The facility shall keep operating logs to record annual equipment usage.

5.2 Fuel and Material Throughput

- The primary chamber ignition system is capable of running on natural gas. The emission inventory is based on maximum facility-wide fuel consumption of 112,000 standard cubic feet per day of natural gas. The facility shall keep a record of the total amount of natural gas consumed each day.

- Thermal conversion unit throughput shall be limited to 408 tons of material per day. The facility shall keep a record of the hourly material throughput.

5.3 Control Equipment

- Emissions from the thermal unit (including primary chamber ignition system natural gas combustion) will be controlled by the scrubber located between the boiler and the exhaust stack. The scrubber manufacturer has guaranteed an emission rate of 0.595 lb/hr HCl, 71.25% control of SO_2 and 41% control of $PM_{2.5}$.

- The ash handling dust collector (baghouse) has a manufacturer guaranteed $PM_{2.5}$ emission rate of less or equal to 0.005 grains/dscf.

5.4 Stack Parameters

- Constructed stack heights shall be no lower than the stack heights specified in the ambient air modeling analysis included in Appendix G.

APPENDIX A

Site Location Map and Plot Plan

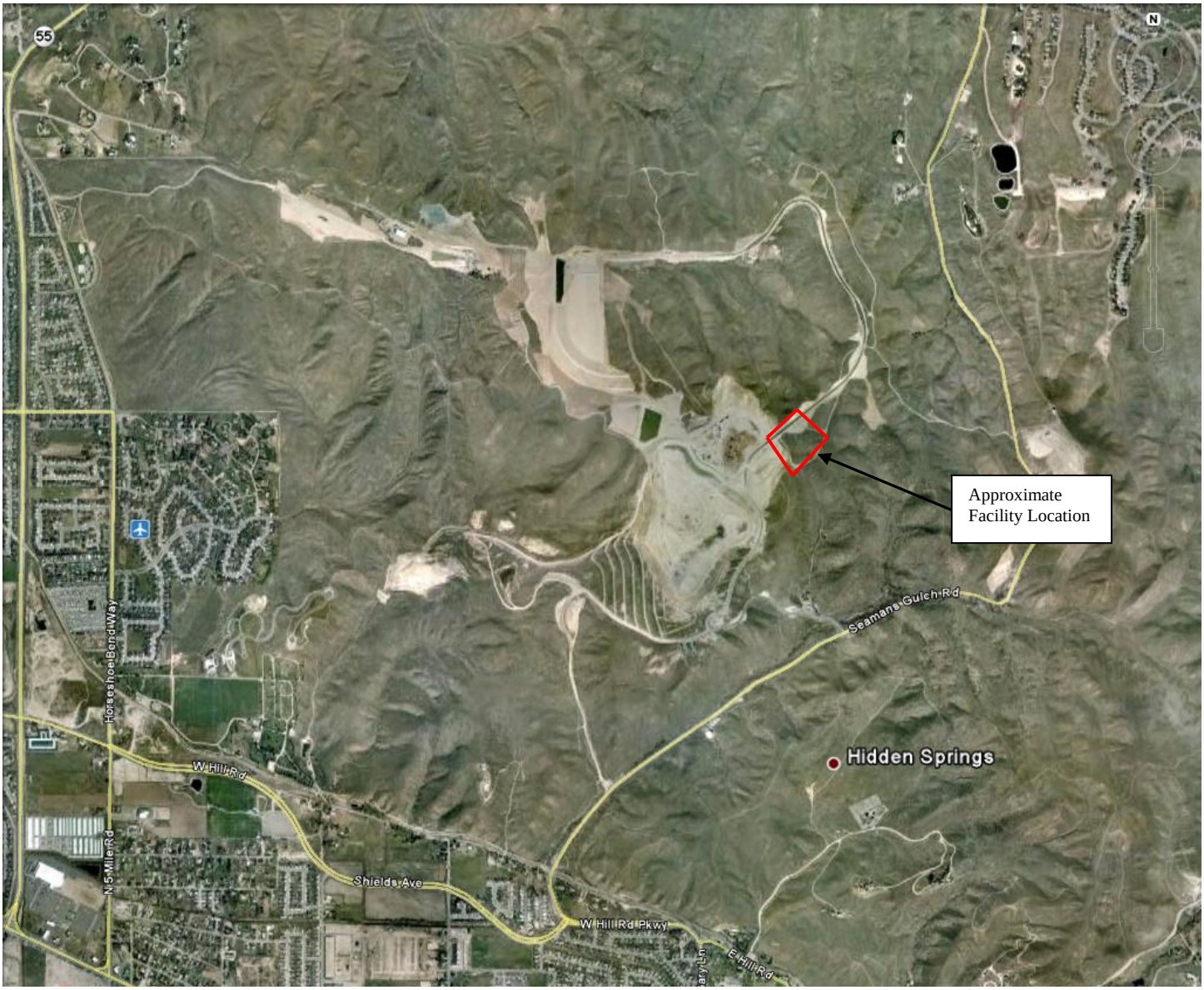

Dynamis Energry, LLC
Ada County Landfill WTE Facility

Figure 1 – Site Location

HIDDEN HOLLOW LANDFILL WASTE TO ENERGY PLANT

SITUATED WITHIN THE NORTHEAST QUARTER OF THE NORTHEAST QUARTER (NE4 NE4) OF SECTION 12, TOWNSHIP 4 NORTH, RANGE 1 EAST, BOISE MERIDIAN, AND GOVERNMENTLOT 1 OF SECTION 7 AND GOVERNMENT LOT 7 OF SECTION 6, TOWNSHIP 4 NORTH, RANGE 2 EAST, BOISE MERIDIAN, ADA COUNTY IDAHO

ADA COUNTY, IDAHO

prepared by:

DYNAMIS ENERGY, LLC

776 EAST RIVERSIDE DRIVE, SUITE 150
EAGLE, IDAHO 83616
CONTACT: DOYLE PERGANDE, P.E.
PHONE: (208) 938-2680

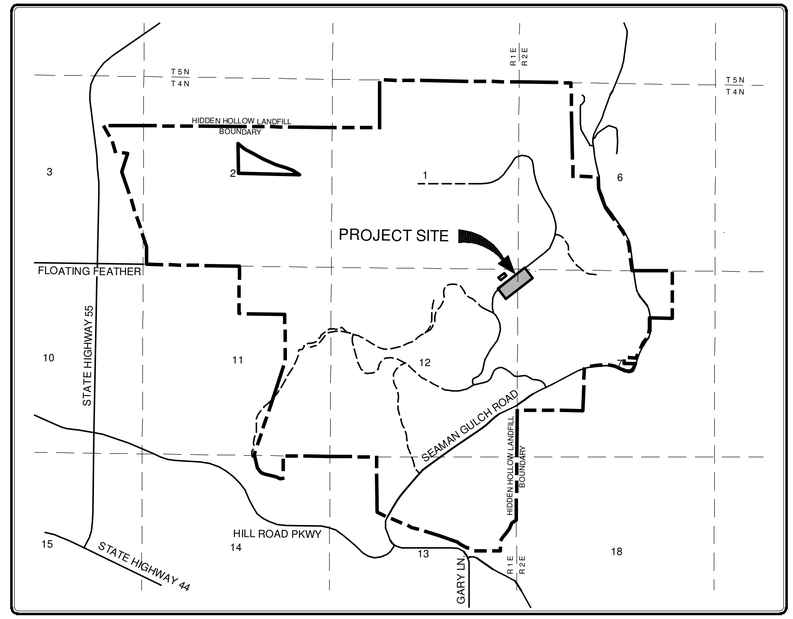

VICINTY MAP
1"=2000'

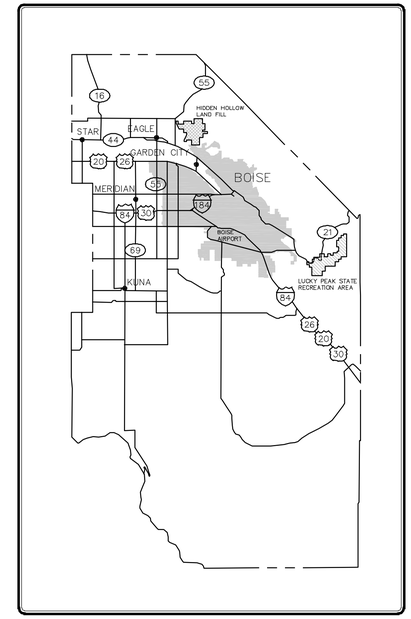

ADA COUNTY MAP
NOT TO SCALE

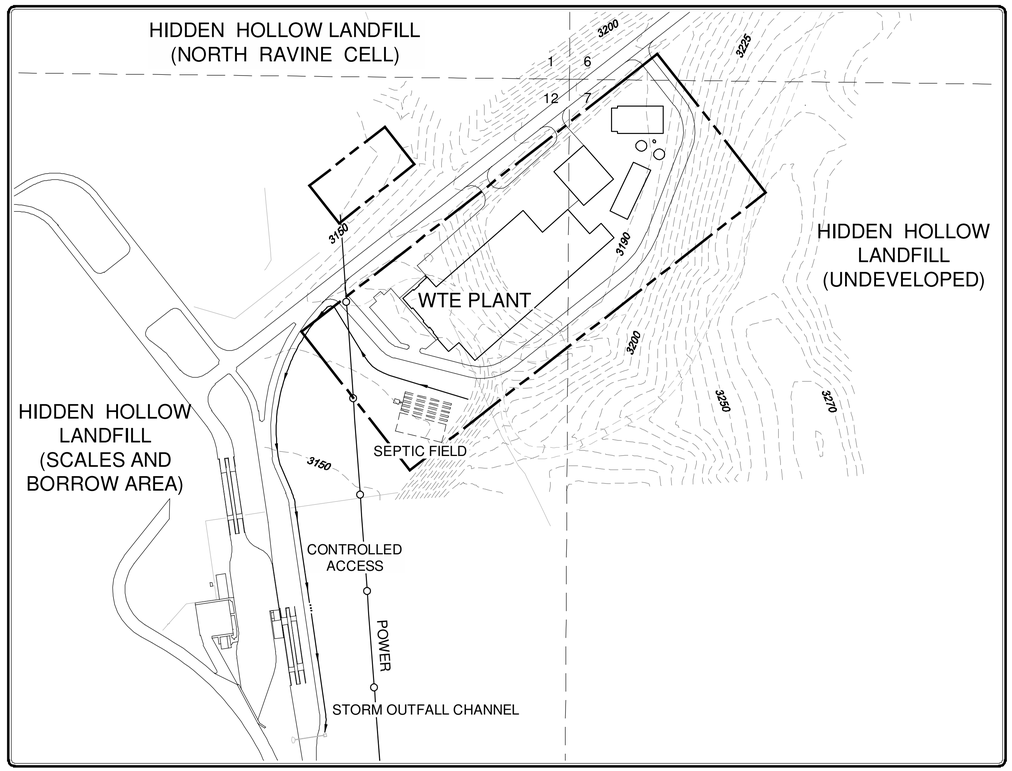

LOCATION MAP
1"=150'

BASIS OF BEARING

THE WEST LINE OF THE NORTHWEST QUARTER OF SECTION 7, TOWNSHIP 4 NORTH, RANGE 2 EAST, BOISE MERIDIAN, BEING A FOUND A ⅝ INCH REBAR WITH CAP, MARKED PLS 5461, FROM WHICH A FOUND 3 ¼ INCH BRASS CAP MONUMENT MARKING THE WEST QUARTER CORNER OF SAID SECTION 7 BEARS SOUTH 02°13'17" WEST, 2611.35 FEET.

BASIS OF ELEVATION

HORIZONTAL DATUM: NAD83/99, IDAHO STATE PLANE COORDINATES, IDAHO WEST ZONE 1103, ADJUSTED FOR SCALE AND ELEVATION BY A COMBINED FACTOR OF 1.0001832259.

VERTICAL DATUM: NAVD88

UNITS: U.S. SURVEY FEET

CONTROL: N.G.S. STATION "IDTD", PID OH1488
N.G.S. STATION "BOIS A", PID AH9750

PER "SURVEY CONTROL DIAGRAM, HIDDEN HOLLOW LANDFILL" PREPARED BY DAVID S. SHORT, P.L.S. (2009).

SHEET INDEX

SHEET NO.	PAGE	SHEET NAME
C1	1 OF 7	COVER SHEET
C2	2 OF 7	EXISTING CONDITIONS PLAN
C3	3 OF 7	TYPICAL SECTIONS AND LEGEND
C4	4 OF 7	DIMENSIONING PLAN
C5	5 OF 7	GRADING PLAN
C6	6 OF 7	UTILITY PLAN
C7	7 OF 7	SITE CROSS SECTIONS

PRELIMINARY NOT APPROVED FOR CONSTRUCTION

REVISIONS

DATE: MARCH 5, 2012
DESIGNED BY: STAFF
DRAWN BY: STAFF
REVIEWED BY:
PROJECT:
ISSUE:

COPYRIGHT ALL DESIGNS, REPORTS, FIELD DATA, FIELD NOTES, DRAWINGS, PROPOSALS, CALCULATIONS, ESTIMATES, OR ANY REPRESENTATION CONTAINED HEREON ARE THE SOLE PROPERTY OF DYNAMIS ENERGY, LLC UNLESS PREVIOUSLY EXPUNGED BY PRECEDENCE OR AGREEMENT

DYNAMIS ENERGY, LLC
ADA COUNTY LANDFILL WASTE TO ENERGY PLANT
COVER SHEET

COVER SHEET

DYNAMIS ENERGY

C1

SHEET 1 OF 7

V. 10 R. 2

path: C:\0-Scott\Dynamis Landfill\03_Design\ file name:WTE-COVER.dwg | plot date: March 03, 2012 | plotted by: ssanders

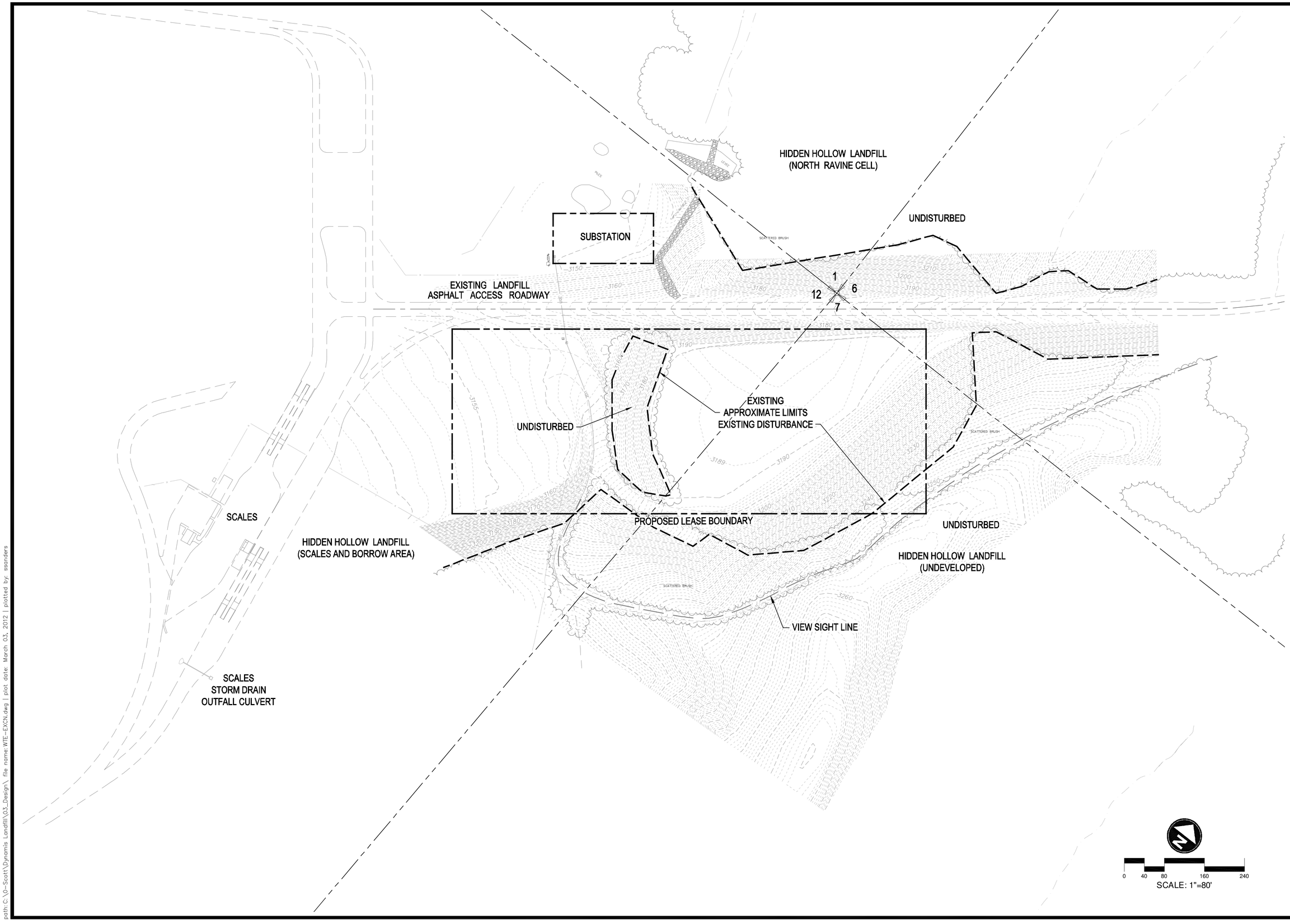

PRELIMINARY NOT APPROVED FOR CONSTRUCTION

REVISIONS

DATE: MARCH 5, 2012
DESIGNED BY: STAFF
DRAWN BY: STAFF
REVIEWED BY:
PROJECT:
ISSUE:

COPYRIGHT ALL DESIGNS, REPORTS, FIELD DATA, FIELD NOTES, DRAWINGS, SPECIFICATIONS, CALCULATIONS, ESTIMATES, OR ANY REPRESENTATION CONTAINED HEREON ARE THE SOLE PROPERTY OF DYNAMIS ENERGY, LLC UNLESS PREVIOUSLY EXPRESSED BY PRECEDENCE OR AGREEMENT

DYNAMIS ENERGY, LLC

HIDDEN HOLLOW LANDFILL WASTE TO ENERGY PLANT
PLAN SHEET

EXISTING CONDITIONS PLAN

DYNAMIS ENERGY

C2

SHEET 2 OF 7

V. 10 R._ 2

path: C:\0-Scott\Dynamis Landfill\03_Design\ file name: WTE-EXCN.dwg | plot date: March 03, 2012 | plotted by: ssanders

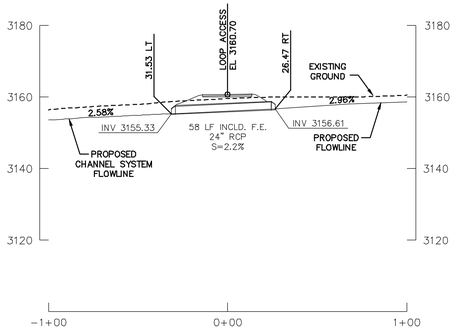

S1/C5 SOUTH LOOP ENTRY STORM CULVERT

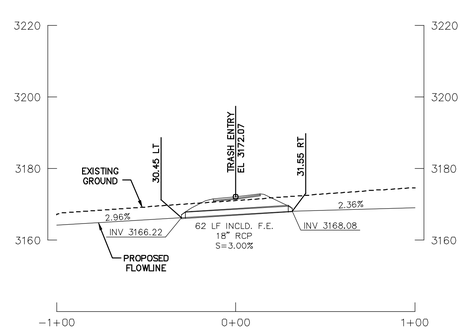

S2/C5 MSW HAULER ENTRY STORM CULVERT

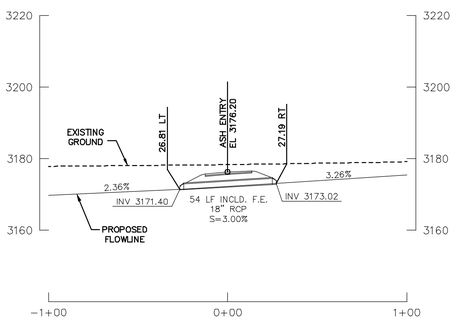

S3/C5 ASH ENTRY STORM CULVERT

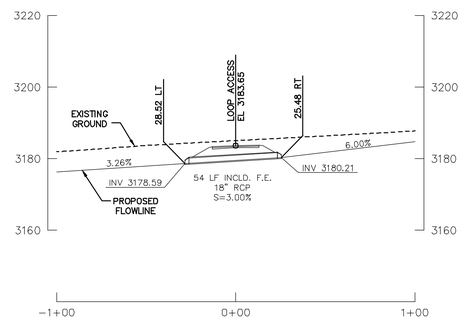

S4/C5 NORTH LOOP ENTRY STORM CULVERT

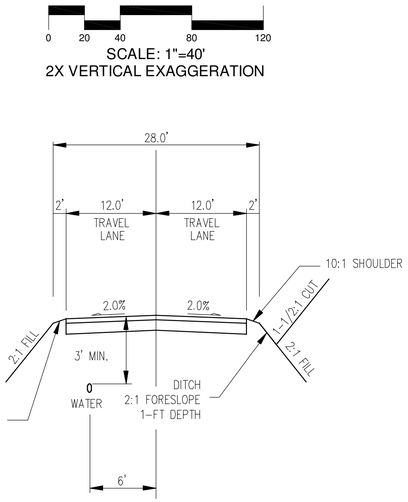

ACCESS LOOP

N.T.S.

IDAHO STANDARDS FOR PUBLIC WORKS CONSTRUCTION
REFERENCED STANDARD DRAWINGS:

SD-506A STANDARD 4" TRAFFICE RATED CLEAN-OUT
SD-603 INLET CATCH BASIN TYPE III
SD-610A CATCH BASIN GRATE TYPE III
SD-611 STANDARD CONCRETE CATCH MANHOLE
SD-615 SHALLOW MANHOLE TYPE I
SD-616 MANHOLE COLLAR
SD-617 STANDARD MANHOLE FRAME, COVER AND RISER
SD-625 PVC DRAIN BASIN STRUCTURE

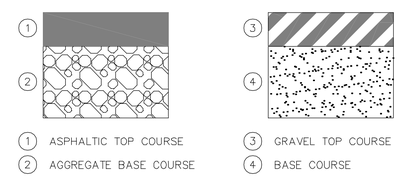

CONSTRUCT PER SITE SPECIFIC GEOTECHNICAL REPORT
PREPARED BY STRATA, INC.

PAVEMENT SECTIONS

N.T.S.

LEGEND

CENTERLINE	PROPOSED CURB AND GUTTER
RIGHT-OF-WAY	PROPOSED SANITARY SEWER
PROPERTY LINE	PROPOSED STORM DRAIN
EASEMENT	PROPOSED RETAINING WALL
EXISTING CURB AND GUTTER	PROPOSED WATER
EXISTING ELECTRICAL	SET NAIL
EXISTING GAS	SET REBAR
EXISTING SANITARY SEWER	SET CHISELED "X"
EXISTING STORM DRAIN	SET MONUMENT
EXISTING TELEPHONE	SET BRASS CAP IN HANDHOLE
EXISTING WATER	HORIZONTAL CONTROL POINT
EXISTING FENCE	PROPOSED MANHOLE
FOUND NAIL	PROPOSED STORM DRAIN
FOUND REBAR	PROPOSED CATCH BASIN WITH WING
FOUND CHISELED "X"	PROPOSED DOUBLE CHECK VALVE
FOUND BRASS CAP	PROPOSED FIRE HYDRANT
FOUND BRASS CAP IN HANDHOLE	PROPOSED WATER METER
EXISTING STREET LIGHT	PROPOSED WATER VALVE
EXISTING POWER POLE	PROPOSED AIR RELEASE VALVE
EXISTING MANHOLE	GRADE BREAK/GRADE CHANGE/PVI
EXISTING CLEANOUT	GRADE BREAK/GRADE CHANGE
EXISTING CATCH BASIN	CONCRETE
EXISTING CATCH BASIN	SAFETY POST
EXISTING DOUBLE CHECK VALVE	
EXISTING FIRE HYDRANT	

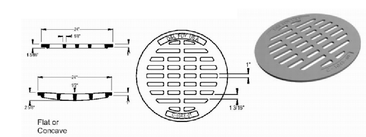

SLOTTED MANHOLE LID

SCALE 1/2"=1'

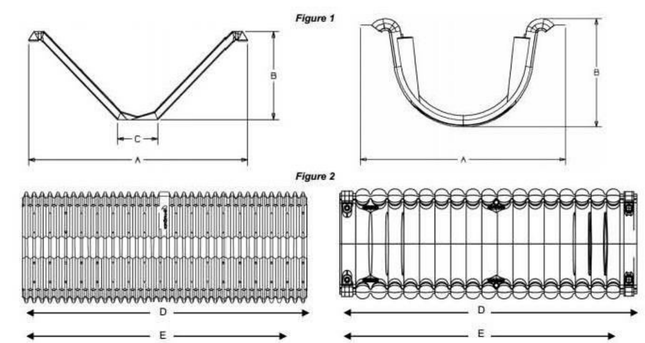

Item Description	Item #	12" Depth Trapezoidal	24" Depth Trapezoidal	24" Depth Semi-Circular
Overall exterior width	A	50.00 in / 1270.00 mm	76.00 in / 1930.40 mm	39.00 in / 990.60 mm
Overall exterior height	B	16.25 in / 412.75 mm	29.50 in / 749.30 mm	19.00 in / 482.60 mm
Bottom channel exterior width	C	10.00 in / 254.00 mm	14.00 in / 355.60 mm	N/A (Rounded Bottom)
Overall exterior length	D	120.00 in / 3048.00 mm	113.00 in / 2870.20 mm	93.00 in / 2362.20 mm
Lay length	E	112.00 in / 2844.80 mm	100.00 in / 2540.00 mm	88.00 in / 2235.20 mm
Weight per part	N/A	52.00 lb / 23.59 kg	89.00 lb / 40.37 kg	36.00 lb / 16.33 kg

Note: measurements above are overall part dimensions and are not representative of actual flow areas or earthen fill area.

"SmartDitch" TRAPEZODIAL HDPE CHANNEL SYSTEM

SCALE 1/2"=1'

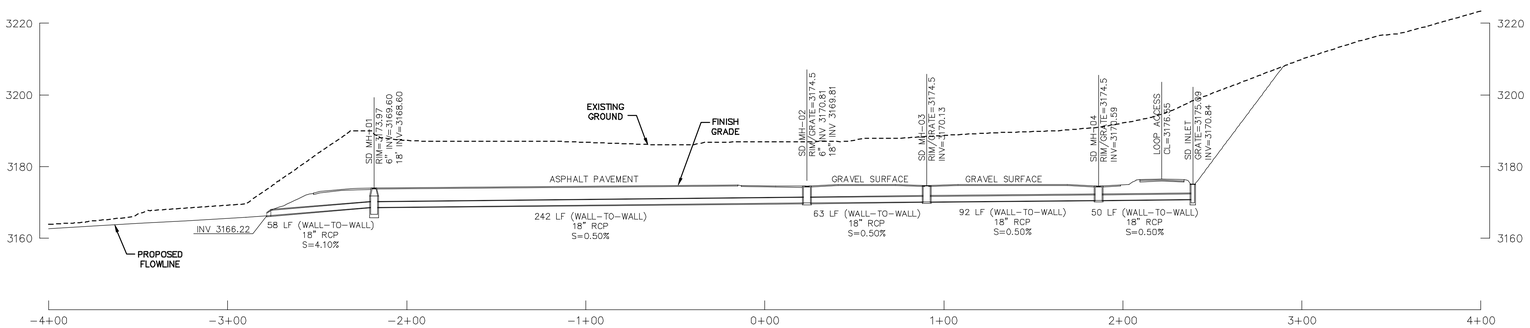

S5/C5 LOOP ROAD OUTFALL STORM CULVERT

PRELIMINARY NOT APPROVED FOR CONSTRUCTION

REVISIONS

DATE: MARCH 5, 2012
DESIGNED BY: STAFF
DRAWN BY: STAFF
REVIEWED BY:
PROJECT:
ISSUE:

COPYRIGHT ALL DESIGNS, REPORTS, FIELD DATA, FIELD NOTES, DRAWINGS, SPECIFICATIONS, ESTIMATES, OR ANY REPRESENTATION CONTAINED HEREON ARE THE SOLE PROPERTY OF DYNAMIS ENERGY, LLC UNLESS PREVIOUSLY EXPUNGED BY PRECEDENCE OR AGREEMENT

DYNAMIS ENERGY, LLC

ADA COUNTY LANDFILL WASTE TO ENERGY PLANT
DETAIL SHEET

TYPICAL SECTIONS AND LEGEND

DYNAMIS ENERGY

C3

SHEET 3 OF 7

V. 10 R. 2

path: C:\0-Scott\Dynamis Landfill\03_Design\ file name: WTE-NOTES.dwg | plot date: March 03, 2012 | plotted by: ssanders

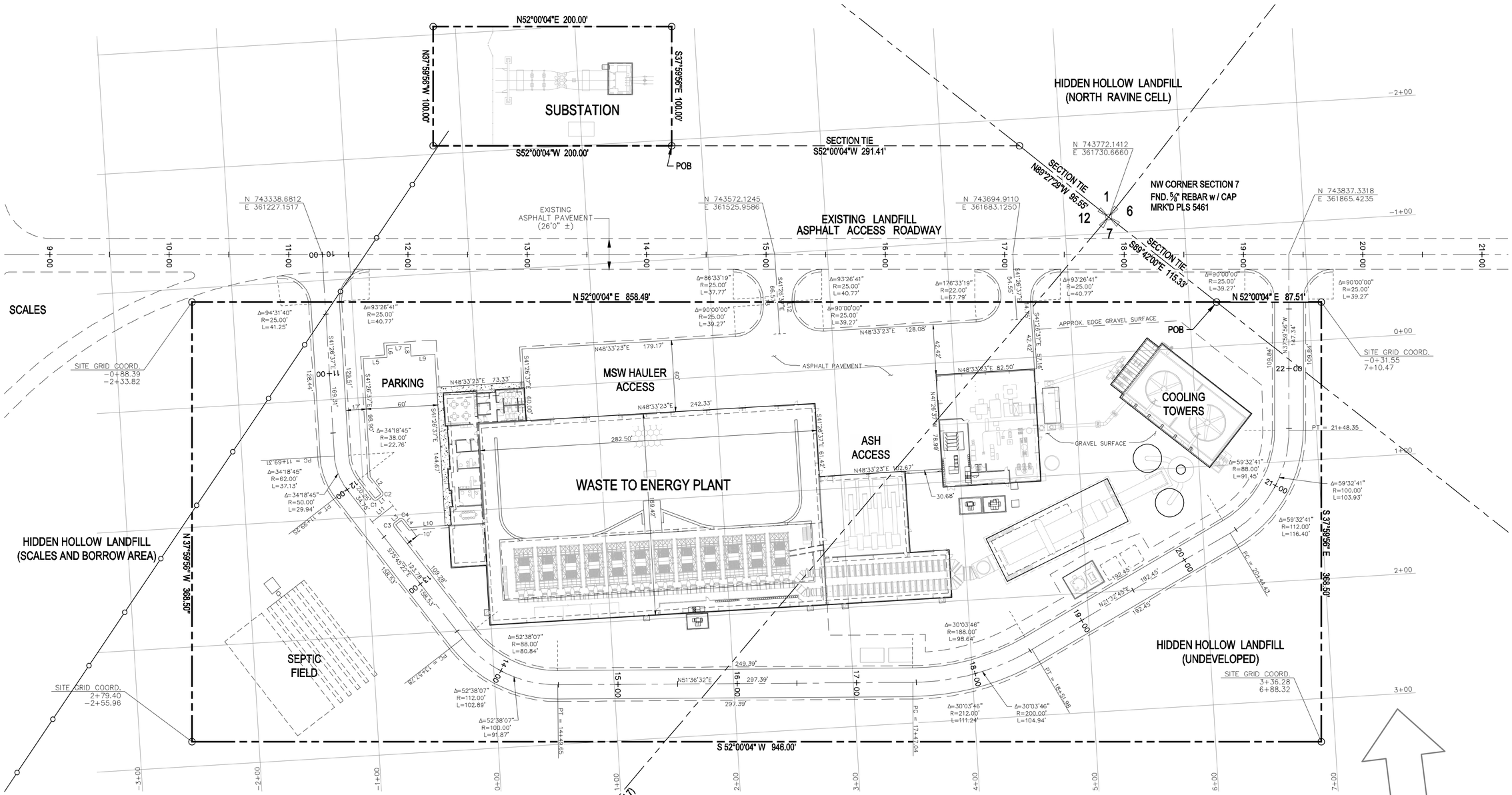

CURVE TABLE			
CURVE	DELTA	RADIUS	LENGTH
C1	Δ=90°00'00"	R=2.50	L=3.93
C2	Δ=90°00'00"	R=2.50	L=3.93
C3	Δ=90°00'00"	R=2.50	L=3.93
C4	Δ=90°00'00"	R=2.50	L=3.93

LINE TABLE		
LINE	LENGTH	BEARING
L1	5.00	N14°14'38"E
L2	16.47	N75°45'22"W
L3	5.00	N14°14'38"E
L4	8.73	N75°45'22"W
L5	20.00	S48°33'23"W
L6	10.00	N41°26'37"W
L7	20.00	S48°33'23"W
L8	10.00	N41°26'37"W
L9	20.00	S48°33'23"W
L10	29.45	S48°33'23"W
L11	22.00	N14°14'38"E
L12	1.74	N41°26'37"W
L13	6.19	N41°26'37"W

DESCRIPTION FOR PROPOSED LEASE TO DYNAMIS ENERGY, LLC

PARCEL 1, WASTE TO ENERGY PLANT
A TRACT OF LAND BEING A PORTION OF HIDDEN HOLLOW SUBDIVISION AS RECORDED IN BOOK 53, PAGES 4782, 4783, 4784, 4786,4787, 4788, 4789 OF THE OFFICIAL RECORDS OF ADA COUNTY, IDAHO, LOCATED IN THE NORTHEAST QUARTER OF THE NORTHEAST QUARTER (NE1/4 NE1/4) OF SECTION 12, TOWNSHIP 4 NORTH, RANGE 1 EAST, BOISE MERIDIAN, AND GOVERNMENT LOT 1 OF SECTION 7 AND GOVERNMENT LOT 7 OF SECTION 6, TOWNSHIP 4 NORTH, RANGE 2 EAST, BOISE MERIDIAN, ADA COUNTY IDAHO, MORE PARTICULARLY DESCRIBED AS FOLLOWS:

COMMENCING AT THE NORTHWEST QUARTER OF SAID SECTION 7, BEING A FOUND 5/8 INCH REBAR WITH CAP, MARKED PLS 5461, FROM WHICH A FOUND 3-1/4 INCH BRASS CAP MONUMENT MARKING THE WEST QUARTER CORNER OF SAID SECTION 7 BEARS SOUTH 02°13'17" WEST (BASIS OF BEARING), 2611.35 FEET; THENCE ALONG THE NORTHERLY LINE OF SAID SECTION 7, SOUTH 89°42'00" EAST, 115.33 FEET TO THE POINT OF BEGINNING;

LEAVING SAID NORTHERLY LINE
THENCE NORTH 52 DEGREES 00 MINUTES 04 SECONDS EAST, A DISTANCE OF 87.51 FEET;
THENCE SOUTH 37 DEGREES 59 MINUTES 56 SECONDS EAST, A DISTANCE OF 368.50 FEET;
THENCE SOUTH 52 DEGREES 00 MINUTES 04 SECONDS WEST, A DISTANCE OF 946.00 FEET;
THENCE NORTH 37 DEGREES 59 MINUTES 56 SECONDS WEST, A DISTANCE OF 368.50 FEET;
THENCE NORTH 52 DEGREES 00 MINUTES 04 SECONDS EAST, A DISTANCE OF 858.49 FEET;
TO THE POINT OF BEGINNING.

CONTAINING 348,602 SQUARE FEET OR 8.00 ACRES MORE OR LESS.

PARCEL 2, SUBSTATION
A TRACT OF LAND BEING A PORTION OF HIDDEN HOLLOW SUBDIVISION AS RECORDED IN BOOK 53, PAGES 4782, 4783, 4784, 4786,4787, 4788, 4789 OF THE OFFICIAL RECORDS OF ADA COUNTY, IDAHO, LOCATED IN THE NORTHEAST QUARTER OF THE NORTHEAST QUARTER (NE1/4 NE1/4) OF SECTION 12, TOWNSHIP 4 NORTH, RANGE 1 EAST, BOISE MERIDIAN, ADA COUNTY IDAHO, MORE PARTICULARLY DESCRIBED AS FOLLOWS:

COMMENCING AT THE NORTHWEST QUARTER OF SAID SECTION 7, BEING A FOUND 5/8 INCH REBAR WITH CAP, MARKED PLS 5461, FROM WHICH A FOUND 3-1/4 INCH BRASS CAP MONUMENT MARKING THE WEST QUARTER CORNER OF SAID SECTION 7 BEARS SOUTH 02°13'17" WEST (BASIS OF BEARING), 2611.35 FEET; THENCE ALONG THE NORTHERLY LINE OF SAID SECTION 12, NORTH 89°27'29" WEST, 95.55 FEET; THENCE LEAVING SAID NORTHERLY LINE, SOUTH 52°00'04" WEST, 291.41 FEET TO THE POINT OF BEGINNING;

THENCE SOUTH 52 DEGREES 00 MINUTES 04 SECONDS WEST, A DISTANCE OF 200.00 FEET;
THENCE NORTH 37 DEGREES 59 MINUTES 56 SECONDS WEST, A DISTANCE OF 100.00 FEET;
THENCE NORTH 52 DEGREES 00 MINUTES 04 SECONDS EAST, A DISTANCE OF 200.00 FEET;
THENCE SOUTH 37 DEGREES 59 MINUTES 56 SECONDS EAST, A DISTANCE OF 100.00 FEET;
TO THE POINT OF BEGINNING.

CONTAINING 20,000 SQUARE FEET OR 0.46 ACRES MORE OR LESS.

0 20 40 80 120
SCALE: 1"=40'

PRELIMINARY NOT APPROVED FOR CONSTRUCTION

REVISIONS	
DATE:	MARCH 5, 2012
DESIGNED BY:	STAFF
DRAWN BY:	STAFF
REVIEWED BY:	
PROJECT:	
ISSUE:	

COPYRIGHT ALL DESIGNS, REPORTS, FIELD DATA, FIELD NOTES, DRAWINGS, SPECIFICATIONS, ESTIMATES, CALCULATIONS, ECONOMICS, OR ANY REPRESENTATION CONTAINED HEREON ARE THE SOLE PROPERTY OF DYNAMIS ENERGY, LLC UNLESS PREVIOUSLY EXPUNGED BY PRECEDENCE OR AGREEMENT

DYNAMIS ENERGY, LLC
ADA COUNTY LANDFILL WASTE TO ENERGY PLANT
PLAN SHEET
DIMENSIONING PLAN

DYNAMIS ENERGY

C4
SHEET 4 OF 7
V. 10 R. 2

path: C:\0-Scott\Dynamis Landfill\03_Design\ file name: WTE-DIMN.dwg | plot date: March 03, 2012 | plotted by: ssanders

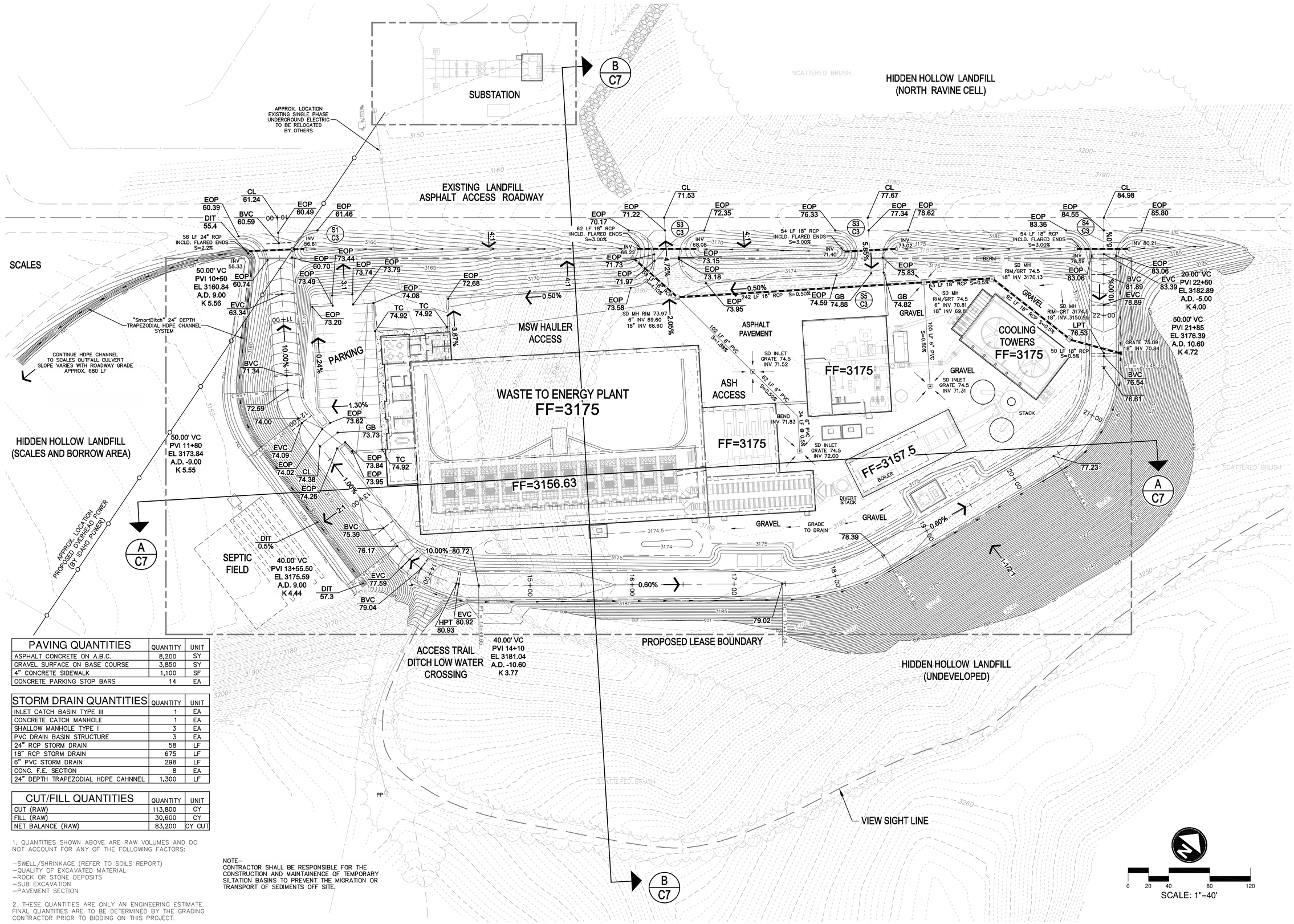

PAVING QUANTITIES	QUANTITY	UNIT
ASPHALT CONCRETE ON A.B.C.	8,200	SY
GRAVEL SURFACE ON BASE COURSE	3,850	SY
4" CONCRETE SIDEWALK	1,100	SF
CONCRETE PARKING STOP BARS	14	EA

STORM DRAIN QUANTITIES	QUANTITY	UNIT
INLET CATCH BASIN TYPE III	1	EA
CONCRETE CATCH MANHOLE	1	EA
SHALLOW MANHOLE TYPE I	3	EA
PVC DRAIN BASIN STRUCTURE	3	EA
24" RCP STORM DRAIN	58	LF
18" RCP STORM DRAIN	675	LF
6" PVC STORM DRAIN	298	LF
CONC. F.E. SECTION	8	EA
24" DEPTH TRAPEZODIAL HDPE CAHNNEL	1,300	LF

CUT/FILL QUANTITIES	QUANTITY	UNIT
CUT (RAW)	113,800	CY
FILL (RAW)	30,600	CY
NET BALANCE (RAW)	83,200	CY CUT

1. QUANTITIES SHOWN ABOVE ARE RAW VOLUMES AND DO NOT ACCOUNT FOR ANY OF THE FOLLOWING FACTORS:

–SWELL/SHRINKAGE (REFER TO SOILS REPORT)
–QUALITY OF EXCAVATED MATERIAL
–ROCK OR STONE DEPOSITS
–SUB EXCAVATION
–PAVEMENT SECTION

2. THESE QUANTITIES ARE ONLY AN ENGINEERING ESTIMATE. FINAL QUANTITIES ARE TO BE DETERMINED BY THE GRADING CONTRACTOR PRIOR TO BIDDING ON THIS PROJECT.

NOTE–
CONTRACTOR SHALL BE RESPONSIBLE FOR THE CONSTRUCTION AND MAINTAINENCE OF TEMPORARY SILTATION BASINS TO PREVENT THE MIGRATION OR TRANSPORT OF SEDIMENTS OFF SITE.

PRELIMINARY NOT APPROVED FOR CONSTRUCTION

REVISIONS

DATE: MARCH 5, 2012
DESIGNED BY: STAFF
DRAWN BY: STAFF
REVIEWED BY:
PROJECT:
ISSUE:

COPYRIGHT ALL DESIGNS, DRAWINGS, FIELD DATA, REPORTS, DRAWINGS, PROPOSALS, CALCULATIONS, ESTIMATES, OR ANY INFORMATION CONTAINED HEREON ARE THE SOLE PROPERTY OF DYNAMIS ENERGY, LLC UNLESS PREVIOUSLY EXCHANGED BY PRECEDENCE OR AGREEMENT

DYNAMIS ENERGY, LLC

HIDDEN HOLLOW LANDFILL WASTE TO ENERGY PLANT
PLAN SHEET

GRADING PLAN

DYNAMIS ENERGY

C5

SHEET 5 OF 7

V. 10 R._2

path: C:\0-Scott\Dynamis Landfill\03_Design\ file name: WTE-GRAD.dwg | plot date: March 03, 2012 | plotted by: ssanders

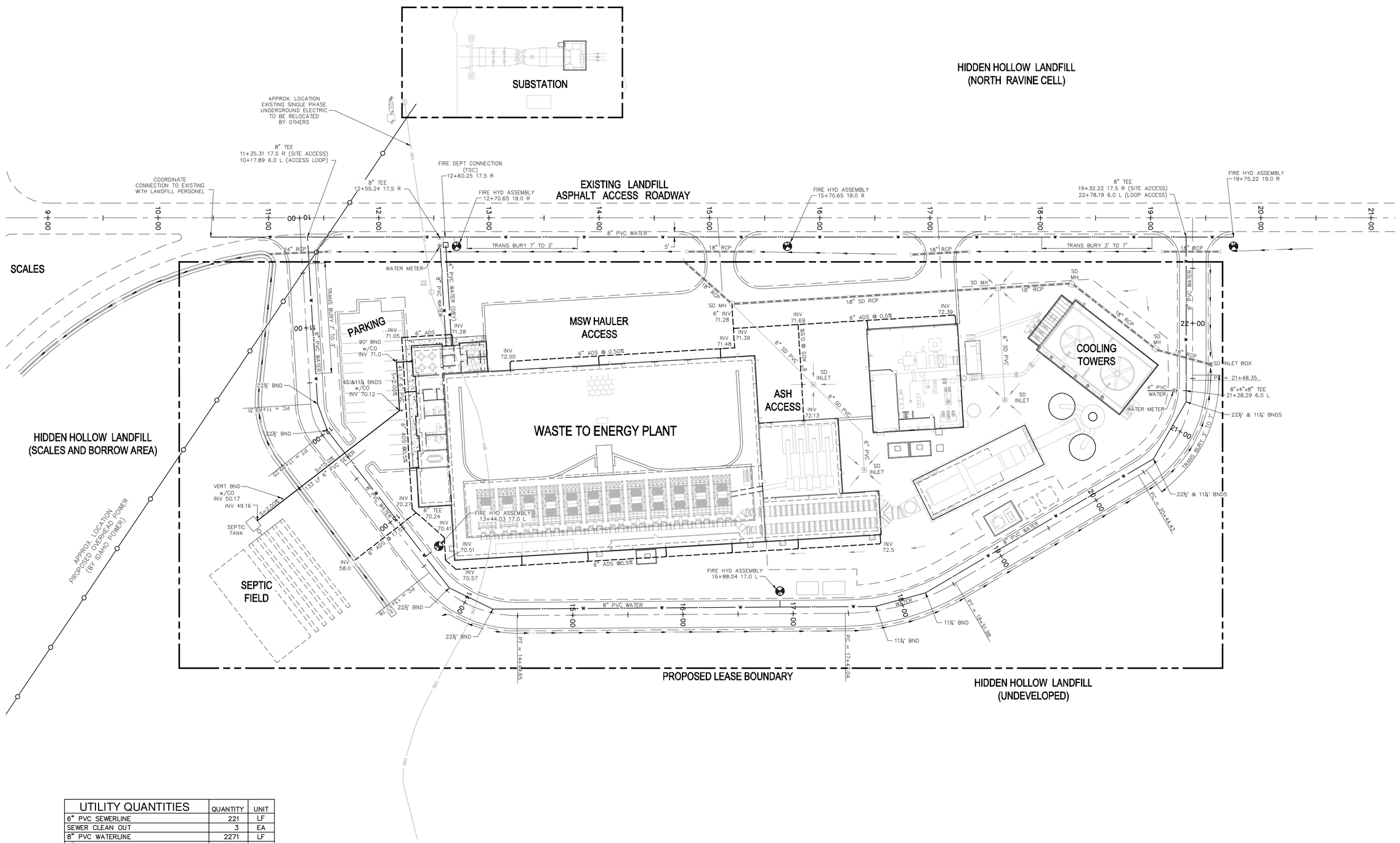

UTILITY QUANTITIES	QUANTITY	UNIT
6" PVC SEWERLINE	221	LF
SEWER CLEAN OUT	3	EA
8" PVC WATERLINE	2271	LF
4" PVC WATERLINE	135	LF
8" GATE VALVE	3	EA
4" GATE VALVE	1	EA
WATER METER	2	EA
FIRE HYDRANT ASSEMBLY	5	EA
FIRE DEPT CONNECTION (FDC)	1	EA
6" ADS ROOF DRAIN	1248	LF
ROOF DRAIN CONNECTION	14	EA

NOTE–COORDINATE ROOF DRAIN CONNECTIONS WITH ARCHITECTURAL PLAN FOR FINAL NUMBER & LOCATION

0 20 40 80 120
SCALE: 1"=40'

PRELIMINARY NOT APPROVED FOR CONSTRUCTION

REVISIONS

DATE: MARCH 5, 2012
DESIGNED BY: STAFF
DRAWN BY: STAFF
REVIEWED BY:
PROJECT:
ISSUE:

COPYRIGHT
ALL DESIGNS, REPORTS, FIELD DATA, FIELD NOTES, DRAWINGS, PROPOSALS, CALCULATIONS, ESTIMATES, OR ANY REPRESENTATION CONTAINED HEREON ARE THE SOLE PROPERTY OF DYNAMIS ENERGY, LLC UNLESS PREVIOUSLY EXCHANGED BY PRECEDENCE OR AGREEMENT

DYNAMIS ENERGY, LLC
ADA COUNTY LANDFILL WASTE TO ENERGY PLANT
PLAN SHEET

UTILITY PLAN

DYNAMIS ENERGY

C6

SHEET 6 OF 7

V. 10 R. 2

path: C:\0-Scott\Dynamis Landfill\03_Design\ file name: WTE-UTIL.dwg | plot date: March 03, 2012 | plotted by: ssanders

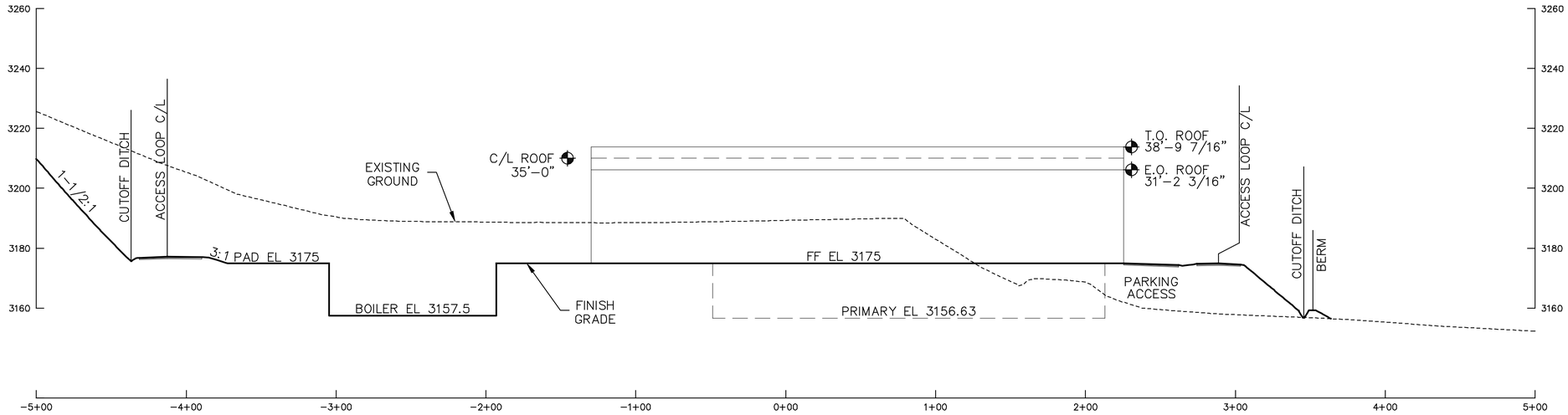

A C5 SITE CROSS SECTION (LOOKING SOUTHEAST)

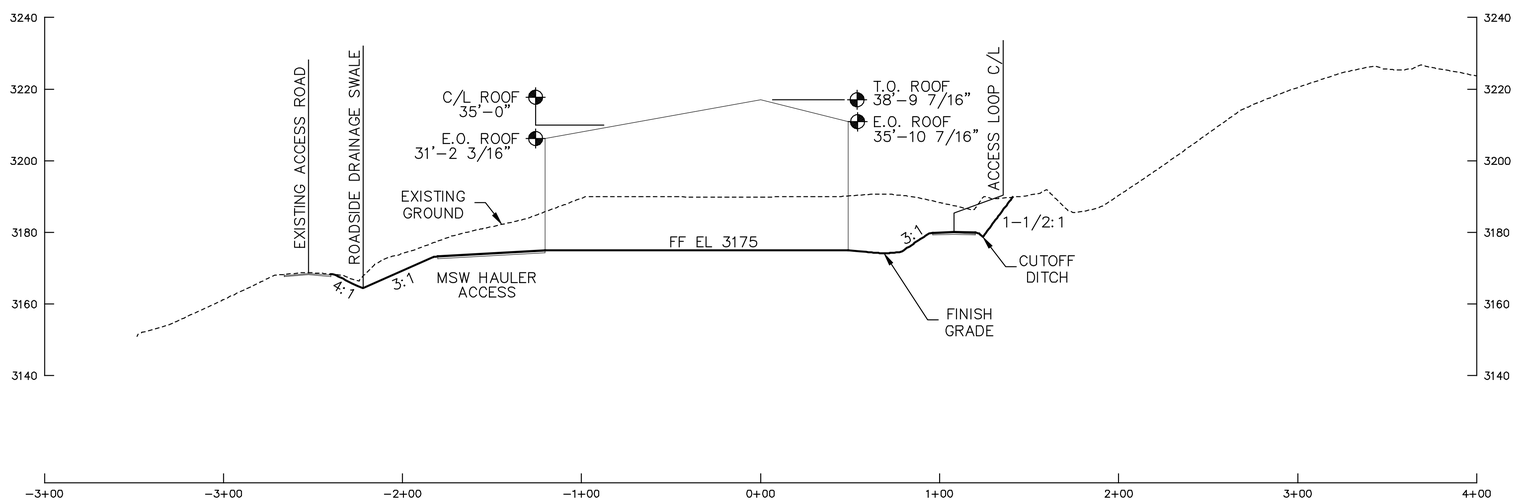

B C5 SITE CROSS SECTION (LOOKING NORTHEAST)

0 20 40 80 120
SCALE: 1"=40'
2X VERTICAL EXAGGERATION

PRELIMINARY NOT APPROVED FOR CONSTRUCTION

REVISIONS

DATE: MARCH 5, 2012
DESIGNED BY: STAFF
DRAWN BY: STAFF
REVIEWED BY:
PROJECT:
ISSUE:

COPYRIGHT ALL DESIGNS, REPORTS, FIELD DATA, FIELD NOTES, DRAWINGS, SPECIFICATIONS, CALCULATIONS, ESTIMATES, OR ANY REPRESENTATION CONTAINED HEREON ARE THE SOLE PROPERTY OF DYNAMIS ENERGY, LLC UNLESS PREVIOUSLY EXPUNGED BY PRECEDENCE OR AGREEMENT

DYNAMIS ENERGY, LLC
ADA COUNTY LANDFILL WASTE TO ENERGY PLANT
SECTION SHEET

SITE CROSS SECTIONS

DYNAMIS ENERGY

C7

SHEET 7 OF 7

V. 10 R. 2

path: C:\0-Scott\Dynamis Landfill\03_Design\ file name: WTE-SECT.dwg | plot date: March 03, 2012 | plotted by: ssanders

APPENDIX B

Public Notice of the Informational Meeting

Idaho Statesman

The Newspaper of the Treasure Valley
IDAHOSTATESMAN.COM

PO Box 40, Boise, ID 83707-0040

LEGAL PROOF OF PUBLICATION

Account #	Ad Number	Identification	PO	Amount	Cols	LInes
1067994	0000595649	LEGAL NOTICE	HiddenHollow	$30.20	1	19

Attention: Jill Simpson

DYNAMIS GROUP
776 E RIVERSIDE DR STE 150
EAGLE ID 83616

LEGAL NOTICE

Dynamis Energy, LLC Plans Public Informational Meeting

Dynamis Energy, LLC will, in accordance with the Department of Idaho Environmental Quality rules, hold an informational meeting on May 1, 2012 at the Oxford Suites Hotel located at1426 South Entertainment Avenue, Boise, ID 83709 at 1:30 p.m. (M.S.T). The purpose of the meeting will be to discuss the air quality related aspects of a proposed Waste-To-Energy facility to be located at the Hidden Hollow Landfill in Ada County, ID.

Pub. April 20, 2012

0000595649-01

JANICE HILDRETH, being duly sworn, deposes and says: That she is the Principal Clerk of The Idaho Statesman, a daily newspaper printed and published at Boise, Ada County, State of Idaho, and having a general circulation therein, and which said newspaper has been continuously and uninterruptedly published in said County during a period of twelve consecutive months prior to the first publication of the notice, a copy of which is attached hereto: that said notice was published in The Idaho Statesman, in conformity with Section 60-108, Idaho Code, as amended, for:

1 Insertions

Beginning issue of: 04/20/2012

Ending issue of: 04/20/2012

Janice Hildreth
(Legals Clerk)

STATE OF IDAHO)
.SS
COUNTY OF ADA)

On this 20 day of April in the year of 2012 before me, a Notary Public, personally appeared before me Janice Hildreth known or identified to me to be the person whose name subscribed to the within instrument, and being by first duly sworn, declared that the statements therein are true, and acknowledged to me that she executed the same.

Cecily Bring
Notary Public for Idaho
Residing at: Boise, Idaho

My Commission expires: 8-27-15

CECILY BRINGMAN NOTARY PUBLIC STATE OF IDAHO

APPENDIX C

DEQ PTC Forms and Checklists
Subpart Eb Applicability
Materials Separation Plan PTC Requirements

DEQ FORMS

IDEQ PTC Forms
Facility Wide Potential to Emit Emission Inventory

Table 1. POTENTIAL TO EMIT FOR NSR REGULATED POLLUTANTS

Emissions Unit	EU ID #	NSR Pollutant[a]							
		PM	PM-10	PM2.5	CO	Pb	NOx	VOC	SO2
		T/yr[b]	T/yr[b]	T/yr[b]	T/yr[b]	T/yr[b]	T/yr[b]	T/yr[b]	T/yr[b]
Point Sources									
Thermal Conversion Unit/Scrubber	**EU1/EU8**	11.47	11.47	11.47	31.83	8.99E-02	87.38	0.00	24.94
Primary Ignition System/Scrubbe	**EU2/EU8**	0.09	0.09	0.09	1.72	1.02E-05	2.04	0.11	0.00
Cooling Tower #1	**EU3**	0.04	0.04	0.04	n/a	n/a	n/a	n/a	n/a
Cooling Tower #2	**EU4**	0.04	0.04	0.04	n/a	n/a	n/a	n/a	n/a
Ash Handling System/Baghouse	**EU4/EU7**	1.97	1.97	1.97	n/a	n/a	n/a	n/a	n/a
Emergency Generato	**EU5**	0.01	0.01	0.01	0.07	0.00	0.33	0.30	0.25
Totals		**13.62**	**13.62**	**13.62**	**33.61**	**8.99E-02**	**89.75**	**0.41**	**25.19**

a) NSR Regulated air Pollutants are defined[1] as: Particulate Matter (PM, PM-10, PM-2.5), Carbon Monoxide, Lead, Nitrogen Dioxide, Ozone (VOC), Sulfur Dioxide, all pollutants regulated by NSPS (40 CFR 60)(i.e. TRS, fluoride, sulfuric acid mist) & Class I & Class II Ozone Depleting Substances (40 CFR 82)(i.e. CFC, HCFC, Halon, etc.) The Dynamis facility is not a source of any pollutants regualted by NSPS other than NSR regulated air pollutants, nor is the facility a source of Class I or Class II Ozone Depleting Substances

b)Ton per year emissions based on 8760 hours/year operation.

** See spreadsheets prepared by JBR (included in Appendix F of the permit application for further information regarding emission factors and calculation assumptions).

IDEQ PTC Forms
Ambient Impact Assessment Emission Inventory
for New Minor Facilities and Minor Modifications

Table 2 Proposed Emissions

Emissions Unit	Stack or Emissions Point ID[a]	PM_{10}	$PM_{2.5}$		SO_2		NO_x		CO		Lead	
		lb/hr 24-hr Avg.	lb/hr 24-hr Avg.	lb/hr Annual Avg.	lb/hr Max.	lb/hr Annual Avg.	lb/hr Max.	lb/hr Annual Avg.	lb/hr Max.	lb/hr 8-hr Avg.	lb/hr monthly Avg.	lb/hr 1/4ly Avg.
Point Sources												
Thermal Conversion Unit (Peak Operation)	UNITPEAK	3.657	3.657	3.657	8.542	2.925	29.925	29.925	10.901	10.901	0.031	0.031
Thermal Conversion Unit (OffPeak Operation)	UNIT1OP	0.539	0.539	0.539	1.259	0.862	4.410	4.410	1.607	1.607	0.005	0.005
Cooling Tower #1	CT1	0.009	0.039	0.009	n/a	n/a	n/a	n/a	n/a	n/a	n/a	n/a
Cooling Tower #2	CT2	0.009	0.039	0.009	n/a	n/a	n/a	n/a	n/a	n/a	n/a	n/a
Ash Handling System/Baghouse	ASHBH	0.450	0.450	0.450	n/a	n/a	n/a	n/a	n/a	n/a	0.001	0.001
Emergency Generator	EMERGEN	0.035	0.035	0.035	0.984	0.984	1.302	1.302	0.264	0.026	n/a	n/a
Primary Ignition System	UNITPEAK/UNIT1OP	0.021	0.021	0.021	0.001	0.001	0.466	0.466	0.392	0.392	2.33E-06	2.33E-06

a) Stack or Emissions Point ID must match the ID used in the air dispersion model.

IDEQ PTC Forms
Toxic Air Pollutant Emissions Inventory

Table 1. PRE- AND POST PROJECT NON-CARCINOGENIC TAP EMISSIONS SUMMARY POTENTIAL TO EMIT

Non-Carcinogenic Toxic Air Pollutants (sum of all emissions)	Pre-Project 24-hour Average Emissions Rates for Units at the Facility (lb/hr)	Post Project 24-hour Average Emissions Rates for Units at the Facility (lb/hr)	Change in 24-hour Average Emissions Rates for Units at the Facility (lb/hr)	Non-Carcinogenic Screening Emission Level (lb/hr)	Exceeds Screening Level? (Y/N)
Acrolein	0.00E+00	1.13E-04	1.13E-04	1.70E-02	No
Aluminum	0.00E+00	1.08E-01	1.08E-01	6.67E-01	No
Antimony	0.00E+00	1.13E-03	1.13E-03	3.30E-02	No
Barium	0.00E+00	8.88E-04	8.88E-04	3.30E-02	No
Chromium	0.00E+00	2.62E-03	2.62E-03	3.30E-02	No
Cobalt	0.00E+00	1.84E-03	1.84E-03	3.30E-03	No
Copper	0.00E+00	1.44E-03	1.44E-03	6.70E-02	No
Ethylbenzene	0.00E+00	0.00E+00	0.00E+00	2.90E+01	No
Fluoride (as F) (Hydrogen Fl)	0.00E+00	8.83E+00	8.83E+00	1.67E-01	Yes
Fluorene	0.00E+00	0.00E+00	0.00E+00	1.67E-01	No
Hexane	0.00E+00	8.40E-03	8.40E-03	1.20E+01	No
Hydrogen Chloride	0.00E+00	1.19E+00	1.19E+00	5.00E-02	Yes
Manganese	0.00E+00	9.60E-03	9.60E-03	3.33E-01	No
Mercury	0.00E+00	2.22E-03	2.22E-03	3.00E-03	No
Molybdenum	0.00E+00	3.21E-03	3.21E-03	3.33E-01	No
Naphthalene*	0.00E+00	3.04E-06	3.04E-06	9.10E-05	No
Pentane	0.00E+00	1.21E-02	1.21E-02	1.18E+02	No
Phosphorous	0.00E+00	2.66E-03	2.66E-03	7.00E-03	No
Selenium	0.00E+00	3.18E-03	3.18E-03	1.30E-02	No
Silver	0.00E+00	2.92E-07	2.92E-07	7.00E-03	No
Toluene	0.00E+00	5.15E-04	5.15E-04	2.50E+01	No
o-Xylene	0.00E+00	3.48E-04	3.48E-04	2.90E+01	No
Zinc	0.00E+00	3.91E-01	3.91E-01	6.67E-01	No

** See spreadsheets prepared by JBR (included in Appendix F of the permit application for further information regarding emission factors and calculation assumptions.

Table 2. PRE- AND POST PROJECT CARCINOGENIC TAP EMISSIONS SUMMARY POTENTIAL TO EMIT

Carcinogenic Toxic Air Pollutants (sum of all emissions)	Pre-Project Annual Average Emissions Rates for Units at the Facility (lb/hr)	Post Project Annual Average Emissions Rates for Units at the Facility (lb/hr)	Change in Annual Average Emissions Rates for Units at the Facility (lb/hr)	Carcinogenic Screening Emission Level (lb/hr)	Exceeds Screening Level? (Y/N)
Acetaldehyde	0.00E+00	9.37E-04	9.37E-04	3.00E-03	No
Arsenic	0.00E+00	9.33E-07	9.33E-07	1.50E-06	No
Benzene	0.00E+00	1.15E-03	1.15E-03	8.00E-04	Yes
Beryllium	0.00E+00	5.60E-08	5.60E-08	2.80E-05	No
Cadmium	0.00E+00	4.98E-03	4.98E-03	3.70E-06	Yes
Chromium VI	0.00E+00	0.00E+00	0.00E+00	5.60E-07	No
Dioxin/Furan	0.00E+00	1.21E-06	1.21E-06	1.50E-10	Yes
Formaldehyde	0.00E+00	1.79E-03	1.79E-03	5.10E-04	Yes
Nickel	0.00E+00	2.17E-02	2.17E-02	2.70E-05	Yes
Benzo(a)pyrene	0.00E+00	5.60E-09	5.60E-09	2.00E-06	No
Benz(a)anthracene	0.00E+00	8.40E-09	8.40E-09	2.00E-06	No
Benzo(b)fluoranthene	0.00E+00	8.40E-09	8.40E-09	2.00E-06	No
Benzo(k)fluoranthene	0.00E+00	8.40E-09	8.40E-09	2.00E-06	No
Chrysene	0.00E+00	8.40E-09	8.40E-09	2.00E-06	No
Dibenzo(a,h)anthracene	0.00E+00	5.60E-09	5.60E-09	2.00E-06	No
Indeno(1,2,3-cd)pyrene	0.00E+00	8.40E-09	8.40E-09	2.00E-06	No
Total PAHs	0.00E+00	2.45E-07	2.45E-07	9.10E-05	No

a) PAH is considered as one TAP comprised of: benzo(a)anthracene, benzo(b)fluoranthene, benzo(k)fluoranthene, dibenzo(a,h)anthracene, chrysene, indeno(1,2,3-cd)pyrene, benzo(a)pyrene. The total is compared to benzo(a)pyrene.

** See spreadsheets prepared by JBR (included in Appendix F of the permit application for further information regarding emission factors and calculation assumptions.

IDEQ PTC Forms
Facility Wide Hazardous Air Pollutant Potential to Emit

Table 1 HAP POTENTIAL TO EMIT EMISSIONS SUMMARY

HAP Pollutants	PTE (T/yr)
Acrolein	4.95E-04
Antimony	4.94E-03
Chromium	1.15E-02
Cobalt	8.05E-03
Ethylbenzene	0.00E+00
Fluoride (as F) (Hydrogen Fl)*	3.87E+01
Hexane	3.68E-02
Hydrogen Chloride	5.21E+00
Manganese	4.20E-02
Mercury	9.72E-03
Naphthalene	1.33E-05
Phosphorous	1.17E-02
Selenium	1.39E-02
Toluene	2.26E-03
o-Xylene	1.52E-03
Acetaldehyde	4.10E-03
Arsenic	4.09E-06
Benzene	5.04E-03
Beryllium	2.45E-07
Cadmium	2.18E-02
Chromium VI	0.00E+00
Dioxin/Furan	5.32E-06
Formaldehyde	7.85E-03
Nickel	9.49E-02
Total	5.43E+00

* Maximum Individual HAP

** See spreadsheets prepared by JBR (included in Appendix F of the permit application for further information regarding emission factors and calculation assumptions.

Department of Environmental Quality
1410 N. Hilton, Boise, ID 83706
For assistance, call the
Air Permit Hotline - 1-877-5PERMIT

15- Day Pre-Permit Construction Approval Application Completeness Checklist

This checklist is designed to aid the applicant in submitting a complete pre-permit construction approval application. This checklist should be completed and submitted with the pre-permit construction approval application.

I. Actions Needed Before Submitting Application

☒ Refer to the Rule. Read the Pre-Permit Construction requirements contained in IDAPA 58.01.01.213, Rules for the Control of Air Pollution in Idaho.

☒ Refer to DEQ's Pre-Permit Construction Approval Guidance Document. DEQ has developed a guidance document to aid applicants in submitting a complete pre-permit construction approval application. The guidance document is located on DEQ's website (go to http://www.deq.idaho.gov/air/permits_forms/permitting/ptc_prepermit_guidance.pdf

☒ Consult with DEQ Representatives. Schedule a pre-application meeting with DEQ to discuss application requirements before submitting the pre-permit construction approval application. Schedule the meeting by contacting the DEQ Air Permit Hotline at **877-5PERMIT**. The meeting can be in person or on the phone. Refer to IDAPA 58.01.01.213.01b.

☒ Schedule Informational Meeting. Schedule an informational meeting before submitting the pre-permit construction approval application for the purposes of satisfying IDAPA 58.01.01.213.02.a. The purpose for the informational meeting is to provide information about the proposed project to the general public. Refer to IDAPA 58.01.01.213.01.c.

☒ Submit Ambient Air Quality Modeling Protocol. It is required that an ambient air quality modeling protocol be submitted to DEQ at least two (2) weeks before the pre-permit construction approval application is submitted. Contact DEQ's Air Quality Hotline at **877-5PERMIT** for information about the protocol.

☒ Written DEQ Approved Protocol. Written DEQ approval of the modeling protocol must be received before the pre-permit construction approval application is submitted. Refer to IDAPA 58.01.01.213.01.c.

II. Application Content

Application content should be prepared using the checklist below. The checklist is based on the requirements contained in IDAPA 58.01.01.213 and DEQ's Pre-Permit Construction Approval Guidance Document.

☒ Pre-Permit Construction Eligibility and Proof of Eligibility. Pre-permit construction approval is not available for any new Prevention of Significant Deterioration (PSD) major source, any proposed PSD major modification, or any proposed major NSR project in a non-attainment area. Emissions netting and emissions offsets are not allowed to be used. A certified proof of pre-permit construction eligibility must be submitted with the pre-permit construction approval application. Refer to IDAPA 58.01.01.213.01.

☒ Request to Construct Before Obtaining a Permit to Construct. A letter requesting the ability to construct before obtaining the required permit to construct must be submitted with the pre-permit construction approval application. Refer to IDAPA 58.01.01.213.01.c.

☒ Apply for a Permit to Construct. Submit a Permit to Construct application using forms available on DEQ's website at http://www.deq.idaho.gov. Refer to IDAPA 58.01.01.213.01.a.

☒ Permit to Construct Application Fee. The permit to construct application fee of $1000 must be submitted at the time the original pre-permit construction approval application is submitted. Refer to IDAPA 58.01.01.224. If the pre-permit construction approval is denied and a new application is submitted, a new $1,000 application fee will be required to be submitted. The application fee is not transferable or refundable. The application fee can be paid by check, credit card or Electronic Funds Transfer (EFT). If you choose to pay by credit card or EFT, please refer to the following Access Idaho link:
https://www.accessidaho.org/secure/deq/payport/item.html?id=511
If you choose to pay by check, enclose the check with your pre-permit construction approval application.

☒ Notice of Informational Meeting. Within 10 days after the submittal of the pre-permit construction approval application, an informational meeting must be held in at least one location in the region where the stationary source will be located. The information meeting must be made known by notice published at least 10 days before the informational meeting in a newspaper of general circulation in the county in which the stationary source will be located. A copy of this notice, as published, must be submitted with the pre-permit construction approval application. Refer to IDAPA 58.01.01.213.02.a. Additional information regarding the informational meeting is included in DEQ's Pre-Permit Construction Approval Guidance Document. (go to http://www.deq.idaho.gov/air/permits_forms/permitting/ptc_prepermit_guidance.pdf)

☒ Process Description(s). The process or processes for which pre-permit construction approval is requested must be described in sufficient detail and clarity such that a member of the general public not familiar with air quality can clearly understand the proposed project. A process flow diagram is required for each process for which pre-permit construction approval is requested. Refer to IDAPA 58.01.01.213.01.c.

☒ Equipment List. All equipment that will be used for which pre-permit construction approval is requested must be described in detail. Such description includes, but is not limited to, manufacturer, model number or other descriptor, serial number, maximum process rate, proposed process rate, maximum heat input capacity, stack height, stack diameter, stack gas flowrate, stack gas temperature, etc. All equipment that will be used for which pre-permit construction approval is requested must be clearly labeled on the process flow diagram. Refer to IDAPA 58.01.01.213.01.c.

☒ Scaled Plot Plan. It is required a scaled plot plan be included in the permit to construct application and it must clearly label the location of each proposed process and the equipment that will be used in the process.

☒ Proposed Emissions Limits and Modeled Ambient Concentration for All Regulated Air Pollutants. All proposed emission limits and modeled ambient concentrations for all regulated air pollutants must demonstrate compliance with all applicable air quality rules and regulations. Regulated air pollutants include criteria air pollutants (PM_{10}, SO_x, NO_2, O_3, CO, lead), toxic air pollutants listed pursuant to IDAPA 58.01.01.585 and 586, and hazardous air pollutants listed pursuant to Section 112 of the 1990 Clean Air Act Amendments (go to http://www.epa.gov/ttn/atw/188polls.html). Describe in detail how the proposed emissions limits and modeled ambient concentrations demonstrate compliance with each applicable air quality rule and regulation. It is requested that emissions calculations, assumptions, and documentation be submitted with sufficient detail so DEQ can verify the validity of the emissions estimates. Refer to IDAPA 58.01.01.213.01.c.

☒ Restrictions on a Source's Potential to Emit. Any proposed restriction on a source's potential to emit such that permitted emissions will be either below major source levels or below a significant increase must be described in detail in the pre-permit construction approval application. Refer to IDAPA 58.01.01.213.01.d.

☒ List all Applicable Air Quality Rules and Regulations. All applicable rules and regulations must be cited by the rule or regulation section/subpart that applies for each emissions unit. Refer to IDAPA 58.01.01.213.01.c.

☒ Certification of Pre-Permit Construction Approval Application. The pre-permit construction approval application must be signed by the Responsible Official and must contain a certification signed by the Responsible Official. The certification must state that, based on information and belief formed after reasonable inquiry, the statements and information in the document are true, accurate, and complete. Refer to IDAPA 58.01.01.213.01.d and IDAPA 58.01.01.123.

☒ Submit the Pre-Construction Approval Application. Submit the pre-permit construction approval application and application fee to the following address:

Department of Environmental Quality
Air Quality Division
Stationary Source Program
1410 North Hilton
Boise, ID 83706-1255

Department of Environmental Quality
1410 N. Hilton, Boise, ID 83706
For assistance, call the
Air Permit Hotline - 1-877-5PERMIT

Department of Environmental Quality - Air Quality Division
Minor Source Permit to Construct Application Completeness Checklist

This checklist is designed to aid the applicant in submitting a complete permit to construct application.

I. Actions Recommended Before Submitting Application

☒ Refer to the Rule. Read the Permit to Construct requirements contained in IDAPA 58.01.01.200-228, Rules for the Control of Air Pollution in Idaho. The Rules are available on DEQ's website (go to http://adm.idaho.gov/adminrules/rules/idapa58/0101.pdf).

☒ Refer to DEQ's Permit to Construct Guidance Document. DEQ has developed a guidance document to aid applicants in submitting a complete permit to construction application. The guidance document is located on DEQ's website (go to http://www.deq.idaho.gov/air/permits_forms/permitting/ptc_prepermit_guidance.pdf).

☒ Consult with DEQ Representatives. It is recommended that the applicant schedule a pre-application meeting with DEQ to discuss application requirements before submitting the permit to construct application. The meeting can be in person or on the phone. Contact DEQ's Air Quality Hotline at **877-5PERMIT** to schedule the pre-application meeting.

☒ Submit Ambient Air Quality Modeling Protocol. It is strongly recommended that an ambient air quality modeling protocol be submitted to DEQ at least two (2) weeks before the permit to construct application is submitted. Contact DEQ's Air Quality Hotline at **877-5PERMIT** for information about the protocol.

II. Application Content

Application content should be prepared using the checklist below. The checklist is based on the requirements contained in IDAPA 58.01.01.202.

☒ Apply for a Permit to Construct. Submit a Permit to Construct application using forms available on DEQ's website at http://www.deq.idaho.gov/air/permits_forms/forms/ptc_general_application.pdf.

☒ Permit to Construct Application Fee. The permit to construct application fee of $1000 must be submitted at the time the original permit to construct application is submitted. Refer to IDAPA 58.01.01.224. If the permit to construct application is withdrawn or denied and a new application is submitted, a new $1,000 application fee is required to be submitted. The application fee is not transferable or refundable. The application fee can be paid by check, credit card or Electronic Funds Transfer (EFT). If you choose to pay by credit card or EFT, please refer to the following Access Idaho link:
https://www.accessidaho.org/secure/deq/payport/item.html?id=511
If you choose to pay by check, enclose the check with your permit to construct application.

☒ Process Description(s). The process or processes for which construction is requested must be described in sufficient detail and clarity such that a member of the general public not familiar with air quality can clearly understand the proposed project. A process flow diagram is required for each process.

☒ Equipment List. All equipment that will be used for which construction is requested must be described in detail. Such description includes, but is not limited to, manufacturer, model number or other descriptor, serial number, maximum process rate, proposed process rate, maximum heat input capacity, stack height, stack diameter, stack gas flowrate, stack gas temperature, etc. All equipment that will be used for which construction is requested must be clearly labeled on the process flow diagram.

☒ Potential to Emit. Submit the uncontrolled potential to emit (pre-control equipment emissions estimates) and the controlled potential to emit (post-control equipment emissions estimates) for all equipment for which construction is requested. Any limit on the equipment for which is construction is requested may become a

limit on that equipment in the permit to construct.

☒ Potential to Emit and Modeled Ambient Concentration for All Regulated Air Pollutants. All proposed emission limits and modeled ambient concentrations for all regulated air pollutants must demonstrate compliance with all applicable air quality rules and regulations. Regulated air pollutants include criteria air pollutants, toxic air pollutants listed pursuant to IDAPA 58.01.01.585 and 586, and hazardous air pollutants listed pursuant to Section 112 of the 1990 Clean Air Act Amendments (go to http://www.epa.gov/ttn/atw/188polls.html). Describe in detail how the proposed emissions limits and modeled ambient concentrations demonstrate compliance with each applicable air quality rule and regulation. It is requested that emissions calculations, assumptions, and documentation be submitted with sufficient detail so DEQ can verify the validity of the emissions estimates.

☒ Scaled Plot Plan. It is required a scaled plot plan be included in the permit to construct application and it must clearly label the location of each proposed process and the equipment that will be used in the process.

☒ List all Applicable Requirements. All applicable requirements must be cited by the rule or regulation section/subpart that applies for each emissions unit.

☒ Certification of Permit to Construct Application. The permit to construct application must be signed by the Responsible Official and must contain a certification signed by the Responsible Official. The certification must state that, based on information and belief formed after reasonable inquiry, the statements and information in the document are true, accurate, and complete. Refer to IDAPA 58.01.01.123.

☒ Submit the Permit to Construct Application. Submit the permit to construct application and application fee to the following address:

Air Quality Program Office – Application Processing
Department of Environmental Quality
1410 N. Hilton
Boise, ID 83706-1255

Department of Environmental Quality - Air Quality Division

Toxic Air Pollutant (TAP) Preconstruction Compliance Application Completeness Checklist

This checklist is designed to aid the applicant in submitting a complete preconstruction compliance demonstration for toxic air pollutants (TAPs) in permit to construct applications. The applicant must place a check mark in the box for each section below that applies.

I. Actions Needed Before Submitting Application

☒ Refer to the Rule. Read the Demonstration of Preconstruction Compliance with Toxic Standards contained in IDAPA 58.01.01.210 (Rules Section 210) Rules for the Control of Air Pollution in Idaho (Rules). Toxic air pollutants (TAPs) are regulated in accordance with Rules Section 210 only from emission units constructed or modified on or after July 1, 1995.

Determine if a new (constructed after June 30, 1995) emission unit has the potential to emit a TAP listed in IDAPA 58.01.01.585 (Rules Section 585) or IDAPA 58.0101.586 (Rules Section 586). Potential toxic air pollutants can be determined by reviewing commonly available emission factors, such as EPA's AP-42, or calculating emissions using a mass balance. For TAPs that are emitted but not listed in Rules Section 585 and 586, contact the Air Permit Hotline at 877-5PERMIT.

Determine if the proposed construction or modification is exempt from the need to obtain a permit to construct in accordance with IDAPA 58.01.01.220-223. Use the Exemption Criteria and Reporting Requirements for TAPs IDAPA 58.01.01.223 checklist to assist you in the exemption determination. If the source does not qualify for an exemption in accordance with IDAPA 58.01.01.220-223 complete the following checklist and submit it with the permit application. Please note that fugitive TAP emissions are not included in the IDAPA 58.01.01.223 exemption determination, but fugitive TAP emissions are included in the analysis if a permit is required. Stated another way: if a source is required to obtain a Permit to Construct because it does not meet the exemption criteria for any reason all TAP emissions, including fugitive TAPs, are included in the compliance demonstration in the application for the permit to construct. Should you have any questions regarding the fact that all TAPs, including fugitive TAPs, are included in the TAP preconstruction compliance demonstration submitted with a permit to construct application you may call the Air Permit Hotline at 877-5PERMIT.

Will the new or modified source result in new or increased potential emissions of TAPs?

☒ Yes. If yes, continue to section II.

☐ No. If no, no further action is required.

II. Application Content

If a new source has the potential to emit a TAP, or if a modification to an existing source increases the potential to emit of a TAP, then one of the following methods (A-J) of demonstrating TAP preconstruction compliance must be documented for each TAP. Standard methods are one of A-C. The applicant may also use one of the specialized methods in D-J. Fugitive TAP emissions shall be included in the analysis. The compliance methods are based on the requirements of Rules Section 210. Applicants are often able to demonstrate preconstruction TAP compliance using a combination of methods A and B.

Emission Calculations

Emissions calculation methodologies used are dependent on whether a specific TAP is a non-carcinogen or a carcinogen and whether the compliance method chosen from the list below calls

for controlled or uncontrolled emissions. Non-carcinogens are regulated based on a 24-hour averaging period and emission rates used for comparison to the non-carcinogen screening emissions level (EL) should be the maximum controlled or uncontrolled emissions quantity during any 24-hour period divided by 24. Carcinogens are regulated as a long term increment and emission rates used for comparison to the carcinogen EL should be the maximum controlled or uncontrolled emissions quantity during any 1 year period divided by 8760.

Modeling Analyses

Atmospheric dispersion modeling is required when controlled TAP emissions rates exceed ELs. Modeling analyses should be conducted in accordance with IDAPA 58.01.01.210.03. Quantification of Ambient Concentrations and the State of Idaho Air Quality Modeling Guideline (http;//www.deq.idaho.gov/air/data_reports/publications.cfm#model). For non-carcinogen 24-hour increments, compliance is demonstrated using the maximum modeled 24-hour-averaged concentration from available meteorological data (typically a five-year data set). For carcinogen long-term increments, compliance is demonstrated using the maximum modeled average concentration for the duration of the data set (one-year to five-year data set).

A submitted modeling report should clearly specify modeled emissions rates and results. All electronic model input files should be submitted, including BPIP input files.

Poly aromatic Hydrocarbons

Questions often arise regarding polyaromatic hydrocarbons as they are listed in Rules Section 586 of the Rules. The following two points are provided for clarification.

1) The following group of 7 PAH's (i.e. named POM), shall be combined and considered as one TAP equivalent in potency to benzo(a)pryrene:

   Benzo(a)anthracene, benzo(b)fluoranthene, benzo(k)fluoranthene, dibenzo(a, h) anthrancene, chrysene, indeno(1,2,3,-cd) pyrene, benzo (a) pyrene

2) All other PAH's are considered as a single pollutant and the emission of each is compared the PAH increment listed in Rules Section 586.

Compliance Methods

Fill in letter(s) (A-J) from the list below for TAP compliance demonstration method(s) used: _____.

A. TAPs Compliance Using Uncontrolled Emissions (Rules Section 210.05)

☐ Calculate the uncontrolled emissions (Rules Section 210.05) of each TAP from new emissions units. Uncontrolled emission rates are emissions at maximum capacity without the effect of physical or operational limitations. See Quantification of Emission Rates (Rules Section 210.02). Show calculations and state all assumptions.

☐ Calculate the increase of TAP emissions from modified emissions units. Show calculations and state all assumptions. The increase in emissions for a modified emission unit is determined by subtracting the potential to emit the TAP before the modification from the uncontrolled potential to emit after the modification. In conducting this analysis please note the following for TAP emission rate increase determinations:

Uncontrolled emission rates after the modification are emissions at maximum capacity without the effect of physical or operational limitations.

When determining the emissions increase from existing permitted emissions units the emission rate before the modification is equivalent to the emission limits contained in the permit for the

TAPs or, if there no emission limits in the permit, by determining what the emission rate is under the physical or operational limitations contained in the permit.

☐ Aggregate the uncontrolled emissions for each TAP from all new emissions units with the increase in emissions from all modified emissions units.

☐ If the aggregated emissions increase for each TAP from the new and modified units, as determined above, are less than or equal to the respective TAP screening emissions level (EL) then preconstruction compliance with toxic standards has been demonstrated and no further analysis is required. Submit a table comparing the uncontrolled emissions rate to the applicable EL.

If aggregated emissions are greater than the respective screening emissions level (EL) for any pollutants, use another compliance demonstration method for those pollutants, such as methods B, C, or D.

B. TAP Compliance Using Uncontrolled Ambient Concentration (Rules Section 210.06)

☐ Determine the uncontrolled emissions of each TAP from new emission units and the increase in emissions from all modified emissions units as described above in compliance Method A. Show calculations and state all assumptions.

☐ Model the uncontrolled emissions of each TAP from new emissions units and the increase in emissions from all modified emissions units.

☐ If the uncontrolled ambient concentration is less than or equal to the acceptable ambient concentration increment listed in Rules Section 585 and 586 no further procedures for demonstrating preconstruction compliance will be required for that TAP as part of the application process. Submit a table comparing uncontrolled ambient concentrations to the applicable acceptable ambient concentration.

C. TAP Compliance Using Controlled Ambient Concentrations (Rules Section 210.08)

☒ Determine the controlled emissions from new emissions units and the controlled emission increase from modified emissions units. Show all calculations and state all assumptions, including the control methods.

☒ Model the controlled emissions of each TAP from new emissions units and the increase in controlled emissions from all modified emissions units.

TAP emissions levels (EL) included in Rules Section 585 and 586 are derived based on generic modeling. If the sum the of emissions from new and modified sources is below the EL compliance is demonstrated without the need to conduct site-specific dispersion modeling.

☒ If the controlled ambient concentration from emission increases from new emissions units and modified emissions units is less than the applicable acceptable ambient concentration no further procedures for demonstrating preconstruction compliance are required.

☒ The Department shall include an emission limit for the TAP in the permit to construct that is equal to or, if requested by the applicant, less than the emission rate that was used in the modeling (Rules Section 210.08.c).

In some instances the Department may consider a throughput limit or other inherently-limiting operational restriction in a permit as an effective emission limit for the TAP, rather than including a specific emission rate limit.. Note that the applicant may model uncontrolled emissions as described in compliance Method B in an attempt to avoid TAPs emissions limitations.

D. TAPs Compliance for NSPS and NESHAP Sources (Rules Section 210.20)

☒ If the owner or operator demonstrates that the TAP emissions from the source or modification is regulated by 40 CFR Part 60, 40 CFR Part 61 or 40 CFR Part 63, no further procedures for demonstrating preconstruction compliance will be required for that TAP.

The Dynamis facility will be regulated under 40 CFR Part 60, Subpart Eb. Cadmium, dioxin and furan, hydrochloric acid and mercury emissions are regulated under Subpart Eb, therefore compliance with these TAPs is not required to be demonstrated.

☒ Provide a demonstration that the TAP is regulated under 40 CFR Part 60, 40 CFR Part 61 or 40 CFR Part 63. This demonstration must be specific for each TAP emitted.

E. TAP Compliance Using Net Emissions (Rules Section 210.09)

An applicant may use TAP net emissions to show preconstruction compliance; however this analysis may require more work than some of the others procedures available to demonstrate preconstruction compliance. When netting, all emissions increases and decreases of the TAP that have occurred within five years must be included in the analysis as described below.

☐ Determine the net emission increase for a TAP. A net emissions increase shall be an emission increase from a particular modification plus any other increase and decreases in actual emissions at the facility that are creditable and contemporaneous with particular modification (Rules Section 210.09). Show all calculations and state all assumptions.

☐ A creditable increase or decrease in actual emissions is contemporaneous with a particular modification if it occurs within five (5) years of the commencement of the construction or modification (Rules Section 210.09.a).

Actual emissions are (Rules Section 006.03):

- ☐ In general, actual emissions as of a particular date shall equal the average rate, in tons per year, at which the unit actually emitted the pollutant during a two year period which precedes the particular date and which is representative of normal source operation. The Department shall allow the use of a different time period upon a determination that it is more representative of normal source operation. Actual emissions shall be calculated using the unit's actual operating hours, productions rates, and types of materials processed, stored, or combusted during the selected time period.
- ☐ The Department may presume that the source-specific allowable emissions for the unit are equivalent to actual emissions of the unit.
- ☐ For any emission unit (except electric utility steam generating units) that has not begun normal operations on the particular date, actual emissions shall equal the potential to emit of the unit on that date.

☐ Do not include emissions increases from emission units that have an uncontrolled emission rate that is 10% or less than the applicable screening emission level (EL) in Rules Section 585 and 586 (Rules Section 007.09.c.ii) and do not include emission increases from environmental remediation sources (Rules Section 007.09.c.iii). Show all calculations and state all assumptions.

☐ If the net emission increase is less than or equal to the applicable screening emissions level (EL) listed in Rules Section 585 and 586, no further procedures for demonstrating preconstruction compliance will be required (Rules Section 210.09.c).

☐ The Department shall include emission limits and other permit terms for the TAP in the permit to construct that will assure that the facility will be operated in the manner described in the preconstruction compliance demonstration (Rules Section 210.09.d).

In some instances the Department may consider a throughput limit or other inherently-limiting operational restriction in a permit as an effective emission limit for the TAP. rather than including a specific emission rate limit..

F. TAP Compliance Using Net Ambient Concentration (Rules Section 210.10)

☐ Determine the emission increase from the new source or modification, and all other creditable emission increases and decrease using the methods described above in compliance Method E.

☐ Model the emissions increases and decreases for each TAP. Modeling TAP decreases is accomplished by using negative valued emissions rates in the model input.

☐ If the net ambient concentration is less than or equal to the applicable ambient concentration increment listed in Rules Section 585 and 586, no further procedures for demonstrating preconstruction compliance are required.

☐ The Department shall include emission limits and other permit terms for the TAP in the permit to construct that will assure that the facility will be operated in the manner described in the preconstruction compliance demonstration (Rules Section 210.10.d).

In some instances the Department may consider a throughput limit or other inherently-limiting operational restriction in a permit as an effective emission limit for the TAP, rather than including a specific emission rate limit..

G. TAP Compliance Using T-RACT Ambient Concentration for Carcinogens (Rules Section 210.12)

The applicant may use T-RACT to demonstrate preconstruction compliance for TAPs listed in Rules Section 586 only.

T-RACT is an emissions standard based on the lowest emission of TAPs that a particular source is capable of meeting by application of control technology that is reasonably available, as determined by the Department, considering technological and economic feasibility. If control technology is not feasible, the emission standard may be based on the application of a design, equipment, work practice or operational requirement, or combination thereof (Rules Section 007.16).

T-RACT Submittal Requirements

☐ The applicant shall submit the following information to the Department identifying and documenting which control technologies or other requirements the applicant believes to be T-RACT (Rules Section 210.14).

The technical feasibility of a control technology or other requirements for a particular source shall be determined considering several factors including but not limited to:

- ☐ Process and operating procedures, raw materials and physical plant layout.
- ☐ The environmental impacts caused by the control technology that can not be mitigated, including but not limited to, water pollution and the production of solid wastes.

☐ The energy requirements of the control technology.

The economic feasibility of a control technology or other requirement, including the costs of necessary mitigation measures, for a particular source shall be determined considering several factors including, but not limited to:

☐ Capital costs.

☐ Cost effectiveness, which is the annualized cost of the control technology divided by the amount of emission reduction.

☐ The difference in costs between the particular source and other similar sources, if any, that have implemented emissions reductions.

☐ Compare the source's or modification's approved T-RACT ambient concentration to the applicable acceptable ambient concentration increment listed in Rules Section 586 multiplied by a factor of 10. If the sources approved T-RACT concentration is less than or equal to 10 times the applicable acceptable ambient concentration increment listed in Rules Section 586, no further procedures for demonstrating preconstruction compliance will be required.

☐ If an application is submitted to the Department without T-RACT and determined complete, and T-RACT is later determined to be applicable the completeness determination of the application will be revoked until a supplemental application is submitted and determined complete. When the supplemental application is determined complete, the timeline for agency action shall be reinitiated (Rules Section 210.13.b).

☐ If the Department determines that the source has proposed T-RACT, the Department shall develop emission standards to be incorporated into a permit to construct.

In some instances, the Department may consider a throughput limit or other inherently limiting operational restriction in a permit as an effective emission limit for the TAP, rather than including a specific emission rate limit..

H. TAP Compliance Using the Short Term Source Factor (Rules Section 210.15)

☐ For short term sources, the applicant may utilize a short term adjustment factor of ten (10) only for a carcinogenic pollutant listed in Rules Section 586. For a carcinogen listed in Rules Section 586 multiply either the applicable acceptable ambient concentration increment or the screening emission rate (EL), but not both, by ten (10) to demonstrate preconstruction compliance (Rules Section 210.15).

☐ A short term source is any new stationary source or modification to an existing source, with an operational life no greater than five (5) years from the inception of any operations to cessation of actual operations (Rules Section 210.15).

I. TAP Compliance for Environmental Remediation Sources (Rules Section 210.16)

☐ For remediation sources subject to or regulated by the Resource Conservation and Recovery Act and the Idaho Rules and Standard for Hazardous Waste, or the comprehensive Environmental Response, Compensation and Liability Act or a consent order, if the estimated ambient concentration is greater than the acceptable ambient impact increment listed in Rules Section 585 and 586, Best Available Control Technology shall be applied and operated until the estimated uncontrolled emission from the remediation source are below the applicable acceptable ambient concentration increment (Rules Section 210.16).

J. <u>TAP Compliance Using Offset Ambient Concentration (Rules Section 210.11)</u>

☐ Contact the Department prior to proposing to utilize Offset Ambient Concentrations to demonstrate preconstruction compliance.

☐ Emission offsets must satisfy the requirements for emission reduction credits (Rules Section 460).

- The proposed level of allowable emissions must be less than the actual emissions of the emissions units providing the offsets (Rules Section 460.01).
- An air quality permit must be issued that restricts the potential to emit of the emission unit providing the offset.
- Emission reduction imposed by local, state or federal regulations or permits shall not be allowed.

☐ Compare the source's or modifications approved emission offset ambient concentration to the applicable acceptable ambient concentration listed in Rules Section 585 and 586. If the source's or modifications approved offset concentration is less than the acceptable ambient concentration listed in Rules Section 585 and 586, no further procedures for demonstrating preconstruction compliance will be required.

☐ The Department shall include emission limits and other permit terms for the TAP in the permit to construct that will assure that the facility will be operated in the manner described in the preconstruction compliance demonstration (Rules Section 210.10.d).

DEQ AIR QUALITY PROGRAM
1410 N. Hilton, Boise, ID 83706
For assistance, call the
Air Permit Hotline – 1-877-5PERMIT

General Information **Form GI**
Revision 7
2/18/10

Please see instructions on page 2 before filling out the form.

All information is required. If information is missing, the application will not be processed.

IDENTIFICATION

1. Company Name	2. Facility Name:
Dynamis Energy, LLC	Hidden Hollow Waste-to-Energy (WTE) Facility

3. Brief Project Description:	Design, build and operation of a waste-to-energy facility at the Hidden Hollow Landfill

FACILITY INFORMATION

4. Primary Facility Permit Contact Person/Title	Doyle Pergande		Engineer	
5. Telephone Number and Email Address	(208) 938-2680		doyle@dynamisgroup.com	
6. Alternate Facility Contact Person/Title	C. LLoyd Mahaffey		Chairman & CEO	
7. Telephone Number and Email Address	(208) 938-2680		lloyd@dynamisgroup.com	
8. Address to Which the Permit Should be Sent	776 E. Riverside Drive, Suite 150			
9. City/County/State/Zip Code	Eagle	Ada	Idaho	83616
10. Equipment Location Address (if different than the mailing address above)	Hidden Hollow Landfill, 10300 Seamans Gulch Rd			
11. City/County/State/Zip Code	Boise	Ada	Idaho	83702
12. Is the Equipment Portable?	☐ Yes ☒ No			
13. SIC Code(s) and NAICS Code	Primary SIC: 4953	Secondary SIC:	NAICS:	
14. Brief Business Description and Principal Product	Waste-to-Energy technology development, design, build and operation			
15. Indentify any adjacent or contiguous facility that this company owns and/or operates	NA			
16. Specify the reason for the application	☒ Permit to Construct (PTC) For Tier I permitted facilities only: If you are applying for a PTC then you must also specify how the PTC will be incorporated into the Tier I permit. ☐ Incorporate the PTC at the time of the Tier I renewal ☐ Co-process the Tier I modification and PTC ☐ Administratively amend the Tier I permit to incorporate the PTC upon your request (IDAPA 58.01.01.209.05.a, b, or c) ☐ Tier I Permit ☐ Tier II Permit ☐ Tier II/Permit to Construct			

CERTIFICATION

In accordance with **IDAPA 58.01.01.123 (R**ules for the **C**ontrol of **A**ir **P**ollution in **I**daho**), I** certify based on information and belief formed after reasonable inquiry, the statements and information in the document(s) are true, accurate, and complete.

17. Responsible Official's Name/Title	C. Lloyd Mahaffey	Chairman & CEO	
18. Responsible Official's Signature		Date:	4-25-12

19. ☒ Check here to indicate that you would like to review the draft permit prior to final issuance.

DEQ AIR QUALITY PROGRAM
1410 N. Hilton, Boise, ID 83706
For assistance, call the
Air Permit Hotline – 1-877-5PERMIT

Cover Sheet for Air Permit Application – Permit to Construct **Form CSPTC**

Please see instructions on page 2 before filling out the form.

COMPANY NAME, FACILITY NAME, AND FACILITY ID NUMBER			
1. Company Name	Dynamis Energy, LLC		
2. Facility Name	Hidden Hollow Waste-To-Energy (WTE) Facility	3. Facility ID No.	
4. Brief Project Description - One sentence or less	Municipal solid waste thermal conversion facility located at the Ada County Landfill		

PERMIT APPLICATION TYPE

5. ☒ New Source ☐ New Source at Existing Facility ☐ PTC for a Tier I Source Processed Pursuant to IDAPA 58.01.01.209.05.c
☐ Unpermitted Existing Source ☐ Facility Emissions Cap ☐ Modify Existing Source: Permit No.:_____ Date Issued:_____
☐ Required by Enforcement Action: Case No.:_____

6. ☒ Minor PTC ☐ Major PTC

FORMS INCLUDED

Included	N/A	Forms		DEQ Verify
☒	☐	Form CSPTC – Cover Sheet		☐
☒	☐	Form GI – Facility Information		☐
☒	☐	Form EU0 – Emissions Units General		☐
☒	☐	Form EU1– Industrial Engine Information	Please specify number of EU1s attached: 1	☐
☐	☒	Form EU2– Nonmetallic Mineral Processing Plants	Please specify number of EU2s attached: _____	☐
☐	☒	Form EU3– Spray Paint Booth Information	Please specify number of EU3s attached: _____	☐
☒	☐	Form EU4– Cooling Tower Information	Please specify number of EU3s attached: 1	☐
☒	☐	Form EU5 – Boiler Information	Please specify number of EU4s attached: 1	☐
☐	☒	Form CBP– Concrete Batch Plant	Please specify number of CBPs attached: _____	☐
☐	☒	Form HMAP – Hot Mix Asphalt Plant	Please specify number of HMAPs attached: _____	☐
☐	☒	PERF – Portable Equipment Relocation Form		☐
☐	☒	Form AO – Afterburner/Oxidizer		☐
☐	☒	Form CA – Carbon Adsorber		☐
☐	☒	Form CYS – Cyclone Separator		☐
☐	☒	Form ESP – Electrostatic Precipitator		☐
☒	☐	Form BCE– Baghouses Control Equipment		☐
☒	☐	Form SCE– Scrubbers Control Equipment		☐
☐	☒	Form VSCE – Venturi Scrubber Control Equipment		☐
☐	☒	Form CAM – Compliance Assurance Monitoring		☐
☒	☐	Forms EI-– Emissions Inventory		☐
☒	☐	PP – Plot Plan		☐
☒	☐	Forms MI1 – MI4 – Modeling	(Excel workbook, all 4 worksheets)	☐
☒	☐	Form FRA – Federal Regulation Applicability		☐

DEQ AIR QUALITY PROGRAM
1410 N. Hilton, Boise, ID 83706
For assistance, call the
Air Permit Hotline – 1-877-5PERMIT

Emissions Unit - General **Form EU0**
Revision 4
08/28/08

Please see instructions on page 2 before filling out the form.

IDENTIFICATION

1. Company Name:	2. Facility Name:	3. Facility ID No:
Dynamis Energy, LLC	Hidden Hollow Waste-to-Energy Facility	

4. Brief Project Description:	Design, build and operation of a waste-to-energy facility at the Hidden Hollow Landfill

EMISSIONS UNIT (PROCESS) IDENTIFICATION & DESCRIPTION

5. Emissions Unit (EU) Name:	THERMAL CONVERSION UNIT
6. EU ID Number:	EU-1
7. EU Type:	☒ New Source ☐ Unpermitted Existing Source ☐ Modification to a Permitted Source -- Previous Permit #: Date Issued:
8. Manufacturer:	DYNAMIS ENERGY, LLC
9. Model:	TBD
10.. Maximum Capacity:	408 TPD
11. Date of Construction:	2012
12. Date of Modification (if any):	NA
13. Is this a Controlled Emission Unit?	☒ No ☐ Yes If Yes, complete the following section. If No, go to line 22.

EMISSIONS CONTROL EQUIPMENT

14. Control Equipment Name and ID:	Scrubber - EU8		
15. Date of Installation:	2012	16. Date of Modification (if any):	n/a
17. Manufacturer and Model Number:	Direct Contact, LLC - DCI-HTR Scrubbing Heat Recovery System		
18. ID(s) of Emission Unit Controlled:	EU1, EU2		
19. Is operating schedule different than emission units(s) involved?	☐ Yes ☒ No		
20. Does the manufacturer guarantee the control efficiency of the control equipment?	☒ Yes ☐ No (If Yes, attach and label manufacturer guarantee)		

	Pollutant Controlled					
	PM	PM10	SO_2	NOx	VOC	CO
Control Efficiency		41% control of PM2.5	71.25%			

21. If manufacturer's data is not available, attach a separate sheet of paper to provide the control equipment design specifications and performance data to support the above mentioned control efficiency.

EMISSION UNIT OPERATING SCHEDULE (hours/day, hours/year, or other)

22. Actual Operation:	8760 HOURS/YEAR
23. Maximum Operation:	5840 HOURS/YEAR PEAK, 2920 HOURS/YEAR OFF PEAK

REQUESTED LIMITS

24. Are you requesting any permit limits?	☒ Yes ☐ No (If Yes, indicate all that apply below)
☐ Operation Hour Limit(s):	
☐ Production Limit(s):	
☒ Material Usage Limit(s):	408 TON PER DAY MSW ; 112,000 SCF/DAY NATURAL GAS
☐ Limits Based on Stack Testing:	Please attach all relevant stack testing summary reports
☐ Other:	
25. Rationale for Requesting the Limit(s):	TO COMPLY WITH AMBIENT STANDARDS

DEQ AIR QUALITY PROGRAM
1410 N. Hilton, Boise, ID 83706
For assistance, call the
Air Permit Hotline – 1-877-5PERMIT

Emissions Unit - General **Form EU0**
Revision 4
08/28/08

Please see instructions on page 2 before filling out the form.

IDENTIFICATION

1. Company Name:	2. Facility Name:	3. Facility ID No:
Dynamis Energy, LLC	Hidden Hollow Waste-to-Energy Facility	

4. Brief Project Description:	Design, build and operation of a waste-to-energy facility at the Hidden Hollow Landfill

EMISSIONS UNIT (PROCESS) IDENTIFICATION & DESCRIPTION

5.	Emissions Unit (EU) Name:	PRIMARY CHAMBER IGNITION SYSTEM
6.	EU ID Number:	EU-2
7.	EU Type:	☒ New Source ☐ Unpermitted Existing Source ☐ Modification to a Permitted Source -- Previous Permit #: Date Issued:
8.	Manufacturer:	DYNAMIS ENERGY, LLC
9.	Model:	TBD
10..	Maximum Capacity:	112,000 SCF/DAY
11.	Date of Construction:	2012
12.	Date of Modification (if any):	NA
13.	Is this a Controlled Emission Unit?	☒ No ☐ Yes If Yes, complete the following section. If No, go to line 22.

EMISSIONS CONTROL EQUIPMENT

14. Control Equipment Name and ID:	Scrubber - EU8		
15. Date of Installation:	2012	16. Date of Modification (if any):	
17. Manufacturer and Model Number:	Direct Contact, LLC - DCI-HTR Scrubbing Heat Recovery System		
18. ID(s) of Emission Unit Controlled:	EU 1 and EU 2		
19. Is operating schedule different than emission units(s) involved?	☐ Yes ☒ No		
20. Does the manufacturer guarantee the control efficiency of the control equipment?	☒ Yes ☐ No (If Yes, attach and label manufacturer guarantee)		

	Pollutant Controlled					
	PM	PM10	SO_2	NOx	VOC	CO
Control Efficiency		41% control of PM2.5	71.25%			

21. If manufacturer's data is not available, attach a separate sheet of paper to provide the control equipment design specifications and performance data to support the above mentioned control efficiency.

EMISSION UNIT OPERATING SCHEDULE (hours/day, hours/year, or other)

22.	Actual Operation:	8760 HOURS/YEAR
23.	Maximum Operation:	8760 HOURS/YEAR

REQUESTED LIMITS

24.	Are you requesting any permit limits?	☒ Yes ☐ No (If Yes, indicate all that apply below)
	☐ Operation Hour Limit(s):	
	☐ Production Limit(s):	
	☒ Material Usage Limit(s):	112,000 SCF/DAY NATURAL GAS
	☐ Limits Based on Stack Testing:	Please attach all relevant stack testing summary reports
	☐ Other:	
25.	Rationale for Requesting the Limit(s):	TO COMPLY WITH AMBIENT STANDARDS

DEQ AIR QUALITY PROGRAM
1410 N. Hilton, Boise, ID 83706
For assistance, call the
Air Permit Hotline – 1-877-5PERMIT

Emissions Unit - General **Form EU0**
Revision 4
08/28/08

Please see instructions on page 2 before filling out the form.

IDENTIFICATION

1. Company Name:	2. Facility Name:	3. Facility ID No:
Dynamis Energy, LLC	Hidden Hollow Waste-to-Energy Facility	

4. Brief Project Description:	Design, build and operation of a waste-to-energy facility at the Hidden Hollow Landfill

EMISSIONS UNIT (PROCESS) IDENTIFICATION & DESCRIPTION

5.	Emissions Unit (EU) Name:	COOLING TOWER #1
6.	EU ID Number:	EU-3
7.	EU Type:	☒ New Source ☐ Unpermitted Existing Source ☐ Modification to a Permitted Source -- Previous Permit #: Date Issued:
8.	Manufacturer:	CCS
9.	Model:	2-FT-4646-200-P7-FM
10..	Maximum Capacity:	8500 gpm
11.	Date of Construction:	2012
12.	Date of Modification (if any):	NA
13.	Is this a Controlled Emission Unit?	☒ No ☐ Yes If Yes, complete the following section. If No, go to line 22.

EMISSIONS CONTROL EQUIPMENT

14. Control Equipment Name and ID:		
15. Date of Installation:	16. Date of Modification (if any):	
17. Manufacturer and Model Number:		
18. ID(s) of Emission Unit Controlled:		
19. Is operating schedule different than emission units(s) involved?	☐ Yes ☐ No	
20. Does the manufacturer guarantee the control efficiency of the control equipment?	☐ Yes ☐ No (If Yes, attach and label manufacturer guarantee)	

	Pollutant Controlled					
	PM	PM10	SO_2	NOx	VOC	CO
Control Efficiency						

21. If manufacturer's data is not available, attach a separate sheet of paper to provide the control equipment design specifications and performance data to support the above mentioned control efficiency.

EMISSION UNIT OPERATING SCHEDULE (hours/day, hours/year, or other)

22.	Actual Operation:	8760 HOURS/YEAR
23.	Maximum Operation:	8760 HOURS/YEAR

REQUESTED LIMITS

24.	Are you requesting any permit limits?	☐ Yes ☒ No (If Yes, indicate all that apply below)
	☐ Operation Hour Limit(s):	
	☐ Production Limit(s):	
	☐ Material Usage Limit(s):	
	☐ Limits Based on Stack Testing:	Please attach all relevant stack testing summary reports
	☐ Other:	
25.	Rationale for Requesting the Limit(s):	

DEQ AIR QUALITY PROGRAM
1410 N. Hilton, Boise, ID 83706
For assistance, call the
Air Permit Hotline – 1-877-5PERMIT

Emissions Unit - General **Form EU0**
Revision 4
08/28/08

Please see instructions on page 2 before filling out the form.

IDENTIFICATION

1. Company Name:	2. Facility Name:	3. Facility ID No:
Dynamis Energy, LLC	Hidden Hollow Waste-to-Energy Facility	

4. Brief Project Description:	Design, build and operation of a waste-to-energy facility at the Hidden Hollow Landfill

EMISSIONS UNIT (PROCESS) IDENTIFICATION & DESCRIPTION

5.	Emissions Unit (EU) Name:	COOLING TOWER #2
6.	EU ID Number:	EU-4
7.	EU Type:	☒ New Source ☐ Unpermitted Existing Source ☐ Modification to a Permitted Source -- Previous Permit #: Date Issued:
8.	Manufacturer:	CCS
9.	Model:	2-FT-4646-200-P7-FM
10..	Maximum Capacity:	8500 GPM
11.	Date of Construction:	2012
12.	Date of Modification (if any):	NA
13.	Is this a Controlled Emission Unit?	☒ No ☐ Yes If Yes, complete the following section. If No, go to line 22.

EMISSIONS CONTROL EQUIPMENT

14. Control Equipment Name and ID:			
15. Date of Installation:		16. Date of Modification (if any):	
17. Manufacturer and Model Number:			
18. ID(s) of Emission Unit Controlled:			
19. Is operating schedule different than emission units(s) involved?	☐ Yes ☐ No		
20. Does the manufacturer guarantee the control efficiency of the control equipment?	☐ Yes ☐ No (If Yes, attach and label manufacturer guarantee)		

	Pollutant Controlled					
	PM	PM10	SO_2	NOx	VOC	CO
Control Efficiency						

21. If manufacturer's data is not available, attach a separate sheet of paper to provide the control equipment design specifications and performance data to support the above mentioned control efficiency.

EMISSION UNIT OPERATING SCHEDULE (hours/day, hours/year, or other)

22.	Actual Operation:	8760 HOURS/YEAR
23.	Maximum Operation:	8760 HOURS/YEAR

REQUESTED LIMITS

24.	Are you requesting any permit limits?	☐ Yes ☒ No (If Yes, indicate all that apply below)
	☐ Operation Hour Limit(s):	
	☐ Production Limit(s):	
	☐ Material Usage Limit(s):	
	☐ Limits Based on Stack Testing:	Please attach all relevant stack testing summary reports
	☐ Other:	
25.	Rationale for Requesting the Limit(s):	

DEQ AIR QUALITY PROGRAM
1410 N. Hilton, Boise, ID 83706
For assistance, call the
Air Permit Hotline – 1-877-5PERMIT

Emissions Unit - General **Form EU0**
Revision 4
08/28/08

Please see instructions on page 2 before filling out the form.

IDENTIFICATION

1. Company Name:	2. Facility Name:	3. Facility ID No:
Dynamis Energy, LLC	Hidden Hollow Waste-to-Energy Facility	

4. Brief Project Description:	Design, build and operation of a waste-to-energy facility at the Hidden Hollow Landfill

EMISSIONS UNIT (PROCESS) IDENTIFICATION & DESCRIPTION

5.	Emissions Unit (EU) Name:	ASH HANDLING/COLLECTION SYSTEM
6.	EU ID Number:	EU-5
7.	EU Type:	☒ New Source ☐ Unpermitted Existing Source ☐ Modification to a Permitted Source -- Previous Permit #: Date Issued:
8.	Manufacturer:	DONALDSON TORIT
9.	Model:	TBD
10..	Maximum Capacity:	14,000 CFM
11.	Date of Construction:	2012
12.	Date of Modification (if any):	NA
13.	Is this a Controlled Emission Unit?	☐ No ☒ Yes If Yes, complete the following section. If No, go to line 22.

EMISSIONS CONTROL EQUIPMENT

14. Control Equipment Name and ID:	Ash System Baghouse		
15. Date of Installation:	2012	16. Date of Modification (if any):	NA
17. Manufacturer and Model Number:	Donaldson Torit		
18. ID(s) of Emission Unit Controlled:	EU-5		
19. Is operating schedule different than emission units(s) involved?	☐ Yes ☒ No		
20. Does the manufacturer guarantee the control efficiency of the control equipment?	☒ Yes ☐ No (If Yes, attach and label manufacturer guarantee)		

	Pollutant Controlled					
	PM	PM10	SO_2	NOx	VOC	CO
Control Efficiency		0.005 gr/dscf PM2.5				

21. If manufacturer's data is not available, attach a separate sheet of paper to provide the control equipment design specifications and performance data to support the above mentioned control efficiency.

EMISSION UNIT OPERATING SCHEDULE (hours/day, hours/year, or other)

22.	Actual Operation:	8760 HOURS/YEAR
23.	Maximum Operation:	8760 HOURS/YEAR

REQUESTED LIMITS

24.	Are you requesting any permit limits?	☐ Yes ☒ No (If Yes, indicate all that apply below)
	☒ Operation Hour Limit(s):	Ash system exhaust/baghouse will operate 45 min/hr
	☐ Production Limit(s):	
	☐ Material Usage Limit(s):	
	☐ Limits Based on Stack Testing:	Please attach all relevant stack testing summary reports
	☐ Other:	
25.	Rationale for Requesting the Limit(s):	Compliance with ambient standards

DEQ AIR QUALITY PROGRAM
1410 N. Hilton, Boise, ID 83706
For assistance, call the
Air Permit Hotline – 1-877-5PERMIT

Emissions Unit - General **Form EU0**
Revision 4
08/28/08

Please see instructions on page 2 before filling out the form.

IDENTIFICATION

1. Company Name:	2. Facility Name:	3. Facility ID No:
Dynamis Energy, LLC	Hidden Hollow Waste-to-Energy Facility	

4. Brief Project Description:	Design, build and operation of a waste-to-energy facility at the Hidden Hollow Landfill

EMISSIONS UNIT (PROCESS) IDENTIFICATION & DESCRIPTION

5.	Emissions Unit (EU) Name:	EMERGENCY GENERATOR
6.	EU ID Number:	EU-6
7.	EU Type:	☒ New Source ☐ Unpermitted Existing Source ☐ Modification to a Permitted Source -- Previous Permit #: Date Issued:
8.	Manufacturer:	CATERPILLAR
9.	Model:	C9 ACERT
10..	Maximum Capacity:	300 KW
11.	Date of Construction:	2012
12.	Date of Modification (if any):	NA
13.	Is this a Controlled Emission Unit?	☒ No ☐ Yes If Yes, complete the following section. If No, go to line 22.

EMISSIONS CONTROL EQUIPMENT

14. Control Equipment Name and ID:		
15. Date of Installation:	16. Date of Modification (if any):	
17. Manufacturer and Model Number:		
18. ID(s) of Emission Unit Controlled:		
19. Is operating schedule different than emission units(s) involved?	☐ Yes ☐ No	
20. Does the manufacturer guarantee the control efficiency of the control equipment?	☐ Yes ☐ No (If Yes, attach and label manufacturer guarantee)	

	Pollutant Controlled					
	PM	PM10	SO_2	NOx	VOC	CO
Control Efficiency						

21. If manufacturer's data is not available, attach a separate sheet of paper to provide the control equipment design specifications and performance data to support the above mentioned control efficiency.

EMISSION UNIT OPERATING SCHEDULE (hours/day, hours/year, or other)

22.	Actual Operation:	500 HOURS/YEAR
23.	Maximum Operation:	500 HOURS/YEAR

REQUESTED LIMITS

24.	Are you requesting any permit limits?	☒ Yes ☐ No (If Yes, indicate all that apply below)
	☒ Operation Hour Limit(s):	500 HOURS/YEAR
	☐ Production Limit(s):	
	☐ Material Usage Limit(s):	
	☐ Limits Based on Stack Testing:	Please attach all relevant stack testing summary reports
	☒ Other:	TESTING/MAINTENANCE 4 TIMES OR LESS PER QUARTER
25.	Rationale for Requesting the Limit(s):	TO MEET REQUIREMENTS FOR EMERGERNCY GENERATORS

DEQ AIR QUALITY PROGRAM
1410 N. Hilton, Boise, ID 83706
For assistance, call the
Air Permit Hotline – 1-877-5PERMIT

Emissions Unit - General **Form EU0**
Revision 4
08/28/08

Please see instructions on page 2 before filling out the form.

IDENTIFICATION

1. Company Name:	2. Facility Name:	3. Facility ID No:
Dynamis Energy, LLC	Hidden Hollow WTE Facility	

4. Brief Project Description:	Design, build and operation of a waste-to-energy facility at the Hidden Hollow Landfill

EMISSIONS UNIT (PROCESS) IDENTIFICATION & DESCRIPTION

5.	Emissions Unit (EU) Name:	Ash System Baghouse
6.	EU ID Number:	EU7
7.	EU Type:	☒ New Source ☐ Unpermitted Existing Source ☐ Modification to a Permitted Source -- Previous Permit #: Date Issued:
8.	Manufacturer:	DONALDSON TORIT
9.	Model:	DFO 3-24
10..	Maximum Capacity:	14,000 CFM
11.	Date of Construction:	2012
12.	Date of Modification (if any):	
13.	Is this a Controlled Emission Unit?	☒ No ☐ Yes If Yes, complete the following section. If No, go to line 22.

EMISSIONS CONTROL EQUIPMENT

14. Control Equipment Name and ID:			
15. Date of Installation:		16. Date of Modification (if any):	
17. Manufacturer and Model Number:			
18. ID(s) of Emission Unit Controlled:			
19. Is operating schedule different than emission units(s) involved?	☐ Yes ☐ No		
20. Does the manufacturer guarantee the control efficiency of the control equipment?	☐ Yes ☐ No (If Yes, attach and label manufacturer guarantee)		

	Pollutant Controlled					
	PM	PM10	SO_2	NOx	VOC	CO
Control Efficiency						

21. If manufacturer's data is not available, attach a separate sheet of paper to provide the control equipment design specifications and performance data to support the above mentioned control efficiency.

EMISSION UNIT OPERATING SCHEDULE (hours/day, hours/year, or other)

22.	Actual Operation:	
23.	Maximum Operation:	

REQUESTED LIMITS

24.	Are you requesting any permit limits?	☐ Yes ☐ No (If Yes, indicate all that apply below)
	☐ Operation Hour Limit(s):	
	☐ Production Limit(s):	
	☐ Material Usage Limit(s):	
	☐ Limits Based on Stack Testing:	Please attach all relevant stack testing summary reports
	☐ Other:	
25.	Rationale for Requesting the Limit(s):	

DEQ AIR QUALITY PROGRAM
1410 N. Hilton, Boise, ID 83706
For assistance, call the
Air Permit Hotline – 1-877-5PERMIT

Emissions Unit - General **Form EU0**
Revision 4
08/28/08

Please see instructions on page 2 before filling out the form.

IDENTIFICATION

1. Company Name:	2. Facility Name:	3. Facility ID No:
Dynamis Energy, LLC	Hidden Hollow WTE Facility	

4. Brief Project Description:	Design, build and operation of a waste-to-energy facility at the Hidden Hollow Landfill

EMISSIONS UNIT (PROCESS) IDENTIFICATION & DESCRIPTION

5.	Emissions Unit (EU) Name:	SCRUBBER
6.	EU ID Number:	EU8
7.	EU Type:	☒ New Source ☐ Unpermitted Existing Source ☐ Modification to a Permitted Source -- Previous Permit #: Date Issued:
8.	Manufacturer:	DIRECT CONTACT, LLC
9.	Model:	DCI-HTR
10..	Maximum Capacity:	
11.	Date of Construction:	2012
12.	Date of Modification (if any):	
13.	Is this a Controlled Emission Unit?	☒ No ☐ Yes If Yes, complete the following section. If No, go to line 22.

EMISSIONS CONTROL EQUIPMENT

14. Control Equipment Name and ID:			
15. Date of Installation:		16. Date of Modification (if any):	
17. Manufacturer and Model Number:			
18. ID(s) of Emission Unit Controlled:			
19. Is operating schedule different than emission units(s) involved?	☐ Yes ☐ No		
20. Does the manufacturer guarantee the control efficiency of the control equipment?	☐ Yes ☐ No (If Yes, attach and label manufacturer guarantee)		

	Pollutant Controlled					
	PM	PM10	SO_2	NOx	VOC	CO
Control Efficiency						

21. If manufacturer's data is not available, attach a separate sheet of paper to provide the control equipment design specifications and performance data to support the above mentioned control efficiency.

EMISSION UNIT OPERATING SCHEDULE (hours/day, hours/year, or other)

22.	Actual Operation:	
23.	Maximum Operation:	

REQUESTED LIMITS

24.	Are you requesting any permit limits?	☐ Yes ☐ No (If Yes, indicate all that apply below)
	☐ Operation Hour Limit(s):	
	☐ Production Limit(s):	
	☐ Material Usage Limit(s):	
	☐ Limits Based on Stack Testing:	Please attach all relevant stack testing summary reports
	☐ Other:	
25.	Rationale for Requesting the Limit(s):	

DEQ AIR QUALITY PROGRAM
1410 N. Hilton, Boise, ID 83706
For assistance, call the
Air Permit Hotline – 1-877-5PERMIT

Emissions Units - Industrial Engine Information **Form EU1**
Revision 8
1/15/10

Please see instructions on page 2 before filling out the form.

IDENTIFICATION

1. Company Name:	2. Facility Name:	
Dynamis Energy, LLC	Hidden Hollow WTE Facility	
3 Brief Project Description:	Design, build and operation of a waste-to-energy facility at the Hidden Hollow Landfill	

ENGINE (EMISSION UNIT) DESCRIPTION AND SPECIFICATIONS

4. Type of Unit:	☒ New Unit ☐ Unpermitted Existing Unit ☐ Modification to a Unit with Permit #: Date Issued:		
5. Engine Displacement:	1.46 (liters per cylinder)	6. Ignition Type:	☒ Compression ☐ Spark
7. Use	☒ Emergency ☐ Non-Emergency		
8. Engine ID Number:	9. Maximum Rated Engine Power:		
TBD, 480 BHP	_____ Brake Horsepower (bhp)		
10. Construction Date:	11. Manufacturer:	12. Model:	13. Model Year:
2012	Caterpillar	C9 ACERT	2010
14. Date of Modification (if applicable):	15. Serial Number (if available):	16. Control Device (if any):	
NA	TBD	NA	

FUEL DESCRIPTION AND SPECIFICATIONS

17. Fuel Type	☒ Diesel Fuel (#2) (gal/hr)	☐ Gasoline Fuel (gal/hr)	☐ Natural Gas (cf/hr)	☐ Other Fuels (unit:)
18. Full Load Consumption Rate	22.7			
19. Actual Consumption Rate	TBD			
20. Sulfur Content wt%	0.05%	N/A	N/A	

OPERATING LIMITS & SCHEDULE

21. Imposed Operating Limits (hours/year, or gallons fuel/year, etc.):

500 hours/year

22. Operating Schedule (hours/day, months/year, etc.):

as needed for emergency, testing maximum 4 times per quarter between 7am and 7pm

DEQ AIR QUALITY PROGRAM
1410 N. Hilton, Boise, ID 83706
For assistance, call the
Air Permit Hotline – 1-877-5PERMIT

Emissions Units - Cooling Towers Information **Form EU4**
Revision 5
08/28/08

Please see instructions on page 2 before filling out the form.

IDENTIFICATION		
1. Company Name:	2. Facility Name:	3. Facility ID No:
Dynamis Energy, LLC	Hidden Hollow WTE Facility	
4. Brief Project Description:	Design, build and operation of a waste-to-energy facility at the Hidden Hollow Landfill	

COOLING TOWER IDENTIFICATION AND DESCRIPTION				
	Tower 1	Tower 2	Tower 3	Tower 4
5. Emission Unit Name	Cooling Tower #1	Cooling Tower #2		
6. Emission Unit ID Number	EU-3	EU-4		
7. Stack/Vent ID Number	CT1	CT2		
8. Tower Type (N: New, U: Unpermitted, M: Modification)	☒ N, ☐ U, ☐ M	☒ N, ☐ U, ☐ M	☐ N, ☐ U, ☐ M	☐ N, ☐ U, ☐ M
9. Current Permit Number	NA	NA		
10. Tower Construction Date	2012	2012		
11. Tower Manufacturer	CCS	CCS		
12. Tower Model Number	2-FT-4646-200-P7-FM	2-FT-4646-200-P7-FM		
13. Number of Cells in Tower	1	1		
14. Tower Maximum Water Flow Rate	8500 gpm	8500 gpm		
15. Measured TDS Content (if known)	94 ppm	94 ppm		
16. Do you use additives in the water? If Yes, provide an MSDS form for each additive	☒ No ☐ Yes	☒ No ☐ Yes	☐ No ☐ Yes	☐ No ☐ Yes
CONTROL EQUIPMENT INFORMATION				
17. Control Equipment	☒ No ☐ Yes	☒ No ☐ Yes	☐ No ☐ Yes	☐ No ☐ Yes
18. Control Equipment ID Number				
19. Control Equipment Efficiency				
OPERATING SCHEDULE				
20. Actual Operation (hours per year)	8760	8760		
21. Maximum Operation (hours per year)	8760	8760		

REQUEST FOR PERMIT LIMITATIONS				
22 Are you requesting any permit limits?	☒ No ☐ Yes. If Yes, fill in all that apply below.			
Tower Served	Operation Hour Limits:	TDS Limits (ppm):	Material Usage Limits:	Other:
Tower 1				
Tower 2				
Tower 3				
Tower 4				
23. Rationale for Requesting the Limit(s):				

DEQ AIR QUALITY PROGRAM
1410 N. Hilton, Boise, ID 83706
For assistance, call the
Air Permit Hotline – 1-877-5PERMIT

Emissions Units - Industrial Boiler Information **Form EU5**
Revision 5
08/28/08

Please see instructions on page 2 before filling out the form.

IDENTIFICATION

1. Company Name:	2. Facility Name:	3 Facility ID No:
Dynamis Energy, LLC	Hidden Hollow WTE Facility	
4. Brief Project Description:	Design, build and operation of a waste-to-energy facility at the Hidden Hollow Landfill	

EXEMPTION

Please see IDAPA 58.01.01.222 for a list of industrial boilers that are exempt from Permit to Construct requirements.

BOILER (EMISSION UNIT) DESCRIPTION AND SPECIFICATIONS

5. Type of Request: ☒ New Unit ☐ Unpermitted Existing Unit ☐ Modification to a Unit with Permit #:

6. Use of Boiler: ☐ % Used For Process ☐ % Used For Space Heat ☒ % Used For Generating Electricity ☐ Other:

7. Boiler ID Number: Boiler #1	8. Rated Capacity: ☒ 230 Million British Thermal Units Per Hour (MMBtu/hr) ☐ 1,000 Pounds Steam Per Hour (1,000 lb steam/hr)	
9. Construction Date: 2012	10. Manufacturer: Victory Energy	11. Model: n/a
12. Date of Modification (if applicable): NA	13. Serial Number (if available): TBD	14. Control Device (if any): NA **Note: Attach applicable control equipment form(s)**

FUEL DESCRIPTION AND SPECIFICATIONS

15. Fuel Type	☐ Diesel Fuel (#) (gal/hr)	☐ Natural Gas (cf/hr)	☐ Coal (unit: /hr)	☒ Other Fuels (unit:lbs /hr)
16. Full Load Consumption Rate				633,000
17. Actual Consumption Rate				561,861
18. Fuel Heat Content (Btu/unit, LHV)				5800
19. Sulfur Content wt%				0.0035
20. Ash Content wt%		N/A		0.004

STEAM DESCRIPTION AND SPECIFICATIONS

21. Steam Heat Content	NA	NA		1400 btu/lb
22. Steam Temperature (^{o}F)	N/A	N/A		825
23. Steam Pressure (psi)	N/A	N/A		900
24 Steam Type	N/A	N/A	☐ Saturated ☐ Superheated	☐ Saturated ☒ Superheated

OPERATING LIMITS & SCHEDULE

25. Imposed Operating Limits (hours/year, or gallons fuel/year, etc.):	8760
26. Operating Schedule (hours/day, months/year, etc.):	24/7/365
27. NSPS Applicability: ☐ Yes ☒ No	If Yes, which subpart:

DEQ AIR QUALITY PROGRAM
1410 N. Hilton, Boise, ID 83706
For assistance, call the
Air Permit Hotline – 1-877-5PERMIT

Baghouse Control Equipment **Form BCE**
Revision 6
2/18/10

Complete this form for each baghouse. Please see instructions on page 2 before filling out the form.

IDENTIFICATION

1. Company Name	2. Facility Name:
Dynamis Energy, LLC	Hidden Hollow WTE Facility

3. Brief Project Description: Municipal solid waste thermal conversion facility located at the Ada County Landfill

BAGHOUSE INFORMATION

4. Baghouse Manufacturer: Donaldson Torit	5. Baghouse Model: DFO 3-24	6. Baghouse Equipment ID: EU-7

7 (a). Baghouse particulate matter emission concentration. **Note: Provide information in 7(a)-(c) or answer question #8 below.**	0.005 gr/dscf	*Manufacturers typically provide guarantees in grains per dry standard cubic foot (gr/dscf). Provide a copy of the guarantee, or other documentation, with the application along with a description of the types of bags that must be used to achieve the emission concentration.* ***Emission concentrations less than 0.01 gr/dscf will receive additional scrutiny by DEQ and a source test of the baghouse may be required.*** *If a guarantee is not provided then you must document how you obtained the emission concentration. Without documentation the application is not complete.*
7 (b). Percentage PM_{10} Or Provide PM_{10} Emission Concentration	_____ % 0.005 gr/dscf	*What percentage of the PM concentration listed in question #7(a) is PM_{10}. You must provide documentation as to how the percentage was determined (i.e per the baghouse manufacturer). Without documentation the application is not complete.*
7 (c). Baghouse flow rate	14,000 dscfm	*Provide the baghouse flow rate in dry standard cubic feet per minute. Actual cubic feet per minute may be given in lieu of dscfm* ***if it is documented*** *that moisture content is insignificant. You must provide documentation as to how this flow rate was determined (i.e. per the exhaust fan manufacturer, combustion evaluation, etc.). Without documentation the application is not complete.*
8. Baghouse particulate matter control efficiency. **Note: Not needed if section #7 is completed.**	_____ % PM control _____ % PM_{10} control	*Applicant's providing the control efficiency of the baghouse must provide control efficiency for both PM and PM_{10}. Provide a copy of the control efficiency documentation with the application. Documentation must include a description of the types of bags that must be used to achieve the control efficiency. Without documentation the application is not complete.*
9. Is the baghouse equipped with a bag leak detector?	☐ Yes ☒ No	*If a bag leak detector is installed provide documentation on the leak detector, including; how the leak detector functions and what level of the output signal indicates that a bag is leaking. Without documentation the application is not complete.*

DEQ AIR QUALITY PROGRAM
1410 N. Hilton, Boise, ID 83706
For assistance, call the
Air Permit Hotline – 1-877-5PERMIT

Scrubber Control Equipment - **Form SCE**
Revision 5
08/28/08

Please see instructions on page 3 before filling out the form.

IDENTIFICATION

1. Company Name:	Dynamis Energy, LLC	2. Facility Name:	Hidden Hollow WTE Facility	3. Facility ID No.:	
4. Brief Project Description:	Municipal solid waste thermal conversion facility located at the Ada County Landfill				

EMISSION UNIT ID				SCRUBBER					
5.	6.	7.	8.	9.	10.	11.	12.	13	14.
Emission Unit	EU ID No.	CE ID No.	Stack ID No.	Manufacturer Name	Model No.	Type	Dimensions In Feet (Ht x Dia x L)	Water Flow (gpm)	Pressure Drop (in H_2O)
Thermal Conversion Unit	EU1	EU8	Stack #1	Direct Contact, LLC	DCI-HTR	Combined Spray Condensation/Packed bed wet scrubber	2 vessels @ 12.5 ft Dia. X 35 ft ht.	6 gpm supply from boiler blowdown. 2 X 450 gpm recirculated/Filtered	12 in WC

DEQ AIR QUALITY PROGRAM
1410 N. Hilton, Boise, ID 83706
For assistance, call the
Air Permit Hotline – 1-877-5PERMIT

AIR PERMIT APPLICATION

Revision 6
10/7/09

For each box in the table below, CTRL+click on the blue underlined text for instructions and information.

IDENTIFICATION	
1. Company Name:	2. Facility Name:
Dynamis Energy, LLC	Hidden Hollow WTE Facility
3. Brief Project Description:	Municipal solid waste thermal conversion facility located at the Ada County Landfill

APPLICABILITY DETERMINATION	
4. List applicable subparts of the New Source Performance Standards (NSPS) (40 CFR part 60). Examples of NSPS affected emissions units include internal combustion engines, boilers, turbines, etc. The applicant must thoroughly review the list of affected emissions units.	List of applicable subpart(s): Subpart Eb ☐ Not Applicable
5. List applicable subpart(s) of the National Emission Standards for Hazardous Air Pollutants (NESHAP) found in 40 CFR part 61 and 40 CFR part 63. Examples of affected emission units include solvent cleaning operations, industrial cooling towers, paint stripping and miscellaneous surface coating. EPA has a web page dedicated to NESHAP that should be useful to applicants.	List of applicable subpart(s): ☑ Not Applicable
6. For each subpart identified above, conduct a complete a regulatory analysis using the instructions and referencing the example provided on the following pages. **Note** - Regulatory reviews must be submitted with sufficient detail so that DEQ can verify applicability and document in legal terms why the regulation applies. Regulatory reviews that are submitted with insufficient detail will be determined incomplete.	☑ A detailed regulatory review is provided (Follow instructions and example). ☐ DEQ has already been provided a detailed regulatory review. Give a reference to the document including the date.

IF YOU ARE UNSURE HOW TO ANSWER ANY OF THESE QUESTIONS, CALL THE AIR PERMIT HOTLINE AT 1-877-5PERMIT

It is emphasized that it is the applicant's responsibility to satisfy all technical and regulatory requirements, and that DEQ will help the applicant understand what those requirements are prior to the application being submitted but that DEQ will not perform the required technical or regulatory analysis on the applicant's behalf.

Subpart Eb Applicability

Text highlighted in gray indicates portion of Subpart Eb that do not apply to the Dynamis facility. Bold text indicates specific limits or sections of Subpart Eb that are/will be applicable to Dynamis. Text in italics is commentary on how each section will apply to Dynamis and/or how Dynamis will comply with the requirements of the section.

Subpart Eb—Standards of Performance for Large Municipal Waste Combustors for Which Construction is Commenced After September 20, 1994 or for Which Modification or Reconstruction is Commenced After June 19, 1996

Source: 60 FR 65419, Dec. 19, 1995, unless otherwise noted.

§ 60.50b Applicability and delegation of authority.

(a) The affected facility to which this subpart applies is each municipal waste combustor unit with a combustion capacity greater than 250 tons per day of municipal solid waste for which construction, modification, or reconstruction is commenced after September 20, 1994.

The Dynamis facility will combust 408 tons per day of municipal solid waste; therefore Subpart Eb applies to this facility.

(b) Any waste combustion unit that is capable of combusting more than 250 tons per day of municipal solid waste and is subject to a federally enforceable permit limiting the maximum amount of municipal solid waste that may be combusted in the unit to less than or equal to 11 tons per day is not subject to this subpart if the owner or operator:

(1) Notifies EPA of an exemption claim;

(2) Provides a copy of the federally enforceable permit that limits the firing of municipal solid waste to less than 11 tons per day; and

(3) Keeps records of the amount of municipal solid waste fired on a daily basis.

(c) An affected facility to which this subpart applies is not subject to subpart E or Ea of this part.

(d) Physical or operational changes made to an existing municipal waste combustor unit primarily for the purpose of complying with emission guidelines under subpart Cb are not considered a modification or reconstruction and do not result in an existing municipal waste combustor unit becoming subject to this subpart.

(e) A qualifying small power production facility, as defined in section 3(17)(C) of the Federal Power Act (16 U.S.C. 796(17)(C)), that burns homogeneous waste (such as automotive tires or used oil, but not including refuse-derived fuel) for the production of electric energy is not subject to this subpart if the owner or operator of the facility notifies EPA of this exemption and provides data documenting that the facility qualifies for this exemption.

(f) A qualifying cogeneration facility, as defined in section 3(18)(B) of the Federal Power Act (16 U.S.C. 796(18)(B)), that burns homogeneous waste (such as automotive tires or used oil, but not including refuse-derived fuel) for the production of electric energy and steam or forms of useful energy (such as heat) that are used for industrial, commercial, heating, or cooling purposes, is not subject to this subpart if the owner or operator of the facility notifies EPA of this exemption and provides data documenting that the facility qualifies for this exemption.

(g) Any unit combusting a single-item waste stream of tires is not subject to this subpart if the owner or operator of the unit:

(1) Notifies EPA of an exemption claim; and

(2) [Reserved]

(3) Provides data documenting that the unit qualifies for this exemption.

(h) Any unit required to have a permit under section 3005 of the Solid Waste Disposal Act is not subject to this subpart.

(i) Any materials recovery facility (including primary or secondary smelters) that combusts waste for the primary purpose of recovering metals is not subject to this subpart.

(j) Any cofired combustor, as defined under §60.51b, that meets the capacity specifications in paragraph (a) of this section is not subject to this subpart if the owner or operator of the cofired combustor:

(1) Notifies EPA of an exemption claim;

(2) Provides a copy of the federally enforceable permit (specified in the definition of cofired combustor in this section); and

(3) Keeps a record on a calendar quarter basis of the weight of municipal solid waste combusted at the cofired combustor and the weight of all other fuels combusted at the cofired combustor.

(k) Air curtain incinerators, as defined under §60.51b, located at a plant that meet the capacity specifications in paragraph (a) of this section and that combust a fuel stream composed of 100 percent yard waste are exempt from all provisions of this subpart except the opacity limit under §60.56b, the testing procedures under §60.58b(l), and the reporting and recordkeeping provisions under §60.59b (e) and (i).

(l) Air curtain incinerators located at plants that meet the capacity specifications in paragraph (a) of this section combusting municipal solid waste other than yard waste are subject to all provisions of this subpart.

(m) Pyrolysis/combustion units that are an integrated part of a plastics/rubber recycling unit (as defined in §60.51b) are not subject to this subpart if the owner or operator of the plastics/rubber recycling unit keeps records of the weight of plastics, rubber, and/or rubber tires processed on a calendar quarter basis; the weight of chemical plant feedstocks and petroleum refinery feedstocks produced and marketed on a calendar quarter basis; and the name and address of the purchaser of the feedstocks. The combustion of gasoline, diesel fuel, jet fuel, fuel oils, residual oil, refinery gas, petroleum coke, liquified petroleum gas, propane, or butane produced by chemical plants or petroleum refineries that use feedstocks produced by plastics/rubber recycling units are not subject to this subpart.

(n) The following authorities are retained by the Administrator of the U.S. EPA and are not transferred to a State:

(1) Approval of exemption claims in paragraphs (b), (e), (f), (g) and (j) of this section;

(2) Enforceability under Federal law of all Federally enforceable, as defined in §60.51b, limitations and conditions;

(3) Determination of compliance with the siting requirements as specified in §60.57b(a);

(4) Acceptance of relationship between carbon monoxide and oxygen as part of initial and annual performance tests as specified in §60.58b(b)(7);

(5) Approval of other monitoring systems used to obtain emissions data when data is not obtained by CEMS as specified in §60.58b(e)(14), (h)(12), (i)(11), and (n)(14), and (p)(11);

(6) Approval of a site-specific monitoring plan for the continuous emission monitoring system specified in “60.58b(n)(13) and (o) of this section or the continuous automated sampling system specified in §60.58b(p)(10) and (q) of this section;

(7) Approval of major alternatives to test methods;

(8) Approval of major alternatives to monitoring;

(9) Waiver of recordkeeping; and

(10) Performance test and data reduction waivers under “608(b).

(o) This subpart shall become effective June 19, 1996.

(p) Cement kilns firing municipal solid waste are not subject to this subpart.

[60 FR 65419, Dec. 19, 1995, as amended at 62 FR 45120, 45125, Aug. 25, 1997; 71 FR 27335, May 10, 2006]

§ 60.51b Definitions.

Administrator means:

(1) For approved and effective State Section 111(d)/129 plans, the Director of the State air pollution control agency, or employee of the State air pollution control agency that is delegated the authority to perform the specified task;

(2) For Federal Section 111(d)/129 plans, the Administrator of the EPA, an employee of the EPA, the Director of the State air pollution control agency, or employee of the State air pollution control agency to whom the authority has been delegated by the Administrator of the EPA to perform the specified task; and

(3) For NSPS, the Administrator of the EPA, an employee of the EPA, the Director of the State air pollution control agency, or employee of the State air pollution control agency to whom the authority has been delegated by the Administrator of the EPA to perform the specified task.

Air curtain incinerator means an incinerator that operates by forcefully projecting a curtain of air across an open chamber or pit in which burning occurs. Incinerators of this type can be constructed above or below ground and with or without refractory walls and floor.

Batch municipal waste combustor means a municipal waste combustor unit designed so that it cannot combust municipal solid waste continuously 24 hours per day because the design does not allow waste to be fed to the unit or ash to be removed while combustion is occurring.

Bubbling fluidized bed combustor means a fluidized bed combustor in which the majority of the bed material remains in a fluidized state in the primary combustion zone.

Calendar quarter means a consecutive 3-month period (nonoverlapping) beginning on January 1, April 1, July 1, and October 1.

Calendar year means the period including 365 days starting January 1 and ending on December 31.

Chief facility operator means the person in direct charge and control of the operation of a municipal waste combustor and who is responsible for daily onsite supervision, technical direction, management, and overall performance of the facility.

Circulating fluidized bed combustor means a fluidized bed combustor in which the majority of the fluidized bed material is carried out of the primary combustion zone and is transported back to the primary zone through a recirculation loop.

Clean wood means untreated wood or untreated wood products including clean untreated lumber, tree stumps (whole or chipped), and tree limbs (whole or chipped). Clean wood does not include yard waste, which is defined elsewhere in this section, or construction, renovation, and demolition wastes (including but not limited to railroad ties and telephone poles), which are exempt from the definition of municipal solid waste in this section.

Cofired combustor means a unit combusting municipal solid waste with nonmunicipal solid waste fuel (e.g., coal, industrial process waste) and subject to a federally enforceable permit limiting the unit to combusting a fuel feed

stream, 30 percent or less of the weight of which is comprised, in aggregate, of municipal solid waste as measured on a calendar quarter basis.

Continuous automated sampling system means the total equipment and procedures for automated sample collection and sample recovery/analysis to determine a pollutant concentration or emission rate by collecting a single or multiple integrated sample(s) of the pollutant (or diluent gas) for subsequent on-or off-site analysis; integrated sample(s) collected are representative of the emissions for the sample time as specified by the applicable requirement.

Continuous emission monitoring system means a monitoring system for continuously measuring the emissions of a pollutant from an affected facility.

Dioxin/furan means tetra- through octa- chlorinated dibenzo-p-dioxins and dibenzofurans.

EPA means the Administrator of the U.S. EPA or employee of the U.S. EPA who is delegated to perform the specified task.

Federally enforceable means all limitations and conditions that are enforceable by EPA including the requirements of 40 CFR part 60, 40 CFR part 61, and 40 CFR part 63, requirements within any applicable State implementation plan, and any permit requirements established under 40 CFR 52.21 or under 40 CFR 51.18 and 40 CFR 51.24.

First calendar half means the period starting on January 1 and ending on June 30 in any year.

Four-hour block average or *4-hour block average* means the average of all hourly emission concentrations when the affected facility is operating and combusting municipal solid waste measured over 4-hour periods of time from 12:00 midnight to 4 a.m., 4 a.m. to 8 a.m., 8 a.m. to 12:00 noon, 12:00 noon to 4 p.m., 4 p.m. to 8 p.m., and 8 p.m. to 12:00 midnight.

Mass burn refractory municipal waste combustor means a field-erected combustor that combusts municipal solid waste in a refractory wall furnace. Unless otherwise specified, this includes combustors with a cylindrical rotary refractory wall furnace.

Mass burn rotary waterwall municipal waste combustor means a field-erected combustor that combusts municipal solid waste in a cylindrical rotary waterwall furnace or on a tumbling-tile grate.

Mass burn waterwall municipal waste combustor means a field-erected combustor that combusts municipal solid waste in a waterwall furnace.

Materials separation plan means a plan that identifies both a goal and an approach to separate certain components of municipal solid waste for a given service area in order to make the separated materials available for recycling. A materials separation plan may include elements such as dropoff facilities, buy-back or deposit-return incentives, curbside pickup programs, or centralized mechanical separation systems. A materials separation plan may include different goals or approaches for different subareas in the service area, and may include no materials separation activities for certain subareas or, if warranted, an entire service area.

Maximum demonstrated municipal waste combustor unit load means the highest 4-hour arithmetic average municipal waste combustor unit load achieved during four consecutive hours during the most recent dioxin/furan performance test demonstrating compliance with the applicable limit for municipal waste combustor organics specified under §60.52b(c).

Maximum demonstrated particulate matter control device temperature means the highest 4-hour arithmetic average flue gas temperature measured at the particulate matter control device inlet during four consecutive hours during the most recent dioxin/furan performance test demonstrating compliance with the applicable limit for municipal waste combustor organics specified under §60.52b(c).

Modification or *modified municipal waste combustor unit* means a municipal waste combustor unit to which changes have been made after June 19, 1996 if the cumulative cost of the changes, over the life of the unit, exceed 50 percent of the original cost of construction and installation of the unit (not including the cost of any land purchased in

connection with such construction or installation) updated to current costs; or any physical change in the municipal waste combustor unit or change in the method of operation of the municipal waste combustor unit increases the amount of any air pollutant emitted by the unit for which standards have been established under section 129 or section 111. Increases in the amount of any air pollutant emitted by the municipal waste combustor unit are determined at 100-percent physical load capability and downstream of all air pollution control devices, with no consideration given for load restrictions based on permits or other nonphysical operational restrictions.

Modular excess-air municipal waste combustor means a combustor that combusts municipal solid waste and that is not field-erected and has multiple combustion chambers, all of which are designed to operate at conditions with combustion air amounts in excess of theoretical air requirements.

Modular starved-air municipal waste combustor means a combustor that combusts municipal solid waste and that is not field-erected and has multiple combustion chambers in which the primary combustion chamber is designed to operate at substoichiometric conditions.

Municipal solid waste or *municipal-type solid waste* or *MSW* means household, commercial/retail, and/or institutional waste. Household waste includes material discarded by single and multiple residential dwellings, hotels, motels, and other similar permanent or temporary housing establishments or facilities. Commercial/retail waste includes material discarded by stores, offices, restaurants, warehouses, nonmanufacturing activities at industrial facilities, and other similar establishments or facilities. Institutional waste includes material discarded by schools, nonmedical waste discarded by hospitals, material discarded by nonmanufacturing activities at prisons and government facilities, and material discarded by other similar establishments or facilities. Household, commercial/retail, and institutional waste does not include used oil; sewage sludge; wood pallets; construction, renovation, and demolition wastes (which includes but is not limited to railroad ties and telephone poles); clean wood; industrial process or manufacturing wastes; medical waste; or motor vehicles (including motor vehicle parts or vehicle fluff). Household, commercial/retail, and institutional wastes include:

(1) Yard waste;

(2) Refuse-derived fuel; and

(3) Motor vehicle maintenance materials limited to vehicle batteries and tires except as specified in §60.50b(g).

Municipal waste combustor, MWC, or *municipal waste combustor unit:* (1) Means any setting or equipment that combusts solid, liquid, or gasified municipal solid waste including, but not limited to, field-erected incinerators (with or without heat recovery), modular incinerators (starved-air or excess-air), boilers (i.e., steam generating units), furnaces (whether suspension-fired, grate-fired, mass-fired, air curtain incinerators, or fluidized bed-fired), and pyrolysis/combustion units. Municipal waste combustors do not include pyrolysis/combustion units located at a plastics/rubber recycling unit (as specified in §60.50b(m)). Municipal waste combustors do not include cement kilns firing municipal solid waste (as specified in §60.50b(p)). Municipal waste combustors do not include internal combustion engines, gas turbines, or other combustion devices that combust landfill gases collected by landfill gas collection systems.

(2) The boundaries of a municipal solid waste combustor are defined as follows. The municipal waste combustor unit includes, but is not limited to, the municipal solid waste fuel feed system, grate system, flue gas system, bottom ash system, and the combustor water system. The municipal waste combustor boundary starts at the municipal solid waste pit or hopper and extends through:

(i) The combustor flue gas system, which ends immediately following the heat recovery equipment or, if there is no heat recovery equipment, immediately following the combustion chamber,

(ii) The combustor bottom ash system, which ends at the truck loading station or similar ash handling equipment that transfer the ash to final disposal, including all ash handling systems that are connected to the bottom ash handling system; and

(iii) The combustor water system, which starts at the feed water pump and ends at the piping exiting the steam drum or superheater.

(3) The municipal waste combustor unit does not include air pollution control equipment, the stack, water treatment equipment, or the turbine-generator set.

Municipal waste combustor acid gases means all acid gases emitted in the exhaust gases from municipal waste combustor units including, but not limited to, sulfur dioxide and hydrogen chloride gases.

Municipal waste combustor metals means metals and metal compounds emitted in the exhaust gases from municipal waste combustor units.

Municipal waste combustor organics means organic compounds emitted in the exhaust gases from municipal waste combustor units and includes tetra-through octa- chlorinated dibenzo-p-dioxins and dibenzofurans.

Municipal waste combustor plant means one or more affected facilities (as defined in §60.50b) at the same location.

Municipal waste combustor unit capacity means the maximum charging rate of a municipal waste combustor unit expressed in tons per day of municipal solid waste combusted, calculated according to the procedures under §60.58b(j). Section 60.58b(j) includes procedures for determining municipal waste combustor unit capacity for continuous and batch feed municipal waste combustors.

Municipal waste combustor unit load means the steam load of the municipal waste combustor unit measured as specified in §60.58b(i)(6).

Particulate matter means total particulate matter emitted from municipal waste combustor units as measured by EPA Reference Method 5 (see §60.58b(c)).

Plastics/rubber recycling unit means an integrated processing unit where plastics, rubber, and/or rubber tires are the only feed materials (incidental contaminants may be included in the feed materials) and they are processed into a chemical plant feedstock or petroleum refinery feedstock, where the feedstock is marketed to and used by a chemical plant or petroleum refinery as input feedstock. The combined weight of the chemical plant feedstock and petroleum refinery feedstock produced by the plastics/rubber recycling unit on a calendar quarter basis shall be more than 70 percent of the combined weight of the plastics, rubber, and rubber tires processed by the plastics/rubber recycling unit on a calendar quarter basis. The plastics, rubber, and/or rubber tire feed materials to the plastics/rubber recycling unit may originate from the separation or diversion of plastics, rubber, or rubber tires from MSW or industrial solid waste, and may include manufacturing scraps, trimmings, and off-specification plastics, rubber, and rubber tire discards. The plastics, rubber, and rubber tire feed materials to the plastics/rubber recycling unit may contain incidental contaminants (e.g., paper labels on plastic bottles, metal rings on plastic bottle caps, etc.).

Potential hydrogen chloride emission concentration means the hydrogen chloride emission concentration that would occur from combustion of municipal solid waste in the absence of any emission controls for municipal waste combustor acid gases.

Potential mercury emission concentration means the mercury emission concentration that would occur from combustion of municipal solid waste in the absence of any mercury emissions control.

Potential sulfur dioxide emissions means the sulfur dioxide emission concentration that would occur from combustion of municipal solid waste in the absence of any emission controls for municipal waste combustor acid gases.

Pulverized coal/refuse-derived fuel mixed fuel-fired combustor means a combustor that fires coal and refuse-derived fuel simultaneously, in which pulverized coal is introduced into an air stream that carries the coal to the combustion chamber of the unit where it is fired in suspension. This includes both conventional pulverized coal and micropulverized coal.

Pyrolysis/combustion unit means a unit that produces gases, liquids, or solids through the heating of municipal solid waste, and the gases, liquids, or solids produced are combusted and emissions vented to the atmosphere.

Reconstruction means rebuilding a municipal waste combustor unit for which the reconstruction commenced after June 19, 1996, and the cumulative costs of the construction over the life of the unit exceed 50 percent of the original

cost of construction and installation of the unit (not including any cost of land purchased in connection with such construction or installation) updated to current costs (current dollars).

Refractory unit or *refractory wall furnace* means a combustion unit having no energy recovery (e.g., via a waterwall) in the furnace (i.e., radiant heat transfer section) of the combustor.

Refuse-derived fuel means a type of municipal solid waste produced by processing municipal solid waste through shredding and size classification. This includes all classes of refuse-derived fuel including low-density fluff refuse-derived fuel through densified refuse-derived fuel and pelletized refuse-derived fuel.

Refuse-derived fuel stoker means a steam generating unit that combusts refuse-derived fuel in a semisuspension firing mode using air-fed distributors.

Same location means the same or contiguous property that is under common ownership or control including properties that are separated only by a street, road, highway, or other public right-of-way. Common ownership or control includes properties that are owned, leased, or operated by the same entity, parent entity, subsidiary, subdivision, or any combination thereof including any municipality or other governmental unit, or any quasi-governmental authority (e.g., a public utility district or regional waste disposal authority).

Second calendar half means the period starting July 1 and ending on December 31 in any year.

Shift supervisor means the person who is in direct charge and control of the operation of a municipal waste combustor and who is responsible for onsite supervision, technical direction, management, and overall performance of the facility during an assigned shift.

Spreader stoker coal/refuse-derived fuel mixed fuel-fired combustor means a combustor that fires coal and refuse-derived fuel simultaneously, in which coal is introduced to the combustion zone by a mechanism that throws the fuel onto a grate from above. Combustion takes place both in suspension and on the grate.

Standard conditions means a temperature of 20 °C and a pressure of 101.3 kilopascals.

Total mass dioxin/furan or *total mass* means the total mass of tetra- through octa- chlorinated dibenzo-p-dioxins and dibenzofurans, as determined using EPA Reference Method 23 and the procedures specified under §60.58b(g).

Tumbling-tile means a grate tile hinged at one end and attached to a ram at the other end. When the ram extends, the grate tile rotates around the hinged end.

Twenty-four hour daily average or *24-hour daily average* means either the arithmetic mean or geometric mean (as specified) of all hourly emission concentrations when the affected facility is operating and combusting municipal solid waste measured over a 24-hour period between 12:00 midnight and the following midnight.

Untreated lumber means wood or wood products that have been cut or shaped and include wet, air-dried, and kiln-dried wood products. Untreated lumber does not include wood products that have been painted, pigment-stained, or “pressure-treated.” Pressure-treating compounds include, but are not limited to, chromate copper arsenate, pentachlorophenol, and creosote.

Waterwall furnace means a combustion unit having energy (heat) recovery in the furnace (i.e., radiant heat transfer section) of the combustor.

Yard waste means grass, grass clippings, bushes, shrubs, and clippings from bushes and shrubs that are generated by residential, commercial/retail, institutional, and/or industrial sources as part of maintenance activities associated with yards or other private or public lands. Yard waste does not include construction, renovation, and demolition wastes, which are exempt from the definition of municipal solid waste in this section. Yard waste does not include clean wood, which is exempt from the definition of municipal solid waste in this section.

[60 FR 65419, Dec. 19, 1995, as amended at 62 FR 45121, 45126, Aug. 25, 1997; 66 FR 36476, July 12, 2001; 71 FR 27335, May 10, 2006]

§ 60.52b Standards for municipal waste combustor metals, acid gases, organics, and nitrogen oxides.

(a) The limits for municipal waste combustor metals are specified in paragraphs (a)(1) through (a)(5) of this section.

> ***(From Subpart A, 60.8)*** In general, within 60 days after achieving the maximum production rate at which the affected facility will be operated, but not later than 180 days after initial startup of such facility, or at such other times specified by Part 60.8, and at such other times as may be required by the Administrator under section 114 of the Act, the owner or operator of such facility shall conduct performance test(s) and furnish the Administrator a written report of the results of such performance test(s).
>
> ***Dynamis will conduct an initial performance test of the thermal conversion unit system within 60 days after achieving maximum production rate, but not later than 180 days after initial startup, to determine compliance with 60.52b(a), and will meet the requirements associated with this part for affected facilities that commenced construction after December 19, 2005 as listed below.***

(1) On and after the date on which the initial performance test is completed or is required to be completed under §60.8 of subpart A of this part, no owner or operator of an affected facility shall cause to be discharged into the atmosphere from that affected facility any gases that contain **particulate matter** in excess of the limits specified in paragraph (a)(1)(i) or (a)(1)(ii) of this section.

(i) For affected facilities that commenced construction, modification, or reconstruction after September 20, 1994, and on or before December 19, 2005, the emission limit is 24 milligrams per dry standard cubic meter, corrected to 7 percent oxygen.

(ii) For affected facilities that commenced construction, modification, or reconstruction after December 19, 2005, the emission limit is **20 milligrams per dry standard cubic meter, corrected to 7 percent oxygen**.

(2) On and after the date on which the initial performance test is completed or is required to be completed under §60.8 of subpart A of this part, no owner or operator of an affected facility shall cause to be discharged into the atmosphere from that affected facility any gases that exhibit greater than **10 percent opacity (6-minute average).**

(3) On and after the date on which the initial performance test is completed or is required to be completed under §60.8 of subpart A of this part, no owner or operator of an affected facility shall cause to be discharged into the atmosphere from that affected facility any gases that contain **cadmium** in excess of the limits specified in paragraph (a)(3)(i) or (a)(3)(ii) of this section.

(i) For affected facilities that commenced construction, modification, or reconstruction after September 20, 1994, and on or before December 19, 2005, the emission limit is 20 micrograms per dry standard cubic meter, corrected to 7 percent oxygen.

(ii) For affected facilities that commenced construction, modification, or reconstruction after December 19, 2005, the emission limit is **10 micrograms per dry standard cubic meter, corrected to 7 percent oxygen**.

(4) On and after the date on which the initial performance test is completed or is required to be completed under §60.8 of subpart A of this part, no owner or operator of an affected facility shall cause to be discharged into the atmosphere from the affected facility any gases that contain **lead** in excess of the limits specified in paragraph (a)(4)(i) or (a)(4)(ii) of this section.

(i) For affected facilities that commenced construction, modification, or reconstruction after September 20, 1994, and on or before December 19, 2005, the emission limit is 200 micrograms per dry standard cubic meter, corrected to 7 percent oxygen.

(ii) For affected facilities that commenced construction, modification, or reconstruction after December 19, 2005, the emission limit is **140 micrograms per dry standard cubic meter, corrected to 7 percent oxygen.**

(5) On and after the date on which the initial performance test is completed or is required to be completed under §60.8 of subpart A of this part, no owner or operator of an affected facility shall cause to be discharged into the atmosphere from the affected facility any gases that contain **mercury** in excess of the limits specified in paragraph (a)(5)(i) or (a)(5)(ii) of this section.

(i) For affected facilities that commenced construction, modification, or reconstruction after September 20, 1994 and on or before December 19, 2005, the emission limit is 80 micrograms per dry standard cubic meter or 15 percent of the potential mercury emission concentration (85-percent reduction by weight), corrected to 7 percent oxygen, whichever is less stringent.

(ii) For affected facilities that commenced construction, modification, or reconstruction after December 19, 2005, the emission limit is 50 **micrograms per dry standard cubic meter, or 15 percent of the potential mercury emission concentration (85-percent reduction by weight), corrected to 7 percent oxygen, whichever is less stringent.**

(b) The limits for municipal waste combustor acid gases are specified in paragraphs (b)(1) and (b)(2) of this section.

(1) On and after the date on which the initial performance test is completed or is required to be completed under §60.8 of subpart A of this part, no owner or operator of an affected facility shall cause to be discharged into the atmosphere from that affected facility any gases that contain **sulfur dioxide in excess of 30 parts per million by volume or 20 percent of the potential sulfur dioxide emission concentration (80-percent reduction by weight or volume), corrected to 7 percent oxygen (dry basis), whichever is less stringent. The averaging time is specified under §60.58b(e).**

(2) On and after the date on which the initial performance test is completed or is required to be completed under §60.8 of subpart A of this part, no owner or operator of an affected facility shall cause to be discharged into the atmosphere from that affected facility any gases that contain **hydrogen chloride in excess of 25 parts per million by volume or 5 percent of the potential hydrogen chloride emission concentration (95-percent reduction by weight or volume), corrected to 7 percent oxygen (dry basis), whichever is less stringent.**

(c) The limits for municipal waste combustor organics are specified in paragraphs (c)(1) and (c)(2) of this section.

(1) On and after the date on which the initial performance test is completed or is required to be completed under §60.8 of subpart A of this part, no owner or operator of an affected facility for which construction, modification or reconstruction commences on or before November 20, 1997 shall cause to be discharged into the atmosphere from that affected facility any gases that contain dioxin/furan emissions that exceed 30 nanograms per dry standard cubic meter (total mass), corrected to 7 percent oxygen, for the first 3 years following the date of initial startup. After the first 3 years following the date of initial startup, no owner or operator shall cause to be discharged into the atmosphere from that affected facility any gases that contain dioxin/furan total mass emissions that exceed 13 nanograms per dry standard cubic meter (total mass), corrected to 7 percent oxygen.

(2) On and after the date on which the initial performance test is completed or is required to be completed under §60.8 of subpart A of this part, no owner or operator of an affected facility for which construction, modification, or reconstruction commences after November 20, 1997 shall cause to be discharged into the atmosphere from that affected facility any gases that contain **dioxin/furan total mass emissions that exceed 13 nanograms per dry standard cubic meter (total mass), corrected to 7 percent oxygen.**

(d) The limits for nitrogen oxides are specified in paragraphs (d)(1) and (d)(2) of this section.

(1) **During the first year of operation after the date on which the initial performance test is completed** or is required to be completed under §60.8 of subpart A of this part, no owner or operator of an affected facility shall cause to be discharged into the atmosphere from that affected facility any gases that contain **nitrogen oxides in excess of 180 parts per million by volume, corrected to 7 percent oxygen (dry basis). The averaging time is specified under §60.58b(h).**

(2) **After the first year of operation following the date on which the initial performance test is completed** or is required to be completed under §60.8 of subpart A of this part, no owner or operator of an affected facility shall cause to be discharged into the atmosphere from that affected facility any gases that **contain nitrogen oxides in excess of**

150 parts per million by volume, corrected to 7 percent oxygen (dry basis). The averaging time is specified under §60.58b(h).

[60 FR 65419, Dec. 19, 1995, as amended at 62 FR 45121, 45126, Aug. 25, 1997; 71 FR 27336, May 10, 2006]

§ 60.53b Standards for municipal waste combustor operating practices.

Dynamis will comply with load level requirements and emission limits specified under this section, and will comply with the particulate matter control device requirements listed under this section.

(a) On and after the date on which the initial performance test is completed or is required to be completed under §60.8 of subpart A of this part, no owner or operator of an affected facility shall cause to be discharged into the atmosphere from that affected facility any gases that contain carbon monoxide in excess of the emission limits specified in table 1 of this subpart.

Table 1—Municipal Waste Combustor Operating Standards

Municipal waste combustor technology	Carbon monoxide emission limit (parts per million by volume)[a]	Averaging time (hours)[b]
Mass burn waterwall	100	4
Mass burn refractory	100	4
Mass burn rotary waterwall	100	24
Modular starved air	**50**	**4**
Modular excess air	50	4
Refuse-derived fuel stoker	150	24
Bubbling fluidized bed combustor	100	4
Circulating fluidized bed combustor	100	4
Pulverized coal/refuse-derived fuel mixed fuel-fired combustor	150	4
Spreader stoker coal/refuse-derived fuel mixed fuel-fired combustor	150	24

[a]Measured at the combustor outlet in conjunction with a measurement of oxygen concentration, corrected to 7 percent oxygen (dry basis). The averaging times are specified in greater detail in §60.58b(i).

[b]Averaging times are 4-hour or 24-hour block averages.

(b) No owner or operator of an affected facility shall cause such facility to operate at a load level greater than 110 percent of the maximum demonstrated municipal waste combustor unit load as defined in §60.51b, except as specified in paragraphs (b)(1) and (b)(2) of this section. The averaging time is specified under §60.58b(i).

(1) During the annual dioxin/furan or mercury performance test and the 2 weeks preceding the annual dioxin/furan or mercury performance test, no municipal waste combustor unit load limit is applicable if the provisions of paragraph (b)(2) of this section are met.

(2) The municipal waste combustor unit load limit may be waived in writing by the Administrator for the purpose of evaluating system performance, testing new technology or control technologies, diagnostic testing, or related activities for the purpose of improving facility performance or advancing the state-of-the-art for controlling facility emissions. The municipal waste combustor unit load limit continues to apply, and remains enforceable, until and unless the Administrator grants the waiver.

(c) No owner or operator of an affected facility shall cause such facility to operate at a temperature, measured at the particulate matter control device inlet, exceeding 17 °C above the maximum demonstrated particulate matter control device temperature as defined in §60.51b, except as specified in paragraphs (c)(1) and (c)(2) of this section. The averaging time is specified under §60.58b(i). The requirements specified in this paragraph apply to each particulate matter control device utilized at the affected facility.

(1) During the annual dioxin/furan or mercury performance test and the 2 weeks preceding the annual dioxin/furan or mercury performance test, no particulate matter control device temperature limitations are applicable if the provisions of paragraph (b)(2) of this section are met.

(2) The particulate matter control device temperature limits may be waived in writing by the Administrator for the purpose of evaluating system performance, testing new technology or control technologies, diagnostic testing, or related activities for the purpose of improving facility performance or advancing the state-of-the-art for controlling facility emissions. The temperature limits continue to apply, and remain enforceable, until and unless the Administrator grants the waiver.

(d) Paragraph (m)(2) of §60.58b addresses treatment of activated carbon injection rate during dioxin/furan or mercury testing.

[60 FR 65419, Dec. 19, 1995, as amended at 62 FR 45126, Aug. 25, 1997; 71 FR 27336, May 10, 2006]

§ 60.54b Standards for municipal waste combustor operator training and certification.

Dynamis will ensure that all operator training and certification requirements and operating requirements listed under this section are complied with through documentation and recordkeeping as required under Subpart Eb and by making the operating manual and training certifications and documentations available to EPA or its delegated enforcement agency upon request.

(a) No later than the date 6 months after the date of startup of an affected facility or on December 19, 1996, whichever is later, each chief facility operator and shift supervisor shall obtain and maintain a current provisional operator certification from either the American Society of Mechanical Engineers [QRO–1–1994 (incorporated by reference—see §60.17 of subpart A of this part)] or a State certification program.

(b) Not later than the date 6 months after the date of startup of an affected facility or on December 19, 1996, whichever is later, each chief facility operator and shift supervisor shall have completed full certification or shall have scheduled a full certification exam with either the American Society of Mechanical Engineers [QRO–1–1994 (incorporated by reference—see §60.17 of subpart A of this part)] or a State certification program.

(c) No owner or operator of an affected facility shall allow the facility to be operated at any time unless one of the following persons is on duty and at the affected facility: A fully certified chief facility operator, a provisionally certified chief facility operator who is scheduled to take the full certification exam according to the schedule specified in paragraph (b) of this section, a fully certified shift supervisor, or a provisionally certified shift supervisor who is scheduled to take the full certification exam according to the schedule specified in paragraph (b) of this section.

(1) The requirement specified in paragraph (c) of this section shall take effect 6 months after the date of startup of the affected facility or on December 19, 1996, whichever is later.

(2) If both the certified chief facility operator and certified shift supervisor are unavailable, a provisionally certified control room operator on site at the municipal waste combustion unit may fulfill the certified operator requirement.

Depending on the length of time that a certified chief facility operator and certified shift supervisor are away, the owner or operator of the affected facility must meet one of three criteria:

(i) When the certified chief facility operator and certified shift supervisor are both off site for 12 hours or less, and no other certified operator is on site, the provisionally certified control room operator may perform the duties of the certified chief facility operator or certified shift supervisor.

(ii) When the certified chief facility operator and certified shift supervisor are off site for more than 12 hours, but for two weeks or less, and no other certified operator is on site, the provisionally certified control room operator may perform the duties of the certified chief facility operator or certified shift supervisor without notice to, or approval by, the Administrator. However, the owner or operator of the affected facility must record the period when the certified chief facility operator and certified shift supervisor are off site and include that information in the annual report as specified under §60.59b(g)(5).

(iii) When the certified chief facility operator and certified shift supervisor are off site for more than two weeks, and no other certified operator is on site, the provisionally certified control room operator may perform the duties of the certified chief facility operator or certified shift supervisor without approval by the Administrator. However, the owner or operator of the affected facility must take two actions:

(A) Notify the Administrator in writing. In the notice, state what caused the absence and what actions are being taken by the owner or operator of the facility to ensure that a certified chief facility operator or certified shift supervisor is on site as expeditiously as practicable.

(B) Submit a status report and corrective action summary to the Administrator every four weeks following the initial notification. If the Administrator provides notice that the status report or corrective action summary is disapproved, the municipal waste combustion unit may continue operation for 90 days, but then must cease operation. If corrective actions are taken in the 90-day period such that the Administrator withdraws the disapproval, municipal waste combustion unit operation may continue.

(3) A provisionally certified operator who is newly promoted or recently transferred to a shift supervisor position or a chief facility operator position at the municipal waste combustion unit may perform the duties of the certified chief facility operator or certified shift supervisor without notice to, or approval by, the Administrator for up to six months before taking the ASME QRO certification exam.

(d) All chief facility operators, shift supervisors, and control room operators at affected facilities must complete the EPA or State municipal waste combustor operator training course no later than the date 6 months after the date of startup of the affected facility or by December 19, 1996, whichever is later.

(e) The owner or operator of an affected facility shall develop and update on a yearly basis a site-specific operating manual that shall, at a minimum, address the elements of municipal waste combustor unit operation specified in paragraphs (e)(1) through (e)(11) of this section.

(1) A summary of the applicable standards under this subpart;

(2) A description of basic combustion theory applicable to a municipal waste combustor unit;

(3) Procedures for receiving, handling, and feeding municipal solid waste;

(4) Municipal waste combustor unit startup, shutdown, and malfunction procedures;

(5) Procedures for maintaining proper combustion air supply levels;

(6) Procedures for operating the municipal waste combustor unit within the standards established under this subpart;

(7) Procedures for responding to periodic upset or off-specification conditions;

(8) Procedures for minimizing particulate matter carryover;

(9) Procedures for handling ash;

(10) Procedures for monitoring municipal waste combustor unit emissions; and

(11) Reporting and recordkeeping procedures.

(f) The owner or operator of an affected facility shall establish a training program to review the operating manual according to the schedule specified in paragraphs (f)(1) and (f)(2) of this section with each person who has responsibilities affecting the operation of an affected facility including, but not limited to, chief facility operators, shift supervisors, control room operators, ash handlers, maintenance personnel, and crane/load handlers.

(1) Each person specified in paragraph (f) of this section shall undergo initial training no later than the date specified in paragraph (f)(1)(i), (f)(1)(ii), or (f)(1)(iii) of this section whichever is later.

(i) The date 6 months after the date of startup of the affected facility;

(ii) The date prior to the day the person assumes responsibilities affecting municipal waste combustor unit operation; or

(iii) December 19, 1996.

(2) Annually, following the initial review required by paragraph (f)(1) of this section.

(g) The operating manual required by paragraph (e) of this section shall be kept in a readily accessible location for all persons required to undergo training under paragraph (f) of this section. The operating manual and records of training shall be available for inspection by the EPA or its delegated enforcement agency upon request.

[60 FR 65419, Dec. 19, 1995, as amended at 62 FR 45126, Aug. 25, 1997; 71 FR 27337, May 10, 2006]

1.0 § 60.55b Standards for municipal waste combustor fugitive ash emissions.

(a) On and after the date on which the initial performance test is completed or is required to be completed under §60.8 of subpart A of this part, no owner or operator of an affected facility shall cause to be discharged to the atmosphere visible emissions of combustion ash from an ash conveying system (including conveyor transfer points) in excess of 5 percent of the observation period (i.e., 9 minutes per 3-hour period), as determined by EPA Reference Method 22 observations as specified in §60.58b(k), except as provided in paragraphs (b) and (c) of this section.

(b) The emission limit specified in paragraph (a) of this section does not cover visible emissions discharged inside buildings or enclosures of ash conveying systems; however, the emission limit specified in paragraph (a) of this section does cover visible emissions discharged to the atmosphere from buildings or enclosures of ash conveying systems.

(c) The provisions specified in paragraph (a) of this section do not apply during maintenance and repair of ash conveying systems.

[60 FR 65419, Dec. 19, 1995, as amended at 62 FR 45126, Aug. 25, 1997]

§ 60.56b Standards for air curtain incinerators.

On and after the date on which the initial performance test is completed or is required to be completed under §60.8 of subpart A of this part, the owner or operator of an air curtain incinerator with the capacity to combust greater than 250

tons per day of municipal solid waste and that combusts a fuel feed stream composed of 100 percent yard waste and no other municipal solid waste materials shall at no time cause to be discharged into the atmosphere from that incinerator any gases that exhibit greater than 10-percent opacity (6-minute average), except that an opacity level of up to 35 percent (6-minute average) is permitted during startup periods during the first 30 minutes of operation of the unit.

[60 FR 65419, Dec. 19, 1995, as amended at 62 FR 45126, Aug. 25, 1997]

§ 60.57b Siting requirements.

Dynamis has prepared a Material Separation Plan (MSP) as defined in 60.51b, and has complied/will comply with the requirements of paragraphs (a)(1) through (a)(10) as described under each paragraph below.

The Dynamis Preliminary Draft MSP was prepared and submitted to the Boise Public Library and Eagle Public Library on May 27, 2011. The notification of public meeting was published in the Idaho Statesman on May 27, 2011 and included the information required in Subpart Eb. The public meeting was held on June 27, 2011 in Ada County, Idaho. A document summarizing responses to public comments was prepared and made available to the public by placing the response document at the public libraries where the Preliminary Draft MSP was submitted. A copy of the notification of the public meeting, a transcript of the public meeting, the document summarizing responses to public comments, and copies of both the preliminary and final draft materials separation plans will be submitted to the Idaho Department of Environmental Quality as part of the Permit to Construct Application for the facility. A final draft MSP was prepared and submitted to the Boise Public Library and Eagle Public Library on March 6, 2012, along with the Draft Siting Analysis. As part of the public meeting for review of the Siting Analysis, Dynamis addressed any questions concerning the Final Draft MSP. Comments on the Final Draft Materials MSP recieved during the Draft Siting Analysis public meeting will be addressed in the combined Draft Siting Analysis and Final Draft MSP comment response document which is required to be submitted with the Notice of Construction. A Final MSP will be prepared and submitted with the Notice of Construction.

(a) The owner or operator of an affected facility shall prepare a materials separation plan, as defined in §60.51b, for the affected facility and its service area, and shall comply with the requirements specified in paragraphs (a)(1) through (a)(10) of this section. The initial application is defined as representing a good faith submittal as determined by EPA.

(1) The owner or operator shall prepare a preliminary draft materials separation plan and shall make the plan available to the public as specified in paragraphs (a)(1)(i) and (a)(1)(ii) of this section.

(i) The owner or operator shall distribute the preliminary draft materials separation plan to the principal public libraries in the area where the affected facility is to be constructed.

(ii) The owner or operator shall publish a notification of a public meeting in the principal newspaper(s) serving the area where the affected facility is to be constructed and where the waste treated by the affected facility will primarily be collected. As a minimum, the notification shall include the information specified in paragraphs (a)(1)(ii)(A) through (a)(1)(ii)(D) of this section.

(A) The date, time, and location of the public meeting.

(B) The location of the public libraries where the preliminary draft materials separation plan may be found, including normal business hours of the libraries.

(C) An agenda of the issues to be discussed at the public meeting.

(D) The dates that the public comment period on the preliminary draft materials separation plan begins and ends.

(2) The owner or operator shall conduct a public meeting, accept comments on the preliminary draft materials separation plan, and comply with the requirements specified in paragraphs (a)(2)(i) through (a)(2)(iv) of this section.

(i) The public meeting shall be conducted in the county where the affected facility is to be located.

(ii) The public meeting shall be scheduled to occur 30 days or more after making the preliminary draft materials separation plan available to the public as specified under paragraph (a)(1) of this section.

(iii) Suggested issues to be addressed at the public meeting are listed in paragraphs (a)(2)(iii)(A) through (a)(2)(iii)(H) of this section.

(A) The expected size of the service area for the affected facility.

(B) The amount of waste generation anticipated for the service area.

(C) The types and estimated amounts of materials proposed for separation.

(D) The methods proposed for materials separation.

(E) The amount of residual waste to be disposed.

(F) Alternate disposal methods for handling the residual waste.

(G) Identification of the location(s) where responses to public comment on the preliminary draft materials separation plan will be available for inspection, as specified in paragraphs (a)(3) and (a)(4) of this section.

(H) Identification of the locations where the final draft materials separation plan will be available for inspection, as specified in paragraph (a)(7).

(iv) Nothing in this section shall preclude an owner or operator from combining this public meeting with any other public meeting required as part of any other Federal, State, or local permit review process except the public meeting required under paragraph (b)(4) of this section.

(3) Following the public meeting required by paragraph (a)(2) of this section, the owner or operator shall prepare responses to the comments received at the public meeting.

(4) The owner or operator shall make the document summarizing responses to public comments available to the public (including distribution to the principal public libraries used to announce the meeting) in the service area where the affected facility is to be located.

(5) The owner or operator shall prepare a final draft materials separation plan for the affected facility considering the public comments received at the public meeting.

(6) As required under §60.59b(a), the owner or operator shall submit to EPA a copy of the notification of the public meeting, a transcript of the public meeting, the document summarizing responses to public comments, and copies of both the preliminary and final draft materials separation plans on or before the time the facility's application for a construction permit is submitted under 40 CFR part 51, subpart I, or part 52, as applicable.

(7) As part of the distribution of the siting analysis required under paragraph (b)(3) of this section, the owner or operator shall make the final draft materials separation plan required under paragraph (a)(5) of this section available to the public, as specified in paragraph (b)(3) of this section.

(8) As part of the public meeting for review of the siting analysis required under paragraph (b)(4) of this section, the owner or operator shall address questions concerning the final draft materials separation plan required by paragraph (a)(5) of this section including discussion of how the final draft materials separation plan has changed from the preliminary draft materials separation plan that was discussed at the first public meeting required by paragraph (a)(2) of this section.

(9) If the owner or operator receives any comments on the final draft materials separation plan during the public meeting required in paragraph (b)(4) of this section, the owner or operator shall respond to those comments in the document prepared in accordance with paragraph (b)(5) of this section.

(10) The owner or operator shall prepare a final materials separation plan and shall submit, as required under §60.59b(b)(5)(ii), the final materials separation plan as part of the initial notification of construction.

(b) The owner or operator of an affected facility for which the initial application for a construction permit under 40 CFR part 51, subpart I, or part 52, as applicable, is submitted after December 19, 1995 shall prepare a siting analysis in accordance with paragraphs (b)(1) and (b)(2) of this section and shall comply with the requirements specified in paragraphs (b)(3) through (b)(7) of this section.

Dynamis has prepared a Draft Siting Analysis as defined in 60.51b, and has complied/will comply with the requirements of paragraphs (b)(1) through (b)(7) as described under each paragraph below.

The Dynamis Draft Siting Analysis was prepared and submitted to the Boise Public Library and Eagle Public Library on March 6, 2012, along with the Final Draft Materials Separation Plan. The notification of public meeting was published in the Idaho Statesman on March 6, 2012 and included the information specified Subpart Eb. The public meeting was held on April 4, 2012 in Ada County, Idaho. A document summarizing responses to public comments was prepared and made available to the public by placing the response document at the public libraries where the Draft Siting Analysis was submitted. A copy of the notification of the Siting Analysis public meeting, a transcript of the Siting Analysis public meeting, the document summarizing responses to public comments, and the Siting Analysis will be submitted as part of the initial notification of construction.

(1) The siting analysis shall be an analysis of the impact of the affected facility on ambient air quality, visibility, soils, and vegetation.

(2) The analysis shall consider air pollution control alternatives that minimize, on a site-specific basis, to the maximum extent practicable, potential risks to the public health or the environment.

(3) The owner or operator shall make the siting analysis and final draft materials separation plan required by paragraph (a)(5) of this section available to the public as specified in paragraphs (b)(3)(i) and (b)(3)(ii) of this section.

(i) The owner or operator shall distribute the siting analysis and final draft materials separation plan to the principal public libraries in the area where the affected facility is to be constructed.

(ii) The owner or operator shall publish a notification of a public meeting in the principal newspaper(s) serving the area where the affected facility is to be constructed and where the waste treated by the affected facility will primarily be collected. As a minimum, the notification shall include the information specified in paragraphs (b)(3)(ii)(A) through (b)(3)(ii)(D) of this section.

(A) The date, time, and location of the public meeting.

(B) The location of the public libraries where the siting analyses and final draft materials separation plan may be found, including normal business hours.

(C) An agenda of the issues to be discussed at the public meeting.

(D) The dates that the public comment period on the siting analyses and final draft materials separation plan begins and ends.

(4) The owner or operator shall conduct a public meeting and accept comments on the siting analysis and the final draft materials separation plan required under paragraph (a)(5) of this section. The public meeting

shall be conducted in the county where the affected facility is to be located and shall be scheduled to occur 30 days or more after making the siting analysis available to the public as specified under paragraph (b)(3) of this section.

(5) The owner or operator shall prepare responses to the comments on the siting analysis and the final draft materials separation plan that are received at the public meeting.

(6) The owner or operator shall make the document summarizing responses to public comments available to the public (including distribution to all public libraries) in the service area where the affected facility is to be located.

(7) As required under §60.59b(b)(5), the owner or operator shall submit a copy of the notification of the public meeting, a transcript of the public meeting, the document summarizing responses to public comments, and the siting analysis as part of the initial notification of construction.

(c) The owner or operator of an affected facility for which construction is commenced after September 20, 1994 shall prepare a siting analysis in accordance with 40 CFR part 51, subpart I, or part 52, as applicable, and shall submit the siting analysis as part of the initial notification of construction. Affected facilities subject to paragraphs (a) and (b) of this section are not subject to this paragraph.

[60 FR 65419, Dec. 19, 1995, as amended at 62 FR 45126, Aug. 25, 1997; 71 FR 27337, May 10, 2006]

§ 60.58b Compliance and performance testing.

Dynamis will comply with compliance and performance testing requirements listed below by recording and reporting periods of startup, shutdown and malfunction and through by installing, calibrating, maintaining, and operating a continuous emission monitoring system, and monitoring and recording the output of the system. Dynamis will comply with the test procedures and test methods specified in paragraphs (b)(1) through (b)(8) of this section. The procedures and test methods specified in paragraphs (c)(1) through (c)(11) of this section will be used to determine compliance with the emission limits for particulate matter and opacity under §60.52b(a)(1) and (a)(2). The procedures and test methods specified in paragraphs (d)(1) and (d)(2) of this section shall be used to determine compliance with the emission limits for cadmium, lead, and mercury under §60.52b(a). The procedures and test methods specified in paragraphs (e)(1) through (e)(14) of this section shall be used for determining compliance with the sulfur dioxide emission limit under §60.52b(b)(1). The procedures and test methods specified in paragraphs (f)(1) through (f)(8) of this section shall be used for determining compliance with the hydrogen chloride emission limit under §60.52b(b)(2). The procedures and test methods specified in paragraphs (g)(1) through (g)(9) of this section shall be used to determine compliance with the limits for dioxin/furan emissions under §60.52b(c). The procedures and test methods specified in paragraphs (h)(1) through (h)(12) of this section shall be used to determine compliance with the nitrogen oxides emission limit for affected facilities under §60.52b(d). The procedures specified in paragraphs (i)(1) through (i)(12) of this section shall be used for determining compliance with the operating requirements under §60.53b. The procedures specified in paragraphs (j)(1) and (j)(2) of this section shall be used for calculating municipal waste combustor unit capacity as defined under §60.51b. (k) The procedures specified in paragraphs (k)(1) through (k)(4) of this section shall be used for determining compliance with the fugitive ash emission limit under §60.55b.

If Dynamis elects to install, calibrate, maintain, and operate a continuous emission monitoring system for monitoring emissions discharged to the atmosphere and record the output of the system in place of periodic manual testing of mercury, cadmium, lead, or hydrogen chloride with EPA Reference Method 26, 26A, 29, or as an alternative ASTM D6784–02 (as applicable), Dynamis will comply with the requirements of paragraph (n)(1) through (n)(13) and paragraph (o) of this section.

If Dynamis elects to install, calibrate, maintain, and operate a continuous automated sampling system for determining emissions of dioxin/furan or mercury discharged to the atmosphere in place of periodic manual testing of dioxin/furan or mercury with EPA Reference Method 23, 29, or as an alternative ASTM D6784–02 (as applicable), Dynamis will comply with the requirements in paragraphs (p)(1) through (p)(12) and (q) of this section.

Where options or alternative methods exist for compliance and performance testing procedures and methods listed above, determination of the method will be made upon construction of the facility, installation of the continuous monitoring device and/or performance of the stack test. All methods and procedures used during any emissions device installation, monitoring or testing, and any emissions testing conducted will be thoroughly documented in the the reports required under this section.

(a) The provisions for startup, shutdown, and malfunction are provided in paragraphs (a)(1) and (a)(2) of this section.

(1) Except as provided by §60.56b, the standards under this subpart apply at all times except during periods of startup, shutdown, and malfunction. Duration of startup, shutdown, or malfunction periods are limited to 3 hours per occurrence, except as provided in paragraph (a)(1)(iii) of this section. During periods of startup, shutdown, or malfunction, monitoring data shall be dismissed or excluded from compliance calculations, but shall be recorded and reported in accordance with the provisions of 40 CFR 60.59b(d)(7).

(i) The startup period commences when the affected facility begins the continuous burning of municipal solid waste and does not include any warmup period when the affected facility is combusting fossil fuel or other nonmunicipal solid waste fuel, and no municipal solid waste is being fed to the combustor.

(ii) Continuous burning is the continuous, semicontinuous, or batch feeding of municipal solid waste for purposes of waste disposal, energy production, or providing heat to the combustion system in preparation for waste disposal or energy production. The use of municipal solid waste solely to provide thermal protection of the grate or hearth during the startup period when municipal solid waste is not being fed to the grate is not considered to be continuous burning.

(iii) For the purpose of compliance with the carbon monoxide emission limits in §60.53b(a), if a loss of boiler water level control (*e.g.,* boiler waterwall tube failure) or a loss of combustion air control (*e.g.,* loss of combustion air fan, induced draft fan, combustion grate bar failure) is determined to be a malfunction, the duration of the malfunction period is limited to 15 hours per occurrence. During such periods of malfunction, monitoring data shall be dismissed or excluded from compliance calculations, but shall be recorded and reported in accordance with the provisions of §60.59b(d)(7).

(2) The opacity limits for air curtain incinerators specified in §60.56b apply at all times as specified under §60.56b except during periods of malfunction. Duration of malfunction periods are limited to 3 hours per occurrence.

(b) The owner or operator of an affected facility shall install, calibrate, maintain, and operate a continuous emission monitoring system for measuring the oxygen or carbon dioxide content of the flue gas at each location where carbon monoxide, sulfur dioxide, nitrogen oxides emissions, or particulate matter (if the owner or operator elects to continuously monitor emissions under paragraph (n) of this section) are monitored and record the output of the system and shall comply with the test procedures and test methods specified in paragraphs (b)(1) through (b)(8) of this section.

(1) The span value of the oxygen (or 20 percent carbon dioxide) monitor shall be 25 percent oxygen (or 20 percent carbon dioxide).

(2) The monitor shall be installed, evaluated, and operated in accordance with §60.13 of subpart A of this part.

(3) The initial performance evaluation shall be completed no later than 180 days after the date of initial startup of the affected facility, as specified under §60.8 of subpart A of this part.

(4) The monitor shall conform to Performance Specification 3 in appendix B of this part except for section 2.3 (relative accuracy requirement).

(5) The quality assurance procedures of appendix F of this part except for section 5.1.1 (relative accuracy test audit) shall apply to the monitor.

(6) If carbon dioxide is selected for use in diluent corrections, the relationship between oxygen and carbon dioxide levels shall be established during the initial performance test according to the procedures and methods specified in paragraphs (b)(6)(i) through (b)(6)(iv) of this section. This relationship may be reestablished during performance compliance tests.

(i) The fuel factor equation in Method 3B shall be used to determine the relationship between oxygen and carbon dioxide at a sampling location. Method 3, 3A, or 3B, or as an alternative ASME PTC–19–10–1981—part10, as applicable, shall be used to determine the oxygen concentration at the same location as the carbon dioxide monitor.

(ii) Samples shall be taken for at least 30 minutes in each hour.

(iii) Each sample shall represent a 1-hour average.

(iv) A minimum of three runs shall be performed.

(7) The relationship between carbon dioxide and oxygen concentrations that is established in accordance with paragraph (b)(6) of this section shall be submitted to EPA as part of the initial performance test report and, if applicable, as part of the annual test report if the relationship is reestablished during the annual performance test.

(8) During a loss of boiler water level control or loss of combustion air control malfunction period as specified in paragraph (a)(1)(iii) of this section, a diluent cap of 14 percent for oxygen or 5 percent for carbon dioxide may be used in the emissions calculations for sulfur dioxide and nitrogen oxides.

(c) Except as provided in paragraph (c)(10) of this section, the procedures and test methods specified in paragraphs (c)(1) through (c)(11) of this section shall be used to determine compliance with the emission limits for particulate matter and opacity under §60.52b(a)(1) and (a)(2).

(1) The EPA Reference Method 1 shall be used to select sampling site and number of traverse points.

(2) The EPA Reference Method 3, 3A or 3B, or as an alternative ASME PTC–19–10–1981—part10, as applicable, shall be used for gas analysis.

(3) EPA Reference Method 5 shall be used for determining compliance with the particulate matter emission limit. The minimum sample volume shall be 1.7 cubic meters. The probe and filter holder heating systems in the sample train shall be set to provide a gas temperature no greater than 160 °C. An oxygen or carbon dioxide measurement shall be obtained simultaneously with each Method 5 run.

(4) The owner or operator of an affected facility may request that compliance with the particulate matter emission limit be determined using carbon dioxide measurements corrected to an equivalent of 7 percent oxygen. The relationship between oxygen and carbon dioxide levels for the affected facility shall be established as specified in paragraph (b)(6) of this section.

(5) As specified under §60.8 of subpart A of this part, all performance tests shall consist of three test runs. The average of the particulate matter emission concentrations from the three test runs is used to determine compliance.

(6) In accordance with paragraphs (c)(7) and (c)(11) of this section, EPA Reference Method 9 shall be used for determining compliance with the opacity limit except as provided under §60.11(e) of subpart A of this part.

(7) The owner or operator of an affected facility shall conduct an initial performance test for particulate matter emissions and opacity as required under §60.8 of subpart A of this part.

(8) The owner or operator of an affected facility shall install, calibrate, maintain, and operate a continuous opacity monitoring system for measuring opacity and shall follow the methods and procedures specified in paragraphs (c)(8)(i) through (c)(8)(iv) of this section.

(i) The output of the continuous opacity monitoring system shall be recorded on a 6-minute average basis.

(ii) The continuous opacity monitoring system shall be installed, evaluated, and operated in accordance with §60.13 of subpart A of this part.

(iii) The continuous opacity monitoring system shall conform to Performance Specification 1 in appendix B of this part.

(iv) The initial performance evaluation shall be completed no later than 180 days after the date of the initial startup of the municipal waste combustor unit, as specified under §60.8 of subpart A of this part.

(9) Following the date that the initial performance test for particulate matter is completed or is required to be completed under §60.8 of subpart A of this part for an affected facility, the owner or operator shall conduct a performance test for particulate matter on a calendar year basis (no less than 9 calendar months and no more than 15 calendar months following the previous performance test; and must complete five performance tests in each 5-year calendar period).

(10) In place of particulate matter testing with EPA Reference Method 5, an owner or operator may elect to install, calibrate, maintain, and operate a continuous emission monitoring system for monitoring particulate matter emissions discharged to the atmosphere and record the output of the system. The owner or operator of an affected facility who elects to continuously monitor particulate matter emissions instead of conducting performance testing using EPA Method 5 shall install, calibrate, maintain, and operate a continuous emission monitoring system and shall comply with the requirements specified in paragraphs (c)(10)(i) through (c)(10)(xiv) of this section. The owner or operator who elects to continuously monitor particulate matter emissions instead of conducting performance testing using EPA Method 5 is not required to complete performance testing for particulate matter as specified in paragraph (c)(9) of this section and is not required to continuously monitor opacity as specified in paragraph (c)(8) of this section.

(i) Notify the Administrator one month before starting use of the system.

(ii) Notify the Administrator one month before stopping use of the system.

(iii) The monitor shall be installed, evaluated, and operated in accordance with §60.13 of subpart A of this part.

(iv) The initial performance evaluation shall be completed no later than 180 days after the date of initial startup of the affected facility, as specified under §60.8 of subpart A of this part or within 180 days of notification to the Administrator of use of the continuous monitoring system if the owner or operator was previously determining compliance by Method 5 performance tests, whichever is later.

(v) The owner or operator of an affected facility may request that compliance with the particulate matter emission limit be determined using carbon dioxide measurements corrected to an equivalent of 7 percent oxygen. The relationship between oxygen and carbon dioxide levels for the affected facility shall be established as specified in paragraph (b)(6) of this section.

(vi) The owner or operator of an affected facility shall conduct an initial performance test for particulate matter emissions as required under §60.8 of subpart A of this part. Compliance with the particulate matter emission limit shall be determined by using the continuous emission monitoring system specified in paragraph (c)(10) of this section to measure particulate matter and calculating a 24-hour block arithmetic average emission concentration using EPA Reference Method 19, section 12.4.1.

(vii) Compliance with the particulate matter emission limit shall be determined based on the 24-hour daily (block) average of the hourly arithmetic average emission concentrations using continuous emission monitoring system outlet data.

(viii) After April 28, 2008, at a minimum, valid continuous monitoring system hourly averages shall be obtained as specified in paragraphs (c)(10)(viii)(A) and (c)(10)(viii)(B) for at least 90 percent of the operating hours per calendar quarter and 95 percent of the operating hours per calendar year that the affected facility is combusting municipal solid waste.

(A) At least two data points per hour shall be used to calculate each 1-hour arithmetic average.

(B) Each particulate matter 1-hour arithmetic average shall be corrected to 7 percent oxygen on an hourly basis using the 1-hour arithmetic average of the oxygen (or carbon dioxide) continuous emission monitoring system data.

(ix) The 1-hour arithmetic averages required under paragraph (c)(10)(vii) of this section shall be expressed in milligrams per dry standard cubic meter corrected to 7 percent oxygen (dry basis) and shall be used to calculate the 24-hour daily arithmetic average emission concentrations. The 1-hour arithmetic averages shall be calculated using the data points required under §60.13(e)(2) of subpart A of this part.

(x) All valid continuous emission monitoring system data shall be used in calculating average emission concentrations even if the minimum continuous emission monitoring system data requirements of paragraph (c)(10)(viii) of this section are not met.

(xi) The continuous emission monitoring system shall be operated according to Performance Specification 11 in appendix B of this part.

(xii) During each relative accuracy test run of the continuous emission monitoring system required by Performance Specification 11 in appendix B of this part, particulate matter and oxygen (or carbon dioxide) data shall be collected concurrently (or within a 30- to 60-minute period) by both the continuous emission monitors and the test methods specified in paragraphs (c)(10)(xii)(A) and (c)(10)(xii)(B) of this section.

(A) For particulate matter, EPA Reference Method 5 shall be used.

(B) For oxygen (or carbon dioxide), EPA Reference Method 3, 3A, or 3B, as applicable shall be used.

(xiii) Quarterly accuracy determinations and daily calibration drift tests shall be performed in accordance with procedure 2 in appendix F of this part.

(xiv) When particulate matter emissions data are not obtained because of continuous emission monitoring system breakdowns, repairs, calibration checks, and zero and span adjustments, emissions data shall be obtained by using other monitoring systems as approved by the Administrator or EPA Reference Method 19 to provide, as necessary, valid emissions data for a minimum of 90 percent of the hours per calendar quarter and 95 percent of the hours per calendar year that the affected facility is operated and combusting municipal solid waste.

(11) Following the date that the initial performance test for opacity is completed or is required to be completed under §60.8 of subpart A of this part for an affected facility, the owner or operator shall conduct a performance test for opacity on an annual basis (no less than 9 calendar months and no more than 15 calendar months following the previous performance test; and must complete five performance tests in each 5-year calendar period) using the test method specified in paragraph (c)(6) of this section.

(d) The procedures and test methods specified in paragraphs (d)(1) and (d)(2) of this section shall be used to determine compliance with the emission limits for cadmium, lead, and mercury under §60.52b(a).

(1) The procedures and test methods specified in paragraphs (d)(1)(i) through (d)(1)(ix) of this section shall be used to determine compliance with the emission limits for cadmium and lead under §60.52b(a) (3) and (4).

(i) The EPA Reference Method 1 shall be used for determining the location and number of sampling points.

(ii) The EPA Reference Method 3, 3A, or 3B, or as an alternative ASME PTC–19–10–1981—part10, as applicable, shall be used for flue gas analysis.

(iii) The EPA Reference Method 29 shall be used for determining compliance with the cadmium and lead emission limits.

(iv) An oxygen or carbon dioxide measurement shall be obtained simultaneously with each Method 29 test run for cadmium and lead required under paragraph (d)(1)(iii) of this section.

(v) The owner or operator of an affected facility may request that compliance with the cadmium or lead emission limit be determined using carbon dioxide measurements corrected to an equivalent of 7 percent oxygen. The relationship between oxygen and carbon dioxide levels for the affected facility shall be established as specified in paragraph (b)(6) of this section.

(vi) All performance tests shall consist of a minimum of three test runs conducted under representative full load operating conditions. The average of the cadmium or lead emission concentrations from three test runs or more shall be used to determine compliance.

(vii) Following the date of the initial performance test or the date on which the initial performance test is required to be completed under §60.8 of subpart A of this part, the owner or operator of an affected facility shall conduct a performance test for compliance with the emission limits for cadmium and lead on a calendar year basis (no less than 9 calendar months and no more than 15 calendar months following the previous performance test; and must complete five performance tests in each 5-year calendar period).

(viii)–(ix) [Reserved]

(2) The procedures and test methods specified in paragraphs (d)(2)(i) through (d)(2)(xi) of this section shall be used to determine compliance with the mercury emission limit under §60.52b(a)(5).

(i) The EPA Reference Method 1 shall be used for determining the location and number of sampling points.

(ii) The EPA Reference Method 3, 3A, or 3B, or as an alternative ASME PTC–19–10–1981—part10, as applicable, shall be used for flue gas analysis.

(iii) The EPA Reference Method 29 or as an alternative ASTM D6784–02 shall be used to determine the mercury emission concentration. The minimum sample volume when using Method 29 as an alternative ASTM D6784–02 for mercury shall be 1.7 cubic meters.

(iv) An oxygen (or carbon dioxide) measurement shall be obtained simultaneously with each Method 29 or as an alternative ASTM D6784–02 test run for mercury required under paragraph (d)(2)(iii) of this section.

(v) The percent reduction in the potential mercury emissions (%PHg) is computed using equation 1:

$$\left(\%P_{Hg}\right) = \left(\frac{E_i - E_o}{E_i}\right) \times 100 \qquad (1)$$

where:

$\%P_{Hg}$= percent reduction of the potential mercury emissions achieved.

E_i= potential mercury emission concentration measured at the control device inlet, corrected to 7 percent oxygen (dry basis).

E_o= controlled mercury emission concentration measured at the mercury control device outlet, corrected to 7 percent oxygen (dry basis).

(vi) All performance tests shall consist of a minimum of three test runs conducted under representative full load operating conditions. The average of the mercury emission concentrations or percent reductions from three test runs or more is used to determine compliance.

(vii) The owner or operator of an affected facility may request that compliance with the mercury emission limit be determined using carbon dioxide measurements corrected to an equivalent of 7 percent oxygen. The relationship between oxygen and carbon dioxide levels for the affected facility shall be established as specified in paragraph (b)(6) of this section.

(viii) The owner or operator of an affected facility shall conduct an initial performance test for mercury emissions as required under §60.8 of subpart A of this part.

(ix) Following the date that the initial performance test for mercury is completed or is required to be completed under §60.8 of subpart A of this part, the owner or operator of an affected facility shall conduct a performance test for mercury emissions on a calendar year basis (no less than 9 calendar months and no more than 15 calendar months from the previous performance test; and must complete five performance tests in each 5-year calendar period).

(x) [Reserved]

(xi) The owner or operator of an affected facility where activated carbon injection is used to comply with the mercury emission limit shall follow the procedures specified in paragraph (m) of this section for measuring and calculating carbon usage.

(3) In place of cadmium and lead testing with EPA Reference Method 29 as an alternative ASTM D6784–02, an owner or operator may elect to install, calibrate, maintain, and operate a continuous emission monitoring system for monitoring cadmium and lead emissions discharged to the atmosphere and record the output of the system according to the provisions of paragraphs (n) and (o) of this section.

(4) In place of mercury testing with EPA Reference Method 29 or as an alternative ASTM D6784–02, an owner or operator may elect to install, calibrate, maintain, and operate a continuous emission monitoring system or a continuous automated sampling system for monitoring mercury emissions discharged to the atmosphere and record the output of the system according to the provisions of paragraphs (n) and (o) of this section, or paragraphs (p) and (q) of this section, as appropriate. The owner or operator who elects to continuously monitor mercury in place of mercury testing with EPA Reference Method 29 or as an alternative ASTM D6784–02 is not required to complete performance testing for mercury as specified in paragraph (d)(2)(ix) of this section.

(e) The procedures and test methods specified in paragraphs (e)(1) through (e)(14) of this section shall be used for determining compliance with the sulfur dioxide emission limit under §60.52b(b)(1).

(1) The EPA Reference Method 19, section 4.3, shall be used to calculate the daily geometric average sulfur dioxide emission concentration.

(2) The EPA Reference Method 19, section 5.4, shall be used to determine the daily geometric average percent reduction in the potential sulfur dioxide emission concentration.

(3) The owner or operator of an affected facility may request that compliance with the sulfur dioxide emission limit be determined using carbon dioxide measurements corrected to an equivalent of 7 percent oxygen. The relationship between oxygen and carbon dioxide levels for the affected facility shall be established as specified in paragraph (b)(6) of this section.

(4) The owner or operator of an affected facility shall conduct an initial performance test for sulfur dioxide emissions as required under §60.8 of subpart A of this part. Compliance with the sulfur dioxide emission limit (concentration or percent reduction) shall be determined by using the continuous emission monitoring system specified in paragraph (e)(5) of this section to measure sulfur dioxide and calculating a 24-hour daily geometric average emission concentration or a 24-hour daily geometric average percent reduction using EPA Reference Method 19, sections 4.3 and 5.4, as applicable.

(5) The owner or operator of an affected facility shall install, calibrate, maintain, and operate a continuous emission monitoring system for measuring sulfur dioxide emissions discharged to the atmosphere and record the output of the system.

(6) Following the date that the initial performance test for sulfur dioxide is completed or is required to be completed under §60.8 of subpart A of this part, compliance with the sulfur dioxide emission limit shall be determined based on the 24-hour daily geometric average of the hourly arithmetic average emission concentrations using continuous emission monitoring system outlet data if compliance is based on an emission concentration, or continuous emission monitoring system inlet and outlet data if compliance is based on a percent reduction.

(7) At a minimum, valid continuous monitoring system hourly averages shall be obtained as specified in paragraphs (e)(7)(i) and (e)(7)(ii) for 90 percent of the operating hours per calendar quarter and 95 percent of the operating days per calendar year that the affected facility is combusting municipal solid waste.

(i) At least two data points per hour shall be used to calculate each 1-hour arithmetic average.

(ii) Each sulfur dioxide 1-hour arithmetic average shall be corrected to 7 percent oxygen on an hourly basis using the 1-hour arithmetic average of the oxygen (or carbon dioxide) continuous emission monitoring system data.

(8) The 1-hour arithmetic averages required under paragraph (e)(6) of this section shall be expressed in parts per million corrected to 7 percent oxygen (dry basis) and used to calculate the 24-hour daily geometric average emission concentrations and daily geometric average emission percent reductions. The 1-hour arithmetic averages shall be calculated using the data points required under §60.13(e)(2) of subpart A of this part.

(9) All valid continuous emission monitoring system data shall be used in calculating average emission concentrations and percent reductions even if the minimum continuous emission monitoring system data requirements of paragraph (e)(7) of this section are not met.

(10) The procedures under §60.13 of subpart A of this part shall be followed for installation, evaluation, and operation of the continuous emission monitoring system.

(11) The initial performance evaluation shall be completed no later than 180 days after the date of initial startup of the municipal waste combustor as specified under §60.8 of subpart A of this part.

(12) The continuous emission monitoring system shall be operated according to Performance Specification 2 in appendix B of this part. For sources that have actual inlet emissions less than 100 parts per million dry volume, the relative accuracy criterion for inlet sulfur dioxide continuous emission monitoring systems should be no greater than 20 percent of the mean value of the reference method test data in terms of the units of the emission standard, or 5 parts per million dry volume absolute value of the mean difference between the reference method and the continuous emission monitoring systems, whichever is greater.

(i) During each relative accuracy test run of the continuous emission monitoring system required by Performance Specification 2 in appendix B of this part, sulfur dioxide and oxygen (or carbon dioxide) data shall be collected concurrently (or within a 30- to 60-minute period) by both the continuous emission monitors and the test methods specified in paragraphs (e)(12)(i)(A) and (e)(12)(i)(B) of this section.

(A) For sulfur dioxide, EPA Reference Method 6, 6A, or 6C, or as an alternative ASME PTC–19–10–1981—part10, shall be used.

(B) For oxygen (or carbon dioxide), EPA Reference Method 3, 3A, or 3B, or as an alternative ASME PTC–19–10–1981—part10, as applicable, shall be used.

(ii) The span value of the continuous emissions monitoring system at the inlet to the sulfur dioxide control device shall be 125 percent of the maximum estimated hourly potential sulfur dioxide emissions of the municipal waste combustor unit. The span value of the continuous emission monitoring system at the outlet of the sulfur dioxide control device shall be 50 percent of the maximum estimated hourly potential sulfur dioxide emissions of the municipal waste combustor unit.

(13) Quarterly accuracy determinations and daily calibration drift tests shall be performed in accordance with procedure 1 in appendix F of this part.

(14) When sulfur dioxide emissions data are not obtained because of continuous emission monitoring system breakdowns, repairs, calibration checks, and/or zero and span adjustments, emissions data shall be obtained by using other monitoring systems as approved by EPA or EPA Reference Method 19 to provide, as necessary, valid emissions data for a minimum of 90 percent of the hours per calendar quarter and 95 percent of the hours per calendar year that the affected facility is operated and combusting municipal solid waste.

(f) The procedures and test methods specified in paragraphs (f)(1) through (f)(8) of this section shall be used for determining compliance with the hydrogen chloride emission limit under §60.52b(b)(2).

(1) The EPA Reference Method 26 or 26A, as applicable, shall be used to determine the hydrogen chloride emission concentration. The minimum sampling time shall be 1 hour.

(2) An oxygen (or carbon dioxide) measurement shall be obtained simultaneously with each test run for hydrogen chloride required by paragraph (f)(1) of this section.

(3) The percent reduction in potential hydrogen chloride emissions (% P_{HCl}) is computed using equation 2:

$$(\%P_{HCl}) = \left(\frac{E_i - E_o}{E_i}\right) \times 100 \qquad (2)$$

where:

$\%P_{HCl}$=percent reduction of the potential hydrogen chloride emissions achieved.

E_i=potential hydrogen chloride emission concentration measured at the control device inlet, corrected to 7 percent oxygen (dry basis).

E_o=controlled hydrogen chloride emission concentration measured at the control device outlet, corrected to 7 percent oxygen (dry basis).

(4) The owner or operator of an affected facility may request that compliance with the hydrogen chloride emission limit be determined using carbon dioxide measurements corrected to an equivalent of 7 percent oxygen. The relationship between oxygen and carbon dioxide levels for the affected facility shall be established as specified in paragraph (b)(6) of this section.

(5) As specified under §60.8 of subpart A of this part, all performance tests shall consist of three test runs. The average of the hydrogen chloride emission concentrations or percent reductions from the three test runs is used to determine compliance.

(6) The owner or operator of an affected facility shall conduct an initial performance test for hydrogen chloride as required under §60.8 of subpart A of this part.

(7) Following the date that the initial performance test for hydrogen chloride is completed or is required to be completed under §60.8 of subpart A of this part, the owner or operator of an affected facility shall conduct a performance test for hydrogen chloride emissions on an annual basis (no more than 12 calendar months following the previous performance test).

(8) In place of hydrogen chloride testing with EPA Reference Method 26 or 26A, an owner or operator may elect to install, calibrate, maintain, and operate a continuous emission monitoring system for monitoring hydrogen chloride emissions discharged to the atmosphere and record the output of the system according to the provisions of paragraphs (n) and (o) of this section.

(g) The procedures and test methods specified in paragraphs (g)(1) through (g)(9) of this section shall be used to determine compliance with the limits for dioxin/furan emissions under §60.52b(c).

(1) The EPA Reference Method 1 shall be used for determining the location and number of sampling points.

(2) The EPA Reference Method 3, 3A, or 3B, or as an alternative ASME PTC–19–10–1981—part10, as applicable, shall be used for flue gas analysis.

(3) The EPA Reference Method 23 shall be used for determining the dioxin/furan emission concentration.

(i) The minimum sample time shall be 4 hours per test run.

(ii) An oxygen (or carbon dioxide) measurement shall be obtained simultaneously with each Method 23 test run for dioxins/furans.

(4) The owner or operator of an affected facility shall conduct an initial performance test for dioxin/furan emissions in accordance with paragraph (g)(3) of this section, as required under §60.8 of subpart A of this part.

(5) Following the date that the initial performance test for dioxins/furans is completed or is required to be completed under §60.8 of subpart A of this part, the owner or operator of an affected facility shall conduct performance tests for dioxin/furan emissions in accordance with paragraph (g)(3) of this section, according to one of the schedules specified in paragraphs (g)(5)(i) through (g)(5)(iii) of this section.

(i) For affected facilities, performance tests shall be conducted on a calendar year basis (no less than 9 calendar months and no more than 15 calendar months following the previous performance test; and must complete five performance tests in each 5-year calendar period).

(ii) For the purpose of evaluating system performance to establish new operating parameter levels, testing new technology or control technologies, diagnostic testing, or related activities for the purpose of improving facility performance or advancing the state-of-the-art for controlling facility emissions, the owner or operator of an affected facility that qualifies for the performance testing schedule specified in paragraph (g)(5)(iii) of this section, may test one unit for dioxin/furan and apply the dioxin/furan operating parameters to similarly designed and equipped units on site by meeting the requirements specified in paragraphs (g)(5)(ii)(A) through (g)(5)(ii)(D) of this section.

(A) Follow the testing schedule established in paragraph (g)(5)(iii) of this section. For example, each year a different affected facility at the municipal waste combustor plant shall be tested, and the affected facilities at the plant shall be tested in sequence (*e.g.* , unit 1, unit 2, unit 3, as applicable).

(B) Upon meeting the requirements in paragraph (g)(5)(iii) of this section for one affected facility, the owner or operator may elect to apply the average carbon mass feed rate and associated carbon injection system operating parameter levels for dioxin/furan as established in paragraph (m) of this section to similarly designed and equipped units on site.

(C) Upon testing each subsequent unit in accordance with the testing schedule established in paragraph (g)(5)(iii) of this section, the dioxin/furan and mercury emissions of the subsequent unit shall not exceed the dioxin/furan and mercury emissions measured in the most recent test of that unit prior to the revised operating parameter levels.

(D) The owner or operator of an affected facility that selects to follow the performance testing schedule specified in paragraph (g)(5)(iii) of this section and apply the carbon injection system operating parameters to similarly designed and equipped units on site shall follow the procedures specified in §60.59b(g)(4) for reporting.

(iii) Where all performance tests over a 2-year period indicate that dioxin/furan emissions are less than or equal to 7 nanograms per dry standard cubic meter (total mass) for all affected facilities located within a municipal waste combustor plant, the owner or operator of the municipal waste combustor plant may elect to conduct annual performance tests for one affected facility (i.e., unit) per year at the municipal waste combustor plant. At a minimum, a performance test for dioxin/furan emissions shall be conducted on a calendar year basis (no less than 9 calendar months and no more than 15 months following the previous performance test; and must complete five performance

tests in each 5-year calendar period) for one affected facility at the municipal waste combustor plant. Each year a different affected facility at the municipal waste combustor plant shall be tested, and the affected facilities at the plant shall be tested in sequence (*e.g.* , unit 1, unit 2, unit 3, as applicable). If each annual performance test continues to indicate a dioxin/furan emission level less than or equal to 7 nanograms per dry standard cubic meter (total mass), the owner or operator may continue conducting a performance test on only one affected facility per calendar year. If any annual performance test indicates either a dioxin/furan emission level greater than 7 nanograms per dry standard cubic meter (total mass), performance tests shall thereafter be conducted annually on all affected facilities at the plant until and unless all annual performance tests for all affected facilities at the plant over a 2-year period indicate a dioxin/furan emission level less than or equal to 7 nanograms per dry standard cubic meter (total mass).

(6) The owner or operator of an affected facility that selects to follow the performance testing schedule specified in paragraph (g)(5)(iii) of this section shall follow the procedures specified in §60.59b(g)(4) for reporting the selection of this schedule.

(7) The owner or operator of an affected facility where activated carbon is used shall follow the procedures specified in paragraph (m) of this section for measuring and calculating the carbon usage rate.

(8) The owner or operator of an affected facility may request that compliance with the dioxin/furan emission limit be determined using carbon dioxide measurements corrected to an equivalent of 7 percent oxygen. The relationship between oxygen and carbon dioxide levels for the affected facility shall be established as specified in paragraph (b)(6) of this section.

(9) As specified under §60.8 of subpart A of this part, all performance tests shall consist of three test runs. The average of the dioxin/furan emission concentrations from the three test runs is used to determine compliance.

(10) In place of dioxin/furan sampling and testing with EPA Reference Method 23, an owner or operator may elect to sample dioxin/furan by installing, calibrating, maintaining, and operating a continuous automated sampling system for monitoring dioxin/furan emissions discharged to the atmosphere, recording the output of the system, and analyzing the sample using EPA Method 23. This option to use a continuous automated sampling system takes effect on the date a final performance specification applicable to dioxin/furan from monitors is published in theFederal Registeror the date of approval of a site-specific monitoring plan. The owner or operator of an affected facility who elects to continuously sample dioxin/furan emissions instead of sampling and testing using EPA Method 23 shall install, calibrate, maintain, and operate a continuous automated sampling system and shall comply with the requirements specified in paragraphs (p) and (q) of this section.

(h) The procedures and test methods specified in paragraphs (h)(1) through (h)(12) of this section shall be used to determine compliance with the nitrogen oxides emission limit for affected facilities under §60.52b(d).

(1) The EPA Reference Method 19, section 4.1, shall be used for determining the daily arithmetic average nitrogen oxides emission concentration.

(2) The owner or operator of an affected facility may request that compliance with the nitrogen oxides emission limit be determined using carbon dioxide measurements corrected to an equivalent of 7 percent oxygen. The relationship between oxygen and carbon dioxide levels for the affected facility shall be established as specified in paragraph (b)(6) of this section.

(3) The owner or operator of an affected facility subject to the nitrogen oxides limit under §60.52b(d) shall conduct an initial performance test for nitrogen oxides as required under §60.8 of subpart A of this part. Compliance with the nitrogen oxides emission limit shall be determined by using the continuous emission monitoring system specified in paragraph (h)(4) of this section for measuring nitrogen oxides and calculating a 24-hour daily arithmetic average emission concentration using EPA Reference Method 19, section 4.1.

(4) The owner or operator of an affected facility subject to the nitrogen oxides emission limit under §60.52b(d) shall install, calibrate, maintain, and operate a continuous emission monitoring system for measuring nitrogen oxides discharged to the atmosphere, and record the output of the system.

(5) Following the date that the initial performance test for nitrogen oxides is completed or is required to be completed under §60.8 of subpart A of this part, compliance with the emission limit for nitrogen oxides required under §60.52b(d)

shall be determined based on the 24-hour daily arithmetic average of the hourly emission concentrations using continuous emission monitoring system outlet data.

(6) At a minimum, valid continuous emission monitoring system hourly averages shall be obtained as specified in paragraphs (h)(6)(i) and (h)(6)(ii) of this section for 90 percent of the operating hours per calendar quarter and for 95 percent of the operating hours per calendar year that the affected facility is combusting municipal solid waste.

(i) At least 2 data points per hour shall be used to calculate each 1-hour arithmetic average.

(ii) Each nitrogen oxides 1-hour arithmetic average shall be corrected to 7 percent oxygen on an hourly basis using the 1-hour arithmetic average of the oxygen (or carbon dioxide) continuous emission monitoring system data.

(7) The 1-hour arithmetic averages required by paragraph (h)(5) of this section shall be expressed in parts per million by volume (dry basis) and used to calculate the 24-hour daily arithmetic average concentrations. The 1-hour arithmetic averages shall be calculated using the data points required under §60.13(e)(2) of subpart A of this part.

(8) All valid continuous emission monitoring system data must be used in calculating emission averages even if the minimum continuous emission monitoring system data requirements of paragraph (h)(6) of this section are not met.

(9) The procedures under §60.13 of subpart A of this part shall be followed for installation, evaluation, and operation of the continuous emission monitoring system. The initial performance evaluation shall be completed no later than 180 days after the date of initial startup of the municipal waste combustor unit, as specified under §60.8 of subpart A of this part.

(10) The owner or operator of an affected facility shall operate the continuous emission monitoring system according to Performance Specification 2 in appendix B of this part and shall follow the procedures and methods specified in paragraphs (h)(10)(i) and (h)(10)(ii) of this section.

(i) During each relative accuracy test run of the continuous emission monitoring system required by Performance Specification 2 of appendix B of this part, nitrogen oxides and oxygen (or carbon dioxide) data shall be collected concurrently (or within a 30- to 60-minute period) by both the continuous emission monitors and the test methods specified in paragraphs (h)(10)(i)(A) and (h)(10)(i)(B) of this section.

(A) For nitrogen oxides, EPA Reference Method 7, 7A, 7C, 7D, or 7E shall be used.

(B) For oxygen (or carbon dioxide), EPA Reference Method 3, 3A, or 3B, or as an alternative ASME PTC–19–10–1981—part10, as applicable, shall be used.

(ii) The span value of the continuous emission monitoring system shall be 125 percent of the maximum estimated hourly potential nitrogen oxide emissions of the municipal waste combustor unit.

(11) Quarterly accuracy determinations and daily calibration drift tests shall be performed in accordance with procedure 1 in appendix F of this part.

(12) When nitrogen oxides continuous emission data are not obtained because of continuous emission monitoring system breakdowns, repairs, calibration checks, and zero and span adjustments, emissions data shall be obtained using other monitoring systems as approved by EPA or EPA Reference Method 19 to provide, as necessary, valid emissions data for a minimum of 90 percent of the hours per calendar quarter and 95 percent of the hours per calendar year the unit is operated and combusting municipal solid waste.

(i) The procedures specified in paragraphs (i)(1) through (i)(12) of this section shall be used for determining compliance with the operating requirements under §60.53b.

(1) Compliance with the carbon monoxide emission limits in §60.53b(a) shall be determined using a 4-hour block arithmetic average for all types of affected facilities except mass burn rotary waterwall municipal waste combustors and refuse-derived fuel stokers.

(2) For affected mass burn rotary waterwall municipal waste combustors and refuse-derived fuel stokers, compliance with the carbon monoxide emission limits in §60.53b(a) shall be determined using a 24-hour daily arithmetic average.

(3) The owner or operator of an affected facility shall install, calibrate, maintain, and operate a continuous emission monitoring system for measuring carbon monoxide at the combustor outlet and record the output of the system and shall follow the procedures and methods specified in paragraphs (i)(3)(i) through (i)(3)(iii) of this section.

(i) The continuous emission monitoring system shall be operated according to Performance Specification 4A in appendix B of this part.

(ii) During each relative accuracy test run of the continuous emission monitoring system required by Performance Specification 4A in appendix B of this part, carbon monoxide and oxygen (or carbon dioxide) data shall be collected concurrently (or within a 30- to 60-minute period) by both the continuous emission monitors and the test methods specified in paragraphs (i)(3)(ii)(A) and (i)(3)(ii)(B) of this section. For affected facilities subject to the 100 parts per million dry volume carbon monoxide standard, the relative accuracy criterion of 5 parts per million dry volume is calculated as the absolute value of the mean difference between the reference method and continuous emission monitoring systems.

(A) For carbon monoxide, EPA Reference Method 10, 10A, or 10B shall be used.

(B) For oxygen (or carbon dioxide), EPA Reference Method 3, 3A, or 3B, or ASME PTC–19–10–1981—part10 (incorporated by reference, see §60.17 of subpart A of this part), as applicable, shall be used.

(iii) The span value of the continuous emission monitoring system shall be 125 percent of the maximum estimated hourly potential carbon monoxide emissions of the municipal waste combustor unit.

(4) The 4-hour block and 24-hour daily arithmetic averages specified in paragraphs (i)(1) and (i)(2) of this section shall be calculated from 1-hour arithmetic averages expressed in parts per million by volume corrected to 7 percent oxygen (dry basis). The 1-hour arithmetic averages shall be calculated using the data points generated by the continuous emission monitoring system. At least two data points shall be used to calculate each 1-hour arithmetic average.

(5) The owner or operator of an affected facility may request that compliance with the carbon monoxide emission limit be determined using carbon dioxide measurements corrected to an equivalent of 7 percent oxygen. The relationship between oxygen and carbon dioxide levels for the affected facility shall be established as specified in paragraph (b)(6) of this section.

(6) The procedures specified in paragraphs (i)(6)(i) through (i)(6)(v) of this section shall be used to determine compliance with load level requirements under §60.53b(b).

(i) The owner or operator of an affected facility with steam generation capability shall install, calibrate, maintain, and operate a steam flow meter or a feedwater flow meter; measure steam (or feedwater) flow in kilograms per hour (or pounds per hour) on a continuous basis; and record the output of the monitor. Steam (or feedwater) flow shall be calculated in 4-hour block arithmetic averages.

(ii) The method included in the “American Society of Mechanical Engineers Power Test Codes: Test Code for Steam Generating Units, Power Test Code 4.1—1964 (R1991)” section 4 (incorporated by reference, see §60.17 of subpart A of this part) shall be used for calculating the steam (or feedwater) flow required under paragraph (i)(6)(i) of this section. The recommendations in “American Society of Mechanical Engineers Interim Supplement 19.5 on Instruments and Apparatus: Application, partII of Fluid Meters, 6th edition (1971),” chapter 4 (incorporated by reference—see §60.17 of subpart A of this part) shall be followed for design, construction, installation, calibration, and use of nozzles and orifices except as specified in (i)(6)(iii) of this section.

(iii) Measurement devices such as flow nozzles and orifices are not required to be recalibrated after they are installed.

(iv) All signal conversion elements associated with steam (or feedwater flow) measurements must be calibrated according to the manufacturer's instructions before each dioxin/furan performance test, and at least once per year.

(7) To determine compliance with the maximum particulate matter control device temperature requirements under §60.53b(c), the owner or operator of an affected facility shall install, calibrate, maintain, and operate a device for measuring on a continuous basis the temperature of the flue gas stream at the inlet to each particulate matter control device utilized by the affected facility. Temperature shall be calculated in 4-hour block arithmetic averages.

(8) The maximum demonstrated municipal waste combustor unit load shall be determined during the initial performance test for dioxins/furans and each subsequent performance test during which compliance with the dioxin/furan emission limit specified in §60.52b(c) is achieved. The maximum demonstrated municipal waste combustor unit load shall be the highest 4-hour arithmetic average load achieved during four consecutive hours during the most recent test during which compliance with the dioxin/furan emission limit was achieved. If a subsequent dioxin/furan performance test is being performed on only one affected facility at the MWC plant, as provided in paragraph (g)(5)(iii) of this section, the owner or operator may elect to apply the same maximum municipal waste combustor unit load from the tested facility for all the similarly designed and operated affected facilities at the MWC plant.

(9) For each particulate matter control device employed at the affected facility, the maximum demonstrated particulate matter control device temperature shall be determined during the initial performance test for dioxins/furans and each subsequent performance test during which compliance with the dioxin/furan emission limit specified in §60.52b(c) is achieved. The maximum demonstrated particulate matter control device temperature shall be the highest 4-hour arithmetic average temperature achieved at the particulate matter control device inlet during four consecutive hours during the most recent test during which compliance with the dioxin/furan limit was achieved. If a subsequent dioxin/furan performance test is being performed on only one affected facility at the MWC plant, as provided in paragraph (g)(5)(iii) of this section, the owner or operator may elect to apply the same maximum particulate matter control device temperature from the tested facility for all the similarly designed and operated affected facilities at the MWC plant.

(10) At a minimum, valid continuous emission monitoring system hourly averages shall be obtained as specified in paragraphs (i)(10)(i) and (i)(10)(ii) of this section for at least 90 percent of the operating hours per calendar quarter and 95 percent of the operating hours per calendar year that the affected facility is combusting municipal solid waste.

(i) At least two data points per hour shall be used to calculate each 1-hour arithmetic average.

(ii) At a minimum, each carbon monoxide 1-hour arithmetic average shall be corrected to 7 percent oxygen on an hourly basis using the 1-hour arithmetic average of the oxygen (or carbon dioxide) continuous emission monitoring system data.

(11) All valid continuous emission monitoring system data must be used in calculating the parameters specified under paragraph (i) of this section even if the minimum data requirements of paragraph (i)(10) of this section are not met. When carbon monoxide continuous emission data are not obtained because of continuous emission monitoring system breakdowns, repairs, calibration checks, and zero and span adjustments, emissions data shall be obtained using other monitoring systems as approved by EPA or EPA Reference Method 10 to provide, as necessary, the minimum valid emission data.

(12) Quarterly accuracy determinations and daily calibration drift tests for the carbon monoxide continuous emission monitoring system shall be performed in accordance with procedure 1 in appendix F of this part.

(j) The procedures specified in paragraphs (j)(1) and (j)(2) of this section shall be used for calculating municipal waste combustor unit capacity as defined under §60.51b.

(1) For municipal waste combustor units capable of combusting municipal solid waste continuously for a 24-hour period, municipal waste combustor unit capacity shall be calculated based on 24 hours of operation at the maximum charging rate. The maximum charging rate shall be determined as specified in paragraphs (j)(1)(i) and (j)(1)(ii) of this section as applicable.

(i) For combustors that are designed based on heat capacity, the maximum charging rate shall be calculated based on the maximum design heat input capacity of the unit and a heating value of 12,800 kilojoules per kilogram for combustors firing refuse-derived fuel and a heating value of 10,500 kilojoules per kilogram for combustors firing municipal solid waste that is not refuse-derived fuel.

(ii) For combustors that are not designed based on heat capacity, the maximum charging rate shall be the maximum design charging rate.

(2) For batch feed municipal waste combustor units, municipal waste combustor unit capacity shall be calculated as the maximum design amount of municipal solid waste that can be charged per batch multiplied by the maximum number of batches that could be processed in a 24-hour period. The maximum number of batches that could be processed in a 24-hour period is calculated as 24 hours divided by the design number of hours required to process one batch of municipal solid waste, and may include fractional batches (e.g., if one batch requires 16 hours, then 24/16, or 1.5 batches, could be combusted in a 24-hour period). For batch combustors that are designed based on heat capacity, the design heating value of 12,800 kilojoules per kilogram for combustors firing refuse-derived fuel and a heating value of 10,500 kilojoules per kilogram for combustors firing municipal solid waste that is not refuse-derived fuel shall be used in calculating the municipal waste combustor unit capacity in megagrams per day of municipal solid waste.

(k) The procedures specified in paragraphs (k)(1) through (k)(4) of this section shall be used for determining compliance with the fugitive ash emission limit under §60.55b.

(1) The EPA Reference Method 22 shall be used for determining compliance with the fugitive ash emission limit under §60.55b. The minimum observation time shall be a series of three 1-hour observations. The observation period shall include times when the facility is transferring ash from the municipal waste combustor unit to the area where ash is stored or loaded into containers or trucks.

(2) The average duration of visible emissions per hour shall be calculated from the three 1-hour observations. The average shall be used to determine compliance with §60.55b.

(3) The owner or operator of an affected facility shall conduct an initial performance test for fugitive ash emissions as required under §60.8 of subpart A of this part.

(4) Following the date that the initial performance test for fugitive ash emissions is completed or is required to be completed under §60.8 of subpart A of this part for an affected facility, the owner or operator shall conduct a performance test for fugitive ash emissions on an annual basis (no more than 12 calendar months following the previous performance test).

(l) The procedures specified in paragraphs (l)(1) through (l)(3) of this section shall be used to determine compliance with the opacity limit for air curtain incinerators under §60.56b.

(1) The EPA Reference Method 9 shall be used for determining compliance with the opacity limit.

(2) The owner or operator of the air curtain incinerator shall conduct an initial performance test for opacity as required under §60.8 of subpart A of this part.

(3) Following the date that the initial performance test is completed or is required to be completed under §60.8 of subpart A of this part, the owner or operator of the air curtain incinerator shall conduct a performance test for opacity on an annual basis (no more than 12 calendar months following the previous performance test).

(m) The owner or operator of an affected facility where activated carbon injection is used to comply with the mercury emission limit under §60.52b(a)(5), and/or the dioxin/furan emission limits under §60.52(b)(c), or the dioxin/furan emission level specified in paragraph (g)(5)(iii) of this section shall follow the procedures specified in paragraphs (m)(1) through (m)(4) of this section.

(1) During the performance tests for dioxins/furans and mercury, as applicable, the owner or operator shall estimate an average carbon mass feed rate based on carbon injection system operating parameters such as the screw feeder speed, hopper volume, hopper refill frequency, or other parameters appropriate to the feed system being employed, as specified in paragraphs (m)(1)(i) and (m)(1)(ii) of this section.

(i) An average carbon mass feed rate in kilograms per hour or pounds per hour shall be estimated during the initial performance test for mercury emissions and each subsequent performance test for mercury emissions.

(ii) An average carbon mass feed rate in kilograms per hour or pounds per hour shall be estimated during the initial performance test for dioxin/furan emissions and each subsequent performance test for dioxin/furan emissions. If a subsequent dioxin/furan performance test is being performed on only one affected facility at the MWC plant, as provided in paragraph (g)(5)(iii) of this section, the owner or operator may elect to apply the same estimated average carbon mass feed rate from the tested facility for all the similarly designed and operated affected facilities at the MWC plant.

(2) During operation of the affected facility, the carbon injection system operating parameter(s) that are the primary indicator(s) of the carbon mass feed rate (*e.g.* , screw feeder setting) shall be averaged over a block 8-hour period, and the 8-hour block average must equal or exceed the level(s) documented during the performance tests specified under paragraphs (m)(1)(i) and (m)(1)(ii) of this section, except as specified in paragraphs (m)(2)(i) and (m)(2)(ii) of this section.

(i) During the annual dioxin/furan or mercury performance test and the 2 weeks preceding the annual dioxin/furan or mercury performance test, no limit is applicable for average mass carbon feed rate if the provisions of paragraph (m)(2)(ii) of this section are met.

(ii) The limit for average mass carbon feed rate may be waived in accordance with permission granted by the Administrator for the purpose of evaluating system performance, testing new technology or control technologies, diagnostic testing, or related activities for the purpose of improving facility performance or advancing the state-of-the-art for controlling facility emissions.

(3) The owner or operator of an affected facility shall estimate the total carbon usage of the plant (kilograms or pounds) for each calendar quarter by two independent methods, according to the procedures in paragraphs (m)(3)(i) and (m)(3)(ii) of this section.

(i) The weight of carbon delivered to the plant.

(ii) Estimate the average carbon mass feed rate in kilograms per hour or pounds per hour for each hour of operation for each affected facility based on the parameters specified under paragraph (m)(1) of this section, and sum the results for all affected facilities at the plant for the total number of hours of operation during the calendar quarter.

(4) Pneumatic injection pressure or other carbon injection system operational indicator shall be used to provide additional verification of proper carbon injection system operation. The operational indicator shall provide an instantaneous visual and/or audible alarm to alert the operator of a potential interruption in the carbon feed that would not normally be indicated by direct monitoring of carbon mass feed rate (*e.g.* , continuous weight loss feeder) or monitoring of the carbon system operating parameter(s) that are the indicator(s) of carbon mass feed rate (*e.g.* , screw feeder speed). The carbon injection system operational indicator used to provide additional verification of carbon injection system operation, including basis for selecting the indicator and operator response to the indicator alarm, shall be included in section (e)(6) of the site-specific operating manual required under §60.54b(e) of this subpart.

(n) In place of periodic manual testing of mercury, cadmium, lead, or hydrogen chloride with EPA Reference Method 26, 26A, 29, or as an alternative ASTM D6784–02 (as applicable), the owner or operator of an affected facility may elect to install, calibrate, maintain, and operate a continuous emission monitoring system for monitoring emissions discharged to the atmosphere and record the output of the system. The option to use a continuous emission monitoring system for mercury takes effect on the date of approval of the site-specific monitoring plan required in paragraph (n)(13) and (o) of this section. The option to use a continuous emission monitoring system for cadmium, lead, or hydrogen chloride takes effect on the date a final performance specification applicable to cadmium, lead, or hydrogen chloride monitor is published in the Federal Registeror the date of approval of the site-specific monitoring plan required in paragraphs (n)(13) and (o) of this section. The owner or operator of an affected facility who elects to continuously monitor emissions instead of conducting manual performance testing shall install, calibrate, maintain, and operate a continuous emission monitoring system and shall comply with the requirements specified in paragraphs (n)(1) through (n)(13) of this section.

(1) Notify the Administrator one month before starting use of the system.

(2) Notify the Administrator one month before stopping use of the system.

(3) The monitor shall be installed, evaluated, and operated in accordance with §60.13 of subpart A of this part.

(4) The initial performance evaluation shall be completed no later than 180 days after the date of initial startup of the affected facility, as specified under §60.8 of subpart A of this part or within 180 days of notification to the Administrator of use of the continuous monitoring system if the owner or operator was previously determining compliance by Method 26, 26A, 29, or as an alternative ASTM D6784–02 (as applicable) performance tests, whichever is later.

(5) The owner or operator may request that compliance with the emission limits be determined using carbon dioxide measurements corrected to an equivalent of 7 percent oxygen. The relationship between oxygen and carbon dioxide levels for the affected facility shall be established as specified in paragraph (b)(6) of this section.

(6) The owner or operator shall conduct an initial performance test for emissions as required under §60.8 of subpart A of this part. Compliance with the emission limits shall be determined by using the continuous emission monitoring system specified in paragraph (n) of this section to measure emissions and calculating a 24-hour block arithmetic average emission concentration using EPA Reference Method 19, section 12.4.1.

(7) Compliance with the emission limits shall be determined based on the 24-hour daily (block) average of the hourly arithmetic average emission concentrations using continuous emission monitoring system outlet data.

(8) Beginning on April 28, 2008 for mercury and on the date two years after final performance specifications for cadmium, lead or hydrogen chloride monitors are published in theFederal Registeror the date two years after approval of a site-specific monitoring plan, valid continuous monitoring system hourly averages shall be obtained as specified in paragraphs (n)(8)(i) and (n)(8)(ii) of this section for at least 90 percent of the operating hours per calendar quarter and 95 percent of the operating hours per calendar year that the affected facility is combusting municipal solid waste.

(i) At least two data points per hour shall be used to calculate each 1-hour arithmetic average.

(ii) Each 1-hour arithmetic average shall be corrected to 7 percent oxygen on an hourly basis using the 1-hour arithmetic average of the oxygen (or carbon dioxide) continuous emission monitoring system data.

(9) The 1-hour arithmetic averages required under paragraph (n)(7) of this section shall be expressed in micrograms per dry standard cubic meter for mercury, cadmium, lead and parts per million dry volume for hydrogen chloride corrected to 7 percent oxygen (dry basis) and shall be used to calculate the 24-hour daily arithmetic (block) average emission concentrations. The 1-hour arithmetic averages shall be calculated using the data points required under §60.13(e)(2) of subpart A of this part.

(10) All valid continuous emission monitoring system data shall be used in calculating average emission concentrations even if the minimum continuous emission monitoring system data requirements of paragraph (n)(8) of this section are not met.

(11) The continuous emission monitoring system shall be operated according to the performance specifications in paragraphs (n)(11)(i) through (n)(11)(iii) of this section or the approved site-specific monitoring plan.

(i) For mercury, Performance Specification 12A in appendix B of this part.

(ii)–(iii) [Reserved]

(12) During each relative accuracy test run of the continuous emission monitoring system required by the performance specifications in paragraph (n)(11) of this section, mercury, cadmium, lead, hydrogen chloride, and oxygen (or carbon dioxide) data shall be collected concurrently (or within a 30- to 60-minute period) by both the continuous emission monitors and the test methods specified in paragraphs (n)(12)(i) through (n)(12)(iii) of this section.

(i) For mercury, cadmium, and lead, EPA Reference Method 29 or as an alternative ASTM D6784–02 shall be used.

(ii) For hydrogen chloride, EPA Reference Method 26 or 26A shall be used.

(iii) For oxygen (or carbon dioxide), EPA Reference Method 3, 3A, or 3B, as applicable shall be used.

(13) The owner or operator who elects to install, calibrate, maintain, and operate a continuous emission monitoring system for mercury, cadmium, lead, or hydrogen chloride must develop and implement a site-specific monitoring plan as specified in paragraph (o) of this section. The owner or operator who relies on a performance specification may refer to that document in addressing applicable procedures and criteria.

(14) When emissions data are not obtained because of continuous emission monitoring system breakdowns, repairs, calibration checks, and zero and span adjustments, parametric monitoring data shall be obtained by using other monitoring systems as approved by EPA.

(o) The owner or operator who elects to install, calibrate, maintain, and operate a continuous emission monitoring system for mercury, cadmium, lead, or hydrogen chloride must develop and submit for approval by EPA, a site-specific mercury, cadmium, lead, or hydrogen chloride monitoring plan that addresses the elements and requirements in paragraphs (o)(1) through (o)(7) of this section.

(1) Installation of the continuous emission monitoring system sampling probe or other interface at a measurement location relative to each affected process unit such that the measurement is representative of control of the exhaust emissions (*e.g.* , on or downstream of the last control device).

(2) Performance and equipment specifications for the sample interface, the pollutant concentration analyzer, and the data collection and reduction system.

(3) Performance evaluation procedures and acceptance criteria (*e.g.* , calibrations).

(4) Provisions for periods when the continuous emission monitoring system is out of control as described in paragraphs (o)(4)(i) through (o)(4)(iii) of this section.

(i) A continuous emission monitoring system is out of control if either of the conditions in paragraphs (o)(4)(i)(A) or (o)(4)(ii)(B) of this section are met.

(A) The zero (low-level), mid-level (if applicable), or high-level calibration drift exceeds two times the applicable calibration drift specification in the applicable performance specification or in the relevant standard; or

(B) The continuous emission monitoring system fails a performance test audit (*e.g.* , cylinder gas audit), relative accuracy audit, relative accuracy test audit, or linearity test audit.

(ii) When the continuous emission monitoring system is out of control as defined in paragraph (o)(4)(i) of this section, the owner or operator of the affected source shall take the necessary corrective action and shall repeat all necessary tests that indicate that the system is out of control. The owner or operator shall take corrective action and conduct retesting until the performance requirements are below the applicable limits. The beginning of the out-of-control period is the hour the owner or operator conducts a performance check (*e.g.* , calibration drift) that indicates an exceedance of the performance requirements established under this part. The end of the out-of-control period is the hour following the completion of corrective action and successful demonstration that the system is within the allowable limits. During the period the continuous emission monitoring system is out of control, recorded data shall not be used in data averages and calculations or to meet any data availability requirements in paragraph (n)(8) of this section.

(iii) The owner or operator of a continuous emission monitoring system that is out of control as defined in paragraph (o)(4) of this section shall submit all information concerning out-of-control periods, including start and end dates and hours and descriptions of corrective actions taken in the annual or semiannual compliance reports required in §60.59b(g) or (h).

(5) Ongoing data quality assurance procedures for continuous emission monitoring systems as described in paragraphs (o)(5)(i) and (o)(5)(ii) of this section.

(i) Develop and implement a continuous emission monitoring system quality control program. As part of the quality control program, the owner or operator shall develop and submit to EPA for approval, upon request, a site-specific performance evaluation test plan for the continuous emission monitoring system performance evaluation required in paragraph (o)(5)(ii) of this section. In addition, each quality control program shall include, at a minimum, a written protocol that describes procedures for each of the operations described in paragraphs (o)(7)(i)(A) through (o)(7)(i)(F) of this section.

(A) Initial and any subsequent calibration of the continuous emission monitoring system;

(B) Determination and adjustment of the calibration drift of the continuous emission monitoring system;

(C) Preventive maintenance of the continuous emission monitoring system, including spare parts inventory;

(D) Data recording, calculations, and reporting;

(E) Accuracy audit procedures, including sampling and analysis methods; and

(F) Program of corrective action for a malfunctioning continuous emission monitoring system.

(ii) The performance evaluation test plan shall include the evaluation program objectives, an evaluation program summary, the performance evaluation schedule, data quality objectives, and both an internal and external quality assurance program. Data quality objectives are the pre-evaluation expectations of precision, accuracy, and completeness of data. The internal quality assurance program shall include, at a minimum, the activities planned by routine operators and analysts to provide an assessment of continuous emission monitoring system performance, for example, plans for relative accuracy testing using the appropriate reference method in §60.58b(n)(12) of this section. The external quality assurance program shall include, at a minimum, systems audits that include the opportunity for on-site evaluation by the Administrator of instrument calibration, data validation, sample logging, and documentation of quality control data and field maintenance activities.

(6) Conduct a performance evaluation of each continuous emission monitoring system in accordance with the site-specific monitoring plan.

(7) Operate and maintain the continuous emission monitoring system in continuous operation according to the site-specific monitoring plan.

(p) In place of periodic manual testing of dioxin/furan or mercury with EPA Reference Method 23, 29, or as an alternative ASTM D6784–02 (as applicable), the owner or operator of an affected facility may elect to install, calibrate, maintain, and operate a continuous automated sampling system for determining emissions discharged to the atmosphere. This option takes effect on the date a final performance specification applicable to such continuous automated sampling systems is published in theFederal Registeror the date of approval of a site-specific monitoring plan required in paragraphs (p)(10) and (q) of this section. The owner or operator of an affected facility who elects to use a continuous automated sampling system to determine emissions instead of conducting manual performance testing shall install, calibrate, maintain, and operate the sampling system and conduct analyses in compliance with the requirements specified in paragraphs (p)(1) through (p)(12) of this section.

(1) Notify the Administrator one month before starting use of the system.

(2) Notify the Administrator one month before stopping use of the system.

(3) The initial performance evaluation shall be completed no later than 180 days after the date of initial startup of the affected facility, as specified under §60.8 of subpart A of this part or within 180 days of notification to the Administrator of use of the continuous monitoring system if the owner or operator was previously determining compliance by manual performance testing using Method 23, 29, or as an alternative ASTM D6784–02 (as applicable), whichever is later.

(4) The owner or operator may request that compliance with the emission limits be determined using carbon dioxide measurements corrected to an equivalent of 7 percent oxygen. The relationship between oxygen and carbon dioxide levels for the affected facility shall be established as specified in paragraph (b)(6) of this section.

(5) The owner or operator shall conduct an initial performance test for emissions as required under §60.8 of subpart A of this part. Compliance with the emission limits shall be determined by using the continuous automated sampling system specified in paragraph (p) of this section to collect integrated samples and analyze emissions for the time period specified in paragraphs (p)(5)(i) and (ii) of this section.

(i) For dioxin/furan, the continuous automated sampling system shall collect an integrated sample over each 2-week period. The collected sample shall be analyzed using Method 23.

(ii) For mercury, the continuous automated sampling system shall collect an integrated sample over each 24-hour daily period and the sample shall be analyzed according to the applicable final performance specification or the approved site-specific monitoring plan required by paragraph (q) of this section.

(6) Compliance with the emission limits shall be determined based on 2-week emission concentrations for dioxin/furan and on the 24-hour daily emission concentrations for mercury using samples collected at the system outlet. The emission concentrations shall be expressed in nanograms per dry standard cubic meter (total mass) for dioxin/furan and micrograms per dry standard cubic meter for mercury, corrected to 7 percent oxygen (dry basis).

(7) Beginning on the date two years after the respective final performance specification for continuous automated sampling systems for dioxin/furan or mercury is published in theFederal Registeror two years after approval of a site-specific monitoring plan, the continuous automated sampling system must be operated and collect emissions for at least 90 percent of the operating hours per calendar quarter and 95 percent of the operating hours per calendar year that the affected facility is combusting municipal solid waste.

(8) All valid data shall be used in calculating emission concentrations.

(9) The continuous automated sampling system shall be operated according to the final performance specification in paragraphs (p)(9)(i) or (p)(9)(ii) of this section or the approved site-specific monitoring plan.

(i)–(ii) [Reserved]

(10) The owner or operator who elects to install, calibrate, maintain, and operate a continuous automated sampling system for dioxin/furan or mercury must develop and implement a site-specific monitoring plan as specified in paragraph (q) of this section. The owner or operator who relies on a performance specification may refer to that document in addressing applicable procedures and criteria.

(11) When emissions data are not obtained because of continuous automated sampling system breakdowns, repairs, quality assurance checks, or adjustments, parametric monitoring data shall be obtained by using other monitoring systems as approved by EPA.

(q) The owner or operator who elects to install, calibrate, maintain, and operate a continuous automated sampling system for dioxin/furan or mercury must develop and submit for approval by EPA, a site-specific monitoring plan that has sufficient detail to assure the validity of the continuous automated sampling system data and that addresses the elements and requirements in paragraphs (q)(1) through (q)(7) of this section.

(1) Installation of the continuous automated sampling system sampling probe or other interface at a measurement location relative to each affected process unit such that the measurement is representative of control of the exhaust emissions (*e.g.* , on or downstream of the last control device).

(2) Performance and equipment specifications for the sample interface, the pollutant concentration analytical method, and the data collection system.

(3) Performance evaluation procedures and acceptance criteria.

(4) Provisions for periods when the continuous automated sampling system is malfunctioning or is out of control as described in paragraphs (q)(4)(i) through (q)(4)(iii) of this section.

(i) The site-specific monitoring plan shall identify criteria for determining that the continuous automated sampling system is out of control. This shall include periods when the sampling system is not collecting a representative sample or is malfunctioning, or when the analytical method does not meet site-specific quality criteria established in paragraph (q)(5) of this section.

(ii) When the continuous automated sampling system is out of control as defined in paragraph (q)(4)(i) of this section, the owner or operator shall take the necessary corrective action and shall repeat all necessary tests that indicate that the system is out of control. The owner or operator shall take corrective action and conduct retesting until the performance requirements are within the applicable limits. The out-of-control period includes all hours that the sampling system was not collecting a representative sample or was malfunctioning, or hours represented by a sample for which the analysis did not meet the relevant quality criteria. Emissions data obtained during an out-of-control period shall not be used in determining compliance with the emission limits or to meet any data availability requirements in paragraph (p)(8) of this section.

(iii) The owner or operator of a continuous automated sampling system that is out of control as defined in paragraph (q)(4) of this section shall submit all information concerning out-of-control periods, including start and end dates and hours and descriptions of corrective actions taken in the annual or semiannual compliance reports required in §60.59b(g) or (h).

(5) Ongoing data quality assurance procedures for continuous automated sampling systems as described in paragraphs (q)(5)(i) and (q)(5)(ii) of this section.

(i) Develop and implement a continuous automated sampling system and analysis quality control program. As part of the quality control program, the owner or operator shall develop and submit to EPA for approval, upon request, a site-specific performance evaluation test plan for the continuous automated sampling system performance evaluation required in paragraph (q)(5)(ii) of this section. In addition, each quality control program shall include, at a minimum, a written protocol that describes procedures for each of the operations described in paragraphs (q)(7)(i)(A) through (q)(7)(i)(F) of this section.

(A) Correct placement, installation of the continuous automated sampling system such that the system is collecting a representative sample of gas;

(B) Initial and subsequent calibration of flow such that the sample collection rate of the continuous automated sampling system is known and verifiable;

(C) Procedures to assure representative (*e.g.* , proportional or isokinetic) sampling;

(D) Preventive maintenance of the continuous automated sampling system, including spare parts inventory and procedures for cleaning equipment, replacing sample collection media, or other servicing at the end of each sample collection period;

(E) Data recording and reporting, including an automated indicator and recording device to show when the continuous automated monitoring system is operating and collecting data and when it is not collecting data;

(F) Accuracy audit procedures for analytical methods; and

(G) Program of corrective action for a malfunctioning continuous automated sampling system.

(ii) The performance evaluation test plan shall include the evaluation program objectives, an evaluation program summary, the performance evaluation schedule, data quality objectives, and both an internal and external quality assurance program. Data quality objectives are the pre-evaluation expectations of precision, accuracy, and completeness of data. The internal quality assurance program shall include, at a minimum, the activities planned by routine operators and analysts to provide an assessment of continuous automated sampling system performance, for example, plans for relative accuracy testing using the appropriate reference method in 60.58b(p)(3), and an assessment of quality of analysis results. The external quality assurance program shall include, at a minimum,

systems audits that include the opportunity for on-site evaluation by the Administrator of instrument calibration, data validation, sample logging, and documentation of quality control data and field maintenance activities.

(6) Conduct a performance evaluation of each continuous automated sampling system in accordance with the site-specific monitoring plan.

(7) Operate and maintain the continuous automated sampling system in continuous operation according to the site-specific monitoring plan.

[60 FR 65419, Dec. 19, 1995, as amended at 62 FR 45126, Aug. 25, 1997; 65 FR 61753, Oct. 17, 2000; 66 FR 57827, Nov. 16, 2001; 71 FR 27337, May 10, 2006]

§ 60.59b Reporting and recordkeeping requirements.

As described under Section 60.57b, Dynamis will comply with the reporting and recordkeeping requirements described in paragraph (a) below with the Idaho DEQ Permit to Construct application. Items required under paragraph (b) will be submitted with the initial Notice of Construction. Dynamis will retain all records required under this section for a minimum of 5 years. Records will be available upon request to EPA or its delegated authority.

Dynamis will submit the information specified in paragraphs (f)(1) through (f)(6) of this section in the initial performance test report. Following the first year of operation, Dynamis will submit an annual report that includes the information specified in paragraphs (g)(1) through (g)(5) of this section, as applicable, no later than February 1 of each year following the calendar year in which the data were collected. Once the unit is subject to Title V permitting requirements Dynamis will submit these reports semiannually.

Dynamis will submit a semiannual report that includes the information specified in paragraphs (h)(1) through (h)(5) of this section for any recorded pollutant or parameter that does not comply with the pollutant or parameter limit specified under this subpart, according to the schedule specified under paragraph (h)(6) of this section.

Dynamis will submit all reports specified under paragraphs (a), (b), (c), (f), (g), (h), and (i) of this section as a paper copy, postmarked on or before the submittal dates specified under these paragraphs, and maintained onsite as a paper copy for a period of 5 years. All records specified under paragraphs (d) and (e) of this section will be maintained onsite in either paper copy or computer-readable format.

If Dynamis elects to continuously monitor particulate matter, cadmium, lead, mercury, or hydrogen chloride, or who elect to use continuous automated sampling systems for dioxin/furan or mercury emissions, instead of conducting performance testing using EPA manual test methods, Dynamis will notify the Administrator one month prior to starting or stopping use of the particulate matter, cadmium, lead, mercury, hydrogen chloride, and dioxin/furan continuous emission monitoring systems or continuous automated sampling systems and will comply with the additional reporting and recordkeeping requirements specified under paragraphs (n) and (o) of this section.

(a) The owner or operator of an affected facility with a capacity to combust greater than 250 tons per day shall submit, on or before the date the application for a construction permit is submitted under 40 CFR part 51, subpart I, or part 52, as applicable, the items specified in paragraphs (a)(1) through (a)(4) of this section.

(1) The preliminary and final draft materials separation plans required by §60.57b(a)(1) and (a)(5).

(2) A copy of the notification of the public meeting required by §60.57b(a)(1)(ii).

(3) A transcript of the public meeting required by §60.57b(a)(2).

(4) A copy of the document summarizing responses to public comments required by §60.57b(a)(3).

(b) The owner or operator of an affected facility with a capacity to combust greater than 250 tons per day shall submit a notification of construction, which includes the information specified in paragraphs (b)(1) through (b)(5) of this section.

(1) Intent to construct.

(2) Planned initial startup date.

(3) The types of fuels that the owner or operator plans to combust in the affected facility.

(4) The municipal waste combustor unit capacity, and supporting capacity calculations prepared in accordance with §60.58b(j).

(5) Documents associated with the siting requirements under §60.57b (a) and (b), as specified in paragraphs (b)(5)(i) through (b)(5)(v) of this section.

(i) The siting analysis required by §60.57b (b)(1) and (b)(2).

(ii) The final materials separation plan for the affected facility required by §60.57b(a)(10).

(iii) A copy of the notification of the public meeting required by §60.57b(b)(3)(ii).

(iv) A transcript of the public meeting required by §60.57b(b)(4).

(v) A copy of the document summarizing responses to public comments required by §60.57b (a)(9) and (b)(5).

(c) The owner or operator of an air curtain incinerator subject to the opacity limit under §60.56b shall provide a notification of construction that includes the information specified in paragraphs (b)(1) through (b)(4) of this section.

(d) The owner or operator of an affected facility subject to the standards under §§60.52b, 60.53b, 60.54b, 60.55b, and 60.57b shall maintain records of the information specified in paragraphs (d)(1) through (d)(15) of this section, as applicable, for each affected facility for a period of at least 5 years.

(1) The calendar date of each record.

(2) The emission concentrations and parameters measured using continuous monitoring systems as specified under paragraphs (d)(2)(i) and (d)(2)(ii) of this section.

(i) The measurements specified in paragraphs (d)(2)(i)(A) through (d)(2)(i)(F) of this section shall be recorded and be available for submittal to the Administrator or review on site by an EPA or State inspector.

(A) All 6-minute average opacity levels as specified under §60.58b(c).

(B) All 1-hour average sulfur dioxide emission concentrations as specified under §60.58b(e).

(C) All 1-hour average nitrogen oxides emission concentrations as specified under §60.58b(h).

(D) All 1-hour average carbon monoxide emission concentrations, municipal waste combustor unit load measurements, and particulate matter control device inlet temperatures as specified under §60.58b(i).

(E) For owners and operators who elect to continuously monitor particulate matter, cadmium, lead, mercury, or hydrogen chloride emissions instead of conducting performance testing using EPA manual test methods, all 1-hour average particulate matter, cadmium, lead, mercury, or hydrogen chloride emission concentrations as specified under §60.58b(n).

(ii) The average concentrations and percent reductions, as applicable, specified in paragraphs (d)(2)(ii)(A) through (d)(2)(ii)(F) of this section shall be computed and recorded, and shall be available for submittal to the Administrator or review on-site by an EPA or State inspector.

(A) All 24-hour daily geometric average sulfur dioxide emission concentrations and all 24-hour daily geometric average percent reductions in sulfur dioxide emissions as specified under §60.58b(e).

(B) All 24-hour daily arithmetic average nitrogen oxides emission concentrations as specified under §60.58b(h).

(C) All 4-hour block or 24-hour daily arithmetic average carbon monoxide emission concentrations, as applicable, as specified under §60.58b(i).

(D) All 4-hour block arithmetic average municipal waste combustor unit load levels and particulate matter control device inlet temperatures as specified under §60.58b(i).

(E) For owners and operators who elect to continuously monitor particulate matter, cadmium, lead, mercury, or hydrogen chloride emissions instead of conducting performance testing using EPA manual test methods, all 24-hour daily arithmetic average particulate matter, cadmium, lead, mercury, or hydrogen chloride emission concentrations as specified under §60.58b(n).

(F) For owners and operators who elect to use a continuous automated sampling system to monitor mercury or dioxin/furan instead of conducting performance testing using EPA manual test methods, all integrated 24-hour mercury concentrations or all integrated 2-week dioxin/furan concentrations as specified under §60.586(p).

(3) Identification of the calendar dates when any of the average emission concentrations, percent reductions, or operating parameters recorded under paragraphs (d)(2)(ii)(A) through (d)(2)(ii)(F) of this section, or the opacity levels recorded under paragraph (d)(2)(i)(A) of this section are above the applicable limits, with reasons for such exceedances and a description of corrective actions taken.

(4) For affected facilities that apply activated carbon for mercury or dioxin/furan control, the records specified in paragraphs (d)(4)(i) through (d)(4)(v) of this section.

(i) The average carbon mass feed rate (in kilograms per hour or pounds per hour) estimated as required under §60.58b(m)(1)(i) of this section during the initial mercury performance test and all subsequent annual performance tests, with supporting calculations.

(ii) The average carbon mass feed rate (in kilograms per hour or pounds per hour) estimated as required under §60.58b(m)(1)(ii) of this section during the initial dioxin/furan performance test and all subsequent annual performance tests, with supporting calculations.

(iii) The average carbon mass feed rate (in kilograms per hour or pounds per hour) estimated for each hour of operation as required under §60.58b(m)(3)(ii) of this section, with supporting calculations.

(iv) The total carbon usage for each calendar quarter estimated as specified by paragraph 60.58b(m)(3) of this section, with supporting calculations.

(v) Carbon injection system operating parameter data for the parameter(s) that are the primary indicator(s) of carbon feed rate (e.g., screw feeder speed).

(5) [Reserved]

(6) Identification of the calendar dates and times (hours) for which valid hourly data specified in paragraphs (d)(6)(i) through (d)(6)(vi) of this section have not been obtained, or continuous automated sampling systems were not operated as specified in paragraph (d)(6)(vii) of this section, including reasons for not obtaining the data and a description of corrective actions taken.

(i) Sulfur dioxide emissions data;

(ii) Nitrogen oxides emissions data;

(iii) Carbon monoxide emissions data;

(iv) Municipal waste combustor unit load data;

(v) Particulate matter control device temperature data; and

(vi) For owners and operators who elect to continuously monitor particulate matter, cadmium, lead, mercury, or hydrogen chloride emissions instead of performance testing by EPA manual test methods, particulate matter, cadmium, lead, mercury, or hydrogen chloride emissions data.

(vii) For owners and operators who elect to use continuous automated sampling systems for dioxins/furans or mercury as allowed under “60.58b(p) and (q), dates and times when the sampling systems were not operating or were not collecting a valid sample.

(7) Identification of each occurrence that sulfur dioxide emissions data, nitrogen oxides emissions data, particulate matter emissions data, cadmium emissions data, lead emissions data, mercury emissions data, hydrogen chloride emissions data, or dioxin/furan emissions data (for owners and operators who elect to continuously monitor particulate matter, cadmium, lead, mercury, or hydrogen chloride, or who elect to use continuous automated sampling systems for dioxin/furan or mercury emissions, instead of conducting performance testing using EPA manual test methods) or operational data (*i.e.* , carbon monoxide emissions, unit load, and particulate matter control device temperature) have been excluded from the calculation of average emission concentrations or parameters, and the reasons for excluding the data.

(8) The results of daily drift tests and quarterly accuracy determinations for sulfur dioxide, nitrogen oxides, and carbon monoxide continuous emission monitoring systems, as required under appendix F of this part, procedure 1.

(9) The test reports documenting the results of the initial performance test and all annual performance tests listed in paragraphs (d)(9)(i) and (d)(9)(ii) of this section shall be recorded along with supporting calculations.

(i) The results of the initial performance test and all annual performance tests conducted to determine compliance with the particulate matter, opacity, cadmium, lead, mercury, dioxins/furans, hydrogen chloride, and fugitive ash emission limits.

(ii) For the initial dioxin/furan performance test and all subsequent dioxin/furan performance tests recorded under paragraph (d)(9)(i) of this section, the maximum demonstrated municipal waste combustor unit load and maximum demonstrated particulate matter control device temperature (for each particulate matter control device).

(10) An owner or operator who elects to continuously monitor emissions instead of performance testing by EPA manual methods must maintain records specified in paragraphs (10)(i) through (iii) of this section.

(i) For owners and operators who elect to continuously monitor particulate matter instead of conducting performance testing using EPA manual test methods), as required under appendix F of this part, procedure 2, the results of daily drift tests and quarterly accuracy determinations for particulate matter.

(ii) For owners and operators who elect to continuously monitor cadmium, lead, mercury, or hydrogen chloride instead of conducting EPA manual test methods, the results of all quality evaluations, such as daily drift tests and periodic accuracy determinations, specified in the approved site-specific performance evaluation test plan required by §60.58b(o)(5).

(iii) For owners and operators who elect to use continuous automated sampling systems for dioxin/furan or mercury, the results of all quality evaluations specified in the approved site-specific performance evaluation test plan required by §60.58b(q)(5).

(11) For each affected facility subject to the siting provisions under §60.57b, the siting analysis, the final materials separation plan, a record of the location and date of the public meetings, and the documentation of the responses to public comments received at the public meetings.

(12) The records specified in paragraphs (d)(12)(i) through (d)(12)(iv) of this section.

(i) Records showing the names of the municipal waste combustor chief facility operator, shift supervisors, and control room operators who have been provisionally certified by the American Society of Mechanical Engineers or an equivalent State-approved certification program as required by §60.54b(a) including the dates of initial and renewal certifications and documentation of current certification.

(ii) Records showing the names of the municipal waste combustor chief facility operator, shift supervisors, and control room operators who have been fully certified by the American Society of Mechanical Engineers or an equivalent State-approved certification program as required by §60.54b(b) including the dates of initial and renewal certifications and documentation of current certification.

(iii) Records showing the names of the municipal waste combustor chief facility operator, shift supervisors, and control room operators who have completed the EPA municipal waste combustor operator training course or a State-approved equivalent course as required by §60.54b(d) including documentation of training completion.

(iv) Records of when a certified operator is temporarily off site. Include two main items:

(A) If the certified chief facility operator and certified shift supervisor are off site for more than 12 hours, but for 2 weeks or less, and no other certified operator is on site, record the dates that the certified chief facility operator and certified shift supervisor were off site.

(B) When all certified chief facility operators and certified shift supervisors are off site for more than 2 weeks and no other certified operator is on site, keep records of four items:

(*1*) Time of day that all certified persons are off site.

(*2*) The conditions that cause those people to be off site.

(*3*) The corrective actions taken by the owner or operator of the affected facility to ensure a certified chief facility operator or certified shift supervisor is on site as soon as practicable.

(*4*) Copies of the written reports submitted every 4 weeks that summarize the actions taken by the owner or operator of the affected facility to ensure that a certified chief facility operator or certified shift supervisor will be on site as soon as practicable.

(13) Records showing the names of persons who have completed a review of the operating manual as required by §60.54b(f) including the date of the initial review and subsequent annual reviews.

(14) For affected facilities that apply activated carbon, identification of the calendar dates when the average carbon mass feed rates recorded under paragraph (d)(4)(iii) of this section were less than either of the hourly carbon feed rates estimated during performance tests for mercury emissions and recorded under paragraphs (d)(4)(i) and (d)(4)(ii) of this section, respectively, with reasons for such feed rates and a description of corrective actions taken. For affected facilities that apply activated carbon, identification of the calendar dates when the average carbon mass feed rates recorded under paragraph (d)(4)(iii) of this section were less than either of the hourly carbon feed rates estimated during performance tests for dioxin/furan emissions and recorded under paragraphs (d)(4)(i) and (d)(4)(ii) of this section, respectively, with reasons for such feed rates and a description of corrective actions taken.

(15) For affected facilities that apply activated carbon for mercury or dioxin/furan control, identification of the calendar dates when the carbon injection system operating parameter(s) that are the primary indicator(s) of carbon mass feed rate (e.g., screw feeder speed) recorded under paragraph (d)(4)(v) of this section are below the level(s) estimated during the performance tests as specified in §60.58b(m)(1)(i) and §60.58b(m)(1)(ii) of this section, with reasons for such occurrences and a description of corrective actions taken.

(e) The owner or operator of an air curtain incinerator subject to the opacity limit under §60.56b shall maintain records of results of the initial opacity performance test and subsequent performance tests required by §60.58b(l) for a period of at least 5 years.

(f) The owner or operator of an affected facility shall submit the information specified in paragraphs (f)(1) through (f)(6) of this section in the initial performance test report.

(1) The initial performance test data as recorded under paragraphs (d)(2)(ii)(A) through (d)(2)(ii)(D) of this section for the initial performance test for sulfur dioxide, nitrogen oxides, carbon monoxide, municipal waste combustor unit load level, and particulate matter control device inlet temperature.

(2) The test report documenting the initial performance test recorded under paragraph (d)(9) of this section for particulate matter, opacity, cadmium, lead, mercury, dioxins/furans, hydrogen chloride, and fugitive ash emissions.

(3) The performance evaluation of the continuous emission monitoring system using the applicable performance specifications in appendix B of this part.

(4) The maximum demonstrated municipal waste combustor unit load and maximum demonstrated particulate matter control device inlet temperature(s) established during the initial dioxin/furan performance test as recorded under paragraph (d)(9) of this section.

(5) For affected facilities that apply activated carbon injection for mercury control, the owner or operator shall submit the average carbon mass feed rate recorded under paragraph (d)(4)(i) of this section.

(6) For those affected facilities that apply activated carbon injection for dioxin/furan control, the owner or operator shall submit the average carbon mass feed rate recorded under paragraph (d)(4)(ii) of this section.

(g) Following the first year of municipal waste combustor operation, the owner or operator of an affected facility shall submit an annual report that includes the information specified in paragraphs (g)(1) through (g)(5) of this section, as applicable, no later than February 1 of each year following the calendar year in which the data were collected (once the unit is subject to permitting requirements under title V of the Act, the owner or operator of an affected facility must submit these reports semiannually).

(1) A summary of data collected for all pollutants and parameters regulated under this subpart, which includes the information specified in paragraphs (g)(1)(i) through (g)(1)(v) of this section.

(i) A list of the particulate matter, opacity, cadmium, lead, mercury, dioxins/furans, hydrogen chloride, and fugitive ash emission levels achieved during the performance tests recorded under paragraph (d)(9) of this section.

(ii) A list of the highest emission level recorded for sulfur dioxide, nitrogen oxides, carbon monoxide, particulate matter, cadmium, lead, mercury, hydrogen chloride, and dioxin/furan (for owners and operators who elect to continuously monitor particulate matter, cadmium, lead, mercury, hydrogen chloride, and dioxin/furan emissions instead of conducting performance testing using EPA manual test methods), municipal waste combustor unit load level, and particulate matter control device inlet temperature based on the data recorded under paragraphs (d)(2)(ii)(A) through (d)(2)(ii)(E) of this section.

(iii) List the highest opacity level measured, based on the data recorded under paragraph (d)(2)(i)(A) of this section.

(iv) Periods when valid data were not obtained as described in paragraphs (g)(1)(iv)(A) through (g)(1)(iv)(C) of this section.

(A) The total number of hours per calendar quarter and hours per calendar year that valid data for sulfur dioxide, nitrogen oxides, carbon monoxide, municipal waste combustor unit load, or particulate matter control device temperature data were not obtained based on the data recorded under paragraph (d)(6) of this section.

(B) For owners and operators who elect to continuously monitor particulate matter, cadmium, lead, mercury, and hydrogen chloride emissions instead of conducting performance testing using EPA manual test methods, the total

number of hours per calendar quarter and hours per calendar year that valid data for particulate matter, cadmium, lead, mercury, and hydrogen chloride were not obtained based on the data recorded under paragraph (d)(6) of this section. For each continuously monitored pollutant or parameter, the hours of valid emissions data per calendar quarter and per calendar year expressed as a percent of the hours per calendar quarter or year that the affected facility was operating and combusting municipal solid waste.

(C) For owners and operators who elect to use continuous automated sampling systems for dioxin/furan or mercury, the total number of hours per calendar quarter and hours per calendar year that the sampling systems were not operating or were not collecting a valid sample based on the data recorded under paragraph (d)(6)(vii) of this section. Also, the number of hours during which the continuous automated sampling system was operating and collecting a valid sample as a percent of hours per calendar quarter or year that the affected facility was operating and combusting municipal solid waste.

(v) Periods when valid data were excluded from the calculation of average emission concentrations or parameters as described in paragraphs (g)(1)(v)(A) through (g)(1)(v)(C) of this section.

(A) The total number of hours that data for sulfur dioxide, nitrogen oxides, carbon monoxide, municipal waste combustor unit load, and particulate matter control device temperature were excluded from the calculation of average emission concentrations or parameters based on the data recorded under paragraph (d)(7) of this section.

(B) For owners and operators who elect to continuously monitor particulate matter, cadmium, lead, mercury, or hydrogen chloride emissions instead of conducting performance testing using EPA manual test methods, the total number of hours that data for particulate matter, cadmium, lead, mercury, or hydrogen chloride were excluded from the calculation of average emission concentrations or parameters based on the data recorded under paragraph (d)(7) of this section.

(C) For owners and operators who elect to use continuous automated sampling systems for dioxin/furan or mercury, the total number of hours that data for mercury and dioxin/furan were excluded from the calculation of average emission concentrations or parameters based on the data recorded under paragraph (d)(7) of this section.

(2) The summary of data reported under paragraph (g)(1) of this section shall also provide the types of data specified in paragraphs (g)(1)(i) through (g)(1)(vi) of this section for the calendar year preceding the year being reported, in order to provide the Administrator with a summary of the performance of the affected facility over a 2-year period.

(3) The summary of data including the information specified in paragraphs (g)(1) and (g)(2) of this section shall highlight any emission or parameter levels that did not achieve the emission or parameter limits specified under this subpart.

(4) A notification of intent to begin the reduced dioxin/furan performance testing schedule specified in §60.58b(g)(5)(iii) of this section during the following calendar year and notification of intent to apply the average carbon mass feed rate and associated carbon injection system operating parameter levels as established in §60.58b(m) to similarly designed and equipped units on site.

(5) Documentation of periods when all certified chief facility operators and certified shift supervisors are off site for more than 12 hours.

(h) The owner or operator of an affected facility shall submit a semiannual report that includes the information specified in paragraphs (h)(1) through (h)(5) of this section for any recorded pollutant or parameter that does not comply with the pollutant or parameter limit specified under this subpart, according to the schedule specified under paragraph (h)(6) of this section.

(1) The semiannual report shall include information recorded under paragraph (d)(3) of this section for sulfur dioxide, nitrogen oxides, carbon monoxide, particulate matter, cadmium, lead, mercury, hydrogen chloride, dioxin/furan (for owners and operators who elect to continuously monitor particulate matter, cadmium, lead, mercury, or hydrogen chloride, or who elect to use continuous automated sampling systems for dioxin/furan or mercury emissions, instead of conducting performance testing using EPA manual test methods) municipal waste combustor unit load level, particulate matter control device inlet temperature, and opacity.

(2) For each date recorded as required by paragraph (d)(3) of this section and reported as required by paragraph (h)(1) of this section, the semiannual report shall include the sulfur dioxide, nitrogen oxides, carbon monoxide, municipal waste combustor unit load level, particulate matter control device inlet temperature, or opacity data, as applicable, recorded under paragraphs (d)(2)(ii)(A) through (d)(2)(ii)(D) and (d)(2)(i)(A) of this section, as applicable.

(3) If the test reports recorded under paragraph (d)(9) of this section document any particulate matter, opacity, cadmium, lead, mercury, dioxins/furans, hydrogen chloride, and fugitive ash emission levels that were above the applicable pollutant limits, the semiannual report shall include a copy of the test report documenting the emission levels and the corrective actions taken.

(4) The semiannual report shall include the information recorded under paragraph (d)(15) of this section for the carbon injection system operating parameter(s) that are the primary indicator(s) of carbon mass feed rate.

(5) For each operating date reported as required by paragraph (h)(4) of this section, the semiannual report shall include the carbon feed rate data recorded under paragraph (d)(4)(iii) of this section.

(6) Semiannual reports required by paragraph (h) of this section shall be submitted according to the schedule specified in paragraphs (h)(6)(i) and (h)(6)(ii) of this section.

(i) If the data reported in accordance with paragraphs (h)(1) through (h)(5) of this section were collected during the first calendar half, then the report shall be submitted by August 1 following the first calendar half.

(ii) If the data reported in accordance with paragraphs (h)(1) through (h)(5) of this section were collected during the second calendar half, then the report shall be submitted by February 1 following the second calendar half.

(i) The owner or operator of an air curtain incinerator subject to the opacity limit under §60.56b shall submit the results of the initial opacity performance test and all subsequent annual performance tests recorded under paragraph (e) of this section. Annual performance tests shall be submitted by February 1 of the year following the year of the performance test.

(j) All reports specified under paragraphs (a), (b), (c), (f), (g), (h), and (i) of this section shall be submitted as a paper copy, postmarked on or before the submittal dates specified under these paragraphs, and maintained onsite as a paper copy for a period of 5 years.

(k) All records specified under paragraphs (d) and (e) of this section shall be maintained onsite in either paper copy or computer-readable format, unless an alternative format is approved by the Administrator.

(l) If the owner or operator of an affected facility would prefer a different annual or semiannual date for submitting the periodic reports required by paragraphs (g), (h) and (i) of this section, then the dates may be changed by mutual agreement between the owner or operator and the Administrator according to the procedures specified in §60.19(c) of subpart A of this part.

(m) Owners and operators who elect to continuously monitor particulate matter, cadmium, lead, mercury, or hydrogen chloride, or who elect to use continuous automated sampling systems for dioxin/furan or mercury emissions, instead of conducting performance testing using EPA manual test methods must notify the Administrator one month prior to starting or stopping use of the particulate matter, cadmium, lead, mercury, hydrogen chloride, and dioxin/furan continuous emission monitoring systems or continuous automated sampling systems.

(n) ***Additional recordkeeping and reporting requirements for affected facilities with continuous cadmium, lead, mercury, or hydrogen chloride monitoring systems.*** **In addition to complying with the requirements specified in paragraphs (a) through (m) of this section, the owner or operator of an affected source who elects to install a continuous emission monitoring system for cadmium, lead, mercury, or hydrogen chloride as specified in §60.58b(n), shall maintain the records in paragraphs (n)(1) through (n)(10) of this section and report the information in paragraphs (n)(11) through (n)(12) of this section, relevant to the continuous emission monitoring system:**

(1) All required continuous emission monitoring measurements (including monitoring data recorded during unavoidable continuous emission monitoring system breakdowns and out-of-control periods);

(2) The date and time identifying each period during which the continuous emission monitoring system was inoperative except for zero (low-level) and high-level checks;

(3) The date and time identifying each period during which the continuous emission monitoring system was out of control, as defined in §60.58b(o)(4);

(4) The specific identification (*i.e.* , the date and time of commencement and completion) of each period of excess emissions and parameter monitoring exceedances, as defined in the standard, that occurs during startups, shutdowns, and malfunctions of the affected source;

(5) The specific identification (*i.e.* , the date and time of commencement and completion) of each time period of excess emissions and parameter monitoring exceedances, as defined in the standard, that occurs during periods other than startups, shutdowns, and malfunctions of the affected source;

(6) The nature and cause of any malfunction (if known);

(7) The corrective action taken to correct any malfunction or preventive measures adopted to prevent further malfunctions;

(8) The nature of the repairs or adjustments to the continuous emission monitoring system that was inoperative or out of control;

(9) All procedures that are part of a quality control program developed and implemented for the continuous emission monitoring system under §60.58b(o);

(10) When more than one continuous emission monitoring system is used to measure the emissions from one affected source (*e.g.* , multiple breechings, multiple outlets), the owner or operator shall report the results as required for each continuous emission monitoring system.

(11) Submit to EPA for approval, the site-specific monitoring plan required by §60.58b(n)(13) and §60.58b(o), including the site-specific performance evaluation test plan for the continuous emission monitoring system required by §60.58(b)(o)(5). The owner or operator shall maintain copies of the site-specific monitoring plan on record for the life of the affected source to be made available for inspection, upon request, by the Administrator. If the site-specific monitoring plan is revised and approved, the owner or operator shall keep previous (*i.e.* , superseded) versions of the plan on record to be made available for inspection, upon request, by the Administrator, for a period of 5 years after each revision to the plan.

(12) Submit information concerning all out-of-control periods for each continuous emission monitoring system, including start and end dates and hours and descriptions of corrective actions taken, in the annual or semiannual reports required in paragraphs (g) or (h) of this section.

(o) ***Additional recordkeeping and reporting requirements for affected facilities with continuous automated sampling systems for dioxin/furan or mercury monitoring.*** **In addition to complying with the requirements specified in paragraphs (a) through (m) of this section, the owner or operator of an affected source who elects to install a continuous automated sampling system for dioxin/furan or mercury, as specified in §60.58b(p), shall maintain the records in paragraphs (o)(1) through (o)(10) of this section and report the information in (o)(11) and (o)(12) of this section, relevant to the continuous automated sampling system:**

(1) All required 24-hour integrated mercury concentration or 2-week integrated dioxin/furan concentration data (including any data obtained during unavoidable system breakdowns and out-of-control periods);

(2) The date and time identifying each period during which the continuous automated sampling system was inoperative;

(3) The date and time identifying each period during which the continuous automated sampling system was out of control, as defined in §60.58b(q)(4);

(4) The specific identification (*i.e.* , the date and time of commencement and completion) of each period of excess emissions and parameter monitoring exceedances, as defined in the standard, that occurs during startups, shutdowns, and malfunctions of the affected source;

(5) The specific identification (*i.e.* , the date and time of commencement and completion) of each time period of excess emissions and parameter monitoring exceedances, as defined in the standard, that occurs during periods other than startups, shutdowns, and malfunctions of the affected source;

(6) The nature and cause of any malfunction (if known);

(7) The corrective action taken to correct any malfunction or preventive measures adopted to prevent further malfunctions;

(8) The nature of the repairs or adjustments to the continuous automated sampling system that was inoperative or out of control;

(9) All procedures that are part of a quality control program developed and implemented for the continuous automated sampling system under §60.58b(q);

(10) When more than one continuous automated sampling system is used to measure the emissions from one affected source (*e.g.* , multiple breechings, multiple outlets), the owner or operator shall report the results as required for each system.

(11) Submit to EPA for approval, the site-specific monitoring plan required by §60.58b(p)(11) and §60.58b(q) including the site-specific performance evaluation test plan for the continuous emission monitoring system required by §60.58(b)(q)(5). The owner or operator shall maintain copies of the site-specific monitoring plan on record for the life of the affected source to be made available for inspection, upon request, by the Administrator. If the site-specific monitoring plan is revised and approved, the owner or operator shall keep previous (*i.e.* , superseded) versions of the plan on record to be made available for inspection, upon request, by the Administrator, for a period of 5 years after each revision to the plan.

(12) Submit information concerning all out-of-control periods for each continuous automated sampling system, including start and end dates and hours and descriptions of corrective actions taken in the annual or semiannual reports required in paragraphs (g) or (h) of this section.

[60 FR 65419, Dec. 19, 1995, as amended at 62 FR 45121, 45127, Aug. 25, 1997; 71 FR 27345, May 10, 2006]

Material Separation Plan and Related Information

Draft Materials Separation Plan

Dynamis Energy, LLC

May, 2011

PRELIMINARY

Dynamis Energy, LLC
776 E Riverside Dr. Ste. 150
Eagle, Idaho 83616
Phone Number – 208.938.2680

Table of Contents

PREFACE……. 1-1

INTRODUCTION…… 1-2

Fig. 1-1
Fig. 1-2
Fig. 1-3

WASTE SPEARATION PROCESS OVERVIEW ……2-1

Pre Dynamis Process 2-1
Process Overview..... 2-2
Major Components 2-3

MSW SERVICE AREA …….. 3-1

PROJECT GOALS AND APPROACH……...4-1

PUBLIC COMMENTS …….5-1

SUMMARY ……...……6-1

PRELIMINARY

Preface:

This Draft Materials Separation Plan (MSP) fulfills one of the requirements of Title 40 of the Code of Federal Regulations (CFR), Part 60, Subpart Eb, New Source Performance Standards (NSPS) (40 CFR 60.57b) for the facility.

The purpose of this Draft Materials Separation Plan (MSP) is to identify the goals and approaches for separating and recycling certain components of the Municipal Solid Waste (MSW) stream at the Waste-to-Energy (WTE) Facility in Ada County, Idaho in order to make the separated materials available for recycling.

The Code also prescribes a specific process that must be followed to ensure the opportunity for public review and comment on the Draft MSP. The process consists of the following:

- Preparation and issuance of a draft MSP for public comment.
- Notification of a public meeting for accepting oral and written comments on the draft MSP.
- Acceptance of written comments on the draft MSP.
- Preparation of written responses to public comments.
- Identification of the location(s) where written responses to public comment on the draft MSP will be available for inspection.
- Preparation of a Final Draft MSP, considering the public comments
- Make Final Draft MSP available to public. Take public comment at siting public meeting. Prepare Final MSP.
- Submission of the following to EPA and the Idaho Department of the Environmental (DEQ) as part of the facility's application for a permit to construct.
    - Copy of the notification of the public meeting.
    - Transcript of the public meeting.
    - Document summarizing responses to public comments.
    - Copies of both the draft and final MSPs.

PRELIMINARY

INTRODUCTION

Dynamis Energy, LLC (Dynamis) in conjunction with Ada County is developing and intends to build, own, and operate a renewable energy facility within the Ada County Landfill boundaries. This Ada County WTE Project (the "Project") will be located at 10300 Seaman's Gulch Rd, Ada County, ID, within the existing Ada County Landfill, to the south of the existing North Ravine Cell of the Ada County Landfill. The proposed Project is subject to 40 CFR Part 60 Subpart Eb. The area slated for the proposed Project is an existing excavated site, which was created by removing earth material to cap Municipal Solid Waste (MSW) in other areas within the landfill. The proposed facility is located at Latitude N43°42.33' and Longitude 116° 16.45'. The Project site will be re-graded to accommodate the required structures. The following location map depicts the project in reference to adjacent properties and features. The vicinity map also follows showing the regional context and vicinity in Ada County, Idaho.

The nominal, as delivered, heating value of MSW is expected to be 5,800 Btu/lb. Project will consist of a MSW fueled steam generator. The facility will consist of a MSW facility, gasified combustion boiler technology, and ancillary equipment to produce steam for the generation of electricity. The heat input of the steam generator is expected to be 121 million British Thermal Units per hour (MMBtu/hr). The Project will process 250 tons per day (tpd) of MSW supplied by Ada County. The Project is designed for a nominal net electrical output of 12 MW after supplying steam and electrical power to the facility.

Power supplied from the Project will be interconnected with the 138 kV transmission lines in Seaman's Gulch adjacent to the Dynamis facility. The Project will be equipped with a black start generator capable of starting the Project during times when the power grid is out of service. Either the black start generation or the local grid can be utilized to support operation of the facility if the power plant is out of service.

The MSW destroyed by the Project would have otherwise been deposited in the Ada County landfill. MSW will be diverted at the landfill gate/scales to the Project and will be placed on a tipping floor, inspected, and processed inside the facility building. Waste that cannot be processed, (primarily computers, auto batteries, appliances and scrap metal, and hazardous waste) will be returned to Ada County or sold for recycling.

This Project has no authority over or responsibility for the MSW collection activities or recycling programs currently maintained by Ada County, City of Boise, Meridian, Etc. Additionally, the Project will not impact or limit recycling activities, goals, or methodology that Ada County, City of Boise, Meridian, Star, Eagle, Garden City, and Kuna, may introduce in the future. As such, this MSP specifically addresses those activities associated with recycling and beneficial re-use of waste once the MSW has been diverted from a landfill cell and is delivered to the Project.

PRELIMINARY

FIGURE 1-1. ADA COUNTY AREA MAP -LOCATION

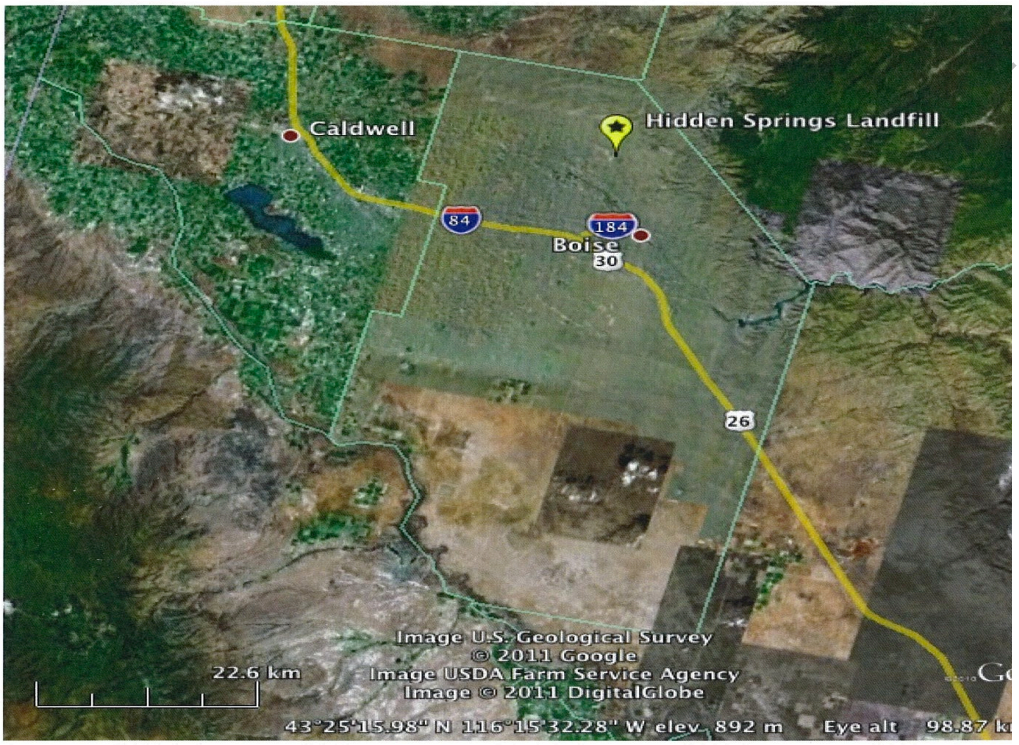

FIGURE 1-2. VICINITY MAP SHOWING THE PROJECT AREA

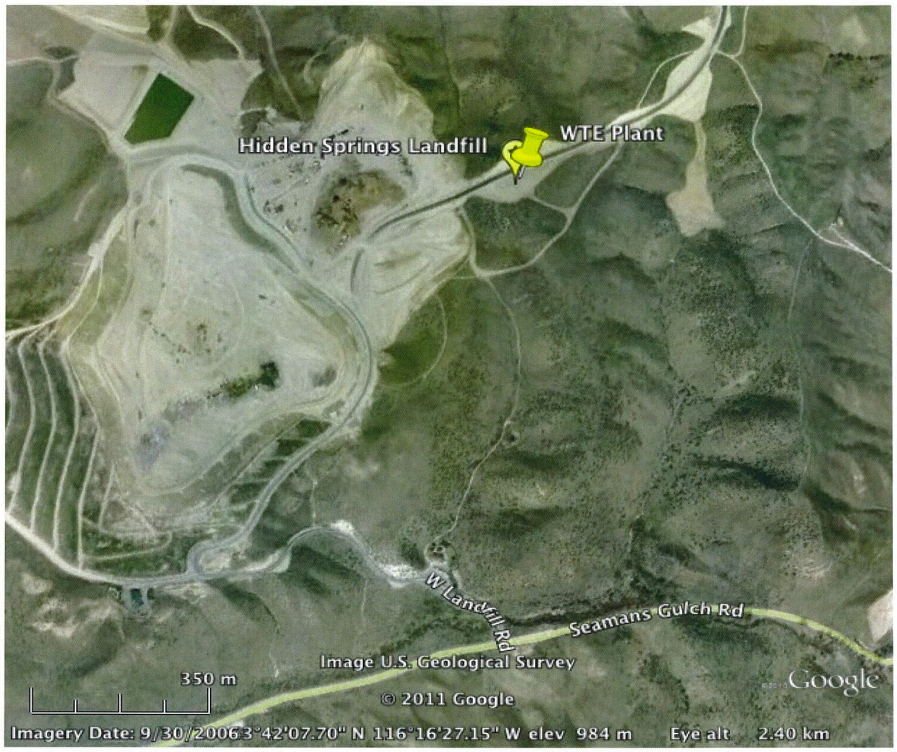

FIGURE 1-3. SITE WITHIN ADA COUNTY LANDFILL BOUNDRY MAP

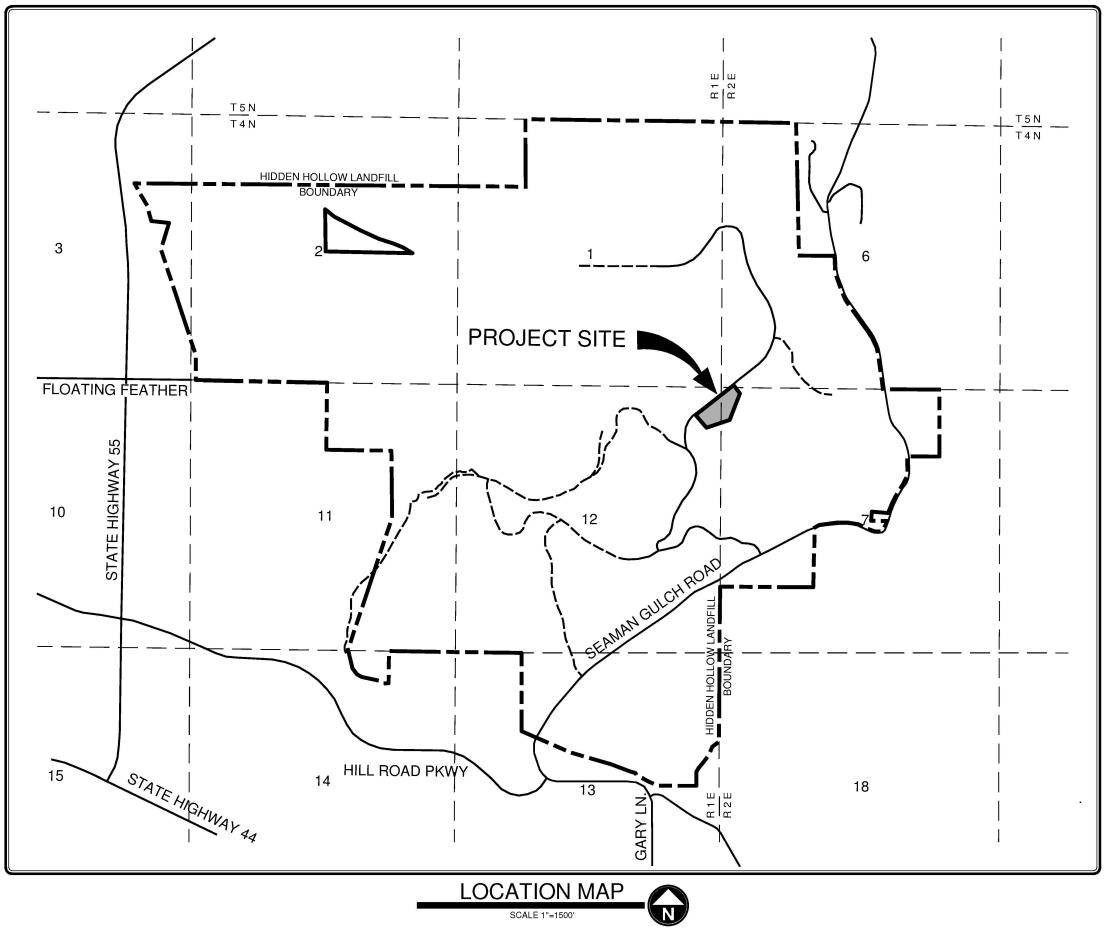

DYNAMIS PROJECT PROCESS OVERVIEW

Dynamis is developing and intends to build, own, and operate, a renewable energy project in Ada County, to be located within the existing property of the landfill. This section contains details on proposed equipment and operations used to remove materials to be recycled in the conversion of MSW to energy.

DYNAMIS PROCESS

The Dynamis 3.0 Thermal Conversion Process

Tipping Floor/Conveyor to Primary
The process begins by unloading MSW that has been screened and diverted to the Project by Ada County at the Landfill Gate/Scales. The MSW will be unloaded, directly from garbage trucks, onto the tipping floor. Any unacceptable material can be moved aside for proper disposal or recycled. Next the MSW is moved into the Primary Oxidation Chamber.

The Primary Gasification Chamber (PGC)
The process starts with untreated waste being bulk-loaded into the individual batch primary gasification chamber (PGC) through a hydraulically operated door at the top of the PGC. Once PGC is filled the door is sealed shut. A minimal amount of air is provided to allow sufficient combustion for heating to occur, typically 70 to 80 percent of the stoichiometric air requirement is allowed in the PGC. Due to the air controlled (starved) environment, the MSW gasifies and is converted to a super rich syn-gas. Gasification occurs in the PGC at relatively low temperatures of 450-550°C (800-1000°F), converting the MSW into gas and bottom ash. The syn-gases are then passed to the Secondary Combustion System.

The Secondary Combustion System (SCS)
Once the syn-gas is passed into the secondary combustion system (SCS), it is actively mixed with oxygen (taken from the ambient air). This mixing process is achieved by the use of a Turbulent Air Ring which flashes (combusts) the mixture at temperatures of 1030-1140°C (1,800-2000°F). The Turbulent Air Ring and temperature assure that a rapid and thorough mixture of the super rich gas and oxygen is achieved providing optimum conditions for the complete combustion of the syn-gases.

Boiler/Steam Production
The heat created in the secondary combustion system is directed through a high temperature power boiler where water is converted into high-pressure steam at 900 PSI 850° F.

The boilers will be configured as a fire tube, water tube or scotch high temp high-pressure firebox boiler of three-pass construction for highest thermal efficiency. The boiler will have an extended retention time design that provides maximum furnace volume, plus increased radiant surface for maximum heat absorption.

PRELIMINARY

Energy Production
This high pressure steam generated from the boiler is directed through a power generation turbine creating electrical power that will be routed to Idaho Power 138kv electrical transmission lines.

Emissions Control Equipment
Over the past 12+ years, independent third parties have run air quality tests. These 30+ tests have all determined that the Dynamis process meets and exceeds all state and local government emission regulations based upon those guidelines published by the US Government Environmental Protection Act.

Process Logic Control System
All aspects of combustion and fuel feed are monitored and controlled by a state-of-the-art logic which is monitoring the system & the process every 3 seconds. The microprocessor within the analyses data from various inputs such as switches, thermocouples, RTDs and oxygen sensors to continually monitor exhaust and optimize air-to-fuel mixture, which allows the system to automatically make any needed adjustments.

Reclamation
In the final step, Dynamis reclaim recyclables and bottom ash. After a gasification cycle in the PGC, the remaining material (5% of the original by weight) can be moved by conveyor belt where recyclable metals are separated and retained automatically. The end by-product of the gasification process is inert ash, which can be used as additive in concrete and cement based building materials.

PRELIMINARY

MSW SERVICE AREA

Dynamis is finalizing its contract with Ada County to process 250 ton of MSW per day for use in the Project. 250 tons of MSW per day represents approximately 15 – 20% of what is delivered to the Ada County Landfill on a daily basis (depending on daily and seasonal variations). In as much, the actual MSW service area is only the Ada County Landfill itself. The Project is not and will not be involved in the MSW collection process outside of the landfill area. This Project will not impact the MSW collection activities or recycling programs currently maintained by Ada County, City of Boise, Meridian, and other communities in Ada County. This MSP specifically addresses activities to promote recycling and beneficial re-use of waste once the MSW has been collected and delivered to the Project by others. For additional information on Ada County community current and future recycling plans, refer to:

http://curbit.cityofboise.org/PDF/CurbItHandbookwith2011Calendar.pdf.

http://www.Adaweb.net

http://merid.5iancity.org/sanitary_services.aspx?id=63

PRELIMINARY

PROJECT GOALS AND APPROACH

The primary goal of the Project is to generate electricity from a MSW that is diverted just prior to the deposition in the Ada County landfill. The Project will be designed so that the power generation process is conducted in an environmentally responsible manner. The Siting Plan, which will be completed and submitted for public review and comment, discusses environmental assessments of this site.

The Project will process MSW generated in Ada County, which otherwise would have been deposited in the landfill. MSW will be delivered to the Project by the existing collection vehicles, which will be diverted by the landfill authorities at the landfill scales. Ada County receives commercial and residential house-to-house curbside solid waste collection services from contracted waste haulers such as Allied Waste and Sanitary Services Company. Additionally, Ada collects MSW from the general public. Ada County does not accept a number of wastes in their house-to-house pick-up or disposal bins, including auto batteries, tires, construction and demolition debris, etc. A complete list of the items that Ada County does not accept as household waste is available at http://www.adaweb.net/SolidWasteManagement/WasteDiversionRecycling.aspx.

For items not accepted as household waste, Ada County, City of Boise, Meridian, has initiated and maintains a number of hazardous waste and recycling programs. These programs cover electronic waste, fluorescent bulbs, scrap metal and tires, aluminum cans, auto batteries, used motor oil, etc. Additional information of Ada's recycling programs is available at: http://www.adaweb.net/SolidWasteManagement/WasteDiversionRecycling.aspx.

The proposed Dynamis Project does not impact these existing programs or dictate recycling initiatives that Ada County, City of Boise, & Meridian may choose to introduce in the future.

The Ada County recycling programs allows for the collection of recycled material before being diverted to the Dynamis Facility. Once at the facility, the MSW is dumped on the tipping floor. Larger metal materials, computers, auto batteries, and appliances will be sorted for recycling before the rest of the MSW is placed in the primary chambers. Other recyclable metals will be sorted from the bottom ash of the primaries.

Ash will be approximately 5% of MSW by weight, some or all of this will be separated for the purpose of recycling or beneficially reused. A separator will remove the aluminum for recycling and magnetized equipment will remove the ferrous materials for recycling. The remaining ash will be crushed and disposed of in the landfill or alternatively marketed for additives in cement based material. The percent of recyclable metals in the ash will depend on the effectiveness and success of the material separation efforts by others before it gets to the Project. All of the material recycled from the ash is the material that would have gone into the landfill and not recycled.

The Ada County collection and recycling program makes efforts to prevent the delivery of unacceptable waste to Dynamis by the haulers. Dynamis must also use reasonable efforts to prevent the receipt of unacceptable waste at the Project site. Ada and Dynamis will develop a waste screening protocol to aid in these efforts. The protocol will include selective diversion at the scale of MSW

PRELIMINARY

hauler trucks, by Ada County, education materials, posted signs, and enforcement plans, all aimed at limiting the delivery of unacceptable waste to Dynamis.

Loads arriving for deposit are first screened by Ada County personnel at the scales. Any unacceptable (hazardous or separated recyclable) waste is rejected at this point and the vehicle is not allowed to proceed to the tipping area. Once a truck is directed at the scales to the Project, the truck contents will be unloaded on the Project tipping floor where it can be inspected. In the event hazardous waste is identified on the tipping floor, an effort is made to order the delivery vehicle to remove the waste. In the event the delivery vehicle is unable or unwilling to remove the waste, Dynamis will attempt to locate the generator of the unacceptable waste. If located, the generator is directed to remove the waste from the premises by the end of the day. If the waste is not removed by the end of the day, Dynamis will arrange for removal and proper disposal and bill the cost to the generator or the hauler. In cases where the unacceptable waste constitutes an imminent threat, Dynamis will notify proper State authorities and take appropriate action to immediately remove the material.

PRELIMINARY

PUBLIC COMMENTS

This Draft Materials Separation Plan is available for public review at the Eagle Public Library at 100 N. Stierman, Eagle, ID 83616 and the Boise Public Library at 715 S. Capitol Blvd., Boise, ID 83702 for a period of at least 30 days starting on May 27th, 2011. The Draft MSP is also available on Dynamis' website www.dynamisenergy.com. Following the end of the public review period on June 27th, 2011, Dynamis will host a public meeting to discuss the MSP on June 27th, 2011 at 1:30PM located at Capitol Business Center Conference Room at 776 E Riverside Dr. Ste. 200, Eagle, ID 83616. After the meeting Dynamis will review comments submitted, respond to those comments, and develop a Final Materials Separation Plan for submittal to the Environmental Protection Agency (EPA) and Idaho Department of Equality Air Quality (IDEQ).

Note that the review and public meeting regarding this Draft Material Separation Plan is separate and in addition to any public meetings required for the Siting Plan and by other regulatory authorities as applicable. The intent of this Draft MSP is to identify the methods and goals of the Project to increase recycling opportunities in the Territory. Other appropriate regulatory agencies will conduct their own review and public meetings as necessary to evaluate the full scope of the Project.

During the 30-day review period, comments can be submitted in writing to:

Dynamis Energy, LLC
Attention: Doyle Pergande
776 E Riverside Dr. Ste. 150
Eagle, ID 83616

Additionally, comments can be submitted via email at msp@dynamisenergy.com

PRELIMINARY

SUMMARY

The MSP has been prepared to comply with 40 CFR Park 60 Subpart Eb. Most of the material separation is accomplished by Ada County and or the communities within Ada County as it is collected before it gets released to the Dynamis WTE Plant at the Ada County Landfill.

Dynamis operations of the WTE Plant cannot and does not intend to impact the existing or future programs for recycling carried out by these communities. There will be some minor separation of materials for recycling such as larger metal items, auto batteries, and computers prior to loading the remaining MSW into the primaries. Additional recycling of metallic materials will occur by processing the bottom ash which could amount up to 5% of the MSW received at the WTE Facility.

PRELIMINARY

Ada County and Dynamis Energy, LLC Plans Public Meeting

Ada County and Dynamis Energy, LLC will hold an informational meeting in accordance with Idaho regulations on June 27th at 1:30 PM at the Capitol Business Center Conference Room located at 776 E Riverside Dr. Ste. 200, Eagle, ID 83616

Copies of the Draft Materials Separations Plan are available for public review at the following public libraries during normal business hours.

Boise Public Library
715 S. Capitol Blvd.
Boise, ID 83702
Hours: M-TH 10AM-9PM, F 10AM-6PM, SAT 10AM-5PM, SUN Noon-5PM

Eagle Public Library
100 N. Stierman Way
Eagle, Idaho 83616
Hours: M/F 9AM-6PM, T/W 9AM-8PM, TH 11AM-8PM, SAT 11AM-5PM

Additionally the Draft Material Separations Plan can be found on the Dynamis Energy Website at http://www.dynamisenergy.com

The Agenda for the meeting consists of: Public Meeting for Draft Materials Separation Plan for Ada County Landfill Waste to Energy Facility.

1) Introduction of Project
2) Overview of the process for the Material Separation Plan
3) Service area involved
4) Types and amounts of materials proposed for separation
5) Methods of separation
6) Residual waste disposal
7) Where and when the Final Draft Materials Separation Plan and responses to the public comments will be available for public inspection
8) Public Comments (written or verbal) received

The purpose of the meeting will be to discuss the Materials Separation Plan in regards to building and operating a new Waste-To-Energy facility at the Ada County Landfill located in Section 12, T4NR1E BM & Section 7, T4N, R2E BM in Ada County, Idaho

The Public Comment Period Begins on May 27, 2011 and will end on June 27, 2011. Public Comments may be provided at the Public Hearing or via mail to Mr. Doyle Pergande, Dynamis Energy, LLC, 776 E Riverside Drive, Ste. 150, Eagle, ID 83616 or emailed to doyle@dynamisenergy,com.

MINUTES OF PUBLIC HEARING
DRAFT MATERIAL SEPARATION PLAN
WASTE TO ENERGY FACILITY
ADA COUNTY LANDFILL

June 27, 2011

Time and place of meeting

The Public Hearing to discuss the preliminary Draft Material Separation Plan for the Waste to Energy Facility (the "Project") being proposed by Dynamis Energy, LLC (the "Company") to be located at the Ada County landfill was held at 776 East Riverside Drive, Eagle Idaho on June 27th, 2011 at 1:30 P.M. The following representatives of the Company were in attendance: C. Lloyd Mahaffey (Chairman and CEO), John Johnson (SVP and COO), Wade Thomas (VP and General Counsel), and Doyle Pergande (Senior Engineer). Other attendees signed the "sign up sheet" which is attached hereto.

I. Draft Material Separation Plan

Doyle Pergande presented a PowerPoint presentation (see attached) and reviewed the Agenda for the Public Hearing and the timing of questions related to the subject matter of the Hearing. Pergande noted that the hearing was only for discussion related to the Material Separation Plan and that a separate hearing would be held for the siting analysis. Pergande reviewed the overall project including the location of the project, the overall process utilized by the project, and the resulting power production from the project. Pergande discussed the purpose of the Material Separation Plan. Pergande reviewed the regulatory process and timing related to the Material Separation Plan.

In addition, Pergande reviewed the service area for the Project. He discussed the types and amounts of materials that will be separated on the tipping floor prior to being processed within the system as well as what will happen to the ferrous metals and aluminum remaining in the ash after processing. Pergande reviewed the methods of material separation that will be utilized at the Project. He then discussed what happens with the residual waste produced by the Project, including the alternative disposal methods related to the residual waste.

Pergande provided the information as to the location in which the Final Draft Material Separation Plan will be posted for additional public review.

II. Public Comment

Pergande opened the hearing for public comment/questions. Tyler Gillman, President of the Hidden Springs homeowners association, questioned the visibility of the Project with regard to the Hidden Spring subdivisions as well as the pollutants that will be produced by the Project. A general discussion ensued about the same. Colton Tibbets

of Allied Waste questioned the difference between gasification and burning as well as the likelihood of fires on the tipping floor.

Hubert Osborne inquired as to the handling of hazardous waste and the distinction between what is done at the County landfill, as opposed to what will be performed at the Project. A general discussion ensured about the same. Steve Sedlacek of Sanitary Services commented on the applicability of 40 CFR and the handling of hazardous waste. He also inquired as to the status of the professional services contract in place between the Company and Ada County. A general discussion ensued regarding roll off trucks, medical waste, radioactive waste, and the service area of the Hidden Hollow Landfill.

There being no further comments, Pergande adjourned the Public Hearing.

Final Draft Materials Separation Plan

Dynamis Energy, LLC

March, 2012

Dynamis Energy, LLC
776 E Riverside Dr. Ste. 150
Eagle, Idaho 83616
Phone Number – 208.938.2680

Table of Contents

PREFACE……. 1-1

INTRODUCTION…… 1-2

Fig. 1-1
Fig. 1-2
Fig. 1-3

WASTE SPEARATION PROCESS OVERVIEW ……2-1

Pre Dynamis Process 2-1
Process Overview..... 2-2
Major Components 2-3

MSW SERVICE AREA ……... 3-1

PROJECT GOALS AND APPROACH……...4-1

PUBLIC COMMENTS …….5-1

SUMMARY ……...…….6-1

Preface:

This Draft Materials Separation Plan (MSP) fulfills one of the requirements of Title 40 of the Code of Federal Regulations (CFR), Part 60, Subpart Eb, New Source Performance Standards (NSPS) (40 CFR 60.57b) for the facility.

The purpose of this Draft Materials Separation Plan (MSP) is to identify the goals and approaches for separating and recycling certain components of the Municipal Solid Waste (MSW) stream at the Waste-to-Energy (WTE) Facility in Ada County, Idaho in order to make the separated materials available for recycling.

The Code also prescribes a specific process that must be followed to ensure the opportunity for public review and comment on the Draft MSP. The process consists of the following:

- Preparation and issuance of a draft MSP for public comment.
- Notification of a public meeting for accepting oral and written comments on the draft MSP.
- Acceptance of written comments on the draft MSP.
- Preparation of written responses to public comments.
- Identification of the location(s) where written responses to public comment on the draft MSP will be available for inspection.
- Preparation of a Final Draft MSP, considering the public comments
- Make Final Draft MSP available to public. Take public comment at siting public meeting. Prepare Final MSP.
- Submission of the following to EPA and the Idaho Department of the Environmental (DEQ) as part of the facility's application for a permit to construct.
    - Copy of the notification of the public meeting.
    - Transcript of the public meeting.
    - Document summarizing responses to public comments.
    - Copies of both the draft and final MSPs.

INTRODUCTION

Dynamis Energy, LLC (Dynamis) in conjunction with Ada County is developing and intends to build, own, and operate a renewable energy facility within the Ada County Landfill boundaries. This Ada County WTE Project (the "Project") will be located at 10300 Seaman's Gulch Rd, Ada County, ID, within the existing Ada County Landfill, to the south of the existing North Ravine Cell of the Ada County Landfill. The proposed Project is subject to 40 CFR Part 60 Subpart Eb. The area slated for the proposed Project is an existing excavated site, which was created by removing earth material to cap Municipal Solid Waste (MSW) in other areas within the landfill. The proposed facility is located at Latitude N43°42.33' and Longitude 116° 16.45'. The Project site will be re-graded to accommodate the required structures. The site is visible to one, potentially two homes located on the foothills above the Hidden Springs subdivisions. The following location map depicts the project in reference to adjacent properties and features. The vicinity map also follows showing the regional context and vicinity in Ada County, Idaho.

The nominal, as delivered, heating value of MSW is expected to be 5,800 Btu/lb. Project will consist of a MSW fueled steam generator. The facility will consist of a MSW facility, gasified combustion boiler technology, and ancillary equipment to produce steam for the generation of electricity. The heat input of the steam generator is expected to be 121 million British Thermal Units per hour (MMBtu/hr). The Project will process 408 tons per day (tpd) of MSW supplied by Ada County. The Project is designed for a nominal net electrical output of 12 MW after supplying steam and electrical power to the facility.

Power supplied from the Project will be interconnected with the 138 kV transmission lines in Seaman's Gulch adjacent to the Dynamis facility. The Project will be equipped with a black start generator capable of starting the Project during times when the power grid is out of service. Either the black start generation or the local grid can be utilized to support operation of the facility if the power plant is out of service.

The MSW destroyed by the Project would have otherwise been deposited in the Ada County landfill. MSW will be diverted at the landfill gate/scales to the Project and will be placed on a tipping floor, inspected, and processed inside the facility building. Waste that cannot be processed (primarily computers, auto batteries, appliances and scrap metal, and hazardous waste) will be returned to Ada County or sold for recycling.

This Project has no authority over or responsibility for the MSW collection activities or recycling programs currently maintained by Ada County, City of Boise, Meridian, Etc. Additionally, the Project will not impact or limit recycling activities, goals, or methodology that Ada County, City of Boise, Meridian, Star, Eagle, Garden City, and Kuna, may introduce in the future. As such, this MSP specifically addresses those activities associated with recycling and beneficial re-use of waste once the MSW has been diverted from a landfill cell and is delivered to the Project. Once delivered and placed on the tipping floor, a separation of metals and any possible hazardous waste which was not previously detected will be separated and sent back to the County.

FIGURE 1-1. ADA COUNTY AREA MAP -LOCATION

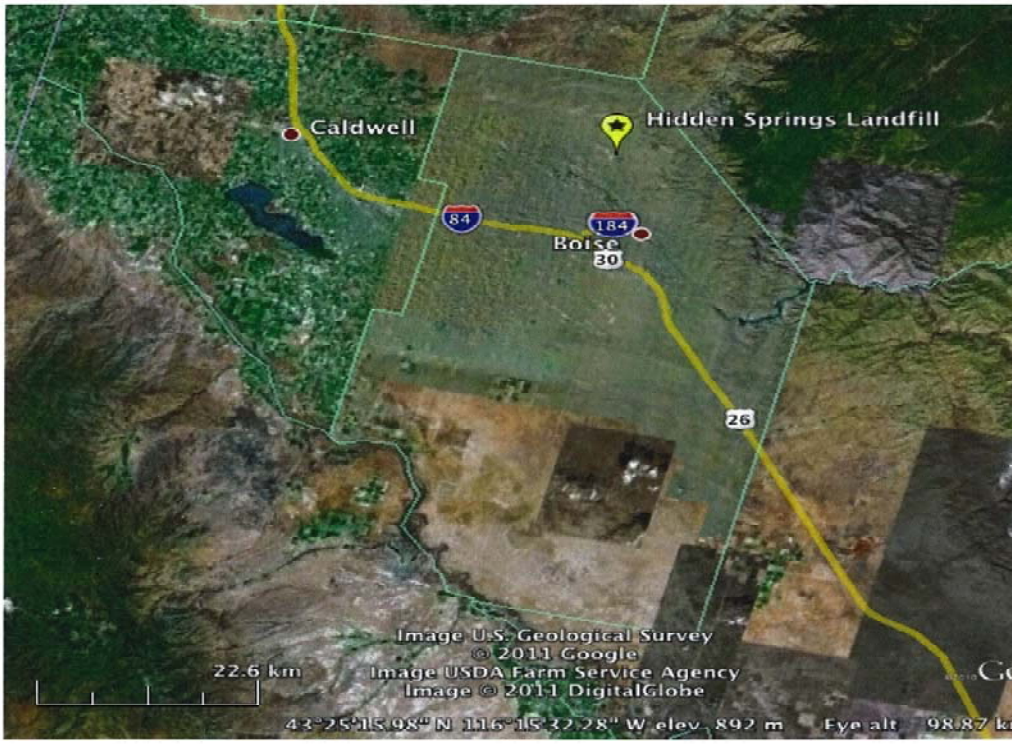

FIGURE 1-2. VICINITY MAP SHOWING THE PROJECT AREA

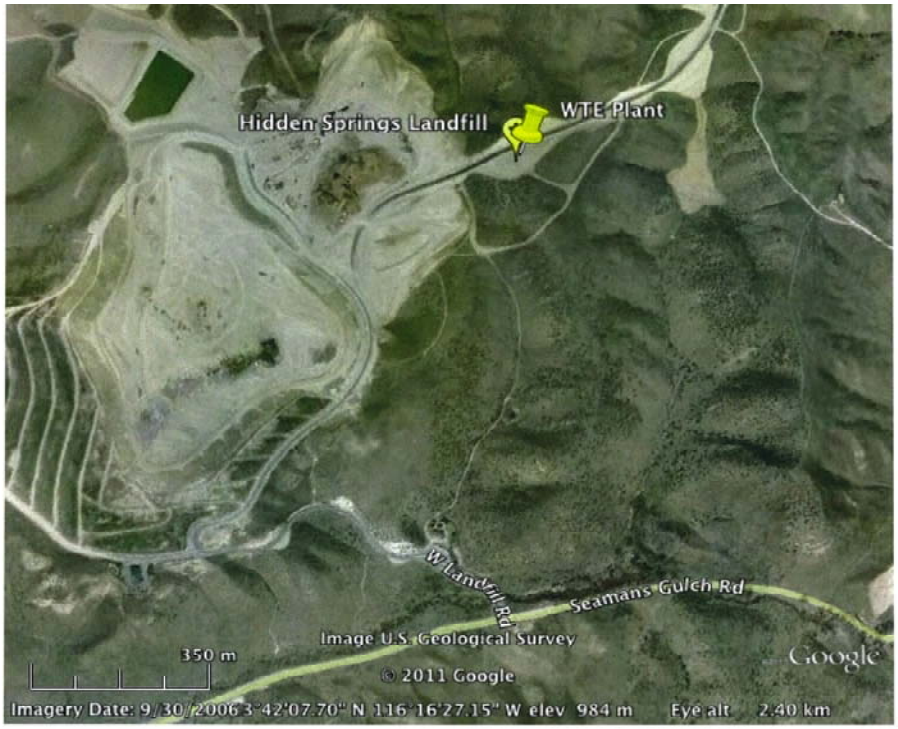

FIGURE 1-3. SITE WITHIN ADA COUNTY LANDFILL BOUNDRY MAP

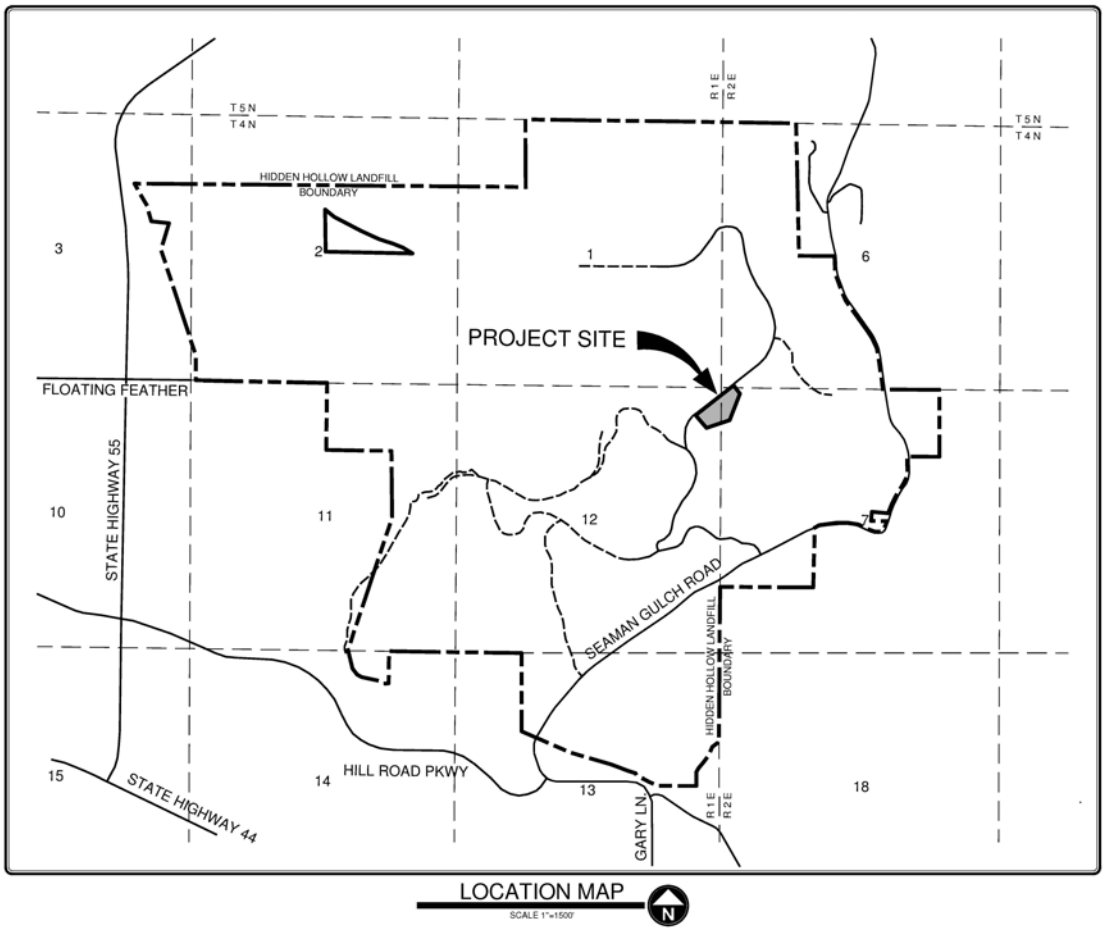

DYNAMIS PROJECT PROCESS OVERVIEW

Dynamis is developing and intends to build, own, and operate, a renewable energy project in Ada County, to be located within the existing property of the landfill. This section contains details on proposed equipment and operations used to remove materials to be recycled in the conversion of MSW to energy.

DYNAMIS PROCESS

The Dynamis 3.0 Thermal Conversion Process differs from incineration in that minimal oxygen is allowed into the Chambers while gasifying. It achieves almost an oxygen-starved atmosphere during the process. Therefore, during high temperatures there is a coaxing atmosphere that while very hot, it is free of flames or fire.

Tipping Floor/Conveyor to Primary
The process begins by unloading MSW that has been screened and diverted to the Project by Ada County at the Landfill Gate/Scales. The MSW will be unloaded, directly from garbage trucks, onto the tipping floor. Any unacceptable or hazardous material can be moved aside for proper disposal or recycled. In the random event that a fire should start on the tipping floor, permitted and approved sprinklers will initiate and conveniently positioned fire extinguishers are easily accessible. As well, there is personnel on-site 24 hours. Next the MSW is moved into the Primary Oxidation Chamber.

The Primary Gasification Chamber (PGC)
The process starts with untreated waste being bulk-loaded into the individual batch primary gasification chamber (PGC) through a hydraulically operated door at the top of the PGC. Once PGC is filled the door is sealed shut. A minimal amount of air is provided to allow sufficient combustion for heating to occur, typically 70 to 80 percent of the stoichiometric air requirement is allowed in the PGC. Due to the air controlled (starved) environment, the MSW gasifies and is converted to a super rich syn-gas. Gasification occurs in the PGC at relatively low temperatures of 450-550°C (800-1000°F), converting the MSW into gas and bottom ash. The syn-gases are then passed to the Secondary Combustion System. Due to the lower temperatures in the Primary Chamber, no particulates are created and those that already exist and/or remain after the primary processing will be completely combusted at higher temperatures in the Secondary Combustion System.

The Secondary Combustion System (SCS)
Once the syn-gas is passed into the secondary combustion system (SCS), it is actively mixed with oxygen (taken from the ambient air). This mixing process is achieved by the use of a Turbulent Air Ring which flashes (combusts) the mixture at temperatures of 1030-1140°C (1,800-2000°F). The Turbulent Air Ring and temperature assure that a rapid and thorough mixture of the super rich gas and oxygen is achieved providing optimum conditions for the complete combustion of the syn-gases.

Boiler/Steam Production
The heat created in the secondary combustion system is directed through a high temperature power boiler where water is converted into high-pressure steam at 900 PSI 850° F.

The boilers will be configured as a fire tube, water tube or scotch high temp high-pressure firebox boiler of three-pass construction for highest thermal efficiency. The boiler will have an extended

retention time design that provides maximum furnace volume, plus increased radiant surface for maximum heat absorption.

Energy Production

This high pressure steam generated from the boiler is directed through a power generation turbine creating electrical power that will be routed to Idaho Power 138kv electrical transmission lines.

Emissions Control Equipment

Over the past 12+ years, independent third parties have run air quality tests. These 30+ tests have all determined that the Dynamis process meets and exceeds all state and local government emission regulations based upon those guidelines published by the US Government Environmental Protection Act.

Process Logic Control System

All aspects of combustion and fuel feed are monitored and controlled by a state-of-the-art logic which is monitoring the system & the process every 3 seconds. The microprocessor within the analyses data from various inputs such as switches, thermocouples, RTDs and oxygen sensors to continually monitor exhaust and optimize air-to-fuel mixture, which allows the system to automatically make any needed adjustments.

Reclamation

In the final step, Dynamis reclaim recyclables and bottom ash. After a gasification cycle in the PGC, the remaining material (5% of the original by weight) can be moved by conveyor belt where recyclable metals are separated and retained automatically. The end by-product of the gasification process is inert ash, which can be used as additive in concrete and cement based building materials.

MSW SERVICE AREA

Dynamis is finalizing its contract with Ada County to process 408 tons of MSW per day for use in the Project. 408 tons of MSW per day represents approximately 30 – 40% of what is delivered to the Ada County Landfill on a daily basis (depending on daily and seasonal variations). In as much, the actual MSW service area is only the Ada County Landfill itself. The Project is not and will not be involved in the MSW collection process outside of the landfill area. This Project will not impact the MSW collection activities or recycling programs currently maintained by Ada County, City of Boise, Meridian, and other communities in Ada County. This MSP specifically addresses activities to promote recycling and beneficial re-use of waste once the MSW has been collected and delivered to the Project by others. For additional information on Ada County community current and future recycling plans, refer to:

http://curbit.cityofboise.org/PDF/CurbItHandbookwith2011Calendar.pdf.

http://www.Adaweb.net

http://merid.5iancity.org/sanitary_services.aspx?id=63

PROJECT GOALS AND APPROACH

The primary goal of the Project is to generate electricity from a MSW that is diverted just prior to the deposition in the Ada County landfill. The Project will be designed so that the power generation process is conducted in an environmentally responsible manner. The Siting Plan, which will be completed and submitted for public review and comment, discusses environmental assessments of this site.

The Project will process MSW generated in Ada County, which otherwise would have been deposited in the landfill. MSW will be delivered to the Project by the existing collection vehicles, which will be diverted by the landfill authorities at the landfill scales. Ada County receives commercial and residential house-to-house curbside solid waste collection services from contracted waste haulers such as Allied Waste and Sanitary Services Company. Additionally, Ada collects MSW from the general public. Ada County does not accept a number of wastes in their house-to-house pick-up or disposal bins, including auto batteries, tires, construction and demolition debris, etc. A complete list of the items that Ada County does not accept as household waste is available at http://www.adaweb.net/SolidWasteManagement/WasteDiversionRecycling.aspx.

For items not accepted as household waste, Ada County, City of Boise, Meridian, has initiated and maintains a number of hazardous waste and recycling programs. These programs cover electronic waste, fluorescent bulbs, scrap metal and tires, aluminum cans, auto batteries, used motor oil, etc. Additional information of Ada's recycling programs is available at: http://www.adaweb.net/SolidWasteManagement/WasteDiversionRecycling.aspx.

The proposed Dynamis Project does not impact these existing programs or dictate recycling initiatives that Ada County, City of Boise, & Meridian may choose to introduce in the future.

The Ada County recycling programs allows for the collection of recycled material before being diverted to the Dynamis Facility. Once at the facility, the MSW is dumped on the tipping floor. Larger metal materials, computers, auto batteries, and appliances will be sorted for recycling before the rest of the MSW is placed in the primary chambers. Other recyclable metals will be sorted from the bottom ash of the primaries.

Ash will be approximately 5% of MSW by weight, some or all of this will be separated for the purpose of recycling or beneficially reused. A separator will remove the aluminum for recycling and magnetized equipment will remove the ferrous materials for recycling. The remaining ash will be crushed and disposed of in the landfill or alternatively marketed for additives in cement-based material. The percent of recyclable metals in the ash will depend on the effectiveness and success of the material separation efforts by others before it gets to the Project. All of the material recycled from the ash is the material that would have gone into the landfill and not recycled.

The Ada County collection and recycling program makes efforts to prevent the delivery of unacceptable waste to Dynamis by the haulers. Dynamis must also use reasonable efforts to prevent the receipt of unacceptable waste at the Project site. Ada and Dynamis will develop a waste screening protocol to aid in these efforts. The protocol will include selective diversion at the scale of MSW hauler trucks, by Ada County, education materials, posted signs, and enforcement plans, all aimed at

limiting the delivery of unacceptable waste to Dynamis.

Ada County personnel at the scales first screen loads arriving for deposit. Any unacceptable (hazardous or separated recyclable) waste is rejected at this point and the vehicle is not allowed to proceed to the tipping area. Once a truck is directed at the scales to the Project, the truck contents will be unloaded on the Project tipping floor where it can be inspected. In the event hazardous waste is identified on the tipping floor, an effort is made to order the delivery vehicle to remove the waste. In the event the delivery vehicle is unable or unwilling to remove the waste, Dynamis will attempt to locate the generator of the unacceptable waste. If located, the generator is directed to remove the waste from the premises by the end of the day. If the waste is not removed by the end of the day, Dynamis will arrange for removal and proper disposal and bill the cost to the generator or the hauler. In cases where the unacceptable waste constitutes an imminent threat, Dynamis will notify proper State authorities and take appropriate action to immediately remove the material.

PUBLIC COMMENTS

This Draft Materials Separation Plan is available for public review at the Eagle Public Library at 100 N. Stierman, Eagle, ID 83616 and the Boise Public Library at 715 S. Capitol Blvd., Boise, ID 83702 for a period of at least 30 days starting on March 5, 2012. The Draft MSP is also available on Dynamis' website www.dynamisenergy.com.

SUMMARY

The MSP has been prepared to comply with 40 CFR Park 60 Subpart Eb. Most of the material separation is accomplished by Ada County and or the communities within Ada County as it is collected before it gets released to the Dynamis WTE Plant at the Ada County Landfill.

Dynamis operations of the WTE Plant cannot and does not intend to impact the existing or future programs for recycling carried out by these communities. There will be some minor separation of materials for recycling such as larger metal items, auto batteries, and computers prior to loading the remaining MSW into the primaries. Additional recycling of metallic materials will occur by processing the bottom ash, which could amount up to 5% of the MSW received at the WTE Facility.

Ada County and Dynamis Energy, LLC Plans Public Meeting

Ada County and Dynamis Energy, LLC will hold an informational meeting in accordance with Idaho regulations on April 4th at 1:30 PM at the Capitol Business Center Conference Room located at 776 E Riverside Dr. Ste. 200, Eagle, ID 83616

Copies of the Final Materials Separations Plan and Siting Analysis are available for public review at the following public libraries during normal business hours.

Boise Public Library
715 S. Capitol Blvd.
Boise, ID 83702
Hours: M-TH 10AM-9PM, F 10AM-6PM, SAT 10AM-5PM, SUN Noon-5PM

Eagle Public Library
100 N. Stierman Way
Eagle, Idaho 83616
Hours: M/F 9AM-6PM, T/W 9AM-8PM, TH 11AM-8PM, SAT 11AM-5PM

Additionally the Final Material Separations Plan and Siting Analysis can be found on the Dynamis Energy Website at http://www.dynamisenergy.com

The Agenda for the meeting consists of: Public Meeting for Final Materials Separation Plan and Siting Analysis for Ada County Landfill Waste to Energy Facility.

1) Introduction of Project
2) Location/visibility discussion
3) Soils discussion
4) Vegetation discussion
5) Air quality discussion
6) Material separation plan discussion
8) Public Comments (written or verbal) received

The purpose of the meeting will be to discuss the Siting Analysis and Materials Separation Plan in regards to building and operating a new Waste-To-Energy facility at the Ada County Landfill located in Section 12, T4NR1E BM & Section 7, T4N, R2E BM in Ada County, Idaho

The Public Comment Period Begins on March 6th, 2012 and will end on April 4th, 2012. Public Comments may be provided at the Public Hearing or via mail to Mr. Doyle Pergande, Dynamis Energy, LLC, 776 E Riverside Drive, Ste. 150, Eagle, ID 83616 or emailed to publiccomments@dynamisenergy.com.

APPENDIX D

Process Flow Diagram

GENERAL NOTES:

A. FOR PROJECT NOTES & SPECIFICATIONS SEE DRAWING #1102-01-G-1002021 & 1002022.
B. DESUPERHEATING NOT SHOWN FOR CLARITY.

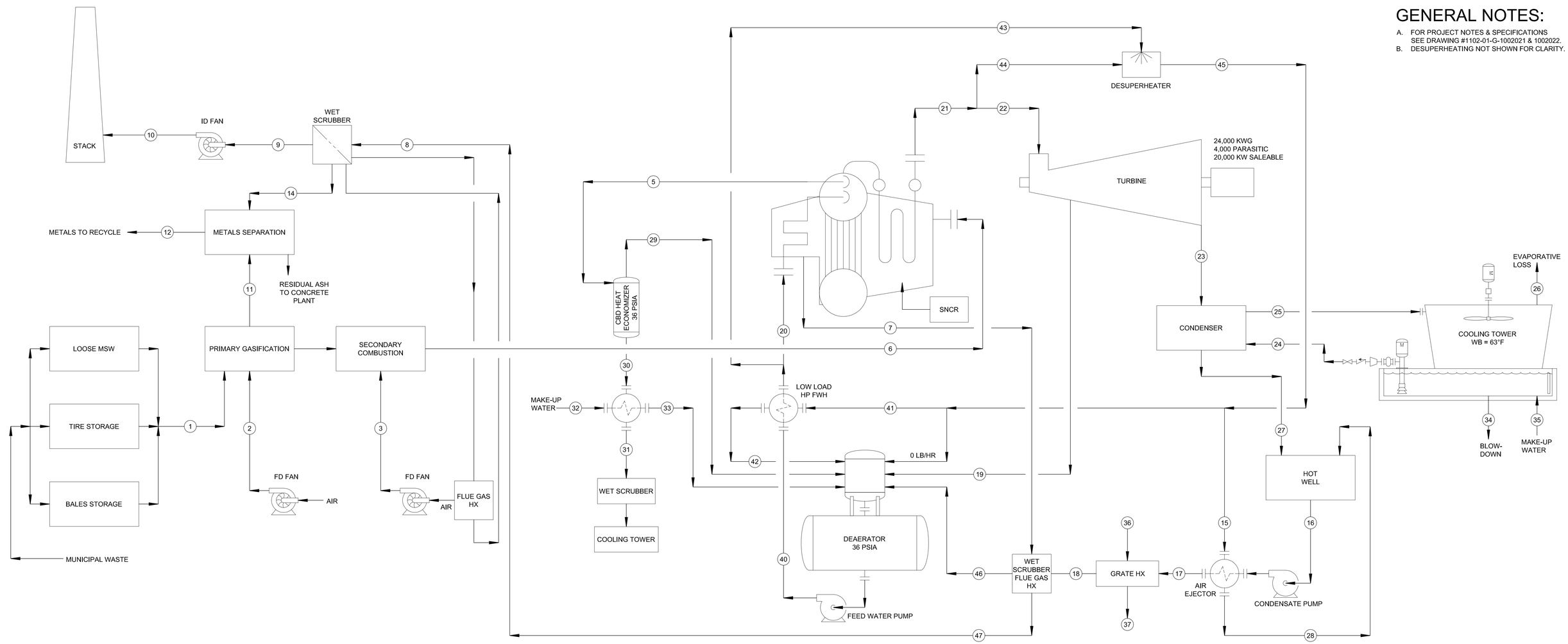

STREAM NUMBER	1	2	3	4	5	6	7	8	9	10	11	12	13	14	15	16	17	18	19	20	21	22	23	24	25	26	27	28	29	30	31	32	33	34	35	36	37	38	39
DESCRIPTION	PLANT FEED	PRIMARY AIR	SECON-DARY AIR	NOT USED	BOILER BLOW-DOWN	COMB-USTION GAS	FLUE GAS HOT	AIR FILTER INLET	AIR FILTER OUTLET	EXHAUST GAS	PRIMARY ASH	SEPA-RATED METALS	NOT USED	AIR PARTIC-ULATES	AIR EJECTOR STEAM	CONDE-NSATE	GRATE HEAT FEED	FLUE GAS HX FEED	EXTRA-CTION STEAM	BOILER FEED	BOILER STEAM	STEAM TO TURBINE THROTTLE	TURBINE EXHAUST	COOLING WATER SUPPLY (GPM)	COOLING WATER RETURN (GPM)	EVAPO-RATIVE LOSS (GPM)	COND-ENSER OUTLET	AIR EJECTOR CONDE-NSATE	FLASH STEAM	BLOW-DOWN HOT	BLOW-DOWN COLD	BOILER MAKE-UP COLD	BOILER MAKE-UP HOT	CT BLOW-DOWN (GPM)	CT MAKE-UP (GPM)	GRATE WATER SUPPLY (GPM)	GRATE WATER RETURN (GPM)	SNCR	
PHASE (S,L,V)	S	V	V	-	L	V	V	V	V	V	S	S	-	S	V	L	L	L	V	L	V	V	V	L	L	V	L	L	V	L	L	L	L	L	L	L	L	S	-
TEMP (°F)	80	80	80	-	538	X	350	-	-	-	X	-	-	-	365	103	105	116	305	261	825	825	102	71	96	-	102	365	305	262	121	60	201	-	-	250	129	-	-
PRESS (PSIA)	14.7	14.7	14.7	-	940	-	-	-	-	-	-	-	-	-	165	14.7	-	-	36	1140	915	915	1	-	-	-	1	165	36	36	-	-	-	-	-	-	-	-	-
ENTHALPY (BTU/LBM)	5800	-	-	-	533	-	-	-	-	-	-	-	-	-	1196	71	74	84	1189	230	1414	1414	1004	-	-	-	70	339	1168	230	89	28	169	-	-	-	-	-	-
MASS FLOW (LBM/HR)	51,013	-	-	-	4117	X	460,000	-	-	-	X	-	-	-	800	200,774	200,774	200,774	5,205	209,949	205,832	205,179	199,974	-	-	-	199,974	800	1330	2787	2787	2787	2787	-	-	-	-	-	-
VOLUME FLOW (ACFM)	-	-	-	-	-	X	-	-	-	-	-	-	-	-	-	-	-	-	-	-	-	-	-	15,303		301	-	-	-	-	-	-	-	72	373	34		-	-
VOLUME FLOW (SCFM)	-	X	X	-	-	X	-	-	-	-	-	-	-	-	-	-	-	-	-	-	-	-	-	-	-	-	-	-	-	-	-	-	-	-	-	-	-	-	-

STREAM NUMBER	40	41	42	43	44	45	46	47
DESCRIPTION	DEAER-ATOR OUTLET	STEAM TO FWH	FWH CONDE-NSATE	WATER TO DESUPE-RHEATER	STEAM TO DESUPE-RHEATER	DESUPE-RHEATER OUTLET	DEAER-ATOR FEED	FLUE GAS COLD
PHASE (S,L,V)	L	V	L	L	V	V	L	V
TEMP (°F)	261	365	365	261	825	365	232	142
PRESS (PSIA)	1140	165	165	1140	915	165	-	-
ENTHALPY (BTU/LBM)	230	1196	339	230	1414	1196	200	-
MASS FLOW (LBM/HR)	210,096	0	0	147	653	800	200,774	460,000
VOLUME FLOW (ACFM)	-	-	-	-	-	-	-	-
VOLUME FLOW (SCFM)	-	-	-	-	-	-	-	-

REVISION IN PROGRESS
05 Apr 12 – 01:31 pm

NO.	REVISIONS	BY	DATE
D	RENUMBERED AND UPDATED	JRM	4/5/12
C	ISSUED FOR NOT TO EXCEED BUDGET	BEH	3/23/12
B	FOR REFERENCE ONLY	DTS	1/9/12
A	FOR REFERENCE ONLY	NGJ	12/29/11

ADA COUNTY, IDAHO

EVERGREEN ENGINEERING
Engineering and Construction Services
EUGENE, OREGON
(541) 484-4771 FAX: (541) 484-6759
www.evergreenengineering.com

EE JOB NUMBER: 2540.1
CKD:
APP: JP
EE DRAWING NUMBER: 1102-04-F-1002047
CAD FILE: 1102-04-F-1002047.dwg

UNLESS OTHERWISE SPECIFIED DIMENSIONS ARE IN INCHES
TOLERANCES ARE:

DECIMAL		WELD ± 1/32
.X	±.1	CHAMFERS ±5°
.XX	±.02	ANGLES ±1°
.XXX	±.005	CAST ±1/8
FRACTIONS ±1/16		
THIRD ANGLE PROJECTION		

DRAWN	DS	12/05/11
CHECKED		
QA		
MFG		
APPROVED	JP	
MATERIAL	SEE TABLE	FINISH N/A

DYNAMIS ENERGY

Dynamis Energy LLC,
776 E. Riverside Dr. Ste. 150
Eagle, ID 83616

TITLE
408T WASTE TO ENERGY FACILITY
HEAT BALANCE FLOW DIAGRAM
32 MMBTU/HR FLUE GAS HX

SIZE	DWG NO	REV
D	1102-04-F-1002047	D

SCALE: NONE
SHEET 1 OF 1

GENERAL NOTES:

A. FOR PROJECT NOTES & SPECIFICATIONS SEE DRAWING #1102-01-G-1002021 & 1002022.
B. DESUPERHEATING NOT SHOWN FOR CLARITY.

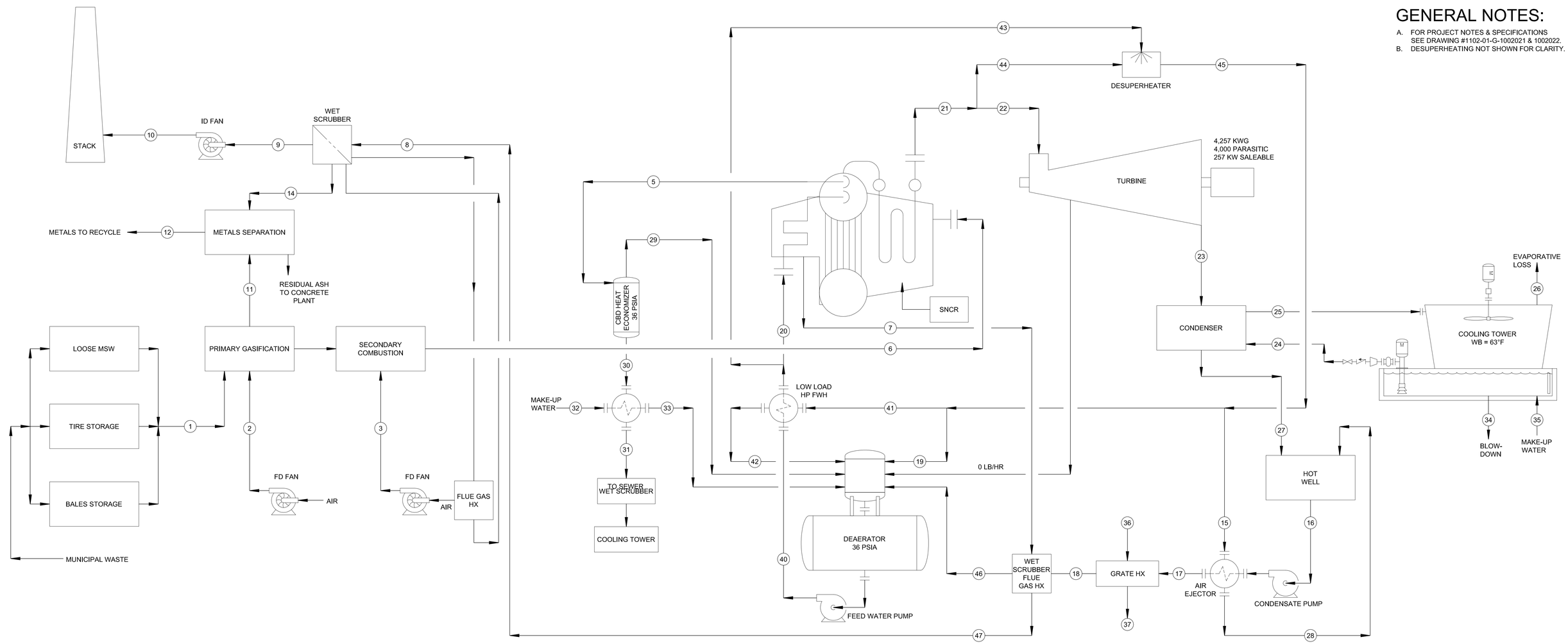

STREAM NUMBER	1	2	3	4	5	6	7	8	9	10	11	12	13	14	15	16	17	18	19	20	21	22	23	24	25	26	27	28	29	30	31	32	33	34	35	36	37	38	39
DESCRIPTION	PLANT FEED	PRIMARY AIR	SECON-DARY AIR	NOT USED	BOILER BLOW-DOWN	COMB-USTION GAS	FLUE GAS HOT	AIR FILTER INLET	AIR FILTER OUTLET	EXHAUST GAS	PRIMARY ASH	SEPA-RATED METALS	NOT USED	AIR PARTIC-ULATES	AIR EJECTOR STEAM	CONDE-NSATE	GRATE HEAT FEED	FLUE GAS HX FEED	DESUPER-HEATER STEAM	BOILER FEED	BOILER STEAM	STEAM TO TURBINE THROTTLE	TURBINE EXHAUST	COOLING WATER SUPPLY (GPM)	COOLING WATER RETURN (GPM)	EVAPO-RATIVE LOSS (GPM)	COND-ENSER OUTLET	AIR EJECTOR CONDE-NSATE	FLASH STEAM	BLOW-DOWN HOT	BLOW-DOWN COLD	BOILER MAKE-UP COLD	BOILER MAKE-UP HOT	CT BLOW-DOWN (GPM)	CT MAKE-UP (GPM)	GRATE WATER SUPPLY (GPM)	GRATE WATER RETURN (GPM)	SNCR	
PHASE (S,L,V)	S	V	V	-	L	V	V	V	V	V	S	S	-	S	V	L	L	L	V	L	V	V	V	L	L	V	L	L	V	L	L	L	L	L	L	L	L	S	-
TEMP (°F)	80	80	80	-	538	X	-	-	-	-	X	-	-	-	365	106	120	120	365	261	598	598	102	71	77	-	102	365	305	301	121	60	241	-	-	250	129	-	-
PRESS (PSIA)	14.7	14.7	14.7	-	940	-	-	-	-	-	-	-	-	-	165	14.7	-	-	165	1140	915	915	1	-	-	-	1	165	36	36	-	-	-	-	-	-	-	-	-
ENTHALPY (BTU/LBM)	5800	-	-	-	533	-	-	-	-	-	-	-	-	-	1196	74	88	88	1196	270	1299	1299	1004	-	-	-	70	339	1168	270	89	28	209	-	-	-	-	-	-
MASS FLOW (LBM/HR)	12,810	-	-	-	1189	X	0	-	-	-	X	-	-	-	800	50,800	50,800	50,800	6,852	60,662	59,473	50,000	50,000	-	-	-	50,000	800	334	856	856	856	856	-	-	-	-	-	-
VOLUME FLOW (ACFM)	-	-	-	-	-	X	-	-	-	-	-	-	-	-	-	-	-	-	-	-	-	-	-	15,303		75	-	-	-	-	-	-	-	35	110	0		-	-
VOLUME FLOW (SCFM)	-	X	X	-	-	X	-	-	-	-	-	-	-	-	-	-	-	-	-	-	-	-	-	-	-	-	-	-	-	-	-	-	-	-	-	-	-	-	-

STREAM NUMBER	40	41	42	43	44	45	46	47
DESCRIPTION	DEAER-ATOR OUTLET	STEAM TO FWH	FWH CONDE-NSATE	WATER TO DESUPE-RHEATER	STEAM TO DESUPE-RHEATER	DESUPE-RHEATER OUTLET	DEAER-ATOR FEED	FLUE GAS COLD
PHASE (S,L,V)	L	V	L	L	V	V	L	V
TEMP (°F)	261	365	365	261	598	365	120	142
PRESS (PSIA)	1140	165	165	1140	915	165	-	-
ENTHALPY (BTU/LBM)	230	1196	339	270	1299	1196	88	-
MASS FLOW (LBM/HR)	61,713	2872	2872	1051	9472	10,524	50,000	0
VOLUME FLOW (ACFM)	-	-	-	-	-	-	-	-
VOLUME FLOW (SCFM)	-	-	-	-	-	-	-	-

REVISION IN PROGRESS
05 Apr 12 – 03:02 pm

NO.	REVISIONS	BY	DATE
D	CHANGED DRAWING NUMBER	JRM	4/5/12
C	ISSUED FOR NOT TO EXCEED BUDGET	BEH	3/23/12
B	FOR REFERENCE ONLY	DTS	1/9/12
A	FOR REFERENCE ONLY	NGJ	12/29/11

ADA COUNTY, IDAHO

EVERGREEN ENGINEERING
Engineering and Construction Services
EUGENE, OREGON
(541) 484-4771 FAX: (541) 484-6759
www.evergreenengineering.com

EE JOB NUMBER 2540.1
CKD:
APP: JP
EE DRAWING NUMBER: 1102-04-F-1002048
CAD FILE: 1102-04-F-1002048.dwg

UNLESS OTHERWISE SPECIFIED DIMENSIONS ARE IN INCHES
TOLERANCES ARE:
DECIMAL X ±.1 XX ±.02 XXX ±.005
WELD ± 1/32
CHAMFERS ±5°
ANGLES ±1°
CAST ±1/8
FRACTIONS ±1/16
THIRD ANGLE PROJECTION

DRAWN DS 12/05/11
CHECKED
QA
MFG
APPROVED JP
MATERIAL SEE TABLE
FINISH N/A

DYNAMIS ENERGY
Dynamis Energy LLC,
776 E. Riverside Dr. Ste. 150
Eagle, ID 83616

TITLE
408T WASTE TO ENERGY FACILITY
HEAT BALANCE FLOW DIAGRAM
50K PPH LOW LOAD W/ FG HX

SIZE D | DWG NO 1102-04-F-1002048 | REV D
SCALE: NONE | SHEET 1 OF 1

APPENDIX E

Manufacturer Information

DIRECT CONTACT LLC

Main: 2555 – 34th Street NE – Canton, OH – 44705 (330) 437-0444
West Coast: P.O. Box 2969 - Renton, WA - 98056 (425) 235-1723

April 24, 2012

Dynamis Energy, LLC
776 East Riverside Drive
Suite 150
Eagle, Idaho 833616

Attention: Chris Durand, Project Manager

Reference: MSW to Energy - ADA, County

Subject: Heat Recovery and Pollutant Abatement System
DCI-HTR Scrubbing Heat Recovery System
Revision A

Dear Chris,

We have completed the design of our subject system, and have determined the expect abatement results. These results are based on "Peak Load" Production:

Peak Load Production:
Incoming Flue Gas Mass Flow:

Non-Reactive/Non-Condensable	491,502-lb/hr
Water Vapor	50,756-lb/hr
Sulfur Dioxide Gas	40-lb/hr
Hydrochloric Acid Vapor	10-lb/hr
PM_{10}	7-lb/hr
$PM_{2.5}$ & smaller	6.5-lb/hr
Fahrenheit Temperature	350°F
Absolute Pressure	12.88-Psia

Given the above conditions, design liquid irrigation rates and contact solution pH, and 31-million BTU/hr rate of heat recovery, Direct Contact LLC expects to reduce the exiting gas at the following rates:

Component	*Incoming*	*Removal*
Sulfur Dioxide Gas	40-lb/hr	71.25%
Hydrochloric Acid Vapor	10-lb/hr	94.05%
PM_{10}	7-lb/hr	99.00%
$PM_{2.5}$ & smaller	6.5-lb/hr	41.00%

Direct Contact LLC will conditionally guarantee the above removal rates at Peak Load Production or lower rate.

Expected removal rates will change based on and relative to the incoming conditions:

> If heat recovery rate decreases at a constant mass flow rate, then the expected particulate recovery efficiency will improve slightly, but the acid gases removal efficiency will decrease slightly.
>
> If flue gas mass flow rate is reduced, then the acid gases capture efficiency will increase slightly, but the particulate capture efficiency will decrease slightly.
>
> If the solution in contact with the flue gas has its pH raised then the acid gas capture efficiency will increase conversely if the pH drops the acid gas capture rate will decrease.
>
> As the moisture content of gas entering the DCLLC 'Hydro Thermal Recovery' vessel increases, the PM2.5 particulate removal will increase.

Per our ongoing discussion, I trust that this will clearly state what removal rates we can expect to provide for your 'Peak Load Conditions.' Please contact me with any questions you have on these numbers or any of the above.

Direct Contact LLC appreciates the opportunity to assist Dynamis Energy on your Heat Recovery and Pollution Abatement System.

Thank you for your continued consideration.

With *Warmest* Regards,

Bill Carson

CHIEF ENGINEER

Direct Contact LLC

Waste Heat Recovery... adding up to much more than a drop in the bucket!

(425) 235-1723 **x101** // **cell** (206) 295-7678// fax (425) 277-5780

Energy-Efficiency-Environment

DIESEL GENERATOR SET

CATERPILLAR®

Image shown may not reflect actual package.

STANDBY

300 ekW 375 kVA
60 Hz 1800 rpm 480 Volts

Caterpillar is leading the power generation marketplace with Power Solutions engineered to deliver unmatched flexibility, expandability, reliability, and cost-effectiveness.

FEATURES

FUEL/EMISSIONS STRATEGY
- EPA Certified for Stationary Emergency Application (EPA Tier 3 emissions levels)

DESIGN CRITERIA
- The generator set accepts 100% rated load in one step per NFPA 110 and meets ISO 8528-5 transient response.

UL 2200
- UL 2200 listed packages available. Certain restrictions may apply. Consult with your Cat® Dealer.

FULL RANGE OF ATTACHMENTS
- Wide range of bolt-on system expansion attachments, factory designed and tested
- Flexible packaging options for easy and cost effective installation

SINGLE-SOURCE SUPPLIER
- Fully prototype tested with certified torsional vibration analysis available

WORLDWIDE PRODUCT SUPPORT
- Cat dealers provide extensive post sale support including maintenance and repair agreements
- Cat dealers have over 1,800 dealer branch stores operating in 200 countries
- The Cat® S•O•S℠ program cost effectively detects internal engine component condition, even the presence of unwanted fluids and combustion by-products

CAT® C9 ATAAC DIESEL ENGINE
- Utilizes ACERT™ Technology
- Reliable, rugged, durable design
- Field-proven in thousands of applications worldwide
- Four-stroke diesel engine combines consistent performance and excellent fuel economy with minimum weight
- ADEM™A4 electronic engine control

CAT GENERATOR
- Matched to the performance and output characteristics of Cat engines
- Load adjustment module provides engine relief upon load impact and improves load acceptance and recovery time
- UL 1446 Recognized Class H insulation

CAT EMCP 3 SERIES CONTROL PANELS
- Simple user friendly interface and navigation
- Scalable system to meet a wide range of customer needs
- Integrated Control System and Communications Gateway

FACTORY INSTALLED STANDARD & OPTIONAL EQUIPMENT

System	Standard	Optional
Air Inlet	• Light Duty Air filter • Service indicator	[ ] Single element air filter [ ] Dual element air filter [ ] Heavy-duty dual element air filter with precleaner [ ] Air inlet shut-off
Cooling	• Radiator package mounted • Coolant level sight gauge • Coolant drain line with valve • Fan and belt guards • Cat® Extended Life Coolant	[ ] Radiator duct flange [ ] Low coolant level sensor
Exhaust	• Dry exhaust manifold • Exhaust flange outlet	[ ] Industrial [ ] Residential [ ] Critical Mufflers [ ] Stainless steel exhaust flex fittings with split-cuff [ ] Manifold and turbocharger guards [ ] Elbows and through-wall kits
Fuel	• Primary fuel filter with integral water separator • Secondary fuel filters • Fuel priming pump • Engine fuel transfer pump • Fuel cooler	[ ] Integral dual wall UL listed fuel tank bases [ ] Sub-base dual wall UL listed fuel tank base [ ] Manual transfer pump [ ] Fuel level switch [ ] Flexible fuel lines
Generator	• Class H insulation • Class H temperature Rise • VR6 voltage regulator with 3-phase sensing with load adjustment module • IP23 Protection • Power cable termination box (NEMA mech lug holes)	[ ] Oversize generators [ ] Digital voltage regulator with kVAR/PF control [ ] Anti-condensation space heaters [ ] Coastal Protection (CIP) [ ] Permanent magnet excitor (PMG) [ ] Internal excited (IE) [ ] Reactive droop
Power Termination	• Power center houses EMCP controller and control terminations (rear mounted) • Segregated low voltage wiring termination panel • Bottom cable entry • IP22 Protection	[ ] Power center mounting option (right side) [ ] Circuit breakers, UL listed, 3 pole (80% & 100%) [ ] Circuit breakers, IEC compliant, 3-4 pole (100%) [ ] Power terminal strips (NEMA or IEC mechanical lug holes) [ ] Multiple circuit breakers [ ] Shunt trip [ ] Auxiliary contacts
Governor	• ADEM™A4	[ ] Load share module
Control Panel	• EMCP 3.1 (mounted in power center) • Speed adjust • Voltage adjustment • Emergency stop pushbutton	[ ] EMCP 3.2 or [ ] EMCP 3.3 [ ] Right-hand mounted power center [ ] Local annunciator module (NFPA 99/110) [ ] Remote annunicator module (NFPA 99/110) [ ] Discrete I/O module
Lube	• Lubricating oil and filter • Oil drain line with valves • Fumes disposal • Lube oil level indicator • Oil cooler	[ ] Oil temperature sensor [ ] Manual sump pump
Mounting	• Formed steel wide base frame • Linear vibration isolation-seismic zone 4	[ ] Oil skid base [ ] Formed steel wide base frame
Starting/Charging	• 24 volt starting motor • 24 volt, 45 amp charging alternator	[ ] Jacket water heater with shut off valves [ ] Block heater [ ] Ether starting aid [ ] Battery disconnect switch [ ] Battery charger (5 or 10 amp) [ ] Oversize batteries [ ] Batteries with rack and cables
General	• Paint - Caterpillar yellow except rails and radiators gloss black • Flywheel housing - SAE No.1	[ ] UL 2200 package [ ] CSA Certification [ ] Weather protective enclosure [ ] Sound attenuated protective enclosure

STANDBY 300 ekW 375 kVA

60 Hz 1800 rpm 480 Volts

CATERPILLAR®

SPECIFICATIONS

CAT GENERATOR

Frame size.....LC5014J
Excitation.....Self Excited
Pitch.....0.6667
Number of poles.....4
Number of bearings..... 1
Number of leads.....012
Insulation..... UL 1446 Recognized Class H with tropicalization and antiabrasion
- Consult your Caterpillar dealer for available voltages
IP rating.....IP23
Alignment.....Pilot Shaft
Overspeed capability..... 125% of rated
Wave form deviation (Line to Line)..... 2%
Voltage regulator.....Three phase sensing
Voltage Regulation.. Less than +/- 1/2% (steady state)Less than +/- 1% (no load to full load)
Telephone Influence Factor..... Less than 50
Harmonic distortion..... Less than 5%

CAT DIESEL ENGINE

C9 ATAAC, I-6, 4-stroke-cycle watercooled diesel
Bore - mm..... 112.00 mm (4.41 in)
Stroke - mm..... 149.00 mm (5.87 in)
Displacement - L..... 8.80 L (537.01 in^3)
Compression ratio..... 16.1:1
Aspiration..... Turbocharged Air-to-Air Aftercooled
Fuel system..... HEUI
Governor type..... Caterpillar ADEM control system

CAT EMCP 3 SERIES CONTROLS

- EMCP 3.1 (Standard)
- EMCP 3.2 / EMCP 3.3 (Option)
- Single location customer connector point
- True RMS metering, 3-phase
- Controls
  - Run / Auto / Stop control
  - Speed Adjust
  - Voltage Adjust
  - Emergency Stop Pushbutton
  - Engine cycle crank
- Digital Indication for:
  - RPM
  - Operating hours
  - Oil Pressure
  - Coolant temperature
  - System DC volts
  - L-L volts, L-N volts, phase amps, Hz
  - ekW, kVA, kVAR,kW-hr, %kW, PF (EMCP 3.2 / 3.3)
- Shutdowns with common indicating light for:
  - Low oil pressure
  - High coolant temperature
  - Low coolant level
  - Overspeed
  - Emergency stop
  - Failure to start (overcrank)
- Programmable protective relaying functions: (EMCP 3.2 & 3.3)
  - Under and over voltage
  - Under and over frequency
  - Overcurrent (time and inverse time)
  - Reverse power (EMCP 3.3)
- MODUS isolated data link (RS-485 half-duplex EMCP 3.2 & 3.3)
- Options
  - Vandal door
  - Local annunciator module
  - Remote annunciator module
  - Input / Output module
  - RTD / Thermocouple Modules
  - Monitoring software

TECHNICAL DATA

Open Generator Set - - 1800 rpm/60 Hz/480 Volts	DM8168	
Tier 3		
Generator Set Package Performance		
Genset Power rating @ 0.8 pf	375 kVA	
Genset Power rating with fan	300 ekW	
Coolant to aftercooler		
Coolant to aftercooler temp max	49 ° C	120 ° F
Fuel Consumption		
100% load with fan	86.1 L/hr	22.7 Gal/hr
75% load with fan	66.7 L/hr	17.6 Gal/hr
50% load with fan	51.3 L/hr	13.6 Gal/hr
Cooling System[1]		
Air flow restriction (system)	0.12 kPa	0.48 in. water
Air flow (max @ rated speed for radiator arrangement)	497 m^3/min	17551 cfm
Engine Coolant capacity with radiator/exp. tank	36.0 L	9.5 gal
Engine coolant capacity	22.0 L	5.8 gal
Radiator coolant capacity	14.0 L	3.7 gal
Inlet Air		
Combustion air inlet flow rate	25.7 m^3/min	907.6 cfm
Exhaust System		
Exhaust stack gas temperature	499.5 ° C	931.1 ° F
Exhaust gas flow rate	69.7 m^3/min	2461.4 cfm
Exhaust flange size (internal diameter)	170 mm	7 in
Exhaust system backpressure (maximum allowable)	5.9 kPa	23.7 in. water
Heat Rejection		
Heat rejection to coolant (total)	121 kW	6881 Btu/min
Heat rejection to exhaust (total)	309 kW	17573 Btu/min
Heat rejection to aftercooler	89 kW	5061 Btu/min
Heat rejection to atmosphere from engine	43 kW	2445 Btu/min
Heat rejection to atmosphere from generator	21.9 kW	1245.5 Btu/min
Alternator[2]		
Motor starting capability @ 30% voltage dip	682 skVA	
Frame	LC5014J	
Temperature Rise	150 ° C	270 ° F
Lube System		
Sump refill with filter	39.0 L	10.3 gal
Emissions (Nominal)[3]		
NOx g/hp-hr	4.11 g/hp-hr	
CO g/hp-hr	.25 g/hp-hr	
HC g/hp-hr	.06 g/hp-hr	
PM g/hp-hr	.033 g/hp-hr	

[1] For ambient and altitude capabilities consult your Cat dealer. Air flow restriction (system) is added to existing restriction from factory.
[2] Generator temperature rise is based on a 40° C (104° F) ambient per NEMA MG1-32.
[3] Emissions data measurement procedures are consistent with those described in EPA CFR 40 Part 89, Subpart D & E and ISO8178-1 for measuring HC, CO, PM, NOx. Data shown is based on steady state operating conditions of 77°F, 28.42 in HG and number 2 diesel fuel with 35° API and LHV of 18,390 btu/lb. The nominal emissions data shown is subject to instrumentation, measurement, facility and engine to engine variations. Emissions data is based on 100% load and thus cannot be used to compare to EPA regulations which use values based on a weighted cycle.

RATING DEFINITIONS AND CONDITIONS

Meets or Exceeds International Specifications: AS1359, CSA, IEC60034-1, ISO3046, ISO8528, NEMA MG 1-22, NEMA MG 1-33, UL508A, 72/23/EEC, 98/37/EC, 2004/108/EC

Standby - Output available with varying load for the duration of the interruption of the normal source power. Average power output is 70% of the standby power rating. Typical operation is 200 hours per year, with maximum expected usage of 500 hours per year. Standby power in accordance with ISO8528. Fuel stop power in accordance with ISO3046. Standby ambients shown indicate ambient temperature at 100% load which results in a coolant top tank temperature just below the shutdown temperature.

Ratings are based on SAE J1349 standard conditions. These ratings also apply at ISO3046 standard conditions. **Fuel rates** are based on fuel oil of 35° API [16° C (60° F)] gravity having an LHV of 42 780 kJ/kg (18,390 Btu/lb) when used at 29° C (85° F) and weighing 838.9 g/liter (7.001 lbs/U.S. gal.). Additional ratings may be available for specific customer requirements, contact your Cat representative for details. For information regarding Low Sulfur fuel and Biodiesel capability, please consult your Cat dealer.

DIMENSIONS

Package Dimensions		
Length	**3132.0 mm**	**123.31 in**
Width	**1110.0 mm**	**43.7 in**
Height	**1844.5 mm**	**72.62 in**
Weight	**2307 kg**	**5,086 lb**

NOTE: For reference only - do not use for installation design. Please contact your local dealer for exact weight and dimensions. (General Dimension Drawing #2778059).

© 2010 Caterpillar
All rights reserved.

Materials and specifications are subject to change without notice. The International System of Units (SI) is used in this publication.

CAT, CATERPILLAR, SAFETY.CAT.COM their respective logos, "Caterpillar Yellow," and the POWER EDGE trade dress, as well as corporate and product identity used herein, are trademarks of Caterpillar and may not be used without permission.

GEN SET PACKAGE PERFORMANCE DATA

JANUARY 10, 2011

For Help Desk Phone Numbers Click here

Performance Number: DM8168

Change Level: 02

Sales Model: C9 DITA
Combustion: DI
Aspr: TA
Engine Power:
300 W/F EKW 319 W/O F EKW
480 HP
Speed: 1,800 RPM
After Cooler: ATAAC
Manifold Type: DRY
Governor Type: ELEC
After Cooler Temp(F): 120
Turbo Quantity: 1
Engine App: GP
Turbo Arrangement:
Hertz: 60
Application Type: PACKAGE-DIE
Engine Rating: PGS
Strategy:
Rating Type: STANDBY
Certification: EPA TIER-3 2005 - ----
EPA STAT EMERC 2011 - ----

General Performance Data 1

GEN W/F EKW	PERCENT LOAD	ENGINE POWER BHP	ENGINE BMEP PSI	FUEL BSFC LB/BHP-HR	FUEL RATE GPH	INTAKE MFLD TEMP DEG F	INTAKE MFLD P IN-HG	INTAKE AIR FLOW CFM	EXH MFLD TEMP DEG F	EXH STACK TEMP DEG F	EXH GAS FLOW CFM
300	100	480	392.91	0.33	22.75	122.72	82.71	911.12	1,252.4	931.1	2,461.43
270	90	430	352.3	0.33	20.5	121.1	78.86	889.93	1,182.74	879.8	2,302.52
240	80	384	314.01	0.34	18.54	121.46	75.07	861.68	1,123.16	841.82	2,168.32
225	75	361	295.45	0.34	17.62	121.64	73.12	847.55	1,096.7	827.06	2,104.76
210	70	339	277.32	0.35	16.8	121.64	71.13	833.43	1,074.56	818.06	2,044.72
180	60	296	242.07	0.36	15.16	121.64	66.57	801.64	1,031.36	801.14	1,924.65
150	50	253	207.55	0.37	13.55	121.64	61.21	759.27	989.24	784.94	1,808.11
120	40	213	173.9	0.39	11.81	121.64	53.1	692.17	947.48	769.28	1,645.67
90	30	170	139.53	0.4	9.8	121.64	42.73	603.88	901.58	753.44	1,423.18
75	25	149	121.83	0.41	8.74	121.64	36.96	557.97	876.92	745.34	1,296.05
60	20	127	103.99	0.42	7.61	121.64	30.77	505	851	737.06	1,158.32
30	10	82	67.44	0.44	5.2	121.46	17.74	391.99	721.58	649.4	844.02

General Performance Data 2

GEN W/F EKW	PERCENT LOAD	ENGINE POWER BHP	COMPRESS OUT PRESS IN-HG	COMPRESS OUT TEMP DEG F
300	100	480	83.63	452.48
270	90	430	79.87	429.08
240	80	384	76.08	407.3
225	75	361	74.15	397.04
210	70	339	72.2	387.5
180	60	296	67.58	368.96
150	50	253	62.16	350.78
120	40	213	53.96	322.88
90	30	170	43.5	283.64
75	25	149	37.67	260.6
60	20	127	31.45	235.22

VICTORY ENERGY OPERATIONS, LLC
10701 E. 126th North, Collinsville, OK 74021
Phone: 918-274-0023 Fax: 918-274-0059

HORIZON™ series

To:

EVERGREEN ENGINEERING

EVERGREEN ENGINEERING
Engineering and Construction Services

Modular Watertube Heat Recovery Boiler

Proposed for

DYNAMIS ENERGY

Presented To: **Mr. John Solvason, PE**
Evergreen Engineering
1740 Willow Creek Circle
Eugene, Oregon 97402

Date: February 2, 2012
Victory Energy Proposal No.: VE-4837_ADA

Scope of Supply

Supply		ITEM	Installation	
VEO	*Buyer*		*VEO*	*Buyer*
X		Boiler including refractory lining, CS outer casing with integral support steel base		X
X		Boiler Trim Package	X	
X		Water column relay box	X	
X		Steam pressure gauge	X	
N/A	N/A	Natural Gas Duct Burner	N/A	N/A
N/A	N/A	Fuel Trains	N/A	N/A
N/A	N/A	Fuel PRV	N/A	N/A
N/A	N/A	Burner Management System	N/A	N/A
N/A	N/A	Combustion Control System	N/A	N/A
X		Economizer externally insulated and lagged with integral support steel		X
	X	System Inlet and Outlet Duct		X
	X	Exterior Duct Insulation and Lagging		X
	X	Stack		X
X		Platforms and Walkways (Boiler, sootblowers, and Economizer)		X
X		Trim Piping within Terminal Points		X
	X	Interconnecting Piping Insulation and Lagging		X
	X	Piping External of Terminal Points at each Equipment Skid		X
X		Motorized Sootblowers		X
X		Safety Valves		X
	X	Steam Vent Silencer		X
	X	DA Package w/FW Pumps		X
	X	FW pre-heater (Shell & Tube Heat Exchanger)		X
	X	Blowdown System		X
	X	SNCR		X
	X	Foundation, Anchor Bolts, Concrete, Grout		X
X		Recommended Spare Parts Package (LATER)		X
N/A	N/A	Special Tools	N/A	N/A
X		Loading Equipment at Shop		X
	X	Unloading Equipment at Jobsite		X
X		Boil-Out Chemicals		X
	X	Site Disposal of Chemicals and Water		X
	X	Site Storage Prior to Installation		X
	X	Environmental Permit		X
	X	Erection and Start-Up Labor		X

Supply		ITEM	Installation	
VEO	*Buyer*		*VEO*	*Buyer*
	X	Field Balancing and Alignment of Rotating Equipment		X
	X	Electrical Power Supply and Lighting Protection		X
	X	Interconnecting Wiring or Cabling		X
X		Erection Consultant (per diem in accordance with VEO service terms and rates)		
X		Class Room Training (per diem in accordance with VEO service terms and rates)		
X		Field Testing Labor, Equipment and Consumables (per diem in accordance with VEO service terms and rates)		
X		Start-Up Consultant (per diem in accordance with VEO service terms and rates)		
X		Documentation		
X		O & M Manuals (Five (5) copies provided)		

General Information

The platen style modular boiler design offers the most efficient (from an installation perspective) approach for large capacity units compared to other designs. The unit will consist of separately shipped modules.

The proposed design will include a total of eight (8) shop assembled modules consisting of the following:

	Module Qty.	Module Description
1)	Two (2)	Furnace Section (shipped in two modules)
2)	One (1)	SNCR Spool
3)	One (1)	Screen section
4)	One (1)	Secondary Superheater Section
5)	One (1)	Primary Superheater Section
6)	One (1)	Evaporator Module
7)	One (1)	Economizer Module

The current designs optimize on the total number of tubes by using the relatively tall and narrow duct opening. The relatively tall evaporator tubes provide a conservative amount of hydraulic head to promote circulation and freedom to expand vertically downward. All tube to header connections are welded.

The single large diameter steam drum makes it easier to perform inspections and maintenance as the steam drum will house the required steam separation equipment.

The boiler will be built in accordance with the ASME Section I code.

VEO designs its units with logistics and constructability in mind.

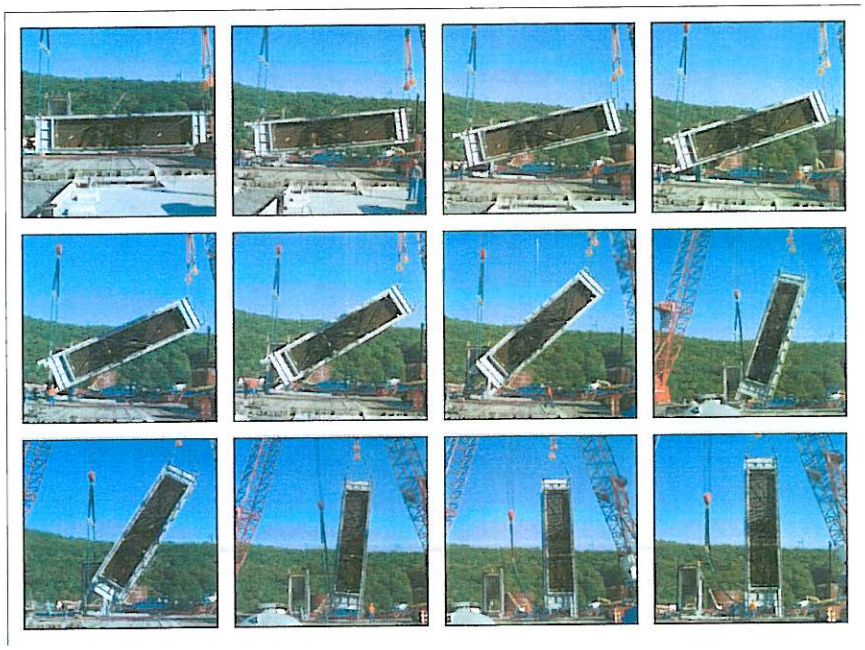

Drums

Submerged arc automatic welded and stress relieved with radiographed welded seams

- Drum material shall be SA-516 Gr. 70 (Normalized) or equal
- Drums are provided with a 12" x 16" manway access in each drum head on each end

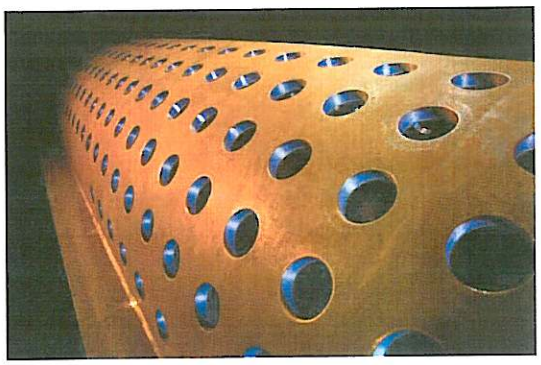

Upper (Steam) Drum

- Inside diameter is 64 inches ID, 2.5" thick
- External connections consist of the main steam outlet (Buttweld), water column (Buttweld) auxiliary low water cut-off (Buttweld), steam gauge (Buttweld), vent (Buttweld), safety valves (flanged outlet), feedwater (Buttweld), chemical feed (Buttweld), continuous blowdown (Buttweld) as well as required riser and downcomer connections.
- The upper drum includes a feedwater distribution pipe and a blowdown collection pipe

Lower Evaporator Collection Headers

- Diameter is 8 inch, Sch 140 SA-160B
- External connections consist of intermittent blowdown (Buttweld)
- The intermittent blowdown connections is at the lowest point for draining of the unit

Tubes

MODUAL BOX #1

Furnace Section:

- All tubes enter upper and lower platen headers radially where each tube to header joint is 100% welded.
- Boiler Screen Section 2.5" O.D., 0.220" M.W., SA-178 Grade A (Bare)
  The entire furnace will be coated with an Inconel 625 flame spray (or equal) to protect against the high levels of HCl.

Screen Section:

- All tubes enter upper and lower platen headers radially where each tube to header joint is 100% welded.
- Boiler Screen Section 2" O.D., 0.180" M.W., SA-178 Grade A (Bare)
  The first row of the screen section will be coated with an Inconel 625 flame spray (or equal) to protect against the high levels of HCl.

Superheater Section:

- All tubes enter upper and lower platen headers radially where each tube to header joint is 100% welded.
- Secondary Superheater (SH2) 1.9 O.D., 0.126" M.W., SB-407 (Bare)
- Primary Superheater (SH1) 2" O.D., 0.180 M.W., SA-213T22 (Bare)

Evaporator Section:

- All tubes enter upper and lower platen headers radially where each tube to header joint is 100% welded.
- Boiler Screen Section 2" O.D., 0.180" M.W., SA-178 Grade A (Bare)

Boiler Wall Construction

The outer casing of the boiler will have an average surface temperature of 180 Deg. F provided that the local ambient temperature does not exceed 80 Deg. F with 2 feet per second wind velocity. The boiler walls include the following:

- The boiler outer casing for all modules is a minimum ¼" plate with external structural stiffening. The interior of the casing will be lined with a thermal board and castable refractory system.

Boiler Access

The unit has limited access through 15" x 18" access doors in each cleaning lane on one side of the boiler for inspection and offline cleaning. Additionally, VEO will supply eight (8) retractable sootblowers for the HRSG (two prior to the screen section, two after the screen section, two between SH modules, and two before the Evaporator module), and two (2) rotary for the economizer complete with wallboxes, associated distal bearings and supports. Sequencing controls are not included. We have offered to supply the piping in random lengths. VEO drawings shall provide a suggested routing via general plans and elevations. Final routing and support shall be determined in the field.

Steam / Water Separation

The steam drum will include steam separation devices to achieve 99.95% ppm steam quality when the feedwater quality is supplied in accordance with the ABMA requirements. The specific approach includes three distinct phases of separation: 1.) First the down comers (water) and risers (steam) are channeled to the appropriate areas of the steam drum via baffles; 2.) Second the steam flows through a series on vortex cyclones that use centrifugal force to drop additional moisture from the steam; 3.) Finally the steam flows though chevrons that incorporate corrugated plates to cyclically change the direction of the flow path, removing additional moisture prior to exiting the steam drum.

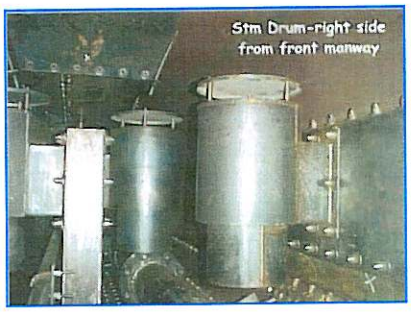

Structural Framing

The boiler modules include rigid structural framing designed to distribute the loads onto a flat concrete foundation. We have included structural steel to extend from each module base to approx. 8' below the bottom of each hopper. Once the final site location details are reviewed we may need to revise our structural steel supports, which may have a cost impact.

The basis of the structural design shall be the ASCE-05: Wind load design is 90 mph; Exposure C; Importance Factor 1.25.

Interconnecting Piping:

Interconnecting piping will be provided between the feedwater 3-valve bypass assembly and the economizer inlet and between the economizer outlet and the boiler inlet. Additionally the crossover header piping from the steam drum outlet to the superheater inlet, as well as evaporator crossover piping between the screen section and the primary evaporator is included. The installation of this piping will be performed by others in the field. Once the piping installation is complete, the piping will need to be Hydro-tested to 1 ½ times the design pressure of the system in accordance with the ASME code.

We have offered to supply the sootblower steam piping in random lengths, VEO drawings shall provide a suggested routing via general plans and elevations. Final routing and support shall be determined in the field.

Large bore (>2") piping shall be designed fabricated and supplied, incorporating the stress analysis for feedwater and steam service. Field joints shall be incorporated to accommodate shipping and constructability considerations.

Small bore (= or <2") piping shall supplied via random lengths. VEO drawings shall provide a suggested routing via general plans and elevations. Final routing shall be determined in the field.

Painting:

All equipment provided by VEO will be, at a minimum SSPC-SP3, prime painted with inorganic zinc primer and final finish paint per VEO Standards for the applicable service temperature. Touch up in the field after equipment installation shall be performed by others.

Boiler Trim Package (Quantities are per Boiler):

BOILER	QUANTITY
Water Column	1
Water Column Drain Valve	1
Gage Valves	2 Sets
Water Level Gage	2
Water Level Gage Drain Valve	2
Auxiliary Low Water Cutoff	1
Auxiliary Low Water Cutoff Drain Valve	1
Low Water Cutout By-Pass Pushbutton	1
Drum Level Transmitter Shutoff Valve	4
Drum Level Transmitter Drain Valve	2
Steam Pressure Gage	1
Steam Pressure Gage Shutoff Valve	1
Steam Pressure Gage Test Valve	1
Hi Steam Pressure Switch	1
Hi-Hi Steam Pressure Switch	1
Boiler Safety Valve #1	1
Boiler Safety Valve #2	1
Steam Drum Vent Valve	1
Continuous Blowdown Regulating Valve	1
Continuous Blowdown Stop Valve	1
Superheater Safety Valve	1
Superheater Start-up Vent Valve	1
Superheater Drain Valve	2
Superheater Test Well	1
Interstage Desuperheater Spay Nozzle	1
Main Steam Stop Valve	1
Non Return Valve	1
Feedwater 3-valve bypass assembly	1
Feedwater Control Valve	1
Feedwater Gate Valve	1
Feedwater Check Valve	1

We will supply the following spares as part of our offering:
One (1) spare set of manway gaskets
One (1) boil out gage glass

Boiler Instrumentation Package:

TAG NUMBER	SERVICE
LE-82	STEAM DRUM LEVEL SENSING FOUR PROBE WATER COLUMN
LE-83	STEAM DRUM AUXILIARY LOW LEVEL SENSING WATER COLUMN
RP-84	RELAY PANEL FOR ABOVE WATER COLUMNS
HS-85	LOW LEVEL SHUTDOWN BY-PASS PUSHBUTTON STATION FOR ABOVE
LG-80A	STEAM DRUM LEVEL GAUGE
LG-80B	STEAM DRUM LEVEL GAUGE
HV-81	VALVE SET FOR ABOVE LEVEL GAUGE
HV-81	VALVE SET FOR ABOVE LEVEL GAUGE
PI-95	STEAM DRUM PRESSURE GAUGE
PSH-94	STEAM DRUM HIGH PRESSURE ALARM SWITCH
PSHH-93	STEAM DRUM HIGH PRESSURE SHUTDOWN SWITCH
LT-88A	STEAM DRUM LEVEL TRANSMITTER
HV-87	3-VALVE MANIFOLD FOR ABOVE TRANSMITTER
LT-88B	STEAM DRUM LEVEL TRANSMITTER
HV-87	3-VALVE MANIFOLD FOR ABOVE TRANSMITTER
PT-91	STEAM DRUM PRESSURE TRANSMITTER
FT-30	FEEDWATER FLOW TRANSMITTER
HV-31	3-VALVE MANIFOLD FOR ABOVE TRANSMITTER
FE-30	ORIFICE PLATE FOR ABOVE TRANSMITTER (FLANGE BY OTHERS)
FCV-34	BOILER LEVEL CONTROL VALVE
ZT-34	POSITION FEEDBACK TRANSMITTER FOR ABOVE CONTROL VALVE
TI-40	FEEDWATER SUPPLY THERMOMETER W/ THERMOWELL
TI-41	FEEDWATER OUT OF ECONOMIZER THERMOMETER W/ THERMOWELL
TI-42	FEEDWATER OUT OF ECONOMIZER THERMOMETER W/ THERMOWELL
TI-46	FEEDWATER SUPPLY TO DRUM THERMOMETER W/ THERMOWELL
PSV-45	ECONOMIZERS RELIEF VALVE
PSV-23	STEAM DRUM RELIEF VALVE
PSV-24	STEAM DRUM RELIEF VALVE
TT-110	STEAM OUT OF PRIMARY SUPERHEATER TEMPERATURE TRANSMITTER
TE-110	THERMOCOUPLE / THERMOWELL FOR ABOVE TRANSMITTER
BV-61	ATTEMPERATOR COOLING WATER ON/OFF VALVE
ZSO-61	OPEN POSITION FEEDBACK SWITCH ON ABOVE VALVE
ZSC-61	CLOSED POSITION FEEDBACK SWITCH ON ABOVE VALVE
FCV-63	ATTEMPERATOR COOLING WATER FLOW CONTROL VALVE
ZT-63	POSITION FEEDBACK TRANSMITTER FOR ABOVE CONTROL VALVE
DS-67	SUPERHEATED STEAM ATTEMPERATOR

	Boiler Instrumentation Package cont'd
PSV-112	SUPERHEATER RELIEF VALVE
TT-113	STEAM OUT OF SEC. SUPERHEATER TEMPERATURE TRANSMITTER
TE-113	THERMOCOUPLE / THERMOWELL FOR ABOVE TRANSMITTER
PI-119	STEAM LINE PRESSURE GAUGE
FT-123	STEAM FLOW TRANSMITTER
HV-124	3-VALVE MANIFOLD FOR ABOVE TRANSMITTER
FE-123	ORIFICE PLATE FOR ABOVE TRANSMITTER (FLANGE BY OTHERS)
TT-22A	FLUE GAS INTO SCREEN TUBE SECTION TEMPERATURE TRANSMITTER
TE-22A	THERMOCOUPLE FOR ABOVE TRANSMITTER
TT-22B	FLUE GAS INTO SUPERHEATER SECTION TEMPERATURE TRANSMITTER
TE-22B	THERMOCOUPLE FOR ABOVE TRANSMITTER
TT-22C	FLUE GAS INTO EVAPORATOR SECTION TEMPERATURE TRANSMITTER
TE-22C	THERMOCOUPLE FOR ABOVE TRANSMITTER
TT-22D	FLUE GAS INTO ECONOMIZER SECTION TEMPERATURE TRANSMITTER
TE-22D	THERMOCOUPLE FOR ABOVE TRANSMITTER
TT-22E	FLUE GAS OUT OF ECONOMIZER SECTION TEMPERATURE TRANSMITTER
TE-22E	THERMOCOUPLE FOR ABOVE TRANSMITTER
BV-141	SOOTBLOWER STEAM ON/OFF VALVE
ZSO-141	OPEN POSITION FEEDBACK SWITCH ON ABOVE VALVE
ZSC-141	CLOSED POSITION FEEDBACK SWITCH ON ABOVE VALVE
PCV-142	SOOTBLOWER STEAM PRESSURE CONTROL VALVE
ZT-142	POSITION FEEDBACK TRANSMITTER FOR ABOVE CONTROL VALVE
PSV-145	SOOTBLOWER STEAM SUPPLY LINE RELIEF VALVE
PT-200	SOOTBLOWER STEAM PRESSURE TRANSMITTER

ECONOMIZER SYSTEM

General

One (1) economizer system will be provided for preheating the feedwater for the waste heat recovery boiler to recover heat from the boiler exhaust. The system shall consist of an economizer which will be integrally connected to the boiler outlet connection and will be supplied with required structural stiffening and support.

Economizer Specifications

The economizer modules shall be a rectangular box type, each connected in series, utilizing a carbon steel shell surface. The economizer shall be counter current type arranged to allow the boiler exhaust gas to travel horizontally, while the feedwater travels horizontally in the opposite direction. The economizer shall be constructed in accordance with the ASME code, Section 1 and will bare a National Board Registration.

Construction Features

1. All pressure parts shall conform to the applicable provisions of the current ASME Power Boiler Code, Section 1. The economizer shall be properly nameplated and code stamped. The design pressure shall meet or exceed the design pressure of the boiler.

2. Tubes shall be 1.5" O.D with a minimum wall thickness of 0.180" MW SA-178. All tubes consist of Solid Carbon Steel fins, 2 fins per inch, 0.06" thick and 0.5" high.

3. All tubes shall be individually welded in platen headers and return bends.

4. Terminal connections shall be butt-weld. Headers shall be SA 106B material. Vent, and drain valve connections shall be a minimum of ¾" socket weld.

5. All coils shall be completely drainable by gravity.

6. Method of tube supports shall allow for expansion vertically downward.

9. All exterior surfaces shall be painted with high temperature paint.

10. Insulation shall be shop installed to the outer casing using mineral wool and corrugated lagging in order to maintain an average outer lagging surface temperature of 180 Deg. F provided that the local ambient temperature does not exceed 80 Deg. F with 2 feet per second wind velocity.

WALKWAYS AND LADDERS

Walkways will be provided as indicated. They include:

- Operating platform typical around the steam drum with ladders and or stairs to grade.
- Access to Economizer headers.
- Access to Sootblowers.

All platforms and ladders will be in compliance with all OSHA regulations.

Clarification:

1. VEO has not proposed a conveying system for ash exiting the VEO supplied hoppers.
2. VEO is proposing outer casing temperature as stated.
3. Basic start-up spares are included. Full spare parts proposal would follow once the design has been approved.
4. All field services are proposed on a per diem basis per the attached.
5. VEO reserves the right to further clarify details on other specifications provided.
6. Instrumentation is shipped loose for field installation by others.

BOILER WATER CHEMISTRY RECOMMENDATIONS

ABMA RECOMMENDED BOILER WATER LIMITS

Boiler Type	Drum pressure, psig	Total dissolved solids[b] in boiler water, ppm (max.)	Total Alkalinity[c] in boiler water, ppm	Suspended solids in boiler water, ppm (max.)	Total dissolved solids[c,e] in steam, ppm (max. expected value)
Drum-type boiler	0-300	700-3500	140-700	15	0.2-1.0
Drum-type boiler	301-450	600-3000	120-600	10	0.2-1.0
Drum-type boiler	451-600	500-2500	100-500	8	0.2-1.0
Drum-type boiler	601-750	200-2000	40-400	3	0.1-0.5
Drum-type boiler	751-900	150-1500	30-300	2	0.1-0.5
Drum-type boiler	901-1000	125-1250	25-250	1	0.1-0.5
Drum-type boiler	1001-1800	100	variable[d]	1	0.1
Drum-type boiler	1801-2350	50	variable[d]	N/A	0.1
Drum-type boiler	2351-2600	25	variable[d]	N/A	0.05
Drum-type boiler	2601-2900	15	variable[d]	N/A	0.05
Once-through boiler	1400 & above	0.05	N/A	N/A	0.05

[b] Actual values within the range reflect the TDS in the feedwater. Higher values are for high solids; lower values are for low solids in the feedwater.

[c] Actual values within the range are directly proportional to the actual value of TDS of boiler water. Higher values are for high solids; lower values are for low solids in the boiler water.

[d] Dictated by boiler water treatment.

[e] These values are exclusive of silica.

Predicted Performance Data:

VICTORY ENERGY CUSTOMER SPEC SHEET

Customer:	Dynamis, ADA County, ID	Date:	12/12/2011
Reference:	MSW- Syngas HRSG	Quote #:	VE-4837

		Design Case	Max. Case
Performance Data:			
Total Heat Input	(mmBtu/h)	307.4953	346.4282
Total Heat Absorbed	(mmBtu/h)	266.3954	297.8842
HRSG Efficiency	(%)	86.6	86
Total Draft Loss	(in. WC)	6.24	7.9
Steam Temp. @ NRV Outlet	(F)	825	825
Steam Press.@ NRV Outlet	(psig)	900	900
Steam Flow @ NRV Outlet	(lb/hr)	223753	250201
Screen Performance			
Gas Flow into HRSG	(lb/hr)	561861	633000
Gas inlet Temp	(F)	1824	1841
Gas outlet Temp	(F)	1352	1386
LMTD	(F)	1029.4	1056.8
Overall U	(Btu/ft^2_h_F)	12.21	12.92
Heat Transfer	(mmBtu/hr)	79.9758	86.8584
Gas Draft Loss	(in wc.)	0.45	0.57
SH2 Performance			
Gas Flow into HRSG	(lb/hr)	561861	633000
Gas inlet Temp	(F)	1352	1386
Gas outlet Temp	(F)	1180	1214
Steam Flow	(lb/hr)	223753	250201
Steam Outlet Pressure	(psig)	910	910
Steam Outlet Temp	(F)	826	826
Steam Inlet Pressure	(psig)	930	930
Steam Inlet Temp	(F)	635	632
Overall U	(Btu/ft^2_h_F)	12.09	12.84
LMTD	(F)	514.3	550.9
Heat Transfer	(mmBtu/hr)	28.0585	31.9177
Gas Draft Loss	(in wc.)	0.44	0.56
Tube Side Steam Pressure Drop	(psi)	12.88	16.05
SH1 Performance			
Gas Flow into HRSG	(lb/hr)	561861	633000
Gas inlet Temp	(F)	1180	1214
Gas outlet Temp	(F)	1018	1051
Steam Flow	(lb/hr)	217580	242242
Steam Outlet Pressure	(psig)	930	930
Steam Outlet Temp	(F)	677	680
Steam Inlet Pressure	(psig)	950	950
Steam Inlet Temp	(F)	540	540
Overall U	(Btu/ft^2_h_F)	11.47	12.22
LMTD	(F)	475.2	507.2
Heat Transfer	(mmBtu/hr)	25.8913	29.4354
Gas Draft Loss	(in wc.)	0.43	0.55
Tube Side Steam Pressure Drop	(psi)	10.53	13.07
Desuperheater Performance			
Water Temp.	(F)	250	250

Water Flow Rate	(lb/h)	6173	7959

HRSG Performance

Summary:

Gas Flow into HRSG	(lb/hr)	561861	633000
Gas inlet Temp	(F)	1018	1051
Gas outlet Temp	(F)	745	771
Steam Flow(include Screen)	(lb/hr)	217580	242227
Steam Pressure	(psig)	950	950
Steam Temp	(F)	540	540
Blowdown	(%)	1	1
Feed Water Flow	(lb/hr)	219778	244673
Blowdown Water Flow	(lb/hr)	2198	2447
Feed Water, Inlet Temp	(F)	503	513
Overall U	(Btu/ft^2_h_F)	11.12	11.79
LMTD	(F)	589.8	618.7
Heat Transfer	(mmBtu/hr)	122.4992	136.264
Gas Press. Drop	(in wc.)	1.98	2.51

Economizer Performance

Gas Flow	(lb/hr)	561861	633000
Gas inlet Temp	(F)	745	771
Gas outlet Temp	(F)	345	358
Water Flow	(lb/hr)	219756	244649
Operating Pressure	(psig)	980	980
Water Outlet Temp	(F)	503	513
Water Inlet Temp	(F)	250	250
Overall U	(Btu/ft^2_h_F)	12.1	12.82
LMTD	(F)	156.9	172.3
Heat Transfer	(mmBtu/hr)	59.4989	69.1797
Gas Draft Loss	(in wc.)	3.39	4.28
Tube Side Pressure Drop	(psi)	14.79	18.32

Fuel and Flue Gas Data:

Flue Gas Analysis

H2O	% vol	11.25	11.25
CO2	% vol	9.25	9.25
N2	% vol	71.48	71.48
O2	% vol	8	8
SO2	% vol	0.0035	0.0035
HCl	% vol	0.0145	0.0145
Total	% vol	100	100

Molecular Weight of Flue Gas	(lb/mole)	28.6896	28.6896
Ash in Flue Gas	(lb ash/lb flue gas)	0.00004	0.00004
Dew Point of H2O	(F)	116	116
Dew Point of SO3	(F)	248	248
Dew Point of HCl		123	123
Altitude Above Sea Level	(ft)	3050	3050

Physical Design Data:

Furnace Design Data		
Furnace Volume	(ft^3)	8018
Furnace Effective Area	(ft^2)	1828
SH2 Design Data		
Total Number of Tubes		840
Total Heat Transfer Area	(ft^2)	5014
Tube OD	(in)	1.9
Tube Wall Thickness(min.)	(in)	0.1269
Tube Specification		SB-407
SH1 Design Data		
Total Number of Tubes		840
Total Heat Transfer Area	(ft^2)	5278
Tube OD	(in)	2
Tube Wall Thickness(min.)	(in)	0.18
Tube Specification		SA-213T22
HRSG Design Data		
Tube MW	(in)	0.18
Tube OD, avg.	(in)	2
Tube Specification		SA-178A
Total Heat Transfer Area	(ft^2)	18680
Economizer Design Data		
Tube OD	(in)	1.5
Tube MW	(in)	0.18
Tube Specification		SA-178A
Fin Material		CS
Total Number of Tubes		1408
Total Heat Transfer Area	(ft^2)	37289

Victory Energy Operations requires the gas velocity and concentration distribution at the entrance plane of the boiler system must not vary more than ±15% RMS of the average and that less than 15% of the points measured are ±15% of the average.

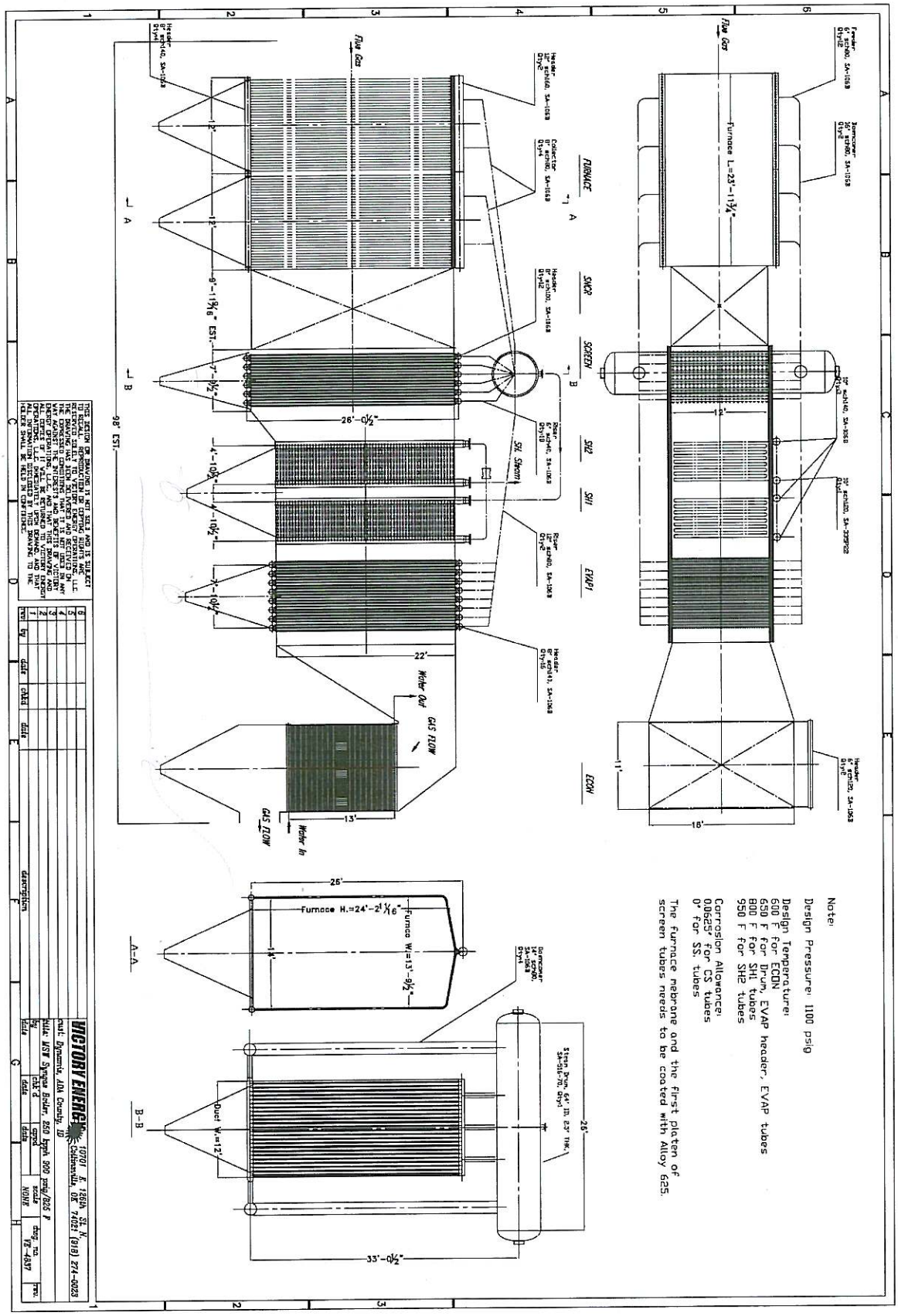
Flue Gas
Furnace L=23'-11¼"
FURNACE
SNCR
SCREEN
SH2
SH1
EVAP1
ECON
12'
18'
11'
26'-0½"
22'
13'
9'-11⅝" EST.
7'-0½"
4'-10½"
4'-10½"
7'-10½"
98' EST.
Water Out
GAS FLOW
Water In
Furnace H.=24'-2¹⁄₁₆"
Furnace W.=13'-9½"
Duct W.=12'
33'-0½"
A-A
B-B
Note:
Design Pressure: 1100 psig
Design Temperature:
600 F for ECON
650 F for Drum, EVAP header, EVAP tubes
800 F for SH1 tubes
950 F for SH2 tubes
Corrosion Allowance:
0.0625" for CS tubes
0" for SS tubes
The furnace membrane and the first platen of screen tubes needs to be coated with Alloy 625.
VICTORY ENERGY
10701 E. 126th St. N.
Collinsville, OK 74021 (918) 274-0023
cust: Dynamic, ADA County, ID
title: MSW Syngas Boiler, 250 bpph 900 psig/825 F
drawn: Gomez
date: 6/6/18
scale: NONE
dwg. no. VE-4837
rev.
chk'd
date
by
date
dwg. no.
rev.
date
by
date
dwg. no.
rev.
0
1
2
3
4
5
6
THIS DESIGN OR DRAWING IS NOT SOLD AND IS SUBJECT TO RECALL. REPRODUCTION OR COPYING RIGHTS ARE RESERVED. ALL INFORMATION DISCLOSED BY THE CONFIDENCE THAT IT IS NOT USED IN ANY WAY AGAINST US OR DISCLOSED TO OTHERS. ENERGY OPERATIONS, LLC. AND THAT THIS DRAWING AND ALL INFORMATION DISCLOSED BY THIS DRAWING TO THE INDEX SHALL BE HELD IN CONFIDENCE.

CCSolutions
Composite Cooling Solutions, L.P.

4150 International Plaza, Suite 500
Fort Worth, Texas 76109
Phone 817.246.8700
Fax 817.246.8717

www.compositecooling.com

CCSolutions
Composite Cooling Solutions, L.P.

OPERATION

AND

MAINTENANCE MANUAL

FOR

COMPOSITE COOLING SOLUTIONS, L. P.

FIBERGLASS STRUCTURED

COUNTERFLOW COOLING TOWER

PHOENIX™

COMPOSITE COOLING SOLUTIONS, L P.
4150 International Plaza Suite 500
FORT WORTH, TX 76109
TEL: (817)246-8700
FAX: (817)246-8717

louvers and reduce the ice buildup.

3. Under extended extreme cold conditions, it may be necessary to operate the fan in reverse. This forces warm air out through the louvers, melting any accumulated ice-adequate heat load must be available. Fan reversal at half speed is recommended. Reverse operation of the fan should be used sparingly and should only be used to control ice, not to prevent it. Reverse fan operation should not need to exceed 1 or 2 minutes. Monitoring is required to determine the time required to melt accumulated ice

Reverse operation of fans for prolonged periods during subfreezing weather can cause severe damage to fans and fan cylinders. Ice can accumulate inside fan cylinders at fan blade plane of rotation and fan blade tips will eventually strike this ring of ice, damaging the fan blades or cylinder. Ice can also accumulate on fan blades and be thrown off, damaging fan cylinder or blades. Allow a minimum of 10 minute delay between reverse operation and forward operation during subfreezing weather to permit ice to dissipate from fan blades and fan cylinders. See Fan Drive Caution note on page 5 for fan speed change and reversing precautions.

4. With no heat load on the circulating water, icing cannot be controlled effectively by air control during freezing weather. **Towers must not be operated with reduced water rate and or no heat load during** freezing weather. If the circulating water system cannot be shut down, water returning from the process should be made to bypass the tower. If a bypass is used, all water must be bypassed without modulation. If the water bypass is directly into the tower's cold water basin, its design must be approved by CCS engineering.

Maintenance:

Intermittent Wintertime Operation
If periods of shutdown (nights, weekend s, etc.) occur during freezing weather, measures must be taken to prevent the water in the cold water basin- and all exposed pipe work-from freezing.

Unless some means of freeze prevention is incorporated into your system, the tower basin and exposed pipe work should be drained at the beginning of each wintertime shutdown period.
If tower basin is drained, verify that all basin heaters have been shut off either by automatic cutoff or disconnect switch.
It is recommended that you discuss your freeze prevention options with your local CCS Sales Manager.

Water Treatment and Blowdown

Maintaining Water Quality
The materials used in your tower are selected to offer long, corrosion-free service in a "normal" cooling tower environment, defined as follows: Circulating water with a p H between 6.5 and 9; a chloride content (as NaCi) below 750 ppm; a sulfate content (SO 4) below 1200 ppm; carbonate or bicarbonates below 300 ppm (as CaC03); a maximum inlet water temperature not to exceed 120'F (49'C); no significant contamination with unusual chemicals or foreign substances; and adequate water treatment to minimize scaling,

Startup Conditions: The water conditions during the initial tower operation are crucial in preventing premature corrosion of galvanized steel (white rust). For at least the first eight weeks of operation, p H should be controlled between 6.5 and 8.0 with hardness and alkalinity levels between 100 and 300 ppm (expressed as CaCO,). Chlorine if added intermittently, with a free residual not to exceed 1 ppm-maintained for short periods. Free residual should not exceed 0.4 ppm if chlorine is added continuously. Excessive chlorine levels may deteriorate sealants and other materials of construction.

Quality Guidelines for Chemically Treated Circulating Water

The following table indicates the recommended circulating water quality to insure long life of the tower components.

Water Property	Recommended Level
PH	6.5 to 9.0
Temperature	125° F Maximum
Hardness as $CAC0_3$	30 to 750 ppm
Alkalinity as $CAC0_3$	500 ppm maximum
Total Dissolved Solids	1500 ppm maximum
Conductivity	2400 microm H05
Chlorine	1.0 ppm intermittent and 0.5 ppm continuously
Chlorides	250 ppm maximum as Cl 410 ppm maximum as NaC1
Sulfates	250 ppm maximum
Silica	150 ppm as $Si0_2$
Manganese	0.1 ppm
Oil, Fats, Grease	Zero for film fill towers
Solvents	None
Nitrates	300 ppm maximum
Suspended Solids	25 ppm maximum for film fill
Bacteria Count	Less than 10,000 CFU/ml for film fill

Maintenance

Cooling tower cleaning

Any evaporative-type cooling tower must be thoroughly cleaned on a regular basis to minimize the growth of bacteria, including Legionella Pneumophilia, to avoid the risk of sickness or death. Service personnel must wear proper personal protective equipment during decontamination. Do NOT attempt any service unless the fan motor is locked out.

Operators of evaporative cooling equipment, such as water cooling towers, should follow maintenance programs which will reduce to an absolute minimum the opportunity for bacteriological contamination. Public Health Service officials have recommended that "good housekeeping" procedures be followed, such as: regular inspections for concentrations of dirt, scale, and algae; periodic flushing and cleaning ; and the following of a complete water treatment program including biocidal treatment.

The visual inspection should take place at least once a week during the operating season. The periodic flushing and cleaning should be done before and after each cooling season, but in any event at least twice a year. The hot water basins and nozzles, louvers, drift eliminators, and easily accessible fill surfaces should be flushed by use of a moderate-pressure water nozzle, being careful not to cause physical damage. A reliable water treatment program should be installed and maintained. Filtration devices may be employed to reduce the suspended solid s concentrations, thus increasing the effectiveness of the water treatment program.

Blowdown

A cooling tower cools water by continuously causing a portion of it to evaporate. Although the water lost by evaporation is replenished by the makeup system, it exits the tower as pure water-leaving behind its burden of dissolved solids to concentrate in the remaining water. Given no means of control, this increasing concentration of contaminants can reach a very high level.

Maintenance

Blowdown Rate

Cooling Range (°F)	Two Concentrations	Four Concentrations
10	0.7%	0.17%
15	1.1%	0.30%
20	1.5%	0.43%

Range = difference between hot water temperature entering the tower & cold water temperature leaving the tower.

In order to achieve water quality which is acceptable to the cooling tower (as well as the remainder of your circulating water system), the selected water treatment company must work from a relatively constant level of concentrations. This stabilization of contaminant concentrations is usually accomplished by blowdown, which is the constant discharge of a portion of the circulating water to waste. As a rule, acceptable levels on which to base a treatment schedule will be in the range of 2 -4 concentrations. The table above gives approximate rates of blowdown (percent of total water flow rate constantly wasted) to achieve those concentrations at various cooling ranges.

When water treatment chemicals are added, they should not be introduced into the circulating water system via the cold water basin of the cooling tower. Water velocities are lowest at the point, which results in inadequate mixing.

Schedule of Tower Maintenance

Included in the instruction packet are separate User Manuals on each major operating component of the tower, and it is recommended that you read them thoroughly. Where discrepancies may exist, the separate User Manuals will take precedence.

The following is recommended as a minimum routine of scheduled maintenance:

Always shut off electrical power to the tower fan motor prior to performing any inspections that may involve physical contact with the mechanical of electrical equipment in or on the tower. Lock out and tag out any electrical switches to prevent others from turning the power back on. Service personnel must wear proper personal protective clothing and equipment.

Daily: Observe, touch and listen to the tower for a few moments each day. Become accustomed to its normal appearance, sound and level of vibration. Abnormal aspects relating to the rotating equipment should be considered reason to shut down the tower until the problem can be located and corrected.

Maintenance
Weekly: Observe operation of the motor, drive shaft, gear box and fan. Become familiar with the normal operating temperature of the motor, as well as the sight and sound of all components as a whole. Shut off the fan for a few minutes, check the level of oil in the gear box. Add oil as necessary. Check system for leaks if the amount of oil required appears unusual. (If oil is added at the external fill port, allow adequate time for the level to stabilize before reading final level.)

Inspect louvers and basin trash screens, and remove any debris which may have accumulated. Replace any damaged or worn out components. Use of high-pressure water may damage the eliminator and louver material.

Check for any buildup of slit on the floor of the cold water basin. Mentally note the amount, if any, so future inspections will enable you to determine the rate at which it is forming.

Inspect for bacterial growth and general operating conditions. Bacterial growth should be reported to your water treatment expert for immediate attention. **Monthly:** Check Gear Box oil sample for presence of water and /or sludge. Make sure vents are open. **Semi-Annually:** Drain Gear Box and refill with fresh oil, as outlined in the gearbox manual. If sludge is present in the oil flush gearbox before refilling.

Oil changes have been reduced to 5-year intervals when using synthetic oil. Designed specifically for gear boxes. If, after five years, turbine-type mineral oil is used, the oil must be changed semi-annually. Refer to Gear Box Manual.

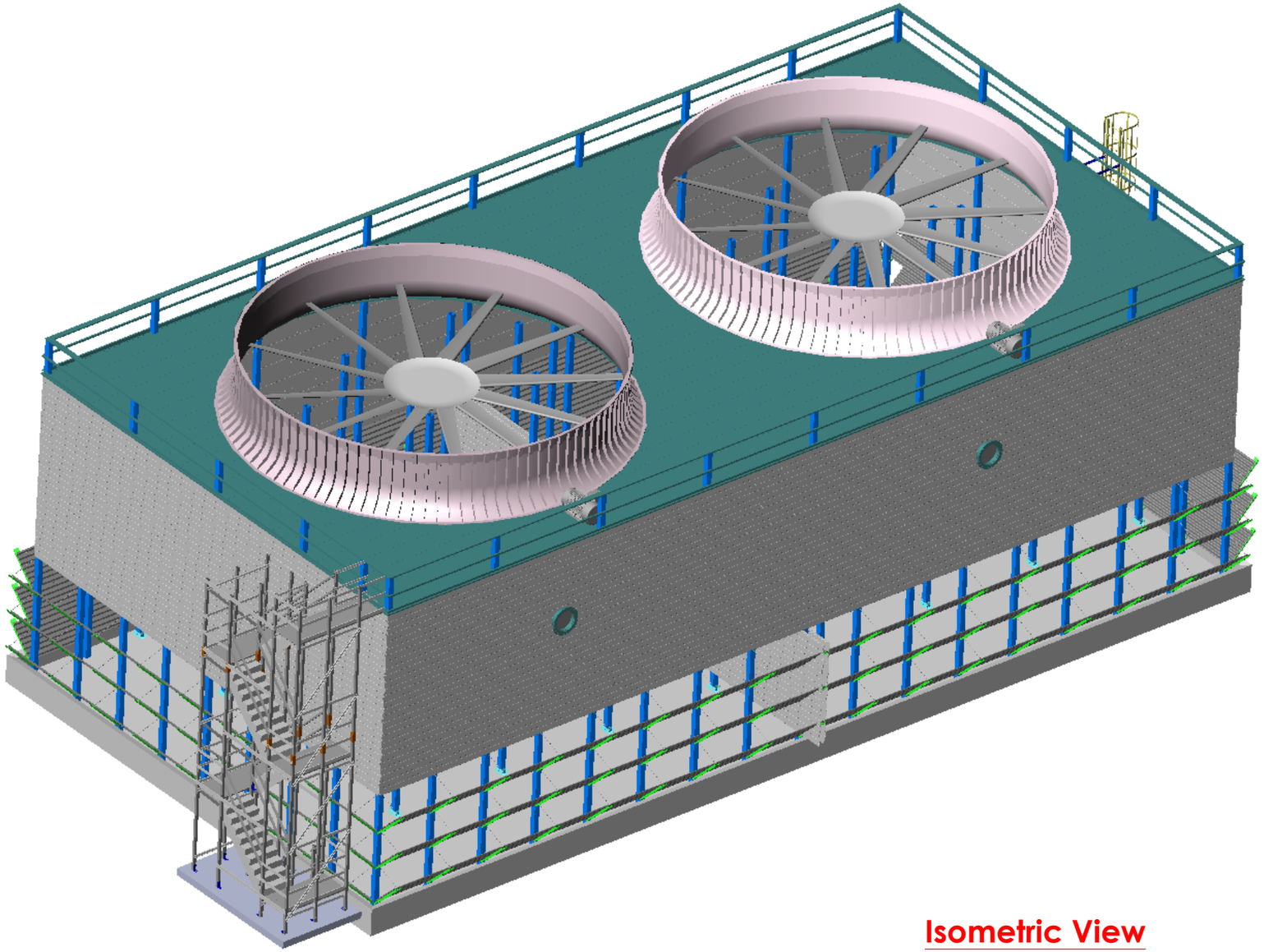

Isometric View

DYNAMIS
IDAHO
2-FT-4646-200-P7-FM
GPM/CELL = 8500 ~ TOTAL GPM = 17000
97° F HWT ~ 71° F CWT ~ 63° F WBT

GENERAL NOTES:

1. INLET FLANGE IS NOT TO CARRY ANY OTHER PIPING LOADS.
2. PUMP HEAD REQUIRED FROM INTERFACE POINT OF CCS FURNISHED PIPE IS 4'-0".
3. BASIN, DRAIN, MAKE-UP, OUTLET, AND OVERFLOW ARE BY OTHERS.
4. HYDRAULIC DESIGN OF BASIN AND BASIN PIPING ARE BY OTHERS.
5. ANY MODIFICATIONS OR CHANGES TO INTERFACE PIPING CONNECTIONS AS SHOWN BY CCS GENERAL ARRANGEMENT DRAWINGS MAY RESULT IN MANUFACTURING DELAYS AND/OR CONTRACT ADJUSTMENT.
6. DO NOT SCALE FROM THESE DRAWINGS.

PROPRIETARY AND CONFIDENTIAL
THE INFORMATION CONTAINED IN THIS DRAWING IS THE SOLE PROPERTY OF COMPOSITE COOLING SOLUTIONS. ANY REPRODUCTION IN PART OR AS A WHOLE WITHOUT THE WRITTEN PERMISSION OF COMPOSITE COOLING SOLUTIONS IS PROHIBITED.

REVISION

NUM	DATE	DESCRIPTION	BY	CHK'D

CCSolutions Composite Cooling Solutions, L.P. **Composite Cooling Solutions**

General Arrangement
Isometric View

DWG. NO. KD-11122

DRAWN	CHECKED	APPROVED	DATE	REV.
TLS	BB	KD	2/22/2012	0

DO NOT SCALE DRAWING | SCALE:1:126 | SHEET 1 OF 6

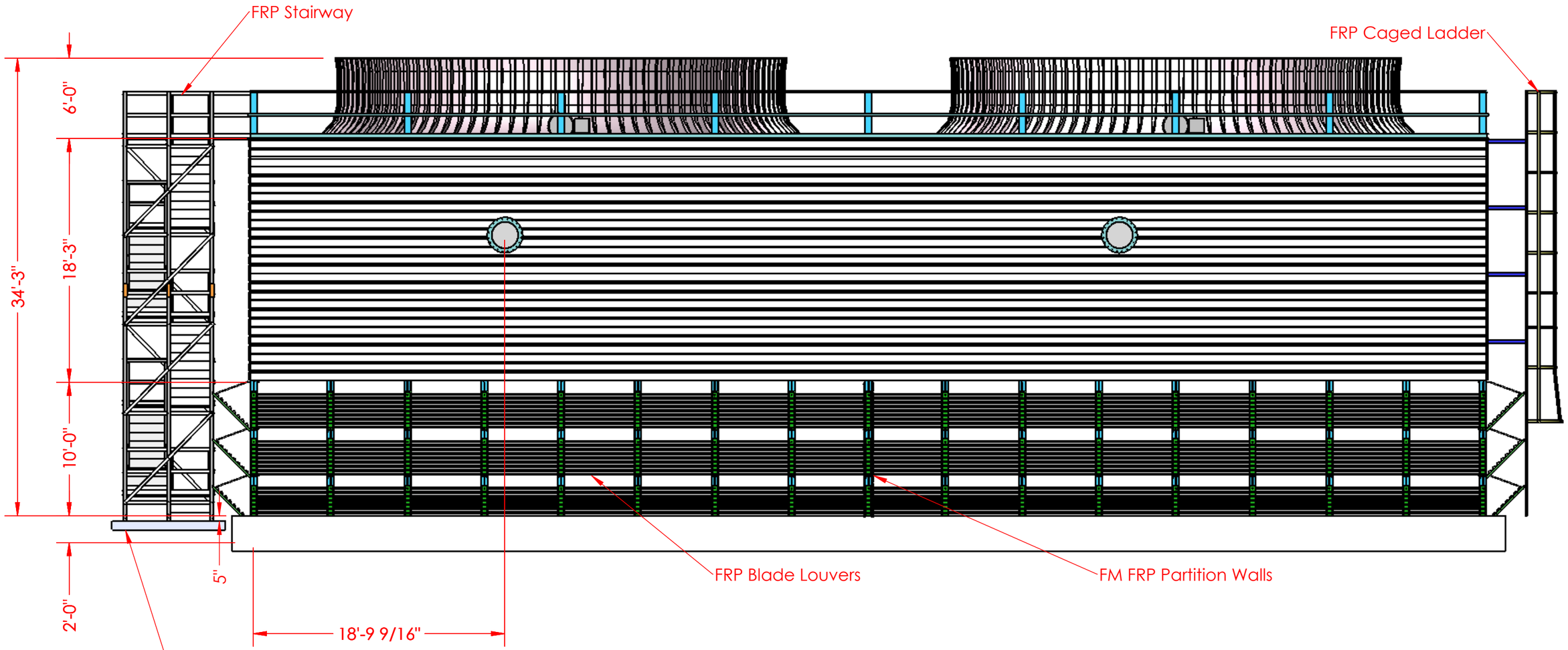

Front View

DYNAMIS
IDAHO
2-FT-4646-200-P7-FM
GPM/CELL = 8500 ~ TOTAL GPM = 17000
97° F HWT ~ 71° F CWT ~ 63° F WBT

IMPORTANT NOTE:
The thermal design of this tower is based upon an unobstructed horizontal air inlet that is equal to the tower air inlet height

PROPRIETARY AND CONFIDENTIAL
THE INFORMATION CONTAINED IN THIS DRAWING IS THE SOLE PROPERTY OF COMPOSITE COOLING SOLUTIONS. ANY REPRODUCTION IN PART OR AS A WHOLE WITHOUT THE WRITTEN PERMISSION OF COMPOSITE COOLING SOLUTIONS IS PROHIBITED.

REVISION

NUM	DATE	DESCRIPTION	BY	CHK'D

CCSolutions Composite Cooling Solutions, L.P. — Composite Cooling Solutions

General Arrangement
Front View

DWG. NO. KD-11122

DRAWN	CHECKED	APPROVED	DATE	REV.
TLS	BB	KD	2/22/2012	0

DO NOT SCALE DRAWING | SCALE:1:91 | SHEET 2 OF 6

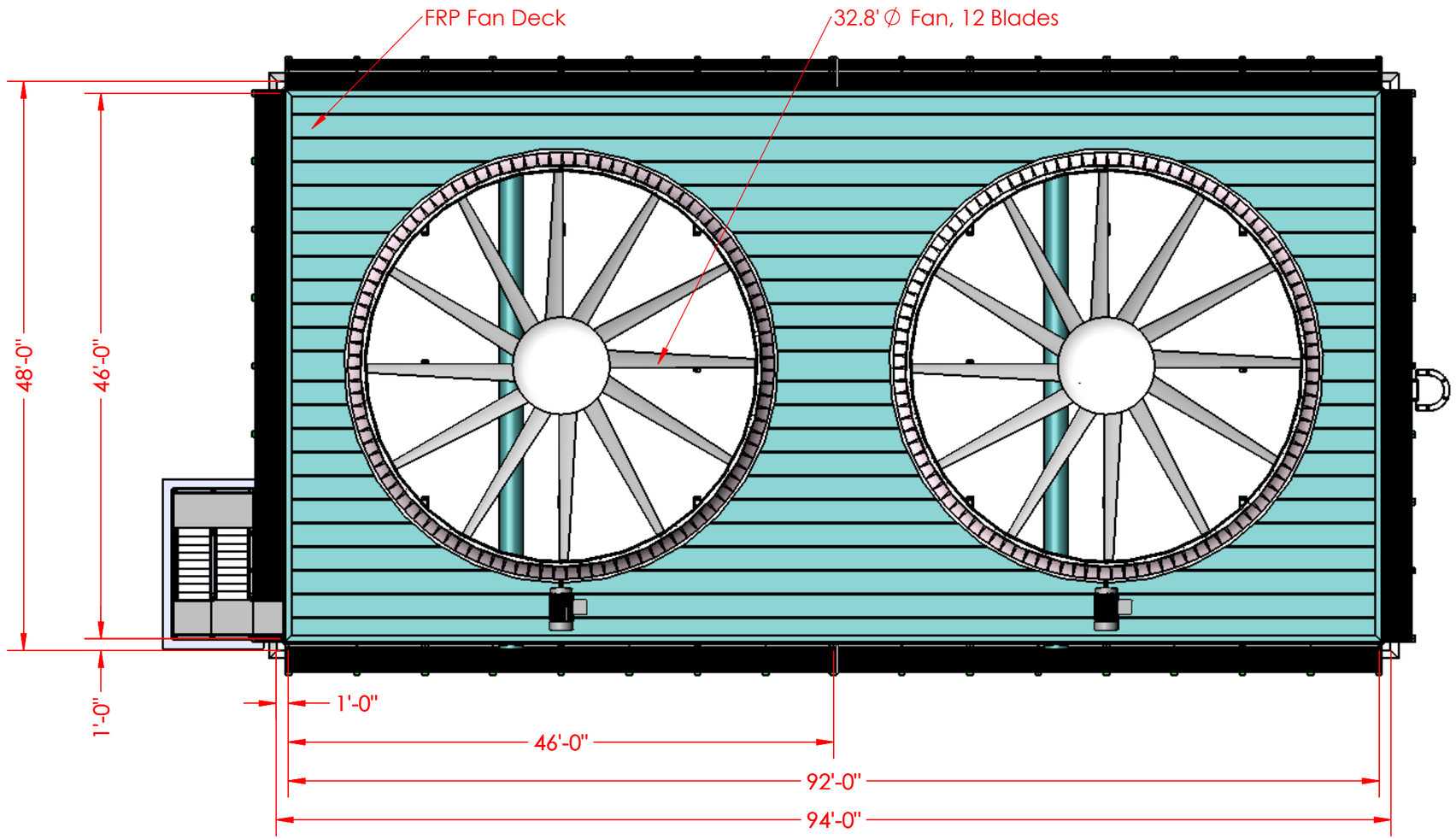

Top View

DYNAMIS
IDAHO
2-FT-4646-200-P7-FM
GPM/CELL = 8500 ~ TOTAL GPM = 17000
97° F HWT ~ 71° F CWT ~ 63° F WBT

PROPRIETARY AND CONFIDENTIAL
THE INFORMATION CONTAINED IN THIS DRAWING IS THE SOLE PROPERTY OF COMPOSITE COOLING SOLUTIONS. ANY REPRODUCTION IN PART OR AS A WHOLE WITHOUT THE WRITTEN PERMISSION OF COMPOSITE COOLING SOLUTIONS IS PROHIBITED.

REVISION

NUM	DATE	DESCRIPTION	BY	CHK'D

CCSolutions Composite Cooling Solutions, L.P.

Composite Cooling Solutions

General Arrangement Drawing
Top View

DWG. NO. KD-11122

DRAWN	CHECKED	APPROVED	DATE	REV.
TLS	BB	KD	2/22/2012	0

DO NOT SCALE DRAWING | SCALE:1:131 | SHEET 3 OF 6

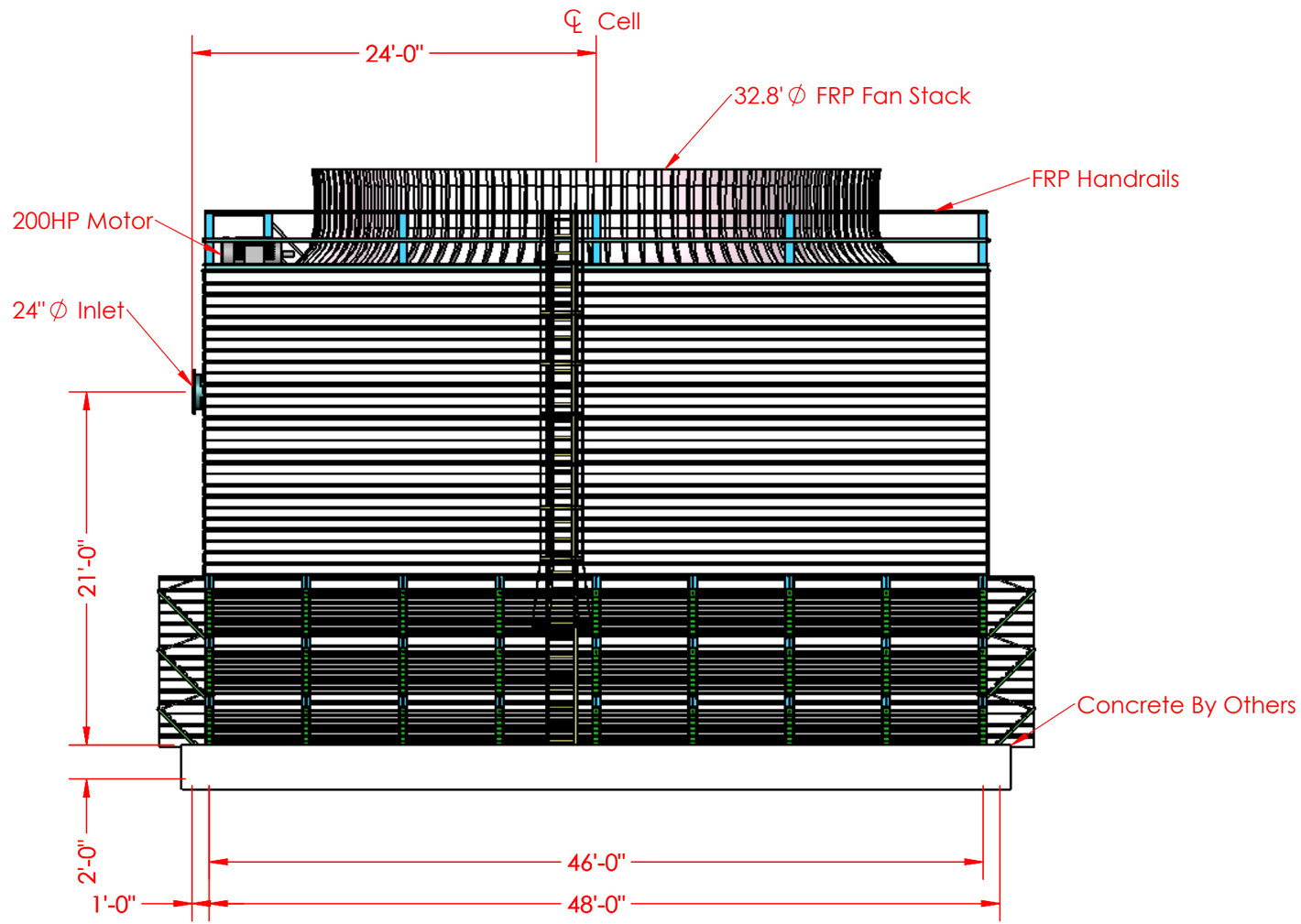

End View

DYNAMIS
IDAHO
2-FT-4646-200-P7-FM
GPM/CELL = 8500 ~ TOTAL GPM = 17000
97° F HWT ~ 71° F CWT ~ 63° F WBT

PROPRIETARY AND CONFIDENTIAL
THE INFORMATION CONTAINED IN THIS DRAWING IS THE SOLE PROPERTY OF COMPOSITE COOLING SOLUTIONS. ANY REPRODUCTION IN PART OR AS A WHOLE WITHOUT THE WRITTEN PERMISSION OF COMPOSITE COOLING SOLUTIONS IS PROHIBITED.

REVISION

NUM	DATE	DESCRIPTION	BY	CHK'D

CCSolutions Composite Cooling Solutions, L.P. **Composite Cooling Solutions**

General Arrangement
End View

DWG. NO. KD-11122

DRAWN	CHECKED	APPROVED	DATE	REV.
TLS	BB	KD	2/22/2012	0

DO NOT SCALE DRAWING | SCALE:1:99 | SHEET 4 OF 6

Donaldson
Filtration Solutions

Donaldson Company, Inc.
Industrial Air Filtration
1400 West 94th Street
Bloomington, MN
55431-2370

Mailing Address:
P.O. Box 1299
Minneapolis, MN
55440-1299 U.S.A.

Tel 952-887-3847
Fax 952-698-2479
www.Donaldson.com
www.donaldsontorit.com

Dynamis Energy, LLC
Attn: K. Patrick Silveira
Address: 776 E Riverside Drive, Suite 150

April 25, 2012

Reference: Dynamis Energy, LLC Emission Guarantee for a Donaldson® Torit® Model DFO 3-24 Dust Collector with Ultra-Web® Filters.

Equipment	One Donaldson Torit Model DFO 3-24 dust collector equipped with (24) Ultra-Web filters.
Application	Waste-to-Energy Facility
Dust	Flyash
Inlet Loading	< 2 gr/dscf
Air Volume	14,000 ACFM
Gas Stream	Operating temperature of 100°F with a maximum temperature of 150°F
Collector Location	Outdoors
Collector Exhaust	Outdoors

The Donaldson® Torit® Model DFO 3-24 Collector equipped with 24 Donaldson Torit Ultra-Web® filters offers a net filtration area of 4560 square feet. Dividing the actual air volume by the filtration area provides a net air-to-media ratio of 3.07:1. Based on the Donaldson Torit Model DFO 3-24 Collector being installed and operated in accordance with the DFO Installation, Operation, and Maintenance Manual; accepted industrial ventilation practices; and under the conditions stated above, we are offering the following emission guarantee utilizing Donaldson Torit Ultra-Web filters. This guarantee does not cover filter failure due to negligence or improper operation and specifically excludes failure due to exceeding the recommended air-to-media ratio; damage due to fire, corrosion, abrasion or physical abuse; wet or oily compressed air usage, or the lack of adequate compressed air for proper filter cleaning.

Emission: The maximum average particulate emissions in the discharge gas stream from the Donaldson Torit DFO 3-24 Collector using the Donaldson Torit Ultra-Web filters will not exceed 0.005 grains per dry standard cubic foot of particulate matter 2.5 microns or smaller over the life of the media.

The guarantee period ends after 4000 hours of operation or 12 months from the date of shipment, whichever is shorter. This provides ample time to confirm performance meets the stipulated thresholds in this document.

[The emissions portion of this warranty requires that all emission testing be performed by a qualified testing agency agreed upon by Donaldson Company and Dynamis Energy, LLC. Such testing will be performed in accordance with recognized testing procedures, agreed upon by both Donaldson Company and Dynamis Energy, LLC. Fees for the testing will be the responsibility of Dynamis Energy, LLC.]

Pressure Drop: Average pressure drop not to exceed 6.0 inches of water gauge on a continual basis as measured across Donaldson Torit Ultra-Web filter media and tube sheet of the Torit DFO 3-24 collector.

During the warranty period, Donaldson Company reserves the right to make any modifications, adjustments or take other necessary corrective actions, at Donaldson's expense, should the guarantee not be met by equipment malfunction due to defects in materials and/or workmanship as supplied by Donaldson Company. In no event shall Donaldson Company be liable for incidental, special or consequential damages resulting from nonconformity. Failure to use genuine Donaldson replacement parts or changes to the original system, either process or engineering, will cancel this guarantee.

Regards,

Hube Visee

IAF National Sales Director

Guarantee Number: 12CK0406 Dynamis Energy, LLC

Donaldson®
Torit®

Downflo® Oval Dust Collectors

POWERED BY
ULTRA-WEB®
High Efficiency Nanofiber Filters Built to Last

Donaldson

Downflo® Oval

A Family Of Over-Achievers

The high performance Downflo® Oval (DFO) family of over-achieving dust collectors provides up to 25 percent more filtration capacity than other same-sized cartridge collectors. Powered by patented Ultra-Web® nanofiber filtration technology, DFO delivers cleaner air, up to two times longer filter life, and greater cost savings.

The DFO advantage is found in the collector's patented design and components. The combination of a new cabinet design that greatly lowers cabinet velocities, patented Extra-Life™ cleaning technology, and Ultra-Web nanofiber filters allows more airflow through the collector without increasing the size of the footprint or damaging the filters.

A smaller collector helps lower the initial purchase price, reduces filter replacement costs and opens up valuable manufacturing floor space.

25% MORE CAPACITY

DFO Offers:

- **Lower initial cost per cubic foot of air per minute (cfm)**
- **Higher efficiency - cleaner air**
- **Lower pressure drop - greater energy savings**
- **Fewer filter changeouts**
- **Reduced filter disposal cost**
- **Easy system set-up**
- **Less maintenance**
- **10-year warranty**

DFO 3-18

Downflo® Oval

Outperforms All Other Collectors

DFO collectors offer some strong benefits that distinguish them from all other collectors available in the market today.

- **Easy to use** Quick-release handles provide easy cover removal and faster filter access.
- **Compact** Smaller footprints for applications that require maximum cleaning efficiency in even smaller spaces.
- **Powerful** DFO collectors provide 25 percent more capacity than same-sized dust collectors.
- **Cost effective** The patented ExtraLife™ Filter Cleaning System averages up to 30 percent increase in pulse cleaning energy for unmatched cleaning ability.
- **Innovative** Unique oval-shaped Ultra-Web® cartridge filters provide the longest filter life and highest filtration efficiency — which lowers cost.

DFO 2-4

DFO 3-3

Downflo® Oval

Sizes & Operations

Normal Operations For Models 1-1, 2-2 and 3-3

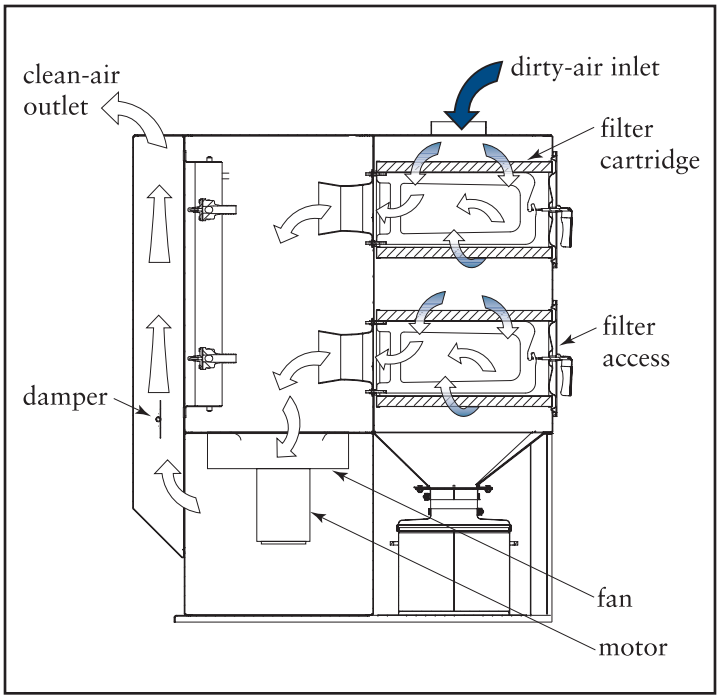

DFO 1-1

DFO Models 1-1, 2-2 and 3-3

- Incorporate several exclusive and unique features
- Completely self-contained, “plug-and-play” type units
- Packaged with power pack, controls, silencer, damper, dust container and more
- Remarkably quiet operation
- Exceptionally compact design
- Easily movable through standard aisles and doorways

Downflo® Oval

Sizes & Operations

Normal Operations For Models 2-4 Through 4-128

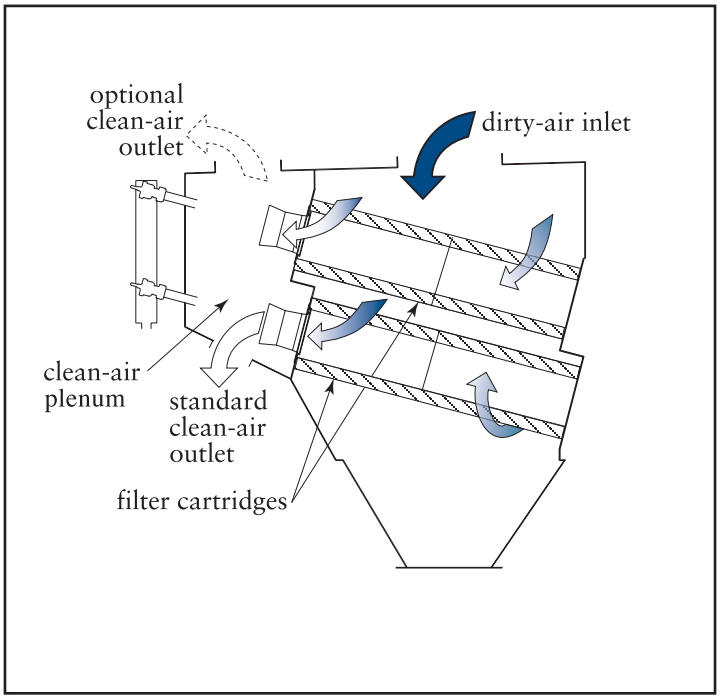

DFO Models 2-4 to 4-128

- 23 standard model sizes
- Customized sizes available
- Many options and accessories
- Exceptionally compact design
- Highest energy savings

Simply the Best

Dust Collectors Available

DFO Technology Unfolds

The Remarkable Story of DFO Begins with the Oval Cartridge and Patented Technology

Patented Technology That Performs Proven and patented Ultra-Web technology delivers longer filter life, cleaner air and greater cost savings than other types of cartridge filter media. Made with an electrospinning process that produces a very fine, continuous fiber of 0.2-0.3 micron in diameter, Ultra-Web nanofibers form a permanent web-like net with very fine interfiber spaces that trap dust on the surface of the media.

Nanofiber Media

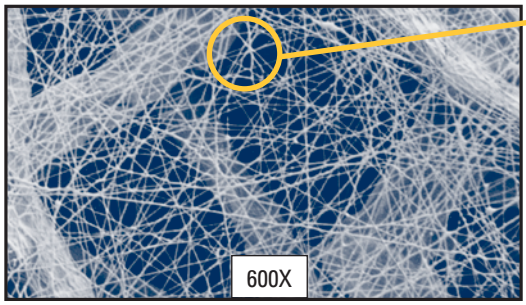

Nanofiber technology is available in all Ultra-Web and Fibra-Web filter cartridges.

10 micron

Commodity Filter Media

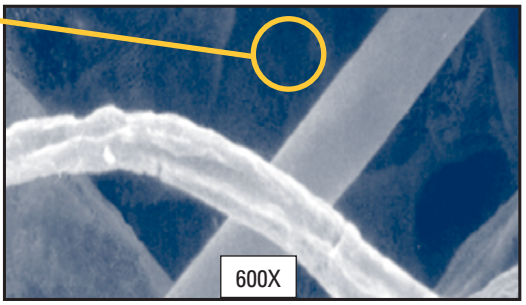

Conventional media has spaces of up to 60 microns between fibers, allowing dust to become deeply embedded.

The Innovation Continues with DFO's Shorter, Stiffer Filter Pleats

DFO Filter Media Pleats Shorter and stiffer filter pleats help minimize dust entrapment and simplify filter cleaning. By reducing the height of the filter pleats from the standard 2 inches to 1.5 inches, the pleat wall is less likely to collapse or bend, which can encapsulate dust and prevent its expulsion.

Downflo Oval Filter

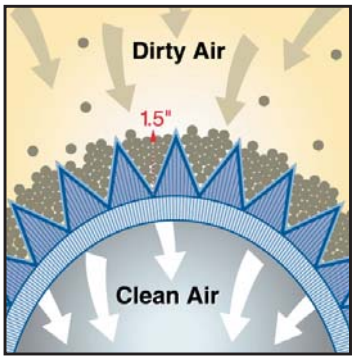

Standard Filter

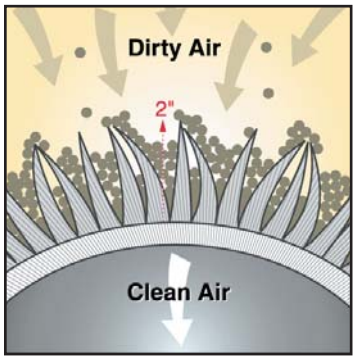

More Airflow, Less Filter Media

Unique Oval Shape Contributes to Higher Airflow Capacity

High Performance Filters The Downflo Oval filter design is a reflection of Donaldson Torit's commitment to technical research and development. Oval-shaped filters handle up to 25 percent more airflow without increasing velocities, which can cause filter abrasion. Sophisticated FLUENT®* Airflow Modeling Software revealed that oval-shaped cartridge filters have fewer areas of high velocity, resulting in a lower potential for media abrasion and increased filter life.

Downflo Oval Collector: 9145 cfm

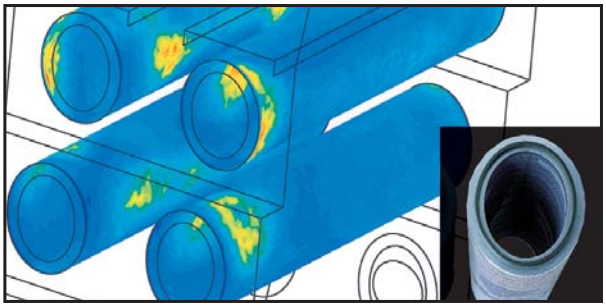

Standard Collector: 7315 cfm

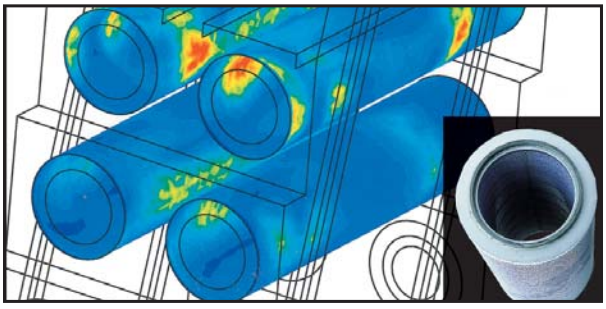

Airflow Breakthroughs Lead To A New Chapter In Filtration Performance

Sophisticated Modeling Computer modeling for fluid dynamics, structural mechanics and acoustics puts DFO models 1-1, 2-2, and 3-3 in a technical class all their own. The illustration below (left) shows how FLUENT Flow Modeling Software enhanced the uniform air velocity distribution through model DFO 3-3. ANSYS®* Structure Analysis Software shown below (right) demonstrates lowest stress levels and deflections for model DFO 3-3 under typical operating pressures.

DFO 3-3 Air Velocity Distribution

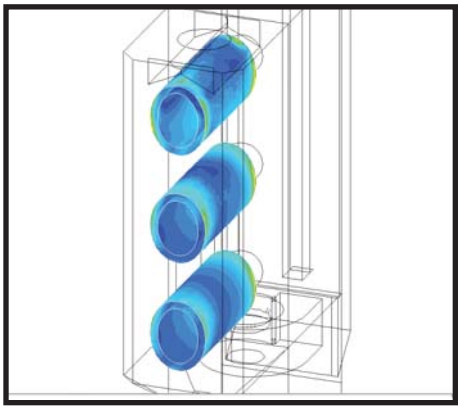

DFO 3-3 Stress and Deflections Model

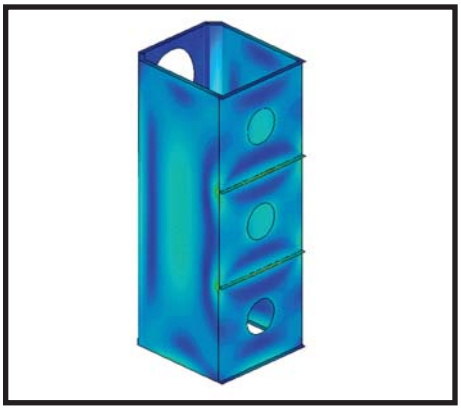

* FLUENT is a registered trademark of Fluent, Inc.; ANSYS is a registered trademark of ANSYS, Inc.

Downflo® Oval

Better Filtration, Prolonged Filter Life

Technical Discoveries Improve Filtration Performance And Prolonged Filter Life

Convex Side Walls A new cabinet design with convex side walls streamlines the airflow path and increases the cabinet's cross-sectional area. The convex side walls provide more space between filters, lower cabinet velocities and reduce the potential for media abrasion.

Cross-Sectional Areas

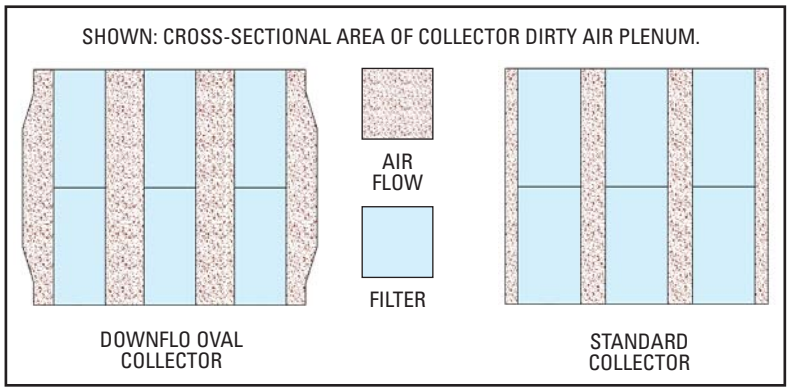

Pulse Cleaning Technology ExtraLife Filter Cleaning System uses proprietary, computer-modeled pulse cleaning technology to easily "pulse off" dust from the surface of the filter, improving filtration efficiency and prolonging filter life. The red lines in the illustration show the increased pressure at the front of the Downflo filter generated by the ExtraLife system. The blue line shows the pulse signature of a standard cartridge collector.

Downflo Pulse Pressure Gradients

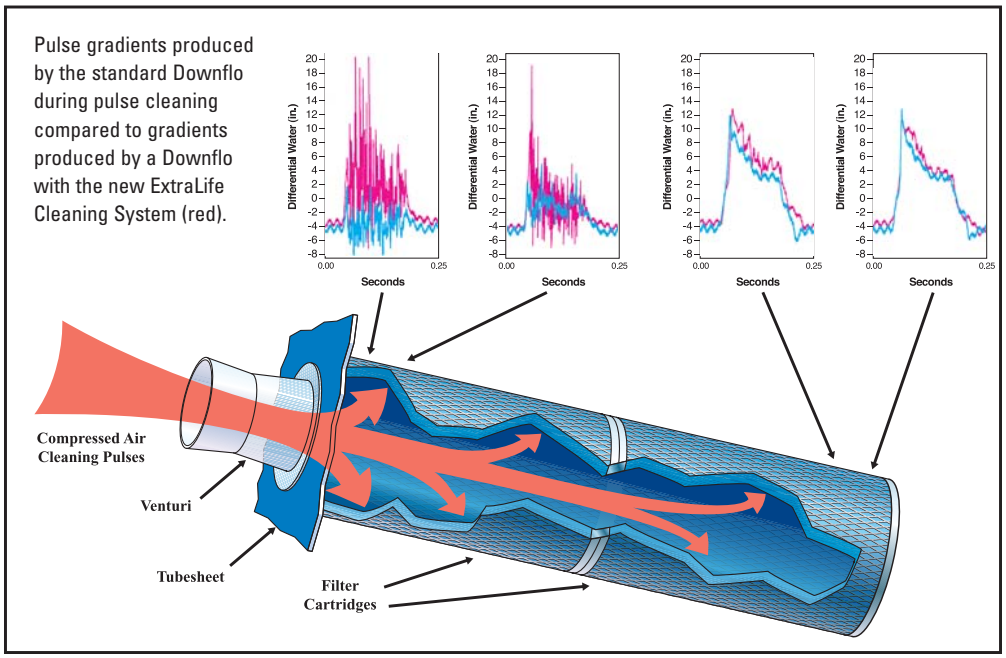

Filter Changes and Discharge Maintenance

Easy Maintenance With the new design of the DFO's quick-release access handles, filter removal and maintenance is extremely fast with one simple movement of the clamp.

Bag-In/Bag-Out Arrangements Improve filter changeouts and hopper discharge maintenance, help minimize worker exposure to potentially harmful dusts, and reduce exposure of contaminants to the atmosphere.

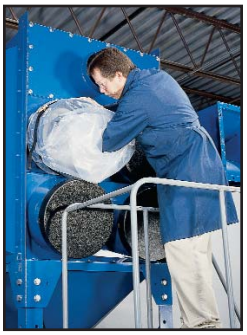

- Porthole covers protect changeout bags and provide a clean appearance.
- Heavy-duty plastic bags hold filters and function as gloves during the changeout procedure.
- Filters are disposed of in a sealed bag.
- Bag-in/Bag-Out drum arrangement is safely held in place through drum latches and hose clamps.

Downflo® Oval

Operating Advantages & Conditions

DFO Models	1-1	2-2	3-3	2-4 through 4-128
Horse Power	1.5	3	5	**
Sound Level dB(A)*	68	68	70	**
External Static Pressure ("wg)	***	***	***	**
Housing Construction (gauge)	12	12	12	10 (collector) 7 (tubesheet)
Housing Rating (inches H_2O)	-20	-20	-20	-20
Wind Load Rating (mph)	–	–	–	100
Seismic Rating (zone)	4	4	4	4
Compressed Air Required (psig)	60	60	60	2-4, 3-6: 60 2-8 and up: 90-100
Electrical Power Valves/Controls	120 VAC, 50/60 Hz	120 VAC, 50/60 Hz	120 VAC, 50/60 Hz	120 VAC, 50/60 Hz

* Sound measurements were taken in a hemianachoic chamber and under free field conditions and do not reflect the influences of actual operating environments. Standard sound pressure levels were taken at an operator position of 1.5 m high and 1 m from source.

** Provided through Donaldson Torit fan program.

*** See system performance curves on page 9.

Addressing Safety Concepts

Donaldson Torit manufactures or partners with experts to provide solutions for critical processes where harmful particulate must be controlled.

- Explosion Relief Panels (with or without weather domes)
- Suppression Systems
- Reinforced Housing Construction

U.S. Patents 6,364,921; 6,488,746; 6,387,162; 6,368,388; 4,395,269; 5,562,746; 5,882,379; 6,955,755; 6,924,028; 6,716,274; 6,743,273

System Curves For DFO Models 1-1, 2-2 and 3-3

Powerful Performance Unlike other technologies that require upgrades for more demanding applications, each DFO 1-1, 2-2 and 3-3 footprint comes standard with a unique high performance power pack. The system performance graphs below show the fan performance with clean filters. The curve indicates available external static pressure to the unit.

DFO 1-1 1.5HP 60Hz with 6 in. inlet duct (clean filter)

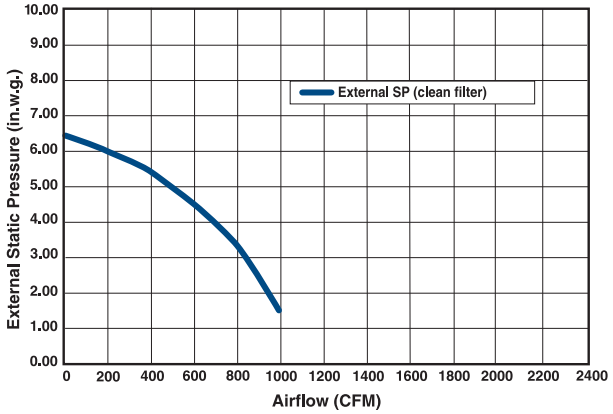

DFO 1-1 3HP 50Hz with 6 in. inlet duct (clean filter)

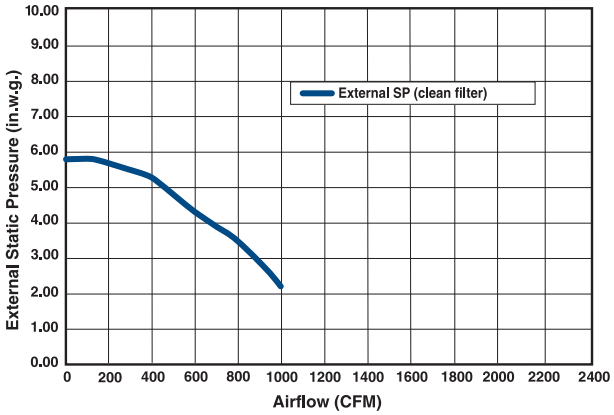

DFO 2-2 3HP 60Hz with 8 in. inlet duct (clean filters)

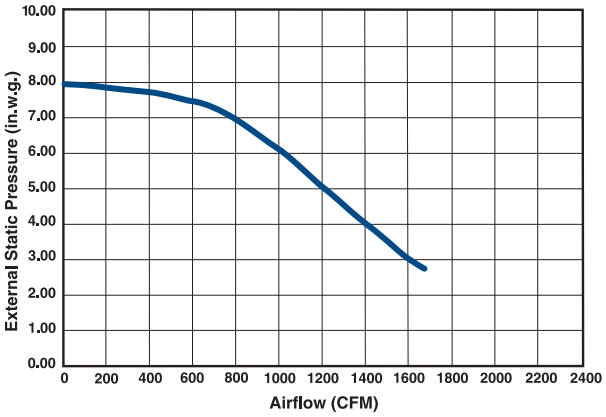

DFO 2-2 3HP 50Hz with 8 in. inlet duct (clean filters)

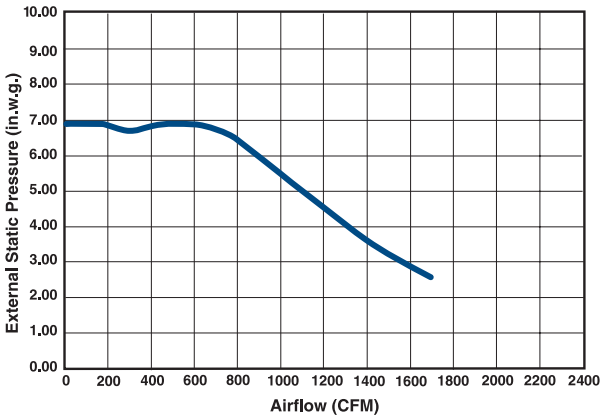

DFO 3-3 5HP 60Hz with 9 in. inlet duct (clean filters)

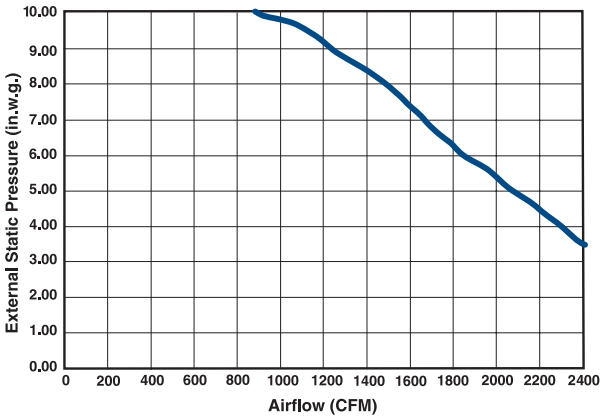

DFO 3-3 5HP 50Hz with 9 in. inlet duct (clean filters)

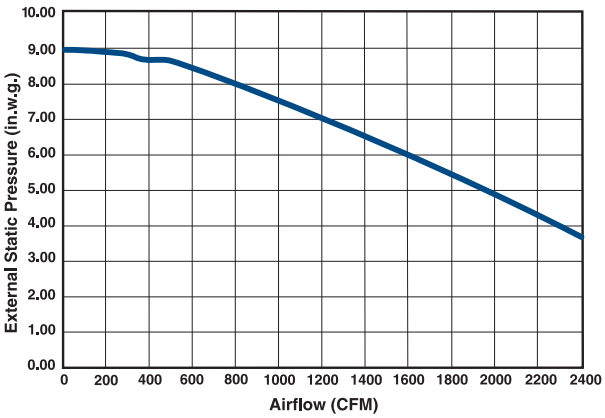

Downflo® Oval

Dimensions & Specifications

BASE MODULES 1-1, 2-2 & 3-3

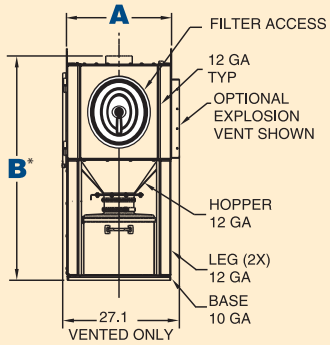

Front View
DFO 1-1

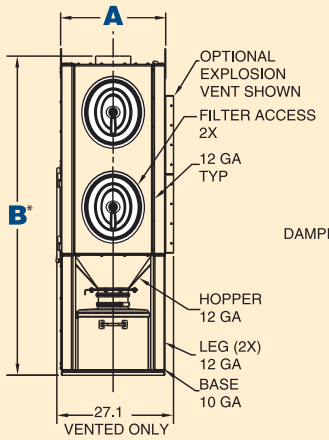

Front View
DFO 2-2

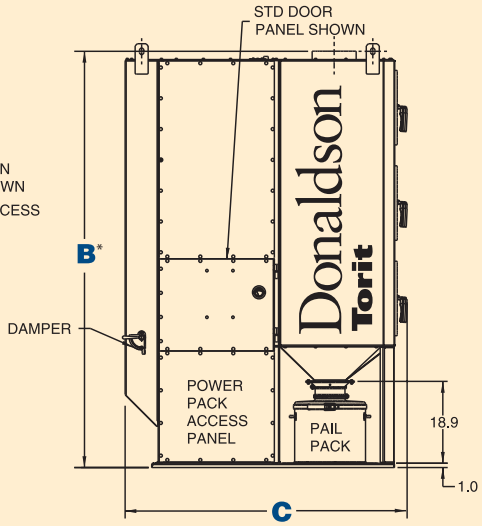

Left Side View
DFO 3-3

* Top of inlets.

BASE MODULES 2-4 THROUGH 4-128

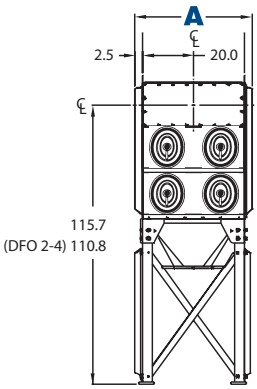

Front View
DFO 2-Models

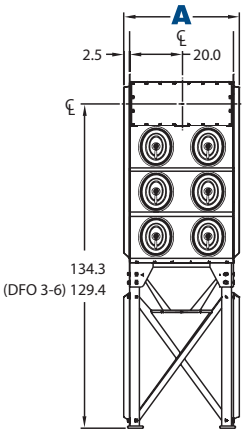

Front View
DFO 3-Models

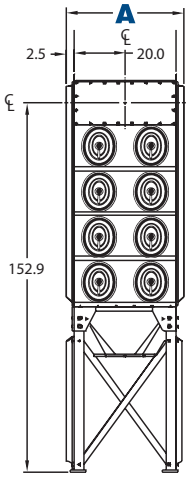

Front View
DFO 4-Models

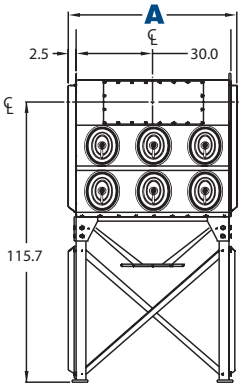

Front View
DFO 2-12
(3-Wide Models)

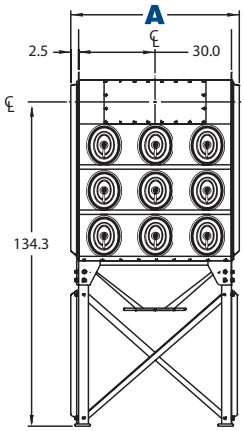

Front View
DFO 3-18
(3-Wide Models)

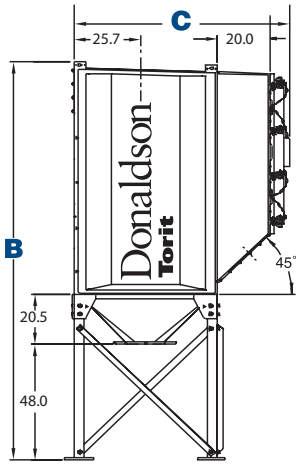

Right Side View
All Models

Downflo® Oval

Dimensions & Specifications

Model*	Nominal Airflow Range** (cfm)	No. of Filters	Ultra-Web Filter Area (ft^2)	No. of Valves	Shipping Weight (lbs)	Dimensions (inches) A	B	C
DFO 1 - 1	100-800	1	190	1	774	25.0	52.0	65.0
2 - 2	200-1,600	2	380	2	974	25.0	74.0	65.0
3 - 3	300-2,400	3	570	3	1,274	25.0	96.0	65.0
DFO 2 - 4	380-3,190	4	760	4	1,125	45.0	118.8	62.0
2 - 8	760-6,380	8	1,520	4	1,570	45.0	127.8	84.0
2 - 12	1,140-9,580	12	2,280	6	2,110	65.0	127.8	84.0
2 - 16	1,520-12,770	16	3,040	8	3,140	85.0	127.8	84.0
2 - 24	2,280-19,150	24	4,560	12	4,220	125.0	127.8	84.0
2 - 36	3,420-28,730	36	6,840	18	6,330	185.0	127.8	84.0
DFO 3 - 6	570-4,790	6	1,140	6	1,395	45.0	137.4	62.0
3 - 10	950-7,980	10	1,900	5	1,930	45.0	146.5	84.0
3 - 12	1,140-9,580	12	2,280	6	2,020	45.0	146.5	84.0
3 - 18	1,710-14,370	18	3,420	9	2,830	65.0	146.5	84.0
3 - 24	2,280-19,150	24	4,560	12	3,285	85.0	146.5	84.0
3 - 36	3,420-28,730	36	6,840	18	6,060	125.0	146.5	84.0
3 - 48	4,560-38,300	48	9,120	24	8,080	165.0	146.5	84.0
3 - 60	5,700-47,880	60	11,400	30	10,100	205.0	146.5	84.0
3 - 72	6,840-57,460	72	13,680	36	12,120	245.0	146.5	84.0
DFO 4 - 16	1,520-12,770	16	3,040	8	2,410	45.0	165.1	84.0
4 - 32	3,040-25,540	32	6,080	16	4,165	85.0	165.1	84.0
4 - 48	4,560-38,300	48	9,120	24	7,436	125.0	165.1	84.0
4 - 64	6,080-51,070	64	12,160	32	9,090	165.0	165.1	84.0
4 - 80	7,600-63,840	80	15,200	40	10,960	205.0	165.1	84.0
4 - 96	9,120-76,600	96	18,240	48	12,614	245.0	165.1	84.0
4 -112	10,640-89,380	112	21,280	56	14,455	285.0	165.1	84.0
4 -128	12,160-102,150	128	24,320	64	16,109	325.0	165.1	84.0

* The first number indicates number of filter rows, and the second number indicates number of cartridges.
** Based on clean filters.

Downflo® Oval

Proven Performance on Hundreds of Applications

DFO 4-112
on titanium grinding

DFO 4-48
on metal grinding

DFO 3-6
on sawing of high pressure hydaulic hose

DFO 2-4
on fiberglass routing & cutting

FILTRATION & SEPARATION
Product Achievement Awards
Product of the Year
2002
DFO

DFO 2-2
on paint pigment dust

Downflo® Oval

Standard Features & Equipment Options

DFO 1-1, 2-2, 3-3

	Standard	Optional
Collector Design		
Mild Steel Construction	✗	
Integral High Performance Power Packs	✗	
Ledge-Free Hopper	✗	
Inlet	✗	
Sprinkler Taps	✗	
ExtraLife™ Filter Cleaning System	✗	
Quick-Removal Access Covers	✗	
Integral Exhaust Silencer	✗	
Airflow Damper	✗	
Stainless Steel Construction		✗
Explosion Protected Models		✗
High Static Power Packs		✗
Inlet Damper		✗
Abrasion Resistant (AR) Inlet		✗
Sprinkler Heads		✗
Extraction Arms (7', 10', 14')		✗
Caster Packs		✗
Bag-Out Kit (Filter & Discharge)		✗
Bag-In/Bag-Out Kit (Filter & Discharge)		✗
Cartridge Filters		
Ultra-Web® (MERV 13)	✗	
Fibra-Web® (MERV 14); Ultra-Tek® (MERV 12); Thermo-Tek® (MERV 12); Torit-Tex™ (MERV 16)		✗
HEPA/ASHRAE Afterfilters		✗
Paint System		
Electrostatically applied powder coat TGIC polyester texture finish (2-mil dry film thickness) inside and out. Paint system passed 350-hr. salt spray test.	✗	
Custom Color		✗
Hostile Environment Coating		✗
Epoxy Coating		✗
Hopper Discharge		
10-Gallon Pail Pack	✗	
10-Gallon Pail Pack with Sealer Gear		✗
25-Gallon Dust Container		✗
Electrical Controls, Gauges, and Enclosures		
Minihelic®** Gauge	✗	
Manual or Automated Downtime Cleaning Controls	✗	
Solenoid Enclosure in NEMA 12	✗	
Continuous On-Demand Delta P Control		✗
Solenoid Enclosure NEMA 9		✗
Starter Controls		✗
Warranty		
10-Year Warranty	✗	

* The **Minimum Efficiency Reporting Value** (MERV) of this filter cartridge has been determined through independent laboratory testing using ASHRAE 52.2 (1999) test standards. The MERV rating was determined at a face velocity of 118 feet per minute and loading up to four inches water gauge. Actual efficiency of any filter cartridge will vary according to the specific application parameters. Dust concentration, airflow, particle characteristics, and pulse cleaning methods all affect filtration efficiency.

** Minihelic, Magnehelic and Photohelic are registered trademarks of Dwyer Instruments, Inc.

DFO 2-4 Thru 4-128

	Standard	Optional
Collector Design		
Mild Steel Construction	✗	
ExtraLife™ Filter Cleaning System	✗	
Quick-Removal Access Covers	✗	
Inlets	✗	
Ledge-Free Hopper	✗	
Sprinkler Taps	✗	
Stainless Steel Construction		✗
High Temperature Construction		✗
Explosion Protected Models		✗
Direct Drive Fans		✗
Chamber and Exhaust Silencers		✗
Abrasion Resistant (AR) Inlet		✗
Air Management Modules		✗
Extended Dirty Air Plenum		✗
Steep-Sided Hopper		✗
2-Mod Hopper		✗
Sprinkler Heads		✗
Service Platform (OSHA compliant)		✗
Damper Pack		✗
Drum Sentry™ Drum-Full Indicator		✗
Lined Clean Air Plenum		✗
Bag-Out Kit (Filter & Discharge)		✗
Bag-In/Bag-Out Kit (Filter & Discharge)		✗
Cartridge Filters		
Ultra-Web® (MERV 13)	✗	
Fibra-Web® (MERV 14); Ultra-Tek® (MERV 12); Thermo-Tek® (MERV 12); Torit-Tex™ (MERV 16)		✗
HEPA/ASHRAE Afterfilters		✗
Paint System		
Prime Coated Interior	✗	
Acrylic urethane finish over alkyd enamel primer. Paint system passes a 350-hr. salt spray test.	✗	
Custom Color		✗
Hostile Environment Coating		✗
Epoxy Coating		✗
Hopper Discharge		
Drum Cover and Hose		✗
Slide Gates		✗
Rotary Valves and Transitions		✗
Screw Conveyors		✗
Electrical Controls, Gauges, and Enclosures		
Control Box w/Timer in NEMA 4 Enclosure	✗	
Magnehelic®** Gauge	✗	
Delta P Control, Delta P Plus Control		✗
Dustronix™ Control Assembly		✗
Custom Panels		✗
Photohelic®* Gauge Standard and Weatherproof		✗
Basic Cold Climate Kit		✗
Heavy-Duty Cold Climate Kit		✗
Solenoid Enclosure (NEMA 7 & 9)		✗
Warranty		
10-Year Warranty	✗	

Information contained in this document is subject to change without notice.

Cleaner Air Worldwide

Better Technology

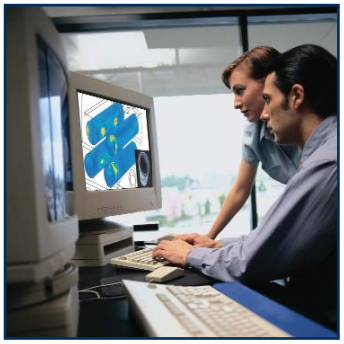

- 550 engineers worldwide
- More than 500 patents
- Broad range of innovative collectors and filters
- 100's of media formulations

Experience & Service

- Technical expertise and support
- Ready-to-ship filters and parts within 24 hours
- 1,000,000+ dust, fume, & mist collectors installed

Global Support

- Facilities in 35 countries
- 37 manufacturing plants and 11 distribution centers
- Sales offices worldwide

Donaldson®
Filtration Solutions

Donaldson Company, Inc.
Industrial Air Filtration
P.O. Box 1299
Minneapolis, MN
55440-1299 U.S.A.

Tel 800.365.1331
donaldsontorit@donaldson.com
www.donaldsontorit.com

Call Donaldson Torit to get Cleaner Air today 800-365-1331

ISO 9001:2000
FM 61768

Printed in USA

© Donaldson Company, 2002 Downflo Oval 06-2008

THIS DOCUMENT CONTAINS INFORMATION THAT IS CONFIDENTIAL AND/OR PROPRIETARY TO DONALDSON COMPANY, INC. ALL RIGHTS TO DISCLOSE, COPY, REPRODUCE, MANUFACTURE FROM OR DISPOSE OF THIS DOCUMENT OR ITS CONTENTS ARE RESERVED UNLESS SPECIFIED IN WRITING BY DONALDSON.

DWG NO.			
REV	ZONE	REVISION DESCRIPTION	APPROVAL/DATE
6		REVISED PICTORIALLY, REVISED MULTIPLE SPECS 2009A6128	JAS MAR 12, 2009

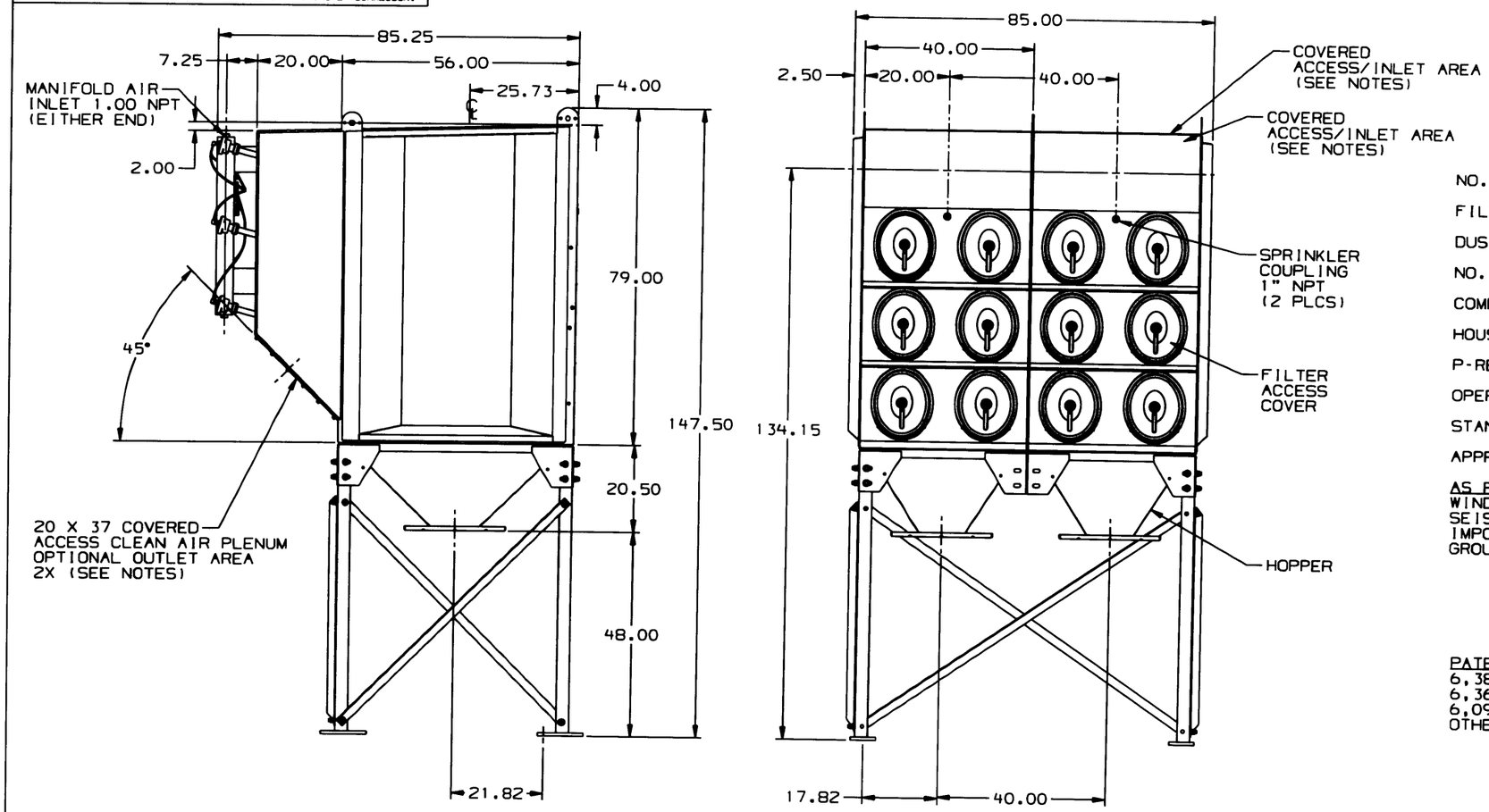

SPECIFICATIONS
MODEL DFO 3-24

NO. OF FILTERS	24
FILTER DIMENSIONS	11.4 x 14.4 OVAL X 26 LG.
DUST LOAD	40 LB PER CARTRIDGE DFO
NO. OF VALVES	12
COMPRESSED AIR REQUIRED	12 SCFM @ 90-100 PSIG
HOUSING RATING	-20" WG
P-RED	.40 BAR
OPERATING TEMP.	150°F MAX.
STANDARD FINISH	BLUE
APPROX WT	3285 LB.

AS PER IBC 2006 SPECIFICATIONS:
WIND: 90 MPH EXPOSURE C
SEISMIC SPECTRAL ACCELERATION, S_s=1.5 & S_1=0.6
IMPORTANCE FACTOR, I=1.0
GROUND SNOW LOAD, P_g=40 PSF

PATENT NUMBERS
6,387,162 6,488,746
6,364,921 6,368,388
6,090,173 5,562,746
OTHER PATENTS PENDING

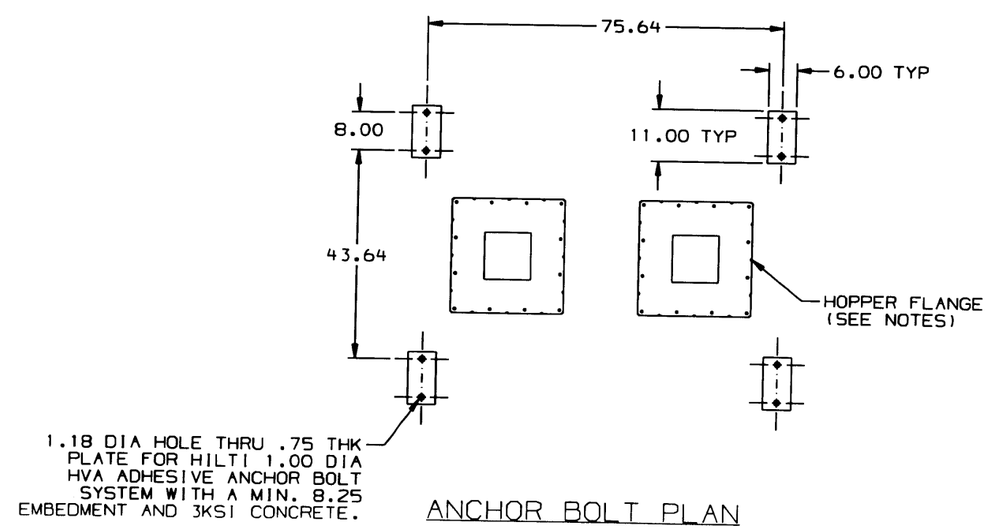

ANCHOR BOLT PLAN

NOTES:

1. SEE DFO 9337401 FOR INLET / OUTLET OPTIONS.
2. SEE DFO 9337301 FOR OPTIONS AND ACCESSORIES.
3. DO NOT INSTALL OR OPERATE THIS EQUIPMENT UNTIL HAVING READ AND UNDERSTOOD THE INSTRUCTIONS AND WARNINGS IN THE INSTALLATION AND OPERATION MANUAL. FOR A REPLACEMENT MANUAL CONTACT DONALDSON COMPANY, INC. (800) 365-1331.

THIS DOCUMENT IS NOT CERTIFIED FOR CONSTRUCTION PURPOSES AND IS SUBJECT TO CHANGE WITHOUT NOTICE.

TORIT DOWNFLO OVAL

MATERIAL	RELEASE NO. 2000A7012	TITLE DFO 3-24 DUST COLLECTOR WITH HOPPER AND LEGS	Donaldson Co. Inc. Minneapolis, MN USA
	DATE JUN 2000		
	EXP DATE		
	DWN G R NYGAARD	NUMBER DFO 9329804	
REFERENCE	DATE DEC 02, 1999		
	CHK R BICK		
	DATE DEC 1999	SCALE NONE / SHEET 1 OF 1	REVISION
PREVIOUS DRAWING NO.	APVD R BICK	C/C UG/CADD	6
DO NOT SCALE / TOLERANCES UNLESS OTHERWISE SPECIFIED 2 PL ± 3 PL ± ANGLES ± °	DATE DEC 1999	SECTIONAL SIZE / OUTLINE SIZE	IAF
	THIRD ANGLE PROJECTION	DESIGN CONTROL A004 / DWG LOCATION A101	VERSION A

COPYRIGHT © DONALDSON COMPANY, INC.

Part: 9329804_A_s_9329804_A_SECT_6 Date: 12-Mar-09 Time: 12:36

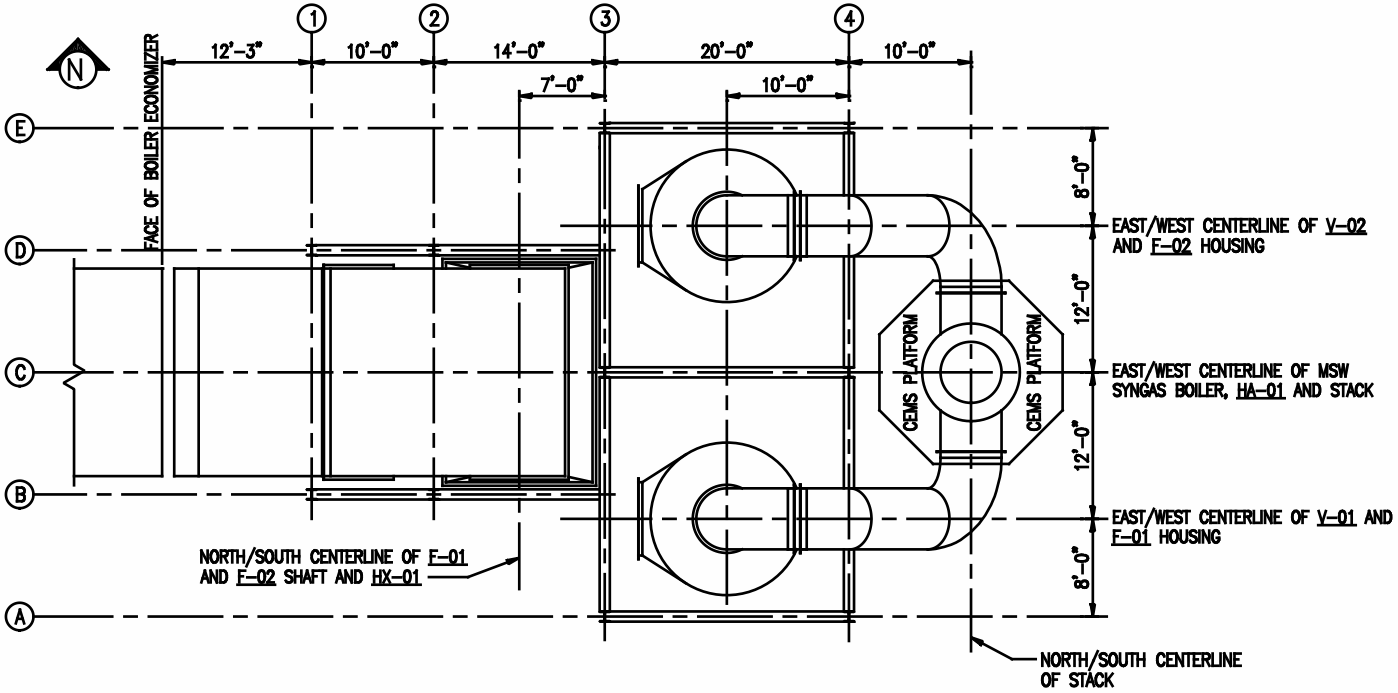
N
1
2
3
4
E
D
C
B
A
FACE OF BOILER ECONOMIZER
12'-3"
10'-0"
14'-0"
20'-0"
10'-0"
7'-0"
10'-0"
8'-0"
12'-0"
12'-0"
8'-0"
EAST/WEST CENTERLINE OF V-02 AND F-02 HOUSING
EAST/WEST CENTERLINE OF MSW SYNGAS BOILER, HA-01 AND STACK
EAST/WEST CENTERLINE OF V-01 AND F-01 HOUSING
CEMS PLATFORM
CEMS PLATFORM
NORTH/SOUTH CENTERLINE OF F-01 AND F-02 SHAFT AND HX-01
NORTH/SOUTH CENTERLINE OF STACK

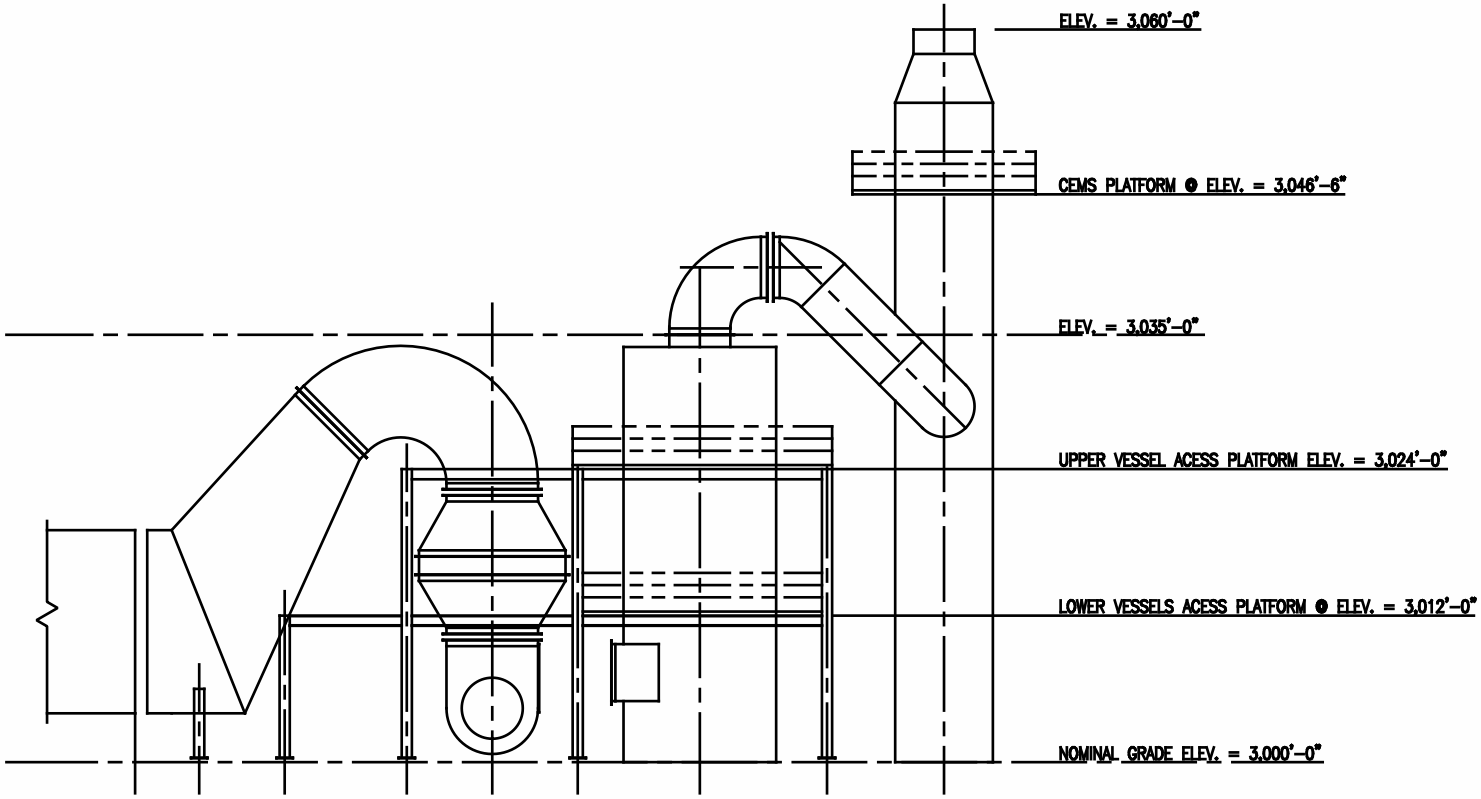
ELEV. = 3,060'-0"
CEMS PLATFORM @ ELEV. = 3,046'-6"
ELEV. = 3,035'-0"
UPPER VESSEL ACESS PLATFORM ELEV. = 3,024'-0"
LOWER VESSELS ACESS PLATFORM @ ELEV. = 3,012'-0"
NOMINAL GRADE ELEV. = 3,000'-0"

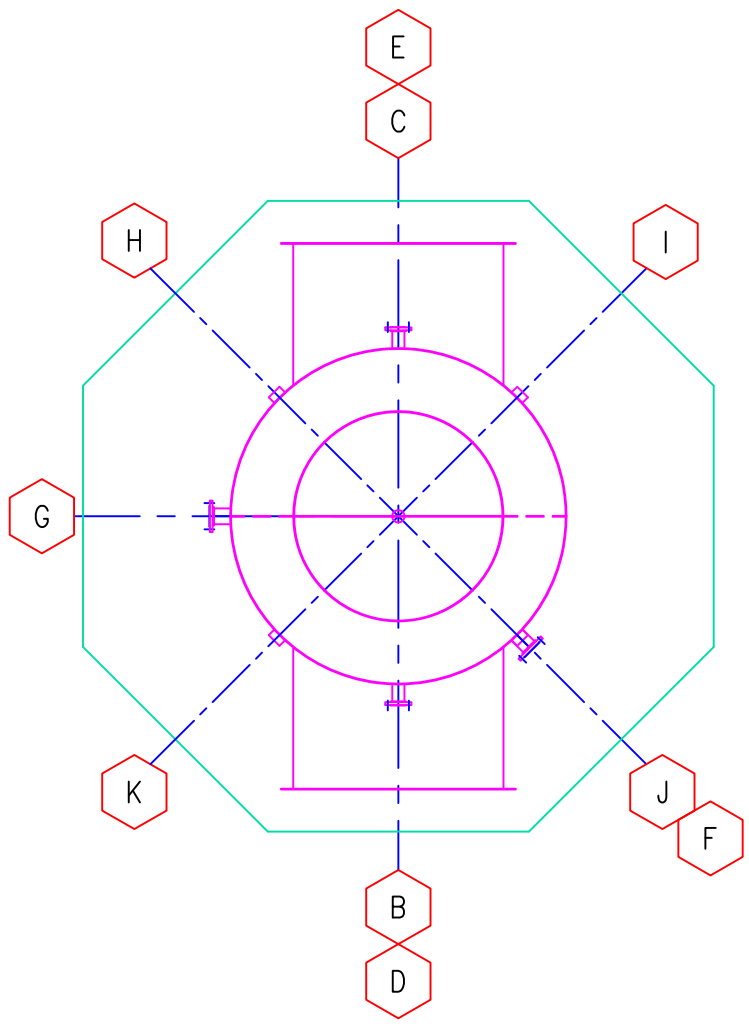
E
C
H
I
G
K
J
F
B
D

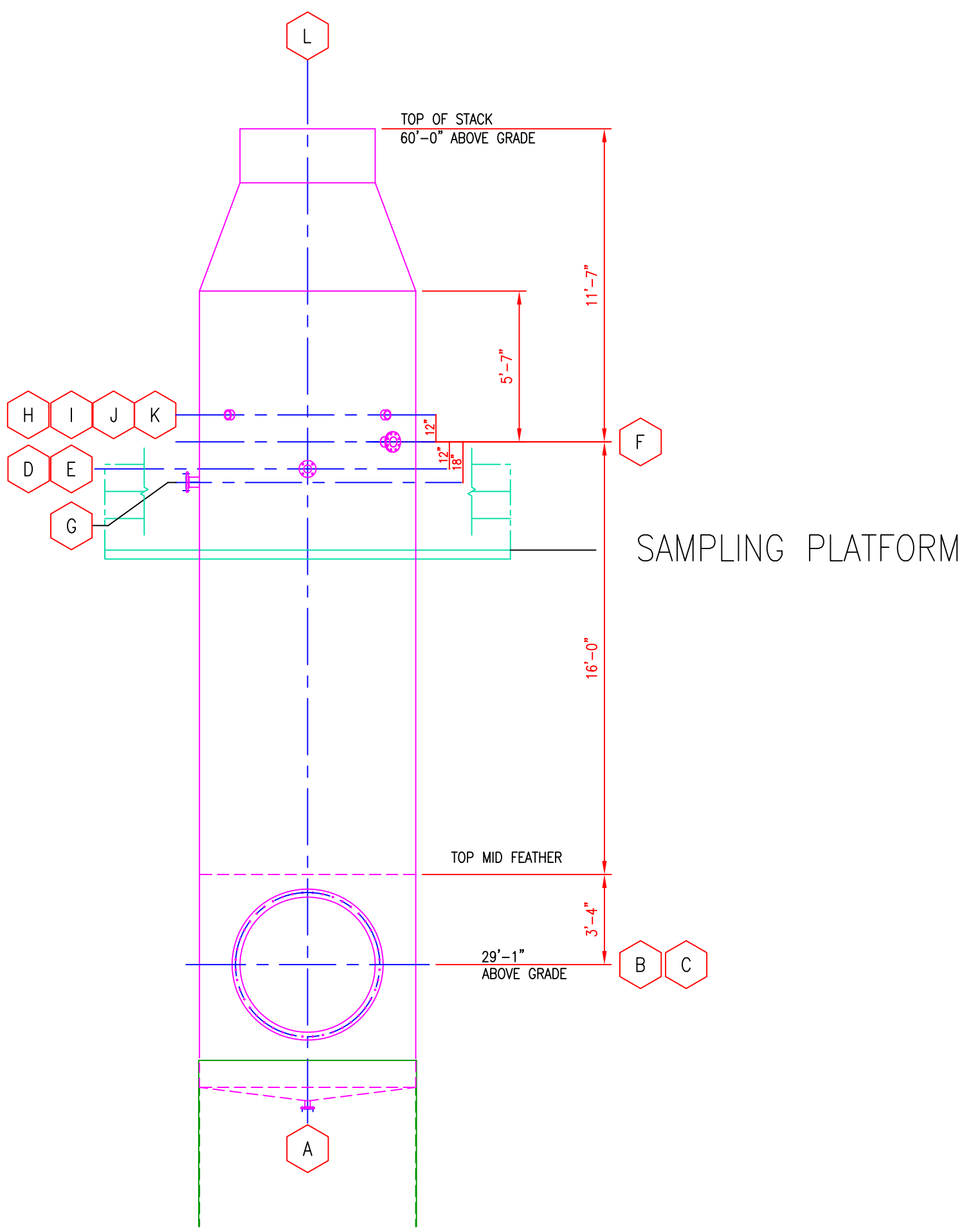
L
TOP OF STACK
60'-0" ABOVE GRADE
11'-7"
5'-7"
H
I
J
K
12"
12"
18"
F
D
E
G
SAMPLING PLATFORM
16'-0"
TOP MID FEATHER
3'-4"
29'-1"
ABOVE GRADE
B
C
A

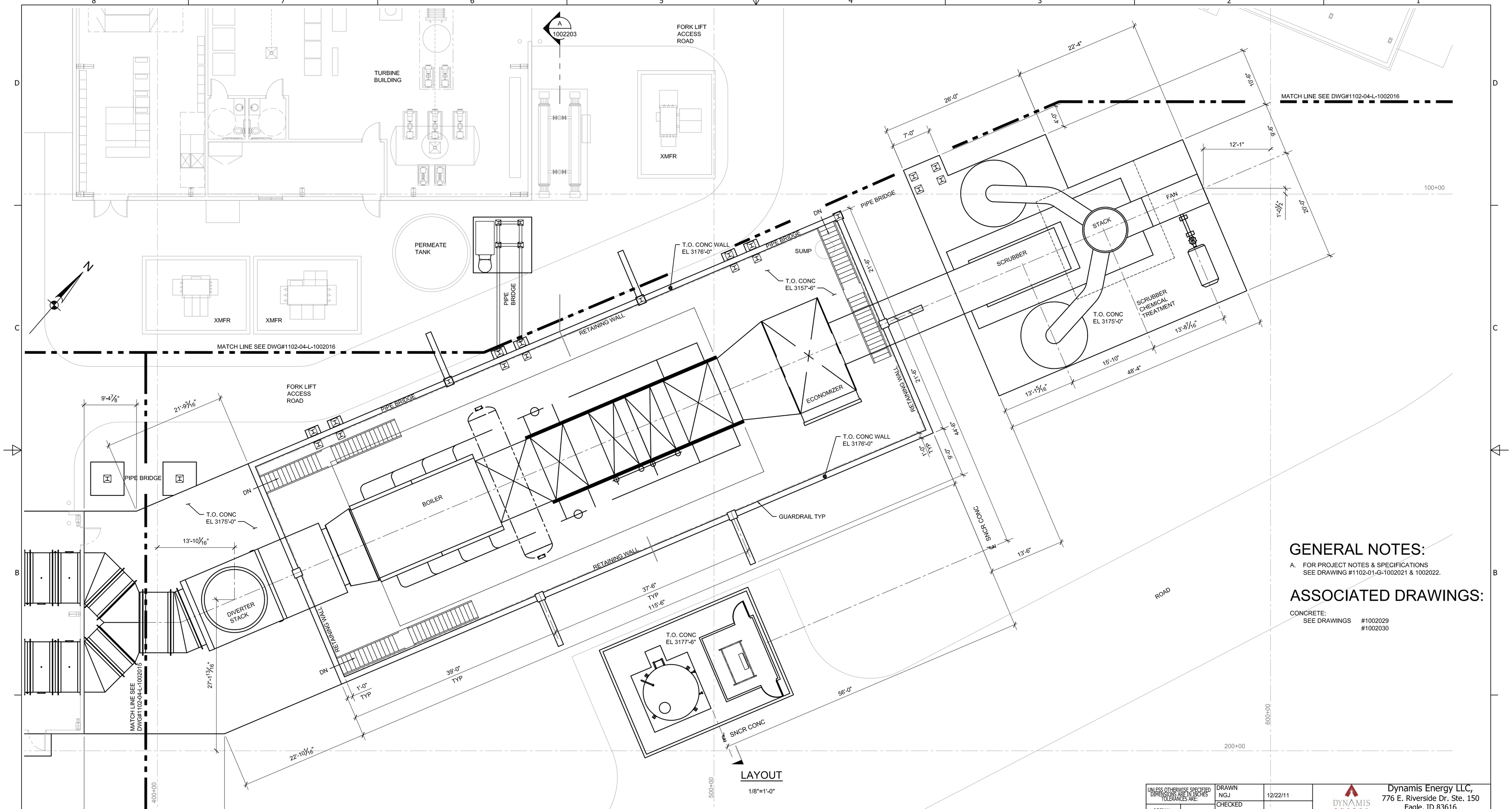

LAYOUT

1/8"=1'-0"

GENERAL NOTES:

A. FOR PROJECT NOTES & SPECIFICATIONS SEE DRAWING #1102-01-G-1002021 & 1002022.

ASSOCIATED DRAWINGS:

CONCRETE:
SEE DRAWINGS #1002029
#1002030

NO.	REVISIONS	BY	DATE
C	ISSUED FOR NOT TO EXCEED BUDGET	BEH	3/29/12
B	WAS DWG #1102-01-L-1002017	BEH	2/23/12
A	FOR REFERENCE ONLY	NGJ	12/29/11

ADA COUNTY, IDAHO

EVERGREEN ENGINEERING
Engineering and Construction Services
EUGENE, OREGON
(541) 484-4771 FAX: (541) 484-6759
www.evergreenengineering.com

EE JOB NUMBER 2540.1
CKD:
APP: JP
EE DRAWING NUMBER: 1102-04-L-1002017
CAD FILE: 1102-04-L-1002017.dwg

UNLESS OTHERWISE SPECIFIED DIMENSIONS ARE IN INCHES TOLERANCES ARE:

DECIMAL		WELD ± 1/32
X	±.1	CHAMFERS ±5°
XX	±.02	ANGLES ±1°
XXX	±.005	CAST ±1/8
FRACTIONS	±1/16	

THIRD ANGLE PROJECTION

DRAWN NGJ	12/22/11	
CHECKED		
QA		
MFG		
APPROVED JP		
MATERIAL SEE TABLE	FINISH N/A	

Dynamis Energy LLC,
776 E. Riverside Dr. Ste. 150
Eagle, ID 83616

TITLE
408T WASTE TO ENERGY FACILITY
BOILER/ BAGHOUSE/ FAN/ STACK
LAYOUT

SIZE	DWG NO	REV
D	1102-04-L-1002017	C

SCALE: 1/8"=1'-0" SHEET 1 OF 1

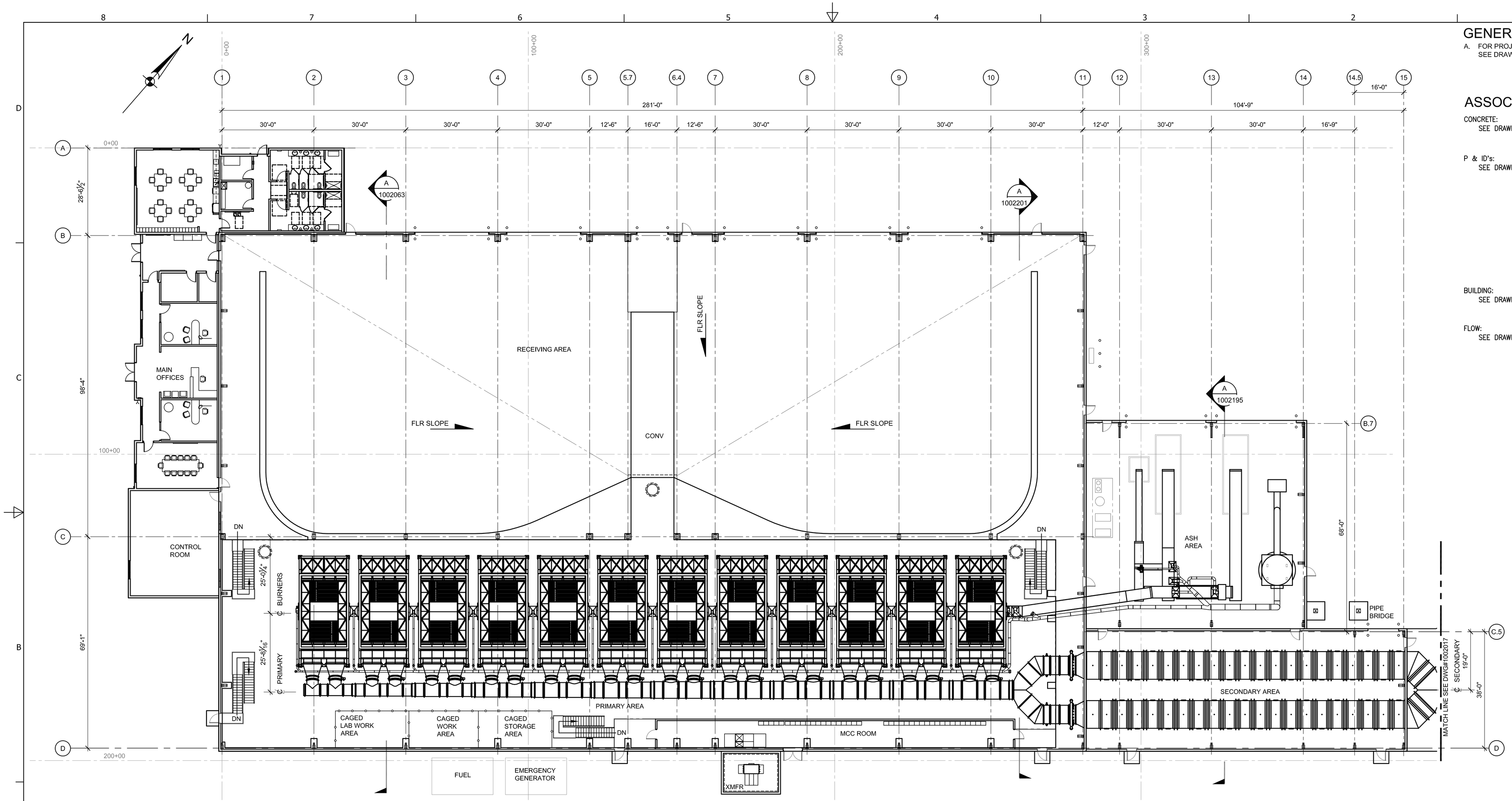

LAYOUT

1/16"=1'-0"

GENERAL NOTES:

A. FOR PROJECT NOTES & SPECIFICATIONS SEE DRAWING #1102-01-G-1002021 & 1002022.

ASSOCIATED DRAWINGS:

CONCRETE:
SEE DRAWINGS #1002024
#1002025

P & ID's:
SEE DRAWINGS #1002001
#1002002
#1002003
#1002004
#1002005
#1002006
#1002007
#1002008
#1002010
#1002011
#1002012
#1002013

BUILDING:
SEE DRAWINGS #1002063
#1002195
#1002205

FLOW:
SEE DRAWINGS #1002000

NO.	REVISIONS	BY	DATE
C	ISSUED FOR NOT TO EXCEED BUDGET	BEH	3/29/12
B	WAS DWG #1102-01-L-1002015	BEH	2/23/12
A	FOR REFERENCE ONLY	NGJ	12/29/11

ADA COUNTY, IDAHO

EVERGREEN ENGINEERING
Engineering and Construction Services
EUGENE, OREGON
(541) 484-4771 FAX: (541) 484-6759
www.evergreenengineering.com

EE JOB NUMBER 2540.1
CKD:
APP: JP
EE DRAWING NUMBER: 1102-09-L-1002015
CAD FILE: 1102-09-L-1002015.dwg

UNLESS OTHERWISE SPECIFIED DIMENSIONS ARE IN INCHES TOLERANCES ARE:
DECIMAL X ±.1 XX ±.02 XXX ±.005
WELD ± 1/32
CHAMFERS ±5°
ANGLES ±1°
CAST ±1/8
FRACTIONS ±1/16
THIRD ANGLE PROJECTION

DRAWN NGJ 12/20/11
CHECKED
QA
MFG
APPROVED JP
MATERIAL SEE TABLE
FINISH N/A

Dynamis Energy LLC,
776 E. Riverside Dr. Ste. 150
Eagle, ID 83616

TITLE
408T WASTE TO ENERGY FACILITY
MAIN BUILDING LAYOUT

SIZE D
DWG NO 1102-09-L-1002015
REV C
SCALE: 1/16"=1'-0"
SHEET 1 OF 1

APPENDIX F

Emissions Inventory

Dynamis Energy, LLC
Pilot WTE Facility

FACILITY POTENTIAL TO EMIT - CRITERIA POLLUTANTS

	Criteria Pollutants											
	NOx Emissions		CO Emissions		PM-10/PM-2.5 Emissions		SOx Emissions		VOC Emissions		Lead Emissions	
Description	**lb/hr**	**T/yr**	**lb/hr**	**T/yr**	**lb/hr**	**T/yr**	**lb/hr**	**T/yr**	**lb/hr**	**T/yr**	**lb/hr**	**T/yr**
Thermal Conversion Unit - Peak	29.93	87.38	10.90	31.83	3.66	10.68	8.54	24.94			0.03	0.09
Thermal Conversion Unit - OffPeak	4.41	6.44	1.61	0.54	0.54	0.79	1.26	1.84			0.00	0.01
Cooling Tower					0.02	0.08						
Ash System					0.45	1.97					5.10E-04	2.23E-03
Emergency Generator	1.30	0.33	0.26	0.07	0.03	0.01	0.98	0.25	1.19	0.30		
Ignition Systems	0.47	2.04	0.39	1.72	0.02	0.09	0.00	0.00	0.03	0.11	2.33E-06	1.02E-05
Total	**36.104**	**96.188**	**13.164**	**34.149**	**4.720**	**13.616**	**10.786**	**27.030**	**1.211**	**0.409**	**0.0358**	**0.099**

FACILITY POTENTIAL TO EMIT - TAPS (using Peak + Offpeak Emissions)

NON-CARCINOGENS (POUNDS PER HOUR)				
Pollutant	**CAS #**	**TAP Emissions (lb/hr)**	**Screening Level (lb/hr)**	**Modeling? (Y/N)**
Acrolein	107-02-8	1.13E-04	0.017	No
Aluminum	7429-90-5	1.08E-01	6.67E-01	No
Antimony	7440-36-0	1.13E-03	3.3E-02	No
Barium	7440-39-3	8.88E-04	3.3E-02	No
Chromium	7440-47-3	2.62E-03	3.3E-02	No
Cobalt	7440-48-4	1.84E-03	3.3E-03	No
Copper	7440-50-8	1.44E-03	6.7E-02	No
Ethylbenzene	100-41-4	0.00E+00	2.9E+01	No
Fluoride (as F) (Hydrogen Fl)	16984-48-8	8.83E+00	1.67E-01	Yes
Fluorene	7782-41-4	0.00E+00	1.67E-01	No
Hexane	110-54-3	8.40E-03	1.2E+01	No
Hydrogen Chloride	7647-01-0	1.19E+00	5.0E-02	Yes
Manganese	7439-96-5	9.60E-03	3.33E-01	No
Mercury	7439-97-6	3.56E-03	3.E-03	Yes
Molybdenum	7439-98-7	3.21E-03	3.33E-01	No
Naphthalene*	91-20-3	3.04E-06	9.10E-05	No
Pentane	109-66-0	1.21E-02	1.18E+02	No
Phosphorous	7723-14-0	2.66E-03	7.E-03	No
Selenium	7782-49-2	3.18E-03	1.3E-02	No
Silver	7440-22-4	2.92E-07	7.0E-03	No
Toluene	108-88-3	5.15E-04	2.5E+01	No
o-Xylene	1330-20-7	3.48E-04	2.9E+01	No
Zinc	7440-66-6	3.91E-01	6.67E-01	No

*Although listed as a noncarcinogen in the Rules, DEQ has determined that naphthalene is a possible/probable carcinogen. Compliance for naphthalene emissions should be based on the EL or AACC listed in Section 586 for PAH.

CARCINOGENS (POUNDS PER HOUR)				
Pollutant	**CAS #**	**TAP Emissions (lb/hr)**	**Screening Level (lb/hr)**	**Modeling? (Y/N)**
Acetaldehyde	75-07-0	9.37E-04	3.00E-03	No
Arsenic	7440-38-2	9.33E-07	1.50E-06	No
Benzene	71-43-2	1.15E-03	8.0E-04	Yes
Beryllium	7440-41-7	5.60E-08	2.8E-05	No
Cadmium	7440-43-9	4.98E-03	3.7E-06	Yes
Chromium VI	7440-47-3	0.00E+00	5.6E-07	No
Dioxin/Furan	1746-01-6	1.21E-06	1.50E-10	Yes
Formaldehyde	50-00-0	1.79E-03	5.1E-04	Yes
Nickel	7440-02-0	2.17E-02	2.7E-05	Yes
Benzo(a)pyrene	50-32-8	5.60E-09	2.0E-06	No
Benz(a)anthracene	56-55-3	8.40E-09	2.0E-06	No
Benzo(b)fluoranthene	205-82-3	8.40E-09	2.0E-06	No
Benzo(k)fluoranthene	205-99-2	8.40E-09	2.0E-06	No
Chrysene	218-01-9	8.40E-09	2.0E-06	No
Dibenzo(a,h)anthracene	53-70-3	5.60E-09	2.0E-06	No
Indeno(1,2,3-cd)pyrene	193-39-5	8.40E-09	2.0E-06	No
Total PAHs		2.45E-07	9.10E-05	No

Dynamis Energy WTE Facility
Thermal Conversion System
Thermal Conversion Unit

Total MSW Throughput =	367.2	tpd
Total MSW Throughput =	15.30	ton/hr
Total MSW Throughput =	30600	lb/hr
Peak Operating Hours =	5840	hr/yr
Off-Peak Operating Hours =	2920	hr/yr
Peak Exhaust Flow =	160,820	acfm @ 142F
Off-Peak Exhaust Flow =	37,000	acfm @ 146F

Hours	7am - 11pm	11pm-7am
Throughput (tpd)	342	25.2
Throughput (tph)	21.375	3.15

Pollutant Emission Factors	PM/PM10/ PM2.5 lb/ton	SO2 lb/ton	NOx lb/ton	CO lb/ton	Lead lb/ton
Thermal Conversion Unit Exhaust	0.29	1.39	1.4	0.51	1.44E-03

PM, NOx, CO, SO2, Lead Emission factor from source test averages
*SO2 Emission rate based on scrubber manufacturer guarantee of 71.25% control. PM2.5 emission rate based on scrubber manufacturere guarantee of 41%.

7am-11pm - PEAK

Pollutant	PM/PM10/PM2.5		SO_2		NOx		CO		Lead	
	lb/hr	tpy	lb/hr	tpy	lb/hr	tpy	lb/hr	tpy	lb/hr	tpy
Thermal Conversion Unit Exhaust Uncontrolled	6.20	18.10	29.71	86.76	29.93	87.38	10.90	31.83	0.03	0.09
Thermal Conversion Unit Exhaust Controlled	3.66	10.68	8.54	24.94	29.93	87.38	10.90	31.83	0.03	0.09
Controlled Boiler Stack Emissions (Thermal Unit + Ignition System)	3.68	10.74	8.54	24.94	30.39	88.74	11.29	32.98	0.03	0.09

11pm-7am - OFF PEAK

Pollutant	PM/PM10/PM2.5		SO_2		NOx		CO		Lead	
	lb/hr	tpy	lb/hr	tpy	lb/hr	tpy	lb/hr	tpy	lb/hr	tpy
Thermal Conversion Unit Exhaust Uncontrolled	0.91	1.33	4.38	6.39	4.41	6.44	1.61	0.54	0.00	0.01
Thermal Conversion Unit Exhaust Controlled	0.54	0.79	1.26	1.84	4.41	6.44	1.61	0.54	0.00	0.01
Controlled Boiler Stack Emissions (Thermal Unit + Ignition System)	0.56	0.82	1.26	1.84	4.88	7.12	2.00	1.11	0.00	0.01

TOXIC AIR POLLUTANTS (TAPs) CALCULATIONS

NON-CARCINOGENS (POUNDS PER HOUR)

Pollutant	CAS #	TAP Emission Factor (lb/ton)	Peak TAP Emissions (lb/hr)	Off-Peak TAP Emissions (lb/hr)	Total Peak/Off-Peak Emissions (lb/hr)	"24-hr"TAP Emissions (lb/hr)	Screening Level (lb/hr)	Modeling (based on peak + offpeak)? (Y/N)	Modeling (based on 24hr)? (Y/N)	Stack Emissions (Thermal Unit + Ignition System) PEAK lb/hr	PEAK tpy	OFF PEAK lb/hr	OFF PEAK tpy
Aluminium	7429-90-5	4.74E-04	1.01E-02	1.49E-03	1.16E-02	7.25E-03	6.67E-01	No	No				
Antimony	7440-36-0	4.60E-05	9.83E-04	1.45E-04	1.13E-03	7.03E-04	3.3E-02	No	No				
Barium	7440-39-3	1.23E-05	2.63E-04	3.88E-05	3.02E-04	1.88E-04	3.3E-02	No	No				
Chromium	7440-47-3	1.03E-04	2.20E-03	3.25E-04	2.53E-03	1.58E-03	3.3E-02	No	No				
Copper	7440-50-8	4.33E-05	9.26E-04	1.37E-04	1.06E-03	6.63E-04	6.7E-02	No	No				
Cobalt	7440-48-4	1.77E-05	3.79E-04	5.58E-05	4.35E-04	2.71E-04	3.3E-03	No	No				
Hydrogen Chloride	7647-01-0	See Note Below	5.95E-01	5.95E-01	1.19E+00	5.95E-01	5.0E-02	Yes	Yes	5.95E-01	1.74E+00	5.95E-01	8.69E-01
Hydrogen Flouride	NA	3.60E-01	7.70E+00	1.13E+00	8.83E+00	5.51E+00	1.7E-01	Yes	Yes	7.70E+00	2.25E+01	1.13E+00	1.66E+00
Manganese	7439-96-5	3.56E-04	7.60E-03	1.12E-03	8.72E-03	5.44E-03	3.33E-01	No	No				
Mercury	7439-97-6	1.45E-04	3.10E-03	4.57E-04	3.56E-03	2.22E-03	3.0.E-03	Yes	No				
Molybdenum	7439-98-7	1.30E-04	2.77E-03	4.09E-04	3.18E-03	1.98E-03	3.3.E-01	No	No				
Selenium	7782-49-2	1.30E-04	2.77E-03	4.09E-04	3.18E-03	1.98E-03	1.3E-02	No	No				
Zinc	7440-66-6	6.68E-03	1.43E-01	2.10E-02	1.64E-01	1.02E-01	6.67E-01	No	No				

*HCl emission rate of 0.595 lb/hr based on baghouse manufacturer guarantee
HF emission rate from spreadsheet developed by R. Kolb, Dynamis

CARCINOGENS (POUNDS PER HOUR)

Pollutant	CAS #	TAP Emission Factor (lb/ton)	Peak TAP Emissions (lb/hr)	Off-Peak TAP Emissions (lb/hr)	Total Peak/Off-Peak Emissions (lb/hr)	"24-hr"TAP Emissions (lb/hr)	Screening Level (lb/hr)	Modeling (based on peak + offpeak)? (Y/N)	Modeling (based on 24hr)? (Y/N)	PEAK lb/hr	PEAK tpy	OFF PEAK lb/hr	OFF PEAK tpy
Arsenic		0.00E+00	0.00E+00	0.00E+00	0.00E+00	0.00E+00	1.50E-06	No	No				
Cadmium	7440-43-9	2.02E-04	4.33E-03	6.37E-04	4.96E-03	3.10E-03	3.7E-06	Yes	Yes	4.33E-03	1.26E-02	6.37E-04	9.31E-04
Dioxin/Furan		4.95E-08	1.06E-06	1.56E-07	1.21E-06	7.57E-07	1.50E-10	Yes	Yes	1.06E-06	3.09E-06	1.56E-07	2.28E-07
Nickel	7440-02-0	8.81E-04	1.88E-02	2.78E-03	2.16E-02	1.35E-02	2.7E-05	Yes	Yes	1.92E-02	5.60E-02	3.13E-03	4.56E-03

TAPs Emission factor from source test averages

Dynamis Energy WTE Facility
Thermal Conversion System - Hidden Hollow Landfill
Thermal Conversion Units - Ignition Systems HAPs

TOXIC AIR POLLUTANTS (TAPs) COMBUSTION CALCULATIONS
NATURAL GAS

Emission Unit	Fuel Usage
Primary Chamber Ignition	4,664.71 scf/hr

NON-CARCINOGENS (POUNDS PER HOUR)

Pollutant	CAS #	EF for NG Combustion (lb/10^6 scf)[a]	TAP Emissions (lb/hr)	Screening Level (lb/hr)	Modeling? (Y/N)
Antimony	7440-36-0	0.0E+00	0.00E+00	3.3E-02	No
Barium	7440-39-3	4.4E-03	2.05E-05	3.3E-02	No
Chromium	7440-47-3	1.4E-03	6.53E-06	3.3E-02	No
Cobalt	7440-48-4	8.4E-05	3.92E-07	3.3E-03	No
Copper	7440-50-8	8.5E-04	3.97E-06	6.7E-02	No
Ethylbenzene	100-41-4	0.0E+00	0.00E+00	2.9E+01	No
Fluoride (as F)	16984-48-8	0.0E+00	0.00E+00	1.67E-01	No
Hexane	110-54-3	1.8E+00	8.40E-03	1.2E+01	No
Manganese	7439-96-5	3.8E-04	1.77E-06	3.33E-01	No
Mercury	7439-97-6	2.6E-04	1.21E-06	3.E-03	No
Molybdenum	7439-98-7	1.1E-03	5.13E-06	3.33E-01	No
Naphthalene	91-20-3	6.1E-04	2.85E-06	3.33E+00	No
Pentane	109-66-0	2.6E+00	1.21E-02	1.18E+02	No
Phosphorous	7723-14-0	0.0E+00	0.00E+00	7.E-03	No
Selenium	7782-49-2	2.4E-05	1.12E-07	1.3E-02	No
1,1,1-Trichloroethane	71-55-6	0.0E+00	0.00E+00	1.27E+02	No
Toluene	108-88-3	3.4E-03	1.59E-05	2.5E+01	No
o-Xylene	1330-20-7	0.0E+00	0.00E+00	2.9E+01	No
Zinc	7440-66-6	2.9E-02	1.35E-04	6.67E-01	No

CARCINOGENS (POUNDS PER HOUR)

Pollutant	CAS #	EF for Natural Gas Combustion (lb/10^6 scf)[a]	TAP Emissions (lb/hr)	Screening Level (lb/hr)	Modeling? (Y/N)	Peak (tpy)	Off peak (tpy)
Arsenic	7440-38-2	2.0E-04	9.33E-07	1.5E-06	No		
Benzene	71-43-2	2.1E-03	9.80E-06	8.0E-04	No	2.86E-05	1.43E-05
Beryllium	7440-41-7	1.2E-05	5.60E-08	2.8E-05	No		
Cadmium	7440-43-9	1.1E-03	5.13E-06	3.7E-06	Yes		
Chromium VI	7440-47-3	0.0E+00	0.00E+00	5.6E-07	No		
Formaldehyde	50-00-0	7.5E-02	3.50E-04	5.1E-04	No	1.02E-03	5.11E-04
Nickel	7440-02-0	2.1E-03	9.8E-06	2.7E-05	No	2.86E-05	1.43E-05
Benzo(a)pyrene	50-32-8	1.2E-06	5.60E-09	2.0E-06	No		
Benz(a)anthracene	56-55-3	1.8E-06	8.40E-09	NA	No		
Benzo(b)fluoranthene	205-82-3	1.8E-06	8.40E-09	NA	No		
Benzo(k)fluoranthene	205-99-2	1.8E-06	8.40E-09	NA	No		
Chrysene	218-01-9	1.8E-06	8.40E-09	NA	No		
Dibenzo(a,h)anthracene	53-70-3	1.2E-06	5.60E-09	NA	No		
Indeno(1,2,3-cd)pyrene	193-39-5	1.8E-06	8.4E-09	NA	No		
Total PAHs		1.1E-05	5.32E-08	2.00E-06	No		

[a]EFs from AP-42, Tables 1.4-3 and 1.4-4, 7/98
[b]EFs from AP-42, Table 1.3-10, 9/98

Dynamis Energy WTE Facility
Thermal Conversion System - Hidden Hollow Landfill
Thermal Conversion Units - Ignition Systems Criteria Pollutants

Primary gasification ignition systems will operate on natural gas. Primary chamber ignition will be evenly distributed throughout the day; independent of MSW throughput and peak/off-peak operation.

CRITERIA POLLUTANT COMBUSTION CALCULATIONS
NATURAL GAS

Emission Unit	Fuel Usage		Conversions	
Primary Chamber Ignition (total)	111,953 scf/day		40862845	1020 MMBtu/10^6 scf
Primary Chamber Ignition (total)	4.76 MMBtu/hr			

Emission Factors

NOx	100 lb/10^6 scf	AP-42, Table 1.4-1, 1998
CO	84 lb/10^6 scf	AP-42, Table 1.4-1, 1998
PM-10	7.6 lb/10^6 scf	AP-42, Table 1.4-2, 1998
SOx	0.6 lb/10^6 scf	AP-42, Table 1.4-2, 1998
VOC	5.5 lb/10^6 scf	AP-42, Table 1.4-2, 1998
Lead	0.0005 lb/10^6 scf	AP-42, Table 1.4-2, 1998

Description	Capacity (MMBtu/hr)	Throughput (scf/hr)	Pounds per Hour					
			NOx Emissions (lb/hr)	CO Emissions (lb/hr)	PM-10/PM-2.5 Emissions (lb/hr)	SOx Emissions (lb/hr)	VOC Emissions (lb/hr)	Lead Emissions (lb/hr)
Primary Chamber Ignitions - Uncontrolled	4.76	4,665	0.4665	0.3918	0.0355	0.0028	0.0257	0.0000023
Primary Chamber Ignitions - Controlled	4.76	4,665	0.4665	0.3918	0.0209	0.0008	0.0257	0.0000023

*SO2 Emission rate based on scrubber manufacturer guarantee of 71.25% control. PM2.5 emission rate based on scrubber manufacturere guarantee of 41%.

Description	Capacity (MMBtu/hr)	Throughput (scf/yr)	Ton per Year					
			Emissions (T/yr)	Emissions (T/yr)	Emissions (T/yr)	Emissions (T/yr)	Emissions (T/yr)	Emissions (T/yr)
Primary Chamber Ignitions - Uncontrolled	4.76	4,665	2.04	1.72	0.16	0.01	0.11	1.02E-05
Primary Chamber Ignitions - Controlled (Peak)	4.76	4,665	1.36	1.14	0.06	0.00	0.07	0.00
Primary Chamber Ignitions - Controlled (Off-Peak)	4.76	4,665	0.68	0.57	0.03	0.00	0.04	0.00

GHG EMISSIONS

For MSW Combustion Calculation Method- Tier 2

CH4 or N2O = $1x10^3$ * Steam * B * EF (Equation C-9b)

For primary ignition system NG Combustion Calculation Method - Tier 1

CO_2 = $1x10^3$ * Fuel * HHV * EF

CH4 or N2O = $1x10^3$ * Fuel * HHV * EF

NG Emission Factors

CO_2	53.02	kg/MMBtu	40 CFR 98 Table C-1
CH_4	0.001	kg/MMBtu	40 CFR 98 Table C-2
N_2O	0.0001	kg/MMBtu	40 CFR 98 Table C-2

MSW Emission Factors

CO_2	1.33E+03	lb/ton	Source Test Average
CH_4	3.20E-02	kg/MMBtu	40 CFR 98 Table C-2
N_2O	4.20E-03	kg/MMBtu	40 CFR 98 Table C-2

High Heating Value

NG HHV	1.028E-03	MMBtu/scf	40 CFR 98 Table C-1

Combustion Source	Capacity (MMBtu/hr)	Fuel	Steam Generated (lb steam)	B Ratio (MMBtu/lb steam)	Throughput (scf/yr)	CO_2 (tonne/yr)	CO_2 (ton/yr)	CH_4 (tonne/yr)	CH_4 (ton/yr)	N_2O (tonne/yr)	N_2O (ton/yr)	CO_2e (tonne/yr)	CO_2e (ton/yr)
Thermal Conversion Unit - MSW	320	MSW	1.416E+09	0.001979381	---	80,840	89,129	89.70	98.90	11.77	12.98	86,373.2	95,229.5
Primary ignition system	4.76	NG	---	---	40,862,845.0	2,227	2,456	0.04	0.04	0.004	0.005	2,229.4	2,458.0
					Total	83,067	91,584	90	99	12	13	88,603	97,688

Dynamis Energy WTE Facility
Thermal Conversion System - Hidden Hollow Landfill
Emergency Generator

Caterpillar 300 kW Standby C9 Tier 3 Certified Generator

Combustion Source	kW	hp	Hours of Operation	Emission Factors (g/hp-hr)					
				PM[1]	NOx[1]	SO_2[2]	CO[1]	VOC[3]	HC[1]
300 kW Gen	300	480.00	500	0.033	4.110	0.0021	0.250	0.0025	0.06

1. Manufacturer specific emisions factors. Generator is EPA Certified Tier 3. Horsepower shown in manufacturer specified max horsepower.
2. Emission Factor Reference for SO2: AP-42, 5 th Edition, Table 3.3-1, 0.5% sulfur fuel, units are lb/hp-hr
3. Emission Factor Reference for VOC: AP-42, 5 th Edition, Table 3.3-1, units are lb/hp-hr

Combustion Source	kW	hp	Hours of Operation	Emission Rates											
				PM/ PM_{10}/ $PM_{2.5}$		NOx		SO_2		CO		VOC		HC	
				lb/hr	tpy	lb/hr	tpy	lb/hr	tpy	lb/hr	tpy	lb/hr	tpy	lb/hr	tpy
300 kW Gen	300	480.00	500	0.035	0.01	1.302	0.33	0.984	0.25	0.264	0.07	1.186	0.30	0.06336	0.01584
			Total	***0.035***	***0.009***	***1.302***	***0.326***	***0.984***	***0.246***	***0.264***	***0.066***	***1.186***	***0.296***	***0.063***	***0.016***

HAPS

Combustion Source	kW	hp	Hours of Operation	Emission Factors (lb/MMBtu)							
				Benzene	CH2O	Toluene	Xylenes	Propylene	Acetald.	Acrolein	Total PAH
300 kW Gen	300	480.00	500	9.330E-04	1.18E-03	4.090E-04	2.850E-04	2.580E-03	7.670E-04	9.250E-05	1.68E-04

Emission Factor Reference AP-42, 5th Edition Table 3.3-2
CH2O = Formaldehyde

Combustion Source	kW	hp	MMBtu/hr	Hours of Operation	Emission Rates															
					Benzene		CH2O		Toluene		Xylenes		Propylene		Acetaldehyde		Acrolein		Total PAH	
					lb/hr	tpy	lb/hr	tpy	lb/hr	tpy	lb/hr	tpy	lb/hr	tpy	lb/hr	tpy	lb/hr	tpy	lb/hr	tpy
300 kW Gen	300	480.00	1.22	500	0.001	0.000	0.001	0.000	0.000	0.000	0.000	0.000	0.003	0.001	0.001	0.0002	0.000	0.0000	0.000	0.0000
			Total	***500***	***0.001***	***2.85E-04***	***0.001***	***3.60E-04***	***0.000***	***0.000***	***0.000***	***0.000***	***0.003***	***0.001***	***0.001***	***0.000***	***0.000***	***0.000***	***0.000***	***0.000***

Dynamis Energy WTE Facility
Thermal Conversion System - Hidden Hollow Landfill
Cooling Towers

Induced Draft Cooling Towers

Total Make-up to Unit:	470 gpm	
Evaporation Loss:	372 gpm	Cooling towers will operate at the same rates for both peak and off-peak thermal unit/boiler operation
Drift Loss:	0.26 gpm	
Blowdown:	92 gpm	

Cooling Tower Emissions

	Total Liquid Drift Factor (lb/1000 gal)[b]	TDS Content Fraction	Emission Factor (lb/1000 gal)	Evaporation Rate (gal/hr)	PM/PM-10[a] Emission Rate lb/hr (lb/hr)	PM/PM-10[a] Emission Rate tpy[b] (tpy)
Cooling Tower	1.7	0.000470	0.000799	22,320	0.02	0.08
Total					**0.02**	**0.08**

[a]PM-10 emission factor assumed to be equal to PM emission factor. Assume PM2.5 = PM10.
[b]AP-42 Table 13.4-1 Total liquid drift for induced draft tower
TDS content in water from water analysis of makeup water.

Dynamis Energy WTE Facility
Thermal Conversion System - Hidden Hollow Landfill
Ash Handling System

Total Ash Throughput =	10% of total waste throughput
Total Ash Throughput =	40.8 tpd
Total Ash Throughput =	3400 lb/hr
Baghouse Flow Rate =	14,000 cfm

Baghouse Control System
Manufacturer guarantee of PM2.5 Emissions = 0.005 grain/cf

Assume 5% of ash becomes airborne particulate (rest is glass, metal pieces, or large non airborne ash particles collected for use). Assume PM2.5=PM10=0.75PM

Ash System Emissions	PM10/PM2.5	
	lb/hr	tpy
Uncontrolled	127.50	558.45
Controlled	0.45	1.97

			Emissions		
TCLP Results	**(mg/kg)**	**%**	**(lb/ton)**	**lb/hr**	**tpy**
Ag	0.18666667	0%	0.000	2.92095E-07	1.27938E-06
Al	61625	21%	123.507	0.096430551	0.422365815
As	NA	NA	NA	NA	NA
B	305.25	0%	0.612	0.000477654	0.002092124
Ba	361.237778	0%	0.724	0.000565263	0.002475854
Be	NA	NA	NA	NA	NA
Bi	NA	NA	NA	NA	NA
Ca	49712.5	17%	99.632	0.077789919	0.340719847
Cd	9.27944444	0%	0.019	1.45204E-05	6.35995E-05
Co	896	0%	1.796	0.001402057	0.00614101
Cr	54.4244444	0%	0.109	8.51632E-05	0.000373015
Cu	239.5	0%	0.480	0.000374769	0.001641487
Fe	15662.5	5%	31.390	0.024508617	0.107347742
Hg	NA	NA	NA	NA	NA
K	NA	NA	NA	NA	NA
Li	50	0%	0.100	7.82398E-05	0.00034269
Mg	6275	2%	12.576	0.009819095	0.043007635
Mn	557.5	0%	1.117	0.000872374	0.003820997
Mo	13.525	0%	0.027	2.11639E-05	9.26977E-05
Na	4262.5	1%	8.543	0.006669943	0.029214349
Ni	37.75	0%	0.076	5.9071E-05	0.000258731
p	1700	1%	3.407	0.002660153	0.011651471
Pb	325.775556	0%	0.653	0.000509772	0.002232803
Sb	NA	NA	NA	NA	NA
Se	NA	NA	NA	NA	NA
Sr	150.625	0%	0.302	0.000235697	0.001032355
Th	NA	NA	NA	NA	NA
V	38.875	0%	0.078	6.08314E-05	0.000266442
Zn	145300	51%	291.206	0.227364854	0.995858058
Total	287577.4	100%		0.45	1.971

APPENDIX G

Ambient Impact Assessment

Dynamis Energy, LLC

Hidden Hollow Landfill WTE Facility
Air Quality Modeling Report

Prepared for:
Dynamis Energy, LLC
Eagle, ID
Contact: Doyle Pergande
208.938.2680

Prepared by:
JBR Environmental Consultants, Inc.
7669 W. Riverside Drive, Suite 101
Boise, ID 83714
Contact: Shannon Manoulian
208.853.0883

April 2012

creating solutions for today's environment

www.jbrenv.com

TABLE OF CONTENTS

1.0 PURPOSE 1

2.0 PROCESS DESCRIPTION 1
- 2.1 General Process Overview 1
- 2.2 Hidden Hollow WTE Facility 3

3.0 MODEL DESCRIPTION/JUSTIFICATION 3
- 3.1 Non-Regulatory Defaults 5

4.0 EMISSION AND SOURCE DATA 5
- 4.1 Emissions Sources 6

5.0 RECEPTOR NETWORK 9

6.0 ELEVATION DATA 10

7.0 METEOROLOGICAL DATA 10

8.0 LAND USE CLASSIFICATION 10

9.0 BACKGROUND CONCENTRATIONS 12

10.0 MODEL RESULTS AND DISCUSSION 12
- 10.1 Operating Scenario 1 15
- 10.2 Operating Scenario 2 15
- 10.3 Full Impact Analysis Model Ambient Boundaries and Receptors 16
- 10.4 Full Impact Analysis Model Runs 20

LIST OF TABLES

Table 1 Project Potential Criteria Pollutant Emissions vs. IDEQ Modeling Thresholds 6
Table 2 Project Potential TAPs Emissions vs. IDEQ Modeling Thresholds 6
Table 3 Background Concentrations 12
Table 4 SIL Model Predicted Impacts – Dynamis Facility SIL Analysis 13
Table 5 Co-Contributing Source Emission Rates: Scenario 1 15
Table 6 Co-Contributing Source Emission Rates: Scenario 2 16
Table 7 Full Impact Analysis Model Run Summary 21
Table 8 Full Impact Analysis Model Results - Scenario 1 22
Table 9 Full Impact Analysis Model Results - Scenario 2 22
Table 10 1-hr NO_x NAAQS Exceedance Source Contributions 24

LIST OF APPENDICES

APPENDIX A	Site Location Map and Site Plan
APPENDIX B	Scrubber, Ash System Baghouse and Emergency Generator Specifications
APPENDIX C	Emissions Inventory
APPENDIX D	DEQ Forms
APPENDIX E	SIL Receptor List
APPENDIX F	Model Protocol Approval
APPENDIX G	MAXDAYCONT Output Files

1.0 PURPOSE

This air quality modeling report documents the methodology used to prepare an air quality analyses in support of an Idaho Department of Environmental Quality (IDEQ) 15-Day Pre-Permit Construction (15-Day) application and subsequent Permit to Construct (PTC) application for the Dynamis Energy, LLC (Dynamis) Waste-To-Energy (WTE) facility at the Ada County Landfill in Ada County, ID (Appendix A). This report seeks to fully document and report the methods and techniques used to perform the modeling in support of Dynamis' 15-Day and PTC applications.

2.0 PROCESS DESCRIPTION

The Dynamis WTE facility uses a proprietary thermal conversion technology process to convert municipal solid waste (MSW), including automobile tires, to energy. Dynamis' technology utilizes a controlled (starved) air gasification process which thermally converts waste products to combustible gas. The two-stage process provides complete conversion of carbon to an inert ash and a controlled heat output for efficient energy recovery.

2.1 General Process Overview

The two-stage waste to energy process uses batch waste gasification and thermal combustion/oxidation. MSW is initially loaded into a primary chamber where it is thermally reacted under air controlled (starved) conditions and transformed into burnable gases and ash. Unlike typical thermal treatment methods, the gasification reactions occur at relatively low temperatures under controlled conditions. This minimizes the production of airborne 'fly ash' particulates, carryover of toxic metals, and NO_x. The gasification process ensures nearly 100% destruction (burn-out) of the combustible waste and the by-product of ash is sterile with minimal residual carbon. Metals and glass in the waste stay with the ash in inert forms and can be recovered by conventional recycling methods. To complete the process, the gases from the primary gasification chamber enter the secondary combustion chamber where they are mixed with oxygen (taken from ambient air) and oxidized at high temperature to complete the process. The energy from the hot gas effluent can then be recaptured for local heat, power or other forms of energy recovery.

Tipping Floor/Conveyor to Primary

The process begins by loading MSW, directly from garbage trucks, onto the tipping floor. Next the MSW is moved by conveyer into the primary gasification chamber. Waste materials can be accepted loose, bagged, baled, or on pallets. The system can also accept a wide range of bulky items such as vehicle tires, mattresses, furniture, and construction debris.

The Primary Gasification Chamber (PGC)

The MSW is then bulk-loaded into the primary gasification chamber (PGC) through a hydraulically operated door at the top or front of the chamber and a carefully controlled flow of air is introduced. Only enough air is provided to allow sufficient burning for heating to occur, typically 70 to 80 percent of the stoichiometric air requirement is introduced into the PGC. Due to the air controlled (starved) environment, the MSW gasifies and is converted to a super rich gas. Gasification occurs in the PGC at relatively low temperatures of 450-550°C (800-1000°F), converting the waste into gas and ash. The hot gases are then passed to the secondary combustion system.

The Secondary Combustion System (SCS)

Once the hot gas is passed into the secondary combustion system (SCS) they are actively mixed with oxygen (taken from the ambient air). This process is achieved by the use of a turbulent air ring which flashes (combusts) the mixture at temperatures of 1,800-2,000°F. The turbulent air ring and temperature assure that a rapid and thorough mixture of the super rich gas and oxygen is achieved. Combustion gases are maintained at temperatures of 1,800-2,000F for an extended retention time prior to entering a heat recovery steam generator. This insures all combustible gases are consumed.

Boiler/Steam Production

The flame created by the super rich gas/oxygen combustion is directed through a high temperature power boiler where water is converted into high pressure steam. The boiler has an extended retention time design that provides maximum furnace volume without excessive refractory, plus increased radiant surface for maximum heat absorption.

Energy Production

This high pressure steam generated from the boiler is directed through a power generation turbine creating electrical power that can be routed to the local electrical grid.

Process Logic Control System

All aspects of combustion and fuel feed are monitored and controlled by state-of-the-art logic, 3 times per second. This is especially important with the ever-changing combustion conditions of

biomass and waste fuels. The microprocessor analyzes data from various inputs such as switches, thermocouples, RTDs and an oxygen sensor to continually monitor exhaust and optimize air-to-fuel mixture, and signal when anything needs attention.

Ash Handling

Recyclables and ash from the process are collected for reclamation. After each gasification cycle in the PGC the remaining material (approximately 10% of the original volume) will be moved by conveyor belt to the ash handling system, where all recyclables are sorted and retained automatically. The end by-product of the gasification process is inert ash, which will be collected and possibly sold as an important additive in concrete and cement based building materials.

2.2 Hidden Hollow WTE Facility

The Dynamis WTE facility at the Hidden Hollow Landfill will consist of one thermal conversion unit, capable of processing up to 408 tons per day (tpd) of MSW, including automobile tires. The MSW will be delivered to the facility and dumped on the tipping floor inside the facility building. The waste is then conveyed to one of twelve primary gasification chambers in the thermal conversion unit. The system will operate as a batch process with each primary gasification chamber being loaded in succession. The super rich gas created in each of the primary gasification chambers is passed into the secondary combustion chamber where it is mixed with oxygen creating a flame. The flame is directed through a high temperature power boiler where water is converted into high pressure steam. The high pressure steam generated from the boiler is directed through a power generation turbine creating electrical power.

Ash produced in the primary gasification chamber is collected in bins beneath the chambers. The ash is moved by conveyor belt to the ash handling system, where the material is conveyed through a roller drum magnet to separate ferrous metals from the ash. Ferrous metals collected in the roller drum magnet are collected in the ferrous metals storage bin. The remaining ash material then passes through an eddy current pulse separator, which removes any aluminum from the ash. Aluminum material then travels via conveyor to the aluminum storage bin; clean ash material is transferred via conveyor to the clean ash storage bin. The ash handling system is completely enclosed. In addition, a baghouse is used to control particulate emissions during material separation and handling in the ash handling room.

3.0 MODEL DESCRIPTION/JUSTIFICATION

The model used for this application is AERMOD (version 12060), the USEPA–approved model for near-field new source review. Based on EPA guidance AERMOD is the most appropriate of

the EPA-approved models given the site's physical characteristics and the facility emission sources. AERMOD was applied as recommended in EPA's Guideline on Air Quality Models and consistent with guidance in IDEQ's Dispersion Modeling Guidelines. Non-regulatory default options were employed; specifically the Ozone Limiting Method (OLM) was employed for modeling 1-hr NO2 impacts. This is discussed further below.

The Prime building downwash algorithm was applied for the facility. Terrain data was processed consistent with the modeling protocol submitted to DEQ and EPA guidance for AERMAP. Meteorological data recommended for this analysis was provided by IDEQ. IDEQ requires modeling of criteria pollutants if emissions from the proposed source exceed the modeling thresholds set forth the IDEQ Dispersion Modeling Guidelines.

The criteria pollutants which exceed the modeling threshold at the Dynamis WTE facility are PM_{10}, $PM_{2.5}$, NO_x, SO_2 and Pb. In addition, benzene, cadmium, dioxin, formaldehyde, hydrogen fluoride, hydrogen chloride, mercury and nickel exceed the TAPs screening emission levels (ELs) in IDAPA 58.01.01.585 and 586. The Dynamis facility will be subject to 40 CFR Part 60 Subpart Eb - Standards of Performance for Large Municipal Waste Combustors for Which Construction is Commenced After September 20, 1994 or for Which Modification or Reconstruction is Commenced After June 19, 1996. Emissions of dioxin, cadmium, hydrochloric acid and mercury are regulated under NSPS Subpart Eb. IDAPA 58.010.01, Subsection 210.20 (a) states the following:

> *"If the owner or operator demonstrates that the toxic air pollutant from the source or modification is regulated by the Department at the time or permit issuance under 40 CFR Part 60, 40 CFR Part 61, or 40 CFR Part 63, no further procedures for demonstrating preconstruction compliance will be required under Section 210 for that toxic air pollutant as part of the application process."*

Therefore, dioxin, cadmium, hydrochloric acid and mercury were not included in the modeling analysis.

In general, the AERMOD model application used model source data consistent with the permit emission inventory. The model receptor network and model domain proposed meet all EPA and IDEQ recommendations, and ensure a complete dispersion analysis that captured maximum potential impacts.

3.1 Non-Regulatory Defaults

As discussed above, the Ozone Limiting Method (OLM) was used to demonstrate compliance with 1-hr NO_2 impacts. The OLM was employed as recommended in the June 28, 2010 Memorandum to EPA Regional Air Division Directors from Stephen D. Page, Director EPA Office of Air Quality Planning and Standards, titled "Guidance Concerning the Implementation of the 1-hr NO_2 NAAQS for the Prevention of Significant Deterioration Program" and IDEQ modeling protocol approval. The OLM requires in-stack ratios of NO_2/NO_x emissions as well as hourly monitored background ozone (O_3) concentrations. The NO_2/NO_x in-stack ratio of 0.15 for the thermal conversion unit was conservatively based on a blend of in-stack ratios for natural gas and diesel generator emissions as found in "Assessment of Non-Regulatory Options in AERMOD, Specifically OLM and PVMRM" from the San Joaquin Valley Air Pollution Control District In reality, the thermal conversion unit functions in a similar manner to a thermal oxidizer. Thermal oxidizers are routinely used to enhance destruction of NO_x, CO and SO_x emissions at other facilities. As a result, it is reasonable to assume that the thermal conversion unit will serve to help promote NO_x destruction during operation which would result in lower NO_2/NO_x ratios than modeled. Per DEQ and EPA guidance, 0.90 was used as the default equilibrium NO_2/NO_x ratio for the 1-hr NO_2 standard. For modeling runs including co-contributing sources, an in-stack NO_2/NO_x ratio of 0.15 was used for the thermal conversion unit, an in-stack ratio of 0.20 was used for the ACLF generators (based on in-stack ratios for diesel internal combustion engines found in the San Joaquin Valley guidance document), and the default ratio of 0.50 was used for all other sources. Also as recommended in EPA guidance, the OLMGROUP ALL option was employed.

In addition to the NO_2/NO_x ratio, hourly background O_3 concentrations are required for the OLM analysis. Hourly ozone data was provided by DEQ. The ozone backgrounds were developed using the 98th percentile value of hourly monitoring data from 2009, 2010, and 2011 from the White Pine site, in southeastern Boise, near the intersection of Boise Avenue and Apple Street.

4.0 EMISSION AND SOURCE DATA

Modeled emissions include all sources of PM_{10}, $PM_{2.5}$, NO_x SO_2, Pb, Benzene, Formaldehyde, HF, and Ni. Emission rates represent the maximum anticipated operating rates for the averaging period modeled, taking into account the maximum daily hours of operation and throughputs requested in the application for all averaging periods.

Table 1 below compares the facility's Potential to Emit (PTE) for all criteria pollutants against IDEQ Modeling Thresholds. Table 2 compares the facility's PTE for those Toxic Air Pollutants

(TAPs) that exceed the emissions screening levels in IDAPA 58.01.01.585 and 586. Emission summaries are documented in more detail in the facility's emission inventory.

Table 1 Project Potential Criteria Pollutant Emissions vs. IDEQ Modeling Thresholds

Criteria Modeling Check	PM_{10}	$PM_{2.5}$	NO_X	SO_2	CO	Pb*
Controlled Emission Rates, lb/hr (tpy)	4.72 (13.6)	4.72 (13.6)	36.1 (96.2)	10.8 (27.0)	13.2 (34.2)	26.2
Modeling Threshold, lb/hr (tpy)	0.22 (n/a)	0.054 (0.35)	0.2 (1.2)	0.21 (1.2)	15 (n/a)	14
Modeling Required:	YES	YES	YES	YES	NO	YES

*Pb emission rate and modeling threshold are in lb/month

Table 2 Project Potential TAPs Emissions vs. IDEQ Modeling Thresholds

TAPs Modeling Check	Benzene	Formaldehyde	Hydrogen Fluoride	Nickel
Controlled Emission Rates (lb/hr)	1.2E-03	1.8E-03	8.8E00	2.2E-2
Screening Emission Level (lb/hr)	8.0E-04	5.1E-04	1.7E-01	2.7E-05
Modeling Required:	YES	YES	YES	YES

4.1 Emissions Sources

Emissions sources at the facility include the following:

Thermal Conversion Units

Dynamis will operate one 408 tpd thermal conversion unit at the facility. The unit consists of the primary gasification chamber, secondary combustion chamber, and boiler. Steam generated in the boiler is used to power a power generation turbine. Emissions from the primary gasification chambers and secondary combustion chambers are exhausted through the boiler stack. The boilers will be custom made for the facility by Victory Energy. The majority of MSW, 380 tpd, will be processed between the hours of 7am and 11pm (16 hours). The remaining MSW, 28 tpd,

will be processed between 11pm and 7am. Emissions rates and model sources used in the modeling analysis will reflect both the peak and off-peak operation, for those pollutants with averaging periods less than 24 hrs (1-hr NO_x and 1-hr SO_2). The facility will process 408 total tons of MSW per day. The MSW is expected to contain moisture as well as un-combustible materials such as glass and metal. It is conservatively assumed that 90% of the MSW received will be combustible materials; therefore, emissions estimates are based on 367 tpd of combustible material (342 tpd peak, 25 tpd off-peak).

The thermal conversion unit is a source of PM_{10}, $PM_{2.5,}$ NOx, SO_2, CO, Lead, and TAPs. Emission factors for the thermal conversion unit were developed using source test data from similar units installed at other facilities in the United States. Emissions from the thermal unit (including primary chamber ignition system natural gas combustion) will be controlled by a scrubber located between the boiler and exhaust stack. The scrubber has a manufacturer guaranteed emission rate 0.595 lb/hr HCl, 71.25% control of SO2, 99% control of PM_{10}, and 90% control of particulate sized 1.5 to 2.5 micron (this equates to approximately 41% control of $PM_{2.5}$; it is estimated that particulates sized 1.5 to 2.5 micron comprise approximately 46% of $PM_{2.5}$ from gasification). Manufacturer guarantee information sheets are included in Appendix B.

Primary Gasification Chamber Ignition System

Each time waste is loaded into the primary gasification chamber and the chamber is lit, a small amount of fuel is required to ignite the chamber burner. The ignition system will be fueled by natural gas. A total of 112,000 scf/day of natural gas will be used for all ignition systems. The primary gasification chamber ignition system will exhaust through the primary and secondary chambers and out of the boiler exhaust stack (and will be controlled by the scrubber). The ignition system is a source of PM_{10}, $PM_{2.5,}$ NOx, SO_2, CO, VOCs, and TAPs. Emission factors from AP-42, Section 1.4 were used to calculate natural gas combustion emissions.

Cooling Towers

Steam exiting the turbine will be exhausted through a condenser that is cooled with water from two cooling towers. Water used in the cooling towers will be supplied by United Water. The cooling towers are a source of PM_{10} and $PM_{2.5}$. Emissions factors from AP-42 Section 13.4 and input water analysis TDS content were used to calculate cooling tower particulate emissions.

Ash Handling System

As discussed above, the ash collection system consists of various conveyors, ferrous and aluminum material separators and collection bins. A total of five dust collection units will control PM_{10}/$PM_{2.5}$ emissions from the ash handling system. The dust collectors are centrally

located in the ash handling room above the roller drum magnet and eddy current pulse separator to collect any dust generated during ash material separation and above the ferrous material, aluminum material and clean ash bins. The dust collectors will discharge to the ash system baghouse, which has a manufacturer guaranteed emission rate of 0.005 grains/dscf for particles size 10 micron and smaller. The baghouse will exhaust through a stack outside of the ash handling room, and will exhaust for approximately 45 minutes every hour. The ash handling system is a source of PM_{10}, $PM_{2.5}$ and TAPs. Ash testing data (TCLP mg/L results) was converted to an approximate mg/kg concentration to develop emission factors for pollutant emissions from the ash system. Specifications on the baghouse are included in Appendix B.

Emergency Generator

The facility will be powered by electric line power. However, a 300 kW emergency diesel generator will be installed at the facility. The proposed generator will be an EPA Tier III certified Caterpillar C9 ACERT (or similar), and will run no more than 500 hours per year. The generator will only be tested once per quarter and testing will occur between 7 am and 7 pm. The MHRDOW7 – Monthly by Hour by Day of Week emission rate factor was employed for the generator in AERMOD. One day each quarter was randomly selected for testing. However, the MHRDOW7 simulates testing on every selected day that occurs in the month selected. Therefore, air dispersion modeling results represent impacts that would occur as if the generator was tested 4 days per quarter. This results in conservative estimates of impacts from the generator. The emergency generator is a source of PM_{10}, $PM_{2.5}$, NO_x, SO_2 CO, VOCs, and TAPs. Manufacturer data and emission factors from AP-42 Section 3.3 were used to calculate generator emissions estimates. Manufacturer data is included in Appendix B.

Emissions factors for the thermal conversion unit and ash handling system used to develop the emissions inventory are based on multiple source tests of similar thermal conversion units installed at various facilities over the past 15 years. Source tests were previously provided to DEQ, but will be provided again if requested.

Cooling tower, emergency generator, and primary gasification ignition system fuel combustion emissions estimates were developed using manufacturer data and AP-42. A detailed emissions inventory for each emissions source is provided with the permit application and in Appendix C of this report. DEQ forms are provided in Appendix D.

JBR performed an initial Significant Impact Level (SIL) analysis which included only sources from the Dynamis facility and the lease boundary as the ambient air boundary. Impacts from the Dynamis WTE facility exceed the IDEQ SILs for 24-hr and annual $PM_{2.5}$, 24-hr PM_{10}, 1-hr and Annual NO_x and 1-hr SO_2. SIL model results are shown in Table 4 below. Receptors for each

pollutant and averaging period exceeding the SIL were used to perform a full impact analysis, including co-contributing sources. Excel files containing the coordinates and elevations of receptors above the SILs are included in Appendix E.

As part of the modeling protocol JBR requested, and DEQ provided, exhaust parameters and emission rates for neighboring facilities that DEQ deemed to be co-contributing sources. DEQ determined that the Hidden Hollow Energy, LLC (HHE) facility and Ada County Landfill (ACLF) are co-contributing sources for the Dynamis facility. Emissions points at the Hidden Hollow Energy facility include four internal combustion generator engines; emissions points at the Ada County Landfill include two generators and two landfill gas flares. In the modeling protocol approval received from DEQ (included as Appendix F) DEQ provided exhaust parameters and emission rates for two operating scenarios for the HHE engines and ACLF sources. Ambient air boundary information for the HHE facility and ACLF were provided via email from Cheryl Robinson, DEQ.

5.0 RECEPTOR NETWORK

The Dynamis WTE facility is located just outside of the city of Boise and is bordered by residential development to the east and west. The property covers approximately 8.0 acres. Consistent with IDEQ guidance the ambient air boundary used in this analysis is the lease boundary, which also serves as the public access boundary. Dynamis will control access to the leased property through posting of signage and by training facility personnel to patrol and prevent public access. In addition, Dynamis will ensure that Ada County Landfill employees understand that the facility is property of Dynamis, and access is restricted to anyone other than Dynamis personnel or invited guests.

Receptor density was set at a spacing of 10 meters along the ambient air boundary, 20 meter spacing for the first 30 meters past the boundary, then receptors were set at a density of one per 35 meters out to 60 meters away from the property boundary, 50 meters out to 100 meters from the boundary, 100 meters to 500 meters, 250 meters out to 2,000 meters from the ambient air boundary, and 500 meters out to 5 kilometers past the ambient air boundary. In addition, discrete receptors were added near locations of maximum impacts to ensure the true maximum impacts were captured. The receptor network used ensures that the analysis meets or exceeds EPA receptor network requirements and captures the maximum impact from the facility. The receptor networks used for the full impact analyses are discussed in detail in Section 10.3.

6.0 ELEVATION DATA

All source base elevations were calculated based on the site grading plan and finished floor elevations for the property. All stack heights were referenced to re-graded ground surface elevations. Receptor elevations were initially calculated from USGS 1/3 arc second NED data using the Bee-Line BEEST preprocessing system. Receptor elevations along the Dynamis fenceline were adjusted to an elevation of 3175 ft (967.74 m) per re-graded elevation as shown in the site grading plan (Appendix A). In addition, receptor elevations between the facility's western property boundary and the access road running from southwest to northeast along the boundary, as well as receptors located within the access road, were adjusted per the site grading plan.

7.0 METEOROLOGICAL DATA

Preprocessed AERMOD ready meteorological files were provided upon request from Darrin Mehr of IDEQ. The data was processed by ENVIRON, using National Weather Service surface data observations and upper air data observations from the Boise, Idaho Airport for the period 2005-2009. In addition to the hourly NWS data, 1-minute wind speed and wind direction data from Boise Airport were used to resolve calm and variable wind conditions using the AERMINUTE preprocessor. The data files cover the years 2005 through 2009. The data presented by IDEQ is model-ready, and was used without alteration or processing.

8.0 LAND USE CLASSIFICATION

AERMOD includes rural and urban algorithm options. These options affect the wind speed profile, dispersion rates, and mixing-height formula used in calculating ground-level pollutant concentrations. A protocol was developed by USEPA to classify an area as either rural or urban for dispersion modeling purposes. The classification is based on average heat flux, land use, or population density within a three-km radius from the plant site. Of these techniques, the USEPA has specified that land use is the most definitive criterion (USEPA, 1987). The urban/rural classification scheme based on land use is as follows:

> *The land use within the total area, A_0, circumscribed by a 3-km circle about the source, is classified using the meteorological land use typing scheme proposed by Auer (1978). The classification scheme requires that more than 50% of the area, A_0, be from the following land use types in order to be considered urban for dispersion modeling purposes: heavy industrial (I1); light-moderate industrial (I2); commercial (C1); single-family compact*

residential (R2); and multi-family compact residential (R3). Otherwise, the use of rural dispersion coefficients is appropriate.

The Dynamis WTE facility is located just outside of the city of Boise and is bordered by residential development to the east and west. Although the immediate vicinity of the site is residential, site and map reconnaissance showed that the area A_0 within a 3-km circle of the source is below the 50% urban land use criteria necessary for use of urban dispersion coefficients. Rural dispersion coefficients were therefore used in the air quality dispersion modeling.

9.0 BACKGROUND CONCENTRATIONS

Background concentrations for criteria pollutants as provided by IDEQ are shown in Table 3 below. Background values for TAPs are zero.

Table 3 Background Concentrations

Pollutant	Averaging Period	Background Concentration (ug/m3)	Source
PM_{10}	24-hour	73	Historical DEQ airshed modeling for the Boise Area; intended to represent the background at the landfill.
$PM_{2.5}$	24-hr	19.3	Meridian, Idaho monitor 2008,2009, and 2010 finalized data from the U.S. EPA AirData website. The 24-hr average background is the 3-year average of each year's 98th percentile value.
	Annual	6.3	Meridian, Idaho monitor 2008,2009, and 2010 finalized data from the U.S. EPA AirData website. The annual average background is the 3-year average of the weighted mean value for each year.
NO_2	1-hr	Variable	Hourly background concentrations based on 2007 and 2010 data from the ITD monitoring site in Boise. Values are the 98th percentile values for each hour during a day.
	Annual	40	Boise monitoring data
SO_2	1-hr	33.1	Fargo ND/Moorhead MN monitoring data, 2006-2008, 1st high value plus one standard deviation of values meeting 75% completeness critieria
	Annual	2.6	Fargo ND/Moorhead MN monitoring data, 2004-2008, all non-zero values meeting 75% completeness criteria are 0.001ppm = 2.6 ug/m^3
Pb	Rolling 3-month average	0.04	Default: Urban>45,000

10.0 MODEL RESULTS AND DISCUSSION

As stated above, JBR performed both a SIL analysis for the Dynamis facility and full impact analysis including the HHE facility and ACLF as co-contributing sources. Results of the SIL analysis are shown in Table 4.

Table 4 SIL Model Predicted Impacts – Dynamis Facility SIL Analysis

Pollutant	Averaging Period	Modeled Impact (ug/m^3)	SIL (ug/m^3)	NAAQS/ AAC/AACC (ug/m^3)	Modeled Value Used (5 years met data)
PM_{10}	24-hour	5.2	5.0	150	6th highest
$PM_{2.5}$	24-hr	8.4	1.2	35	1st highest
	Annual	1.5	0.3	15	1st highest
NO_2	1-hr	110	7.5	188	Max8th highest maximum daily 1-hr value for each year averaged for all years
	Annual	3.5	1.0	100	1st highest
SO_2	1-hr	53.0	7.9	196	Max 4th highest maximum daily 1-hr value for each year averaged for all years
	Annual	0.95	1.0	80	1st highest
Pb	Rolling 3-month average	0.02	n/a	0.15	1st highest
Benzene	Annual	2.0E-05	n/a	1.2E-01	1st highest
Formaldehyde	Annual	1.6E-04	n/a	7.7E-02	1st highest
HF	24-hr	16.9	n/a	125	1st highest
Nickel	Annual	2.3E-03	n/a	4.2E-03	1st highest

Receptors exceeding the SIL for each pollutant and averaging period were used as the receptors for the full impact analysis. DEQ provided exhaust parameters and emission rates for two operating scenarios for the HHE facility and ACLF sources. Ambient air boundaries for HHE and the ACLF were also provided by DEQ and are shown in Figure 1.

Figure 1 Ambient Air Boundaries - Dynamis, HHE Facility and ACLF

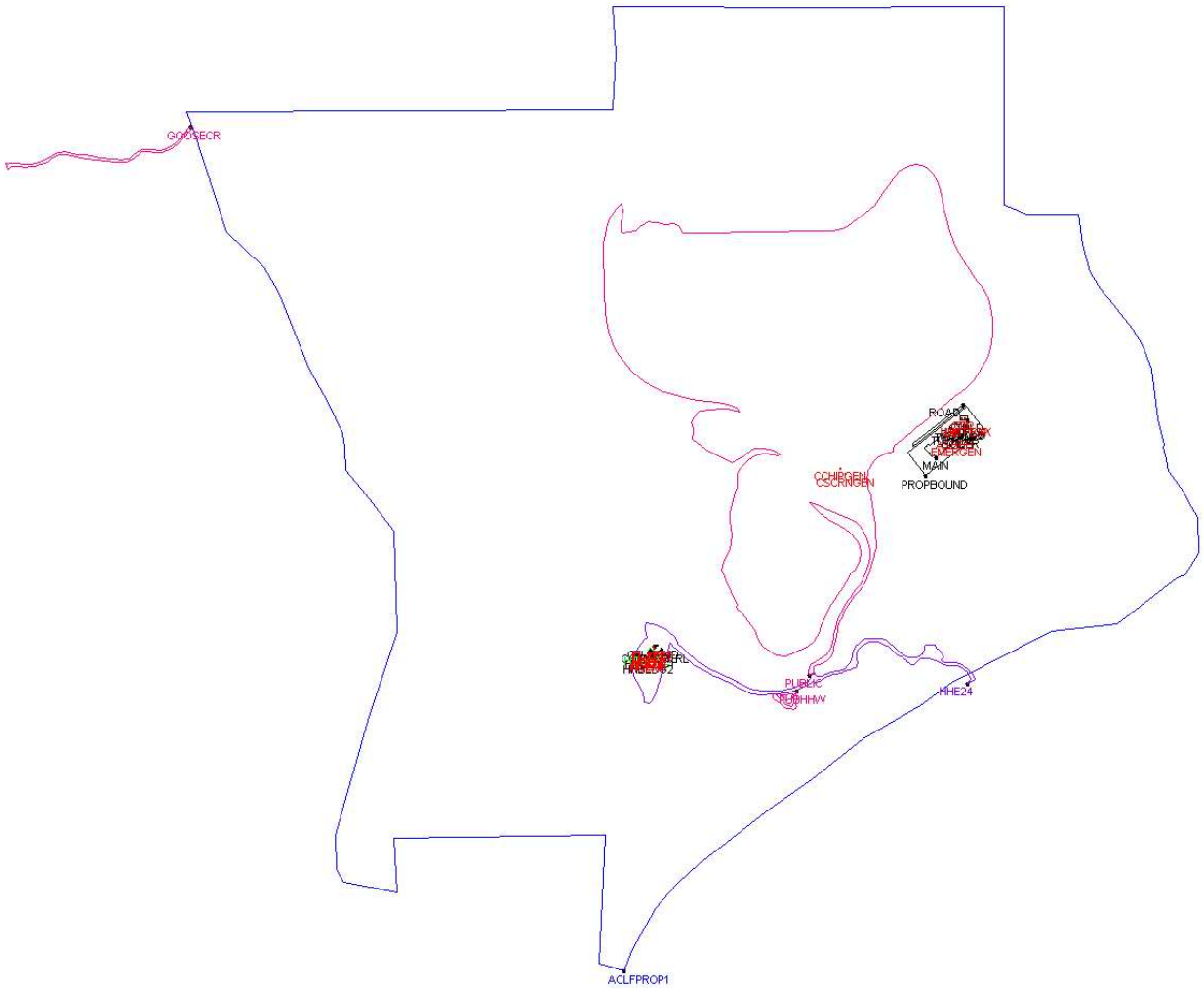

Pink lines define areas where the general public will have access when the landfill is open (typically 7 am to 7 pm). Purple lines define areas where Hidden Hollow Energy employees (members of the public for Dynamis modeling) will typically have access 24 hours per day. Blue lines define the outer boundary of the ACLF property. Black lines (not including the road outlined in black) define the Dynamis property boundary. Ambient impacts caused by each of the three facilities with each facility's ambient air boundary are not evaluated for compliance with the NAAQs; a facility cannot cause or contribute to a NAAQs exceedance within its own ambient air boundary.

10.1 Operating Scenario 1

HHE will be assumed to operate four generator engines with 2,400 standard cubic feet per minute (scfm) of landfill gas limited to an H2S content of 180 parts per million by volume (ppmv). The HHE generators each operate 24 hours per day and 8760 hours per year. The ACLF flaring operations will be assumed to operate at 950 scfm of landfill gas combusted in one flare. The ACLF flare will operate 24 hours a day, 8760 hours per year. The ACLF Wood Chipper and Power Screen Engines were assumed to both operate 24 hours per day and 3,300 hours per year. Emission rates for HHE and ACLF sources for operating scenario 1 are shown in Table 5 below.

Table 5 Co-Contributing Source Emission Rates: Scenario 1

Emission Rates: Scenario 1						
Source	**$PM_{10}/PM_{2.5}$**		**SO_2**		**NO_x**	
	(lb/hr)	**(T/yr)**	**(lb/hr)**	**(T/yr)**	**(lb/hr)**	**(T/yr)**
Hidden Hollow Energy Sources						
Generator Engine 1	0.78	3.42	1.09	4.77	2.46	10.77
Generator Engine 2	0.78	3.42	1.09	4.77	2.46	10.77
Generator Engine 3	0.78	3.42	1.09	4.77	2.46	10.77
Generator Engine 4	0.78	3.42	1.09	4.77	2.46	10.77
Ada County Landfill Sources						
Flare 1	0.92	4.02	5.78	25.30	1.75	7.65
Chipper Engine	0.30	0.50	0.008	0.01	5.36	8.84
Power Screen Engine	0.27	0.44	0.001	0.002	3.79	6.25

10.2 Operating Scenario 2

Operating scenario 2 assumes that the HHE generators are non-operational and ACLF is combusting 3,350 scfm of landfill gas at 600 ppmv of H2S. The landfill gas is split evenly

between the two flares, which are assumed to each operate 24 hours per day, 8760 hours per year. The Wood Chipper and Power Screen engines are assume to operate at full capacity 24 hours per day, 3,300 hours per year. Emission rates for ACLF sources for operating scenario 2 are shown in Table 6 below.

Table 6 Co-Contributing Source Emission Rates: Scenario 2

Emission Rates: Scenario 2						
Source	**$PM_{10}/PM_{2.5}$**		**SO_2**		**NO_x**	
	(lb/hr)	**(T/yr)**	**(lb/hr)**	**(T/yr)**	**(lb/hr)**	**(T/yr)**
Ada County Landfill Sources						
Flare 1	1.62	7.08	10.19	44.61	3.08	13.49
Flare 2	1.62	7.08	10.19	44.61	3.08	13.49
Chipper Engine	0.30	0.50	0.008	0.01	5.36	8.84
Power Screen Engine	0.27	0.44	0.001	0.002	3.79	6.25

10.3 Full Impact Analysis Model Ambient Boundaries and Receptors

A total of ten model runs were setup for each of the two co-contributing source operating scenarios. The model runs were based on the receptors above the SIL for each pollutant and averaging period above the SIL within each of the three ambient air boundary scenarios. The three ambient air boundary scenarios include the following:

- "7AM to 7PM" in which the public has access to certain areas of the landfill, and therefore ACLF sources can contribute to a NAAQs exceedance within the public access boundary inside the larger ACLF property boundary. Dynamis and HHE sources can also contribute to a NAAQs exceedance within this boundary.
- "Night" in which the public does not have access to any areas with the ACFL boundary and therefore ACLF sources cannot contribute to a NAAQs exceedance anywhere within the ACLF property boundary. Only Dynamis and HEE sources can contribute to a NAAQs exceedance within this boundary.
- "24-hour" scenario includes all receptors outside the larger ACLF property boundary. Dynamis, HHE and ACLF sources can contribute to a NAAQs exceedance outside of this property boundary.

It should be noted that there were no Dynamis receptors above the SIL for any pollutant or averaging period located within the HHE property boundary.

Receptors above the SIL for each pollutant and averaging period and ambient air boundary are shown in Figures 2 to 4 below.

Figure 2 "7AM -7PM" Receptors

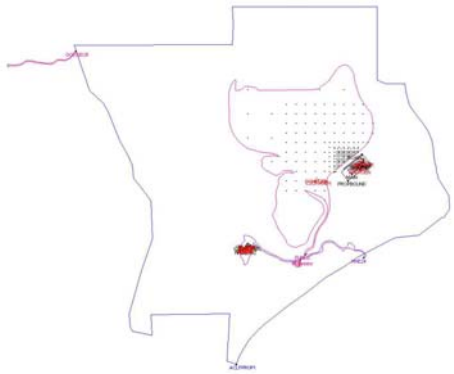	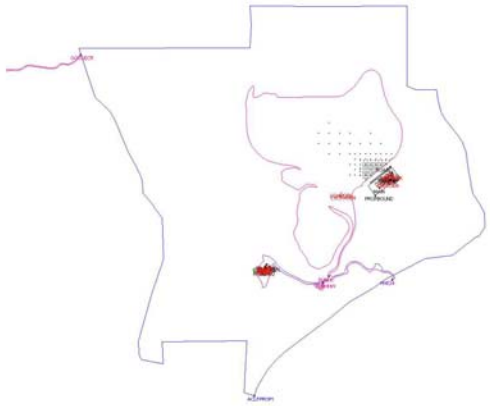
1-hr NO_x Receptors	24-hr $PM_{2.5}$ Receptors
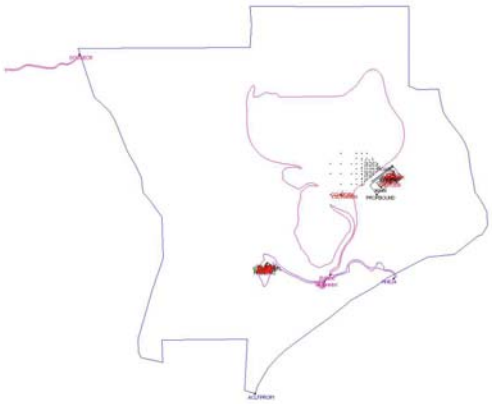	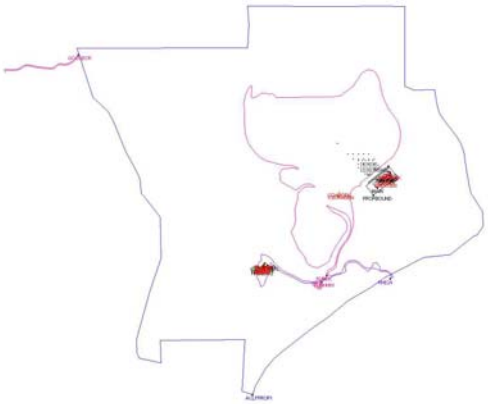
1-hr SO_2 Receptors	Annual NO_x and $PM_{2.5}$ Receptors

Figure 3 "Night" Receptors

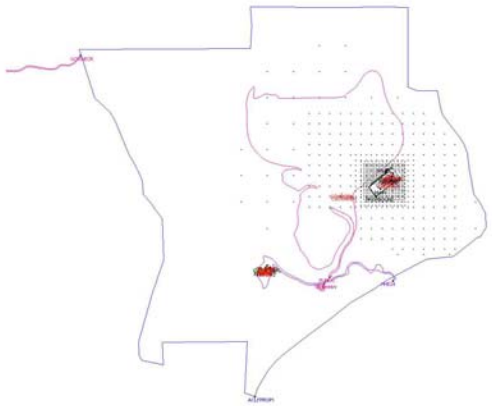

1-hr NO_x Receptors

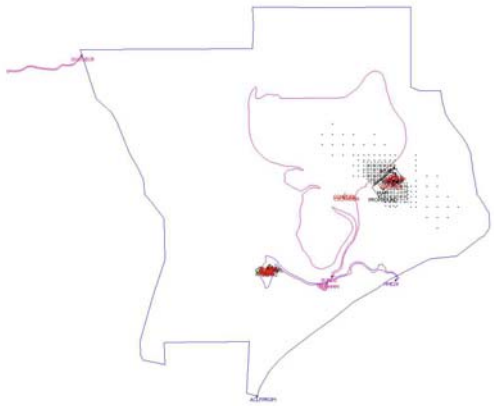

24-hr $PM_{2.5}$ Receptors

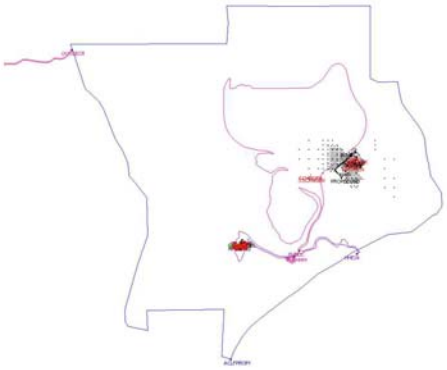

1-hr SO_2 Receptors

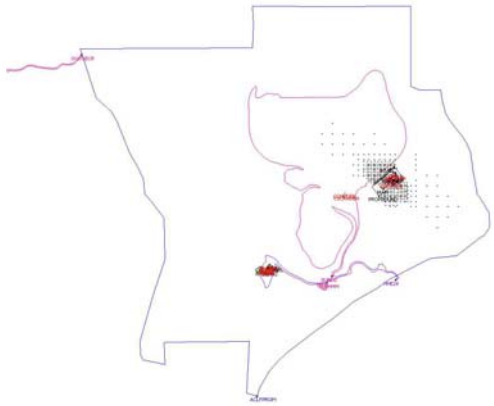

24-hr PM_{10} Receptors

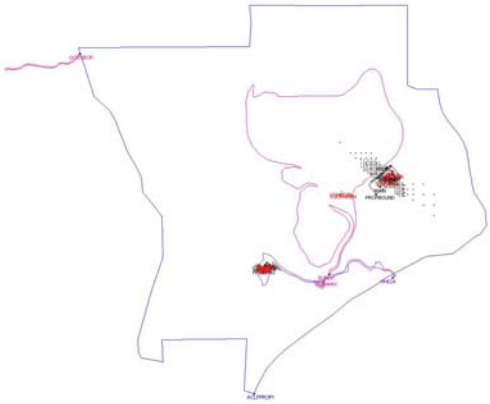

Annual $PM_{2.5}$ and NO_x receptors

Figure 4 "24-hour" Receptors

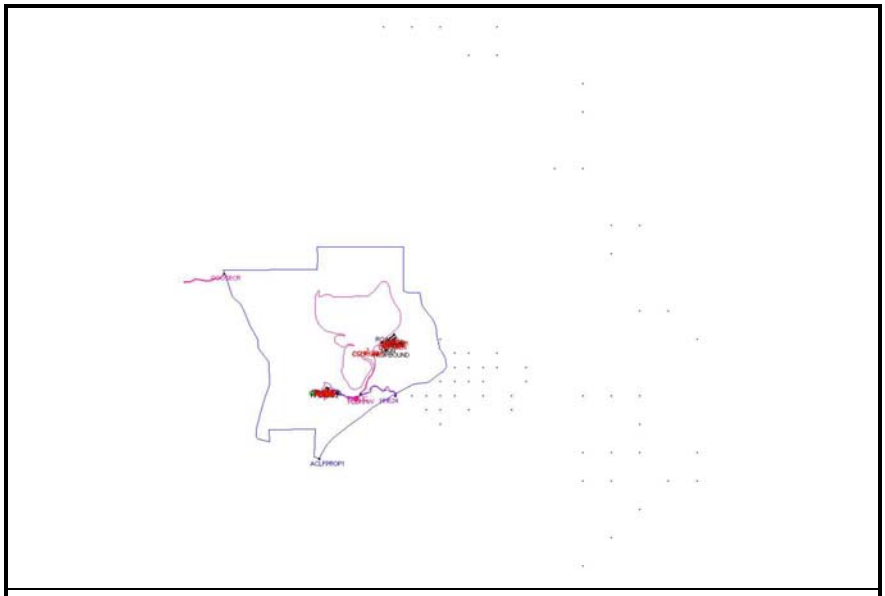

1-hr NO_x Receptors

10.4 Full Impact Analysis Model Runs

A total of ten model runs were setup for each of the two co-contributing source operating scenarios, based on the combination of ambient air boundaries listed above, receptors above the SIL within those boundaries, and sources which could contribute to an exceedance of the NAAQs at those receptors. The model runs are summarized in Table 7 below.

Table 7 Full Impact Analysis Model Run Summary

Operating Scenario	Pollutant	Averaging Period	Model Name	Description
Scenario 1	NO_x	1-hr	ALL_S1_NOx_7AP	Receptors exceeding 1-hr NO_x SIL within the 7am to 7pm public access area at the ACLF. Sources include Dynamis, HHE and ACLF (ACLF sources operating 7am to 7pm only).
	NO_x	1-hr	ALL_S1_NOx_NIGHT	Receptors exceeding 1-hr NO_x SIL within the ACLF boundary (blue outline). Sources include Dynamis and HHE.
	NO_x	1-hr	ALL_S1_NOx	Receptors exceeding 1-hr NO_x SIL outside the ACLF boundary. Sources include Dynamis, HHE and ACLF.
	$PM_{2.5}$	24-hr	ALL_S1_PM2.5_7AP	Receptors exceeding 24-hr PM2.5 SIL within the 7am to 7pm public access area at the ACLF. Sources include Dynamis, HHE and ACLF (ACLF sources operating 7am to 7pm only).
	$PM_{2.5}$	24-hr	ALL_S1_PM2.5_NIGHT	Receptors exceeding 24-hr PM2.5 SIL within the ACLF boundary (blue outline). Sources include Dynamis and HHE.
	SO_2	1-hr	ALL_S1_SO2_7AP	Receptors exceeding 1-hr SO_2 SIL within the 7am to 7pm public access area at the ACLF. Sources include Dynamis, HHE and ACLF (ACLF sources operating 7am to 7pm only).
	SO_2	1-hr	ALL_S1_SO2_NIGHT	Receptors exceeding 1-hr SO_2 SIL within the ACLF boundary (blue outline). Sources include Dynamis and HHE.
	PM_{10}	24-hr	ALL_S1_PM10_NIGHT	Receptors exceeding 24-hr PM_{10} SIL within the ACLF boundary (blue outline). Sources include Dynamis and HHE.
	NO_x, $PM_{2.5}$	Annual	ALL_S1_ANNUAL_7AP	Receptors exceeding Annual NO_x and PM2.5 SIL within the 7am to 7pm public access area at the ACLF. Sources include Dynamis, HHE and ACLF (ACLF sources operating 7am to 7pm only).
	NO_x, $PM_{2.5}$	Annual	ALL_S1_ANNUAL_NIGHT	Receptors exceeding Annual NO_x and PM2.5 SIL within the ACLF boundary (blue outline). Sources include Dynamis and HHE.
Scenario 2	NO_x	1-hr	ALL_S2_NOx_7AP	Receptors exceeding 1-hr NO_x SIL within the 7am to 7pm public access area at the ACLF. Sources include Dynamis and ACLF (ACLF sources operating 7am to 7pm only).
	NO_x	1-hr	ALL_S2_NOx_NIGHT	Receptors exceeding 1-hr NO_x SIL within the ACLF boundary (blue outline). Sources include Dynamis.
	NO_x	1-hr	ALL_S2_NOx	Receptors exceeding 1-hr NO_x SIL outside the ACLF boundary. Sources include Dynamis and ACLF.
	$PM_{2.5}$	24-hr	ALL_S2_PM2.5_7AP	Receptors exceeding 24-hr $PM_{2.5}$SIL within the 7am to 7pm public access area at the ACLF. Sources include Dynamis and ACLF (ACLF sources operating 7am to 7pm only).
	$PM_{2.5}$	24-hr	ALL_S2_PM2.5_NIGHT	Receptors exceeding 24-hr $PM_{2.5}$SIL within the ACLF boundary (blue outline). Sources include Dynamis.
	SO_2	1-hr	ALL_S2_SO2_7AP	Receptors exceeding 1-hr SO_2 SIL within the 7am to 7pm public access area at the ACLF. Sources include Dynamis and ACLF (ACLF sources operating 7am to 7pm only).
	SO_2	1-hr	ALL_S2_SO2_NIGHT	Receptors exceeding 1-hr SO_2 SIL within the ACLF boundary (blue outline). Sources include Dynamis.
	PM_{10}	24-hr	ALL_S2_PM10_NIGHT	Receptors exceeding 24-hr PM_{10} SIL within the ACLF boundary (blue outline). Sources include Dynamis.
	NO_x, $PM_{2.5}$	Annual	ALL_S2_ANNUAL_7AP	Receptors exceeding Annual NO_x and $PM_{2.5}$SIL within the 7am to 7pm public access area at the ACLF. Sources include Dynamis and ACLF (ACLF sources operating 7am to 7pm only).
	NO_x, $PM_{2.5}$	Annual	ALL_S2_ANNUAL_NIGHT	Receptors exceeding Annual NO_x and $PM_{2.5}$SIL within the ACLF boundary (blue outline). Sources include Dynamis.

The results of the full impact analysis for Scenario 1 and Scenario 2 are shown in Table 8 and Table 9, respectively. Maximum impacts of 24-hr PM_{10}, 24-hr $PM_{2.5}$, 1-hr NO_x, and 1-hr SO_2 are the same for both Scenario 1 and Scenario 2. Maximum impacts of annual $PM_{2.5}$ occur during Scenario 1; maximum impacts of annual NO_x occur during Scenario 2.

Table 8 Full Impact Analysis Model Results - Scenario 1

Pollutant	Averaging Period	Modeled Impact (ug/m^3)	Background Concentration (ug/m^3)	Total Concentration (ug/m^3)	NAAQS/ AAC/AACC (ug/m^3)	Modeled Value Used (5 years met data)
PM_{10}	24-hour	5.2	73	78.2	150	6th highest
$PM_{2.5}$	24-hr	8.38	19.3	27.7	35	1st highest
	Annual	1.55	6.3	7.85	15	1st highest
NO_2	1-hr	213.4	Background included in modeled impact	213.4	188	Max8th highest maximum daily 1-hr value for each year averaged for all years
	Annual	3.58	40	40.6	100	1st highest
SO_2	1-hr	53.0	33.1	86.1	196	Max 4th highest maximum daily 1-hr value for each year averaged for all years

Table 9 Full Impact Analysis Model Results - Scenario 2

Pollutant	Averaging Period	Modeled Impact (ug/m^3)	Background Concentration (ug/m^3)	Total Concentration (ug/m^3)	NAAQS/ AAC/AACC (ug/m^3)	Modeled Value Used (5 years met data)
PM_{10}	24-hour	5.2	73	78.2	150	6th highest
$PM_{2.5}$	24-hr	8.38	19.3	27.7	35	1st highest
	Annual	1.54	6.3	7.84	15	1st highest
NO_2	1-hr	213.4	Background included in modeled impact	213.4	188	Max8th highest maximum daily 1-hr value for each year averaged for all years
	Annual	3.56	40	43.6	100	1st highest
SO_2	1-hr	53.0	33.1	86.1	196	Max 4th highest maximum daily 1-hr value for each year averaged for all years

As shown in Table 8 and 9 above, maximum impacts of 1-hr NO_x exceed the NAAQs. These exceedances occur during the "7AM-7PM" model runs. The MAXDAYCONT output option in AERMOD was used to determine if impacts from the Dynamis facility exceed the SIL at the receptors where exceedances of the 1-hr NOx NAAQS occur. For Scenario 1, the 1-hr NOx NAAQS is exceeded at 3 receptor locations. The maximum contribution from Dynamis at each of these receptors is below the SIL. MAXDAYCONT output files are included in Appendix G and shown in Table 10 below. Dynamis sources are shown in the output files as PEAK, OFFPEAK and EMERGEN.

Electronic copies of all input, output, and support modeling files necessary to duplicate the model results accompany this submittal to IDEQ.

Table 10 1-hr NO_x NAAQS Exceedance Source Contributions

X	Y	AVERAGE CONC	ZELEV	ZHILL	ZFLAG	AVE	GRP	RANK	CONT PEAK	CONT OFFPEAK	CONT EMERGEN	CONT HHE	CONT FLARE1	CONT ACGEN	CONT BG	CONT ALL
Scenario 1																
558300	4839300	213.39	983.56	989	0	1-HR	ALL	8TH	0.01	0	0	0.0020	0.001	183.32	30.06	213.39
558200	4839400	202.16	986.36	989.35	0	1-HR	ALL	8TH	0.00	0	0	0.0016	0.001	171.32	30.84	202.16
558200	4839300	197.60	990.32	990.32	0	1-HR	ALL	8TH	4.35	0	0	0.0169	0.004	151.00	42.22	197.60
Scenario 2																
558300	4839300	213.39	983.56	989.00	0	1-HR	ALL	8TH	0.01	0	0	0	0.002	183.32	30.06	213.39
558200	4839400	202.16	986.36	989.35	0	1-HR	ALL	8TH	0.00	0	0	0	0.001	171.32	30.84	202.16
558200	4839300	197.59	990.32	990.32	0	1-HR	ALL	8TH	4.35	0	0	0	0.013	151.00	42.22	197.59

APPENDIX A

Site Location Map and Site Plans

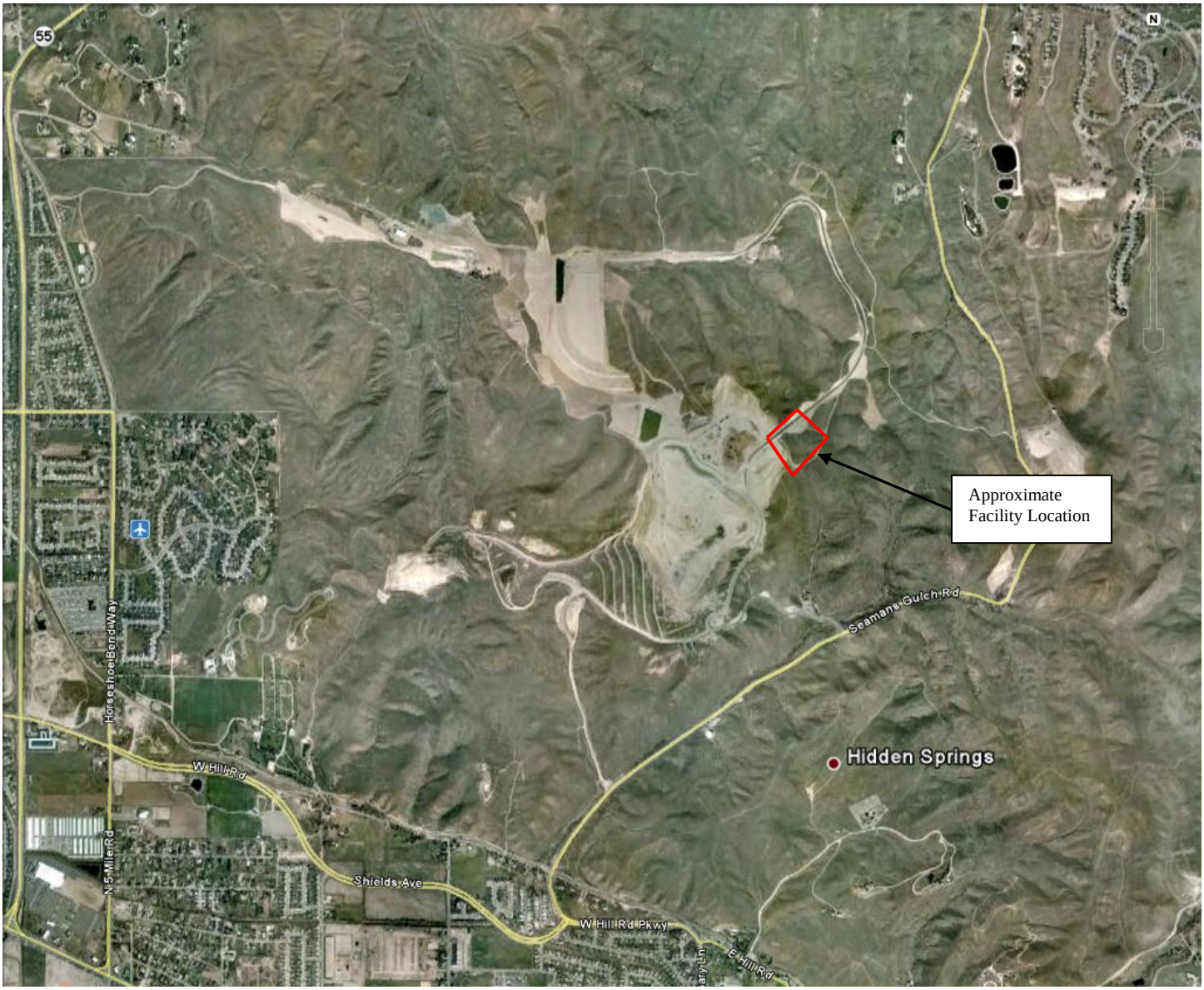

Dynamis Energry, LLC
Ada County Landfill WTE Facility

Figure 1 – Site Location

HIDDEN HOLLOW LANDFILL WASTE TO ENERGY PLANT

SITUATED WITHIN THE NORTHEAST QUARTER OF THE NORTHEAST QUARTER (NE4 NE4) OF SECTION 12, TOWNSHIP 4 NORTH, RANGE 1 EAST, BOISE MERIDIAN, AND GOVERNMENTLOT 1 OF SECTION 7 AND GOVERNMENT LOT 7 OF SECTION 6, TOWNSHIP 4 NORTH, RANGE 2 EAST, BOISE MERIDIAN, ADA COUNTY IDAHO

ADA COUNTY, IDAHO

prepared by:

DYNAMIS ENERGY, LLC

776 EAST RIVERSIDE DRIVE, SUITE 150
EAGLE, IDAHO 83616
CONTACT: DOYLE PERGANDE, P.E.
PHONE: (208) 938-2680

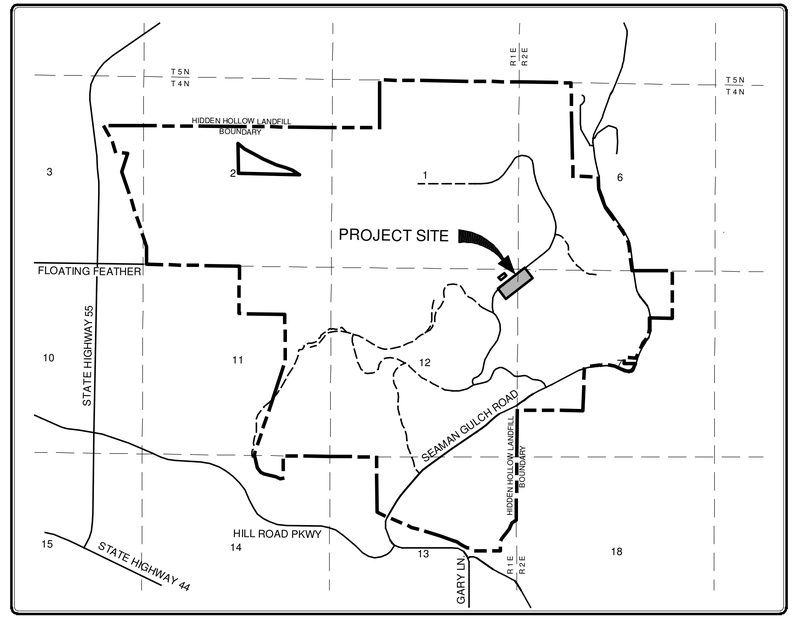

VICINTY MAP
1"=2000'

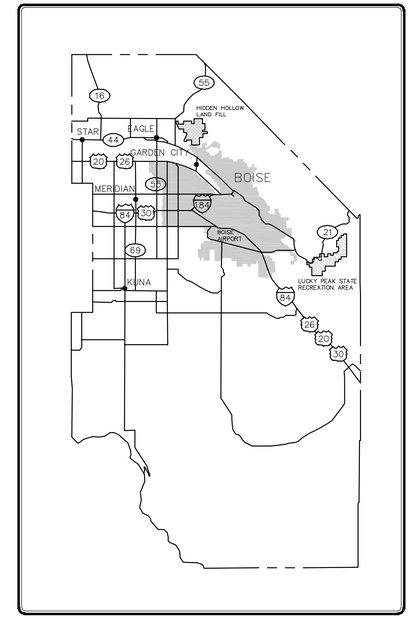

ADA COUNTY MAP
NOT TO SCALE

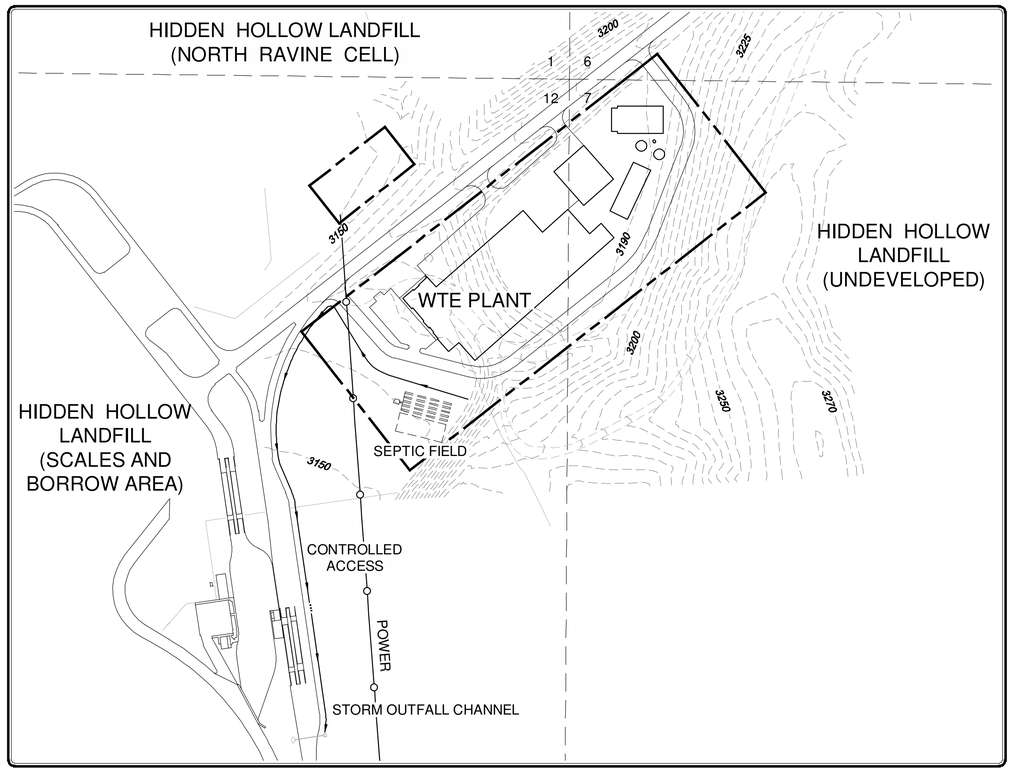

LOCATION MAP
1"=150'

BASIS OF BEARING

THE WEST LINE OF THE NORTHWEST QUARTER OF SECTION 7, TOWNSHIP 4 NORTH, RANGE 2 EAST, BOISE MERIDIAN, BEING A FOUND A ⅝ INCH REBAR WITH CAP, MARKED PLS 5461, FROM WHICH A FOUND 3 ¼ INCH BRASS CAP MONUMENT MARKING THE WEST QUARTER CORNER OF SAID SECTION 7 BEARS SOUTH 02°13'17" WEST, 2611.35 FEET.

BASIS OF ELEVATION

HORIZONTAL DATUM: NAD83/99, IDAHO STATE PLANE COORDINATES, IDAHO WEST ZONE 1103, ADJUSTED FOR SCALE AND ELEVATION BY A COMBINED FACTOR OF 1.0001832259.

VERTICAL DATUM: NAVD88

UNITS: U.S. SURVEY FEET

CONTROL: N.G.S. STATION "IDTD", PID OH1488
N.G.S. STATION "BOIS A", PID AH9750

PER "SURVEY CONTROL DIAGRAM, HIDDEN HOLLOW LANDFILL" PREPARED BY DAVID S. SHORT, P.L.S. (2009).

SHEET INDEX

SHEET NO.	PAGE	SHEET NAME
C1	1 OF 7	COVER SHEET
C2	2 OF 7	EXISTING CONDITIONS PLAN
C3	3 OF 7	TYPICAL SECTIONS AND LEGEND
C4	4 OF 7	DIMENSIONING PLAN
C5	5 OF 7	GRADING PLAN
C6	6 OF 7	UTILITY PLAN
C7	7 OF 7	SITE CROSS SECTIONS

PRELIMINARY NOT APPROVED FOR CONSTRUCTION

REVISIONS

DATE: MARCH 5, 2012
DESIGNED BY: STAFF
DRAWN BY: STAFF
REVIEWED BY:
PROJECT:
ISSUE:

COPYRIGHT ALL DESIGNS, REPORTS, FIELD DATA, FIELD NOTES, DRAWINGS, PROPOSALS, CALCULATIONS, ESTIMATES, OR ANY REPRESENTATION CONTAINED HEREON ARE THE SOLE PROPERTY OF DYNAMIS ENERGY, LLC UNLESS PREVIOUSLY EXPUNGED BY PRECEDENCE OR AGREEMENT

DYNAMIS ENERGY, LLC
ADA COUNTY LANDFILL WASTE TO ENERGY PLANT
COVER SHEET

COVER SHEET

DYNAMIS ENERGY

C1

SHEET 1 OF 7

V. 10 R. 2

path: C:\0-Scott\Dynamis Landfill\03_Design\ file name:WTE-COVER.dwg | plot date: March 03, 2012 | plotted by: ssanders

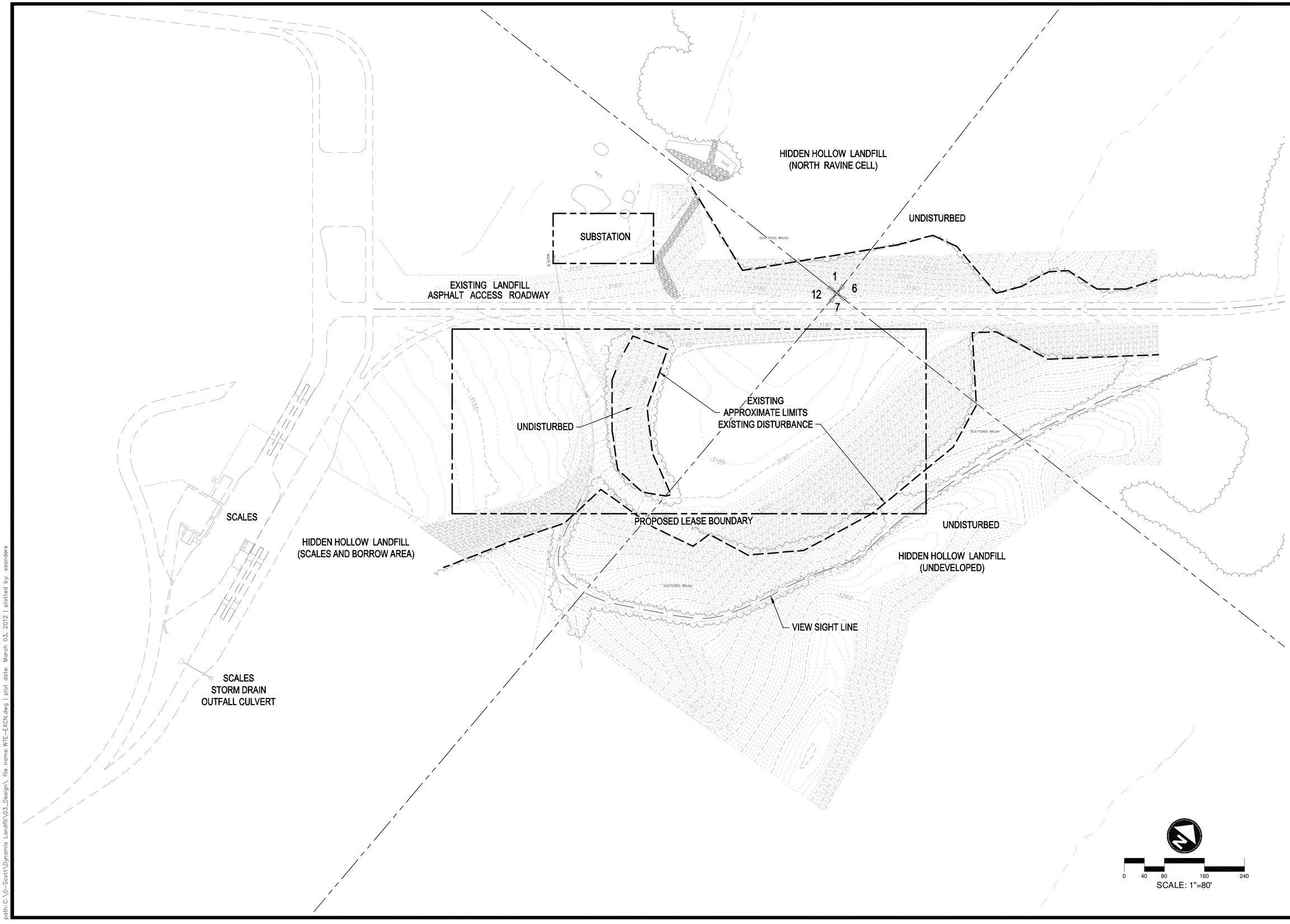

PRELIMINARY NOT APPROVED FOR CONSTRUCTION

REVISIONS

DATE: MARCH 5, 2012
DESIGNED BY: STAFF
DRAWN BY: STAFF
REVIEWED BY:
PROJECT:
ISSUE:

COPYRIGHT ALL DESIGNS, REPORTS, FIELD DATA, FIELD NOTES, DRAWINGS, SPECIFICATIONS, CALCULATIONS, ESTIMATES, OR ANY REPRESENTATION CONTAINED HEREON ARE THE SOLE PROPERTY OF DYNAMIS ENERGY, LLC UNLESS PREVIOUSLY EXPRESSED BY PRECEDENCE OR AGREEMENT

DYNAMIS ENERGY, LLC

HIDDEN HOLLOW LANDFILL WASTE TO ENERGY PLANT
PLAN SHEET

EXISTING CONDITIONS PLAN

DYNAMIS ENERGY

C2

SHEET 2 OF 7

V. 10 R._ 2

path: C:\0-Scott\Dynamis Landfill\03_Design\ file name: WTE-EXCN.dwg | plot date: March 03, 2012 | plotted by: ssanders

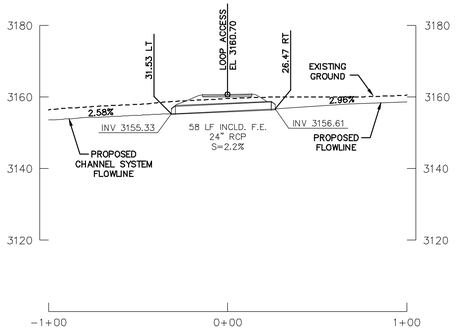

S1/C5 SOUTH LOOP ENTRY STORM CULVERT

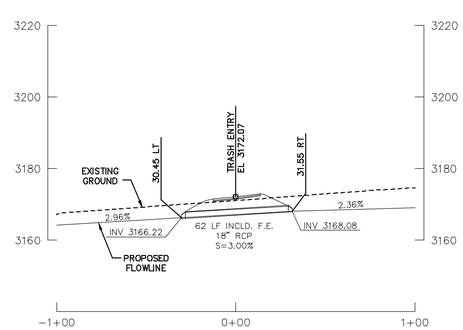

S2/C5 MSW HAULER ENTRY STORM CULVERT

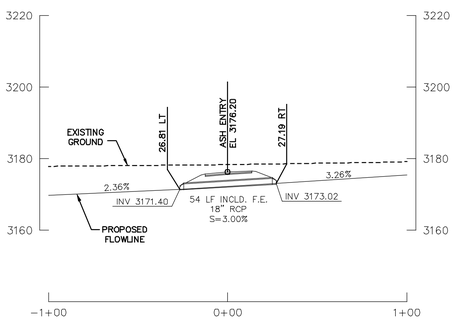

S3/C5 ASH ENTRY STORM CULVERT

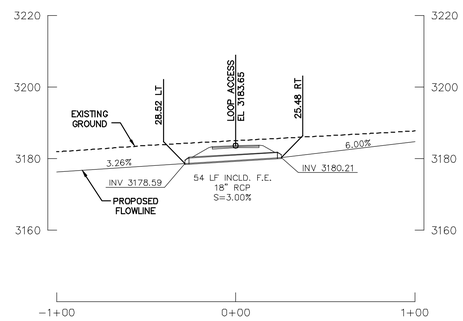

S4/C5 NORTH LOOP ENTRY STORM CULVERT

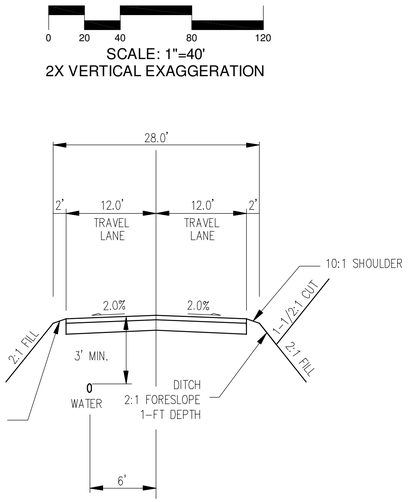

ACCESS LOOP

N.T.S.

IDAHO STANDARDS FOR PUBLIC WORKS CONSTRUCTION
REFERENCED STANDARD DRAWINGS:

SD-506A STANDARD 4" TRAFFICE RATED CLEAN-OUT
SD-603 INLET CATCH BASIN TYPE III
SD-610A CATCH BASIN GRATE TYPE III
SD-611 STANDARD CONCRETE CATCH MANHOLE
SD-615 SHALLOW MANHOLE TYPE I
SD-616 MANHOLE COLLAR
SD-617 STANDARD MANHOLE FRAME, COVER AND RISER
SD-625 PVC DRAIN BASIN STRUCTURE

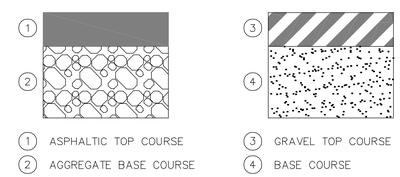

CONSTRUCT PER SITE SPECIFIC GEOTECHNICAL REPORT
PREPARED BY STRATA, INC.

PAVEMENT SECTIONS

N.T.S.

LEGEND

CENTERLINE	PROPOSED CURB AND GUTTER
RIGHT-OF-WAY	PROPOSED SANITARY SEWER
PROPERTY LINE	PROPOSED STORM DRAIN
EASEMENT	PROPOSED RETAINING WALL
EXISTING CURB AND GUTTER	PROPOSED WATER
EXISTING ELECTRICAL	SET NAIL
EXISTING GAS	SET REBAR
EXISTING SANITARY SEWER	SET CHISELED "X"
EXISTING STORM DRAIN	SET MONUMENT
EXISTING TELEPHONE	SET BRASS CAP IN HANDHOLE
EXISTING WATER	HORIZONTAL CONTROL POINT
EXISTING FENCE	PROPOSED MANHOLE
FOUND NAIL	PROPOSED STORM DRAIN
FOUND REBAR	PROPOSED CATCH BASIN WITH WING
FOUND CHISELED "X"	PROPOSED DOUBLE CHECK VALVE
FOUND BRASS CAP	PROPOSED FIRE HYDRANT
FOUND BRASS CAP IN HANDHOLE	PROPOSED WATER METER
EXISTING STREET LIGHT	PROPOSED WATER VALVE
EXISTING POWER POLE	PROPOSED AIR RELEASE VALVE
EXISTING MANHOLE	GRADE BREAK/GRADE CHANGE/PVI
EXISTING CLEANOUT	GRADE BREAK/GRADE CHANGE
EXISTING CATCH BASIN	CONCRETE
EXISTING CATCH BASIN	SAFETY POST
EXISTING DOUBLE CHECK VALVE	
EXISTING FIRE HYDRANT	

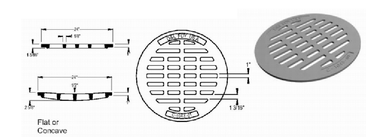

SLOTTED MANHOLE LID

SCALE 1/2"=1'

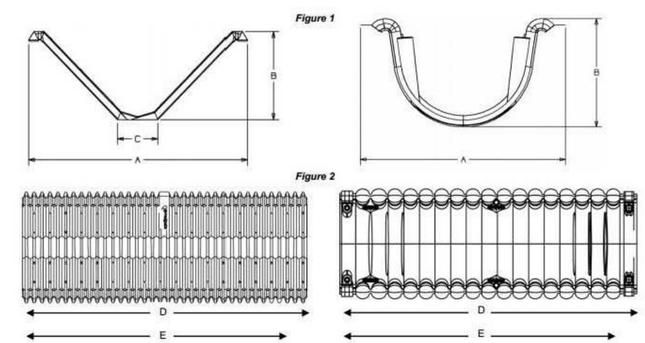

Item Description	Item #	12" Depth Trapezoidal	24" Depth Trapezoidal	24" Depth Semi-Circular
Overall exterior width	A	50.00 in / 1270.00 mm	76.00 in / 1930.40 mm	39.00 in / 990.60 mm
Overall exterior height	B	16.25 in / 412.75 mm	29.50 in / 749.30 mm	19.00 in / 482.60 mm
Bottom channel exterior width	C	10.00 in / 254.00 mm	14.00 in / 355.60 mm	N/A (Rounded Bottom)
Overall exterior length	D	120.00 in / 3048.00 mm	113.00 in / 2870.20 mm	93.00 in / 2362.20 mm
Lay length	E	112.00 in / 2844.80 mm	100.00 in / 2540.00 mm	88.00 in / 2235.20 mm
Weight per part	N/A	52.00 lb / 23.59 kg	89.00 lb / 40.37 kg	36.00 lb / 16.33 kg

Note: measurements above are overall part dimensions and are not representative of actual flow areas or earthen fill area.

"SmartDitch" TRAPEZODIAL HDPE CHANNEL SYSTEM

SCALE 1/2"=1'

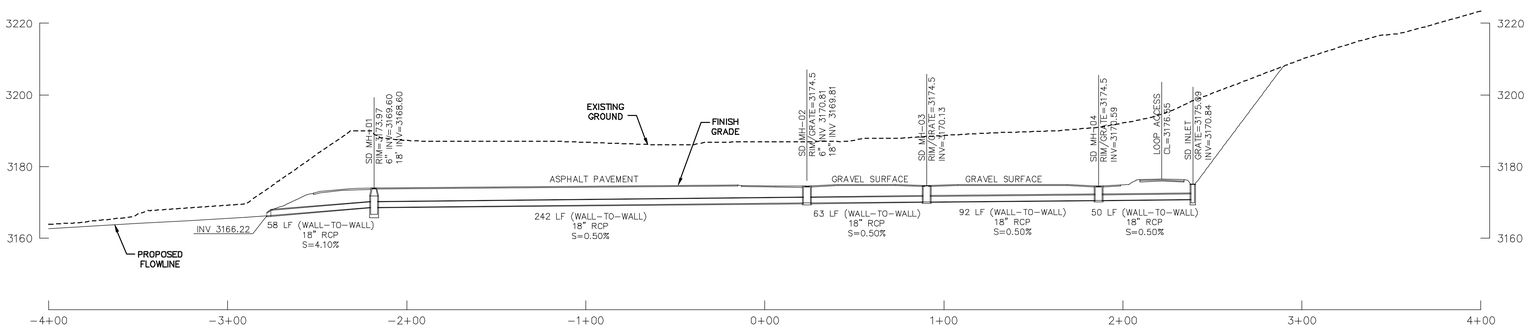

S5/C5 LOOP ROAD OUTFALL STORM CULVERT

PRELIMINARY NOT APPROVED FOR CONSTRUCTION

REVISIONS

DATE: MARCH 5, 2012
DESIGNED BY: STAFF
DRAWN BY: STAFF
REVIEWED BY:
PROJECT:
ISSUE:

COPYRIGHT ALL DESIGNS, REPORTS, FIELD DATA, FIELD NOTES, DRAWINGS, SPECIFICATIONS, ESTIMATES, OR ANY REPRESENTATION CONTAINED HEREON ARE THE SOLE PROPERTY OF DYNAMIS ENERGY, LLC UNLESS PREVIOUSLY EXPUNGED BY PRECEDENCE OR AGREEMENT

DYNAMIS ENERGY, LLC

ADA COUNTY LANDFILL WASTE TO ENERGY PLANT
DETAIL SHEET

TYPICAL SECTIONS AND LEGEND

DYNAMIS ENERGY

C3

SHEET 3 OF 7

V. 10 R. 2

path: C:\0-Scott\Dynamis Landfill\03_Design\ file name: WTE-NOTES.dwg | plot date: March 03, 2012 | plotted by: ssanders

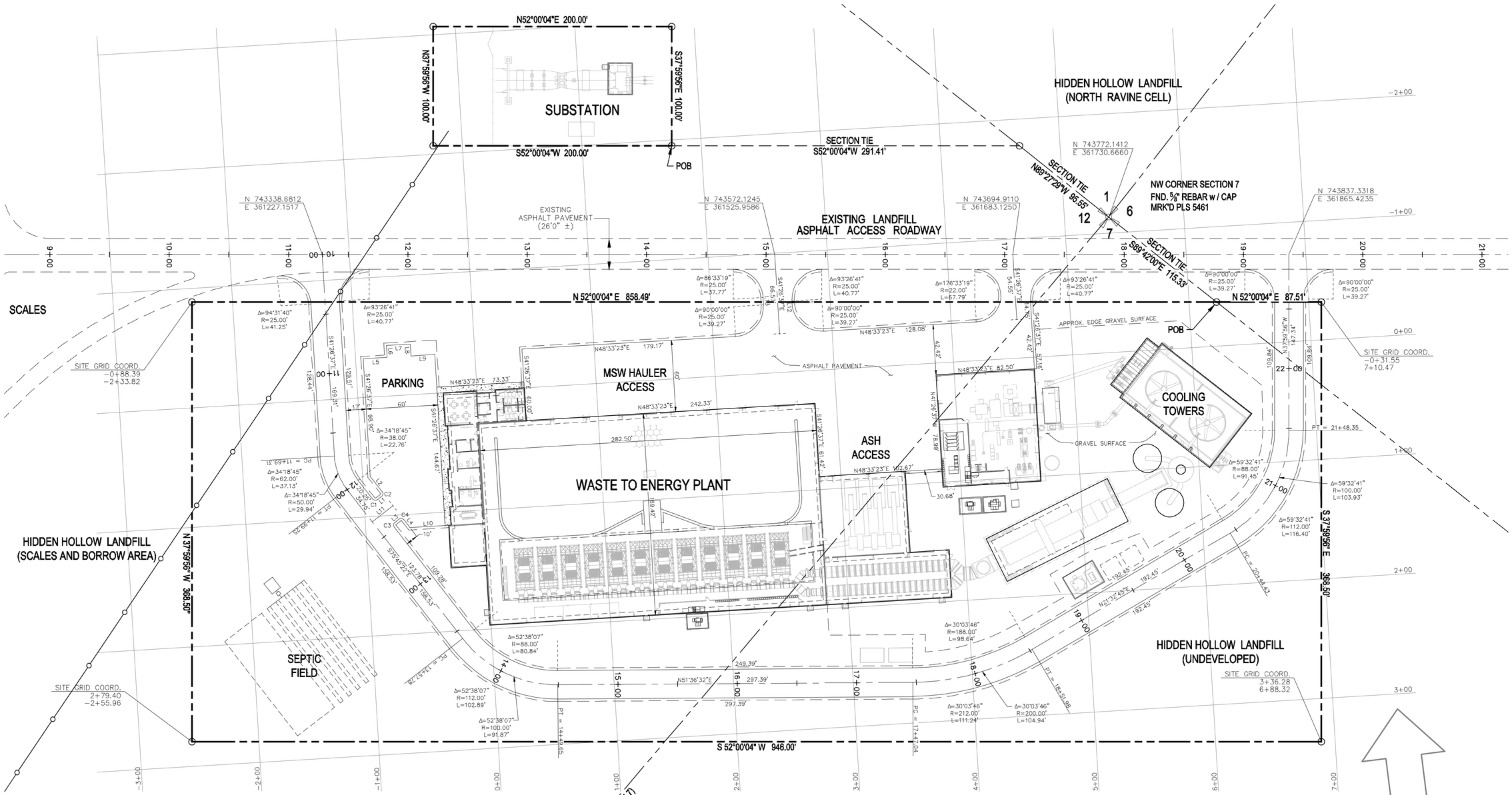

CURVE TABLE			
CURVE	DELTA	RADIUS	LENGTH
C1	Δ=90°00'00"	R=2.50	L=3.93
C2	Δ=90°00'00"	R=2.50	L=3.93
C3	Δ=90°00'00"	R=2.50	L=3.93
C4	Δ=90°00'00"	R=2.50	L=3.93

LINE TABLE		
LINE	LENGTH	BEARING
L1	5.00	N14°14'38"E
L2	16.47	N75°45'22"W
L3	5.00	N14°14'38"E
L4	8.73	N75°45'22"W
L5	20.00	S48°33'23"W
L6	10.00	N41°26'37"W
L7	20.00	S48°33'23"W
L8	10.00	N41°26'37"W
L9	20.00	S48°33'23"W
L10	29.45	S48°33'23"W
L11	22.00	N14°14'38"E
L12	1.74	N41°26'37"W
L13	6.19	N41°26'37"W

DESCRIPTION FOR PROPOSED LEASE TO DYNAMIS ENERGY, LLC

PARCEL 1, WASTE TO ENERGY PLANT
A TRACT OF LAND BEING A PORTION OF HIDDEN HOLLOW SUBDIVISION AS RECORDED IN BOOK 53, PAGES 4782, 4783, 4784, 4786,4787, 4788, 4789 OF THE OFFICIAL RECORDS OF ADA COUNTY, IDAHO, LOCATED IN THE NORTHEAST QUARTER OF THE NORTHEAST QUARTER (NE1/4 NE1/4) OF SECTION 12, TOWNSHIP 4 NORTH, RANGE 1 EAST, BOISE MERIDIAN, AND GOVERNMENT LOT 1 OF SECTION 7 AND GOVERNMENT LOT 7 OF SECTION 6, TOWNSHIP 4 NORTH, RANGE 2 EAST, BOISE MERIDIAN, ADA COUNTY IDAHO, MORE PARTICULARLY DESCRIBED AS FOLLOWS:

COMMENCING AT THE NORTHWEST QUARTER OF SAID SECTION 7, BEING A FOUND 5/8 INCH REBAR WITH CAP, MARKED PLS 5461, FROM WHICH A FOUND 3-1/4 INCH BRASS CAP MONUMENT MARKING THE WEST QUARTER CORNER OF SAID SECTION 7 BEARS SOUTH 02°13'17" WEST (BASIS OF BEARING), 2611.35 FEET; THENCE ALONG THE NORTHERLY LINE OF SAID SECTION 7, SOUTH 89°42'00" EAST, 115.33 FEET TO THE POINT OF BEGINNING;

LEAVING SAID NORTHERLY LINE
THENCE NORTH 52 DEGREES 00 MINUTES 04 SECONDS EAST, A DISTANCE OF 87.51 FEET;
THENCE SOUTH 37 DEGREES 59 MINUTES 56 SECONDS EAST, A DISTANCE OF 368.50 FEET;
THENCE SOUTH 52 DEGREES 00 MINUTES 04 SECONDS WEST, A DISTANCE OF 946.00 FEET;
THENCE NORTH 37 DEGREES 59 MINUTES 56 SECONDS WEST, A DISTANCE OF 368.50 FEET;
THENCE NORTH 52 DEGREES 00 MINUTES 04 SECONDS EAST, A DISTANCE OF 858.49 FEET;
TO THE POINT OF BEGINNING.

CONTAINING 348,602 SQUARE FEET OR 8.00 ACRES MORE OR LESS.

PARCEL 2, SUBSTATION
A TRACT OF LAND BEING A PORTION OF HIDDEN HOLLOW SUBDIVISION AS RECORDED IN BOOK 53, PAGES 4782, 4783, 4784, 4786,4787, 4788, 4789 OF THE OFFICIAL RECORDS OF ADA COUNTY, IDAHO, LOCATED IN THE NORTHEAST QUARTER OF THE NORTHEAST QUARTER (NE1/4 NE1/4) OF SECTION 12, TOWNSHIP 4 NORTH, RANGE 1 EAST, BOISE MERIDIAN, ADA COUNTY IDAHO, MORE PARTICULARLY DESCRIBED AS FOLLOWS:

COMMENCING AT THE NORTHWEST QUARTER OF SAID SECTION 7, BEING A FOUND 5/8 INCH REBAR WITH CAP, MARKED PLS 5461, FROM WHICH A FOUND 3-1/4 INCH BRASS CAP MONUMENT MARKING THE WEST QUARTER CORNER OF SAID SECTION 7 BEARS SOUTH 02°13'17" WEST (BASIS OF BEARING), 2611.35 FEET; THENCE ALONG THE NORTHERLY LINE OF SAID SECTION 12, NORTH 89°27'29" WEST, 95.55 FEET; THENCE LEAVING SAID NORTHERLY LINE, SOUTH 52°00'04" WEST, 291.41 FEET TO THE POINT OF BEGINNING;

THENCE SOUTH 52 DEGREES 00 MINUTES 04 SECONDS WEST, A DISTANCE OF 200.00 FEET;
THENCE NORTH 37 DEGREES 59 MINUTES 56 SECONDS WEST, A DISTANCE OF 100.00 FEET;
THENCE NORTH 52 DEGREES 00 MINUTES 04 SECONDS EAST, A DISTANCE OF 200.00 FEET;
THENCE SOUTH 37 DEGREES 59 MINUTES 56 SECONDS EAST, A DISTANCE OF 100.00 FEET;
TO THE POINT OF BEGINNING.

CONTAINING 20,000 SQUARE FEET OR 0.46 ACRES MORE OR LESS.

0 20 40 80 120
SCALE: 1"=40'

PRELIMINARY NOT APPROVED FOR CONSTRUCTION

REVISIONS	
DATE:	MARCH 5, 2012
DESIGNED BY:	STAFF
DRAWN BY:	STAFF
REVIEWED BY:	
PROJECT:	
ISSUE:	

COPYRIGHT ALL DESIGNS, REPORTS, FIELD DATA, FIELD NOTES, DRAWINGS, SPECIFICATIONS, ESTIMATES, CALCULATIONS, ECONOMICS, OR ANY REPRESENTATION CONTAINED HEREON ARE THE SOLE PROPERTY OF DYNAMIS ENERGY, LLC UNLESS PREVIOUSLY EXPUNGED BY PRECEDENCE OR AGREEMENT

DYNAMIS ENERGY, LLC
ADA COUNTY LANDFILL WASTE TO ENERGY PLANT
PLAN SHEET
DIMENSIONING PLAN

DYNAMIS ENERGY

C4
SHEET 4 OF 7
V. 10 R. 2

path: C:\0-Scott\Dynamis Landfill\03_Design\ file name: WTE-DIMN.dwg | plot date: March 03, 2012 | plotted by: ssanders

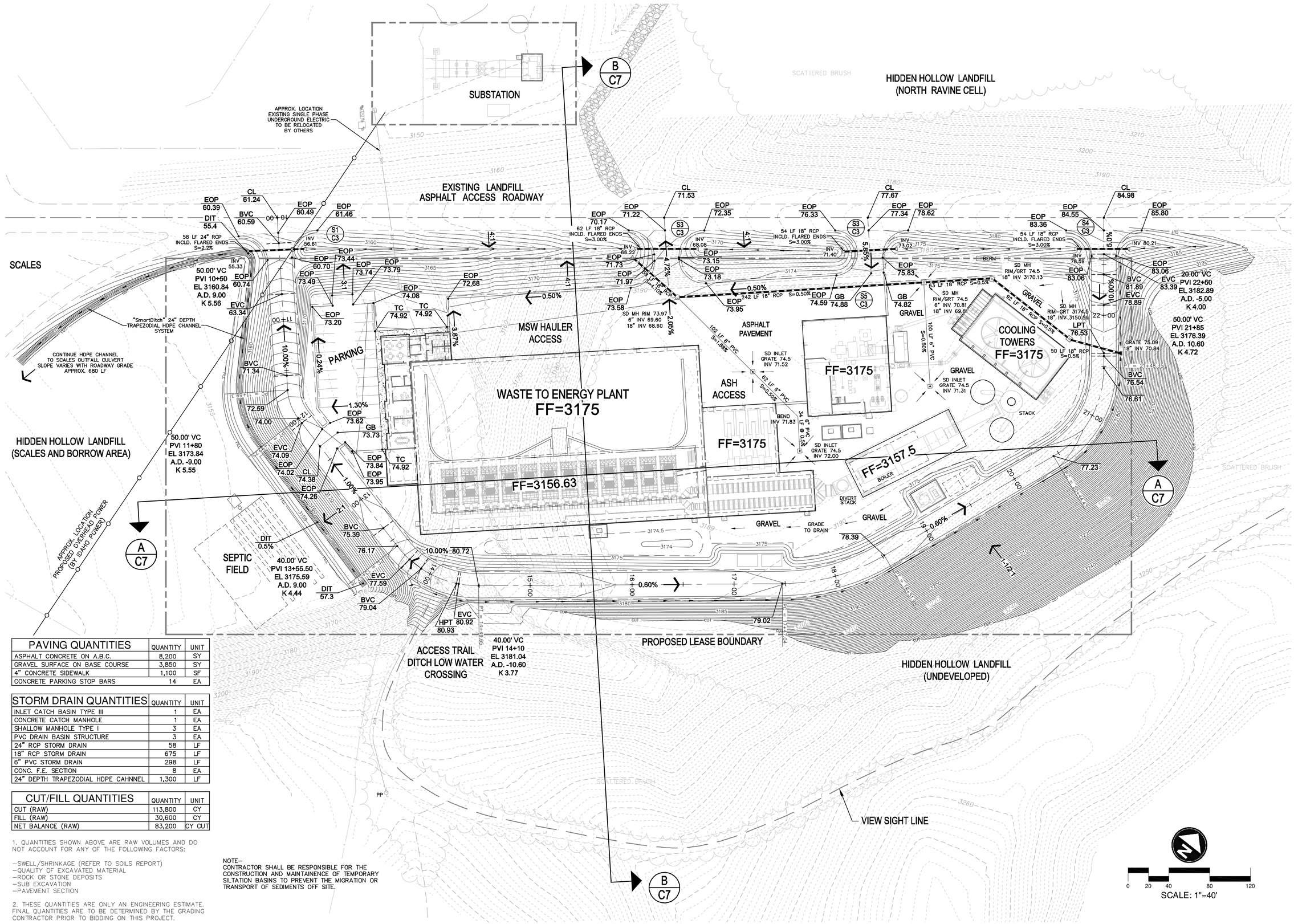

PAVING QUANTITIES	QUANTITY	UNIT
ASPHALT CONCRETE ON A.B.C.	8,200	SY
GRAVEL SURFACE ON BASE COURSE	3,850	SY
4" CONCRETE SIDEWALK	1,100	SF
CONCRETE PARKING STOP BARS	14	EA

STORM DRAIN QUANTITIES	QUANTITY	UNIT
INLET CATCH BASIN TYPE III	1	EA
CONCRETE CATCH MANHOLE	1	EA
SHALLOW MANHOLE TYPE I	3	EA
PVC DRAIN BASIN STRUCTURE	3	EA
24" RCP STORM DRAIN	58	LF
18" RCP STORM DRAIN	675	LF
6" PVC STORM DRAIN	298	LF
CONC. F.E. SECTION	8	EA
24" DEPTH TRAPEZODIAL HDPE CAHNNEL	1,300	LF

CUT/FILL QUANTITIES	QUANTITY	UNIT
CUT (RAW)	113,800	CY
FILL (RAW)	30,600	CY
NET BALANCE (RAW)	83,200	CY CUT

1. QUANTITIES SHOWN ABOVE ARE RAW VOLUMES AND DO NOT ACCOUNT FOR ANY OF THE FOLLOWING FACTORS:

–SWELL/SHRINKAGE (REFER TO SOILS REPORT)
–QUALITY OF EXCAVATED MATERIAL
–ROCK OR STONE DEPOSITS
–SUB EXCAVATION
–PAVEMENT SECTION

2. THESE QUANTITIES ARE ONLY AN ENGINEERING ESTIMATE. FINAL QUANTITIES ARE TO BE DETERMINED BY THE GRADING CONTRACTOR PRIOR TO BIDDING ON THIS PROJECT.

NOTE–
CONTRACTOR SHALL BE RESPONSIBLE FOR THE CONSTRUCTION AND MAINTAINENCE OF TEMPORARY SILTATION BASINS TO PREVENT THE MIGRATION OR TRANSPORT OF SEDIMENTS OFF SITE.

PRELIMINARY NOT APPROVED FOR CONSTRUCTION

REVISIONS

DATE: MARCH 5, 2012
DESIGNED BY: STAFF
DRAWN BY: STAFF
REVIEWED BY:
PROJECT:
ISSUE:

COPYRIGHT ALL DESIGNS, DRAWINGS, FIELD DATA, REPORTS, DRAWINGS, PROPOSALS, CALCULATIONS, ESTIMATES, OR ANY INFORMATION CONTAINED HEREON ARE THE SOLE PROPERTY OF DYNAMIS ENERGY, LLC UNLESS PREVIOUSLY EXCHANGED BY PRECEDENCE OR AGREEMENT

DYNAMIS ENERGY, LLC

HIDDEN HOLLOW LANDFILL WASTE TO ENERGY PLANT
PLAN SHEET

GRADING PLAN

DYNAMIS ENERGY

C5

SHEET 5 OF 7

V. 10 R._2

path: C:\0-Scott\Dynamis Landfill\03_Design\ file name: WTE-GRAD.dwg | plot date: March 03, 2012 | plotted by: ssanders

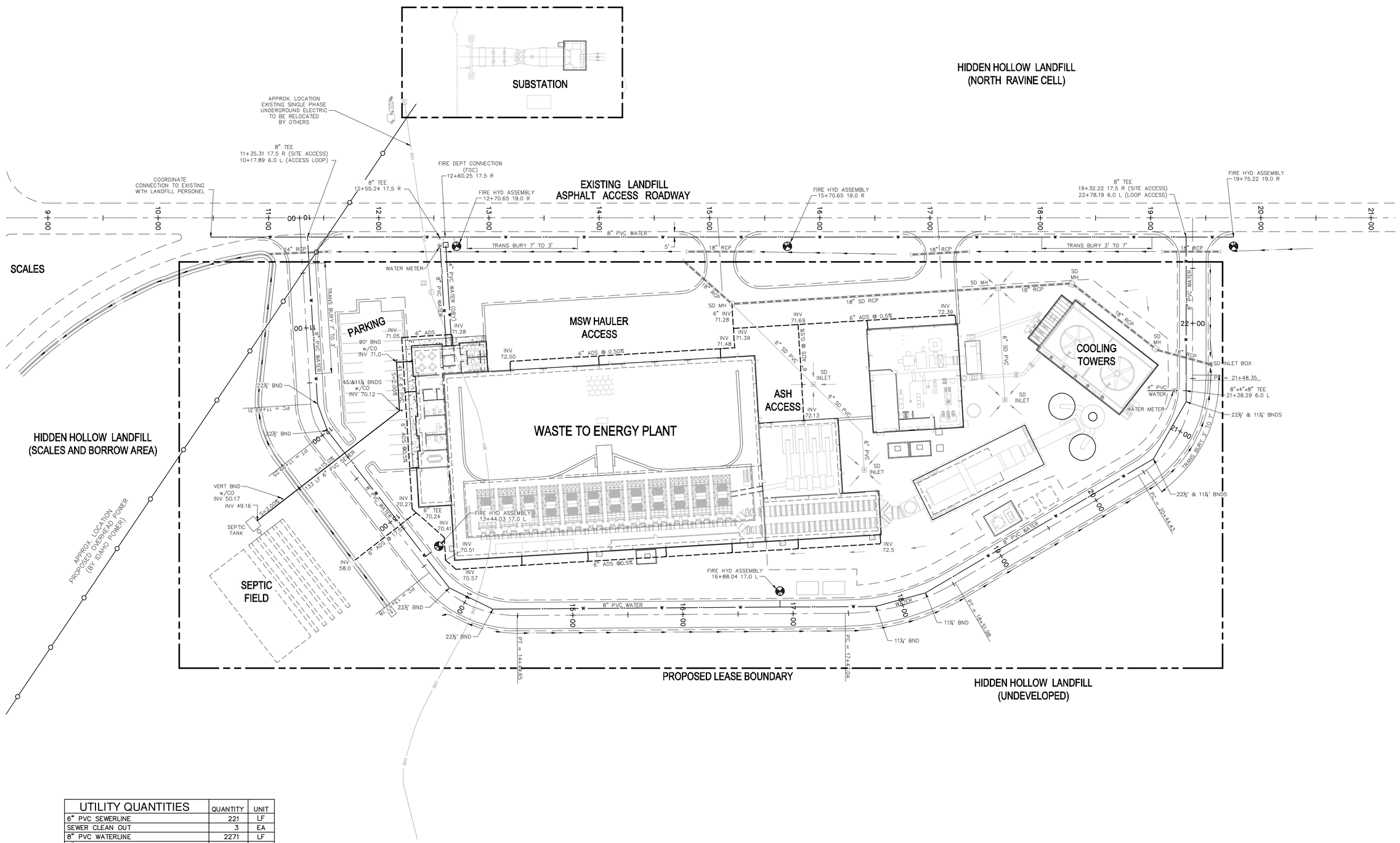

UTILITY QUANTITIES	QUANTITY	UNIT
6" PVC SEWERLINE	221	LF
SEWER CLEAN OUT	3	EA
8" PVC WATERLINE	2271	LF
4" PVC WATERLINE	135	LF
8" GATE VALVE	3	EA
4" GATE VALVE	1	EA
WATER METER	2	EA
FIRE HYDRANT ASSEMBLY	5	EA
FIRE DEPT CONNECTION (FDC)	1	EA
6" ADS ROOF DRAIN	1248	LF
ROOF DRAIN CONNECTION	14	EA

NOTE–COORDINATE ROOF DRAIN CONNECTIONS WITH ARCHITECTURAL PLAN FOR FINAL NUMBER & LOCATION

0 20 40 80 120
SCALE: 1"=40'

PRELIMINARY NOT APPROVED FOR CONSTRUCTION

REVISIONS

DATE: MARCH 5, 2012
DESIGNED BY: STAFF
DRAWN BY: STAFF
REVIEWED BY:
PROJECT:
ISSUE:

COPYRIGHT
ALL DESIGNS, REPORTS, FIELD DATA, FIELD NOTES, DRAWINGS, PROPOSALS, CALCULATIONS, ESTIMATES, OR ANY REPRESENTATION CONTAINED HEREON ARE THE SOLE PROPERTY OF DYNAMIS ENERGY, LLC UNLESS PREVIOUSLY EXCHANGED BY PRECEDENCE OR AGREEMENT

DYNAMIS ENERGY, LLC
ADA COUNTY LANDFILL WASTE TO ENERGY PLANT
PLAN SHEET

UTILITY PLAN

DYNAMIS ENERGY

C6

SHEET 6 OF 7

V. 10 R. 2

path: C:\0-Scott\Dynamis Landfill\03_Design\ file name: WTE-UTIL.dwg | plot date: March 03, 2012 | plotted by: ssanders

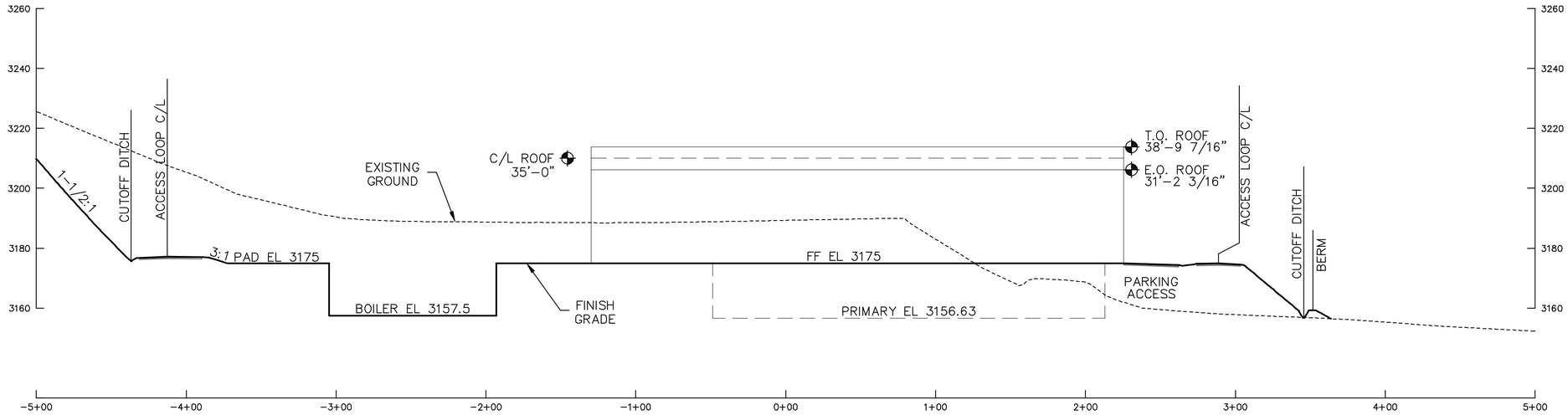

A C5 SITE CROSS SECTION (LOOKING SOUTHEAST)

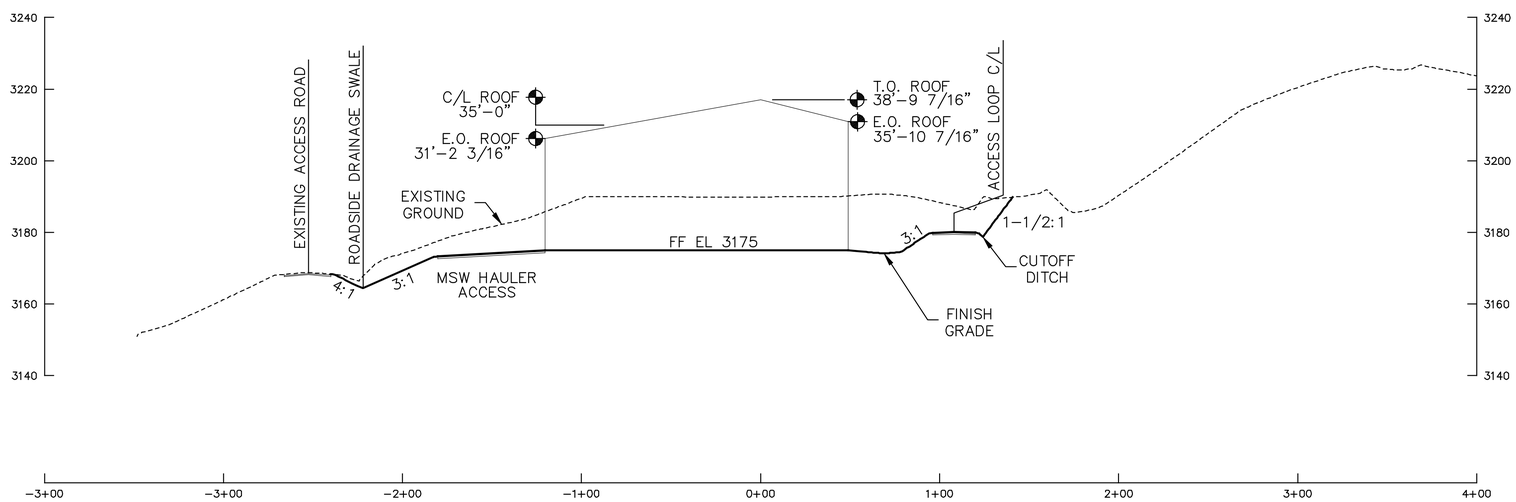

B C5 SITE CROSS SECTION (LOOKING NORTHEAST)

0 20 40 80 120
SCALE: 1"=40'
2X VERTICAL EXAGGERATION

PRELIMINARY NOT APPROVED FOR CONSTRUCTION

REVISIONS

DATE: MARCH 5, 2012
DESIGNED BY: STAFF
DRAWN BY: STAFF
REVIEWED BY:
PROJECT:
ISSUE:

COPYRIGHT ALL DESIGNS, REPORTS, FIELD DATA, FIELD NOTES, DRAWINGS, SPECIFICATIONS, CALCULATIONS, ESTIMATES, OR ANY REPRESENTATION CONTAINED HEREON ARE THE SOLE PROPERTY OF DYNAMIS ENERGY, LLC UNLESS PREVIOUSLY EXPUNGED BY PRECEDENCE OR AGREEMENT

DYNAMIS ENERGY, LLC
ADA COUNTY LANDFILL WASTE TO ENERGY PLANT
SECTION SHEET

SITE CROSS SECTIONS

DYNAMIS ENERGY

C7

SHEET 7 OF 7

V. 10 R. 2

path: C:\0-Scott\Dynamis Landfill\03_Design\ file name: WTE-SECT.dwg | plot date: March 03, 2012 | plotted by: ssanders

APPENDIX B

Scrubber, Ash System Baghouse and Emergency Generator Specifications

DIRECT CONTACT LLC

Main: 2555 – 34th Street NE – Canton, OH – 44705 (330) 437-0444
West Coast: P.O. Box 2969 - Renton, WA - 98056 (425) 235-1723

April 24, 2012

Dynamis Energy, LLC
776 East Riverside Drive
Suite 150
Eagle, Idaho 833616

Attention: Chris Durand, Project Manager

Reference: MSW to Energy - ADA, County

Subject: Heat Recovery and Pollutant Abatement System
DCI-HTR Scrubbing Heat Recovery System
Revision A

Dear Chris,

We have completed the design of our subject system, and have determined the expect abatement results. These results are based on "Peak Load" Production:

Peak Load Production:
Incoming Flue Gas Mass Flow:

Non-Reactive/Non-Condensable	491,502-lb/hr
Water Vapor	50,756-lb/hr
Sulfur Dioxide Gas	40-lb/hr
Hydrochloric Acid Vapor	10-lb/hr
PM_{10}	7-lb/hr
$PM_{2.5}$ & smaller	6.5-lb/hr
Fahrenheit Temperature	350°F
Absolute Pressure	12.88-Psia

Given the above conditions, design liquid irrigation rates and contact solution pH, and 31-million BTU/hr rate of heat recovery, Direct Contact LLC expects to reduce the exiting gas at the following rates:

Component	*Incoming*	*Removal*
Sulfur Dioxide Gas	40-lb/hr	71.25%
Hydrochloric Acid Vapor	10-lb/hr	94.05%
PM_{10}	7-lb/hr	99.00%
$PM_{2.5}$ & smaller	6.5-lb/hr	41.00%

Direct Contact LLC will conditionally guarantee the above removal rates at Peak Load Production or lower rate.

Expected removal rates will change based on and relative to the incoming conditions:

> If heat recovery rate decreases at a constant mass flow rate, then the expected particulate recovery efficiency will improve slightly, but the acid gases removal efficiency will decrease slightly.
>
> If flue gas mass flow rate is reduced, then the acid gases capture efficiency will increase slightly, but the particulate capture efficiency will decrease slightly.
>
> If the solution in contact with the flue gas has its pH raised then the acid gas capture efficiency will increase conversely if the pH drops the acid gas capture rate will decrease.
>
> As the moisture content of gas entering the DCLLC 'Hydro Thermal Recovery' vessel increases, the PM2.5 particulate removal will increase.

Per our ongoing discussion, I trust that this will clearly state what removal rates we can expect to provide for your 'Peak Load Conditions.' Please contact me with any questions you have on these numbers or any of the above.

Direct Contact LLC appreciates the opportunity to assist Dynamis Energy on your Heat Recovery and Pollution Abatement System.

Thank you for your continued consideration.

With *Warmest* Regards,

Bill Carson

CHIEF ENGINEER

Direct Contact LLC

Waste Heat Recovery... adding up to much more than a drop in the bucket!

(425) 235-1723 **x101** // **cell** (206) 295-7678// fax (425) 277-5780

Energy-Efficiency-Environment

DIESEL GENERATOR SET

CATERPILLAR®

Image shown may not reflect actual package.

STANDBY

300 ekW 375 kVA
60 Hz 1800 rpm 480 Volts

Caterpillar is leading the power generation marketplace with Power Solutions engineered to deliver unmatched flexibility, expandability, reliability, and cost-effectiveness.

FEATURES

FUEL/EMISSIONS STRATEGY
- EPA Certified for Stationary Emergency Application (EPA Tier 3 emissions levels)

DESIGN CRITERIA
- The generator set accepts 100% rated load in one step per NFPA 110 and meets ISO 8528-5 transient response.

UL 2200
- UL 2200 listed packages available. Certain restrictions may apply. Consult with your Cat® Dealer.

FULL RANGE OF ATTACHMENTS
- Wide range of bolt-on system expansion attachments, factory designed and tested
- Flexible packaging options for easy and cost effective installation

SINGLE-SOURCE SUPPLIER
- Fully prototype tested with certified torsional vibration analysis available

WORLDWIDE PRODUCT SUPPORT
- Cat dealers provide extensive post sale support including maintenance and repair agreements
- Cat dealers have over 1,800 dealer branch stores operating in 200 countries
- The Cat® S•O•S℠ program cost effectively detects internal engine component condition, even the presence of unwanted fluids and combustion by-products

CAT® C9 ATAAC DIESEL ENGINE
- Utilizes ACERT™ Technology
- Reliable, rugged, durable design
- Field-proven in thousands of applications worldwide
- Four-stroke diesel engine combines consistent performance and excellent fuel economy with minimum weight
- ADEM™A4 electronic engine control

CAT GENERATOR
- Matched to the performance and output characteristics of Cat engines
- Load adjustment module provides engine relief upon load impact and improves load acceptance and recovery time
- UL 1446 Recognized Class H insulation

CAT EMCP 3 SERIES CONTROL PANELS
- Simple user friendly interface and navigation
- Scalable system to meet a wide range of customer needs
- Integrated Control System and Communications Gateway

FACTORY INSTALLED STANDARD & OPTIONAL EQUIPMENT

System	Standard	Optional
Air Inlet	• Light Duty Air filter • Service indicator	[ ] Single element air filter [ ] Dual element air filter [ ] Heavy-duty dual element air filter with precleaner [ ] Air inlet shut-off
Cooling	• Radiator package mounted • Coolant level sight gauge • Coolant drain line with valve • Fan and belt guards • Cat® Extended Life Coolant	[ ] Radiator duct flange [ ] Low coolant level sensor
Exhaust	• Dry exhaust manifold • Exhaust flange outlet	[ ] Industrial [ ] Residential [ ] Critical Mufflers [ ] Stainless steel exhaust flex fittings with split-cuff [ ] Manifold and turbocharger guards [ ] Elbows and through-wall kits
Fuel	• Primary fuel filter with integral water separator • Secondary fuel filters • Fuel priming pump • Engine fuel transfer pump • Fuel cooler	[ ] Integral dual wall UL listed fuel tank bases [ ] Sub-base dual wall UL listed fuel tank base [ ] Manual transfer pump [ ] Fuel level switch [ ] Flexible fuel lines
Generator	• Class H insulation • Class H temperature Rise • VR6 voltage regulator with 3-phase sensing with load adjustment module • IP23 Protection • Power cable termination box (NEMA mech lug holes)	[ ] Oversize generators [ ] Digital voltage regulator with kVAR/PF control [ ] Anti-condensation space heaters [ ] Coastal Protection (CIP) [ ] Permanent magnet excitor (PMG) [ ] Internal excited (IE) [ ] Reactive droop
Power Termination	• Power center houses EMCP controller and control terminations (rear mounted) • Segregated low voltage wiring termination panel • Bottom cable entry • IP22 Protection	[ ] Power center mounting option (right side) [ ] Circuit breakers, UL listed, 3 pole (80% & 100%) [ ] Circuit breakers, IEC compliant, 3-4 pole (100%) [ ] Power terminal strips (NEMA or IEC mechanical lug holes) [ ] Multiple circuit breakers [ ] Shunt trip [ ] Auxiliary contacts
Governor	• ADEM™A4	[ ] Load share module
Control Panel	• EMCP 3.1 (mounted in power center) • Speed adjust • Voltage adjustment • Emergency stop pushbutton	[ ] EMCP 3.2 or [ ] EMCP 3.3 [ ] Right-hand mounted power center [ ] Local annunciator module (NFPA 99/110) [ ] Remote annunicator module (NFPA 99/110) [ ] Discrete I/O module
Lube	• Lubricating oil and filter • Oil drain line with valves • Fumes disposal • Lube oil level indicator • Oil cooler	[ ] Oil temperature sensor [ ] Manual sump pump
Mounting	• Formed steel wide base frame • Linear vibration isolation-seismic zone 4	[ ] Oil skid base [ ] Formed steel wide base frame
Starting/Charging	• 24 volt starting motor • 24 volt, 45 amp charging alternator	[ ] Jacket water heater with shut off valves [ ] Block heater [ ] Ether starting aid [ ] Battery disconnect switch [ ] Battery charger (5 or 10 amp) [ ] Oversize batteries [ ] Batteries with rack and cables
General	• Paint - Caterpillar yellow except rails and radiators gloss black • Flywheel housing - SAE No.1	[ ] UL 2200 package [ ] CSA Certification [ ] Weather protective enclosure [ ] Sound attenuated protective enclosure

STANDBY 300 ekW 375 kVA

60 Hz 1800 rpm 480 Volts

CATERPILLAR®

SPECIFICATIONS

CAT GENERATOR

Frame size.....LC5014J
Excitation.....Self Excited
Pitch.....0.6667
Number of poles.....4
Number of bearings..... 1
Number of leads.....012
Insulation..... UL 1446 Recognized Class H with tropicalization and antiabrasion
- Consult your Caterpillar dealer for available voltages
IP rating.....IP23
Alignment.....Pilot Shaft
Overspeed capability..... 125% of rated
Wave form deviation (Line to Line)..... 2%
Voltage regulator.....Three phase sensing
Voltage Regulation.. Less than +/- 1/2% (steady state)Less than +/- 1% (no load to full load)
Telephone Influence Factor..... Less than 50
Harmonic distortion..... Less than 5%

CAT DIESEL ENGINE

C9 ATAAC, I-6, 4-stroke-cycle watercooled diesel
Bore - mm..... 112.00 mm (4.41 in)
Stroke - mm..... 149.00 mm (5.87 in)
Displacement - L..... 8.80 L (537.01 in^3)
Compression ratio..... 16.1:1
Aspiration..... Turbocharged Air-to-Air Aftercooled
Fuel system..... HEUI
Governor type..... Caterpillar ADEM control system

CAT EMCP 3 SERIES CONTROLS

- EMCP 3.1 (Standard)
- EMCP 3.2 / EMCP 3.3 (Option)
- Single location customer connector point
- True RMS metering, 3-phase
- Controls
  - Run / Auto / Stop control
  - Speed Adjust
  - Voltage Adjust
  - Emergency Stop Pushbutton
  - Engine cycle crank
- Digital Indication for:
  - RPM
  - Operating hours
  - Oil Pressure
  - Coolant temperature
  - System DC volts
  - L-L volts, L-N volts, phase amps, Hz
  - ekW, kVA, kVAR,kW-hr, %kW, PF (EMCP 3.2 / 3.3)
- Shutdowns with common indicating light for:
  - Low oil pressure
  - High coolant temperature
  - Low coolant level
  - Overspeed
  - Emergency stop
  - Failure to start (overcrank)
- Programmable protective relaying functions: (EMCP 3.2 & 3.3)
  - Under and over voltage
  - Under and over frequency
  - Overcurrent (time and inverse time)
  - Reverse power (EMCP 3.3)
- MODUS isolated data link (RS-485 half-duplex EMCP 3.2 & 3.3)
- Options
  - Vandal door
  - Local annunciator module
  - Remote annunciator module
  - Input / Output module
  - RTD / Thermocouple Modules
  - Monitoring software

TECHNICAL DATA

Open Generator Set - - 1800 rpm/60 Hz/480 Volts	DM8168	
Tier 3		
Generator Set Package Performance		
Genset Power rating @ 0.8 pf	375 kVA	
Genset Power rating with fan	300 ekW	
Coolant to aftercooler		
Coolant to aftercooler temp max	49 ° C	120 ° F
Fuel Consumption		
100% load with fan	86.1 L/hr	22.7 Gal/hr
75% load with fan	66.7 L/hr	17.6 Gal/hr
50% load with fan	51.3 L/hr	13.6 Gal/hr
Cooling System[1]		
Air flow restriction (system)	0.12 kPa	0.48 in. water
Air flow (max @ rated speed for radiator arrangement)	497 m^3/min	17551 cfm
Engine Coolant capacity with radiator/exp. tank	36.0 L	9.5 gal
Engine coolant capacity	22.0 L	5.8 gal
Radiator coolant capacity	14.0 L	3.7 gal
Inlet Air		
Combustion air inlet flow rate	25.7 m^3/min	907.6 cfm
Exhaust System		
Exhaust stack gas temperature	499.5 ° C	931.1 ° F
Exhaust gas flow rate	69.7 m^3/min	2461.4 cfm
Exhaust flange size (internal diameter)	170 mm	7 in
Exhaust system backpressure (maximum allowable)	5.9 kPa	23.7 in. water
Heat Rejection		
Heat rejection to coolant (total)	121 kW	6881 Btu/min
Heat rejection to exhaust (total)	309 kW	17573 Btu/min
Heat rejection to aftercooler	89 kW	5061 Btu/min
Heat rejection to atmosphere from engine	43 kW	2445 Btu/min
Heat rejection to atmosphere from generator	21.9 kW	1245.5 Btu/min
Alternator[2]		
Motor starting capability @ 30% voltage dip	682 skVA	
Frame	LC5014J	
Temperature Rise	150 ° C	270 ° F
Lube System		
Sump refill with filter	39.0 L	10.3 gal
Emissions (Nominal)[3]		
NOx g/hp-hr	4.11 g/hp-hr	
CO g/hp-hr	.25 g/hp-hr	
HC g/hp-hr	.06 g/hp-hr	
PM g/hp-hr	.033 g/hp-hr	

[1] For ambient and altitude capabilities consult your Cat dealer. Air flow restriction (system) is added to existing restriction from factory.
[2] Generator temperature rise is based on a 40° C (104° F) ambient per NEMA MG1-32.
[3] Emissions data measurement procedures are consistent with those described in EPA CFR 40 Part 89, Subpart D & E and ISO8178-1 for measuring HC, CO, PM, NOx. Data shown is based on steady state operating conditions of 77°F, 28.42 in HG and number 2 diesel fuel with 35° API and LHV of 18,390 btu/lb. The nominal emissions data shown is subject to instrumentation, measurement, facility and engine to engine variations. Emissions data is based on 100% load and thus cannot be used to compare to EPA regulations which use values based on a weighted cycle.

RATING DEFINITIONS AND CONDITIONS

Meets or Exceeds International Specifications: AS1359, CSA, IEC60034-1, ISO3046, ISO8528, NEMA MG 1-22, NEMA MG 1-33, UL508A, 72/23/EEC, 98/37/EC, 2004/108/EC

Standby - Output available with varying load for the duration of the interruption of the normal source power. Average power output is 70% of the standby power rating. Typical operation is 200 hours per year, with maximum expected usage of 500 hours per year. Standby power in accordance with ISO8528. Fuel stop power in accordance with ISO3046. Standby ambients shown indicate ambient temperature at 100% load which results in a coolant top tank temperature just below the shutdown temperature.

Ratings are based on SAE J1349 standard conditions. These ratings also apply at ISO3046 standard conditions. **Fuel rates** are based on fuel oil of 35° API [16° C (60° F)] gravity having an LHV of 42 780 kJ/kg (18,390 Btu/lb) when used at 29° C (85° F) and weighing 838.9 g/liter (7.001 lbs/U.S. gal.). Additional ratings may be available for specific customer requirements, contact your Cat representative for details. For information regarding Low Sulfur fuel and Biodiesel capability, please consult your Cat dealer.

DIMENSIONS

Package Dimensions		
Length	**3132.0 mm**	**123.31 in**
Width	**1110.0 mm**	**43.7 in**
Height	**1844.5 mm**	**72.62 in**
Weight	**2307 kg**	**5,086 lb**

NOTE: For reference only - do not use for installation design. Please contact your local dealer for exact weight and dimensions. (General Dimension Drawing #2778059).

© 2010 Caterpillar
All rights reserved.

Materials and specifications are subject to change without notice. The International System of Units (SI) is used in this publication.

CAT, CATERPILLAR, SAFETY.CAT.COM their respective logos, "Caterpillar Yellow," and the POWER EDGE trade dress, as well as corporate and product identity used herein, are trademarks of Caterpillar and may not be used without permission.

GEN SET PACKAGE PERFORMANCE DATA

JANUARY 10, 2011

For Help Desk Phone Numbers Click here

Performance Number: DM8168

Change Level: 02

Sales Model: C9 DITA
Combustion: DI
Aspr: TA
Engine Power:
300 W/F EKW 319 W/O F EKW
480 HP
Speed: 1,800 RPM
After Cooler: ATAAC
Manifold Type: DRY
Governor Type: ELEC
After Cooler Temp(F): 120
Turbo Quantity: 1
Engine App: GP
Turbo Arrangement:
Hertz: 60
Application Type: PACKAGE-DIE
Engine Rating: PGS
Strategy:
Rating Type: STANDBY
Certification: EPA TIER-3 2005 - ----
EPA STAT EMERC 2011 - ----

General Performance Data 1

GEN W/F EKW	PERCENT LOAD	ENGINE POWER BHP	ENGINE BMEP PSI	FUEL BSFC LB/BHP-HR	FUEL RATE GPH	INTAKE MFLD TEMP DEG F	INTAKE MFLD P IN-HG	INTAKE AIR FLOW CFM	EXH MFLD TEMP DEG F	EXH STACK TEMP DEG F	EXH GAS FLOW CFM
300	100	480	392.91	0.33	22.75	122.72	82.71	911.12	1,252.4	931.1	2,461.43
270	90	430	352.3	0.33	20.5	121.1	78.86	889.93	1,182.74	879.8	2,302.52
240	80	384	314.01	0.34	18.54	121.46	75.07	861.68	1,123.16	841.82	2,168.32
225	75	361	295.45	0.34	17.62	121.64	73.12	847.55	1,096.7	827.06	2,104.76
210	70	339	277.32	0.35	16.8	121.64	71.13	833.43	1,074.56	818.06	2,044.72
180	60	296	242.07	0.36	15.16	121.64	66.57	801.64	1,031.36	801.14	1,924.65
150	50	253	207.55	0.37	13.55	121.64	61.21	759.27	989.24	784.94	1,808.11
120	40	213	173.9	0.39	11.81	121.64	53.1	692.17	947.48	769.28	1,645.67
90	30	170	139.53	0.4	9.8	121.64	42.73	603.88	901.58	753.44	1,423.18
75	25	149	121.83	0.41	8.74	121.64	36.96	557.97	876.92	745.34	1,296.05
60	20	127	103.99	0.42	7.61	121.64	30.77	505	851	737.06	1,158.32
30	10	82	67.44	0.44	5.2	121.46	17.74	391.99	721.58	649.4	844.02

General Performance Data 2

GEN W/F EKW	PERCENT LOAD	ENGINE POWER BHP	COMPRESS OUT PRESS IN-HG	COMPRESS OUT TEMP DEG F
300	100	480	83.63	452.48
270	90	430	79.87	429.08
240	80	384	76.08	407.3
225	75	361	74.15	397.04
210	70	339	72.2	387.5
180	60	296	67.58	368.96
150	50	253	62.16	350.78
120	40	213	53.96	322.88
90	30	170	43.5	283.64
75	25	149	37.67	260.6
60	20	127	31.45	235.22

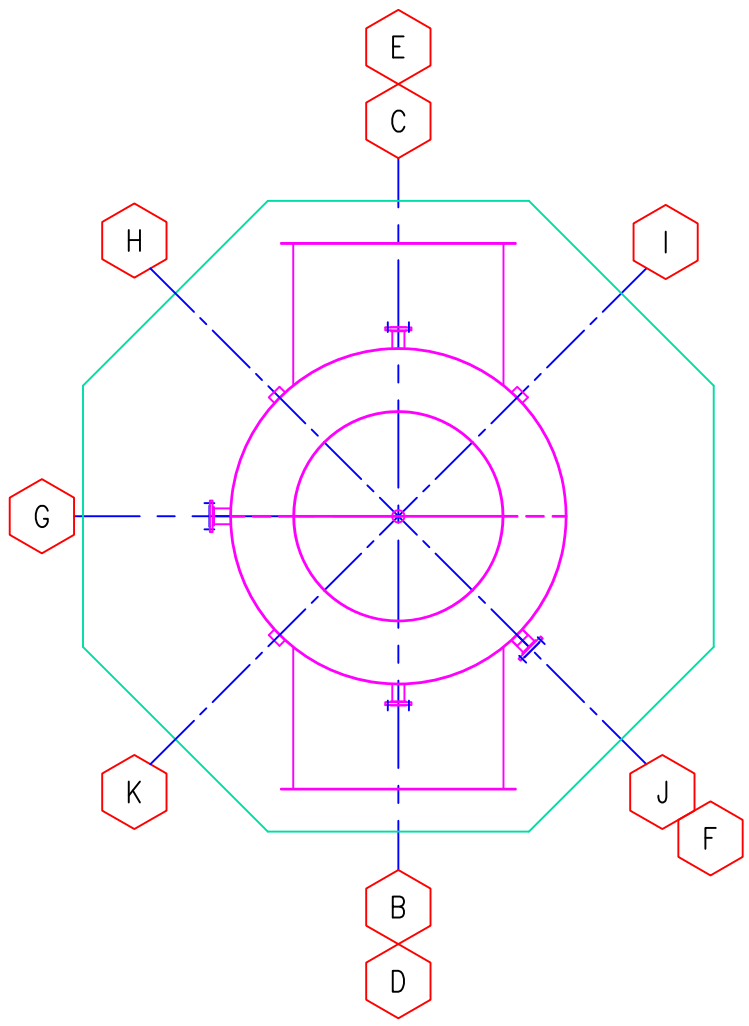
E
C
H
I
G
K
J
F
B
D

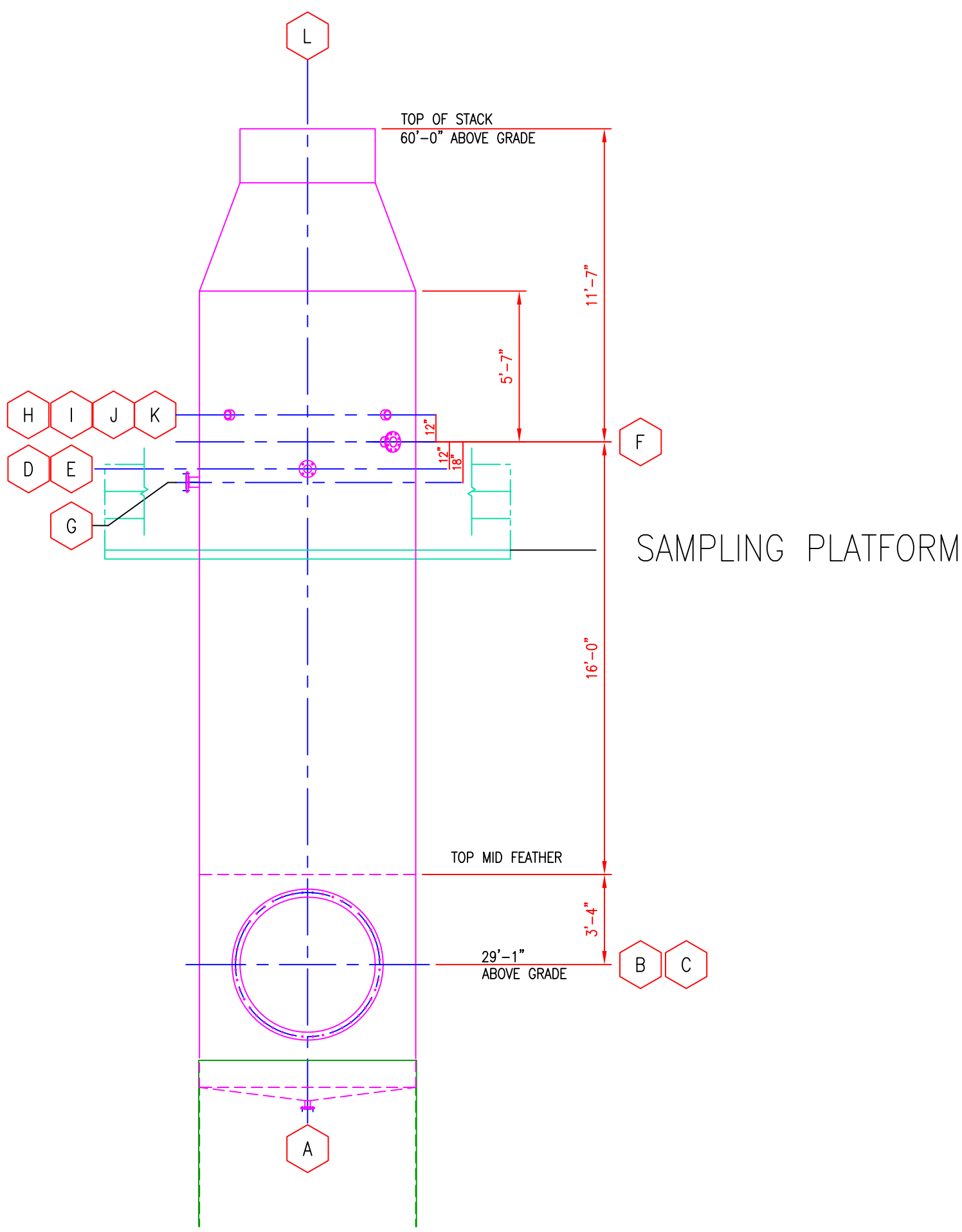
L
TOP OF STACK
60'-0" ABOVE GRADE
11'-7"
5'-7"
H
I
J
K
12"
12"
18"
F
D
E
G
SAMPLING PLATFORM
16'-0"
TOP MID FEATHER
3'-4"
29'-1"
ABOVE GRADE
B
C
A

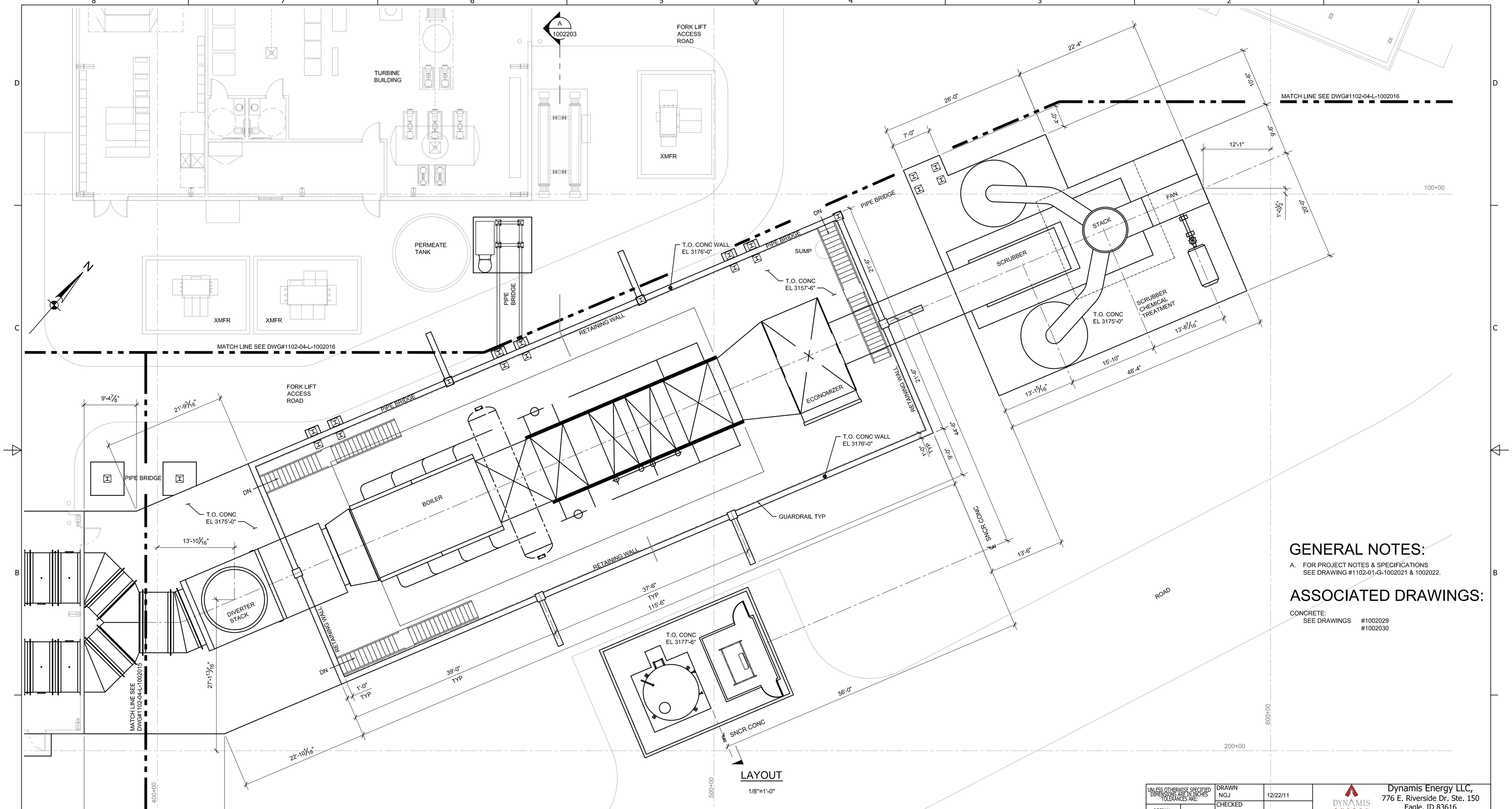

LAYOUT

1/8"=1'-0"

GENERAL NOTES:

A. FOR PROJECT NOTES & SPECIFICATIONS SEE DRAWING #1102-01-G-1002021 & 1002022.

ASSOCIATED DRAWINGS:

CONCRETE:
SEE DRAWINGS #1002029
#1002030

NO.	REVISIONS	BY	DATE
C	ISSUED FOR NOT TO EXCEED BUDGET	BEH	3/29/12
B	WAS DWG #1102-01-L-1002017	BEH	2/23/12
A	FOR REFERENCE ONLY	NGJ	12/29/11

ADA COUNTY, IDAHO

EVERGREEN ENGINEERING
Engineering and Construction Services
EUGENE, OREGON
(541) 484-4771 FAX: (541) 484-6759
www.evergreenengineering.com

EE JOB NUMBER 2540.1
CKD:
APP: JP
EE DRAWING NUMBER: 1102-04-L-1002017
CAD FILE: 1102-04-L-1002017.dwg

UNLESS OTHERWISE SPECIFIED DIMENSIONS ARE IN INCHES TOLERANCES ARE:

DECIMAL		WELD ± 1/32
X	±.1	CHAMFERS ±5°
XX	±.02	ANGLES ±1°
XXX	±.005	CAST ±1/8
FRACTIONS	±1/16	

THIRD ANGLE PROJECTION

DRAWN NGJ	12/22/11	
CHECKED		
QA		
MFG		
APPROVED JP		
MATERIAL SEE TABLE	FINISH N/A	

Dynamis Energy LLC,
776 E. Riverside Dr. Ste. 150
Eagle, ID 83616

TITLE
408T WASTE TO ENERGY FACILITY
BOILER/ BAGHOUSE/ FAN/ STACK
LAYOUT

SIZE	DWG NO	REV
D	1102-04-L-1002017	C

SCALE: 1/8"=1'-0" SHEET 1 OF 1

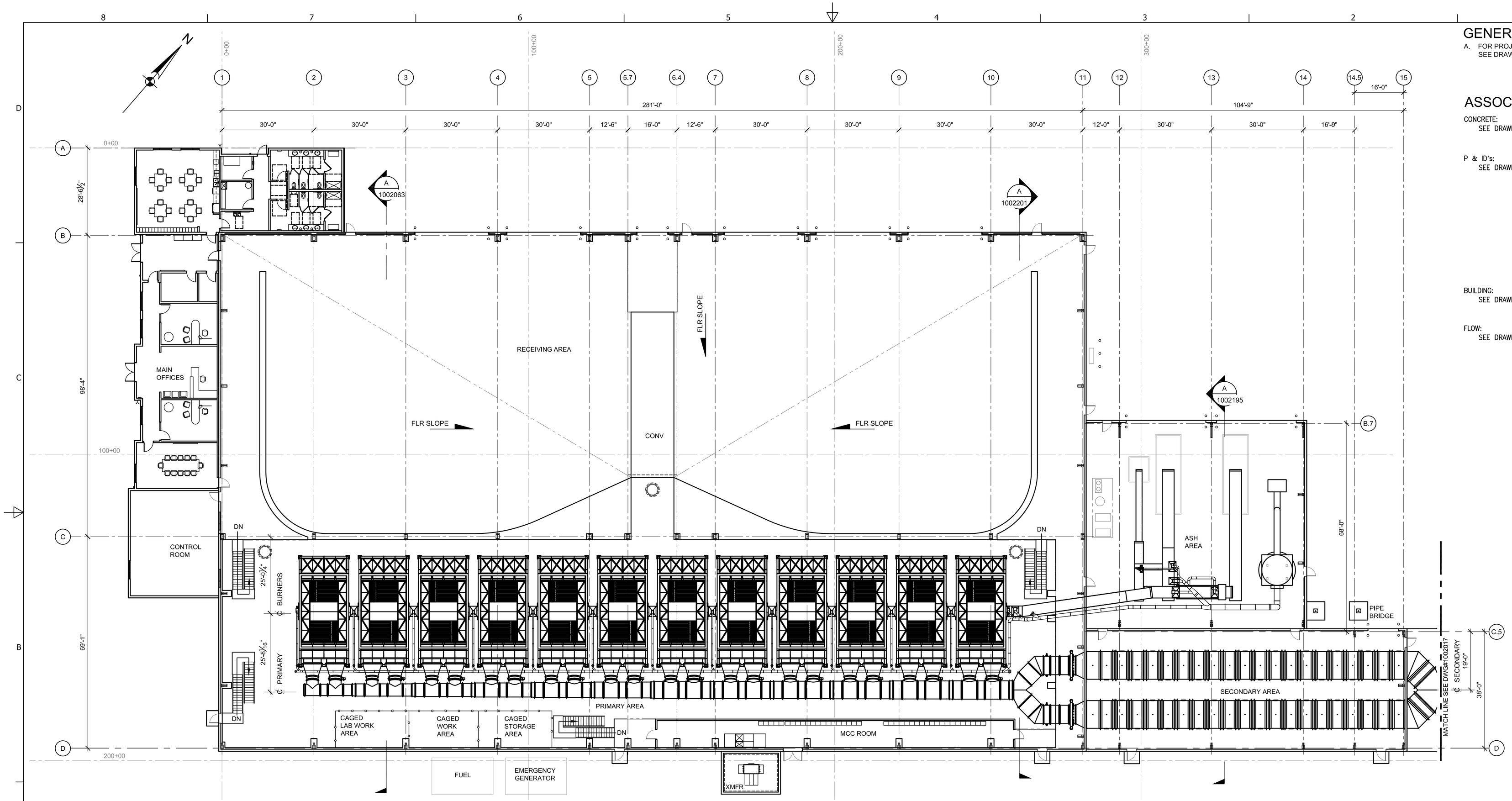

LAYOUT

1/16"=1'-0"

GENERAL NOTES:

A. FOR PROJECT NOTES & SPECIFICATIONS SEE DRAWING #1102-01-G-1002021 & 1002022.

ASSOCIATED DRAWINGS:

CONCRETE:
SEE DRAWINGS #1002024
#1002025

P & ID's:
SEE DRAWINGS #1002001
#1002002
#1002003
#1002004
#1002005
#1002006
#1002007
#1002008
#1002010
#1002011
#1002012
#1002013

BUILDING:
SEE DRAWINGS #1002063
#1002195
#1002205

FLOW:
SEE DRAWINGS #1002000

NO.	REVISIONS	BY	DATE
C	ISSUED FOR NOT TO EXCEED BUDGET	BEH	3/29/12
B	WAS DWG #1102-01-L-1002015	BEH	2/23/12
A	FOR REFERENCE ONLY	NGJ	12/29/11

ADA COUNTY, IDAHO

EVERGREEN ENGINEERING
Engineering and Construction Services
EUGENE, OREGON
(541) 484-4771 FAX: (541) 484-6759
www.evergreenengineering.com

EE JOB NUMBER 2540.1
CKD:
APP: JP
EE DRAWING NUMBER: 1102-09-L-1002015
CAD FILE: 1102-09-L-1002015.dwg

UNLESS OTHERWISE SPECIFIED DIMENSIONS ARE IN INCHES TOLERANCES ARE:
DECIMAL X ±.1 XX ±.02 XXX ±.005
WELD ± 1/32
CHAMFERS ±5°
ANGLES ±1°
CAST ±1/8
FRACTIONS ±1/16
THIRD ANGLE PROJECTION

DRAWN NGJ 12/20/11
CHECKED
QA
MFG
APPROVED JP
MATERIAL SEE TABLE
FINISH N/A

Dynamis Energy LLC,
776 E. Riverside Dr. Ste. 150
Eagle, ID 83616

TITLE
408T WASTE TO ENERGY FACILITY
MAIN BUILDING LAYOUT

SIZE D
DWG NO 1102-09-L-1002015
REV C
SCALE: 1/16"=1'-0"
SHEET 1 OF 1

VICTORY ENERGY OPERATIONS, LLC
10701 E. 126th North, Collinsville, OK 74021
Phone: 918-274-0023 Fax: 918-274-0059

HORIZON™ series

To:

EVERGREEN ENGINEERING

EVERGREEN ENGINEERING
Engineering and Construction Services

Modular Watertube Heat Recovery Boiler

Proposed for

DYNAMIS ENERGY

Presented To: **Mr. John Solvason, PE**
Evergreen Engineering
1740 Willow Creek Circle
Eugene, Oregon 97402

Date: February 2, 2012
Victory Energy Proposal No.: VE-4837_ADA

Scope of Supply

Supply		ITEM	Installation	
VEO	*Buyer*		*VEO*	*Buyer*
X		Boiler including refractory lining, CS outer casing with integral support steel base		X
X		Boiler Trim Package	X	
X		Water column relay box	X	
X		Steam pressure gauge	X	
N/A	N/A	Natural Gas Duct Burner	N/A	N/A
N/A	N/A	Fuel Trains	N/A	N/A
N/A	N/A	Fuel PRV	N/A	N/A
N/A	N/A	Burner Management System	N/A	N/A
N/A	N/A	Combustion Control System	N/A	N/A
X		Economizer externally insulated and lagged with integral support steel		X
	X	System Inlet and Outlet Duct		X
	X	Exterior Duct Insulation and Lagging		X
	X	Stack		X
X		Platforms and Walkways (Boiler, sootblowers, and Economizer)		X
X		Trim Piping within Terminal Points		X
	X	Interconnecting Piping Insulation and Lagging		X
	X	Piping External of Terminal Points at each Equipment Skid		X
X		Motorized Sootblowers		X
X		Safety Valves		X
	X	Steam Vent Silencer		X
	X	DA Package w/FW Pumps		X
	X	FW pre-heater (Shell & Tube Heat Exchanger)		X
	X	Blowdown System		X
	X	SNCR		X
	X	Foundation, Anchor Bolts, Concrete, Grout		X
X		Recommended Spare Parts Package (LATER)		X
N/A	N/A	Special Tools	N/A	N/A
X		Loading Equipment at Shop		X
	X	Unloading Equipment at Jobsite		X
X		Boil-Out Chemicals		X
	X	Site Disposal of Chemicals and Water		X
	X	Site Storage Prior to Installation		X
	X	Environmental Permit		X
	X	Erection and Start-Up Labor		X

Supply		ITEM	Installation	
VEO	*Buyer*		*VEO*	*Buyer*
	X	Field Balancing and Alignment of Rotating Equipment		X
	X	Electrical Power Supply and Lighting Protection		X
	X	Interconnecting Wiring or Cabling		X
X		Erection Consultant (per diem in accordance with VEO service terms and rates)		
X		Class Room Training (per diem in accordance with VEO service terms and rates)		
X		Field Testing Labor, Equipment and Consumables (per diem in accordance with VEO service terms and rates)		
X		Start-Up Consultant (per diem in accordance with VEO service terms and rates)		
X		Documentation		
X		O & M Manuals (Five (5) copies provided)		

General Information

The platen style modular boiler design offers the most efficient (from an installation perspective) approach for large capacity units compared to other designs. The unit will consist of separately shipped modules.

The proposed design will include a total of eight (8) shop assembled modules consisting of the following:

	Module Qty.	Module Description
1)	Two (2)	Furnace Section (shipped in two modules)
2)	One (1)	SNCR Spool
3)	One (1)	Screen section
4)	One (1)	Secondary Superheater Section
5)	One (1)	Primary Superheater Section
6)	One (1)	Evaporator Module
7)	One (1)	Economizer Module

The current designs optimize on the total number of tubes by using the relatively tall and narrow duct opening. The relatively tall evaporator tubes provide a conservative amount of hydraulic head to promote circulation and freedom to expand vertically downward. All tube to header connections are welded.

The single large diameter steam drum makes it easier to perform inspections and maintenance as the steam drum will house the required steam separation equipment.

The boiler will be built in accordance with the ASME Section I code.

VEO designs its units with logistics and constructability in mind.

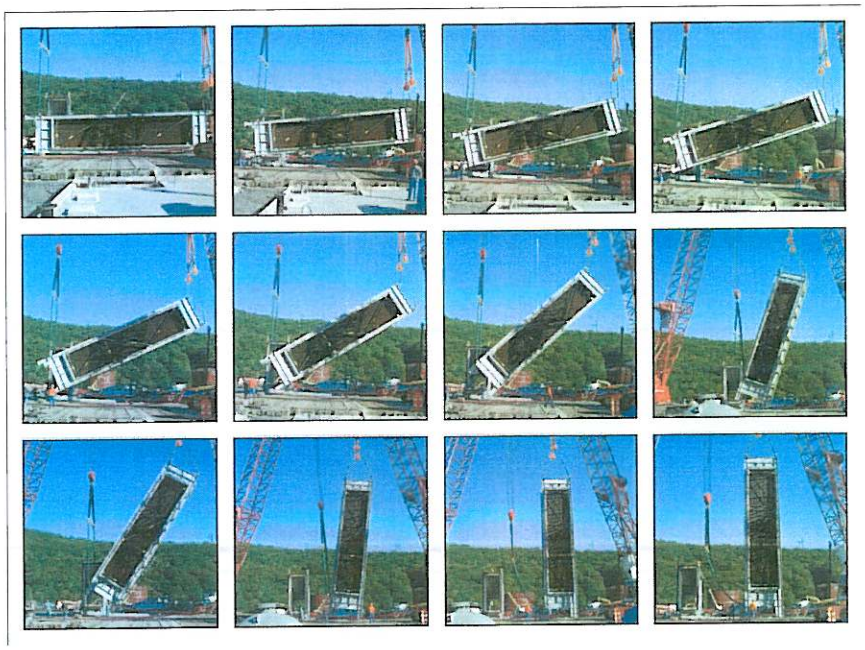

Drums

Submerged arc automatic welded and stress relieved with radiographed welded seams

- Drum material shall be SA-516 Gr. 70 (Normalized) or equal
- Drums are provided with a 12" x 16" manway access in each drum head on each end

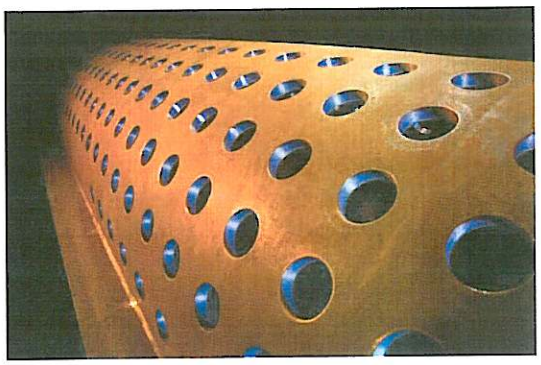

Upper (Steam) Drum

- Inside diameter is 64 inches ID, 2.5" thick
- External connections consist of the main steam outlet (Buttweld), water column (Buttweld) auxiliary low water cut-off (Buttweld), steam gauge (Buttweld), vent (Buttweld), safety valves (flanged outlet), feedwater (Buttweld), chemical feed (Buttweld), continuous blowdown (Buttweld) as well as required riser and downcomer connections.
- The upper drum includes a feedwater distribution pipe and a blowdown collection pipe

Lower Evaporator Collection Headers

- Diameter is 8 inch, Sch 140 SA-160B
- External connections consist of intermittent blowdown (Buttweld)
- The intermittent blowdown connections is at the lowest point for draining of the unit

Tubes

MODUAL BOX #1

Furnace Section:

- All tubes enter upper and lower platen headers radially where each tube to header joint is 100% welded.
- Boiler Screen Section 2.5" O.D., 0.220" M.W., SA-178 Grade A (Bare)
  The entire furnace will be coated with an Inconel 625 flame spray (or equal) to protect against the high levels of HCl.

Screen Section:

- All tubes enter upper and lower platen headers radially where each tube to header joint is 100% welded.
- Boiler Screen Section 2" O.D., 0.180" M.W., SA-178 Grade A (Bare)
  The first row of the screen section will be coated with an Inconel 625 flame spray (or equal) to protect against the high levels of HCl.

Superheater Section:

- All tubes enter upper and lower platen headers radially where each tube to header joint is 100% welded.
- Secondary Superheater (SH2) 1.9 O.D., 0.126" M.W., SB-407 (Bare)
- Primary Superheater (SH1) 2" O.D., 0.180 M.W., SA-213T22 (Bare)

Evaporator Section:

- All tubes enter upper and lower platen headers radially where each tube to header joint is 100% welded.
- Boiler Screen Section 2" O.D., 0.180" M.W., SA-178 Grade A (Bare)

Boiler Wall Construction

The outer casing of the boiler will have an average surface temperature of 180 Deg. F provided that the local ambient temperature does not exceed 80 Deg. F with 2 feet per second wind velocity. The boiler walls include the following:

- The boiler outer casing for all modules is a minimum ¼" plate with external structural stiffening. The interior of the casing will be lined with a thermal board and castable refractory system.

Boiler Access

The unit has limited access through 15" x 18" access doors in each cleaning lane on one side of the boiler for inspection and offline cleaning. Additionally, VEO will supply eight (8) retractable sootblowers for the HRSG (two prior to the screen section, two after the screen section, two between SH modules, and two before the Evaporator module), and two (2) rotary for the economizer complete with wallboxes, associated distal bearings and supports. Sequencing controls are not included. We have offered to supply the piping in random lengths. VEO drawings shall provide a suggested routing via general plans and elevations. Final routing and support shall be determined in the field.

Steam / Water Separation

The steam drum will include steam separation devices to achieve 99.95% ppm steam quality when the feedwater quality is supplied in accordance with the ABMA requirements. The specific approach includes three distinct phases of separation: 1.) First the down comers (water) and risers (steam) are channeled to the appropriate areas of the steam drum via baffles; 2.) Second the steam flows through a series on vortex cyclones that use centrifugal force to drop additional moisture from the steam; 3.) Finally the steam flows though chevrons that incorporate corrugated plates to cyclically change the direction of the flow path, removing additional moisture prior to exiting the steam drum.

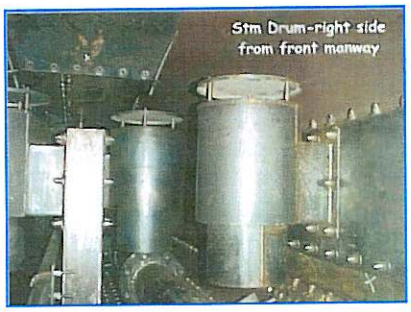

Structural Framing

The boiler modules include rigid structural framing designed to distribute the loads onto a flat concrete foundation. We have included structural steel to extend from each module base to approx. 8' below the bottom of each hopper. Once the final site location details are reviewed we may need to revise our structural steel supports, which may have a cost impact.

The basis of the structural design shall be the ASCE-05: Wind load design is 90 mph; Exposure C; Importance Factor 1.25.

Interconnecting Piping:

Interconnecting piping will be provided between the feedwater 3-valve bypass assembly and the economizer inlet and between the economizer outlet and the boiler inlet. Additionally the crossover header piping from the steam drum outlet to the superheater inlet, as well as evaporator crossover piping between the screen section and the primary evaporator is included. The installation of this piping will be performed by others in the field. Once the piping installation is complete, the piping will need to be Hydro-tested to 1 ½ times the design pressure of the system in accordance with the ASME code.

We have offered to supply the sootblower steam piping in random lengths, VEO drawings shall provide a suggested routing via general plans and elevations. Final routing and support shall be determined in the field.

Large bore (>2") piping shall be designed fabricated and supplied, incorporating the stress analysis for feedwater and steam service. Field joints shall be incorporated to accommodate shipping and constructability considerations.

Small bore (= or <2") piping shall supplied via random lengths. VEO drawings shall provide a suggested routing via general plans and elevations. Final routing shall be determined in the field.

Painting:

All equipment provided by VEO will be, at a minimum SSPC-SP3, prime painted with inorganic zinc primer and final finish paint per VEO Standards for the applicable service temperature. Touch up in the field after equipment installation shall be performed by others.

Boiler Trim Package (Quantities are per Boiler):

BOILER	QUANTITY
Water Column	1
Water Column Drain Valve	1
Gage Valves	2 Sets
Water Level Gage	2
Water Level Gage Drain Valve	2
Auxiliary Low Water Cutoff	1
Auxiliary Low Water Cutoff Drain Valve	1
Low Water Cutout By-Pass Pushbutton	1
Drum Level Transmitter Shutoff Valve	4
Drum Level Transmitter Drain Valve	2
Steam Pressure Gage	1
Steam Pressure Gage Shutoff Valve	1
Steam Pressure Gage Test Valve	1
Hi Steam Pressure Switch	1
Hi-Hi Steam Pressure Switch	1
Boiler Safety Valve #1	1
Boiler Safety Valve #2	1
Steam Drum Vent Valve	1
Continuous Blowdown Regulating Valve	1
Continuous Blowdown Stop Valve	1
Superheater Safety Valve	1
Superheater Start-up Vent Valve	1
Superheater Drain Valve	2
Superheater Test Well	1
Interstage Desuperheater Spay Nozzle	1
Main Steam Stop Valve	1
Non Return Valve	1
Feedwater 3-valve bypass assembly	1
Feedwater Control Valve	1
Feedwater Gate Valve	1
Feedwater Check Valve	1

We will supply the following spares as part of our offering:
One (1) spare set of manway gaskets
One (1) boil out gage glass

Boiler Instrumentation Package:

TAG NUMBER	SERVICE
LE-82	STEAM DRUM LEVEL SENSING FOUR PROBE WATER COLUMN
LE-83	STEAM DRUM AUXILIARY LOW LEVEL SENSING WATER COLUMN
RP-84	RELAY PANEL FOR ABOVE WATER COLUMNS
HS-85	LOW LEVEL SHUTDOWN BY-PASS PUSHBUTTON STATION FOR ABOVE
LG-80A	STEAM DRUM LEVEL GAUGE
LG-80B	STEAM DRUM LEVEL GAUGE
HV-81	VALVE SET FOR ABOVE LEVEL GAUGE
HV-81	VALVE SET FOR ABOVE LEVEL GAUGE
PI-95	STEAM DRUM PRESSURE GAUGE
PSH-94	STEAM DRUM HIGH PRESSURE ALARM SWITCH
PSHH-93	STEAM DRUM HIGH PRESSURE SHUTDOWN SWITCH
LT-88A	STEAM DRUM LEVEL TRANSMITTER
HV-87	3-VALVE MANIFOLD FOR ABOVE TRANSMITTER
LT-88B	STEAM DRUM LEVEL TRANSMITTER
HV-87	3-VALVE MANIFOLD FOR ABOVE TRANSMITTER
PT-91	STEAM DRUM PRESSURE TRANSMITTER
FT-30	FEEDWATER FLOW TRANSMITTER
HV-31	3-VALVE MANIFOLD FOR ABOVE TRANSMITTER
FE-30	ORIFICE PLATE FOR ABOVE TRANSMITTER (FLANGE BY OTHERS)
FCV-34	BOILER LEVEL CONTROL VALVE
ZT-34	POSITION FEEDBACK TRANSMITTER FOR ABOVE CONTROL VALVE
TI-40	FEEDWATER SUPPLY THERMOMETER W/ THERMOWELL
TI-41	FEEDWATER OUT OF ECONOMIZER THERMOMETER W/ THERMOWELL
TI-42	FEEDWATER OUT OF ECONOMIZER THERMOMETER W/ THERMOWELL
TI-46	FEEDWATER SUPPLY TO DRUM THERMOMETER W/ THERMOWELL
PSV-45	ECONOMIZERS RELIEF VALVE
PSV-23	STEAM DRUM RELIEF VALVE
PSV-24	STEAM DRUM RELIEF VALVE
TT-110	STEAM OUT OF PRIMARY SUPERHEATER TEMPERATURE TRANSMITTER
TE-110	THERMOCOUPLE / THERMOWELL FOR ABOVE TRANSMITTER
BV-61	ATTEMPERATOR COOLING WATER ON/OFF VALVE
ZSO-61	OPEN POSITION FEEDBACK SWITCH ON ABOVE VALVE
ZSC-61	CLOSED POSITION FEEDBACK SWITCH ON ABOVE VALVE
FCV-63	ATTEMPERATOR COOLING WATER FLOW CONTROL VALVE
ZT-63	POSITION FEEDBACK TRANSMITTER FOR ABOVE CONTROL VALVE
DS-67	SUPERHEATED STEAM ATTEMPERATOR

	Boiler Instrumentation Package cont'd
PSV-112	SUPERHEATER RELIEF VALVE
TT-113	STEAM OUT OF SEC. SUPERHEATER TEMPERATURE TRANSMITTER
TE-113	THERMOCOUPLE / THERMOWELL FOR ABOVE TRANSMITTER
PI-119	STEAM LINE PRESSURE GAUGE
FT-123	STEAM FLOW TRANSMITTER
HV-124	3-VALVE MANIFOLD FOR ABOVE TRANSMITTER
FE-123	ORIFICE PLATE FOR ABOVE TRANSMITTER (FLANGE BY OTHERS)
TT-22A	FLUE GAS INTO SCREEN TUBE SECTION TEMPERATURE TRANSMITTER
TE-22A	THERMOCOUPLE FOR ABOVE TRANSMITTER
TT-22B	FLUE GAS INTO SUPERHEATER SECTION TEMPERATURE TRANSMITTER
TE-22B	THERMOCOUPLE FOR ABOVE TRANSMITTER
TT-22C	FLUE GAS INTO EVAPORATOR SECTION TEMPERATURE TRANSMITTER
TE-22C	THERMOCOUPLE FOR ABOVE TRANSMITTER
TT-22D	FLUE GAS INTO ECONOMIZER SECTION TEMPERATURE TRANSMITTER
TE-22D	THERMOCOUPLE FOR ABOVE TRANSMITTER
TT-22E	FLUE GAS OUT OF ECONOMIZER SECTION TEMPERATURE TRANSMITTER
TE-22E	THERMOCOUPLE FOR ABOVE TRANSMITTER
BV-141	SOOTBLOWER STEAM ON/OFF VALVE
ZSO-141	OPEN POSITION FEEDBACK SWITCH ON ABOVE VALVE
ZSC-141	CLOSED POSITION FEEDBACK SWITCH ON ABOVE VALVE
PCV-142	SOOTBLOWER STEAM PRESSURE CONTROL VALVE
ZT-142	POSITION FEEDBACK TRANSMITTER FOR ABOVE CONTROL VALVE
PSV-145	SOOTBLOWER STEAM SUPPLY LINE RELIEF VALVE
PT-200	SOOTBLOWER STEAM PRESSURE TRANSMITTER

ECONOMIZER SYSTEM

General

One (1) economizer system will be provided for preheating the feedwater for the waste heat recovery boiler to recover heat from the boiler exhaust. The system shall consist of an economizer which will be integrally connected to the boiler outlet connection and will be supplied with required structural stiffening and support.

Economizer Specifications

The economizer modules shall be a rectangular box type, each connected in series, utilizing a carbon steel shell surface. The economizer shall be counter current type arranged to allow the boiler exhaust gas to travel horizontally, while the feedwater travels horizontally in the opposite direction. The economizer shall be constructed in accordance with the ASME code, Section 1 and will bare a National Board Registration.

Construction Features

1. All pressure parts shall conform to the applicable provisions of the current ASME Power Boiler Code, Section 1. The economizer shall be properly nameplated and code stamped. The design pressure shall meet or exceed the design pressure of the boiler.

2. Tubes shall be 1.5" O.D with a minimum wall thickness of 0.180" MW SA-178. All tubes consist of Solid Carbon Steel fins, 2 fins per inch, 0.06" thick and 0.5" high.

3. All tubes shall be individually welded in platen headers and return bends.

4. Terminal connections shall be butt-weld. Headers shall be SA 106B material. Vent, and drain valve connections shall be a minimum of ¾" socket weld.

5. All coils shall be completely drainable by gravity.

6. Method of tube supports shall allow for expansion vertically downward.

9. All exterior surfaces shall be painted with high temperature paint.

10. Insulation shall be shop installed to the outer casing using mineral wool and corrugated lagging in order to maintain an average outer lagging surface temperature of 180 Deg. F provided that the local ambient temperature does not exceed 80 Deg. F with 2 feet per second wind velocity.

WALKWAYS AND LADDERS

Walkways will be provided as indicated. They include:

- Operating platform typical around the steam drum with ladders and or stairs to grade.
- Access to Economizer headers.
- Access to Sootblowers.

All platforms and ladders will be in compliance with all OSHA regulations.

Clarification:

1. VEO has not proposed a conveying system for ash exiting the VEO supplied hoppers.
2. VEO is proposing outer casing temperature as stated.
3. Basic start-up spares are included. Full spare parts proposal would follow once the design has been approved.
4. All field services are proposed on a per diem basis per the attached.
5. VEO reserves the right to further clarify details on other specifications provided.
6. Instrumentation is shipped loose for field installation by others.

BOILER WATER CHEMISTRY RECOMMENDATIONS

ABMA RECOMMENDED BOILER WATER LIMITS

Boiler Type	Drum pressure, psig	Total dissolved solids[b] in boiler water, ppm (max.)	Total Alkalinity[c] in boiler water, ppm	Suspended solids in boiler water, ppm (max.)	Total dissolved solids[c,e] in steam, ppm (max. expected value)
Drum-type boiler	0-300	700-3500	140-700	15	0.2-1.0
Drum-type boiler	301-450	600-3000	120-600	10	0.2-1.0
Drum-type boiler	451-600	500-2500	100-500	8	0.2-1.0
Drum-type boiler	601-750	200-2000	40-400	3	0.1-0.5
Drum-type boiler	751-900	150-1500	30-300	2	0.1-0.5
Drum-type boiler	901-1000	125-1250	25-250	1	0.1-0.5
Drum-type boiler	1001-1800	100	variable[d]	1	0.1
Drum-type boiler	1801-2350	50	variable[d]	N/A	0.1
Drum-type boiler	2351-2600	25	variable[d]	N/A	0.05
Drum-type boiler	2601-2900	15	variable[d]	N/A	0.05
Once-through boiler	1400 & above	0.05	N/A	N/A	0.05

[b] Actual values within the range reflect the TDS in the feedwater. Higher values are for high solids; lower values are for low solids in the feedwater.

[c] Actual values within the range are directly proportional to the actual value of TDS of boiler water. Higher values are for high solids; lower values are for low solids in the boiler water.

[d] Dictated by boiler water treatment.

[e] These values are exclusive of silica.

Predicted Performance Data:

VICTORY ENERGY CUSTOMER SPEC SHEET

Customer:	Dynamis, ADA County, ID	Date:	12/12/2011
Reference:	MSW- Syngas HRSG	Quote #:	VE-4837

		Design Case	Max. Case
Performance Data:			
Total Heat Input	(mmBtu/h)	307.4953	346.4282
Total Heat Absorbed	(mmBtu/h)	266.3954	297.8842
HRSG Efficiency	(%)	86.6	86
Total Draft Loss	(in. WC)	6.24	7.9
Steam Temp. @ NRV Outlet	(F)	825	825
Steam Press.@ NRV Outlet	(psig)	900	900
Steam Flow @ NRV Outlet	(lb/hr)	223753	250201
Screen Performance			
Gas Flow into HRSG	(lb/hr)	561861	633000
Gas inlet Temp	(F)	1824	1841
Gas outlet Temp	(F)	1352	1386
LMTD	(F)	1029.4	1056.8
Overall U	(Btu/ft^2_h_F)	12.21	12.92
Heat Transfer	(mmBtu/hr)	79.9758	86.8584
Gas Draft Loss	(in wc.)	0.45	0.57
SH2 Performance			
Gas Flow into HRSG	(lb/hr)	561861	633000
Gas inlet Temp	(F)	1352	1386
Gas outlet Temp	(F)	1180	1214
Steam Flow	(lb/hr)	223753	250201
Steam Outlet Pressure	(psig)	910	910
Steam Outlet Temp	(F)	826	826
Steam Inlet Pressure	(psig)	930	930
Steam Inlet Temp	(F)	635	632
Overall U	(Btu/ft^2_h_F)	12.09	12.84
LMTD	(F)	514.3	550.9
Heat Transfer	(mmBtu/hr)	28.0585	31.9177
Gas Draft Loss	(in wc.)	0.44	0.56
Tube Side Steam Pressure Drop	(psi)	12.88	16.05
SH1 Performance			
Gas Flow into HRSG	(lb/hr)	561861	633000
Gas inlet Temp	(F)	1180	1214
Gas outlet Temp	(F)	1018	1051
Steam Flow	(lb/hr)	217580	242242
Steam Outlet Pressure	(psig)	930	930
Steam Outlet Temp	(F)	677	680
Steam Inlet Pressure	(psig)	950	950
Steam Inlet Temp	(F)	540	540
Overall U	(Btu/ft^2_h_F)	11.47	12.22
LMTD	(F)	475.2	507.2
Heat Transfer	(mmBtu/hr)	25.8913	29.4354
Gas Draft Loss	(in wc.)	0.43	0.55
Tube Side Steam Pressure Drop	(psi)	10.53	13.07
Desuperheater Performance			
Water Temp.	(F)	250	250

Water Flow Rate	(lb/h)	6173	7959

HRSG Performance

Summary:

Gas Flow into HRSG	(lb/hr)	561861	633000
Gas inlet Temp	(F)	1018	1051
Gas outlet Temp	(F)	745	771
Steam Flow(include Screen)	(lb/hr)	217580	242227
Steam Pressure	(psig)	950	950
Steam Temp	(F)	540	540
Blowdown	(%)	1	1
Feed Water Flow	(lb/hr)	219778	244673
Blowdown Water Flow	(lb/hr)	2198	2447
Feed Water, Inlet Temp	(F)	503	513
Overall U	(Btu/ft^2_h_F)	11.12	11.79
LMTD	(F)	589.8	618.7
Heat Transfer	(mmBtu/hr)	122.4992	136.264
Gas Press. Drop	(in wc.)	1.98	2.51

Economizer Performance

Gas Flow	(lb/hr)	561861	633000
Gas inlet Temp	(F)	745	771
Gas outlet Temp	(F)	345	358
Water Flow	(lb/hr)	219756	244649
Operating Pressure	(psig)	980	980
Water Outlet Temp	(F)	503	513
Water Inlet Temp	(F)	250	250
Overall U	(Btu/ft^2_h_F)	12.1	12.82
LMTD	(F)	156.9	172.3
Heat Transfer	(mmBtu/hr)	59.4989	69.1797
Gas Draft Loss	(in wc.)	3.39	4.28
Tube Side Pressure Drop	(psi)	14.79	18.32

Fuel and Flue Gas Data:

Flue Gas Analysis

H2O	% vol	11.25	11.25
CO2	% vol	9.25	9.25
N2	% vol	71.48	71.48
O2	% vol	8	8
SO2	% vol	0.0035	0.0035
HCl	% vol	0.0145	0.0145
Total	% vol	100	100

Molecular Weight of Flue Gas	(lb/mole)	28.6896	28.6896
Ash in Flue Gas	(lb ash/lb flue gas)	0.00004	0.00004
Dew Point of H2O	(F)	116	116
Dew Point of SO3	(F)	248	248
Dew Point of HCl		123	123
Altitude Above Sea Level	(ft)	3050	3050

Physical Design Data:

Furnace Design Data		
Furnace Volume	(ft^3)	8018
Furnace Effective Area	(ft^2)	1828
SH2 Design Data		
Total Number of Tubes		840
Total Heat Transfer Area	(ft^2)	5014
Tube OD	(in)	1.9
Tube Wall Thickness(min.)	(in)	0.1269
Tube Specification		SB-407
SH1 Design Data		
Total Number of Tubes		840
Total Heat Transfer Area	(ft^2)	5278
Tube OD	(in)	2
Tube Wall Thickness(min.)	(in)	0.18
Tube Specification		SA-213T22
HRSG Design Data		
Tube MW	(in)	0.18
Tube OD, avg.	(in)	2
Tube Specification		SA-178A
Total Heat Transfer Area	(ft^2)	18680
Economizer Design Data		
Tube OD	(in)	1.5
Tube MW	(in)	0.18
Tube Specification		SA-178A
Fin Material		CS
Total Number of Tubes		1408
Total Heat Transfer Area	(ft^2)	37289

Victory Energy Operations requires the gas velocity and concentration distribution at the entrance plane of the boiler system must not vary more than ±15% RMS of the average and that less than 15% of the points measured are ±15% of the average.

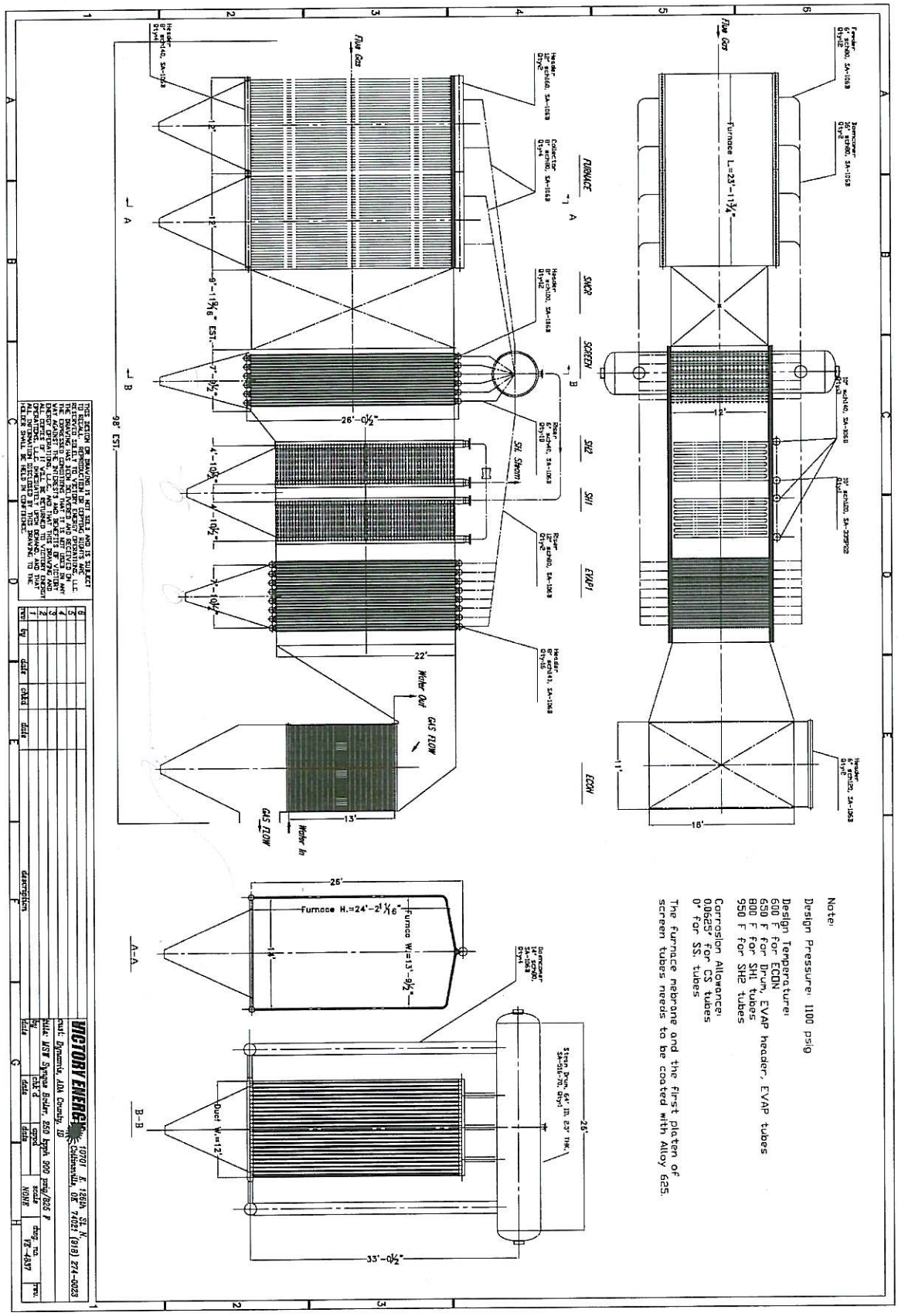
Flue Gas
Furnace L=23'-11¼"
FURNACE
SNCR
SCREEN
SH2
SH1
EVAP1
ECON
12'
18'
11'
26'-0½"
22'
13'
9'-11⅝" EST.
7'-0½"
4'-10½"
4'-10½"
7'-10½"
98' EST.
Water Out
GAS FLOW
Water In
Furnace H.=24'-2¹⁄₁₆"
Furnace W.=13'-9½"
Duct W.=12'
33'-0½"
A-A
B-B
Note:
Design Pressure: 1100 psig
Design Temperature:
600 F for ECON
650 F for Drum, EVAP header, EVAP tubes
800 F for SH1 tubes
950 F for SH2 tubes
Corrosion Allowance:
0.0625" for CS tubes
0" for SS tubes
The furnace membrane and the first platen of screen tubes needs to be coated with Alloy 625.
VICTORY ENERGY
10701 E. 126th St. N.
Collinsville, OK 74021 (918) 274-0023
cust: Dynamic, ADA County, ID
title: MSW Syngas Boiler, 250 bpph 900 psig/825 F
drawn: Gomez
date: 6/6/18
scale: NONE
dwg. no. VE-4837
rev.
chk'd
date
by
date
dwg. no.
rev.
date
by
date
dwg. no.
rev.
0
1
2
3
4
5
6
THIS DESIGN OR DRAWING IS NOT SOLD AND IS SUBJECT TO RECALL. REPRODUCTION OR COPYING RIGHTS ARE RESERVED. ALL INFORMATION DISCLOSED BY THE CONFIDENCE THAT IT IS NOT USED IN ANY WAY AGAINST US OR DISCLOSED TO OTHERS. ENERGY OPERATIONS, LLC. AND THAT THIS DRAWING AND ALL INFORMATION DISCLOSED BY THIS DRAWING TO THE INDEX SHALL BE HELD IN CONFIDENCE.

CCSolutions
Composite Cooling Solutions, L.P.

4150 International Plaza, Suite 500
Fort Worth, Texas 76109
Phone 817.246.8700
Fax 817.246.8717

www.compositecooling.com

CCSolutions
Composite Cooling Solutions, L.P.

OPERATION

AND

MAINTENANCE MANUAL

FOR

COMPOSITE COOLING SOLUTIONS, L. P.

FIBERGLASS STRUCTURED

COUNTERFLOW COOLING TOWER

PHOENIX™

COMPOSITE COOLING SOLUTIONS, L P.
4150 International Plaza Suite 500
FORT WORTH, TX 76109
TEL: (817)246-8700
FAX: (817)246-8717

louvers and reduce the ice buildup.

3. Under extended extreme cold conditions, it may be necessary to operate the fan in reverse. This forces warm air out through the louvers, melting any accumulated ice-adequate heat load must be available. Fan reversal at half speed is recommended. Reverse operation of the fan should be used sparingly and should only be used to control ice, not to prevent it. Reverse fan operation should not need to exceed 1 or 2 minutes. Monitoring is required to determine the time required to melt accumulated ice

Reverse operation of fans for prolonged periods during subfreezing weather can cause severe damage to fans and fan cylinders. Ice can accumulate inside fan cylinders at fan blade plane of rotation and fan blade tips will eventually strike this ring of ice, damaging the fan blades or cylinder. Ice can also accumulate on fan blades and be thrown off, damaging fan cylinder or blades. Allow a minimum of 10 minute delay between reverse operation and forward operation during subfreezing weather to permit ice to dissipate from fan blades and fan cylinders. See Fan Drive Caution note on page 5 for fan speed change and reversing precautions.

4. With no heat load on the circulating water, icing cannot be controlled effectively by air control during freezing weather. **Towers must not be operated with reduced water rate and or no heat load during** freezing weather. If the circulating water system cannot be shut down, water returning from the process should be made to bypass the tower. If a bypass is used, all water must be bypassed without modulation. If the water bypass is directly into the tower's cold water basin, its design must be approved by CCS engineering.

Maintenance:

Intermittent Wintertime Operation
If periods of shutdown (nights, weekend s, etc.) occur during freezing weather, measures must be taken to prevent the water in the cold water basin- and all exposed pipe work-from freezing.

Unless some means of freeze prevention is incorporated into your system, the tower basin and exposed pipe work should be drained at the beginning of each wintertime shutdown period.
If tower basin is drained, verify that all basin heaters have been shut off either by automatic cutoff or disconnect switch.
It is recommended that you discuss your freeze prevention options with your local CCS Sales Manager.

Water Treatment and Blowdown

Maintaining Water Quality
The materials used in your tower are selected to offer long, corrosion-free service in a "normal" cooling tower environment, defined as follows: Circulating water with a p H between 6.5 and 9; a chloride content (as NaCi) below 750 ppm; a sulfate content (SO 4) below 1200 ppm; carbonate or bicarbonates below 300 ppm (as CaC03); a maximum inlet water temperature not to exceed 120'F (49'C); no significant contamination with unusual chemicals or foreign substances; and adequate water treatment to minimize scaling,

Startup Conditions: The water conditions during the initial tower operation are crucial in preventing premature corrosion of galvanized steel (white rust). For at least the first eight weeks of operation, p H should be controlled between 6.5 and 8.0 with hardness and alkalinity levels between 100 and 300 ppm (expressed as CaCO,). Chlorine if added intermittently, with a free residual not to exceed 1 ppm-maintained for short periods. Free residual should not exceed 0.4 ppm if chlorine is added continuously. Excessive chlorine levels may deteriorate sealants and other materials of construction.

Quality Guidelines for Chemically Treated Circulating Water

The following table indicates the recommended circulating water quality to insure long life of the tower components.

Water Property	Recommended Level
PH	6.5 to 9.0
Temperature	125° F Maximum
Hardness as $CAC0_3$	30 to 750 ppm
Alkalinity as $CAC0_3$	500 ppm maximum
Total Dissolved Solids	1500 ppm maximum
Conductivity	2400 microm H05
Chlorine	1.0 ppm intermittent and 0.5 ppm continuously
Chlorides	250 ppm maximum as Cl 410 ppm maximum as NaC1
Sulfates	250 ppm maximum
Silica	150 ppm as $Si0_2$
Manganese	0.1 ppm
Oil, Fats, Grease	Zero for film fill towers
Solvents	None
Nitrates	300 ppm maximum
Suspended Solids	25 ppm maximum for film fill
Bacteria Count	Less than 10,000 CFU/ml for film fill

Maintenance

Cooling tower cleaning

Any evaporative-type cooling tower must be thoroughly cleaned on a regular basis to minimize the growth of bacteria, including Legionella Pneumophilia, to avoid the risk of sickness or death. Service personnel must wear proper personal protective equipment during decontamination. Do NOT attempt any service unless the fan motor is locked out.

Operators of evaporative cooling equipment, such as water cooling towers, should follow maintenance programs which will reduce to an absolute minimum the opportunity for bacteriological contamination. Public Health Service officials have recommended that "good housekeeping" procedures be followed, such as: regular inspections for concentrations of dirt, scale, and algae; periodic flushing and cleaning ; and the following of a complete water treatment program including biocidal treatment.

The visual inspection should take place at least once a week during the operating season. The periodic flushing and cleaning should be done before and after each cooling season, but in any event at least twice a year. The hot water basins and nozzles, louvers, drift eliminators, and easily accessible fill surfaces should be flushed by use of a moderate-pressure water nozzle, being careful not to cause physical damage. A reliable water treatment program should be installed and maintained. Filtration devices may be employed to reduce the suspended solid s concentrations, thus increasing the effectiveness of the water treatment program.

Blowdown

A cooling tower cools water by continuously causing a portion of it to evaporate. Although the water lost by evaporation is replenished by the makeup system, it exits the tower as pure water-leaving behind its burden of dissolved solids to concentrate in the remaining water. Given no means of control, this increasing concentration of contaminants can reach a very high level.

Maintenance

Blowdown Rate

Cooling Range (°F)	Two Concentrations	Four Concentrations
10	0.7%	0.17%
15	1.1%	0.30%
20	1.5%	0.43%

Range = difference between hot water temperature entering the tower & cold water temperature leaving the tower.

In order to achieve water quality which is acceptable to the cooling tower (as well as the remainder of your circulating water system), the selected water treatment company must work from a relatively constant level of concentrations. This stabilization of contaminant concentrations is usually accomplished by blowdown, which is the constant discharge of a portion of the circulating water to waste. As a rule, acceptable levels on which to base a treatment schedule will be in the range of 2 -4 concentrations. The table above gives approximate rates of blowdown (percent of total water flow rate constantly wasted) to achieve those concentrations at various cooling ranges.

When water treatment chemicals are added, they should not be introduced into the circulating water system via the cold water basin of the cooling tower. Water velocities are lowest at the point, which results in inadequate mixing.

Schedule of Tower Maintenance

Included in the instruction packet are separate User Manuals on each major operating component of the tower, and it is recommended that you read them thoroughly. Where discrepancies may exist, the separate User Manuals will take precedence.

The following is recommended as a minimum routine of scheduled maintenance:

Always shut off electrical power to the tower fan motor prior to performing any inspections that may involve physical contact with the mechanical of electrical equipment in or on the tower. Lock out and tag out any electrical switches to prevent others from turning the power back on. Service personnel must wear proper personal protective clothing and equipment.

Daily: Observe, touch and listen to the tower for a few moments each day. Become accustomed to its normal appearance, sound and level of vibration. Abnormal aspects relating to the rotating equipment should be considered reason to shut down the tower until the problem can be located and corrected.

Maintenance
Weekly: Observe operation of the motor, drive shaft, gear box and fan. Become familiar with the normal operating temperature of the motor, as well as the sight and sound of all components as a whole. Shut off the fan for a few minutes, check the level of oil in the gear box. Add oil as necessary. Check system for leaks if the amount of oil required appears unusual. (If oil is added at the external fill port, allow adequate time for the level to stabilize before reading final level.)

Inspect louvers and basin trash screens, and remove any debris which may have accumulated. Replace any damaged or worn out components. Use of high-pressure water may damage the eliminator and louver material.

Check for any buildup of slit on the floor of the cold water basin. Mentally note the amount, if any, so future inspections will enable you to determine the rate at which it is forming.

Inspect for bacterial growth and general operating conditions. Bacterial growth should be reported to your water treatment expert for immediate attention. **Monthly:** Check Gear Box oil sample for presence of water and /or sludge. Make sure vents are open. **Semi-Annually:** Drain Gear Box and refill with fresh oil, as outlined in the gearbox manual. If sludge is present in the oil flush gearbox before refilling.

Oil changes have been reduced to 5-year intervals when using synthetic oil. Designed specifically for gear boxes. If, after five years, turbine-type mineral oil is used, the oil must be changed semi-annually. Refer to Gear Box Manual.

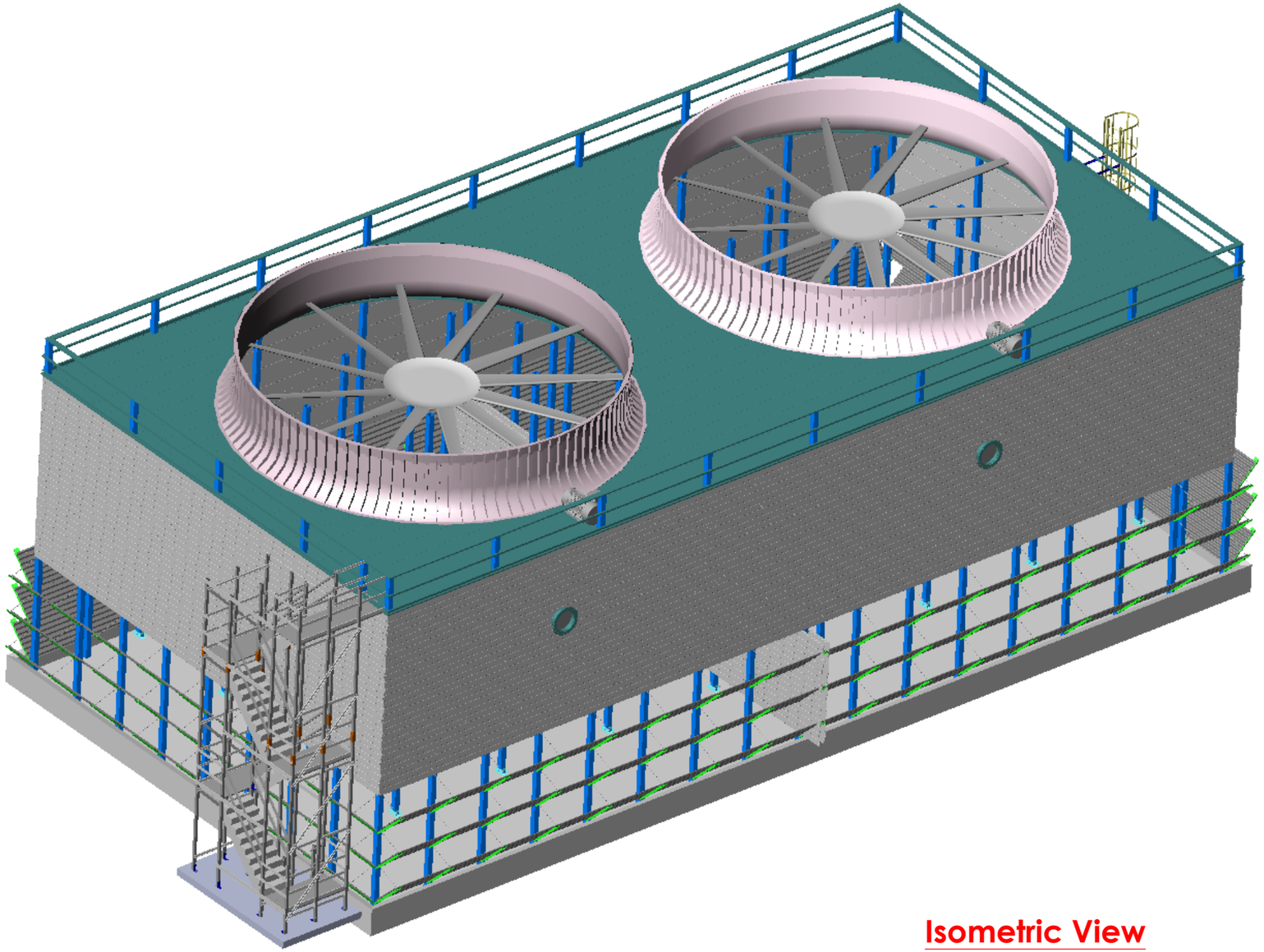

Isometric View

DYNAMIS
IDAHO
2-FT-4646-200-P7-FM
GPM/CELL = 8500 ~ TOTAL GPM = 17000
97° F HWT ~ 71° F CWT ~ 63° F WBT

GENERAL NOTES:

1. INLET FLANGE IS NOT TO CARRY ANY OTHER PIPING LOADS.
2. PUMP HEAD REQUIRED FROM INTERFACE POINT OF CCS FURNISHED PIPE IS 4'-0".
3. BASIN, DRAIN, MAKE-UP, OUTLET, AND OVERFLOW ARE BY OTHERS.
4. HYDRAULIC DESIGN OF BASIN AND BASIN PIPING ARE BY OTHERS.
5. ANY MODIFICATIONS OR CHANGES TO INTERFACE PIPING CONNECTIONS AS SHOWN BY CCS GENERAL ARRANGEMENT DRAWINGS MAY RESULT IN MANUFACTURING DELAYS AND/OR CONTRACT ADJUSTMENT.
6. DO NOT SCALE FROM THESE DRAWINGS.

PROPRIETARY AND CONFIDENTIAL
THE INFORMATION CONTAINED IN THIS DRAWING IS THE SOLE PROPERTY OF COMPOSITE COOLING SOLUTIONS. ANY REPRODUCTION IN PART OR AS A WHOLE WITHOUT THE WRITTEN PERMISSION OF COMPOSITE COOLING SOLUTIONS IS PROHIBITED.

REVISION

NUM	DATE	DESCRIPTION	BY	CHK'D

CCSolutions Composite Cooling Solutions, L.P. **Composite Cooling Solutions**

General Arrangement
Isometric View

DWG. NO. KD-11122

DRAWN	CHECKED	APPROVED	DATE	REV.
TLS	BB	KD	2/22/2012	0

DO NOT SCALE DRAWING | SCALE:1:126 | SHEET 1 OF 6

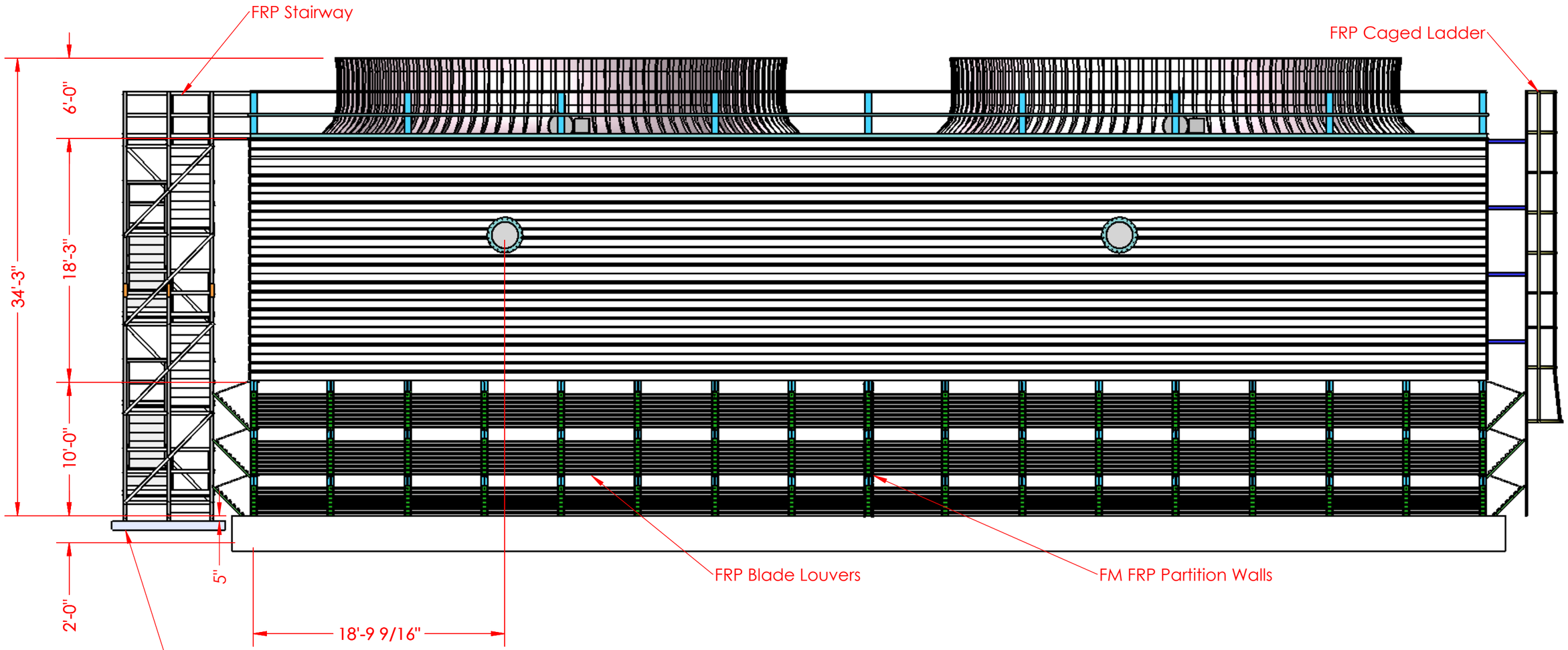

Front View

DYNAMIS
IDAHO
2-FT-4646-200-P7-FM
GPM/CELL = 8500 ~ TOTAL GPM = 17000
97° F HWT ~ 71° F CWT ~ 63° F WBT

IMPORTANT NOTE:
The thermal design of this tower is based upon an unobstructed horizontal air inlet that is equal to the tower air inlet height

PROPRIETARY AND CONFIDENTIAL
THE INFORMATION CONTAINED IN THIS DRAWING IS THE SOLE PROPERTY OF COMPOSITE COOLING SOLUTIONS. ANY REPRODUCTION IN PART OR AS A WHOLE WITHOUT THE WRITTEN PERMISSION OF COMPOSITE COOLING SOLUTIONS IS PROHIBITED.

REVISION

NUM	DATE	DESCRIPTION	BY	CHK'D

CCSolutions Composite Cooling Solutions, L.P. — Composite Cooling Solutions

General Arrangement
Front View

DWG. NO. KD-11122

DRAWN	CHECKED	APPROVED	DATE	REV.
TLS	BB	KD	2/22/2012	0

DO NOT SCALE DRAWING | SCALE:1:91 | SHEET 2 OF 6

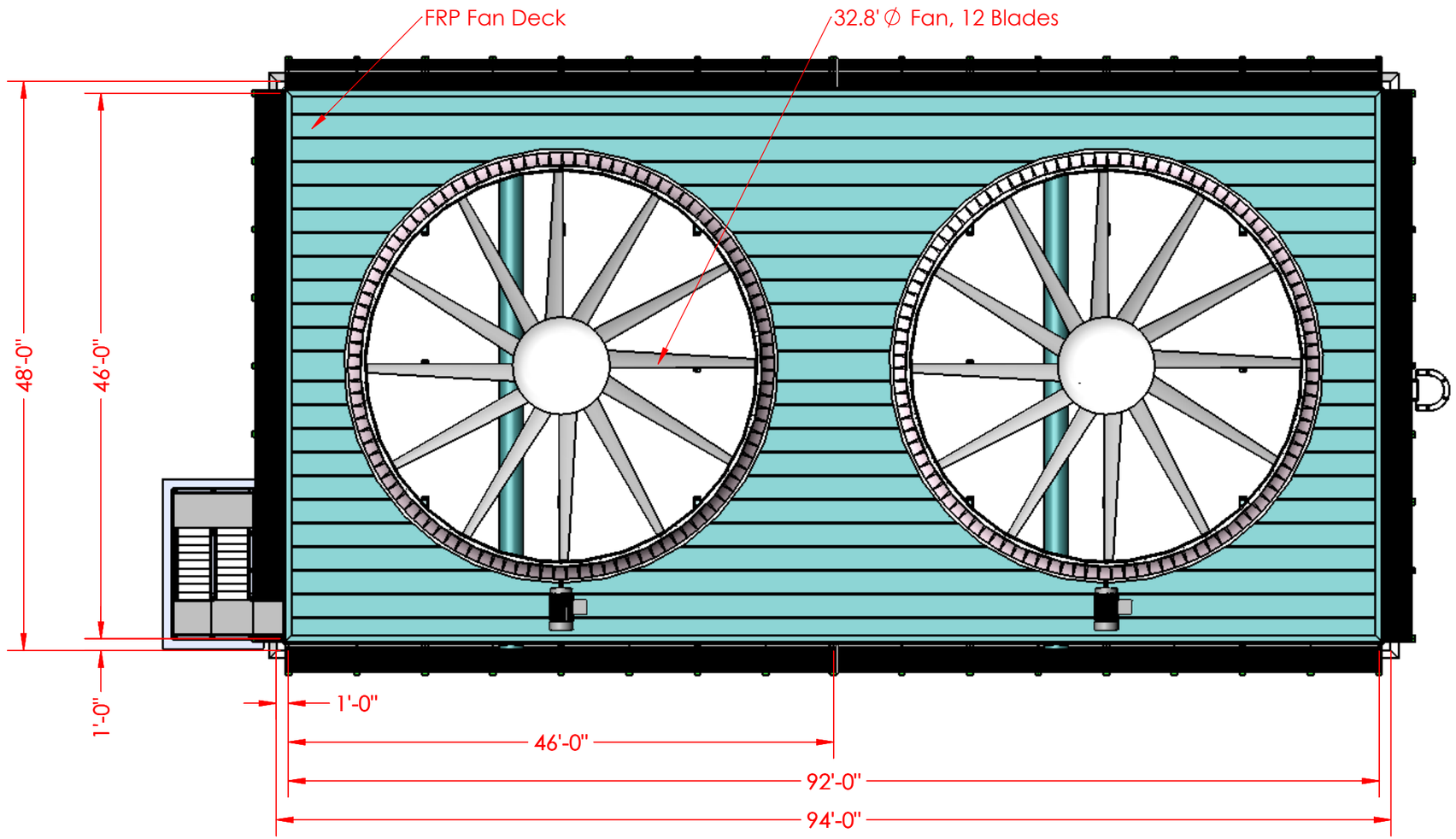

Top View

DYNAMIS
IDAHO
2-FT-4646-200-P7-FM
GPM/CELL = 8500 ~ TOTAL GPM = 17000
97° F HWT ~ 71° F CWT ~ 63° F WBT

PROPRIETARY AND CONFIDENTIAL
THE INFORMATION CONTAINED IN THIS DRAWING IS THE SOLE PROPERTY OF COMPOSITE COOLING SOLUTIONS. ANY REPRODUCTION IN PART OR AS A WHOLE WITHOUT THE WRITTEN PERMISSION OF COMPOSITE COOLING SOLUTIONS IS PROHIBITED.

REVISION

NUM	DATE	DESCRIPTION	BY	CHK'D

CCSolutions Composite Cooling Solutions, L.P.

Composite Cooling Solutions

General Arrangement Drawing
Top View

DWG. NO. KD-11122

DRAWN	CHECKED	APPROVED	DATE	REV.
TLS	BB	KD	2/22/2012	0

DO NOT SCALE DRAWING | SCALE:1:131 | SHEET 3 OF 6

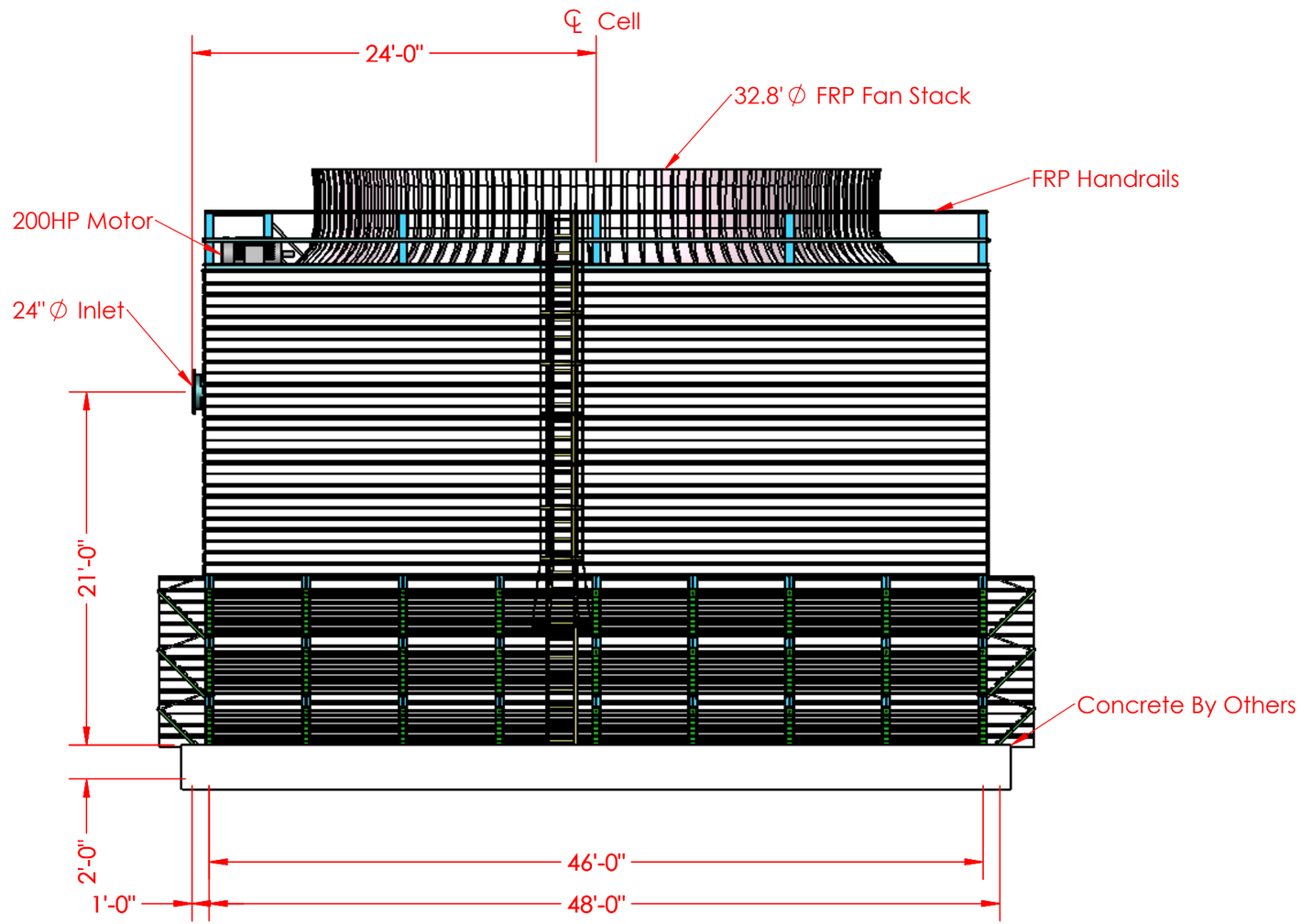

End View

DYNAMIS
IDAHO
2-FT-4646-200-P7-FM
GPM/CELL = 8500 ~ TOTAL GPM = 17000
97° F HWT ~ 71° F CWT ~ 63° F WBT

PROPRIETARY AND CONFIDENTIAL
THE INFORMATION CONTAINED IN THIS DRAWING IS THE SOLE PROPERTY OF COMPOSITE COOLING SOLUTIONS. ANY REPRODUCTION IN PART OR AS A WHOLE WITHOUT THE WRITTEN PERMISSION OF COMPOSITE COOLING SOLUTIONS IS PROHIBITED.

REVISION

NUM	DATE	DESCRIPTION	BY	CHK'D

CCSolutions Composite Cooling Solutions, L.P. **Composite Cooling Solutions**

General Arrangement
End View

DWG. NO. KD-11122

DRAWN	CHECKED	APPROVED	DATE	REV.
TLS	BB	KD	2/22/2012	0

DO NOT SCALE DRAWING | SCALE:1:99 | SHEET 4 OF 6

Donaldson
Filtration Solutions

Donaldson Company, Inc.
Industrial Air Filtration
1400 West 94th Street
Bloomington, MN
55431-2370

Mailing Address:
P.O. Box 1299
Minneapolis, MN
55440-1299 U.S.A.

Tel 952-887-3847
Fax 952-698-2479
www.Donaldson.com
www.donaldsontorit.com

Dynamis Energy, LLC
Attn: K. Patrick Silveira
Address: 776 E Riverside Drive, Suite 150

April 25, 2012

Reference: Dynamis Energy, LLC Emission Guarantee for a Donaldson® Torit® Model DFO 3-24 Dust Collector with Ultra-Web® Filters.

Equipment	One Donaldson Torit Model DFO 3-24 dust collector equipped with (24) Ultra-Web filters.
Application	Waste-to-Energy Facility
Dust	Flyash
Inlet Loading	< 2 gr/dscf
Air Volume	14,000 ACFM
Gas Stream	Operating temperature of 100°F with a maximum temperature of 150°F
Collector Location	Outdoors
Collector Exhaust	Outdoors

The Donaldson® Torit® Model DFO 3-24 Collector equipped with 24 Donaldson Torit Ultra-Web® filters offers a net filtration area of 4560 square feet. Dividing the actual air volume by the filtration area provides a net air-to-media ratio of 3.07:1. Based on the Donaldson Torit Model DFO 3-24 Collector being installed and operated in accordance with the DFO Installation, Operation, and Maintenance Manual; accepted industrial ventilation practices; and under the conditions stated above, we are offering the following emission guarantee utilizing Donaldson Torit Ultra-Web filters. This guarantee does not cover filter failure due to negligence or improper operation and specifically excludes failure due to exceeding the recommended air-to-media ratio; damage due to fire, corrosion, abrasion or physical abuse; wet or oily compressed air usage, or the lack of adequate compressed air for proper filter cleaning.

Emission: The maximum average particulate emissions in the discharge gas stream from the Donaldson Torit DFO 3-24 Collector using the Donaldson Torit Ultra-Web filters will not exceed 0.005 grains per dry standard cubic foot of particulate matter 2.5 microns or smaller over the life of the media.

The guarantee period ends after 4000 hours of operation or 12 months from the date of shipment, whichever is shorter. This provides ample time to confirm performance meets the stipulated thresholds in this document.

[The emissions portion of this warranty requires that all emission testing be performed by a qualified testing agency agreed upon by Donaldson Company and Dynamis Energy, LLC. Such testing will be performed in accordance with recognized testing procedures, agreed upon by both Donaldson Company and Dynamis Energy, LLC. Fees for the testing will be the responsibility of Dynamis Energy, LLC.]

Pressure Drop: Average pressure drop not to exceed 6.0 inches of water gauge on a continual basis as measured across Donaldson Torit Ultra-Web filter media and tube sheet of the Torit DFO 3-24 collector.

During the warranty period, Donaldson Company reserves the right to make any modifications, adjustments or take other necessary corrective actions, at Donaldson's expense, should the guarantee not be met by equipment malfunction due to defects in materials and/or workmanship as supplied by Donaldson Company. In no event shall Donaldson Company be liable for incidental, special or consequential damages resulting from nonconformity. Failure to use genuine Donaldson replacement parts or changes to the original system, either process or engineering, will cancel this guarantee.

Regards,

Hube Visee

IAF National Sales Director

Guarantee Number: 12CK0406 Dynamis Energy, LLC

Donaldson®
Torit®

Downflo® Oval Dust Collectors

POWERED BY
ULTRA-WEB®
High Efficiency Nanofiber Filters Built to Last

Donaldson

Downflo® Oval

A Family Of Over-Achievers

The high performance Downflo® Oval (DFO) family of over-achieving dust collectors provides up to 25 percent more filtration capacity than other same-sized cartridge collectors. Powered by patented Ultra-Web® nanofiber filtration technology, DFO delivers cleaner air, up to two times longer filter life, and greater cost savings.

The DFO advantage is found in the collector's patented design and components. The combination of a new cabinet design that greatly lowers cabinet velocities, patented Extra-Life™ cleaning technology, and Ultra-Web nanofiber filters allows more airflow through the collector without increasing the size of the footprint or damaging the filters.

A smaller collector helps lower the initial purchase price, reduces filter replacement costs and opens up valuable manufacturing floor space.

25% MORE CAPACITY

DFO Offers:

- **Lower initial cost per cubic foot of air per minute (cfm)**
- **Higher efficiency - cleaner air**
- **Lower pressure drop - greater energy savings**
- **Fewer filter changeouts**
- **Reduced filter disposal cost**
- **Easy system set-up**
- **Less maintenance**
- **10-year warranty**

DFO 3-18

Downflo® Oval

Outperforms All Other Collectors

DFO collectors offer some strong benefits that distinguish them from all other collectors available in the market today.

- **Easy to use** Quick-release handles provide easy cover removal and faster filter access.
- **Compact** Smaller footprints for applications that require maximum cleaning efficiency in even smaller spaces.
- **Powerful** DFO collectors provide 25 percent more capacity than same-sized dust collectors.
- **Cost effective** The patented ExtraLife™ Filter Cleaning System averages up to 30 percent increase in pulse cleaning energy for unmatched cleaning ability.
- **Innovative** Unique oval-shaped Ultra-Web® cartridge filters provide the longest filter life and highest filtration efficiency — which lowers cost.

DFO 2-4

DFO 3-3

Downflo® Oval

Sizes & Operations

Normal Operations For Models 1-1, 2-2 and 3-3

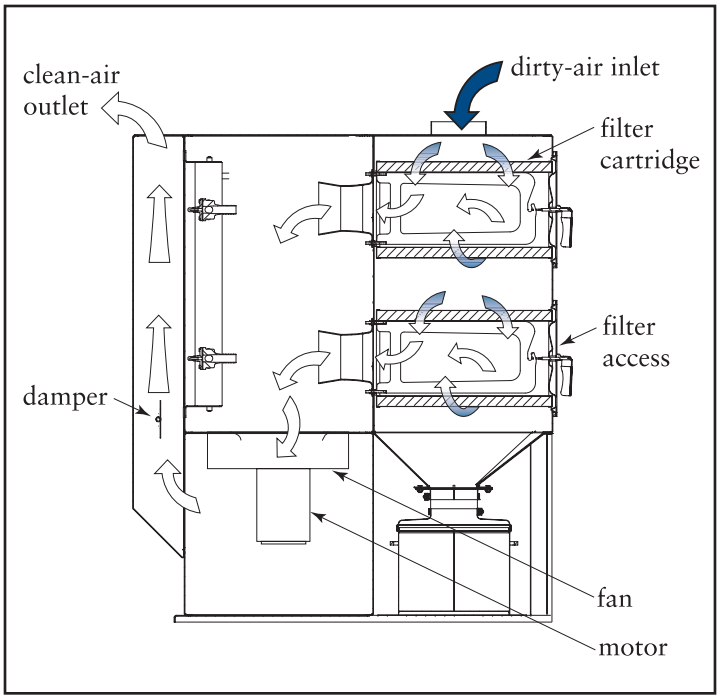

DFO 1-1

DFO Models 1-1, 2-2 and 3-3

- Incorporate several exclusive and unique features
- Completely self-contained, “plug-and-play” type units
- Packaged with power pack, controls, silencer, damper, dust container and more
- Remarkably quiet operation
- Exceptionally compact design
- Easily movable through standard aisles and doorways

Downflo® Oval

Sizes & Operations

Normal Operations For Models 2-4 Through 4-128

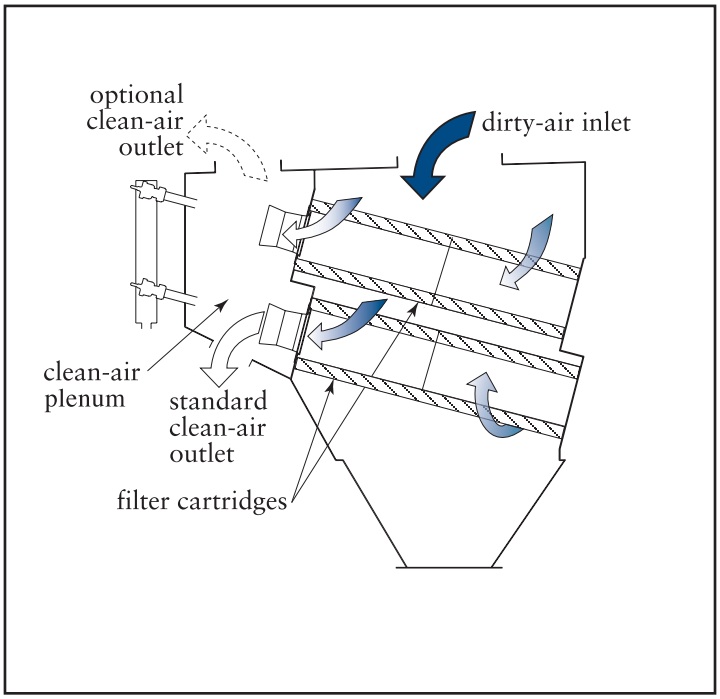

DFO Models 2-4 to 4-128

- 23 standard model sizes
- Customized sizes available
- Many options and accessories
- Exceptionally compact design
- Highest energy savings

Simply the Best

Dust Collectors Available

DFO Technology Unfolds

The Remarkable Story of DFO Begins with the Oval Cartridge and Patented Technology

Patented Technology That Performs Proven and patented Ultra-Web technology delivers longer filter life, cleaner air and greater cost savings than other types of cartridge filter media. Made with an electrospinning process that produces a very fine, continuous fiber of 0.2-0.3 micron in diameter, Ultra-Web nanofibers form a permanent web-like net with very fine interfiber spaces that trap dust on the surface of the media.

Nanofiber Media

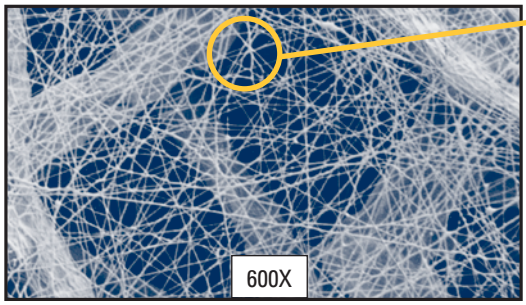

Nanofiber technology is available in all Ultra-Web and Fibra-Web filter cartridges.

10 micron

Commodity Filter Media

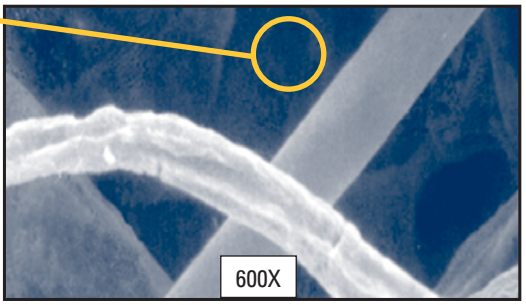

Conventional media has spaces of up to 60 microns between fibers, allowing dust to become deeply embedded.

The Innovation Continues with DFO's Shorter, Stiffer Filter Pleats

DFO Filter Media Pleats Shorter and stiffer filter pleats help minimize dust entrapment and simplify filter cleaning. By reducing the height of the filter pleats from the standard 2 inches to 1.5 inches, the pleat wall is less likely to collapse or bend, which can encapsulate dust and prevent its expulsion.

Downflo Oval Filter

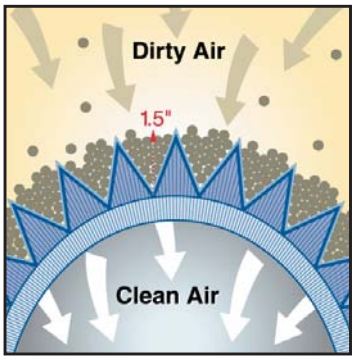

Standard Filter

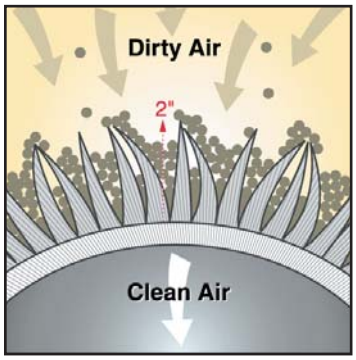

More Airflow, Less Filter Media

Unique Oval Shape Contributes to Higher Airflow Capacity

High Performance Filters The Downflo Oval filter design is a reflection of Donaldson Torit's commitment to technical research and development. Oval-shaped filters handle up to 25 percent more airflow without increasing velocities, which can cause filter abrasion. Sophisticated FLUENT®* Airflow Modeling Software revealed that oval-shaped cartridge filters have fewer areas of high velocity, resulting in a lower potential for media abrasion and increased filter life.

Downflo Oval Collector: 9145 cfm

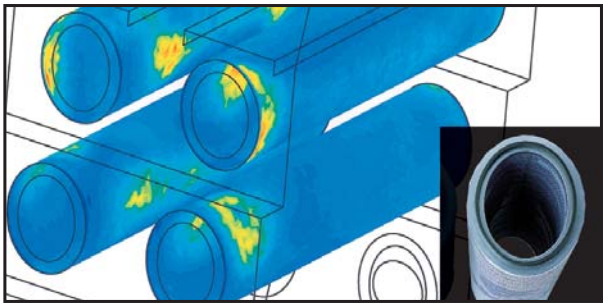

Standard Collector: 7315 cfm

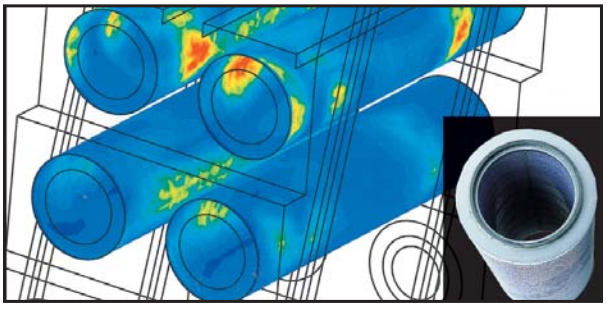

Airflow Breakthroughs Lead To A New Chapter In Filtration Performance

Sophisticated Modeling Computer modeling for fluid dynamics, structural mechanics and acoustics puts DFO models 1-1, 2-2, and 3-3 in a technical class all their own. The illustration below (left) shows how FLUENT Flow Modeling Software enhanced the uniform air velocity distribution through model DFO 3-3. ANSYS®* Structure Analysis Software shown below (right) demonstrates lowest stress levels and deflections for model DFO 3-3 under typical operating pressures.

DFO 3-3 Air Velocity Distribution

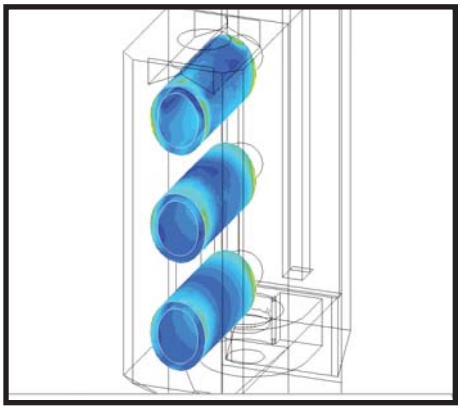

DFO 3-3 Stress and Deflections Model

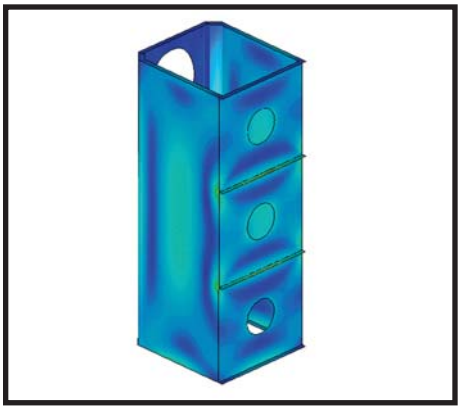

* FLUENT is a registered trademark of Fluent, Inc.; ANSYS is a registered trademark of ANSYS, Inc.

Downflo® Oval

Better Filtration, Prolonged Filter Life

Technical Discoveries Improve Filtration Performance And Prolonged Filter Life

Convex Side Walls A new cabinet design with convex side walls streamlines the airflow path and increases the cabinet's cross-sectional area. The convex side walls provide more space between filters, lower cabinet velocities and reduce the potential for media abrasion.

Cross-Sectional Areas

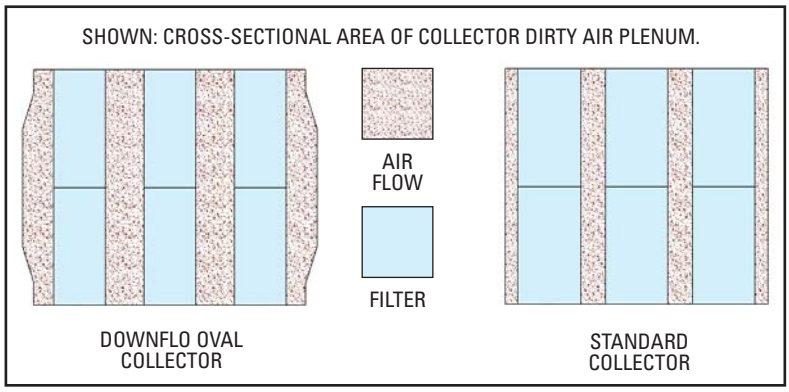

Pulse Cleaning Technology ExtraLife Filter Cleaning System uses proprietary, computer-modeled pulse cleaning technology to easily "pulse off" dust from the surface of the filter, improving filtration efficiency and prolonging filter life. The red lines in the illustration show the increased pressure at the front of the Downflo filter generated by the ExtraLife system. The blue line shows the pulse signature of a standard cartridge collector.

Downflo Pulse Pressure Gradients

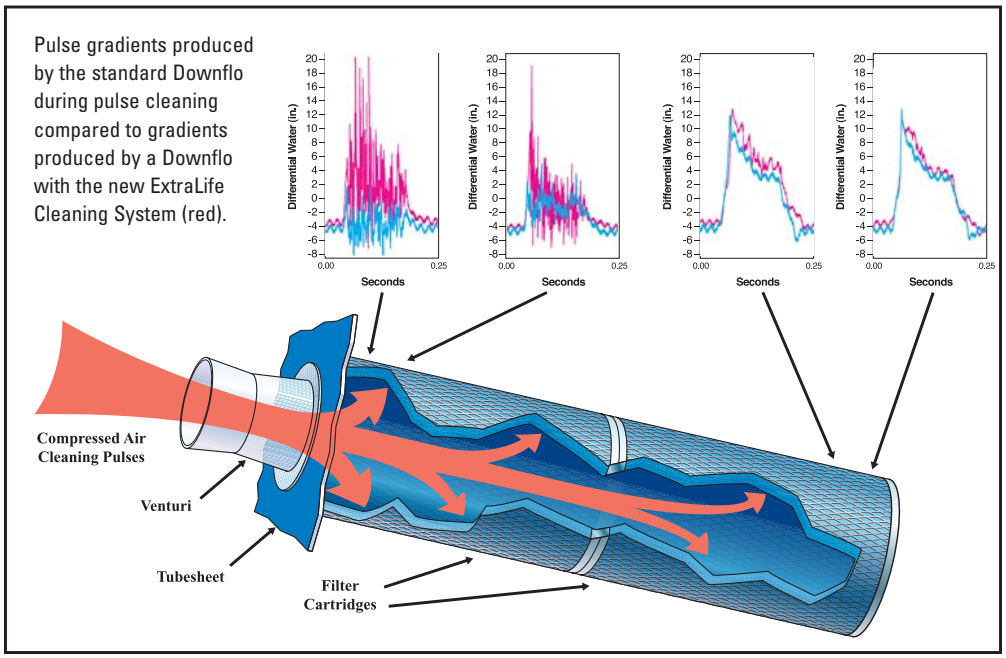

Filter Changes and Discharge Maintenance

Easy Maintenance With the new design of the DFO's quick-release access handles, filter removal and maintenance is extremely fast with one simple movement of the clamp.

Bag-In/Bag-Out Arrangements Improve filter changeouts and hopper discharge maintenance, help minimize worker exposure to potentially harmful dusts, and reduce exposure of contaminants to the atmosphere.

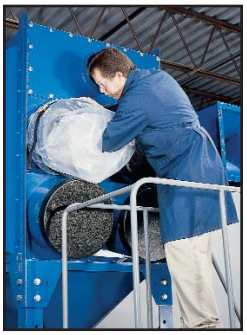

- Porthole covers protect changeout bags and provide a clean appearance.
- Heavy-duty plastic bags hold filters and function as gloves during the changeout procedure.
- Filters are disposed of in a sealed bag.
- Bag-in/Bag-Out drum arrangement is safely held in place through drum latches and hose clamps.

Downflo® Oval

Operating Advantages & Conditions

DFO Models	1-1	2-2	3-3	2-4 through 4-128
Horse Power	1.5	3	5	**
Sound Level dB(A)*	68	68	70	**
External Static Pressure ("wg)	***	***	***	**
Housing Construction (gauge)	12	12	12	10 (collector) 7 (tubesheet)
Housing Rating (inches H_2O)	-20	-20	-20	-20
Wind Load Rating (mph)	–	–	–	100
Seismic Rating (zone)	4	4	4	4
Compressed Air Required (psig)	60	60	60	2-4, 3-6: 60 2-8 and up: 90-100
Electrical Power Valves/Controls	120 VAC, 50/60 Hz	120 VAC, 50/60 Hz	120 VAC, 50/60 Hz	120 VAC, 50/60 Hz

* Sound measurements were taken in a hemianachoic chamber and under free field conditions and do not reflect the influences of actual operating environments. Standard sound pressure levels were taken at an operator position of 1.5 m high and 1 m from source.

** Provided through Donaldson Torit fan program.

*** See system performance curves on page 9.

Addressing Safety Concepts

Donaldson Torit manufactures or partners with experts to provide solutions for critical processes where harmful particulate must be controlled.

- Explosion Relief Panels (with or without weather domes)
- Suppression Systems
- Reinforced Housing Construction

U.S. Patents 6,364,921; 6,488,746; 6,387,162; 6,368,388; 4,395,269; 5,562,746; 5,882,379; 6,955,755; 6,924,028; 6,716,274; 6,743,273

System Curves For DFO Models 1-1, 2-2 and 3-3

Powerful Performance Unlike other technologies that require upgrades for more demanding applications, each DFO 1-1, 2-2 and 3-3 footprint comes standard with a unique high performance power pack. The system performance graphs below show the fan performance with clean filters. The curve indicates available external static pressure to the unit.

DFO 1-1 1.5HP 60Hz with 6 in. inlet duct (clean filter)

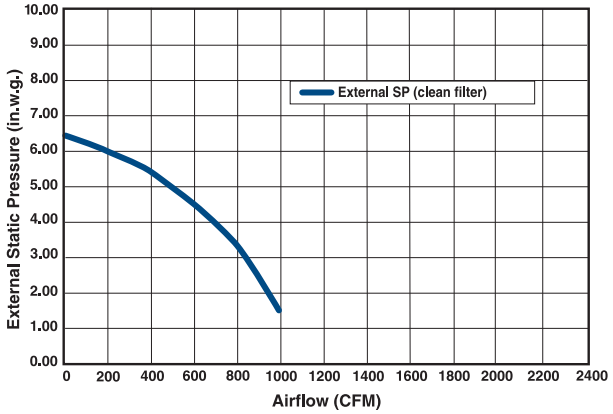

DFO 1-1 3HP 50Hz with 6 in. inlet duct (clean filter)

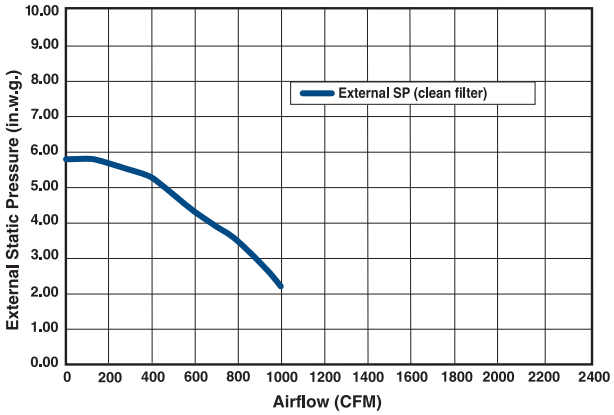

DFO 2-2 3HP 60Hz with 8 in. inlet duct (clean filters)

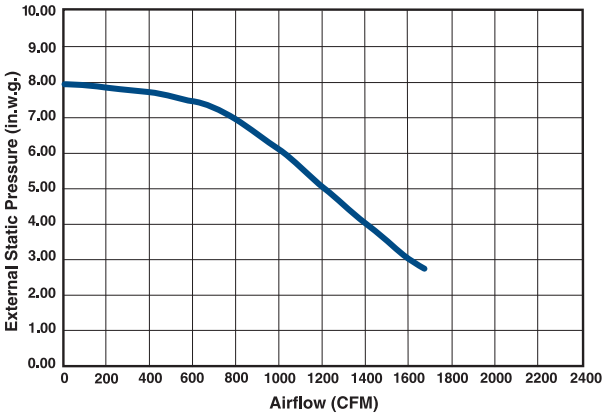

DFO 2-2 3HP 50Hz with 8 in. inlet duct (clean filters)

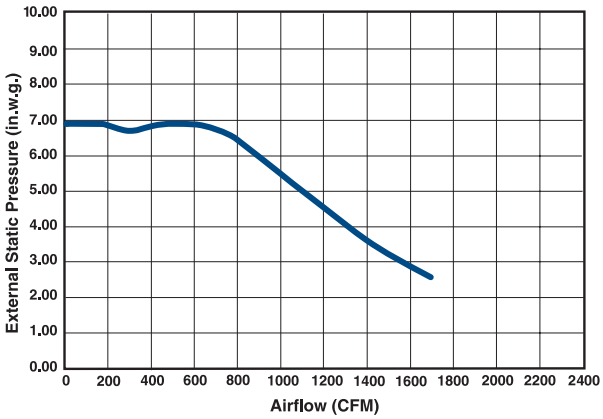

DFO 3-3 5HP 60Hz with 9 in. inlet duct (clean filters)

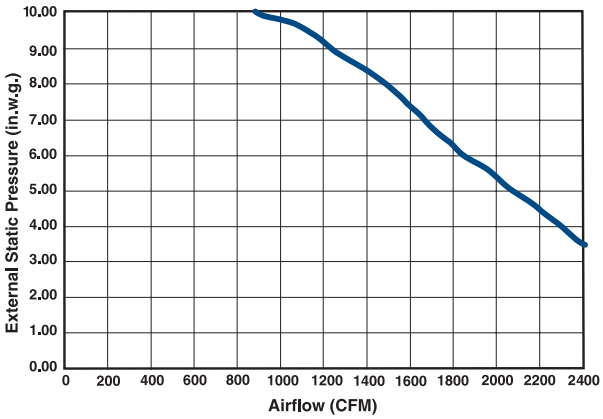

DFO 3-3 5HP 50Hz with 9 in. inlet duct (clean filters)

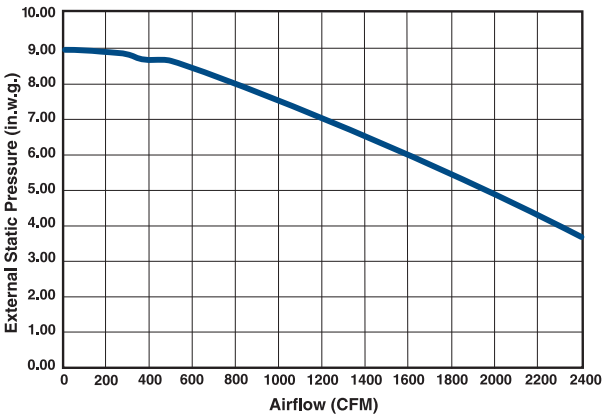

Downflo® Oval

Dimensions & Specifications

BASE MODULES 1-1, 2-2 & 3-3

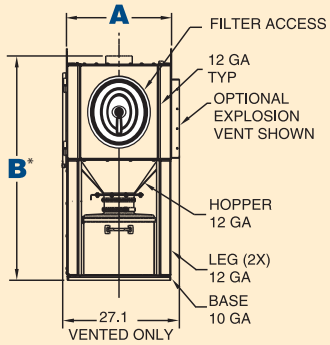

Front View
DFO 1-1

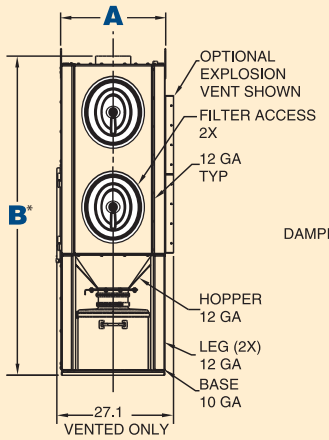

Front View
DFO 2-2

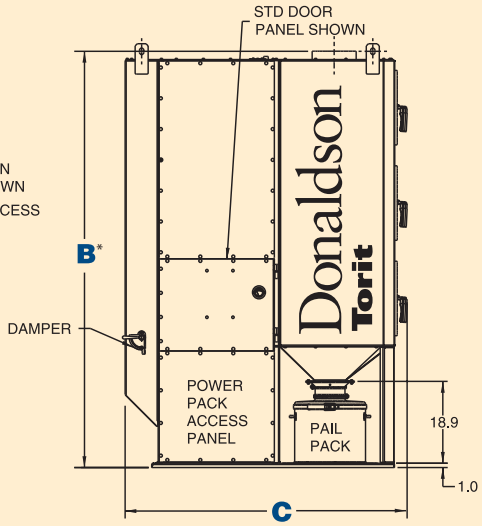

Left Side View
DFO 3-3

* Top of inlets.

BASE MODULES 2-4 THROUGH 4-128

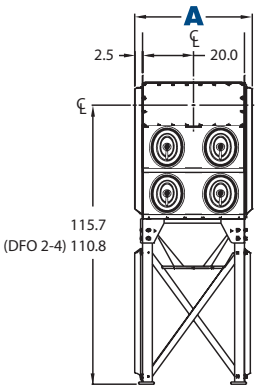

Front View
DFO 2-Models

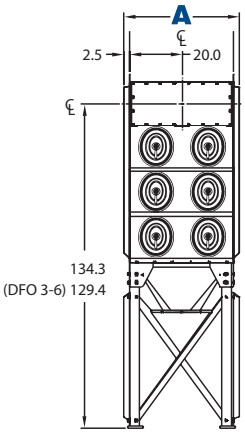

Front View
DFO 3-Models

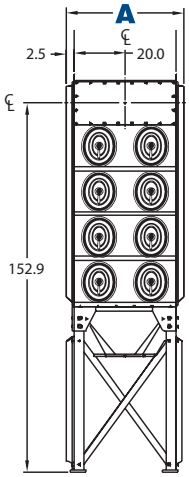

Front View
DFO 4-Models

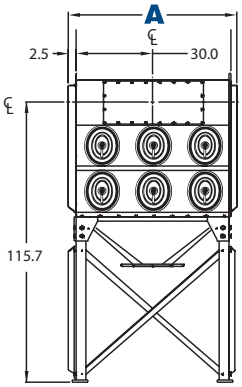

Front View
DFO 2-12
(3-Wide Models)

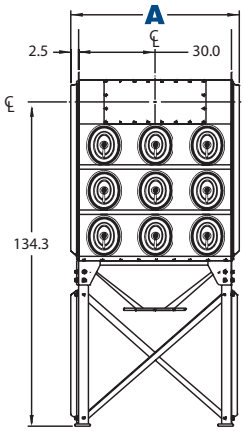

Front View
DFO 3-18
(3-Wide Models)

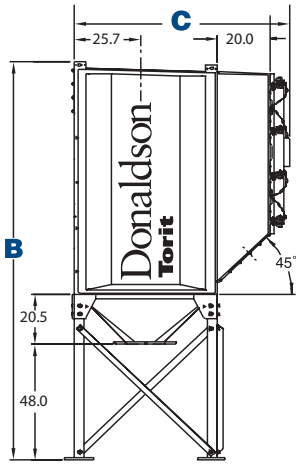

Right Side View
All Models

Downflo® Oval

Dimensions & Specifications

Model*	Nominal Airflow Range** (cfm)	No. of Filters	Ultra-Web Filter Area (ft^2)	No. of Valves	Shipping Weight (lbs)	Dimensions (inches) A	B	C
DFO 1 - 1	100-800	1	190	1	774	25.0	52.0	65.0
2 - 2	200-1,600	2	380	2	974	25.0	74.0	65.0
3 - 3	300-2,400	3	570	3	1,274	25.0	96.0	65.0
DFO 2 - 4	380-3,190	4	760	4	1,125	45.0	118.8	62.0
2 - 8	760-6,380	8	1,520	4	1,570	45.0	127.8	84.0
2 - 12	1,140-9,580	12	2,280	6	2,110	65.0	127.8	84.0
2 - 16	1,520-12,770	16	3,040	8	3,140	85.0	127.8	84.0
2 - 24	2,280-19,150	24	4,560	12	4,220	125.0	127.8	84.0
2 - 36	3,420-28,730	36	6,840	18	6,330	185.0	127.8	84.0
DFO 3 - 6	570-4,790	6	1,140	6	1,395	45.0	137.4	62.0
3 - 10	950-7,980	10	1,900	5	1,930	45.0	146.5	84.0
3 - 12	1,140-9,580	12	2,280	6	2,020	45.0	146.5	84.0
3 - 18	1,710-14,370	18	3,420	9	2,830	65.0	146.5	84.0
3 - 24	2,280-19,150	24	4,560	12	3,285	85.0	146.5	84.0
3 - 36	3,420-28,730	36	6,840	18	6,060	125.0	146.5	84.0
3 - 48	4,560-38,300	48	9,120	24	8,080	165.0	146.5	84.0
3 - 60	5,700-47,880	60	11,400	30	10,100	205.0	146.5	84.0
3 - 72	6,840-57,460	72	13,680	36	12,120	245.0	146.5	84.0
DFO 4 - 16	1,520-12,770	16	3,040	8	2,410	45.0	165.1	84.0
4 - 32	3,040-25,540	32	6,080	16	4,165	85.0	165.1	84.0
4 - 48	4,560-38,300	48	9,120	24	7,436	125.0	165.1	84.0
4 - 64	6,080-51,070	64	12,160	32	9,090	165.0	165.1	84.0
4 - 80	7,600-63,840	80	15,200	40	10,960	205.0	165.1	84.0
4 - 96	9,120-76,600	96	18,240	48	12,614	245.0	165.1	84.0
4 -112	10,640-89,380	112	21,280	56	14,455	285.0	165.1	84.0
4 -128	12,160-102,150	128	24,320	64	16,109	325.0	165.1	84.0

* The first number indicates number of filter rows, and the second number indicates number of cartridges.
** Based on clean filters.

Downflo® Oval

Proven Performance on Hundreds of Applications

DFO 4-112
on titanium grinding

DFO 4-48
on metal grinding

DFO 3-6
on sawing of high pressure hydaulic hose

DFO 2-4
on fiberglass routing & cutting

FILTRATION & SEPARATION
Product Achievement Awards
Product of the Year
2002
DFO

DFO 2-2
on paint pigment dust

Downflo® Oval

Standard Features & Equipment Options

DFO 1-1, 2-2, 3-3

	Standard	Optional
Collector Design		
Mild Steel Construction	✗	
Integral High Performance Power Packs	✗	
Ledge-Free Hopper	✗	
Inlet	✗	
Sprinkler Taps	✗	
ExtraLife™ Filter Cleaning System	✗	
Quick-Removal Access Covers	✗	
Integral Exhaust Silencer	✗	
Airflow Damper	✗	
Stainless Steel Construction		✗
Explosion Protected Models		✗
High Static Power Packs		✗
Inlet Damper		✗
Abrasion Resistant (AR) Inlet		✗
Sprinkler Heads		✗
Extraction Arms (7', 10', 14')		✗
Caster Packs		✗
Bag-Out Kit (Filter & Discharge)		✗
Bag-In/Bag-Out Kit (Filter & Discharge)		✗
Cartridge Filters		
Ultra-Web® (MERV 13)	✗	
Fibra-Web® (MERV 14); Ultra-Tek® (MERV 12); Thermo-Tek® (MERV 12); Torit-Tex™ (MERV 16)		✗
HEPA/ASHRAE Afterfilters		✗
Paint System		
Electrostatically applied powder coat TGIC polyester texture finish (2-mil dry film thickness) inside and out. Paint system passed 350-hr. salt spray test.	✗	
Custom Color		✗
Hostile Environment Coating		✗
Epoxy Coating		✗
Hopper Discharge		
10-Gallon Pail Pack	✗	
10-Gallon Pail Pack with Sealer Gear		✗
25-Gallon Dust Container		✗
Electrical Controls, Gauges, and Enclosures		
Minihelic®** Gauge	✗	
Manual or Automated Downtime Cleaning Controls	✗	
Solenoid Enclosure in NEMA 12	✗	
Continuous On-Demand Delta P Control		✗
Solenoid Enclosure NEMA 9		✗
Starter Controls		✗
Warranty		
10-Year Warranty	✗	

* The **Minimum Efficiency Reporting Value** (MERV) of this filter cartridge has been determined through independent laboratory testing using ASHRAE 52.2 (1999) test standards. The MERV rating was determined at a face velocity of 118 feet per minute and loading up to four inches water gauge. Actual efficiency of any filter cartridge will vary according to the specific application parameters. Dust concentration, airflow, particle characteristics, and pulse cleaning methods all affect filtration efficiency.

** Minihelic, Magnehelic and Photohelic are registered trademarks of Dwyer Instruments, Inc.

DFO 2-4 Thru 4-128

	Standard	Optional
Collector Design		
Mild Steel Construction	✗	
ExtraLife™ Filter Cleaning System	✗	
Quick-Removal Access Covers	✗	
Inlets	✗	
Ledge-Free Hopper	✗	
Sprinkler Taps	✗	
Stainless Steel Construction		✗
High Temperature Construction		✗
Explosion Protected Models		✗
Direct Drive Fans		✗
Chamber and Exhaust Silencers		✗
Abrasion Resistant (AR) Inlet		✗
Air Management Modules		✗
Extended Dirty Air Plenum		✗
Steep-Sided Hopper		✗
2-Mod Hopper		✗
Sprinkler Heads		✗
Service Platform (OSHA compliant)		✗
Damper Pack		✗
Drum Sentry™ Drum-Full Indicator		✗
Lined Clean Air Plenum		✗
Bag-Out Kit (Filter & Discharge)		✗
Bag-In/Bag-Out Kit (Filter & Discharge)		✗
Cartridge Filters		
Ultra-Web® (MERV 13)	✗	
Fibra-Web® (MERV 14); Ultra-Tek® (MERV 12); Thermo-Tek® (MERV 12); Torit-Tex™ (MERV 16)		✗
HEPA/ASHRAE Afterfilters		✗
Paint System		
Prime Coated Interior	✗	
Acrylic urethane finish over alkyd enamel primer. Paint system passes a 350-hr. salt spray test.	✗	
Custom Color		✗
Hostile Environment Coating		✗
Epoxy Coating		✗
Hopper Discharge		
Drum Cover and Hose		✗
Slide Gates		✗
Rotary Valves and Transitions		✗
Screw Conveyors		✗
Electrical Controls, Gauges, and Enclosures		
Control Box w/Timer in NEMA 4 Enclosure	✗	
Magnehelic®** Gauge	✗	
Delta P Control, Delta P Plus Control		✗
Dustronix™ Control Assembly		✗
Custom Panels		✗
Photohelic®* Gauge Standard and Weatherproof		✗
Basic Cold Climate Kit		✗
Heavy-Duty Cold Climate Kit		✗
Solenoid Enclosure (NEMA 7 & 9)		✗
Warranty		
10-Year Warranty	✗	

Information contained in this document is subject to change without notice.

Cleaner Air Worldwide

Better Technology

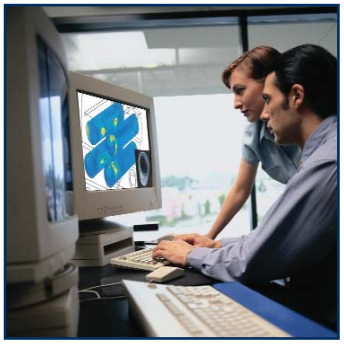

- 550 engineers worldwide
- More than 500 patents
- Broad range of innovative collectors and filters
- 100's of media formulations

Experience & Service

- Technical expertise and support
- Ready-to-ship filters and parts within 24 hours
- 1,000,000+ dust, fume, & mist collectors installed

Global Support

- Facilities in 35 countries
- 37 manufacturing plants and 11 distribution centers
- Sales offices worldwide

Donaldson®
Filtration Solutions

Donaldson Company, Inc.
Industrial Air Filtration
P.O. Box 1299
Minneapolis, MN
55440-1299 U.S.A.

Tel 800.365.1331
donaldsontorit@donaldson.com
www.donaldsontorit.com

Call Donaldson Torit to get Cleaner Air today 800-365-1331

ISO 9001:2000
FM 61768

Printed in USA

© Donaldson Company, 2002 Downflo Oval 06-2008

THIS DOCUMENT CONTAINS INFORMATION THAT IS CONFIDENTIAL AND/OR PROPRIETARY TO DONALDSON COMPANY, INC. ALL RIGHTS TO DISCLOSE, COPY, REPRODUCE, MANUFACTURE FROM OR DISPOSE OF THIS DOCUMENT OR ITS CONTENTS ARE RESERVED UNLESS SPECIFIED IN WRITING BY DONALDSON.

DWG NO.			
REV	ZONE	REVISION DESCRIPTION	APPROVAL/DATE
6		REVISED PICTORIALLY, REVISED MULTIPLE SPECS 2009A6128	JAS MAR 12, 2009

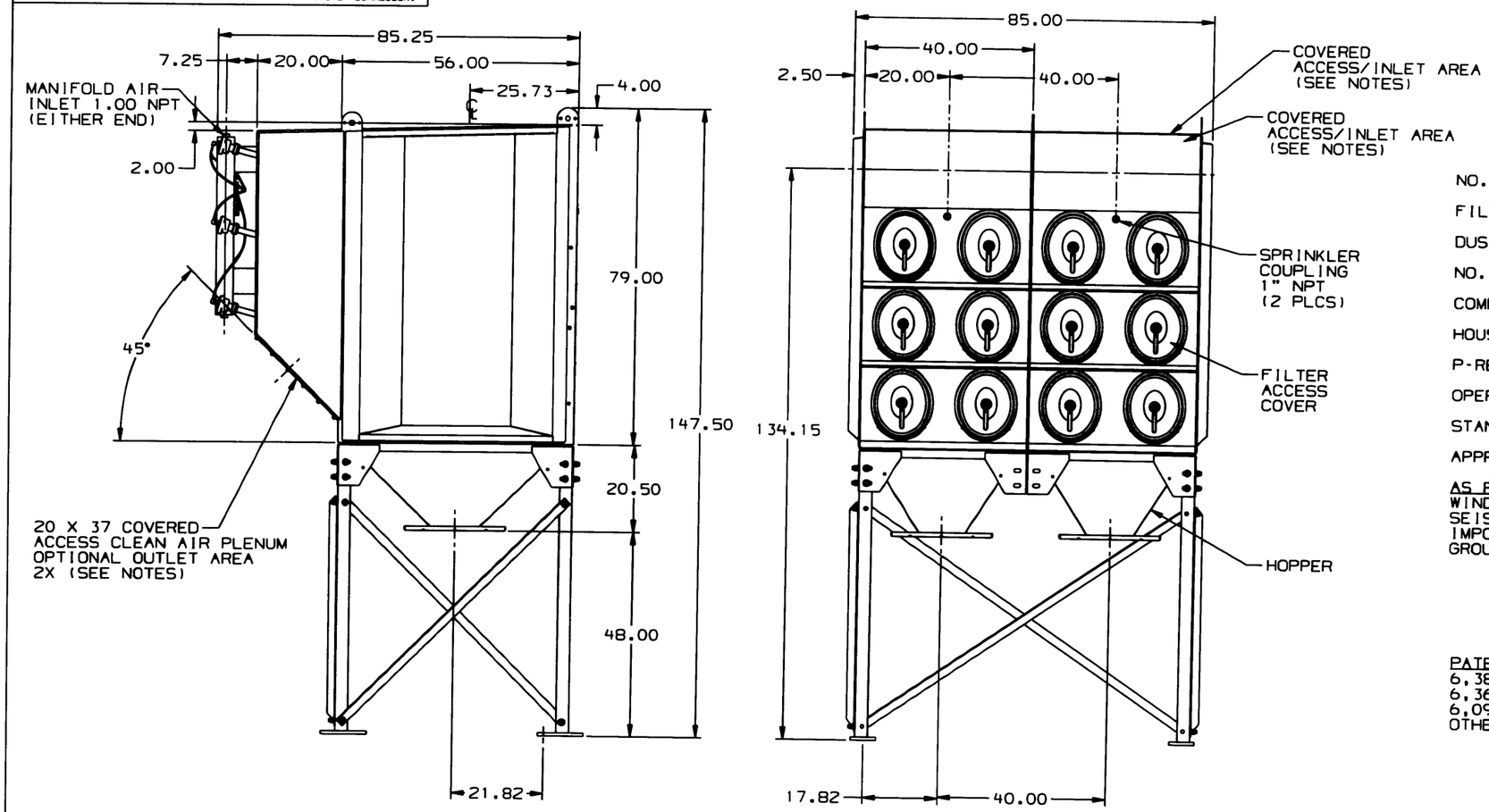

SPECIFICATIONS
MODEL DFO 3-24

NO. OF FILTERS	24
FILTER DIMENSIONS	11.4 x 14.4 OVAL X 26 LG.
DUST LOAD	40 LB PER CARTRIDGE DFO
NO. OF VALVES	12
COMPRESSED AIR REQUIRED	12 SCFM @ 90-100 PSIG
HOUSING RATING	-20" WG
P-RED	.40 BAR
OPERATING TEMP.	150°F MAX.
STANDARD FINISH	BLUE
APPROX WT	3285 LB.

AS PER IBC 2006 SPECIFICATIONS:
WIND: 90 MPH EXPOSURE C
SEISMIC SPECTRAL ACCELERATION, S_s=1.5 & S_1=0.6
IMPORTANCE FACTOR, I=1.0
GROUND SNOW LOAD, P_g=40 PSF

PATENT NUMBERS
6,387,162 6,488,746
6,364,921 6,368,388
6,090,173 5,562,746
OTHER PATENTS PENDING

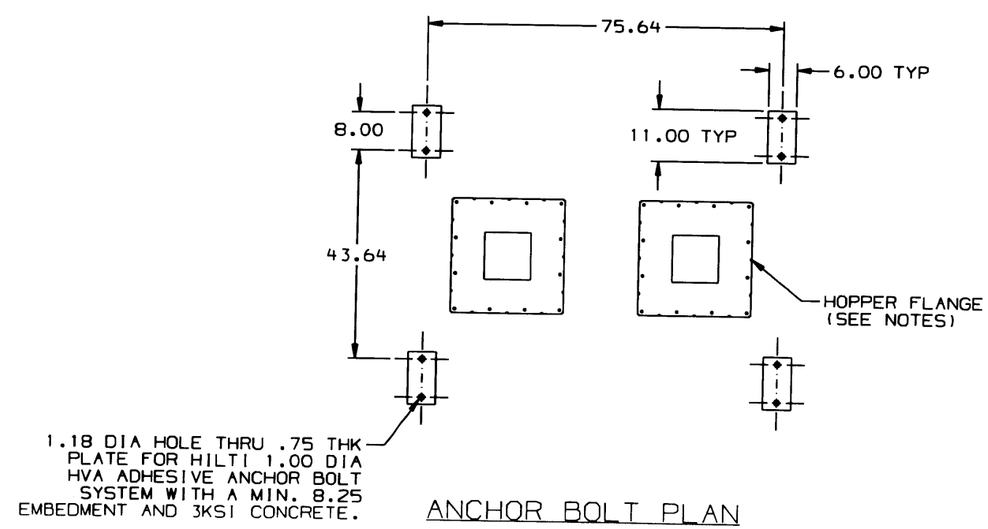

ANCHOR BOLT PLAN

NOTES:

1. SEE DFO 9337401 FOR INLET / OUTLET OPTIONS.
2. SEE DFO 9337301 FOR OPTIONS AND ACCESSORIES.
3. DO NOT INSTALL OR OPERATE THIS EQUIPMENT UNTIL HAVING READ AND UNDERSTOOD THE INSTRUCTIONS AND WARNINGS IN THE INSTALLATION AND OPERATION MANUAL. FOR A REPLACEMENT MANUAL CONTACT DONALDSON COMPANY, INC. (800) 365-1331.

THIS DOCUMENT IS NOT CERTIFIED FOR CONSTRUCTION PURPOSES AND IS SUBJECT TO CHANGE WITHOUT NOTICE.

TORIT DOWNFLO OVAL

MATERIAL	RELEASE NO. 2000A7012	TITLE DFO 3-24 DUST COLLECTOR WITH HOPPER AND LEGS	Donaldson Co. Inc. Minneapolis, MN USA
	DATE JUN 2000		
	EXP DATE		
	DWN G R NYGAARD	NUMBER DFO 9329804	
REFERENCE	DATE DEC 02, 1999		
	CHK R BICK		
	DATE DEC 1999	SCALE NONE / SHEET 1 OF 1	REVISION
PREVIOUS DRAWING NO.	APVD R BICK	C/C UG/CADD	6
DO NOT SCALE / TOLERANCES UNLESS OTHERWISE SPECIFIED 2 PL ± 3 PL ± ANGLES ± °	DATE DEC 1999	SECTIONAL SIZE / OUTLINE SIZE	IAF
	THIRD ANGLE PROJECTION	DESIGN CONTROL A004 / DWG LOCATION A101	VERSION A

COPYRIGHT © DONALDSON COMPANY, INC.

Part: 9329804_A_s_9329804_A_SECT_6 Date: 12-Mar-09 Time: 12:36

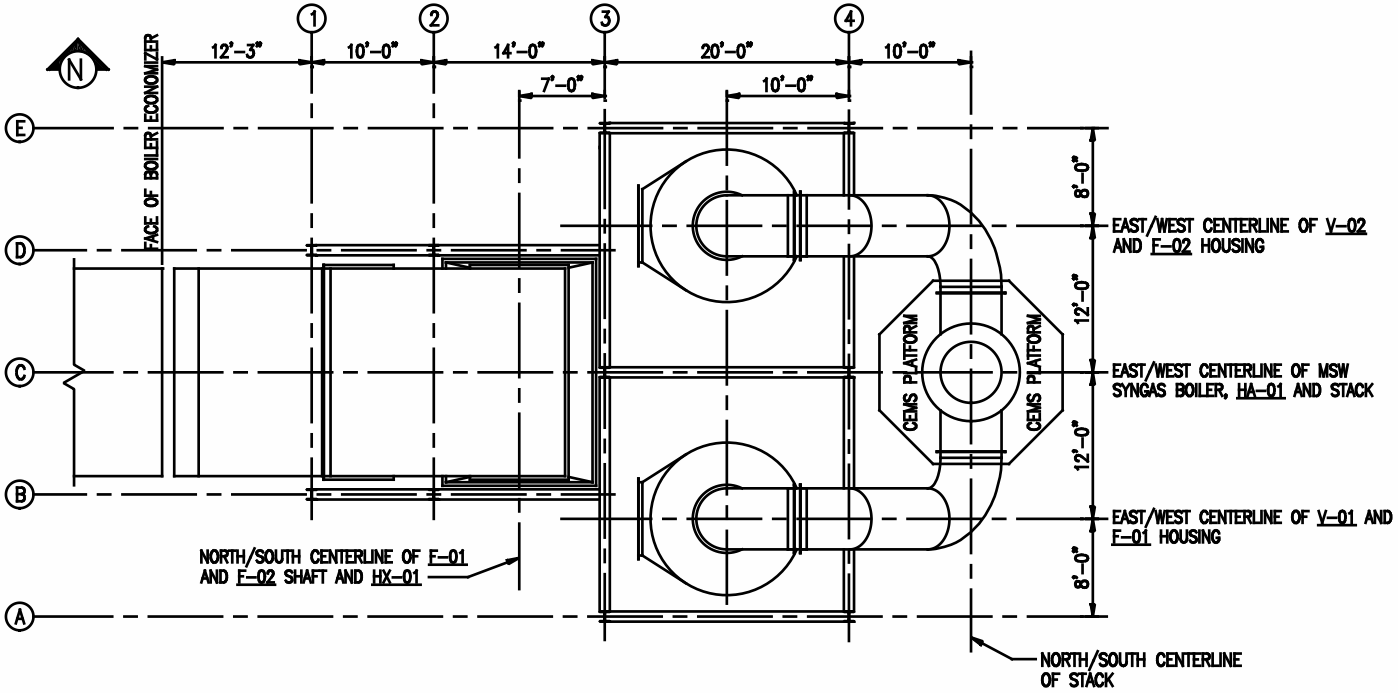
N
1
2
3
4
E
D
C
B
A
FACE OF BOILER ECONOMIZER
12'-3"
10'-0"
14'-0"
20'-0"
10'-0"
7'-0"
10'-0"
8'-0"
12'-0"
12'-0"
8'-0"
EAST/WEST CENTERLINE OF V-02 AND F-02 HOUSING
EAST/WEST CENTERLINE OF MSW SYNGAS BOILER, HA-01 AND STACK
EAST/WEST CENTERLINE OF V-01 AND F-01 HOUSING
CEMS PLATFORM
CEMS PLATFORM
NORTH/SOUTH CENTERLINE OF F-01 AND F-02 SHAFT AND HX-01
NORTH/SOUTH CENTERLINE OF STACK

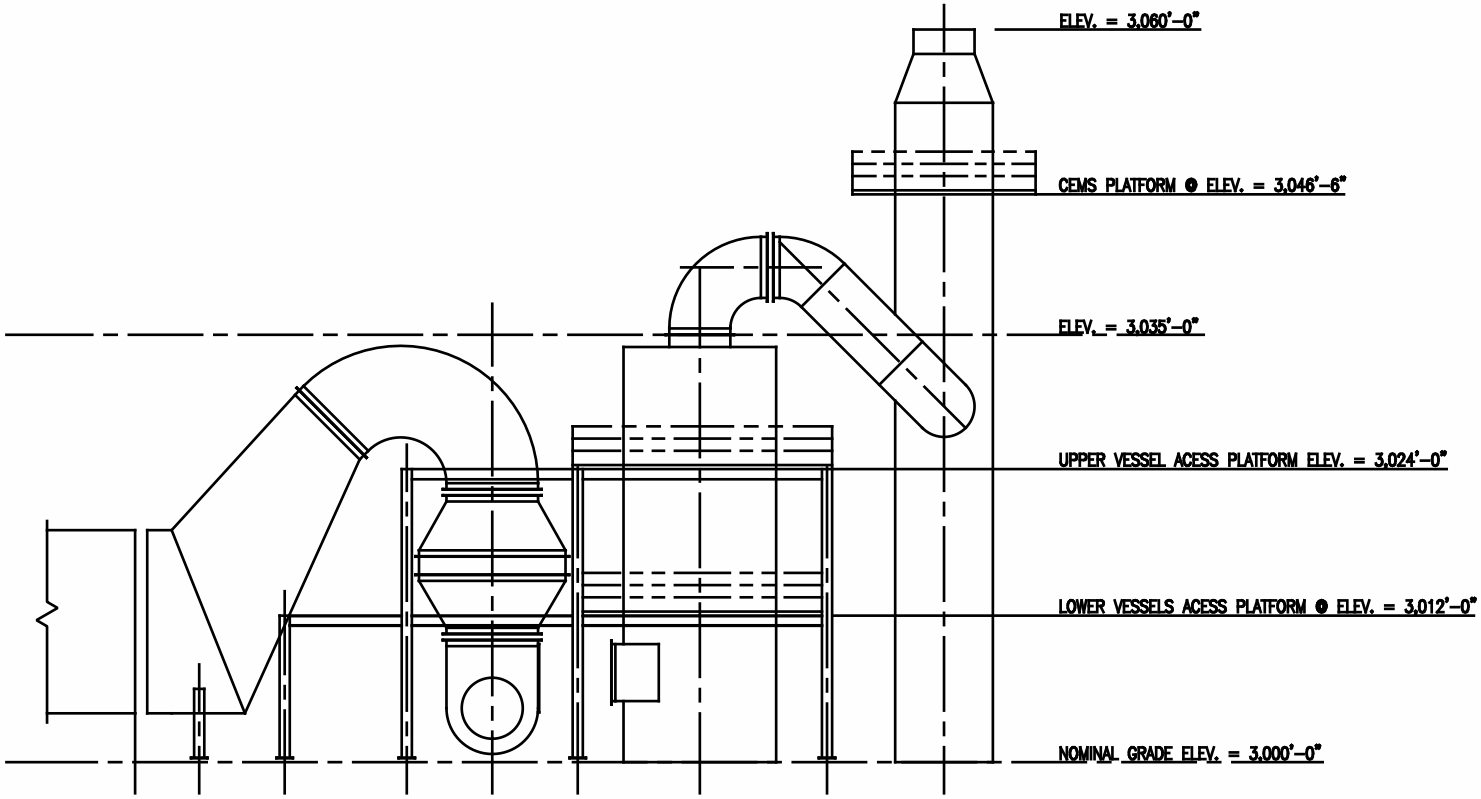
ELEV. = 3,060'-0"
CEMS PLATFORM @ ELEV. = 3,046'-6"
ELEV. = 3,035'-0"
UPPER VESSEL ACESS PLATFORM ELEV. = 3,024'-0"
LOWER VESSELS ACESS PLATFORM @ ELEV. = 3,012'-0"
NOMINAL GRADE ELEV. = 3,000'-0"

APPENDIX C

Emissions Inventory (also included on CD)

Dynamis Energy, LLC
Pilot WTE Facility

FACILITY POTENTIAL TO EMIT - CRITERIA POLLUTANTS

	Criteria Pollutants											
	NOx Emissions		CO Emissions		PM-10/PM-2.5 Emissions		SOx Emissions		VOC Emissions		Lead Emissions	
Description	**lb/hr**	**T/yr**	**lb/hr**	**T/yr**	**lb/hr**	**T/yr**	**lb/hr**	**T/yr**	**lb/hr**	**T/yr**	**lb/hr**	**T/yr**
Thermal Conversion Unit - Peak	29.93	87.38	10.90	31.83	3.66	10.68	8.54	24.94			0.03	0.09
Thermal Conversion Unit - OffPeak	4.41	6.44	1.61	0.54	0.54	0.79	1.26	1.84			0.00	0.01
Cooling Tower					0.02	0.08						
Ash System					0.45	1.97					5.10E-04	2.23E-03
Emergency Generator	1.30	0.33	0.26	0.07	0.03	0.01	0.98	0.25	1.19	0.30		
Ignition Systems	0.47	2.04	0.39	1.72	0.02	0.09	0.00	0.00	0.03	0.11	2.33E-06	1.02E-05
Total	**36.104**	**96.188**	**13.164**	**34.149**	**4.720**	**13.616**	**10.786**	**27.030**	**1.211**	**0.409**	**0.0358**	**0.099**

FACILITY POTENTIAL TO EMIT - TAPS (using Peak + Offpeak Emissions)

NON-CARCINOGENS (POUNDS PER HOUR)				
Pollutant	**CAS #**	**TAP Emissions (lb/hr)**	**Screening Level (lb/hr)**	**Modeling? (Y/N)**
Acrolein	107-02-8	1.13E-04	0.017	No
Aluminum	7429-90-5	1.08E-01	6.67E-01	No
Antimony	7440-36-0	1.13E-03	3.3E-02	No
Barium	7440-39-3	8.88E-04	3.3E-02	No
Chromium	7440-47-3	2.62E-03	3.3E-02	No
Cobalt	7440-48-4	1.84E-03	3.3E-03	No
Copper	7440-50-8	1.44E-03	6.7E-02	No
Ethylbenzene	100-41-4	0.00E+00	2.9E+01	No
Fluoride (as F) (Hydrogen Fl)	16984-48-8	8.83E+00	1.67E-01	Yes
Fluorene	7782-41-4	0.00E+00	1.67E-01	No
Hexane	110-54-3	8.40E-03	1.2E+01	No
Hydrogen Chloride	7647-01-0	1.19E+00	5.0E-02	Yes
Manganese	7439-96-5	9.60E-03	3.33E-01	No
Mercury	7439-97-6	3.56E-03	3.E-03	Yes
Molybdenum	7439-98-7	3.21E-03	3.33E-01	No
Naphthalene*	91-20-3	3.04E-06	9.10E-05	No
Pentane	109-66-0	1.21E-02	1.18E+02	No
Phosphorous	7723-14-0	2.66E-03	7.E-03	No
Selenium	7782-49-2	3.18E-03	1.3E-02	No
Silver	7440-22-4	2.92E-07	7.0E-03	No
Toluene	108-88-3	5.15E-04	2.5E+01	No
o-Xylene	1330-20-7	3.48E-04	2.9E+01	No
Zinc	7440-66-6	3.91E-01	6.67E-01	No

*Although listed as a noncarcinogen in the Rules, DEQ has determined that naphthalene is a possible/probable carcinogen. Compliance for naphthalene emissions should be based on the EL or AACC listed in Section 586 for PAH.

CARCINOGENS (POUNDS PER HOUR)				
Pollutant	**CAS #**	**TAP Emissions (lb/hr)**	**Screening Level (lb/hr)**	**Modeling? (Y/N)**
Acetaldehyde	75-07-0	9.37E-04	3.00E-03	No
Arsenic	7440-38-2	9.33E-07	1.50E-06	No
Benzene	71-43-2	1.15E-03	8.0E-04	Yes
Beryllium	7440-41-7	5.60E-08	2.8E-05	No
Cadmium	7440-43-9	4.98E-03	3.7E-06	Yes
Chromium VI	7440-47-3	0.00E+00	5.6E-07	No
Dioxin/Furan	1746-01-6	1.21E-06	1.50E-10	Yes
Formaldehyde	50-00-0	1.79E-03	5.1E-04	Yes
Nickel	7440-02-0	2.17E-02	2.7E-05	Yes
Benzo(a)pyrene	50-32-8	5.60E-09	2.0E-06	No
Benz(a)anthracene	56-55-3	8.40E-09	2.0E-06	No
Benzo(b)fluoranthene	205-82-3	8.40E-09	2.0E-06	No
Benzo(k)fluoranthene	205-99-2	8.40E-09	2.0E-06	No
Chrysene	218-01-9	8.40E-09	2.0E-06	No
Dibenzo(a,h)anthracene	53-70-3	5.60E-09	2.0E-06	No
Indeno(1,2,3-cd)pyrene	193-39-5	8.40E-09	2.0E-06	No
Total PAHs		2.45E-07	9.10E-05	No

Dynamis Energy WTE Facility
Thermal Conversion System
Thermal Conversion Unit

Total MSW Throughput =	367.2	tpd
Total MSW Throughput =	15.30	ton/hr
Total MSW Throughput =	30600	lb/hr
Peak Operating Hours =	5840	hr/yr
Off-Peak Operating Hours =	2920	hr/yr
Peak Exhaust Flow =	160,820	acfm @ 142F
Off-Peak Exhaust Flow =	37,000	acfm @ 146F

Hours	7am - 11pm	11pm-7am
Throughput (tpd)	342	25.2
Throughput (tph)	21.375	3.15

Pollutant Emission Factors	PM/PM10/ PM2.5 lb/ton	SO2 lb/ton	NOx lb/ton	CO lb/ton	Lead lb/ton
Thermal Conversion Unit Exhaust	0.29	1.39	1.4	0.51	1.44E-03

PM, NOx, CO, SO2, Lead Emission factor from source test averages
*SO2 Emission rate based on scrubber manufacturer guarantee of 71.25% control. PM2.5 emission rate based on scrubber manufacturere guarantee of 41%.

7am-11pm - PEAK

Pollutant	PM/PM10/PM2.5		SO_2		NOx		CO		Lead	
	lb/hr	tpy	lb/hr	tpy	lb/hr	tpy	lb/hr	tpy	lb/hr	tpy
Thermal Conversion Unit Exhaust Uncontrolled	6.20	18.10	29.71	86.76	29.93	87.38	10.90	31.83	0.03	0.09
Thermal Conversion Unit Exhaust Controlled	3.66	10.68	8.54	24.94	29.93	87.38	10.90	31.83	0.03	0.09
Controlled Boiler Stack Emissions (Thermal Unit + Ignition System)	3.68	10.74	8.54	24.94	30.39	88.74	11.29	32.98	0.03	0.09

11pm-7am - OFF PEAK

Pollutant	PM/PM10/PM2.5		SO_2		NOx		CO		Lead	
	lb/hr	tpy	lb/hr	tpy	lb/hr	tpy	lb/hr	tpy	lb/hr	tpy
Thermal Conversion Unit Exhaust Uncontrolled	0.91	1.33	4.38	6.39	4.41	6.44	1.61	0.54	0.00	0.01
Thermal Conversion Unit Exhaust Controlled	0.54	0.79	1.26	1.84	4.41	6.44	1.61	0.54	0.00	0.01
Controlled Boiler Stack Emissions (Thermal Unit + Ignition System)	0.56	0.82	1.26	1.84	4.88	7.12	2.00	1.11	0.00	0.01

TOXIC AIR POLLUTANTS (TAPs) CALCULATIONS

NON-CARCINOGENS (POUNDS PER HOUR)

Pollutant	CAS #	TAP Emission Factor (lb/ton)	Peak TAP Emissions (lb/hr)	Off-Peak TAP Emissions (lb/hr)	Total Peak/Off-Peak Emissions (lb/hr)	"24-hr"TAP Emissions (lb/hr)	Screening Level (lb/hr)	Modeling (based on peak + offpeak)? (Y/N)	Modeling (based on 24hr)? (Y/N)	Stack Emissions (Thermal Unit + Ignition System) PEAK lb/hr	PEAK tpy	OFF PEAK lb/hr	OFF PEAK tpy
Aluminium	7429-90-5	4.74E-04	1.01E-02	1.49E-03	1.16E-02	7.25E-03	6.67E-01	No	No				
Antimony	7440-36-0	4.60E-05	9.83E-04	1.45E-04	1.13E-03	7.03E-04	3.3E-02	No	No				
Barium	7440-39-3	1.23E-05	2.63E-04	3.88E-05	3.02E-04	1.88E-04	3.3E-02	No	No				
Chromium	7440-47-3	1.03E-04	2.20E-03	3.25E-04	2.53E-03	1.58E-03	3.3E-02	No	No				
Copper	7440-50-8	4.33E-05	9.26E-04	1.37E-04	1.06E-03	6.63E-04	6.7E-02	No	No				
Cobalt	7440-48-4	1.77E-05	3.79E-04	5.58E-05	4.35E-04	2.71E-04	3.3E-03	No	No				
Hydrogen Chloride	7647-01-0	See Note Below	5.95E-01	5.95E-01	1.19E+00	5.95E-01	5.0E-02	Yes	Yes	5.95E-01	1.74E+00	5.95E-01	8.69E-01
Hydrogen Flouride	NA	3.60E-01	7.70E+00	1.13E+00	8.83E+00	5.51E+00	1.7E-01	Yes	Yes	7.70E+00	2.25E+01	1.13E+00	1.66E+00
Manganese	7439-96-5	3.56E-04	7.60E-03	1.12E-03	8.72E-03	5.44E-03	3.33E-01	No	No				
Mercury	7439-97-6	1.45E-04	3.10E-03	4.57E-04	3.56E-03	2.22E-03	3.0.E-03	Yes	No				
Molybdenum	7439-98-7	1.30E-04	2.77E-03	4.09E-04	3.18E-03	1.98E-03	3.3.E-01	No	No				
Selenium	7782-49-2	1.30E-04	2.77E-03	4.09E-04	3.18E-03	1.98E-03	1.3E-02	No	No				
Zinc	7440-66-6	6.68E-03	1.43E-01	2.10E-02	1.64E-01	1.02E-01	6.67E-01	No	No				

*HCl emission rate of 0.595 lb/hr based on baghouse manufacturer guarantee
HF emission rate from spreadsheet developed by R. Kolb, Dynamis

CARCINOGENS (POUNDS PER HOUR)

Pollutant	CAS #	TAP Emission Factor (lb/ton)	Peak TAP Emissions (lb/hr)	Off-Peak TAP Emissions (lb/hr)	Total Peak/Off-Peak Emissions (lb/hr)	"24-hr"TAP Emissions (lb/hr)	Screening Level (lb/hr)	Modeling (based on peak + offpeak)? (Y/N)	Modeling (based on 24hr)? (Y/N)	PEAK lb/hr	PEAK tpy	OFF PEAK lb/hr	OFF PEAK tpy
Arsenic		0.00E+00	0.00E+00	0.00E+00	0.00E+00	0.00E+00	1.50E-06	No	No				
Cadmium	7440-43-9	2.02E-04	4.33E-03	6.37E-04	4.96E-03	3.10E-03	3.7E-06	Yes	Yes	4.33E-03	1.26E-02	6.37E-04	9.31E-04
Dioxin/Furan		4.95E-08	1.06E-06	1.56E-07	1.21E-06	7.57E-07	1.50E-10	Yes	Yes	1.06E-06	3.09E-06	1.56E-07	2.28E-07
Nickel	7440-02-0	8.81E-04	1.88E-02	2.78E-03	2.16E-02	1.35E-02	2.7E-05	Yes	Yes	1.92E-02	5.60E-02	3.13E-03	4.56E-03

TAPs Emission factor from source test averages

Dynamis Energy WTE Facility
Thermal Conversion System - Hidden Hollow Landfill
Thermal Conversion Units - Ignition Systems HAPs

TOXIC AIR POLLUTANTS (TAPs) COMBUSTION CALCULATIONS
NATURAL GAS

Emission Unit	Fuel Usage
Primary Chamber Ignition	4,664.71 scf/hr

NON-CARCINOGENS (POUNDS PER HOUR)

Pollutant	CAS #	EF for NG Combustion (lb/10^6 scf)[a]	TAP Emissions (lb/hr)	Screening Level (lb/hr)	Modeling? (Y/N)
Antimony	7440-36-0	0.0E+00	0.00E+00	3.3E-02	No
Barium	7440-39-3	4.4E-03	2.05E-05	3.3E-02	No
Chromium	7440-47-3	1.4E-03	6.53E-06	3.3E-02	No
Cobalt	7440-48-4	8.4E-05	3.92E-07	3.3E-03	No
Copper	7440-50-8	8.5E-04	3.97E-06	6.7E-02	No
Ethylbenzene	100-41-4	0.0E+00	0.00E+00	2.9E+01	No
Fluoride (as F)	16984-48-8	0.0E+00	0.00E+00	1.67E-01	No
Hexane	110-54-3	1.8E+00	8.40E-03	1.2E+01	No
Manganese	7439-96-5	3.8E-04	1.77E-06	3.33E-01	No
Mercury	7439-97-6	2.6E-04	1.21E-06	3.E-03	No
Molybdenum	7439-98-7	1.1E-03	5.13E-06	3.33E-01	No
Naphthalene	91-20-3	6.1E-04	2.85E-06	3.33E+00	No
Pentane	109-66-0	2.6E+00	1.21E-02	1.18E+02	No
Phosphorous	7723-14-0	0.0E+00	0.00E+00	7.E-03	No
Selenium	7782-49-2	2.4E-05	1.12E-07	1.3E-02	No
1,1,1-Trichloroethane	71-55-6	0.0E+00	0.00E+00	1.27E+02	No
Toluene	108-88-3	3.4E-03	1.59E-05	2.5E+01	No
o-Xylene	1330-20-7	0.0E+00	0.00E+00	2.9E+01	No
Zinc	7440-66-6	2.9E-02	1.35E-04	6.67E-01	No

CARCINOGENS (POUNDS PER HOUR)

Pollutant	CAS #	EF for Natural Gas Combustion (lb/10^6 scf)[a]	TAP Emissions (lb/hr)	Screening Level (lb/hr)	Modeling? (Y/N)	Peak (tpy)	Off peak (tpy)
Arsenic	7440-38-2	2.0E-04	9.33E-07	1.5E-06	No		
Benzene	71-43-2	2.1E-03	9.80E-06	8.0E-04	No	2.86E-05	1.43E-05
Beryllium	7440-41-7	1.2E-05	5.60E-08	2.8E-05	No		
Cadmium	7440-43-9	1.1E-03	5.13E-06	3.7E-06	Yes		
Chromium VI	7440-47-3	0.0E+00	0.00E+00	5.6E-07	No		
Formaldehyde	50-00-0	7.5E-02	3.50E-04	5.1E-04	No	1.02E-03	5.11E-04
Nickel	7440-02-0	2.1E-03	9.8E-06	2.7E-05	No	2.86E-05	1.43E-05
Benzo(a)pyrene	50-32-8	1.2E-06	5.60E-09	2.0E-06	No		
Benz(a)anthracene	56-55-3	1.8E-06	8.40E-09	NA	No		
Benzo(b)fluoranthene	205-82-3	1.8E-06	8.40E-09	NA	No		
Benzo(k)fluoranthene	205-99-2	1.8E-06	8.40E-09	NA	No		
Chrysene	218-01-9	1.8E-06	8.40E-09	NA	No		
Dibenzo(a,h)anthracene	53-70-3	1.2E-06	5.60E-09	NA	No		
Indeno(1,2,3-cd)pyrene	193-39-5	1.8E-06	8.4E-09	NA	No		
Total PAHs		1.1E-05	5.32E-08	2.00E-06	No		

[a]EFs from AP-42, Tables 1.4-3 and 1.4-4, 7/98
[b]EFs from AP-42, Table 1.3-10, 9/98

Dynamis Energy WTE Facility
Thermal Conversion System - Hidden Hollow Landfill
Thermal Conversion Units - Ignition Systems Criteria Pollutants

Primary gasification ignition systems will operate on natural gas. Primary chamber ignition will be evenly distributed throughout the day; independent of MSW throughput and peak/off-peak operation.

CRITERIA POLLUTANT COMBUSTION CALCULATIONS
NATURAL GAS

Emission Unit	Fuel Usage		Conversions	
Primary Chamber Ignition (total)	111,953 scf/day		40862845	1020 MMBtu/10^6 scf
Primary Chamber Ignition (total)	4.76 MMBtu/hr			

Emission Factors

NOx	100 lb/10^6 scf	AP-42, Table 1.4-1, 1998
CO	84 lb/10^6 scf	AP-42, Table 1.4-1, 1998
PM-10	7.6 lb/10^6 scf	AP-42, Table 1.4-2, 1998
SOx	0.6 lb/10^6 scf	AP-42, Table 1.4-2, 1998
VOC	5.5 lb/10^6 scf	AP-42, Table 1.4-2, 1998
Lead	0.0005 lb/10^6 scf	AP-42, Table 1.4-2, 1998

Description	Capacity (MMBtu/hr)	Throughput (scf/hr)	Pounds per Hour					
			NOx Emissions (lb/hr)	CO Emissions (lb/hr)	PM-10/PM-2.5 Emissions (lb/hr)	SOx Emissions (lb/hr)	VOC Emissions (lb/hr)	Lead Emissions (lb/hr)
Primary Chamber Ignitions - Uncontrolled	4.76	4,665	0.4665	0.3918	0.0355	0.0028	0.0257	0.0000023
Primary Chamber Ignitions - Controlled	4.76	4,665	0.4665	0.3918	0.0209	0.0008	0.0257	0.0000023

*SO2 Emission rate based on scrubber manufacturer guarantee of 71.25% control. PM2.5 emission rate based on scrubber manufacturere guarantee of 41%.

Description	Capacity (MMBtu/hr)	Throughput (scf/yr)	Ton per Year					
			Emissions (T/yr)	Emissions (T/yr)	Emissions (T/yr)	Emissions (T/yr)	Emissions (T/yr)	Emissions (T/yr)
Primary Chamber Ignitions - Uncontrolled	4.76	4,665	2.04	1.72	0.16	0.01	0.11	1.02E-05
Primary Chamber Ignitions - Controlled (Peak)	4.76	4,665	1.36	1.14	0.06	0.00	0.07	0.00
Primary Chamber Ignitions - Controlled (Off-Peak)	4.76	4,665	0.68	0.57	0.03	0.00	0.04	0.00

Dynamis Energy WTE Facility
Thermal Conversion System - Hidden Hollow Landfill
Emergency Generator

Caterpillar 300 kW Standby C9 Tier 3 Certified Generator

Combustion Source	kW	hp	Hours of Operation	Emission Factors (g/hp-hr)					
				PM[1]	NOx[1]	SO_2[2]	CO[1]	VOC[3]	HC[1]
300 kW Gen	300	480.00	500	0.033	4.110	0.0021	0.250	0.0025	0.06

1. Manufacturer specific emisions factors. Generator is EPA Certified Tier 3. Horsepower shown in manufacturer specified max horsepower.
2. Emission Factor Reference for SO2: AP-42, 5 th Edition, Table 3.3-1, 0.5% sulfur fuel, units are lb/hp-hr
3. Emission Factor Reference for VOC: AP-42, 5 th Edition, Table 3.3-1, units are lb/hp-hr

Combustion Source	kW	hp	Hours of Operation	Emission Rates											
				PM/ PM_{10}/ $PM_{2.5}$		NOx		SO_2		CO		VOC		HC	
				lb/hr	tpy	lb/hr	tpy	lb/hr	tpy	lb/hr	tpy	lb/hr	tpy	lb/hr	tpy
300 kW Gen	300	480.00	500	0.035	0.01	1.302	0.33	0.984	0.25	0.264	0.07	1.186	0.30	0.06336	0.01584
			Total	***0.035***	***0.009***	***1.302***	***0.326***	***0.984***	***0.246***	***0.264***	***0.066***	***1.186***	***0.296***	***0.063***	***0.016***

HAPS

Combustion Source	kW	hp	Hours of Operation	Emission Factors (lb/MMBtu)							
				Benzene	CH2O	Toluene	Xylenes	Propylene	Acetald.	Acrolein	Total PAH
300 kW Gen	300	480.00	500	9.330E-04	1.18E-03	4.090E-04	2.850E-04	2.580E-03	7.670E-04	9.250E-05	1.68E-04

Emission Factor Reference AP-42, 5th Edition Table 3.3-2
CH2O = Formaldehyde

Combustion Source	kW	hp	MMBtu/hr	Hours of Operation	Emission Rates															
					Benzene		CH2O		Toluene		Xylenes		Propylene		Acetaldehyde		Acrolein		Total PAH	
					lb/hr	tpy	lb/hr	tpy	lb/hr	tpy	lb/hr	tpy	lb/hr	tpy	lb/hr	tpy	lb/hr	tpy	lb/hr	tpy
300 kW Gen	300	480.00	1.22	500	0.001	0.000	0.001	0.000	0.000	0.000	0.000	0.000	0.003	0.001	0.001	0.0002	0.000	0.0000	0.000	0.0000
			Total	***500***	***0.001***	***2.85E-04***	***0.001***	***3.60E-04***	***0.000***	***0.000***	***0.000***	***0.000***	***0.003***	***0.001***	***0.001***	***0.000***	***0.000***	***0.000***	***0.000***	***0.000***

Dynamis Energy WTE Facility
Thermal Conversion System - Hidden Hollow Landfill
Cooling Towers

Induced Draft Cooling Towers

Total Make-up to Unit:	470 gpm	
Evaporation Loss:	372 gpm	Cooling towers will operate at the same rates for both peak and off-peak thermal unit/boiler operation
Drift Loss:	0.26 gpm	
Blowdown:	92 gpm	

Cooling Tower Emissions

	Total Liquid Drift Factor (lb/1000 gal)[b]	TDS Content Fraction	Emission Factor (lb/1000 gal)	Evaporation Rate (gal/hr)	PM/PM-10[a] Emission Rate lb/hr (lb/hr)	PM/PM-10[a] Emission Rate tpy[b] (tpy)
Cooling Tower	1.7	0.000470	0.000799	22,320	0.02	0.08
Total					**0.02**	**0.08**

[a]PM-10 emission factor assumed to be equal to PM emission factor. Assume PM2.5 = PM10.
[b]AP-42 Table 13.4-1 Total liquid drift for induced draft tower
TDS content in water from water analysis of makeup water.

Dynamis Energy WTE Facility
Thermal Conversion System - Hidden Hollow Landfill
Ash Handling System

Total Ash Throughput =	10% of total waste throughput
Total Ash Throughput =	40.8 tpd
Total Ash Throughput =	3400 lb/hr
Baghouse Flow Rate =	14,000 cfm

Baghouse Control System
Manufacturer guarantee of PM2.5 Emissions = 0.005 grain/cf

Assume 5% of ash becomes airborne particulate (rest is glass, metal pieces, or large non airborne ash particles collected for use). Assume PM2.5=PM10=0.75PM

Ash System Emissions	PM10/PM2.5	
	lb/hr	tpy
Uncontrolled	127.50	558.45
Controlled	0.45	1.97

			Emissions		
TCLP Results	**(mg/kg)**	**%**	**(lb/ton)**	**lb/hr**	**tpy**
Ag	0.18666667	0%	0.000	2.92095E-07	1.27938E-06
Al	61625	21%	123.507	0.096430551	0.422365815
As	NA	NA	NA	NA	NA
B	305.25	0%	0.612	0.000477654	0.002092124
Ba	361.237778	0%	0.724	0.000565263	0.002475854
Be	NA	NA	NA	NA	NA
Bi	NA	NA	NA	NA	NA
Ca	49712.5	17%	99.632	0.077789919	0.340719847
Cd	9.27944444	0%	0.019	1.45204E-05	6.35995E-05
Co	896	0%	1.796	0.001402057	0.00614101
Cr	54.4244444	0%	0.109	8.51632E-05	0.000373015
Cu	239.5	0%	0.480	0.000374769	0.001641487
Fe	15662.5	5%	31.390	0.024508617	0.107347742
Hg	NA	NA	NA	NA	NA
K	NA	NA	NA	NA	NA
Li	50	0%	0.100	7.82398E-05	0.00034269
Mg	6275	2%	12.576	0.009819095	0.043007635
Mn	557.5	0%	1.117	0.000872374	0.003820997
Mo	13.525	0%	0.027	2.11639E-05	9.26977E-05
Na	4262.5	1%	8.543	0.006669943	0.029214349
Ni	37.75	0%	0.076	5.9071E-05	0.000258731
p	1700	1%	3.407	0.002660153	0.011651471
Pb	325.775556	0%	0.653	0.000509772	0.002232803
Sb	NA	NA	NA	NA	NA
Se	NA	NA	NA	NA	NA
Sr	150.625	0%	0.302	0.000235697	0.001032355
Th	NA	NA	NA	NA	NA
V	38.875	0%	0.078	6.08314E-05	0.000266442
Zn	145300	51%	291.206	0.227364854	0.995858058
Total	287577.4	100%		0.45	1.971

APPENDIX D

DEQ Modeling Forms

DEQ AIR QUALITY PROGRAM
1410 N. Hilton, Boise, ID 83706
For assistance, call the
Air Permit Hotline - 1-877-5PERMIT

PERMIT TO CONSTRUCT APPLICATION
Revision 3
4/5/2007

Please see instructions on page 2 before filling out the form.

Company Name:	Dynamis Energy, LLC
Facility Name:	Hidden Hollow Waste-To-Energy (WTE) Facility
Facility ID No.:	
Brief Project Description:	Municipal solid waste thermal conversion facility located at the Ada County Landfill

SUMMARY OF AIR IMPACT ANALYSIS RESULTS - CRITERIA POLLUTANTS

				2.	3.	4.		5.
Criteria Pollutants	**Averaging Period**	**Significant Impact Analysis Results (µg/m3)**	**Significant Contribution Level (µg/m3)**	**Full Impact Analysis Results (µg/m3)**	**Background Concentration (µg/m3)**	**Total Ambient Impact (µg/m3)**	**NAAQS (µg/m3)**	**Percent of NAAQS**
$PM_{2.5}$	24-hour	8.38	1.2	8.38	19.30	27.68	35	79%
	Annual	1.54	0.3	1.55	6.30	7.85	15	52%
PM_{10}	24-hr	5.20	5	5.20	73.00	78.20	150	52%
SO_2	1-hr	53.02	7.9	53.03	33.10	86.13	196	44%
	Annual	0.95	1	0.95	2.60	3.55	80	4%
NO_2	1-hr	110.20	7.5	213.39	Variable	213.39	188	114%
	Annual	3.54	1	3.58	40.00	43.58	100	44%
CO	1-hr	n/a	2000	n/a	n/a	n/a	10000	n/a
	8-hr	n/a	500	n/a	n/a	n/a	40000	n/a

DEQ AIR QUALITY PROGRAM
1410 N. Hilton, Boise, ID 83706
For assistance, call the
Air Permit Hotline - 1-877-5PERMIT

PERMIT TO CONSTRUCT APPLICATION
Revision 3
3/27/2007

Please see instructions on page 2 before filling out the form.

Company Name:	Dynamis Energy, LLC
Facility Name:	Hidden Hollow Waste-To-Energy (WTE) Facility
Facility ID No.:	
Brief Project Description:	Municipal solid waste thermal conversion facility located at the Ada County Landfill

POINT SOURCE STACK PARAMETERS

1.	2.	3a.	3b.	4.	5.	6.	7.	8.	9.	10.
Emissions units	**Stack ID**	**UTM Easting (m)**	**UTM Northing (m)**	**Base Elevation (m)**	**Stack Height (m)**	**Modeled Diameter (m)**	**Stack Exit Temperature (K)**	**Stack Exit Flowrate (acfm)**	**Stack Exit Velocity (m/s)**	**Stack orientation (e.g., horizontal, rain cap)**
Point Source(s)										
UNITPEAK		558,703.09	15,877,629.30	967.74	18.29	1.52	334.26	160,820.00	41.61	Vertical
UNIT1OP		558,703.09	15,877,629.30	967.74	18.29	1.52	334.26	37,000.00	9.57	Vertical
ASHBH		558,655.00	15,877,477.03	967.74	16.76	0.46	310.93	14,000.00	40.25	Vertical
EMERGEN		558,665.30	15,877,380.15	967.74	12.19	0.18	772.65	2,605.00	46.80	Vertical
CT1		558,682.50	15,877,706.69	967.74	10.44	10.00	303.52	1,181,020.80	7.10	Vertical
CT2		558,696.00	15,877,706.69	967.74	10.44	10.00	303.52	1,181,020.80	7.10	Vertical
HGEN1		557,482.93	15,874,721.26	872.63	4.39	0.37	754.26	12,484.05	56.00	Vertical
HGEN2		557,479.78	15,874,696.29	872.40	4.39	0.37	754.26	12,484.05	56.00	Vertical
HGEN3		557,475.20	15,874,662.66	871.97	4.39	0.37	754.26	12,484.05	56.00	Vertical
HGEN4		557,472.06	15,874,638.55	871.69	4.39	0.37	754.26	12,484.05	56.00	Vertical
FLARE1 - Scenario 1		557,489.99	15,874,809.15	873.88	12.19	3.05	1,064.00	4,947.39	0.32	Vertical
FLARE1 - Scenario 2		557,489.99	15,874,809.15	873.88	12.19	3.05	1,064.00	8,750.70	0.57	Vertical
FLARE2		557,494.64	15,874,787.34	872.90	12.19	3.05	1,060.00	8,719.77	0.56	Vertical
CCHIPGEN		558,217.00	15,877,073.49	987.01	1.83	0.20	768.71	3,439.12	50.00	Vertical
CSCRNGEN		558,236.00	15,877,001.31	988.54	1.83	0.08	797.00	483.14	50.00	Vertical

DEQ AIR QUALITY PROGRAM
1410 N. Hilton, Boise, ID 83706
For assistance, call the
Air Permit Hotline - 1-877-5PERMIT

PERMIT TO CONSTRUCT APPLICATION
Revision 3
4/5/2007

Please see instructions on page 2 before filling out the form.

Company Name:	Dynamis Energy, LLC
Facility Name:	Hidden Hollow Waste-To-Energy (WTE) Facility
Facility ID No.:	
Brief Project Description:	Municipal solid waste thermal conversion facility located at the Ada County Landfill

FUGITIVE SOURCE PARAMETERS

1.	2.	3a.	3b.	4.	5.	6.	7.	8.	9.	10.
Emissions units	**Stack ID**	**UTM Easting (m)**	**UTM Northing (m)**	**Base Elevation (m)**	**Release Height (m)**	**Easterly Length (m)**	**Northerly Length (m)**	**Angle from North (°)**	**Initial Vertical Dimension (m)**	**Initial Horizontal Dimension (m)**
Area Source(s)										
n/a										
Volume Source(s)										
n/a										

DEQ AIR QUALITY PROGRAM
1410 N. Hilton, Boise, ID 83706
For assistance, call the
Air Permit Hotline - 1-877-5PERMIT

PERMIT TO CONSTRUCT APPLICATION

Revision 3
4/5/2007

Please see instructions on page 2 before filling out the form.

Company Name:	Dynamis Energy, LLC
Facility Name:	Hidden Hollow Waste-To-Energy (WTE) Facility
Facility ID No.:	
Brief Project Description:	Municipal solid waste thermal conversion facility located at the Ada County Landfill

BUILDING AND STRUCTURE INFORMATION

1.	2.	3.	4.	5.	6.	7.
Building ID Number	**Length (ft)**	**Width (ft)**	**Base Elevation (m)**	**Building Height (m)**	**Number of Tiers**	**Description/Comments**
TURBINE	81.00	92.00	967.74	10.67	1	Dynamis Turbine Building
BOILER	79.00	39.90	962.41	15.24	1	Dynamis Boiler Structure
CTBLDG	96.00	58.00	967.74	10.36	1	Dynamis Cooling Tower Bases/Enclosure
MAIN	389.00	197.50	967.74	10.67	1	Dynamis Main Building (dimensions represent max length and width, building is not a rectangle)
HHBLDG1	12.80	9.10	871.85	3.66	1	GEN1_GEN2 Bldg
HHBLDG2	12.80	9.10	870.94	3.66	1	GEN3_GEN4 Bldg
CFLRSKID	14.67	44.01	873.41	2.44	1	ACLF FLR Skid
CGENCTRL	7.33	14.67	873.80	3.66	1	ACLF Generator Control Bldg
DEQCNTRL	24.70	12.90	874.32	3.05	1	ACLF Control Bldg

APPENDIX E

SIL Receptor List (on CD)

APPENDIX F

Model Protocol Approval

STATE OF IDAHO
DEPARTMENT OF
ENVIRONMENTAL QUALITY

1410 NORTH HILTON, BOISE, ID 83706 · (208) 373-0502

C. L. "BUTCH" OTTER, GOVERNOR
CURT FRANSEN, DIRECTOR

April 11, 2012

VIA EMAIL

Shannon Manoulian, P.E.
Project Engineer
JBR Environmental Consultants, Inc.
Boise, ID 83714

RE: Modeling Protocol for the 15-Day Pre-Permit to Construct Application for the Dynamis Energy Waste to Energy Facility at the Ada County Landfill near Boise, Idaho

Dear Ms. Manoulian:

DEQ received a dispersion modeling protocol from JBR Environmental Consultants, Inc., (JBR) on March 19, 2012, via email. The modeling protocol was submitted on behalf of Dynamis Energy, LLC (Dynamis). The modeling protocol proposes methods and data for use in Class II area ambient air impact analyses in support of a 15-Day Pre-Permit to Construct (15-Day PTC) application for a municipal solid waste-to-energy (MSWTE) conversion facility at the Hidden Hollow Landfill (HHLF). The HHLF site is owned and operated by Ada County.

The MSWTE facility is proposed to be located on a parcel of property leased from Ada County and will be entirely contained within the HHLF facility property. The facility would receive a portion of the MSW delivered to the HHLF. The proposed MSWTE facility would process up to 408 tons per day (TPD) of a combination of these materials to produce steam for electricity generation and ash as a saleable byproduct.

This protocol approval is based on the March 19 and March 21, 2012 protocol submittals, and is independent of the modeling protocol received on December 8, 2010, the DEQ protocol approval letter issued on December 16, 2010, and the 15-Day PTC application for the Dynamis 250 TPD MSWTE facility, received on December 30, 2010.

The modeling protocol has been reviewed and DEQ has the following comments:

- **Comment 1: Background Concentrations.** Your modeling protocol indicates that potential emissions of CO are below the Level I modeling applicability threshold of 15 pounds per hour. Modeling will not be required for this pollutant.

  DEQ provided ambient background concentrations to JBR Environmental Consultants, via email, on February 28, 2012. Monitoring data for NO_2 and ozone is limited to a small

number of sites within Idaho, and the most representative sites were selected for your project.

The ITD monitoring site is the closest source of NO_2 data in proximity to the Hidden Hollow Landfill. The preliminary backgrounds for nitrogen dioxide (NO_2) and ozone background data that were based on historical data from the Idaho Transportation Department (ITD) monitoring site in Boise. The NO_2 and ozone backgrounds submitted to you via email on February 28, 2012 have been replaced by the background values in this protocol approval. The 2011 NO_2 monitoring data was invalidated and has been removed from the NO_2 background values. The revised NO_2 background concentrations were based on 2007 and 2010 data from the ITD site, and represent the 98th percentile values for each hour during a day. The ozone backgrounds were developed using the 98th percentile value of hourly monitoring data from 2009, 2010, and 2011 from the White Pine site, in southeastern Boise, near the intersection of Boise Avenue and Apple Street.

The ozone and NO_2 data was collected during periods when ozone and NO_2 are expected to be at their highest levels during the year—generally starting in April or May, depending on the monitoring record, and ending on September 30th of each year. The monitoring data was reduced to single hourly values for each of the 24 hourly periods within a day.

Table 1. Ozone and Nitrogen Dioxide Background Concentrations

Hour Interval	Ozone Concentration 98th Percentile Value (ppb)[a]	Nitrogen Dioxide Concentration 98th Percentile Value (µg/m^3)[b]
1	53.0	43.2
2	50.9	41.4
3	51.9	33.8
4	48.0	32.0
5	47.9	30.1
6	46.0	37.6
7	41.0	43.2
8	43.0	48.9
9	48.0	54.6
10	54.3	43.2
11	61.0	32.0
12	66.0	26.7
13	72.9	17.3
14	76.0	11.3
15	80.0	11.3
16	78.4	11.2
17	73.7	11.2
18	70.0	15.0
19	67.0	30.1
20	62.8	54.4
21	55.0	56.4
22	55.0	58.3
23	55.0	58.3
24	53.9	54.5

a. Parts per billion.
b. Micrograms per cubic meter.

Backgrounds for the other criteria air pollutants required to be modeled are:

- PM_{10}: 73 µg/m^3, 24-hour average.

  The PM_{10} background value was based on historical DEQ airshed modeling for the Boise area, and is intended to represent the background at the landfill.

- $PM_{2.5}$: 19.3 µg/m^3, 24-hour average, and
  6.3 µg/m^3, annual average.

  $PM_{2.5}$ backgrounds were based on the Meridian, Idaho monitor's 2008, 2009, and 2010 finalized data from the U.S. EPA AirData website. The 24-hour average background is the 3-year average of each year's 98th percentile value. The annual average background is the 3-year average of the weighted mean value for each year.

- SO_2: 33.1 µg/m^3, 1-hour average, and
  2.6 µg/m^3, annual average.

  Due to the limited monitoring data for SO_2 within Idaho that are typically available from source-influenced sites, and which would be considered to be non-representative of the conditions at this site, this project will use the same SO_2 backgrounds as the current Ada County Landfill and Hidden Hollow Energy permitting projects. These SO_2 background values were based on monitoring data for the Fargo, North Dakota/Moorhead, Minnesota area, which was deemed to be more suitable for the Boise site considering the similar population and industrial source emissions within the immediate area than exist at either the Pocatello or Soda Springs, Idaho monitoring sites.

- Lead: 0.04 µg/m, 3-month average.

If Dynamis Energy's initial modeling does not demonstrate compliance with any of the NAAQS, and alterations to the proposed emission units' exhaust parameters or the requested allowable emission rates do not provide the necessary reductions in ambient impacts, please contact DEQ to discuss options with modifying the ambient background concentrations, to the extent the values used will be defensible in protecting public health and the environment.

- **Comment 3: Multiple Operating Scenarios.** Two distinct operating scenarios for Dynamis' facility were described in the modeling protocol. The first scenario described processing 380 tons during a 16-hour period from 7 AM to 11 PM, and a second scenario was described for processing 28 tons during an 8-hour period from 11 PM to 7 AM. The first scenario results in an average municipal solid waste (MSW) throughput of 23.75 tons per hour (T/hr), and the second scenario results in an average hourly MSW throughput of 3.5 T/hr. Additional variation within the two time periods was not discussed.

  If the 23.75 T/hr throughput rate is not the true maximum design capacity of the thermal conversion units and the secondary combustion chamber system, the maximum potential

hourly conditions have not been identified, and the average hourly operation rate may be exceeded during operation. The effects of the material throughput on release parameters must be substantiated and documented. Partial capacity operations may cause ambient impacts to occur in different locations and at different concentrations in the modeling analyses receptor grids.

For example, if increased hourly capacity is needed to allow for spikes in the grid's electricity demand during the peak summertime cooling season, the maximum hourly capacity must be accounted for in the modeling demonstration. Also, the "peaking" approach may be presented as an additional scenario that is modeled for a specific season with the use of "operational factors" in the model setup.

Because the new National Ambient Air Quality Standards (NAAQS) for sulfur dioxide (SO_2) and nitrogen dioxide (NO_2) are based on a period of a single hour, average operations spanning longer time intervals cannot be used as a "potential to emit" scenario when modeling for compliance with the 1-hour significant impact levels (SILs) or the NAAQS unless Dynamis Energy is willing to accept those limitations on an individual hourly basis. The modeling demonstration must account for the effects on hourly emissions rates and effects on the release parameters. The effects of varying types of waste, such as typical residential solid waste versus used tires, need to be evaluated for the estimate of worst-case hourly emission rates and release parameters for the pollutants with 1-hour averaging periods. If different waste types create different emissions profiles or release parameters this information must be presented and discussed thoroughly in the permit application's modeling report and must be incorporated in the modeling demonstration.

- **Comment 4: Justification of Release Parameters.** Documentation and justification of release parameters must be provided in the application. Refer to Section 3.4.3 of the *State of Idaho Guideline for Performing Air Quality Impact Analyses*, July 2011. Dynamis Energy's modeling protocol did not provide documentation of the release parameters for the proposed facility's emissions units so review and approval of release parameters will be conducted during the application's completeness review and the completeness determination will incorporate the *Guideline's* substantiation requirements.

  In most instances, typical values should be used rather than extreme values, and should represent the conditions at the point of release to the atmosphere. Conservative assumed values may be used where supporting documentation is unavailable. Documentation can include manufacturer's specifications sheets or design documents. The application's modeling report should confirm that the orientation of each of the point sources is vertical and uninterrupted, rather than a horizontal release or impeded by a raincap or similar feature.

  Be advised that an increase in the assumed stack release height is generally accompanied by a decrease in exit temperature, volumetric flow rate, and exit velocity if heat transfer from the stack is a significant loss factor. An example of the difference in release parameters that the location of the point of sampling in the exhaust system can make can be illustrated by the exhaust parameter supporting test data submitted for another project. The source tested was a diesel-fired 288 brake horsepower fire water pump driver engine and was conducted at full load conditions using Reference Methods 2 and 4.

Cummins CFP83-F40 Fire Pump Driver Exhaust Parameters		
Source of Data	**Exhaust Temperature (degrees Fahrenheit)**	**Exhaust Flow Rate (CFM)**
Manufacturer's Specification Sheet at operating at 288 bhp [a, b]	952	1632[c]
Engine Test Report[d]	685	1028

a. Brake horsepower.
b. Manufacturer testing condition barometric pressure at 29.53 inches Hg.
c. Reported as "CFM."
d. Test port location was listed as 4 feet below the stack exit height.
The source was modeled with a release height of 18 feet.
Testing was conducted at an elevation of 4200 feet above sea level.
Temperature and flow rate values were averaged based on four runs lasting from 3 to 5 minutes each.

- **Comment 5: Receptor Grid.** The proposed receptor grid may provide a good starting point for the modeling analyses. However, if DEQ performs a sensitivity analysis using a more densely-spaced receptor grid and any applicable ambient standards are exceeded, the permit will be denied. Approval of an initial receptor grid described in a modeling protocol does not qualify for final approval of a receptor grid layout for this project. This project must consider complicating factors of complex terrain on the Hidden Hollow Landfill property immediately adjacent to the proposed Dynamis Energy facility, as documented in Appendix A of the modeling protocol, and the nearby sources of Hidden Hollow Energy and the Ada County Landfill flare installation. Locations of the impacts may be different for some air pollutants due to the difference in source operating schedules, emission rates, location of emission releases, and other exhaust parameters for the various sources in your modeling demonstration.

  DEQ generally requests that modeling demonstrations use a denser spacing of receptors in areas of steep terrain. Erring on the side of a more densely-spaced receptor grid may be advisable. DEQ's *Guideline* no longer contains recommended ranges for approved receptor spacing. Often, the use of one or more additional grids of densely-spaced receptors is useful in resolving the maximum ambient impacts in specific areas. The receptor grid must contain all locations where the proposed facility will cause a significant ambient impact.

- **Comment 6: Ambient Air Boundary.** The modeling protocol contained a description of the ambient air boundary and the methods that Dynamis Energy will employ to preclude public access to the land that Dynamis Energy will treat as exempt from ambient air. The ambient air boundary was established as Dynamis Energy's leased property boundary and applied the appropriate levels of control of public access for a non-Prevention of Significant Deterioration project.

- **Comment 7: NO_2, 1-Hour Average SIL and NAAQS Modeling.** The modeling protocol submitted by Dynamis did not contain any documentation on the methods that may be used for an NO_2, 1-hour average, Significant Impact Level (SIL) or NAAQS modeling analyses. The Tier 1 and the Tier 2 Ambient Ratio Method (ARM) compliance methods may be used without prior DEQ approval.

  The Tier 3 Ozone Limiting Method (OLM) and Plume Volume Molar Ratio Method (PVMRM) compliance methods are non-regulatory guideline methods, and approved on

a case-by-case basis. OLM and PVMRM use an in-stack NO_2 to NO_x ratio for each NO_x emission source, and an equilibrium ratio for the model run's calculation of NO_2 formation. The Tier 3 methods are approved for Dynamis Energy's modeling demonstration, but be advised that in-stack NO_2 to NO_x ratios are often specific to fuel type and source design and can vary considerably even within the same source type, as is the case for diesel-fired engines for example. If an in-stack NO_2 to NO_x ratio other than the default value of 0.5 is used Dynamis must submit the supporting documentation. The default NO_2 equilibrium ratio is 0.90.

- **Comment 8: Diesel-Fired Emergency Generator Engine Testing Schedule.** The approach proposed in the modeling protocol appears reasonable. If DEQ performs sensitivity analyses using the MHRDOW7 option selecting a different month and NAAQS compliance is not demonstrated, the permit application may be denied.

- **Comment 9: DEQ Application Forms.** Please complete all modeling information application forms for this permit application package. An emission inventory specifically for modeling is included in these forms.

- **Comment 10: Ada County Landfill and Hidden Hollow Energy Nearby Sources Emissions Inventory.** DEQ requests that Dynamis include the emissions of two nearby sources—Hidden Hollow Energy, LLC (HHE) and the Ada County Landfill (ACLF)—as co-contributing sources in the your modeling demonstration. The exhaust parameters, locations, and emission rates for these sources were originally provided in an email dated December 6, 2010 for this project's initial PTC application. The ACLF and the HHE have experienced a marked increase in hydrogen sulfide (H_2S) generation for the landfill gas collected by the ACLF capture and control system. The HHE facility has an active PTC modification project on file with DEQ. The potential to emit SO_2 for the two existing engines at HHE and the two proposed engines will be affected by this permitting action. The final results of this permitting action are unclear, but DEQ will provide emission inventory and release parameter documentation that are likely to represent future operations at these facilities.

  On March 26, 2012, DEQ received notification that ACLF will not install a hydrogen sulfide (H_2S) control system, which would have also reduced SO_2 emissions for any combustion unit downstream of the control system. ACLF's flares are permitted to combust landfill gas with up to 600 parts per million by volume (ppm_v) of H_2S, which is valid for the Dynamis Energy nearby source analysis.

  HHE will be assumed to operate four generator engines with 2,400 standard cubic feet per minute (scfm) of landfill gas limited to an H_2S content of 180 parts per million by volume (ppm_v). The ACLF flaring operations will be assumed to operate at 950 scfm of landfill gas combusted in one flare.

  A second operating scenario for the nearby sources assumes that HHE is non-operational and ACLF is combusting 3,350 scfm of landfill gas at 600 parts per million on a volumetric basis (ppm_v) of H_2S. Dynamis must determine which operating scenario will cause the worst-case ambient impacts to verify that Dynamis will not cause or contribute to an exceedence of any of the NAAQS. Only ambient receptors where Dynamis' emissions cause a predicted impact greater or equal to the significant impact levels are

subject to these verification requirements. Ambient impacts caused by each of these three facilities within each facility's ambient air boundary are not evaluated for compliance with the NAAQS. In other words a facility does not cause or contribute to a NAAQS exceedence within its own ambient air boundary.

The emission rates and release parameters are provided in Attachment 1 to this protocol approval letter and are to be regarded as the appropriate information for your nearby source analyses for this project. The flare release parameters are dependent upon flow rate of landfill gas. The preliminary emission rate and exhaust parameter documentation provided to JBR during the meetings on February 9, 2012, and via email on February 15, 2012, may differ slightly from this protocol approval's information.

- **Comment 11: TAPs Regulated by 40 CFR 60 Subpart Eb**. Dynamis requested exclusion of emissions of cadmium, dioxin and furans, and hydrochloric acid from additional compliance demonstration methods as allowed by Section 210.20 of the State of Idaho Air Rules. The TAPs are regulated under 40 CFR 60, Subpart Eb, the Dynamis facility will be subject to this subpart, and DEQ agrees that a compliance demonstration according to the requirements of Section 210 of the State of Idaho Air Rules is not required for these pollutants.

- **Comment 12**: **Terrain Data.** DEQ recommends that Dynamis use a 1/3 arc second National Elevation Dataset (NED) file when running AERMAP to provide a 10-meter resolution in all areas where significant terrain features are present. The Hidden Hollow Landfill itself and nearby residential areas where ambient impacts are of highest concern have significant terrain features which need to be represented as accurately as possible with the data resources available. The coarsely-spaced outer receptor grids where the terrain is relatively flat could be based on the 30 meter resolution 1 arc second files if necessary.

DEQ's modeling staff considers the submitted dispersion modeling protocol, with resolution of the additional items noted above, to be approved. It should be noted, however, that the approval of the modeling protocol, and 15-day pre-permit application construction approval, are not meant to imply approval of completed dispersion modeling analyses. The protocol approval does not provide an exhaustive review of all issues that may factor into the completeness of the modeling demonstration, and more extensive documentation in the permit application's modeling report may be necessary where the modeling protocol does not provide supporting documentation and detail. Completeness determinations weigh the materials presented in permit application and modeling report in evaluating whether the modeling analyses adequately demonstrate compliance with the applicable standards and increments. Please refer to the State of Idaho Air Quality Modeling Guideline, which is available on the Internet at http://www.deq.idaho.gov/media/355037-modeling-guideline.pdf, for further guidance.

To ensure a complete and timely review of any analyses submitted to the Idaho Department of Environmental Quality, our modeling staff requests that electronic copies of all modeling input and output files (including BPIP and AERMAP input and output files) be submitted with analyses reports. Also, please include a copy of the protocol and this approval notice with the submitted application. If you have any further questions or comments, please contact me at (208) 373-0536.

Sincerely,

Darrin Mehr

Darrin Mehr
Air Quality Analyst
Monitoring, Modeling, and Emission Inventories
Air Quality Stationary Source Program

Attachment 1

Co-Contribution Source Analysis Information

for the

Ada County Landfill and the Hidden Hollow Energy Facilities

SCENARIO 1: This scenario represents Hidden Hollow Energy (HHE) operating at full capacity of 2,400 standard cubic feet per minute (scfm) of landfill gas at 180 ppm_v H_2S. Ada County Landfill (ACLF) is operating at partial capacity in flaring landfill gas at 950 scfm at 600 ppm_v H_2S, and at full capacity with Woodwaste Processing. All stacks were vertically oriented with no obstruction to exhaust flow.

Exhaust Parameters: Scenario 1							
Source	**UTM[a] Zone 11 (NAD83)[b]**		**Elevation (m)**	**Stack Height (m)**	**Stack Temperature (K)[d]**	**Stack Diameter (m)**	**Stack Velocity (m/s)[e]**
	Easting (m)[c]	**Northing (m)**					
Hidden Hollow Energy Sources							
Generator Engine 1	557482.93	4838615.04	872.63	4.39	754.26	0.366	56
Generator Engine 2	557479.78	4838607.43	872.4	4.39	754.26	0.366	56
Generator Engine 3	557475.2	4838597.18	871.97	4.39	754.26	0.366	56
Generator Engine 4	557472.06	4838589.83	871.69	4.39	754.26	0.366	56
Ada County Landfill Sources							
Flare 1	557489.99	4838641.83	873.88	12.19	1064	3.048	0.32
Chipper Engine	558217	4839332	987.01	1.83	768.71	0.2033	50
Power Screen Engine	558236	4839310	988.54	1.83	797	0.0762	50

a. Universal Transverse Mercator (geographical coordinate system).
b. North American Datum of 1983.
c. Meters.
d. Kelvin.
e. Meters per second.

Emission Rates: Scenario 1						
Source	**$PM_{10}/PM_{2.5}$[a]**		**SO_2[b]**		**NO_x[c]**	
	(lb/hr)[d]	**(T/yr)[e]**	**(lb/hr)**	**(T/yr)**	**(lb/hr)**	**(T/yr)**
Hidden Hollow Energy Sources						
Generator Engine 1	0.78	3.42	1.09	4.77	2.46	10.77
Generator Engine 2	0.78	3.42	1.09	4.77	2.46	10.77
Generator Engine 3	0.78	3.42	1.09	4.77	2.46	10.77
Generator Engine 4	0.78	3.42	1.09	4.77	2.46	10.77
Ada County Landfill Sources						
Flare 1	0.92	4.02	5.78	25.30	1.75	7.65
Chipper Engine	0.30	0.50	0.008	0.01	5.36	8.84
Power Screen Engine	0.27	0.44	0.001	0.002	3.79	6.25

a. Particulate matter with a mean aerodynamic diameter of 10 microns or less, including condensables / Particulate matter with a mean aerodynamic diameter of 2.5 microns or less, including condensables.
b. Sulfur dioxide.
c. Nitrogen oxides.
d. Pounds per hour.
e. Tons per year.

Comments on Scenario 1:

- The Chipper Engine and Power Screen Engine may be left out of the co-contributing source modeling analysis for SO_2. The potential emissions are insignificant.
- Flare 1 was assumed to operate 24 hours per day and 8,760 hours per year.
- The Wood Chipper and Power Screen Engines were assumed both operate 24 hours per day and 3,300 days per year, as limited in the ACLF Permit to Construct.
- HHE generator engines each operate 24 hours per day and 8,760 hours per year.

SCENARIO 2: HHE is non-operational, combusting no landfill gas. Ada County Landfill is operating at full capacity in flaring landfill gas at 3,350 scfm at 600 ppm_v H_2S with the landfill gas split equally between the two flares. The Chipper and Power Screen operations were assumed to operate at full capacity. All stacks were vertically oriented with no obstruction to exhaust flow.

Exhaust Parameters: Scenario 2							
Source	**UTM[a] Zone 11 (NAD83)[b]**		**Elevation (m)**	**Stack Height (m)**	**Stack Temperature (K)[d]**	**Stack Diameter (m)**	**Stack Velocity (m/s)[e]**
	Easting (m)[c]	**Northing (m)**					
Ada County Landfill Sources							
Flare 1	557489.99	4838641.83	873.88	12.19	1064	3.048	0.566
Flare 2	557494.64	4838635.18	872.9	12.19	1060	3.048	0.564
Chipper Engine	558217	4839332	987.01	1.83	768.71	0.2033	50
Power Screen Engine	558236	4839310	988.54	1.83	797	0.0762	50

a. Universal Transverse Mercator (geographical coordinate system).
b. North American Datum of 1983.
c. Meters.
d. Kelvin.
e. Meters per second.

Emission Rates: Scenario 2						
Source	**$PM_{10}/PM_{2.5}$[a]**		**SO_2[b]**		**NO_x[c]**	
	(lb/hr)[d]	**(T/yr)[e]**	**(lb/hr)**	**(T/yr)**	**(lb/hr)**	**(T/yr)**
Ada County Landfill Sources						
Flare 1	1.62	7.08	10.19	44.61	3.08	13.49
Flare 2	1.62	7.08	10.19	44.61	3.08	13.49
Chipper Engine	0.30	0.50	0.008	0.01	5.36	8.84
Power Screen Engine	0.27	0.44	0.001	0.002	3.79	6.25

a. Particulate matter with a mean aerodynamic diameter of 10 microns or less, including condensables / Particulate matter with a mean aerodynamic diameter of 2.5 microns or less, including condensables.
b. Sulfur dioxide.
c. Nitrogen oxides.
d. Pounds per hour.
e. Tons per year.

Comments on Scenario 2:

- The Chipper Engine and Power Screen Engine may be left out of the co-contributing source modeling analysis for SO_2. The potential emissions are insignificant.
- Flares 1 and 2 were assumed to operate 24 hours per day and 8,760 hours per year.
- The Wood Chipper and Power Screen Engines were assumed both operate 24 hours per day and 3,300 days per year, as limited in the ACLF Permit to Construct.
- Hidden Hollow Energy's generator engines are not included in this scenario.

APPENDIX G

MAXDAYCONT Output Files (on CD)