RECEIVED
APR 17 2012
DEPARTMENT OF ENVIRONMENTAL QUALITY
STATE A.Q. PROGRAM

PERMIT TO CONSTRUCT APPLICATION
Southern Field Welding
Burley, Idaho

Prepared for:
Southern Field Welding
238 W. 35 S.
Burley, ID 83318

Prepared by:
Bison Engineering, Inc.
1400 11th Avenue
Helena, MT 59601

Submittal Date: April 16, 2012

√#11546 $1,000.-
TS

BISON
ENGINEERING, INC.

1400 11TH AVENUE • HELENA, MT 59601 • 406-442-5768
FAX: 406-449-6653 • E-MAIL: bison@bison-eng.com • www.bison-eng.com

April 16, 2012

RECEIVED
APR 17 2012
DEPARTMENT OF ENVIRONMENTAL QUALITY
STATE A Q PROGRAM

Mr. Bill Rogers
Idaho Department of Environmental Quality
1410 North Hilton
Boise, ID 83706

Dear Mr. Rogers:

RE: Permit to Construct Application for Southern Field Welding

On behalf of Southern Field Welding (SFW), Bison Engineering, Inc. (Bison), is pleased to submit this letter, attached forms, and supporting information, which constitute a Permit to Construct (PTC) application for the existing SFW facility located in Burley, Idaho. SFW is required to submit either a PTC or exemption demonstration by April 16, 2012. An analysis of the facility determined that SFW does not qualify for an exemption under IDAPA 58.01.01.220-223 due to emissions being above the screening levels (see attached emission inventory).

SFW and Bison conducted a pre-application meeting via teleconference with the Idaho Department of Environmental Quality (IDEQ) on March 28, 2012. This meeting was very helpful to Bison and SFW in preparation for this PTC application submittal.

Required and supplemental information for a PTC is provided or otherwise addressed as follows:

Application Forms – Application forms are included as Appendix A to this letter. Included are:

- Form CSPTC: Cover Sheet
- Form GI: General Information
- Form EU: General Emission Unit (four forms for the following sources) including source descriptions:
    - Welding Operations
    - Abrasive Blasting
    - Paint Booth Space Heaters
    - Shop Space Heaters
- Form GI: General Information
- Form EU3: Spray Paint Booth

Emission Inventory – An emission inventory for the sources noted above is included in Appendix B. The emission inventory includes:

- Facility Wide PTE Inventory
- Ambient Impact Assessment Inventory
    - Information is provided demonstrating that SFW emits less than the Level 1 Thresholds for all pollutants except for $PM_{2.5}$ as presented in the State of Idaho Air Quality Modeling Guideline. This will be discussed further below.
- Toxic Air Pollutant Inventory
    - Information is provided demonstrating that SFW is below Toxic Air Pollutant (TAP) emission levels (ELs) listed in Sections 585 and 586 of the Idaho Air Quality Rules.
- Hazardous Air Pollutant Inventory (HAP).
    - Information is provided demonstrating that SFW is below the ELs listed in Sections 585 and 586 of the Air Quality Rules and that SFW is an area source of HAPs.

Plot Plan – A plot plan is included in Appendix C.

Regulatory Applicability Analysis – An analysis of the Idaho and federal regulations applicable to SFW is included in Appendix D.

Welding Rod Material Safety Data Sheets (MSDS) – The MSDS for the arc welding electrodes is provided in Appendix E to support the emission inventory and aid the Idaho Department of Environmental Quality (IDEQ) with the permit analysis.

Paint and Solvent MSDS – The MSDS for paints and solvents used at SFW is provided in Appendix F to support the emission inventory and aid IDEQ with the permit analysis.

Equipment and Pollution Control Information – This information supporting the emission units listed above is provided in Appendix G to support the emission inventory and aid IDEQ with the permit analysis.

The remainder of this letter presents and describes information about the facility and the application materials.

Facility Description

SFW is a small manufacturing facility located in Burley, Idaho. The facility specializes in manufacturing food processing equipment and oil and gas equipment. SFW will also manufacture other miscellaneous pieces of equipment, such as structural steel and custom steel, as requested.

SFW is comprised of three buildings: the Office/Engineering Building, the Fabrication 1 Building, and the Fabrication 2 Building.

Welding Operations

SFW uses a variety of steel base materials to manufacture the food processing equipment. SFW cuts and welds base materials inside the Fabrication 2 building, with these activities generating fugitive emissions vented out of six vents (see plot plan). Welding emissions are not captured by hoods or special ventilation. The facility was recently inspected by OSHA, and found to meet all applicable health and safety standards.

SFW uses the following types of welding:

- Shielded Metal Arc Welding (SMAW)
  - a.k.a. Manual Metal Arc Welding (MMA)
- Gas Metal Arc Welding (GMAW)
  - a.k.a. Metal Inert Gas Welding (MIG)
- Flux Cored Arc Welding (FCAW)
- Gas Tungsten Arc Welding (GTAW)
  - a.k.a. Tungsten Inert Gas Welding (TIG)
- Brazing

Abrasive Blasting and Spray Painting

SFW preps and paints some manufactured equipment. Painting preparation is accomplished using paint strippers and the use of an abrasive blaster. Painting is conducted in an enclosed booth with two exhaust stacks. Particulate from these stacks is controlled by filtration control, which achieves approximately 99% control. Abrasive blasting is also conducted in an enclosed booth, with a single exhaust stack. Particulate from abrasive blasting is controlled by a filter which achieves approximately 91% control.

Paint Booth and Shop Space Heaters

SFW uses a total of three diesel-fired space heaters to dry equipment after painting. The total rated heat capacity for these heaters is 0.461 mmBtu/hr. Emissions are vented from the same two exhaust stacks from the painting booth which achieve approximately 99% particulate control.

SFW uses a total of five natural-gas fired space heaters at the facility. The total rated heat input capacity is 0.795 mmBtu/hr. Space heater emissions are vented from exhaust vents used to vent welding emissions.

Ambient Concentration Impacts Demonstration – The attached emission inventory demonstrates that SFW's emissions are below the Level 1 Thresholds for all pollutants except for $PM_{2.5}$ as presented in the State of Idaho Air Quality Modeling Guideline (see attached EI for detailed calculations). The majority of the $PM_{2.5}$ emissions come from the welding activities, a fugitive source, that is vented from six vents in the Fab 2 building (see attached plot plan). The hourly and annual $PM_{2.5}$ emissions are approximately ¼ and 1/6 of the Level II Modeling Thresholds, respectively. The area around Burley is in attainment for all pollutants and does not have complex terrain. For these reasons, SFW does not believe that the ambient air quality standards for $PM_{2.5}$ are threatened by SFW's operations and a modeling demonstration for $PM_{2.5}$ is not included as part of this application.

The controlled emissions from the facility are below the Toxic Air Pollutant (TAP) emission levels (ELs) listed in Sections 585 and 586 of the Idaho Air Quality Rules. Per the modeling guideline, if controlled emissions are below the TAP ELs, then compliance with the ambient standards has been demonstrated.[1] For this reason, a modeling demonstration for TAPs is not included as part of this application.

Bison and SFW look forward to working with you during the application review process. If the Department has any questions or comments on this application, please contact either me (406-442-5768), or Kurt Daubs at SFW (208-885-5247).

Sincerely,
BISON ENGINEERING, INC.

Grant Rodway
Staff Engineer

cc: Kurt Daubs, SFW

Attachments:

Appendix A: Permit to Construct Application Forms
Appendix B: Emissions Inventory
Appendix C: SFW Plot Plan
Appendix D: Regulatory Applicability Analysis
Appendix E: Welding Rod MSDS
Appendix F: Paint and Solvent MSDS
Appendix G: Equipment and Pollution Control Information
Appendix H: Electronic Copies of Application Information

[1] State of Idaho Guideline for Performing Air Quality Impact Analysis, pages 12 and 13.

APPENDIX A:
IDAHO PERMIT TO CONSTRUCT APPLICATION FORMS

DEQ AIR QUALITY PROGRAM
1410 N. Hilton, Boise, ID 83706
For assistance, call the
Air Permit Hotline – 1-877-5PERMIT

General Information **Form GI**
Revision 7
2/18/10

Please see instructions on page 2 before filling out the form.

All information is required. If information is missing, the application will not be processed.

IDENTIFICATION

1. Company Name	2. Facility Name:
Southern Field Welding	Southern Field Welding

3. Brief Project Description:	Small manufacturing facility that conducts welding and surface coating activities.

FACILITY INFORMATION

4. Primary Facility Permit Contact Person/Title	Mr. Kurt Daubs		Safety Director	
5. Telephone Number and Email Address	208-677-2222		kurt@southernfieldwelding.com	
6. Alternate Facility Contact Person/Title	Mr. David Christensen		Engineering Dept. Manager	
7. Telephone Number and Email Address	208-677-2222		dave@southernfieldwelding.com	
8. Address to Which the Permit Should be Sent	238 West 35 South			
9. City/County/State/Zip Code	Burley	Cassia	ID	83318
10. Equipment Location Address (if different than the mailing address above)	Same as above			
11. City/County/State/Zip Code	Same as above			
12. Is the Equipment Portable?	☐ Yes ☒ No			
13. SIC Code(s) and NAICS Code	Primary SIC: 3441	Secondary SIC:	NAICS: 332312	
14. Brief Business Description and Principal Product	Southern Field Welding manufactures custom food processing systems and oil and gas field equipment.			
15. Indentify any adjacent or contiguous facility that this company owns and/or operates	None.			

16. Specify the reason for the application

☒ Permit to Construct (PTC)

For Tier I permitted facilities only: If you are applying for a PTC then you must also specify how the PTC will be incorporated into the Tier I permit.

- ☐ Incorporate the PTC at the time of the Tier I renewal
- ☐ Co-process the Tier I modification and PTC
- ☐ Administratively amend the Tier I permit to incorporate the PTC upon your request (IDAPA 58.01.01.209.05.a, b, or c)

☐ Tier I Permit
☐ Tier II Permit
☐ Tier II/Permit to Construct

CERTIFICATION

In accordance with **IDAPA 58.01.01.123 (Rules for the Control of Air Pollution in Idaho), I** certify based on information and belief formed after reasonable inquiry, the statements and information in the document(s) are true, accurate, and complete.

17. Responsible Official's Name/Title	Mr. Neil Justesen	Owner	
18. Responsible Official Address	238 West 35 South		
19.Responsible Official Telephone Number	208-677-2222		
20. Responsible Official Email Address	neil@southernfieldwelding.com		
21. Responsible Official's Signature	Neil Justesen	Date:	04/11/12

22. ☒ Check here to indicate that you would like to review the draft permit prior to final issuance.

DEQ AIR QUALITY PROGRAM
1410 N. Hilton, Boise, ID 83706
For assistance, call the
Air Permit Hotline – 1-877-5PERMIT

Cover Sheet for Air Permit Application – Permit to Construct **Form CSPTC**

Please see instructions on page 2 before filling out the form.

COMPANY NAME, FACILITY NAME, AND FACILITY ID NUMBER			
1. Company Name	Southern Field Welding		
2. Facility Name	Southern Field Welding	3. Facility ID No.	NA
4. Brief Project Description - One sentence or less	Small manufacturing facility that conducts welding and surface coating activities.		

PERMIT APPLICATION TYPE

5. ☐ New Source ☐ New Source at Existing Facility ☐ PTC for a Tier I Source Processed Pursuant to IDAPA 58.01.01.209.05.c
☒ Unpermitted Existing Source ☐ Facility Emissions Cap ☐ Modify Existing Source: Permit No.:____ Date Issued:____
☐ Required by Enforcement Action: Case No.:____

6. ☒ Minor PTC ☐ Major PTC

FORMS INCLUDED

Included	N/A	Forms		DEQ Verify
☒	☐	Form CSPTC – Cover Sheet		☐
☒	☐	Form GI – Facility Information		☐
☒	☐	Form EU0 – Emissions Units General: 4 Forms Included		☐
☐	☒	Form EU1– Industrial Engine Information	Please specify number of EU1s attached: ____	☐
☐	☒	Form EU2– Nonmetallic Mineral Processing Plants	Please specify number of EU2s attached: ____	☐
☒	☐	Form EU3– Spray Paint Booth Information	Please specify number of EU3s attached: 1	☐
☐	☒	Form EU4– Cooling Tower Information	Please specify number of EU3s attached: ____	☐
☐	☒	Form EU5 – Boiler Information	Please specify number of EU4s attached: ____	☐
☐	☒	Form CBP– Concrete Batch Plant	Please specify number of CBPs attached: ____	☐
☐	☒	Form HMAP – Hot Mix Asphalt Plant	Please specify number of HMAPs attached: ____	☐
☐	☒	PERF – Portable Equipment Relocation Form		☐
☐	☒	Form AO – Afterburner/Oxidizer		☐
☐	☒	Form CA – Carbon Adsorber		☐
☐	☒	Form CYS – Cyclone Separator		☐
☐	☒	Form ESP – Electrostatic Precipitator		☐
☐	☒	Form BCE– Baghouses Control Equipment		☐
☐	☒	Form SCE– Scrubbers Control Equipment		☐
☐	☒	Form VSCE – Venturi Scrubber Control Equipment		☐
☐	☒	Form CAM – Compliance Assurance Monitoring		☐
☒	☐	Forms EI— Emissions Inventory		☐
☒	☐	PP – Plot Plan		☐
☐	☒	Forms MI1 – MI4 – Modeling	(Excel workbook, all 4 worksheets)	☐
☒	☐	Form FRA – Federal Regulation Applicability		☐

DEQ AIR QUALITY PROGRAM
1410 N. Hilton, Boise, ID 83706
For assistance, call the
Air Permit Hotline – 1-877-5PERMIT

Emissions Unit - General **Form EU0**
Revision 4
08/28/08

Please see instructions on page 2 before filling out the form.

IDENTIFICATION

1. Company Name:	2. Facility Name:	3. Facility ID No:
Southern Field Welding	Southern Field Welding	NA

4. Brief Project Description:	Small manufacturing facility that conducts welding and surface coating activities.

EMISSIONS UNIT (PROCESS) IDENTIFICATION & DESCRIPTION

5.	Emissions Unit (EU) Name:	WELDING OPERATIONS
6.	EU ID Number:	01
7.	EU Type:	☐ New Source ☒ Unpermitted Existing Source ☐ Modification to a Permitted Source -- Previous Permit #: Date Issued:
8.	Manufacturer:	Various types of welding are used. See attachment.
9.	Model:	SEE ATTACHMENT.
10..	Maximum Capacity:	SEE ATTACHMENT.
11.	Date of Construction:	1998
12.	Date of Modification (if any):	NA
13.	Is this a Controlled Emission Unit?	☒ No ☐ Yes If Yes, complete the following section. If No, go to line 22.

EMISSIONS CONTROL EQUIPMENT

14. Control Equipment Name and ID:	NA					
15. Date of Installation:	NA	16. Date of Modification (if any):	NA			
17. Manufacturer and Model Number:	NA					
18. ID(s) of Emission Unit Controlled:	NA					
19. Is operating schedule different than emission units(s) involved?	☐ Yes ☐ No					
20. Does the manufacturer guarantee the control efficiency of the control equipment?	☐ Yes ☐ No (If Yes, attach and label manufacturer guarantee)					

	Pollutant Controlled					
	PM	PM10	SO_2	NOx	VOC	CO
Control Efficiency	NA	NA	NA	NA	NA	NA

21. If manufacturer's data is not available, attach a separate sheet of paper to provide the control equipment design specifications and performance data to support the above mentioned control efficiency. See attached EI for emissions calcuations.

EMISSION UNIT OPERATING SCHEDULE (hours/day, hours/year, or other)

22.	Actual Operation:	2600 HRS/YR
23.	Maximum Operation:	8760 HRS/YR

REQUESTED LIMITS

24.	Are you requesting any permit limits?	☐ Yes ☒ No (If Yes, indicate all that apply below)
	☐ Operation Hour Limit(s):	NA
	☐ Production Limit(s):	NA
	☐ Material Usage Limit(s):	NA
	☐ Limits Based on Stack Testing:	Please attach all relevant stack testing summary reports
	☐ Other:	NA
25.	Rationale for Requesting the Limit(s):	NA

Form EU0 –Welding Operations Attachment

Welding Operations Description and Specifications

SFW uses a variety of steel base materials to manufacture the food processing and oil field equipment. SFW cuts and welds base materials inside the Fabrication 2 building, with these activities generating fugitive emissions vented out of six vents (see plot plan). Welding emissions are not captured by hoods or special ventilation. The facility was recently inspected by OSHA, and found to meet all applicable health and safety standards.

SFW uses the following types of welding:

- Shielded Metal Arc Welding (SMAW)
  - a.k.a. Manual Metal Arc Welding (MMA)
- Gas Metal Arc Welding (GMAW)
  - a.k.a. Metal Inert Gas Welding (MIG)
- Flux Cored Arc Welding (FCAW)
- Gas Tungsten Arc Welding (GTAW)
  - a.k.a. Tungsten Inert Gas Welding (TIG)
- Brazing

Below are descriptions of SMAW, GMAW, and FCAW from AP-42 Chapter 12.19 Electric Arc Welding.[1]

"SMAW uses heat produced by an electric arc to melt a covered electrode and the welding joint at the base metal. During operation, the rod core both conducts electric current to produce the arc and provides filler metal for the joint. The core of the covered electrode consists of either a solid metal rod of drawn or cast material or a solid metal rod fabricated by encasing metal powders in a metallic sheath. The electrode covering provides stability to the arc and protects the molten metal by creating shielding gases by vaporization of the cover."

"GMAW is a consumable electrode welding process that produces an arc between the pool of weld and a continuously supplied filler metal. An externally supplied gas is used to shield the arc."

"FCAW is a consumable electrode welding process that uses the heat generated by an arc between the continuous filler metal electrode and the weld pool to bond the metals. Shielding gas is provided from flux contained in the tubular electrode. This flux cored electrode consists of a metal sheath surrounding a core of various powdered materials. During the welding process, the electrode core material produces a slag cover on the face of the weld bead. The welding pool can be protected from the atmosphere either by self-shielded vaporization of the flux core or with a separately supplied shielding gas."

---

[1] Available at http://www.epa.gov/ttn/chief/ap42/ch12/final/c12s19.pdf

Gas-Shielded Tungsten Arc Welding (GTAW) or TIG (Tungsten Inert Gas) welding uses a non-consumable solid tungsten electrode. The electrode, the arc and the area surrounding the molten weld puddle are protected from the atmosphere by an inert gas shield. A filler metal may be added as needed to the leading edge of the molten puddle.

Brazing involves joining two pieces of metal with a molten filler metal, such as brass. Brazing is similar to soldering, except that that brazing occurs at higher temperatures to melt the filler metal. Brazing generally produces weaker welds than the arc welding types.

Below is a list of the materials and quantities of welding materials used at SFW in 2011.

Welding Materials		
Welding Type	**Welding Rod Name/Model**	**2011 Use Rates (lb/year)**
SMAW	LINCOLN 308L-V3/32X8	16
SMAW	LINCOLN Excalibur 309 SS	8
SMAW	LINCOLN 309-V1/8X8	8
SMAW	LINCOLN 309/309L-V MR 1/8X12	8
SMAW	LINCOLN 309/309L-V3/32X12	8
SMAW	LINCOLN EXCAL1/8 7018	1150
SMAW	LINCOLN EXCAL3/32 7018	1400
SMAW	LINCOLN FW5P+1/8 6010	900
SMAW	LINCOLN FW5P+3/32 6010	350
SMAW	UTP 85 FN Cast Iron	3
GMAW	Murex Murematic S4 Plus	2910
FCAW	Hobart Fabshield 21B	10
GMAW	Hobart HB 28 #11	20
FCAW	Hobart Arc 71	10626
FCAW	Lincoln Wire Outershield 71M	925
GTAW7	Alcotec Aluminum TIG Wire	30
GTAW7	UTP 309L	33
GTAW	UTP ER308L	530
GTAW	SOW ER70S	20
Brazing	NA	NA

Emissions from GTAW[2] and brazing are generally considered to be insignificant. No emission factors for these types of welding are included in Chapter 12.19 of AP-42, EPA's WebFIRE database[3], or the Guide for Estimating Welding Emissions for EPA and Ventilation Permit Reporting developed by the American Welding Society. For these reasons, emissions from these types of welding at SFW are considered to be insignificant and are not included in the emission inventory.

The MSDS sheets for the materials listed above are provided as an attachment to this application.

The facility typically operates 10 hours a day, 5 days a week, and 52 weeks a year (2600 hours). To calculate the maximum potential-to-emit, a scaling factor was developed based on 8760 hours of operation and applied to the 2011 use rates.

$$\text{Scaling Factor} = \frac{8760\ hours\ maximum}{2600\ hours\ actual} = 3.37$$

The maximum potential to emit was then calculated based on this scaling factor applied to the SMAW, GMAW, and FCAW electrodes listed above. See the attached emission inventory for more information.

Emission Control and Ventilation Information

Welding emissions are not captured by hoods or special ventilation. The facility was recently inspected by OSHA, and found to meet all applicable health and safety standards.

Welding emissions are exhausted out of six vents in the Fabrication 2 building (see attached plot plan).

---

[2] See section XV of the linked MSDS: http://www.weldcotemetals.com/dataFiles/msds/msds101.pdf
[3] Available at http://cfpub.epa.gov/webfire/

DEQ AIR QUALITY PROGRAM
1410 N. Hilton, Boise, ID 83706
For assistance, call the
Air Permit Hotline – 1-877-5PERMIT

Emissions Units - Spray Paint Booth Information **Form EU3**
Revision 5
08/28/08

Please see instructions on page 2 before filling out the form.

IDENTIFICATION

1. Company Name:	2. Facility Name:	3. Facility ID No:
Southern Field Welding, Inc.	Southern Field Welding, Inc.	NA

4. Brief Project Description: Small manufacturing facility that conducts welding and surface coating activities.

BOOTH INFORMATION

5. Booth Type: ☐ New Booth ☒ Unpermitted Existing Booth
☐ Modification to a Permitted Booth, Permit #: , Date Issued:

6. Construction Date: 10/01/11

SPRAY GUN DESCRIPTION AND SPECIFICATIONS

Gun No.	7. Manufacturer	8. Model	9. Type	10. Transfer Eff. %	11. Rated Capacity (gal/hr)
1	Graco	ULTRA MAXII 695	Airless	75%	0.95 gal/hr
2	NA	NA	NA	NA	NA
3	NA	NA	NA	NA	NA
4	NA	NA	NA	NA	NA

Number of guns to be used simultaneously:

SPRAY MATERIAL DESCRIPTION AND SPECIFICATIONS

12. Type of Spray Material Used	13. Type of Material Coated	14. Max. Usage (gal/day)	15. Solid TAP/HAP Content (lb/gal)	16. VOC TAP/HAP Content (lb/gal)	17. MSD (Y/N)
See attachment and E.I.	Metal	See E.I.	See E.I.	See E.I.	Y
See attachment and E.I.	Metal	See E.I.	See E.I.	See E.I.	Y
See attachment and E.I.	Metal	See E.I.	See E.I.	See E.I.	Y

REQUEST FOR PERMIT LIMITATIONS

18. Are you requesting any permit limits? ☒ No ☐ Yes. If Yes, check all that apply below and fill in requested limit(s)

☐ Operation Hour Limits: NA	☐ Production Limits: NA
☐ Material Usage Limits: Paints and Thinners: NA	☐ Other: NA

19. Rationale for Requesting the Limit(s): NA

EMISSION CONTROL DEVICE (FILTER) DESCRIPTION AND SPECIFICATIONS

Stack Served	20. Filter Manufacturer	21. Model	22. PM Control Efficiency(%)[a]	23. Dimension (Total Area, Thickness and Number of Filters)
Stack 1	EMI Filtration - (Pre-Filter)	Blue/White Poly Roll FL-1000	91.2%	48 square inches, one filter per stack, EP2 and EP3
Stack 2	Filtrair - (Primary Filter)	FF-560 GX	99%	36 square inches, one filter per stack, EP2 and EP3
Stack 3	NA	NA	NA	NA
Stack 4	NA	NA	NA	NA

Notes: a. Provide either stack test data or vendor's documentation to support the control efficiency specified above.
b. Fill out and submit appropriate control equipment form(s) if this booth has a control device(s) other than a filter system.

BOOTH OPERATING SCHEDULE (indicate hours/day, hours/year, or other)

24. Actual Operation:	25. Maximum Operation:
Five days a week, 10 hours a day, 52 weeks a year (2600 hours a year).	Theoreticaly, 8760 hours a year.

Form EU3 –Spray Paint Booth Attachment

Spray Material Description and Specifications

Southern Field Welding (SFW) uses a variety of paints, coatings, and thinners. The paints are generally enamel and are not water-based. Below is a list of the materials and quantities of materials used at SFW.

Paints and Coatings			
Manufacturer	**Part Code**	**Coating Usage (gals/year)**	**lbs VOC/gal of Coating**
Valley Paint Manufacturing	003 Gray Primer	33	3.88
Valley Paint Manufacturing	009 White Primer	17	4.17
Valley Paint Manufacturing	2104 Km Gloss White Silicone	90	3.69
Valley Paint Manufacturing	097 Enamel Reducer Medium	194	6.92
Valley Paint Manufacturing	2101 Km White Primer	10	3.83
Valley Paint Manufacturing	2153 White Intermediate Coat	30	4.3
Valley Paint Manufacturing	2513 Km Black Sil Alkyd	373	3.78
Valley Paint Manufacturing	2516 Black Phenolic Primer	243	4.18
Valley Paint Manufacturing	2001 Urethane Activator	165	3.52
Valley Paint Manufacturing	2126 Gloss White Silicone Enamel	80	3.29
Valley Paint Manufacturing	2106 White Super Speed Enamel	20	4.57
Valley Paint Manufacturing	2030 Silicone Mod Clear Enamel	20	3.75
Carboline	PHENOLINE S309F744905D - PART A	375	0.11
Carboline	PHENOLINE S309F744905D - PART B	75	0.08
Total:		1725	---

Thinners			
Manufacturer	**Part Code**	**Coating Usage (gals/year)**	**lbs VOC/gal of Coating**
Univar USA Inc.	Lacquer Thinner B	838	6.805
Crown MEK	Methyl Ethyl Ketone	6	6.7
Crown Xylol	Xylene	39	7.255
Total:		883	---

The MSDS sheets for all of the materials listed above are provided as an attachment to this application.

The facility typically operates 10 hours a day, 5 days a week, and 52 weeks a year (2600 hours). To calculate the maximum potential-to-emit, a scaling factor was developed based on 8760 hours of operation and applied to the 2011 use rates.

$$\text{Scaling Factor} = \frac{8760\ hours\ maximum}{2600\ hours\ actual} = 3.37$$

The maximum potential to emit was then calculated based on this scaling factor applied to each of the chemicals listed above. See the attached emission inventory for more information.

Paint Booth Information

The paint booth volume is approximately 63,935 ft^3 (see attached plot plan). Three portable diesel heaters are used for heating and drying of painted equipment in the paint booth (see attached form for the portable diesel space heaters emission unit).

Emission Control Device (Filter) Description and Specifications

SFW uses a pre-filter and a primary filter to control particulate emissions from the paint booth. The table below summarizes pollution control equipment for this source:

Paint Booth Emission Control			
Filter Manufacturer	**Model**	**Particulate Control Efficiency**	**Filter Dimension (in^2)**
EMI Filtration - (Pre-Filter)	Blue/White Poly Roll FFL-1000	91.2%	48
Filtrair - (Primary Filter)	FF-560 GX	>99%	36
Effective Particulate Control Efficiency from Both Controls:		99.95%	

Filter manufacturer information is attached to this document. The pre-filter and post-filter exhaust out of a common stack. See the attached plot plan for the location of the exhaust points for the paint booth.

DEQ AIR QUALITY PROGRAM
1410 N. Hilton, Boise, ID 83706
For assistance, call the
Air Permit Hotline – 1-877-5PERMIT

Emissions Unit - General **Form EU0**
Revision 4
08/28/08

Please see instructions on page 2 before filling out the form.

IDENTIFICATION

1. Company Name:	2. Facility Name:	3. Facility ID No:
Southern Field Welding	Southern Field Welding	NA

4. Brief Project Description:	Small manufacturing facility that conducts welding and surface coating activities.

EMISSIONS UNIT (PROCESS) IDENTIFICATION & DESCRIPTION

5.	Emissions Unit (EU) Name:	ABRASIVE BLASTING
6.	EU ID Number:	03
7.	EU Type:	☐ New Source ☒ Unpermitted Existing Source ☐ Modification to a Permitted Source -- Previous Permit #: Date Issued:
8.	Manufacturer:	MARCO
9.	Model:	M-2502.5
10..	Maximum Capacity:	1,685 LBS/DAY
11.	Date of Construction:	2011
12.	Date of Modification (if any):	NA
13.	Is this a Controlled Emission Unit?	☐ No ☒ Yes If Yes, complete the following section. If No, go to line 22.

EMISSIONS CONTROL EQUIPMENT

14. Control Equipment Name and ID:	EMI Filtration Blue/White Poly Roll FL-1000 Tack
15. Date of Installation:	2011 16. Date of Modification (if any): NA
17. Manufacturer and Model Number:	EMI Filtration Blue/White Poly Roll FL-1000 Tack
18. ID(s) of Emission Unit Controlled:	03
19. Is operating schedule different than emission units(s) involved?	☐ Yes ☒ No
20. Does the manufacturer guarantee the control efficiency of the control equipment?	☒ Yes ☐ No (If Yes, attach and label manufacturer guarantee)

	Pollutant Controlled					
	PM	PM10	SO_2	NOx	VOC	CO
Control Efficiency	91.2%	91.2%	NAI	NAI	NA	NA

21. If manufacturer's data is not available, attach a separate sheet of paper to provide the control equipment design specifications and performance data to support the above mentioned control efficiency. See attached documentation for this unit and EI.

EMISSION UNIT OPERATING SCHEDULE (hours/day, hours/year, or other)

22.	Actual Operation:	2600 HRS/YR
23.	Maximum Operation:	8760 HRS/YR

REQUESTED LIMITS

24.	Are you requesting any permit limits?	☐ Yes ☒ No (If Yes, indicate all that apply below)
	☐ Operation Hour Limit(s):	NA
	☐ Production Limit(s):	NA
	☐ Material Usage Limit(s):	NA
	☐ Limits Based on Stack Testing:	Please attach all relevant stack testing summary reports
	☐ Other:	NA
25.	Rationale for Requesting the Limit(s):	NA

Form EU0 –Abrasive Blasting Attachment

Abrasive Blasting Description and Specifications

SFW uses abrasive blasting media to prepare metals for welding and painting. SFW uses a material called Sharpshot® manufactured by Minerals Research and Recovery, Inc. as its blasting media. Sharpshot® is composed of 100% copper slag.[1]

The blasting media is applied using a 6.0 cubic foot pot manufactured by Marco.[2] Below is a picture of the abrasive blaster used at SFW.

Manufacturers' information for both the Sharpshot® and the Marco abrasive blaster are included in an appendix to this application.

---

[1] Additional information about Sharpshot® can be found at http://www.mrrinc.com/

[2] Additional information about Marco and the abrasive blasting pots can be found at http://www.marcousa.com/products.cfm?cid=2

The facility typically operates 10 hours a day, 5 days a week, and 52 weeks a year (2600 hours). To calculate the maximum potential-to-emit, a scaling factor was developed based on 8760 hours of operation and applied to the 2011 use rates.

$$\text{Scaling Factor} = \frac{8760\ hours\ maximum}{2600\ hours\ actual} = 3.37$$

Below is a summary of the actual and maximum calculated use of Sharpshot® based on 2011 use data and using the scaling factor.

Abrasive Blasting Use	
First Order Date	05/18/2011
Last Order Date	10/09/2011
Total Days Between Orders	144
Total Lbs of Material Used Over this Period	72,000
Calculated Actual Use (lbs/day)	500
Calculated Maximum Use Using Scaling Factor (lbs/day)	1684.6
Annual Maximum Usage Using Scaling Factor (365 days/year)	614,885

Please see the attached emission inventory for more information on the abrasive blasting calculations.

Emission Control and Ventilation Information

Abrasive blasting is conducted in a fully enclosed area in the Fabrication 2 Building with an exhaust fan. The exhaust for the abrasive blasting booth is emitted from emission point #1 (see attached plot plan) through a particulate filter which achieves 91.2% control for PM_{10} per manufacturer's information (included in appendix G to this application).

DEQ AIR QUALITY PROGRAM
1410 N. Hilton, Boise, ID 83706
For assistance, call the
Air Permit Hotline – 1-877-5PERMIT

Emissions Unit - General **Form EU0**
Revision 4
08/28/08

Please see instructions on page 2 before filling out the form.

IDENTIFICATION

1. Company Name:	2. Facility Name:	3. Facility ID No:
Southern Field Welding	Southern Field Welding	NA

4. Brief Project Description:	Small manufacturing facility that conducts welding and surface coating activities.

EMISSIONS UNIT (PROCESS) IDENTIFICATION & DESCRIPTION

5.	Emissions Unit (EU) Name:	PAINT BOOTH SPACE HEATERS
6.	EU ID Number:	04
7.	EU Type:	☐ New Source ☒ Unpermitted Existing Source ☐ Modification to a Permitted Source -- Previous Permit #: Date Issued:
8.	Manufacturer:	MR. HEATER (TWO 175KTRs) AND VAL6 (ONE KBE5S)
9.	Model:	175KTR AND KBE5S
10..	Maximum Capacity:	0.461 MMBTU/HR FOR 3 HEATERS
11.	Date of Construction:	2011
12.	Date of Modification (if any):	NA
13.	Is this a Controlled Emission Unit?	☒ No ☐ Yes If Yes, complete the following section. If No, go to line 22.

EMISSIONS CONTROL EQUIPMENT

14. Control Equipment Name and ID:	NA		
15. Date of Installation:	NA	16. Date of Modification (if any):	NA
17. Manufacturer and Model Number:	NA		
18. ID(s) of Emission Unit Controlled:	NA		
19. Is operating schedule different than emission units(s) involved?	☐ Yes ☐ No		
20. Does the manufacturer guarantee the control efficiency of the control equipment?	☐ Yes ☐ No (If Yes, attach and label manufacturer guarantee)		

	Pollutant Controlled					
	PM	PM10	SO_2	NOx	VOC	CO
Control Efficiency	See EI	See EI	See EI	See EI	See EI	See EI

21. If manufacturer's data is not available, attach a separate sheet of paper to provide the control equipment design specifications and performance data to support the above mentioned control efficiency.

EMISSION UNIT OPERATING SCHEDULE (hours/day, hours/year, or other)

22.	Actual Operation:	2600 HRS/YR
23.	Maximum Operation:	8760 HRS/YR

REQUESTED LIMITS

24.	Are you requesting any permit limits?	☐ Yes ☒ No (If Yes, indicate all that apply below)
	☐ Operation Hour Limit(s):	NA
	☐ Production Limit(s):	NA
	☐ Material Usage Limit(s):	NA
	☐ Limits Based on Stack Testing:	Please attach all relevant stack testing summary reports
	☐ Other:	NA
25.	Rationale for Requesting the Limit(s):	NA

Form EU0 –Paint Booth Space Heaters Attachment

Paint Booth Gas Space Heaters Specifications

SFW uses a total of three diesel-fired space heaters to dry equipment after painting. The table below summarizes the make, model, and capacity of the heaters.

Paint Booth Space Heaters				
Manufacturer	**Model**	**Number of Units**	**Rated Heat Capacity Per Unit (Btu/hr)**	**Total Rated Heat Capacity (mmBtu/hr)**
Mr. Heater	175KTR	2	0.175	0.35
VAL6	KBE5S	1	0.111	0.111
Total Heat Capacity for All Heaters (mmBtu/hr)				**0.461**

The specification sheets for these space heaters are included in this application. Emissions from the heaters are exhausted from painting booth emission points 2 and 3 (see attached plot plan). Particulate emissions are controlled by the pre-filter and primary filter, achieving approximately 99.91% control (see attached emission inventory).

The emission inventory summarizes the maximum possible emissions for these space heaters. SFW seeks no limit on hours of operation or annual fuel usage for these space heaters.

DEQ AIR QUALITY PROGRAM
1410 N. Hilton, Boise, ID 83706
For assistance, call the
Air Permit Hotline – 1-877-5PERMIT

Emissions Unit - General **Form EU0**
Revision 4
08/28/08

Please see instructions on page 2 before filling out the form.

IDENTIFICATION

1. Company Name:	2. Facility Name:	3. Facility ID No:
Southern Field Welding	Southern Field Welding	NA

4. Brief Project Description:	Small manufacturing facility that conducts welding and surface coating activities.

EMISSIONS UNIT (PROCESS) IDENTIFICATION & DESCRIPTION

5.	Emissions Unit (EU) Name:	SHOP SPACE HEATERS
6.	EU ID Number:	05
7.	EU Type:	☐ New Source ☒ Unpermitted Existing Source ☐ Modification to a Permitted Source – Previous Permit #: Date Issued:
8.	Manufacturer:	ADVANCED DISTRIBUTOR PRODUCTS (ADS) AND MODINE (M)
9.	Model:	ADS: SEP SERIES 175-A; M: HIGH EFFICIENCY II PDP
10..	Maximum Capacity:	0.795 MMBTU/HR FOR 5 HEATERS
11.	Date of Construction:	1998
12.	Date of Modification (if any):	NA
13.	Is this a Controlled Emission Unit?	☒ No ☐ Yes If Yes, complete the following section. If No, go to line 22.

EMISSIONS CONTROL EQUIPMENT

14. Control Equipment Name and ID:	NA					
15. Date of Installation:	NA	16. Date of Modification (if any):	NA			
17. Manufacturer and Model Number:	NA					
18. ID(s) of Emission Unit Controlled:	NA					
19. Is operating schedule different than emission units(s) involved?	☐ Yes ☐ No					
20. Does the manufacturer guarantee the control efficiency of the control equipment?	☐ Yes ☐ No (If Yes, attach and label manufacturer guarantee)					

	Pollutant Controlled					
	PM	PM10	SO_2	NOx	VOC	CO
Control Efficiency	See EI	See EI	See EI	See EI	See EI	See EI

21. If manufacturer's data is not available, attach a separate sheet of paper to provide the control equipment design specifications and performance data to support the above mentioned control efficiency.

EMISSION UNIT OPERATING SCHEDULE (hours/day, hours/year, or other)

22.	Actual Operation:	2600 HRS/YR
23.	Maximum Operation:	8760 HRS/YR

REQUESTED LIMITS

24.	Are you requesting any permit limits?	☐ Yes ☒ No (If Yes, indicate all that apply below)
	☐ Operation Hour Limit(s):	NA
	☐ Production Limit(s):	NA
	☐ Material Usage Limit(s):	NA
	☐ Limits Based on Stack Testing:	Please attach all relevant stack testing summary reports
	☐ Other:	NA
25.	Rationale for Requesting the Limit(s):	NA

Form EU0 –Natural Gas Space Heaters Attachment

Natural Gas Space Heaters Specifications

SFW uses a total of five natural-gas fired space heaters at the facility. The table below summarizes the make, model, and capacity of the heaters.

Natural Gas Space Heaters				
Manufacturer	**Model**	**Number of Units**	**Rated Heat Capacity Per Unit (Btu/hr)**	**Total Rated Heat Capacity (mmBtu/hr)**
Advanced Distributor Products	SEP Series 175-A	2	0.1725	0.3450
Modine	High Efficiency II PDP 150	3	0.150	0.4500
Total Heat Capacity for All Heaters (mmBtu/hr)				**0.7950**

The specification sheets for these space heaters are included in this application. The emission inventory summarizes the maximum possible emissions for these space heaters. SFW seeks no limit on hours of operation or annual fuel usage for these space heaters.

APPENDIX B: EMISSIONS INVENTORY

Department of Environmental Quality - Air Quality Division
Toxic Air Pollutant (TAP) Preconstruction Compliance Application Completeness Checklist

This checklist is designed to aid the applicant in submitting a complete preconstruction compliance demonstration for toxic air pollutants (TAPs) in permit to construct applications. The applicant must place a check mark in the box for each section below that applies.

I. Actions Needed Before Submitting Application

☒ Refer to the Rule. Read the Demonstration of Preconstruction Compliance with Toxic Standards contained in IDAPA 58.01.01.210 (Rules Section 210) Rules for the Control of Air Pollution in Idaho (Rules). Toxic air pollutants (TAPs) are regulated in accordance with Rules Section 210 only from emission units constructed or modified on or after July 1, 1995.

Determine if a new (constructed after June 30, 1995) emission unit has the potential to emit a TAP listed in IDAPA 58.01.01.585 (Rules Section 585) or IDAPA 58.0101.586 (Rules Section 586). Potential toxic air pollutants can be determined by reviewing commonly available emission factors, such as EPA's AP-42, or calculating emissions using a mass balance. For TAPs that are emitted but not listed in Rules Section 585 and 586, contact the Air Permit Hotline at 877-5PERMIT.

Determine if the proposed construction or modification is exempt from the need to obtain a permit to construct in accordance with IDAPA 58.01.01.220-223. Use the Exemption Criteria and Reporting Requirements for TAPs IDAPA 58.01.01.223 checklist to assist you in the exemption determination. If the source does not qualify for an exemption in accordance with IDAPA 58.01.01.220-223 complete the following checklist and submit it with the permit application. Please note that fugitive TAP emissions are not included in the IDAPA 58.01.01.223 exemption determination, but fugitive TAP emissions are included in the analysis if a permit is required. Stated another way: if a source is required to obtain a Permit to Construct because it does not meet the exemption criteria for any reason all TAP emissions, including fugitive TAPs, are included in the compliance demonstration in the application for the permit to construct. Should you have any questions regarding the fact that all TAPs, including fugitive TAPs, are included in the TAP preconstruction compliance demonstration submitted with a permit to construct application you may call the Air Permit Hotline at 877-5PERMIT.

Will the new or modified source result in new or increased potential emissions of TAPs?

☒ Yes. If yes, continue to section II.

☐ No. If no, no further action is required.

II. Application Content

If a new source has the potential to emit a TAP, or if a modification to an existing source increases the potential to emit of a TAP, then one of the following methods (A-J) of demonstrating TAP preconstruction compliance must be documented for each TAP. Standard methods are one of A-C. The applicant may also use one of the specialized methods in D-J. Fugitive TAP emissions shall be included in the analysis. The compliance methods are based on the requirements of Rules Section 210. Applicants are often able to demonstrate preconstruction TAP compliance using a combination of methods A and B.

Emission Calculations

Emissions calculation methodologies used are dependent on whether a specific TAP is a non-carcinogen or a carcinogen and whether the compliance method chosen from the list below calls

for controlled or uncontrolled emissions. Non-carcinogens are regulated based on a 24-hour averaging period and emission rates used for comparison to the non-carcinogen screening emissions level (EL) should be the maximum controlled or uncontrolled emissions quantity during any 24-hour period divided by 24. Carcinogens are regulated as a long term increment and emission rates used for comparison to the carcinogen EL should be the maximum controlled or uncontrolled emissions quantity during any 1 year period divided by 8760.

Modeling Analyses

Atmospheric dispersion modeling is required when controlled TAP emissions rates exceed ELs. Modeling analyses should be conducted in accordance with IDAPA 58.01.01.210.03. Quantification of Ambient Concentrations and the State of Idaho Air Quality Modeling Guideline (http;//www.deq.idaho.gov/air/data_reports/publications.cfm#model). For non-carcinogen 24-hour increments, compliance is demonstrated using the maximum modeled 24-hour-averaged concentration from available meteorological data (typically a five-year data set). For carcinogen long-term increments, compliance is demonstrated using the maximum modeled average concentration for the duration of the data set (one-year to five-year data set).

A submitted modeling report should clearly specify modeled emissions rates and results. All electronic model input files should be submitted, including BPIP input files.

Polyaromatic Hydrocarbons

Questions often arise regarding polyaromatic hydrocarbons as they are listed in Rules Section 586 of the Rules. The following two points are provided for clarification.

1) The following group of 7 PAH's (i.e. named POM), shall be combined and considered as one TAP equivalent in potency to benzo(a)pryrene:

   Benzo(a)anthracene, benzo(b)fluoranthene, benzo(k)fluoranthene, dibenzo(a, h) anthrancene, chrysene, indeno(1,2,3,-cd) pyrene, benzo (a) pyrene

2) All other PAHs are considered as a single pollutant and the emission of each is compared the PAH increment listed in Rules Section 586.

Compliance Methods

Fill in letter(s) (A-J) from the list below for TAP compliance demonstration method(s) used: C.

A. TAPs Compliance Using Uncontrolled Emissions (Rules Section 210.05)

☐ Calculate the uncontrolled emissions (Rules Section 210.05) of each TAP from new emissions units. Uncontrolled emission rates are emissions at maximum capacity without the effect of physical or operational limitations. See Quantification of Emission Rates (Rules Section 210.02). Show calculations and state all assumptions.

☐ Calculate the increase of TAP emissions from modified emissions units. Show calculations and state all assumptions. The increase in emissions for a modified emission unit is determined by subtracting the potential to emit the TAP before the modification from the uncontrolled potential to emit after the modification. In conducting this analysis please note the following for TAP emission rate increase determinations:

Uncontrolled emission rates after the modification are emissions at maximum capacity without the effect of physical or operational limitations.

When determining the emissions increase from existing permitted emissions units the emission rate before the modification is equivalent to the emission limits contained in the permit for the

TAPs or, if there no emission limits in the permit, by determining what the emission rate is under the physical or operational limitations contained in the permit.

☐ Aggregate the uncontrolled emissions for each TAP from all new emissions units with the increase in emissions from all modified emissions units.

☐ If the aggregated emissions increase for each TAP from the new and modified units, as determined above, are less than or equal to the respective TAP screening emissions level (EL) then preconstruction compliance with toxic standards has been demonstrated and no further analysis is required. Submit a table comparing the uncontrolled emissions rate to the applicable EL.

If aggregated emissions are greater than the respective screening emissions level (EL) for any pollutants, use another compliance demonstration method for those pollutants, such as methods B, C, or D.

B. TAP Compliance Using Uncontrolled Ambient Concentration (Rules Section 210.06)

☐ Determine the uncontrolled emissions of each TAP from new emission units and the increase in emissions from all modified emissions units as described above in compliance Method A. Show calculations and state all assumptions.

☐ Model the uncontrolled emissions of each TAP from new emissions units and the increase in emissions from all modified emissions units.

☐ If the uncontrolled ambient concentration is less than or equal to the acceptable ambient concentration increment listed in Rules Section 585 and 586 no further procedures for demonstrating preconstruction compliance will be required for that TAP as part of the application process. Submit a table comparing uncontrolled ambient concentrations to the applicable acceptable ambient concentration.

C. TAP Compliance Using Controlled Ambient Concentrations (Rules Section 210.08)

☒ Determine the controlled emissions from new emissions units and the controlled emission increase from modified emissions units. Show all calculations and state all assumptions, including the control methods.

The controlled emissions from the facility are below the TAP ELs listed in Section 585 and 586 (see attached EI). Per the modeling guideline, if controlled emissions are below the TAP ELs, then compliance with the ambient standards has been demonstrated:

"Controlled Emissions. Comparing controlled emissions to the ELs is not listed as an option in the regulations for demonstrating preconstruction compliance with TAPs. However, since using the controlled ambient concentration is listed as an option (Idaho Air Rules Section 210.08), and it has been shown (in non-site-specific modeling conducted for the development of the TAP rules) that if emissions are below the ELs then ambient concentrations will be below TAPs increments of Idaho Air Rules Section 585 and 586, it follows that controlled ambient concentrations will be below TAPs increments of Idaho Air Rules Section 585 and 586 if controlled emissions are below the ELs. Therefore, if controlled emissions are below ELs, compliance with TAPs has been demonstrated via Idaho Air Rules Section 210.08"[1]

Based on this guidance, compliance with the TAPs ELs is demonstrated and no further modeling demonstration is required.

[1] *State of Idaho Guideline for Performing Air Quality Impact Analysis, pages 12 and 13.*

☐ Model the controlled emissions of each TAP from new emissions units and the increase in controlled emissions from all modified emissions units.

TAP emissions levels (EL) included in Rules Section 585 and 586 are derived based on generic modeling. If the sum of the emissions from new and modified sources is below the EL compliance is demonstrated without the need to conduct site-specific dispersion modeling.

☐ If the controlled ambient concentration from emission increases from new emissions units and modified emissions units is less than the applicable acceptable ambient concentration no further procedures for demonstrating preconstruction compliance are required.

☐ The Department shall include an emission limit for the TAP in the permit to construct that is equal to or, if requested by the applicant, less than the emission rate that was used in the modeling (Rules Section 210.08.c).

In some instances the Department may consider a throughput limit or other inherently-limiting operational restriction in a permit as an effective emission limit for the TAP, rather than including a specific emission rate limit. Note that the applicant may model uncontrolled emissions as described in compliance Method B in an attempt to avoid TAPs emissions limitations.

D. TAPs Compliance for NSPS and NESHAP Sources (Rules Section 210.20)

☐ If the owner or operator demonstrates that the TAP emissions from the source or modification is regulated by 40 CFR Part 60, 40 CFR Part 61 or 40 CFR Part 63, no further procedures for demonstrating preconstruction compliance will be required for that TAP.

☐ Provide a demonstration that the TAP is regulated under 40 CFR Part 60, 40 CFR Part 61 or 40 CFR Part 63. This demonstration must be specific for each TAP emitted.

E. TAP Compliance Using Net Emissions (Rules Section 210.09)

An applicant may use TAP net emissions to show preconstruction compliance; however this analysis may require more work than some of the others procedures available to demonstrate preconstruction compliance. When netting, all emissions increases and decreases of the TAP that have occurred within five years must be included in the analysis as described below.

☐ Determine the net emission increase for a TAP. A net emissions increase shall be an emission increase from a particular modification plus any other increase and decreases in actual emissions at the facility that are creditable and contemporaneous with particular modification (Rules Section 210.09). Show all calculations and state all assumptions.

☐ A creditable increase or decrease in actual emissions is contemporaneous with a particular modification if it occurs within five (5) years of the commencement of the construction or modification (Rules Section 210.09.a).

Actual emissions are (Rules Section 006.03):

☐ In general, actual emissions as of a particular date shall equal the average rate, in tons per year, at which the unit actually emitted the pollutant during a two year period which precedes the particular date and which is representative of normal source operation. The Department shall allow the use of a different time period upon a determination that it is more representative of normal source operation. Actual emissions shall be calculated using the unit's actual operating hours, productions rates, and types of materials processed, stored, or combusted during the selected time period.

☐ The Department may presume that the source-specific allowable emissions for the unit are equivalent to actual emissions of the unit.

☐ For any emission unit (except electric utility steam generating units) that has not begun normal operations on the particular date, actual emissions shall equal the potential to emit of the unit on that date.

☐ Do not include emissions increases from emission units that have an uncontrolled emission rate that is 10% or less than the applicable screening emission level (EL) in Rules Section 585 and 586 (Rules Section 007.09.c.ii) and do not include emission increases from environmental remediation sources (Rules Section 007.09.c.iii). Show all calculations and state all assumptions.

☐ If the net emission increase is less than or equal to the applicable screening emissions level (EL) listed in Rules Section 585 and 586, no further procedures for demonstrating preconstruction compliance will be required (Rules Section 210.09.c).

☐ The Department shall include emission limits and other permit terms for the TAP in the permit to construct that will assure that the facility will be operated in the manner described in the preconstruction compliance demonstration (Rules Section 210.09.d).

In some instances the Department may consider a throughput limit or other inherently-limiting operational restriction in a permit as an effective emission limit for the TAP. rather than including a specific emission rate limit..

F. TAP Compliance Using Net Ambient Concentration (Rules Section 210.10)

☐ Determine the emission increase from the new source or modification, and all other creditable emission increases and decrease using the methods described above in compliance Method E.

☐ Model the emissions increases and decreases for each TAP. Modeling TAP decreases is accomplished by using negative valued emissions rates in the model input.

☐ If the net ambient concentration is less than or equal to the applicable ambient concentration increment listed in Rules Section 585 and 586, no further procedures for demonstrating preconstruction compliance are required.

☐ The Department shall include emission limits and other permit terms for the TAP in the permit to construct that will assure that the facility will be operated in the manner described in the preconstruction compliance demonstration (Rules Section 210.10.d).

In some instances the Department may consider a throughput limit or other inherently-limiting operational restriction in a permit as an effective emission limit for the TAP, rather than including a specific emission rate limit.

G. TAP Compliance Using T-RACT Ambient Concentration for Carcinogens (Rules Section 210.12)

The applicant may use T-RACT to demonstrate preconstruction compliance for TAPs listed in Rules Section 586 only.

T-RACT is an emissions standard based on the lowest emission of TAPs that a particular source is capable of meeting by application of control technology that is reasonably available, as determined by the Department, considering technological and economic feasibility. If control technology is not feasible, the emission standard may be based on the application of a design,

equipment, work practice or operational requirement, or combination thereof (Rules Section 007.16).

T-RACT Submittal Requirements

☐ The applicant shall submit the following information to the Department identifying and documenting which control technologies or other requirements the applicant believes to be T-RACT (Rules Section 210.14).

The technical feasibility of a control technology or other requirements for a particular source shall be determined considering several factors including but not limited to:

☐ Process and operating procedures, raw materials and physical plant layout.

☐ The environmental impacts caused by the control technology that can not be mitigated, including but not limited to, water pollution and the production of solid wastes.

☐ The energy requirements of the control technology.

The economic feasibility of a control technology or other requirement, including the costs of necessary mitigation measures, for a particular source shall be determined considering several factors including, but not limited to:

☐ Capital costs.

☐ Cost effectiveness, which is the annualized cost of the control technology divided by the amount of emission reduction.

☐ The difference in costs between the particular source and other similar sources, if any, that have implemented emissions reductions.

☐ Compare the source's or modification's approved T-RACT ambient concentration to the applicable acceptable ambient concentration increment listed in Rules Section 586 multiplied by a factor of 10. If the sources approved T-RACT concentration is less than or equal to 10 times the applicable acceptable ambient concentration increment listed in Rules Section 586, no further procedures for demonstrating preconstruction compliance will be required.

☐ If an application is submitted to the Department without T-RACT and determined complete, and T-RACT is later determined to be applicable the completeness determination of the application will be revoked until a supplemental application is submitted and determined complete. When the supplemental application is determined complete, the timeline for agency action shall be reinitiated (Rules Section 210.13.b).

☐ If the Department determines that the source has proposed T-RACT, the Department shall develop emission standards to be incorporated into a permit to construct.

In some instances, the Department may consider a throughput limit or other inherently limiting operational restriction in a permit as an effective emission limit for the TAP, rather than including a specific emission rate limit..

H. TAP Compliance Using the Short Term Source Factor (Rules Section 210.15)

☐ For short term sources, the applicant may utilize a short term adjustment factor of ten (10) only for a carcinogenic pollutant listed in Rules Section 586. For a carcinogen listed in Rules Section 586 multiply either the applicable acceptable ambient concentration increment or the screening

emission rate (EL), but not both, by ten (10) to demonstrate preconstruction compliance (Rules Section 210.15).

☐ A short term source is any new stationary source or modification to an existing source, with an operational life no greater than five (5) years from the inception of any operations to cessation of actual operations (Rules Section 210.15).

I. TAP Compliance for Environmental Remediation Sources (Rules Section 210.16)

☐ For remediation sources subject to or regulated by the Resource Conservation and Recovery Act and the Idaho Rules and Standard for Hazardous Waste, or the comprehensive Environmental Response, Compensation and Liability Act or a consent order, if the estimated ambient concentration is greater than the acceptable ambient impact increment listed in Rules Section 585 and 586, Best Available Control Technology shall be applied and operated until the estimated uncontrolled emission from the remediation source are below the applicable acceptable ambient concentration increment (Rules Section 210.16).

J. TAP Compliance Using Offset Ambient Concentration (Rules Section 210.11)

☐ Contact the Department prior to proposing to utilize Offset Ambient Concentrations to demonstrate preconstruction compliance.

☐ Emission offsets must satisfy the requirements for emission reduction credits (Rules Section 460).

- The proposed level of allowable emissions must be less than the actual emissions of the emissions units providing the offsets (Rules Section 460.01).
- An air quality permit must be issued that restricts the potential to emit of the emission unit providing the offset.
- Emission reduction imposed by local, state or federal regulations or permits shall not be allowed.

☐ Compare the source's or modifications approved emission offset ambient concentration to the applicable acceptable ambient concentration listed in Rules Section 585 and 586. If the source's or modifications approved offset concentration is less than the acceptable ambient concentration listed in Rules Section 585 and 586, no further procedures for demonstrating preconstruction compliance will be required.

☐ The Department shall include emission limits and other permit terms for the TAP in the permit to construct that will assure that the facility will be operated in the manner described in the preconstruction compliance demonstration (Rules Section 210.10.d).

STATE OF IDAHO
DEPARTMENT OF
ENVIRONMENTAL QUALITY

Version 1, August 2010

Facility Wide Potential to Emit Emission Inventory

Application Template and Instructions

For new stationary sources provide the facility's potential to emit for all NSR Regulated Air Pollutants. The potential to emit provided here must match the emissions rates which are requested to be permitted.

For modifications to existing facilities (including the addition of new emissions units), if the existing facility classification is in question an existing facility wide potential to emit emission inventory will be required to be submitted[1]. Contact DEQ to determine if a facility wide emission inventory for the existing facility is required.

All emissions inventories must be submitted with thorough documentation. The emission inventories will be subjected to technical review. Therefore, prepare your application with sufficient documentation so that the public and DEQ can verify the validity of the emission estimates. **Applications submitted without sufficient documentation are incomplete. Follow the instructions provided on page 2; do not proceed until you have read the instructions.**

Applicants must use the Potential to Emit Summary table provided below. *
** Please see attached EI.*

Table 1. POTENTIAL TO EMIT FOR NSR REGULATED POLLUTANTS

Emissions Unit	PM	PM10	PM2.5	CO	Lead	NO2[a]
	T/yr	T/yr	T/yr	T/yr	T/yr	T/yr
Point Sources						
Please see attached EI.	*Please see attached EI.*	*Please see attached EI.*	*Please see attached EI.*	*Please see attached EI.*	*Please see attached EI.*	*Please see attached EI.*
Fugitive Sources *{For listed source categories only, see item 3 below in the instructions}*						
Totals	0.00	0.00	0.00	0.00	0.00	0.00

a) NSR Regulated air Pollutants are defined[2] as: Particulate Matter (PM, PM-10, PM-2.5), Carbon Monoxide, Lead, Nitrogen Dioxide, Ozone (VOC), Sulfur Dioxide, CO_2e[3], Green House Gases (GHG) mass, all pollutants regulated by

---

[1] The applicant must determine if the existing facility is a major facility. If the facility is an existing PSD major facility and changes are being made to the facility the major modification test must be conducted.

[2] 40 CFR 52.21(b)(50), as incorporated by reference at IDAPA 58.01.01.107.03.d

[3] Multiply each greenhouse gas (GHG) by the global warming potential (GWP) listed at 40 CFR 98, Table A- 1 of Subpart A then sum all values to determine CO_2e (GHGs are carbon dioxide, nitrous oxide, methane, hydrofluorcarbons, perfluorcarbons, sulfur hexafluoride). Be sure to show all calculations as described in the instructions.

NSPS (40 CFR 60)(i.e. TRS, fluoride, sulfuric acid mist) & Class I & Class II Ozone Depleting Substances (40 CFR 82)(i.e. CFC, HCFC, Halon, etc.)

Applicants are encouraged to call DEQ's Air Quality Permit Hotline (1-877-573-7648) to ask questions as they prepare the application.**Emission Inventory Instructions:**

1. Use the same emission unit name throughout the application (i.e. in air pollution control equipment forms and for modeling purposes).

2. The application must **show in detail all calculations** used to develop the PTE summary and include:

   - Electronic copies of any spreadsheets used to estimate emissions. If a spreadsheet is used submit an electronic copy of the spread sheet (i.e. Excel File).
   - Documentation of all calculations conducted by hand (i.e. show all calculations).
   - Clear statements on all assumptions relied upon in estimating emissions.
   - Documentation of the emissions factors used to estimate emissions. If the emissions factor documentation is readily available to DEQ, such as an EPA AP-42 emissions factor, a simple reference to the emissions factor suffices. If the emissions factor documentation is not readily available to DEQ the applicant must submit the documentation with the application; ask DEQ if you are uncertain. **Applications without sufficient documentation are incomplete.** Documentation may consist of manufacturer guarantees, research conducted by trade organizations, published emission factors, and source test results. **If there are multiple factors for a given operation, note why the factor used is the most representative.**
   - Copies of manufacturer guarantees upon which emission inventories are based.
   - The best available emission information (see DEQ's Guidance on Emission Data Hierarchy).
   - If source tests are used as the basis for emissions estimates the source test report must be submitted. If the source test report is on file with DEQ provide the date of the source test was submitted along with the name of the facility and the emission unit that was tested. Source data from similar emissions units may be considered reliable provided it is clearly described why the sources are similar. Similar sources are those that the applicant has shown serve a similar function, use similar raw materials, and have similar processing rates.

3. Fugitive emissions of NSR regulated air pollutants from the source categories listed below must be included in the emission inventory.

Listed Source Categories for Inclusion of Fugitive Emissions

- Coal cleaning plants (with thermal dryers)
- Kraft pulp mills
- Portland cement plants
- Primary zinc smelters
- Iron and steel mills
- Primary aluminum ore reduction plants
- Primary copper smelters
- Municipal incinerators -250 T/day of refuse
- Hydrofluoric, sulfuric, or nitric acid plants
- Petroleum refineries
- Lime plants
- Phosphate rock processing plants
- Coke oven batteries
- Sulfur recovery plants
- Carbon black plants (furnace process)
- Primary lead smelters
- Fuel conversion plants
- Sintering plants
- Secondary metal production plants
- Chemical process plants (excluding ethanol plants by natural fermentation).
- Fossil-fuel fired boilers totaling more than 250 MMBtu/hr
- Petroleum storage and transfer units with total capacity of 300,000 barrels
- Taconite ore processing plants
- Glass fiber processing plants
- Charcoal production plants
- Fossil fuel-fired steam electric plants greater than 250 MMBtu/hr)
- Categories regulated by NSPS or NESHAP prior to 8/7/80

STATE OF IDAHO
DEPARTMENT OF
ENVIRONMENTAL QUALITY

Version 2, January 2011

Ambient Impact Assessment Emission Inventory for New Minor Facilities and Minor Modifications

Application Template and Instructions

New Minor Facilities or Minor Modifications to Existing Facilities

Applicants must demonstrate that the source will not cause or significantly contribute to a violation of an ambient air quality standard for criteria pollutants[1]. As described in the State of Idaho Air Quality Modeling Guideline, there are three methods that an applicant can use to demonstrate compliance:

Method 1. Demonstrate that emissions from the new and/or modified existing facility are below air quality modeling thresholds that are listed in the State of Idaho Air Quality Modeling Guideline.

Method 2. Demonstrate that emissions from the new and/or modified source will not cause ambient impacts at or above significant ambient impact levels (Significant Impact Analysis or Preliminary Analysis).

Method 3. Demonstrate that facility wide emissions, when combined with co-contributing sources and background levels, do not cause an exceedance of ambient standards (Cumulative Analysis).

The type of emission inventory required depends upon which method is used to demonstrate compliance. In the following pages the type of emission inventory that is required to be submitted is discussed for each method. DEQ strongly recommends that the applicant develop and submit for DEQ approval a written modeling protocol prior to submitting the application (refer to the State of Idaho Air Quality Modeling Guideline). The modeling protocol must address what types of emission inventories are required for modeling, and address which fugitive emissions must be included.

All modeling emission inventories must be summarized using the emission inventory summary table provided below (Table 1).

The applicant must document all emission calculations and follow the emission inventory instructions provided. **Applications without sufficient documentation are incomplete; do not proceed until you have read the instructions on page 6.**

[1] Rules for the Control of Air Pollution in Idaho (IDAPA 58.01.01.203 & 403)

Table 1 Proposed Emissions

Emissions Unit	Stack or Emissions Point ID[a]	PM_{10}	$PM_{2.5}$		SO_2		NO_x		CO		Lead	
		lb/hr 24-hr Avg.	lb/hr 24-hr Avg.	lb/hr Annual Avg.	lb/hr Max.	lb/hr 3-hr Avg.	lb/hr Max.	lb/hr Annual Avg.	lb/hr Max.	lb/hr 8-hr Avg.	lb/hr monthly Avg.	lb/hr 1/4ly Avg.
Point Sources												
Paint Booth	EP2, EP3	0.005	0.005	0.005	0.0	0.0	0.0	0.0	0.0	0.0	0.0	0.0
Abrasive Blasting Booth	EP1	0.080	0.059	0.059	0.0	0.0	0.0	0.0	0.0	0.0	0.0	0.0
Fugitive Sources												
Welding	EP4 – EP8	0.0907	0.0907	0.0907	0.0	0.0	0.0	0.0	0.0	0.0	2.95E-07	2.95E-07
Paint Booth Space Heaters	EP4 – EP8	1.00188E-05	3.036E-06	3.036E-06	0.00073485	0.00073485	0.069	0.069	0.01725	0.01725	3.65112E-09	3.65112E-09
Shop Space Heaters	EP4 – EP8	0.005754286	0.00575428 6	0.005754286	0.0005	0.0005	0.071	0.071	0.030	0.0 0.030	3.79E-07	3.79E-07

a) Stack or Emissions Point ID must match the ID used in the air dispersion model.

Applicants are encouraged to call DEQ's Air Quality Permit Hotline (1-877-573-7648) to ask questions as they prepare the application.

Following are descriptions of the types of emission inventories that are required for each of the three methods that can be used to demonstrate that the source will not cause or significantly contribute to a violation of ambient air quality standards for criteria pollutants. These descriptions are also covered in the State of Idaho Air Quality Modeling Guideline. The following descriptions are intended to be general guidelines that apply to the vast majority of situations. Even though they cover the vast majority of situations they are not intended to act in place of a DEQ approved modeling protocol that is developed based on consideration of site specific emissions units and air pollution dispersion characteristics.

Method 1

Demonstrate that emissions from the new and/or modified existing facility are below air quality modeling thresholds that are listed in the State of Idaho Air Quality Modeling Guideline.

New facilities

Calculate proposed allowable, or potential to emit, of all new emissions units. "All" emissions units includes those units that would have otherwise qualified for an exemption (do not omit any sources).

Provide an emission inventory summary table for proposed allowable emissions using the template provided above.

The proposed/allowable emissions in Table 1 above demonstrate that the emissions from all sources are below the Level 1 Thresholds for all pollutants except for PM2.5 as presented in the State of Idaho Air Quality Modeling Guideline (see attached EI for detailed calculations). The majority of the PM2.5 emissions come from the welding activities, a fugitive source, vented from six vents in the Fab 2 building (see EI and attached plot plan). The hourly and annual PM2.5 emissions are approximately ¼ and

1/6 of the Level II Modeling Thresholds, respectively. In addition, the nearest private residence is approximately 2,000 feet from the SFW property. The area around Burley is in attainment for all pollutants and does not have complex terrain. For these reasons, SFW does not believe that the ambient air quality standards for PM2.5 are threatened by SFW's operations and a modeling demonstration is not included as part of this application.

STATE OF IDAHO
DEPARTMENT OF
ENVIRONMENTAL QUALITY

Version 1, August 2010

Toxic Air Pollutant Emissions Inventory

Application Template and Instructions

Applicants must demonstrate preconstruction compliance with toxic air pollutant (TAP) standards contained in IDAPA 58.01.01.210 (*Rules for the Control of Air Pollution in Idaho*). DEQ has developed a TAP completeness checklist in order to assist applicants. DEQ strongly recommends that applicants complete and submit this checklist as part of the application. **Applications which do not follow one of the available methods for demonstrating compliance described in the checklist will be determined incomplete or denied.** Follow this link to the checklist: Toxic Air Pollutant Application Completeness Checklist. Be sure to calculate emissions correctly for the averaging periods as described in the checklist and in the instructions on page 3.

The type of TAP emissions inventory required depends upon which method is used to demonstrate compliance (see the Toxic Air Pollutant Application Completeness Checklist). **All TAP emissions inventories must be summarized using the emissions inventory summary tables provided below** (Table 1 and Table 2).

The applicant must **document all emission calculations as described in the instructions provided on the following page. Applications without sufficient documentation are incomplete; do not proceed until you have read the instructions.**

Applicants are encouraged to call DEQ's Air Quality Permit Hotline (1-877-573-7648) to ask questions as they prepare the application.

Table 1. PRE- AND POST PROJECT NON-CARCINOGENIC TAP EMISSIONS SUMMARY
POTENTIAL TO EMIT

Non-Carcinogenic Toxic Air Pollutants (sum of all emissions)	Pre-Project 24-hour Average Emissions Rates for Units at the Facility (lb/hr)	Post Project 24-hour Average Emissions Rates for Units at the Facility (lb/hr)	Change in 24-hour Average Emissions Rates for Units at the Facility (lb/hr)	Non-Carcinogenic Screening Emission Level (lb/hr)	Exceeds Screening Level? (Y/N)
See attached E.I.	*See attached E.I.*	*See attached E.I.*	*See attached E.I.*	*See attached E.I.*	*See attached E.I.*
See attached E.I.	*See attached E.I.*	*See attached E.I.*	*See attached E.I.*	*See attached E.I.*	*See attached E.I.*
See attached E.I.	*See attached E.I.*	*See attached E.I.*	*See attached E.I.*	*See attached E.I.*	*See attached E.I.*
See attached E.I.	*See attached E.I.*	*See attached E.I.*	*See attached E.I.*	*See attached E.I.*	*See attached E.I.*
See attached E.I.	*See attached E.I.*	*See attached E.I.*	*See attached E.I.*	*See attached E.I.*	*See attached E.I.*
See attached E.I.	*See attached E.I.*	*See attached E.I.*	*See attached E.I.*	*See attached E.I.*	*See attached E.I.*
See attached E.I.	*See attached E.I.*	*See attached E.I.*	*See attached E.I.*	*See attached E.I.*	*See attached E.I.*
See attached E.I.	*See attached E.I.*	*See attached E.I.*	*See attached E.I.*	*See attached E.I.*	*See attached E.I.*
See attached E.I.	*See attached E.I.*	*See attached E.I.*	*See attached E.I.*	*See attached E.I.*	*See attached E.I.*
See attached E.I.}	*See attached E.I.*	*See attached E.I.*	*See attached E.I.*	*See attached E.I.*	*See attached E.I.*

Table 2. PRE- AND POST PROJECT CARCINOGENIC TAP EMISSIONS SUMMARY POTENTIAL TO EMIT

Carcinogenic Toxic Air Pollutants (sum of all emissions)	Pre-Project Annual Average Emissions Rates for Units at the Facility (lb/hr)	Post Project Annual Average Emissions Rates for Units at the Facility (lb/hr)	Change in Annual Average Emissions Rates for Units at the Facility (lb/hr)	Carcinogenic Screening Emission Level (lb/hr)	Exceeds Screening Level? (Y/N)
See attached E.I.	*See attached E.I.*	*See attached E.I.*	*See attached E.I.*	*See attached E.I.*	*See attached E.I.*
See attached E.I.	*See attached E.I.*	*See attached E.I.*	*See attached E.I.*	*See attached E.I.*	*See attached E.I.*
See attached E.I.	*See attached E.I.*	*See attached E.I.*	*See attached E.I.*	*See attached E.I.*	*See attached E.I.*
See attached E.I.	*See attached E.I.*	*See attached E.I.*	*See attached E.I.*	*See attached E.I.*	*See attached E.I.*
See attached E.I.	*See attached E.I.*	*See attached E.I.*	*See attached E.I.*	*See attached E.I.*	*See attached E.I.*
See attached E.I.	*See attached E.I.*	*See attached E.I.*	*See attached E.I.*	*See attached E.I.*	*See attached E.I.*
See attached E.I.	*See attached E.I.*	*See attached E.I.*	*See attached E.I.*	*See attached E.I.*	*See attached E.I.*
See attached E.I.	*See attached E.I.*	*See attached E.I.*	*See attached E.I.*	*See attached E.I.*	*See attached E.I.*
See attached E.I.	*See attached E.I.*	*See attached E.I.*	*See attached E.I.*	*See attached E.I.*	*See attached E.I.*

a) *{If you have POM include the following footnote.}* Polycyclic Organic Matter (POM) is considered as one TAP comprised of: benzo(a)anthracene, benzo(b)fluoranthene, benzo(k)fluoranthene, dibenzo(a,h)anthracene, chrysene, indeno(1,2,3-cd)pyrene, benzo(a)pyrene. The total is compared to benzo(a)pyrene.

Pre-project average emissions are the existing allowable emission rates.

Post-project average emissions are the new proposed emission rates.

STATE OF IDAHO
DEPARTMENT OF
ENVIRONMENTAL QUALITY

Version 1, August 2010

Facility Wide Hazardous Air Pollutant Potential to Emit
Application Template and Instructions

Provide the facility wide potential to emit for all Hazardous Air Pollutants (HAPs). **The potential to emit provided here must match the emissions rates which are requested to be permitted.**

HAPs are pollutants that are required to be regulated under the Clean Air Act. A list of the HAPs may be found by following this link: HAP list; review the list carefully to be sure you have included all listed HAPs.

All emissions inventories must be submitted with thorough documentation. The emission inventories will be subjected to technical review; prepare your application with sufficient documentation so that either the public or DEQ can verify the validity of the emission estimates. **Applications submitted without sufficient documentation are incomplete. Follow the instructions provided on the following page; do not proceed until you have read the instructions.**

Applicants must use the Potential to Emit Summary table provided below. Identify the individual HAP with the highest emissions and total HAP emissions. The potential to emit provided here must match the emissions rates which are requested to be permitted. **All fugitive emissions of HAPs must be included.**

Table X HAP POTENTIAL TO EMIT EMISSIONS SUMMARY

HAP Pollutants	PTE (T/yr)
See Attached EI	*See Attached EI*
See Attached EI	*See Attached EI*
See Attached EI	*See Attached EI*
See Attached EI	*See Attached EI*
See Attached EI	*See Attached EI*
See Attached EI	*See Attached EI*
See Attached EI	*See Attached EI*

* Maximum Individual HAP

Applicants are encouraged to call DEQ's Air Quality Permit Hotline (1-877-573-7648) to ask questions as they prepare the application.

Southern Field Welding

Criteria Pollutant Maximum PTE With Existing Controls

0.091

Maximum Annual Potential to Emit

Activity/Source	Point Source or Fugitive	NOx T/yr	NOx (lb/hr)	SO2 T/yr	SO2 (lb/hr)	CO T/yr	CO (lb/hr)	VOC T/yr	VOC (lb/hr)	Pb T/yr	Pb (lb/hr)	Pb (lb/month)	PM T/yr	PM (lb/hr)	PM10 T/yr	PM10 (lb/hr)	PM2.5 T/yr	PM2.5 (lb/hr)	CO2e T/yr	CO2 (lb/hr)
Paint Booth	Point	-	-	-	-	-	-	19.58	4.5	-	-	-	-	-	0.006	0.005	0.006	0.005	-	-
Welding Operations	Fugitive	-	-	-	-	-	-	-	-	1.3E-06	2.95E-07	0.0002	-	-	0.397	0.0907	0.397	0.0907	-	-
Abrasive Blasting	Point	-	-	-	-	-	-	-	-	-	-	-	2.46	0.56	0.35	0.080	0.26	0.059	-	-
Paint Booth Space Heaters	Fugitive	0.30	0.069	0.0032	0.000735	0.076	0.01725	0.008402	0.001918	1.6E-08	3.65112E-09	0.000	0.00	1.00188E-05	0.00	1.00188E-05	0.000	3.036E-06	338.3	77.2
Shop Space Heaters	Point	0.312	0.071	0.002	0.0005	0.133	0.030	0.018	0.004	1.66E-06	3.79E-07	0.000	0.03	0.005754286	0.03	0.005754286	0.025	0.005754286	400.4	91.4

	NOx T/yr	NOx (lb/hr)	SO2 T/yr	SO2 (lb/hr)	CO T/yr	CO (lb/hr)	VOC T/yr	VOC (lb/hr)	Pb T/yr	Pb (lb/hr)	Pb (lb/month)	PM T/yr	PM (lb/hr)	PM10 T/yr	PM10 (lb/hr)	PM2.5 T/yr	PM2.5 (lb/hr)	CO2e T/yr	CO2 (lb/hr)
Totals:	0.614	0.140	0.005	0.001	0.208	0.048	19.608	4.477	0.000	0.000	0.000	2.487	0.568	0.781	0.182	0.686	0.160	738.712	168.656
Above 100 tpy Threshold for Criteria Pollutants?	No	-	No	-	No	-	No	-	No	-	-	No	-	No	-	No	-	-	-
IDAPA 58.01.006.106 Significant Emission Rates:	40	9.1	40.0	9.1	100	22.81	40	9.1	0.6	-	-	25	-	15	3.4	10	2.3	-	-
Above SER Threshold:	No	No	No	No	No	No	No	No	No	-	-	No	-	No	No	No	No	-	-
IDAPA 58.01.006.106 Significant Emission Rates Below Regulatory Concern:	4	-	4	-	10	-	4	-	0.06	-	-	2.5	-	1.5	-	1.0	-	-	-
Above SER Threshold:	No	-	No	-	No	-	Yes	-	No	-	-	No	-	No	-	No	-	-	-
Level I Modeling Threshold:	1.2	0.2	1.2	0.21	-	15	-	-	-	-	14	-	-	-	0.22	0.35	0.054	-	-
Above Level I Modeling Threshold:	No	No	No	No	-	No	-	-	-	-	No	-	-	-	No	Yes	Yes	-	-
Level II Modeling Threshold:	14	2.4	14	2.5	-	175	-	-	-	-	14	-	-	-	2.6	4.1	0.63	-	-
Above Level II Modeling Threshold:	No	No	No	No	-	No	-	-	-	-	No	-	-	-	No	No	No	-	-
Idaho Air Rules Section 006 Modeling Threshold:	40	9.1	40	9.1	100	28.1	40	9.1	-	-	-	-	-	15	3.4	10	2.3	-	-
Above Section 006 Modeling Threshold:	No	No	No	No	No	No	No	No	-	-	-	-	-	No	No	No	No	-	-

Southern Field Welding
Criteria Pollutant Maximum PTE With Existing Controls

POTENTIAL TO EMIT FOR NSR REGULATED POLLUTANTS

Emissions Unit	Point or Fugitive	NOx T/yr	SO2 T/yr	CO T/yr	VOC T/yr	Pb T/yr	PM T/yr	PM10 T/yr	PM2.5 T/yr	CO2e T/yr	GHG Mass T/yr
Paint Booth	Point	-	-	-	19.58	-	-	0.00633	0.00633	-	
Welding Operations	Fugitive	-	-	-	-	1.29E-06	-	0.39742	0.39742	-	
Abrasive Blasting	Point	-	-	-	-	-	2.462	0.35171	0.25672	-	
Paint Booth Space Heaters	Fugitive	0.30222	0.003219	0.07556	0.0084017	1.6E-08	4E-05	1.3E-05	1.3E-05	338.3361	336.97996
Shop Space Heaters	Point	0.311730857	0.00199	0.13265	0.0182396	1.66E-06	0.0252	0.0252	0.0252	400.3762	397.96921
	Totals	**0.614**	**0.005**	**0.208**	**19.608**	**0.000**	**2.487**	**0.781**	**0.686**	**738.712**	**734.949**

Notes:
Although SFW's operations are not one of the 28 listed souce categories for Inclusion of Fugitive Emissions, the fugitive sources are noted here for informational purposes.

Southern Field Welding

Toxic Air Pollutants and HAPs Summary Information

CAS#	CAS# (No Hyphens)	Toxic Air Pollutant	Sources	Maximum Emission Rate (lbs/hr)	Maximum Emission Rate (tpy)	Idaho Air Quality Rules Emission Rate Threshold	Below IDAPA Section 585 or 586 Criteria	Level of Regulatory Concern	Below Level of Regulatory Concern?	HAP	PAH/POM[a]	Listed in 40 CFR Part 98 Table A-1 (GHG)
71-55-6	71556	1,1,1-Trichloroethane (aka Methly Chloroform)	Paint Booth Space Heaters	8.1E-07	3.6E-06	127	Yes	12.7	Yes	Yes	No	No
25551-13-7	25551137	1,2,4 TMB	Paint Booth	0.0000	0.0000	8.2	Yes	0.82	Yes	No	No	No
91-57-6	91578	2-Methylnaphthalene	Shop Space Heaters	0.0000	0.0000					Yes	No[c]	No
56-49-5	56495	3-Methylcholanthrene	Shop Space Heaters	0.0000	0.0000					Yes	No[c]	No
		7,12-Dimethylbenz(a)anthracene	Shop Space Heaters	0.0000	0.0000					Yes	No[c]	No
67-64-1	67641	acetone	Paint Booth	0.2568	1.1248	119	Yes	11.9	Yes	No	No	No
83-32-9	83329	Acenaphthene	Paint Booth Space Heaters, Shop Space Heaters	0.0000	0.0000					Yes	No[c]	No
208-96-8	208968	Acenaphthylene	Paint Booth Space Heaters	0.0000	0.0000	-	Yes	0.00E+00	Yes	No	No	No
7429-90-5	7429905	aluminum (particulate)	Paint Booth	0.0000	0.0000	0.667	Yes	0.0667	Yes	Yes	No	No
628-63-7	628637	amyl acetate	Paint Booth	0.0000	0.0000	35.3	Yes	3.53	Yes	No	No	No
120-12-7	120127	Anthracene	Paint Booth Space Heaters, Shop Space Heaters	0.0000	0.0000					Yes	No[c]	No
64742-95-6	64742956	aromatic hydrocarbon	Paint Booth	0.1131	0.4952					Yes	No[c]	No
7440-36-0	7440360	antimony and compounds (particulate)	Paint Booth	0.0000	0.0000	0.033	Yes	0.0033	Yes	Yes	No	No
7440-39-3	7440393	barium (soluble compounds) (particulate)	Paint Booth	0.0000	0.0000	0.033	Yes	0.0033	Yes	No	No	No
71-43-2	71432	Benzene	Paint Booth Space Heaters, Shop Space Heaters	0.0000	0.0000	8.00E-04	Yes	0.00008	Yes	Yes	No	No
56-55-3	56553	Benz(a)anthracene[b]	Paint Booth Space Heaters, Shop Space Heaters	0.0000	0.0000	9.10E-05	Yes	0.0000091	Yes	Yes	Yes	No
205-99-2, 205-82-3	205992, 205823	Benzo(b,k)fluoranthene[b]	Paint Booth Space Heaters, Shop Space Heaters	0.0000	0.0000	9.10E-05	Yes	0.0000091	Yes	Yes	Yes	No
191-24-2	191242	Benzo(g,h,i)perylene	Paint Booth Space Heaters, Shop Space Heaters	0.0000	0.0000					Yes	No[c]	No
50-32-8	50328	Benzo(a)pyrene[b]	Shop Space Heaters	0.0000	0.0000	9.10E-05	Yes	0.0000091	Yes	Yes	Yes	No
123-86-4	123864	butyl acetate	Paint Booth	0.0000	0.0000	47.3	Yes	4.73	Yes	No	No	No
106-97-8	106978	Butane	Shop Space Heaters	0.0016	0.0070					No	No	No
1333-86-4	1333864	carbon black (particulate)	Paint Booth	0.0000	0.0000	0.23	Yes	0.023	Yes	No	No	No
7440-47-3	7440473	chromium III (particulate)	Paint Booth Welding, Shop Space Heaters, Paint Booth Space Heaters	7.18E-08	3.14E-07	0.033	Yes	0.0033	Yes	Yes	No	No
218-01-9	218019	Chrysene[b]	Paint Booth Space Heaters, Shop Space Heaters	9.57E-09	4.19E-08	9.10E-05	Yes	0.0000091	Yes	Yes	Yes	No
110-82-7	110827	cyclohexane	Paint Booth	0.0000	0.0000	70	Yes	7	Yes	No	No	No
53-70-3	53703	Dibenzo(a,h)anthracene[b]	Paint Booth Space Heaters, Shop Space Heaters	0.0000	0.0000	9.10E-05	Yes	0.0000091	Yes	Yes	Yes	No
2532-22-6	2532226	Dichlorobenzene	Shop Space Heaters	0.0000	0.0000	0.00E+00	Yes	0	Yes	Yes	No	No
74-84-0	74840	Ethane	Shop Space Heaters	0.0023	0.0103					No	No	No
763-39-9	763399	ethyl 3-ethoxy propionate	Paint Booth	0.0000	0.0000					No	No	No
141-78-6	141786	ethyl acetate	Paint Booth	0.0000	0.0000	93.3	Yes	9.33	Yes	No	No	No
64-17-5	64175	ethyl alcohol	Paint Booth	0.0000	0.0000	125	Yes	12.5	Yes	No	No	No
100-41-4	100414	ethyl benzene	Paint Booth, Paint Booth Space Heaters	0.0000	0.0000	29	Yes	2.9	Yes	Yes	No	No
110-49-6	110496	ethylene glycol monobutyl ether acetate	Paint Booth	0.0000	0.0000	1.6	Yes	0.16	Yes	No	No	No
206-44-0	205440	Fluoranthene	Paint Booth Space Heaters, Shop Space Heaters	0.0000	0.0000				Yes	Yes	No[c]	No
86-73-7	86737	Fluorene	Paint Booth Space Heaters, Shop Space Heaters	0.0000	0.0000				Yes	Yes	No[c]	No
50-00-0	50000	Formaldehyde	Paint Booth Space Heaters, Shop Space Heaters	1.71E-04	0.0007	5.10E-04	Yes	0.000051	No	Yes	No	No
142-82-5	142825	heptane	Paint Booth	0.0000	0.0000	109	Yes	10.9	Yes	No	No	No
822-06-0	822060	hexamethylene diisocyanate	Paint Booth	0.0000	0.0000	0.002	Yes	0.0002	Yes	Yes	No	No
193-39-5	193395	Indeno(1,2,3-cd)pyrene[b]	Paint Booth Space Heaters, Shop Space Heaters	0.0000	0.0000	9.10E-05	Yes	0.0000091	Yes	Yes	Yes	No
4098-71-9	4098719	isophorone diisocyanate	Paint Booth	0.0000	0.0000	0.006	Yes	0.0006	Yes	No	No	No
67-63-0	67630	isopropyl alcohol	Paint Booth	0.0000	0.0000	65.3	Yes	6.53	Yes	No	No	No
110-43-0	110430	methyl amyl ketone	Paint Booth	0.0000	0.0000	15.7	Yes	1.57	Yes	No	No	No
78-93-3	78933	MEK	Paint Booth	0.4103	1.7968	39.3	Yes	3.93	Yes	Yes	No	No
108-10-1	108101	Methyl Isobutyl Ketone (MIBK) (HAP)	Paint Booth	0.0000	0.0000	13.7	Yes	1.37	Yes	Yes	No	No
		mineral spirits	Paint Booth	0.5189	2.2728	NA	Yes	NA	Yes	No	No	No
3268-87-9	3268879	OCDD[c]	Paint Booth Space Heaters	0.0000	0.0000	1.50E-10	Yes	NA	Yes	No	No	No
71-36-3	71363	n-butyl alcohol	Paint Booth	0.0000	0.0000	10	Yes	1	Yes	No	No	No
110-54-3	110543	n-hexane	Shop Space Heaters	0.0014	0.0060	12	Yes	1.2	Yes	Yes	No	No
91-20-3	91203	naphthalene	Paint Booth, Paint Booth Space Heaters, Shop Space Heaters	0.0000	0.0000	3.33	Yes	0.333	Yes	Yes	No	No
109-66-0	109660	Pentane	Shop Space Heaters	0.0020	0.0085	116	Yes	11.6	Yes	No	No	No
85-01-8	85018	Phenanthrene	Paint Booth Space Heaters, Shop Space Heaters	0.0000	0.0000					Yes	No[c]	No
7664-38-2	7664382	phosphoric acid	Paint Booth	0.0000	0.0000	0.067	Yes	0.0067	Yes	No	No	No
74-98-6	74986	Propane	Shop Space Heaters	0.0012	0.0053					No	No	No
79-09-4	79094	propanoic acid	Paint Booth	0.0000	0.0000	2	Yes	0.2	Yes	No	No	No
107-98-2	107982	propylene glycol monomethyl ether acetate	Paint Booth	0.0000	0.0000	24	Yes	2.4	Yes	No	No	No
129-00-0	129000	Pyrene	Paint Booth Space Heaters, Shop Space Heaters	0.0000	0.0000					Yes	No[c]	No
61790-53-2	61790532	silica (particulate)	Paint Booth	0.0000	0.0001	0.667	Yes	0.0667	Yes	Yes	No	No
108-88-3	108883	toluene	Paint Booth, Paint Booth Space Heaters, Shop Space Heaters	0.4297	1.8825	25	Yes	2.5	Yes	Yes	No	No
8032-32-4	8032324	VM&P naphtha	Paint Booth	0.1411	0.6181	91.3	Yes	9.13	Yes	No	No	No
1330-20-7	1330207	xylene	Paint Booth, Paint Booth Space Heaters	1.9250	8.4313	29	Yes	2.9	Yes	Yes	No	No
25068-38-6	25068386	Epoxy Resin	Paint Booth	1.0097	4.4224					No	No	No
12001-26-2	12001262	Mica	Paint Booth	0.0001	0.0003	0.2	Yes	0.02	Yes	No	No	No
68609-97-2	68609972	Alkyl Glycidyl Ether	Paint Booth	0.2330	1.0208					No	No	No
13463-67-7	13463677	Titanium Dioxide	Paint Booth	0.0777	0.3402					No	No	No
68082-29-1	68082291	Polymer of C-18 Unsaturated Fatty Acid	Paint Booth	0.1635	0.7159					No	No	No
112-24-3	112243	Triethylenetetramine	Paint Booth	0.0817	0.3580					No	No	No
28182-81-2	28182812	Hexane, 1,6-Diisocyanato-, Homopolymer	Paint Booth	0.3148	1.3787					No	No	No
67-56-1	67561	Methyl Alcohol	Paint Booth	0.2691	1.1787	17.3	Yes	1.73	Yes	Yes	No	No
111-76-2	111762	Ethylene Glycol Monobutyl Ether	Paint Booth	0.0286	0.1253	8	Yes	0.8	Yes	No	No	No
7440-38-2	7440382	Arsenic (As)	Shop Space Heaters, Paint Booth Space Heaters	1.53E-07	6.70E-07	1.50E-06	Yes	1.50E-07	No	Yes	No	No
7440-39-3	7440393	Barium (Ba)	Shop Heaters	3.33E-06	1.46E-05	3.30E-02	Yes	3.30E-03	Yes	No	No	No
7440-41-7	7440417	Beryllium (Be)	Shop Space Heaters, Paint Booth Space Heaters	1.03E-06	4.51E-06	2.80E-05	Yes	2.80E-06	Yes	Yes	No	No
7440-43-9	7440439	Cadmium (Cd)	Shop Space Heaters, Paint Booth Space Heaters	8.34E-07	3.65E-06	3.70E-06	Yes	3.70E-07	No	Yes	No	No
7440-47-3	7440473	Chromium (Cr (VI))	Welding	2.00E-08	8.74E-08	6E-07	Yes	5.60E-08	Yes	Yes	No	No
7440-48-4	7440484	Cobal (Co)	Welding, Shop Heaters	9.20E-08	4.03E-07	3E-03	Yes	3.30E-04	Yes	Yes	No	No
7440-50-8	7440508	Copper (Cu)	Shop Space Heaters, Paint Booth Space Heaters	6.48E-07	2.83E-06	1E-02	Yes	1.30E-03	Yes	No	No	No
7439-96-5	7439965	Manganese (Mn)	Welding, Shop Space Heaters, Paint Booth Space Heaters	1.78E-05	7.69E-05	3E-01	Yes	3.33E-02	Yes	Yes	No	No
7439-97-6	7439976	Mercury (Hg)[d]	Shop Space Heaters, Paint Booth Space Heaters	1.38E-02	6.02E-06	2.5E+01	Yes	2.50E+00	Yes	Yes	No	No
7439-98-7	7439987	Molybdenum (Mo)	Shop Heaters	6.33E-07	3.65E-06	3E-01	Yes	3.33E-02	Yes	No	No	No
7440-02-0	7440020	Nickel (Ni)	Welding, Shop Space Heaters, Paint Booth Space Heaters	1.69E-06	7.40E-06	3E-05	Yes	2.70E-06	Yes	Yes	No	No
7782-49-2	7782492	Selenium (Se)	Shop Space Heaters, Paint Booth Space Heaters	2.43E-08	1.06E-07	1E-02	Yes	1.30E-03	Yes	Yes	No	No
7440-62-2	7440622	Vanadium (V)	Shop Heaters	1.74E-08	7.63E-08	3E-03	Yes	3.00E-04	Yes	No	No	No
7440-66-6	7440666	Zinc (Zn)	Shop Space Heaters, Paint Booth Space Heaters	2.20E-05	9.62E-05	7E-01	Yes	6.67E-02	Yes	No	No	No

Total PAH/POMs	
lbs/hr	4.89E-08
Tons/year	2.14E-07
IDAPA Threshold (lbs/hr)	0.000091
Meet Threshold	Yes

Total HAPs	
lbs/hr	3.15
Tons/year	13.75
Below 25 tpy total:	Yes
Max Single HAP:	Xylene
Max Single HAP Emissions (tpy):	6.43
Meet Less than 10 tpy for any single HAP?	Yes

Notes

[a] Hg standard is in lbs/year.

PAH/POM for comparison to emission threshold in IDAPA 58.01.01.586. Polycyclic Organic Matter (POM) is considered as one TAP composed of: benzo(a)anthracene, benzo(b)fluoranthene, benzo(k)fluoranthene, dibenzo(a,h)anthracene, chrysene, indeno(1,2,3-cd)pyrene, benzo(a)pyrene. The total is compared to benzo(a)pyrene.

[b] Used emission level of 2,3,7,8, -TCDD for screening.

[c] Not equivalent to listed PAH/POM mixtures in IDAPA 58.01.01.586.

Southern Field Welding

Welding Emissions

Actual Hours of Operation:	2600
Potential Hours of Operation:	8760
Calculated Scaling Factor:	3.369

Type of Welding	Welding Rod Name/Model	Type of Electrode from AP-42 Chapter 12.19	Emission Factor (lb-PM10/1000 lb-electrode)	2011 Annual Use Rates (lb/yr)	Actual Annual PM10 Emissions (lb-PM10/yr)	Scaling Factor to Calculate Maximum PTE	Maximum Electrode Use (lb/year)	Maximum PM10 Emission Rate (lb PM10/yr)	Maximum PM10 Emission Rate (lb PM10/hr)	Maximum PM10 Emission Rate (tons PM10/yr)	Maximum PM2.5 Emission Rate (tons PM2.5/yr)[3]
SMAW	LINCOLN 308L-V3/32X8	E308	10.8	16	0.1728	3.369	53.9	0.582203077	0.00007	0.000291102	0.000291102
SMAW	LINCOLN Excalibur 309 SS	E310[2]	15.1	8	0.1208	3.369	27.0	0.407003077	0.00005	0.000203502	0.000203502
SMAW	LINCOLN 309-V1/8X8	E310[2]	15.1	8	0.1208	3.369	27.0	0.407003077	0.00005	0.000203502	0.000203502
SMAW	LINCOLN 309/309L-V MR 1/8X12	E310[2]	15.1	8	0.1208	3.369	27.0	0.407003077	0.00005	0.000203502	0.000203502
SMAW	LINCOLN 309/309L-V3/32X12	E310[2]	15.1	8	0.1208	3.369	27.0	0.407003077	0.00005	0.000203502	0.000203502
SMAW	LINCOLN EXCAL1/8 7018	E7018	18.4	1150	21.16	3.369	3874.6	71.29292308	0.00814	0.035646462	0.035646462
SMAW	LINCOLN EXCAL3/32 7018	E7018	18.4	1400	25.76	3.369	4716.9	86.79138462	0.00991	0.043395692	0.043395692
SMAW	LINCOLN FWSP+1/8 6010	E6010	25.6	900	23.04	3.369	3032.3	77.62707692	0.00886	0.038813538	0.038813538
SMAW	LINCOLN FWSP+3/32 6010	E6010	25.6	350	8.96	3.369	1179.2	30.18830769	0.00345	0.015094154	0.015094154
SMAW	UTP 85 FN Cast Iron	ENi-CI[1]	18.2	3	0.0546	3.369	10.1	0.18396	0.00002	0.00009198	0.00009198
GMAW	Murex Muromatic S4 Plus	E70S[4]	5.2	2910	15.132	3.369	9804.461538	50.9832	0.00582	0.0254916	0.0254916
FCAW	Hobart Fabshield 21B	E71T	12.2	10	0.122	3.369	33.69230769	0.411046154	4.7E-05	0.000205523	0.000205523
GMAW	Hobart HB 28 #11	E70S	5.2	20	0.104	3.369	67.38461538	0.3504	0.00004	0.0001752	0.0001752
FCAW	Hobart Arc 71	E71T	12.2	10626	129.64	3.369	35,801.4	436.7776	0.0499	0.2184	0.2184
FCAW	Lincoln Wire Outershield 71M	E71T	12.2	925	11.29	3.369	3,116.5	38.0238	0.0043	0.0190	0.0190
GTAW[3]	Alcotec Aluminum TIG Wire	NA		30							
GTAW[3]	UTP 309L	NA		33							
GTAW[3]	UTP ER308L	NA	-	530							
GTAW[3]	SOW ER70S	NA		20							
Brazing[3]	NA										
			Totals:	18,342	235.91		61796.43	794.84	0.09	0.40	0.40

Type of Welding	Welding Rod Name/Model	Type of Electrode from AP-42	HAP Emission Factor from AP-42 Chapter 12.19 (1 lb/1000 lb of Electrode)					
			Cr	Cr (VI)	Co	Mn	Ni	Pb
SMAW	LIN 308L-V3/32X8	E308	0.393	3.59	0.01	2.520	0.430	0
SMAW	Lincoln Excalibar 309 SS	E310[2]	2.53	1.88	0	2.200	0.196	0.024
SMAW	LINCOLN 309-V1/8X8	E310[2]	2.53	1.88	0	2.200	0.196	0.024
SMAW	LINCOLN 309/309L-V MR 1/8X12	E310[2]	2.53	1.88	0	2.200	0.196	0.024
SMAW	LINCOLN 309/309L-V3/32X12	E310[2]	2.53	1.88	0	2.200	0.196	0.024
SMAW	LINCOLN EXCAL1/8 7018	E7018	0.006	0	0.001	1.030	0.002	0
SMAW	LINCOLN EXCAL3/32 7018	E7018	0.006	0	0.001	1.030	0.002	0
SMAW	LINCOLN FWSP+1/8 6010	E6010	0.003	0.001	0	0.991	0.004	0
SMAW	LINCOLN FWSP+3/32 6010	E6010	0.003	0.001	0	0.991	0.004	0
SMAW	UTP 85 FN Cast Iron	ENi-CI[1]	0	0	0	0.390	8.900	0
GMAW	Murex Muromatic S4 Plus	E70S[4]	0.01	0	0.01	3.180	0.000	0
FCAW	Hobart Fabshield 21B	E71T	0.02	0	0.01	6.62	0.04	0
GMAW	Hobart HB 28 #11	E70S	0.01	0	0.01	3.180	0.000	0
FCAW	Hobart Arc 71	E71T	0.02	0	0.01	6.620	0.040	0
FCAW	Lincoln Wire Outershield 71M	E71T	0.02	0	0.01	6.620	0.040	0

Southern Field Welding
Welding Emissions

Pollutant	Welding Rod Name/Model	Maximum Emissions (lb/hr)	Maximum Emissions (tpy)	Total HAP lb/hr	Total HAP tpy	IDAPA Emission Level (lb/hr)	IDAPA Level of Regulatory Concern	Meets IDAPA Emission Level?	Meets IDAPA Level of Regulatory Concern?
Cr	LIN 308L-V3/32X8	1.21E-09	1.06E-05	7.1E-08	6.18E-04	3.3E-02	3.3E-03	Yes	Yes
	Lincoln Excalber 309 SS	3.89E-09	3.41E-05						
	LINCOLN 309-V1/8X8	3.89E-09	3.41E-05						
	LINCOLN 309/309L-V MR 1/8X12	3.89E-09	3.41E-05						
	LINCOLN 309/309L-V3/32X12	3.89E-09	3.41E-05						
	LINCOLN EXCAL1/8 7018	1.33E-09	1.16E-05						
	LINCOLN EXCAL3/32 7018	1.62E-09	1.42E-05						
	LINCOLN FWSP+1/8 6010	5.19E-10	4.55E-06						
	LINCOLN FWSP+3/32 6010	2.02E-10	1.77E-06						
	UTP 85 FN Cast Iron	0.00E+00	0.00E+00						
	Murex Muremalic S4 Plus	5.60E-09	4.90E-05						
	Hobart Fabshield 21B	3.85E-11	3.37E-07						
	Hobart HB 28 #11	3.85E-11	3.37E-07						
	Hobart Arc 71	4.09E-08	3.58E-04						
	Lincoln Wire Outershield 71M	3.56E-09	3.12E-05						
Cr (VI)	LIN 308L-V3/32X8	1.10E-08	9.68E-05	2.0E-08	1.75E-04	5.6E-07	5.6E-08	Yes	Yes
	Lincoln Excalber 309 SS								
	LINCOLN 309-V1/8X8	2.89E-09	2.53E-05						
	LINCOLN 309/309L-V MR 1/8X12	2.89E-09	2.53E-05						
	LINCOLN 309/309L-V3/32X12	2.89E-09	2.53E-05						
	LINCOLN EXCAL1/8 7018								
	LINCOLN EXCAL3/32 7018								
	LINCOLN FWSP+1/8 6010	1.73E-10	1.52E-06						
	LINCOLN FWSP+3/32 6010	6.73E-11	5.90E-07						
	UTP 85 FN Cast Iron	0.00E+00	0.00E+00						
	Murex Muremalic S4 Plus	0.00E+00	0.00E+00						
	Hobart Fabshield 21B	0.00E+00	0.00E+00						
	Hobart HB 28 #11	0.00E+00	0.00E+00						
	Hobart Arc 71	0.00E+00	0.00E+00						
	Lincoln Wire Outershield 71M	0.00E+00	0.00E+00						
Co	LIN 308L-V3/32X8	3.08E-11	2.70E-07	2.8E-08	2.49E-04	3.3E-03	3.3E-04	Yes	Yes
	Lincoln Excalber 309 SS	0.00E+00	0.00E+00						
	LINCOLN 309-V1/8X8	0.00E+00	0.00E+00						
	LINCOLN 309/309L-V MR 1/8X12	0.00E+00	0.00E+00						
	LINCOLN 309/309L-V3/32X12	0.00E+00	0.00E+00						
	LINCOLN EXCAL1/8 7018	2.21E-10	1.94E-06						
	LINCOLN EXCAL3/32 7018	2.69E-10	2.36E-06						
	LINCOLN FWSP+1/8 6010	0.00E+00	0.00E+00						
	LINCOLN FWSP+3/32 6010	0.00E+00	0.00E+00						
	UTP 85 FN Cast Iron	0.00E+00	0.00E+00						
	Murex Muremalic S4 Plus	5.60E-09	4.90E-05						
	Hobart Fabshield 21B	1.92E-11	1.68E-07						
	Hobart HB 28 #11	3.85E-11	3.37E-07						
	Hobart Arc 71	2.04E-08	1.79E-04						
	Lincoln Wire Outershield 71M	1.78E-09	1.56E-05						
Mn	LIN 308L-V3/32X8	7.75E-09	6.79E-05	1.7E-05	1.51E-01	3.3E-01	3.3E-02	Yes	Yes
	Lincoln Excalber 309 SS	3.38E-09	2.96E-05						
	LINCOLN 309-V1/8X8	3.38E-09	2.96E-05						
	LINCOLN 309/309L-V MR 1/8X12	3.38E-09	2.96E-05						
	LINCOLN 309/309L-V3/32X12	3.38E-09	2.96E-05						
	LINCOLN EXCAL1/8 7018	2.28E-07	2.00E-03						
	LINCOLN EXCAL3/32 7018	2.77E-07	2.43E-03						
	LINCOLN FWSP+1/8 6010	1.72E-07	1.50E-03						
	LINCOLN FWSP+3/32 6010	6.67E-08	5.84E-04						
	UTP 85 FN Cast Iron	2.25E-10	1.97E-06						
	Murex Muremalic S4 Plus	1.78E-06	1.56E-02						
	Hobart Fabshield 21B	1.27E-08	1.12E-04						
	Hobart HB 28 #11	1.22E-08	1.07E-04						
	Hobart Arc 71	1.35E-05	1.19E-01						
	Lincoln Wire Outershield 71M	1.18E-06	1.03E-02						

Southern Field Welding

Welding Emissions

Ni	LIN 308L-V3/32X8	1.32E-09	1.16E-05	9.9E-08	8.63E-04	2.7E-05	2.7E-06	Yes	Yes
	Lincoln Excalber 309 SS	3.02E-10	2.64E-06						
	LINCOLN 309-V1/8X8	3.02E-10	2.64E-06						
	LINCOLN 309/309L-V MR 1/8X12	3.02E-10	2.64E-06						
	LINCOLN 309/309L-V3/32X12	3.02E-10	2.64E-06						
	LINCOLN EXCAL1/8 7018	4.42E-10	3.87E-06						
	LINCOLN EXCAL3/32 7018	5.38E-10	4.72E-06						
	LINCOLN FWSP+1/8 6010	6.92E-10	6.06E-06						
	LINCOLN FWSP+3/32 6010	2.69E-10	2.36E-06						
	UTP 85 FN Cast Iron	5.13E-09	4.50E-05						
	Murex Murematic S4 Plus	0.00E+00	0.00E+00						
	Hobart Fabshield 21B	7.69E-11	6.74E-07						
	Hobart HB 28 #11	0.00E+00	0.00E+00						
	Hobart Arc 71	8.17E-08	7.16E-04						
	Lincoln Wire Outershield 71M	7.12E-09	6.23E-05						
Pb[4]	LIN 308L-V3/32X8	0.00E+00	0.00E+00	1.5E-10	1.29E-06	1.0E-02	1.0E-03	Yes	Yes
	Lincoln Excalber 309 SS	3.69E-11	3.23E-07						
	LINCOLN 309-V1/8X8	3.69E-11	3.23E-07						
	LINCOLN 309/309L-V MR 1/8X12	3.69E-11	3.23E-07						
	LINCOLN 309/309L-V3/32X12	3.69E-11	3.23E-07						
	LINCOLN EXCAL1/8 7018	0.00E+00	0.00E+00						
	LINCOLN EXCAL3/32 7018	0.00E+00	0.00E+00						
	LINCOLN FWSP+1/8 6010	0.00E+00	0.00E+00						
	LINCOLN FWSP+3/32 6010	0.00E+00	0.00E+00						
	UTP 85 FN Cast Iron	0.00E+00	0.00E+00						
	Murex Murematic S4 Plus	0.00E+00	0.00E+00						
	Hobart Fabshield 21B	0.00E+00	0.00E+00						
	Hobart HB 28 #11	0.00E+00	0.00E+00						
	Hobart Arc 71	0.00E+00	0.00E+00						
	Lincoln Wire Outershield 71M	0.00E+00	0.00E+00						

Notes:

1 SMAW: Shielded metal arc welding; FCAW = Flux cored arc welding, GMAW = Gas Metal Arc Welding, GTAW = Gas Tungsten Arc Welding.

2 E309 is not listed in table 12.19-1 of AP-14 Chapter 12.19. The emission factor from E310 was used as a surrogate.

3 Assume PM10 = PM2.5

4 Pb HAP emission factor is for Tetramethyl lead, as Pb from IDAPA Section 585.

5 UTP 85 FN Cast Iron is a Nickel - Iron Electrode. ENi CI electrode type was used as a surrogate from AP-42 because it was the highest of the Nickel type of electrodes listed.

6 MSDS indicates that the electrode type is ER70S-4. Used E70S emission factor from AP-42 as surrogate.

7 Emissions from GTAW and brazing are generally considered to be insignificant. No emission factors for these types of welding are included in Chapter 12.19 of AP-42 or in EPA's WebFIRE database. For these reasons, emissions from these types of welding are not included in the EI.

Southern Field Welding
Emissions Estimates from Paint Booth

Actual Hours of Operation:	2600
Potential Hours of Operation:	8760
Calculated Scaling Factor:	3.369

Paint Gun:	Graco ULTRA MAXII 695
Transfer Control Efficiency:	75%
Booth Particulate Pre-Filter:	EMI Filtration Blue/White Poly Roll FL-1000 Tack
Pre-Filter Control Efficiency:	91.2%
Booth Particulate Primary Filter:	Filtrair FF-560 GX
Primary Filter Control Efficiency:	99%
Effective Control Efficiency (Pre and Primary Filter):	99.91%

Manufacturer	Part Code	Coating Usage (gals/year):	lbs VOC/gal of Coating	Density (lb/gal)	Paint Spray Gun Transfer Efficiency (%)	Booth Particulate Filters Effective Control Efficiency (%)	Actual Annual PM10 Emissions (lb PM10/yr)	Actual Hourly PM10 Emissions (lb PM10/hr)	Maximum Annual PM10 Emissions (lb PM10/yr)	Maximum Annual PM10 Emissions (lb PM10/hr)
Valley Paint Manufacturing	003 Gray Primer	33	3.88	10.1988	75%	99.91%	0.1	0.000	0.2	0.000
Valley Paint Manufacturing	009 White Primer	17	4.17	10.41975	75%	99.91%	0.0	0.000	0.1	0.000
Valley Paint Manufacturing	2104 Km Gloss White Silicone	90	3.69	9.20775	75%	99.91%	0.2	0.000	0.6	0.000
Valley Paint Manufacturing	097 Enamel Reducer Medium	180	6.92	6.91793	75%	99.91%	0.3	0.000	0.9	0.000
Valley Paint Manufacturing	2101 Km White Primer	10	3.83	10.489	75%	99.91%	0.0	0.000	0.1	0.000
Valley Paint Manufacturing	2153 White Intermediate Coat	30	4.3	10.51597	75%	99.91%	0.1	0.000	0.2	0.000
Valley Paint Manufacturing	2513 Km Black Sil Alkyd	373	3.78	7.68899	75%	99.91%	0.6	0.000	2.1	0.001
Valley Paint Manufacturing	2516 Black Phenolic Primer	243	4.18	9.95331	75%	99.91%	0.5	0.000	1.8	0.001
Valley Paint Manufacturing	2001 Urethane Activator	165	3.52	8.48334	75%	99.91%	0.3	0.000	1.0	0.000
Valley Paint Manufacturing	2126 Gloss White Silicone Enamel	80	3.29	10.00372	75%	99.91%	0.2	0.000	0.6	0.000
Valley Paint Manufacturing	2106 White Super Speed Enamel	20	4.57	9.41973	75%	99.91%	0.0	0.000	0.1	0.000
Valley Paint Manufacturing	2030 Silicone Mod Clear Enamel	20	3.75	7.63855	75%	99.91%	0.0	0.000	0.1	0.000
Valley Paint Manufacturing	32875 ACRYLIC HARNDER	14	3.52	8.48334	75%	99.91%	0.0	0.000	0.1	0.000
Carboline[1]	PHENOLINE S309F744905D - PART A	375	0.11	10.77	75%	99.91%	0.9	0.000	3.0	0.001
Carboline[1]	PHENOLINE S309F744905D - PART B	75	0.08	8.10	75%	99.91%	0.1	0.000	0.5	0.000
Hotsy[3]	Phosphatizer #2	165	0.45	9.01	75%	99.91%	0.3	0.000	1.1	0.000
	Total Coatings Usage:	1890								
	Maximum Coatings Usage (Using Scaling Factor):	6367.85								

	Actual Annual PM10 Emissions (lb PM10/yr)	Actual Hourly PM10 Emissions (lb PM10/hr)	Maximum Annual PM10 Emissions (lb PM10/yr)	Maximum Annual PM10 Emissions (lb PM10/hr)
Totals (lbs):	3.8	0.0014	12.7	0.0

Maximum Annual PM10 Emissions (tpy)	0.006
Maximum Annual PM2.5 Emissions (tpy)[2]	0.006

Emissions of VOC from AP-42 Chapter 4.2.2.1 General Industrial Surface Coating

Manufacturer	Part Code	Coating Usage (gals/year):	lbs VOC/gal of Coating	Density (lb/gal)	Percent VOC Content (%)	Actual Annual VOC Emissions (lb VOC/yr)	Actual Annual VOC Emissions (lb VOC/hr)	Maximum Annual VOC Emissions (lb VOC/yr)	Maximum Annual VOC Emissions (lb VOC/hr)
Valley Paint Manufacturing	003 Gray Primer	33	3.88	10.1988	-	128.0	0.049	431.40	0.049
Valley Paint Manufacturing	009 White Primer	17	4.17	10.41975	-	70.9	0.027	238.84	0.027
Valley Paint Manufacturing	2104 Km Gloss White Silicone	90	3.69	9.20775	-	332.1	0.128	1,118.92	0.128
Valley Paint Manufacturing	097 Enamel Reducer Medium	194	6.92	6.91793	-	1342.5	0.516	4,523.12	0.516
Valley Paint Manufacturing	2101 Km White Primer	10	3.83	10.489	-	38.3	0.015	129.04	0.015
Valley Paint Manufacturing	2153 White Intermediate Coat	30	4.3	10.51597	-	129.0	0.050	434.63	0.050
Valley Paint Manufacturing	2513 Km Black Sil Alkyd	373	3.78	7.68899	-	1409.9	0.542	4,750.41	0.542
Valley Paint Manufacturing	2516 Black Phenolic Primer	243	4.18	9.95331	-	1015.7	0.391	3,422.26	0.391
Valley Paint Manufacturing	2001 Urethane Activator	165	3.52	8.48334	-	580.8	0.223	1,956.85	0.223
Valley Paint Manufacturing	2126 Gloss White Silicone Enamel	80	3.29	10.00372	-	263.2	0.101	886.78	0.101
Valley Paint Manufacturing	2106 White Super Speed Enamel	20	4.57	9.41973	-	91.4	0.035	307.95	0.035
Valley Paint Manufacturing	2030 Silicone Mod Clear Enamel	20	3.75	7.63855	-	75.0	0.029	252.69	0.029
Carboline	PHENOLINE S309F744905D - PART A	375	0.11	10.77	-	40.4	0.016	136.07	0.016
Carboline	PHENOLINE S309F744905D - PART B	75	0.08	8.10	-	6.1	0.002	20.46	0.002
Hotsy	Phosphatizer #2	165	0.45	9.01		74.4	0.029	250.53	0.029
Univar USA Inc.	Lacquer Thinner B	838	6.805	-	100%	5702.6	2.193	19,213.34	2.193
Crown MEK	Methyl Ethyl Ketone	6	6.7	-	100%	40.2	0.015	135.44	0.015
Crown Xylol	Xylene	39	7.255	-	100%	282.9	0.109	953.31	0.109
	Total Coatings Usage:	2633							
	Maximum Coatings Usage (Using Scaling Factor):	8871.2							

	Actual Annual VOC Emissions (lb VOC/yr)	Actual Annual VOC Emissions (lb VOC/hr)	Maximum Annual VOC Emissions (lb VOC/yr)	Maximum Annual VOC Emissions (lb VOC/hr)
Totals (lbs):	11623.4	4.5	39162.1	4.5
Totals (tons):	5.8	-	19.6	-

Notes

[1] Carboline PHENOLINE 309A has a specific gravity of 1.29 and Phenoline B has a specific gravity of 0.97. Both MSDS sheets state that the volatile components are less than 1%.

[2] Assume PM10 = PM2.5.

[3] Hotsy Phosphatizer 2 has a specific gravity of 1.08. Ethylene Monobutyl Ether is listed as having a weight % of 1 - 5%.

Southern Field Welding
Paint Booth
Toxic Air Pollutants Detail Information

Key
Blue Font = Have MSDS
Red Font = Weight % from MSDS.

Actual Hours of Operation:	2600
Potential Hours of Operation:	8760
Calculated Scaling Factor:	3.369

Manufacturer	Coating Material	Density (lbs/gal)	Actual Coatings Used/year	Maximum Coatings Used/Year	acetone	aromatic hydrocarbon	carbon black (particulate)	MEK	Methyl Isobutyl Ketone (MIBK) (HAP)	mineral spirits	silica (particulate)	toluene	VM&P naphtha	xylene	Epoxy Resin	Mica (particulate)	Alkyl Glycidyl Ether	Titanium Dioxide	Polymer of C-18 Unsaturated Fatty Acid	Triethylenetetramine	Hexane, 1,6-Diisocyanato-, Homopolymer	Methyl Alcohol	Ethylene Glycol Monobutyl Ether
					67-64-1	64742-95-6	1333-86-4	78-93-3	108-10-1		61790-53-2 112926-00-8 14808-60-7	108-88-3	8032-32-4 8030-30-6	1330-20-7	25068-38-6	12001-26-2	68609-97-2	13463-67-7	68082-29-1	112-24-3	28182-81-2	67-56-1	111-76-2
Listed in BAAA Title II Section 112r Listed by 40 CFR 370:					Yes/No	Yes/Yes	No/No	Yes/Yes	Yes/Yes	No/No	No/No	Yes/Yes	No/No	Yes/Yes	No/No	No/No	No/No	No/No	No/No	No/No	No/No	Yes/Yes	Yes/Yes
Valley Paint Manufacturing	900 Gray Primer	10.2900	23	111.1846154	0.00%	0.00%	0.00%	0.00%	0.00%	0.00%	0.00%	0.00%	0.00%	0.00%	0.00%	0.00%	0.00%	0.00%	0.00%	0.00%	0.00%	0.00%	0.00%
Valley Paint Manufacturing	1/K White Primer	10.41900	17	57.27692308	0.00%	0.00%	0.00%	0.00%	0.00%	0.00%	0.00%	0.00%	0.00%	0.00%	0.00%	0.00%	0.00%	0.00%	0.00%	0.00%	0.00%	0.00%	0.00%
Valley Paint Manufacturing	1104 Km Gloss White Silicone	9.01270	197	381.2307692	0.00%	0.00%	0.00%	0.00%	0.00%	75.00%	3.00%	0.00%	0.00%	0.00%	0.00%	0.00%	0.00%	0.00%	0.00%	0.00%	0.00%	0.00%	0.00%
Valley Paint Manufacturing	1107 Enamel Reducer Medium	6.81700	144	443.8461538	0.00%	0.00%	0.00%	0.00%	0.00%	0.00%	0.00%	30.00%	12.00%	0.00%	0.00%	0.00%	0.00%	0.00%	0.00%	0.00%	0.00%	3.00%	0.00%
Valley Paint Manufacturing	1161 Km White Primer	10.4900	170	57.69230769	0.00%	0.00%	0.00%	0.00%	0.00%	0.00%	0.00%	0.00%	22.50%	22.00%	0.00%	0.00%	0.00%	0.00%	0.00%	0.00%	0.00%	0.00%	0.00%
Valley Paint Manufacturing	1193 White Intermediate Coat	10.51100	93	351.0769231	0.00%	0.00%	0.00%	0.00%	0.00%	0.00%	0.00%	0.00%	0.00%	41.00%	0.00%	0.00%	0.00%	0.00%	0.00%	0.00%	0.00%	0.00%	0.00%
Valley Paint Manufacturing	2K Low Gloss SF Clear	7.58000	241	1246.769231	0.00%	0.00%	0.00%	0.00%	0.00%	25.00%	0.00%	0.00%	0.00%	0.00%	0.00%	0.00%	0.00%	0.00%	0.00%	0.00%	0.00%	0.00%	0.00%
Valley Paint Manufacturing	2K16 Black Phenolic Primer	8.96100	240	828.9230769	0.00%	0.00%	3.00%	0.00%	0.00%	0.00%	0.00%	0.00%	0.00%	42.00%	0.00%	0.00%	0.00%	0.00%	0.00%	0.00%	0.00%	0.00%	0.00%
Valley Paint Manufacturing	2003 Urethane Activator	8.74200	283	933.9230769	0.00%	21.00%	0.00%	0.00%	0.00%	0.00%	0.00%	0.00%	0.00%	30.00%	0.00%	0.00%	0.00%	0.00%	0.00%	0.00%	10.00%	0.00%	0.00%
Valley Paint Manufacturing	2130 Gloss White Silicone Urethane	10.04100	90	308.1538462	0.00%	0.00%	0.00%	0.00%	0.00%	0.00%	0.00%	0.00%	0.00%	41.00%	0.00%	0.00%	0.00%	0.00%	0.00%	0.00%	0.00%	0.00%	0.00%
Valley Paint Manufacturing	2106 White Super Speed Enamel	8.41871	203	67.18461538	0.00%	0.00%	0.00%	0.00%	0.00%	0.00%	0.00%	0.00%	0.00%	41.00%	0.00%	0.00%	0.00%	0.00%	0.00%	0.00%	0.00%	0.00%	0.00%
Valley Paint Manufacturing	2020 Reverse Mixed Clear Enamel	7.82851	31	87.59661538	0.00%	0.00%	0.00%	0.00%	0.00%	49.00%	0.00%	0.00%	0.00%	0.00%	0.00%	0.00%	0.00%	0.00%	0.00%	0.00%	0.00%	0.00%	0.00%
Catalyst	PHENOLINE 530HT44 WOLD - PART A	10.11	134	1261.461538	0.00%	0.00%	1.00%	0.00%	0.00%	0.00%	1.00%	0.00%	0.00%	0.00%	60.00%	0.00%	10.00%	3.00%	0.00%	0.00%	0.00%	0.00%	0.00%
Catalyst	PHENOLINE 530HT44 WOLD - PART B	8.33	99	931.6923077	0.00%	0.00%	0.00%	0.00%	0.00%	0.00%	0.00%	0.00%	0.00%	0.00%	0.00%	0.00%	0.00%	0.00%	0.00%	0.00%	0.00%	0.00%	0.00%
Putty	Polyester #3	9.01	107	355.9230769	0.00%	0.00%	0.00%	0.00%	0.00%	0.00%	0.00%	0.00%	0.00%	0.00%	0.00%	0.00%	0.00%	0.00%	0.00%	0.00%	0.00%	0.00%	0.00%
Thinners																							
Thinner/Solvent	Lacquer Thinner B	6.831	218	831.4615385	0.00%	0.00%	0.00%	18.00%	0.00%	0.00%	0.00%	100.00%	0.00%	100.00%	0.00%	0.00%	0.00%	0.00%	0.00%	0.00%	0.00%	0.00%	0.00%
Wash MEK	Methyl Ethyl Ketone	6.7	6	20.21538462	0.00%	0.00%	0.00%	100.00%	0.00%	0.00%	0.00%	0.00%	0.00%	0.00%	0.00%	0.00%	0.00%	0.00%	0.00%	0.00%	0.00%	0.00%	0.00%
Wash Solv	Toluene	7.355	20	181.4	0.00%	0.00%	0.00%	0.00%	0.00%	0.00%	0.00%	100.00%	0.00%	100.00%	0.00%	0.00%	0.00%	0.00%	0.00%	0.00%	0.00%	0.00%	0.00%

Paint Gun Transfer Efficiency (control for particulates)

75% Graco ULTRA MAXI II95

Particulate Filter Control Efficiency (control for particulates)

95 ±1%, Pre-Filter and Primary Filter

	Actual Coatings Use/yea	Maximum Coatings Use/Year
Total:	2,773	9,343
Gallons/hr:	1.067	1.07
Gallons/day:	10.665	25.60

Calculated Maximum Emission Rate Per Pollutant (lb/hr)

Manufacturer	Coating Material	Density (lb/gal)	Actual Coatings Use/year	Maximum Coatings Use/Year	acetone	aromatic hydrocarbon	carbon black (particulate)	MEK	Methyl Isobutyl Ketone (MIBK) (HAP)	mineral spirits	silica (particulate)	toluene	VM&P naphtha	xylene	Epoxy Resin	Mica (particulate)	Alkyl Glycidyl Ether	Titanium Dioxide	Polymer of C-18 Unsaturated Fatty Acid	Triethylenetetramine	Hexane, 1,6-Diisocyanato-, Homopolymer	Methyl Alcohol	Ethylene Glycol Monobutyl Ether	HAP
Valley Paint Manufacturing	001 Gray Primer	10.20	33	111.185	0.00	0.00	0.00	0.00	0.00	0.00	0.00	0.00	0.00	0.03	0.00	0.00	0.00	0.00	0.00	0.00	0.00	0.00	0.00	0.03
Valley Paint Manufacturing	009 White Primer	10.42	17	57.377	0.00	0.00	0.00	0.00	0.00	0.00	0.00	0.00	0.00	0.03	0.00	0.00	0.00	0.00	0.00	0.00	0.00	0.00	0.00	0.03
Valley Paint Manufacturing	2104 Km Gloss White Silicone	9.21	80	303.231	0.00	0.00	0.00	0.00	0.08	0.00	0.00	0.00	0.00	0.01	0.00	0.00	0.00	0.00	0.00	0.00	0.00	0.00	0.00	0.01
Valley Paint Manufacturing	097 Enamel Reducer Medium	8.92	194	653.631	0.05	0.00	0.00	0.00	0.00	0.00	0.20	0.11	0.00	0.00	0.00	0.00	0.00	0.00	0.00	0.00	0.00	0.00	0.00	0.20
Valley Paint Manufacturing	2101 Km White Primer	10.49	10	33.692	0.00	0.00	0.00	0.00	0.00	0.00	0.00	0.00	0.00	0.01	0.00	0.00	0.00	0.00	0.00	0.00	0.00	0.00	0.00	0.01
Valley Paint Manufacturing	2153 White Intermediate Coat	10.52	30	101.077	0.00	0.00	0.00	0.00	0.00	0.00	0.00	0.00	0.00	0.05	0.00	0.00	0.00	0.00	0.00	0.00	0.00	0.00	0.00	0.05
Valley Paint Manufacturing	2313 Km Black Sil Alkyd	7.69	373	1256.723	0.00	0.00	0.00	0.00	0.00	0.31	0.00	0.00	0.00	0.07	0.00	0.00	0.00	0.00	0.00	0.00	0.00	0.00	0.00	0.07
Valley Paint Manufacturing	2516 Black Phenolic Primer	9.95	243	818.773	0.00	0.00	0.00	0.00	0.00	0.00	0.00	0.00	0.00	0.39	0.00	0.00	0.00	0.00	0.00	0.00	0.00	0.00	0.00	0.39
Valley Paint Manufacturing	2001 Urethane Activator	8.48	165	555.923	0.00	0.11	0.00	0.00	0.00	0.00	0.00	0.00	0.00	0.11	0.00	0.00	0.00	0.00	0.00	0.00	0.11	0.00	0.00	0.11
Valley Paint Manufacturing	2126 Gloss White Silicone Enamel	10.00	80	269.538	0.00	0.00	0.00	0.00	0.00	0.10	0.00	0.00	0.00	0.00	0.00	0.00	0.00	0.00	0.00	0.00	0.00	0.00	0.00	0.00
Valley Paint Manufacturing	2106 White Super Speed Enamel	9.42	20	67.385	0.00	0.00	0.00	0.00	0.00	0.00	0.00	0.00	0.01	0.01	0.00	0.00	0.00	0.00	0.00	0.00	0.00	0.00	0.00	0.01
Valley Paint Manufacturing	2030 Silicone Mod Clear Enamel	7.64	20	67.385	0.00	0.00	0.00	0.00	0.00	0.01	0.00	0.00	0.00	0.00	0.00	0.00	0.00	0.00	0.00	0.00	0.00	0.00	0.00	0.00
Carboline	PHENOLINE 5309F744905D - PART A	10.77	375	1263.462	0.00	0.00	0.00	0.00	0.00	0.00	0.00	0.00	0.00	1.01	0.00	0.23	0.08	0.00	0.00	0.00	0.00	0.00	0.00	1.32
Carboline	PHENOLINE 5309F744905D - PART B	8.10	75	252.692	0.00	0.00	0.00	0.00	0.00	0.00	0.00	0.00	0.00	0.00	0.00	0.00	0.00	0.00	0.16	0.00	0.00	0.00	0.00	0.00
Hotsy	Phosphatizer #2	9.01	185	555.923	0.00	0.00	0.00	0.00	0.00	0.00	0.00	0.00	0.00	0.00	0.00	0.00	0.00	0.00	0.00	0.00	0.00	0.00	0.03	0.00
Univar USA Inc	Lacquer Thinner B	0.00	0	0.000	0.21	0.00	0.00	0.39	0.00	0.00	0.00	0.21	0.00	1.10	0.00	0.00	0.00	0.00	0.00	0.00	0.00	0.00	0.27	0.00	1.32
Crown MEK	Methyl Ethyl Ketone	6.81	838	2823.415	0.00	0.00	0.00	0.02	0.00	0.00	0.00	0.00	0.00	0.00	0.00	0.00	0.00	0.00	0.00	0.00	0.00	0.00	0.00	0.00
Crown Xylol	Xylene	6.70	6	20.215	0.00	0.00	0.00	0.00	0.00	0.00	0.00	0.00	0.00	0.11	0.00	0.00	0.00	0.00	0.00	0.00	0.00	0.00	0.00	0.11
	Max:				0.21	0.11	0.00	0.39	0.00	0.31	0.00	0.22	0.11	1.10	1.01	0.23	0.08	0.00	0.16	0.00	0.11	0.27	0.03	1.32

		acetone	aromatic hydrocarbon	carbon black (particulate)	MEK	Methyl Isobutyl Ketone (MIBK) (HAP)	mineral spirits	silica (particulate)	toluene	VM&P naphtha	xylene	Epoxy Resin	Mica (particulate)	Alkyl Glycidyl Ether	Titanium Dioxide	Polymer of C-18 Unsaturated Fatty Acid	Triethylenetetramine	Hexane, 1,6-Diisocyanato-, Homopolymer	Methyl Alcohol	Ethylene Glycol Monobutyl Ether	HAP
Note:	Total lb/hr:	0.257	0.113	0.000	0.415	0.000	0.319	0.000	0.421	0.141	1.025	1.010	0.000	0.238	0.078	0.183	0.082	0.315	0.259	0.029	2.346
Columns are hidden for materials with a 0% weight from MSDS in order to minimize printing area.	Total lb/gallon:	0.241	0.106	0.000	0.389	0.000	0.487	0.000	0.394	0.132	1.605	0.947	0.000	0.218	0.073	0.153	0.077	0.295	0.252	0.027	2.199
	Max lb/gallon (xylene)																				
	IDAPA TAP EL (lb/hr)	119	NA	0.23	39.3	13.7	NA	0.887	25	91.3	29	NA	0.2	NA	NA	NA	NA	NA	17.3	8	NA
	Below Threshold?	Yes	NA	Yes	Yes	Yes	NA	Yes	Yes	Yes	Yes	NA	Yes	NA	NA	NA	NA	NA	Yes	Yes	NA
	IDAPA TAP EL Level of Regulatory Concern (lb/hr)	11.9		0.023	3.93	1.37		0.0887	2.5	9.13	2.9	NA	0.02	NA	NA	NA	NA	NA	1.73	0.8	
	Below SRC?	Yes		Yes	Yes	Yes		Yes	Yes	Yes	Yes	Yes	Yes	Yes	Yes	Yes	Yes	Yes	Yes	Yes	

Southern Field Welding

Paint Booth Space Heater Emissions

Hours of Operation: 8760
Sulfur Weight %: 0.0015 Ultra Low Sulfur Diesel
Particulate Control from Paint Booth[c]: 99.91% See Paint Booth Emissions Summary

Building Heaters
AP-42 Chapter 1.3 Fuel Oil Combustion

													GHGs		
Heater #	Heat Rate (Btu/hr)	Heat Rate (mmBtu/hr)	Diesel Usage (gal/hr)	NOx (lb/hr)	NOX (tpy)	SO2 (tpy)	CO (tpy)	VOC (tpy)	Pb (tpy)	PM (tpy)	PM10 (tpy)	PM2.5 (tpy)	CO2 (tpy)	CH4(tpy)	N2O(tpy)
1	111000	0.1110	0.8500	0.017	0.07	0.0008	0.0186	0.0021	3.85E-09	1.08E-05	3.28E-06	3.28E-06	83.0229	0.0001	0.0011
2	175000	0.1750	1.3000	0.026	0.11	0.0012	0.0285	0.0032	6.07E-09	1.65E-05	5.01E-06	5.01E-06	126.9762	0.0001	0.0016
3	175000	0.1750	1.3000	0.026	0.114	0.0012	0.0285	0.0032	6.07E-09	1.65E-05	5.01E-06	5.01E-06	126.9762	0.0001	0.0016
Total:		0.4610	3.4500	0.0690	0.3022	0.0032	0.0756	0.0084	1.60E-08	4.39E-05	1.33E-05	1.33E-05	336.9753	0.0003	0.0044

tpy
338.34

Pollutant	Emission Factors Distillate Fuel Oil	
NOx	20 lb/10^3 gal	Table 1.3-1
CO	5 lb/10^3 gal	Table 1.3-1
SO2[a]	0.213 lb/10^3 gal	Table 1.3-1
VOC[b]	0.556 lb/10^3 gal	Table 1.3-3
PM (Total Filterable + Condensable)	3.3 lb/10^3 gal	Table 1.3-1 and Table 1.3-2
PM10	1 lb/10^3 gal	Table 1.3-6
PM2.5	0.25 lb/10^3 gal	Table 1.3-6
CO2	22300 lb/10^3 gal	Table 1.3-12
CH4	0.216 lb/10^3 gal	Table 1.3-3
CH4 GWP	21	40 CFR 98, Table A- 1 of Subpart A
N2O	0.26 lb/10^3 gal	Table 1.3-8
N2O GWP	310	40 CFR 98, Table A- 1 of Subpart A
Pb	9 lb/Tbtu	Table 1.3-10

Notes:

[a] SO2 lbs/hr calculated using equation 142*% Sulfur in Fuel from Table 1.3-1.
[b] Total Organic Carbon emission factor from Table 1.3-3 used for VOCs.
[c] Diesel heaters are located in the paint booth and are used to dry painted equipment.

General lbs/hr columns are hidden to minimize the printable area.

Southern Field Welding
Paint Booth Heater Emissions for Paint Drying - HAPs and TAPs

Hours of Operation: 8760
Sulfur Weight %: 0 0015 Ultra Low Sulfur Diesel
Particulate Control from Paint Booth: 99 91% See Paint Booth Emissions Summary

Building Heaters
AP-42 Chapter 1.3 Fuel Oil Combustion

Heater #	Heat Rate (btu/r)	Heat Rate (mmbtu/hr)	Heat Rate (Tbtu/hr)	Diesel Usage (gal/hr)[a]	Diesel Usage (10^3 gal/hr)[a]
1	111,000	0.1110	1.11E-07	0.8500	0 00085
2	175 000	0.1750	1.75E-07	1.3000	0 00130
3	175,000	0 1750	1.75E-07	1.3000	0 00130
Total	461000	0 4610	4 61E-07	3 4500	0 0035

Speciated Organic Compounds from Diesel Combustion Emission Factors

CAS	Pollutant	Emission Factor		Source	Emissions (lbs/hr)	Emissions (tpy)	Listed in Table 585 or 586 of IDAPA	IDAPA Emission Level (lb/hr)	Source Meet Emission Level?
71-43-2	Benzene	2.14E-04	lb/10^3 gal	Table 1.3-9	7.4E-07	3.2E-06	586	8 00E-04	Yes
100-41-4	Ethylbenzene	6.36E-05	lb/10^3 gal	Table 1.3-9	2.2E-07	9.6E-07	585	29	Yes
50-00-0	Formaldehyde	3.30E-02	lb/10^3 gal	Table 1.3-9	1.1E-04	5 0E-04	586	5.10E-04	Yes
91-20-3	Naphthalene	1.13E-03	lb/10^3 gal	Table 1.3-9	3 9E-06	1.7E-05	585	3 33	Yes
71-55-6	1,1,1-Trichloroethane (aka Methyl Chloroform)	2.36E-04	lb/10^3 gal	Table 1.3-9	8 1E-07	3.6E-06	585	127	Yes
108-88-3	Toluene	8.26E-03	lb/10^3 gal	Table 1.3-9	2.1E-05	9 4E-05	585	25	Yes
1330-20-7	o-Xylene	1.09E-04	lb/10^3 gal	Table 1.3-9	3 8E-07	1.6E-06	585	29	Yes
83-32-9	*Acenaphthene*[b]	*2 11E-06*	*lb/10^3 gal*	*Table 1.3-9*	*7.3E-08*	*3 2E-07*	No		*NA*
208-96-8	Acenaphthylene	2.53E-07	lb/10^3 gal	Table 1.3-9	8 7E-10	3.8E-09	No	-	NA
120-12-7	*Anthracene*[b]	*1 22E-06*	*lb/10^3 gal*	*Table 1.3-9*	*4.20BE-09*	*1 84364E-08*	No		*NA*
56-55-3	Benz[a]anthracene[b]	4.01E-06	lb/10^3 gal	Table 1.3-9	1 4E-08	6.1E-08	586	9 10E-05	See POM/PAH Summary Below
205-99-2, 205-82-3	Benzo[b,k]fluoranthene[b]	1.48E-06	lb/10^3 gal	Table 1.3-9	5.1E-09	2.2E-08	586	9 10E-05	See POM/PAH Summary Below
191-24-2	*Benzo[g,h,i]perylene*[b]	*2.26E-06*	*lb/10^3 gal*	*Table 1.3-9*	*7.767E-09*	*3 41606E-08*	No		*NA*
218-01-9	Chrysene[b]	2.38E-06	lb/10^3 gal	Table 1.3-9	8.2E-09	3.6E-08	586	9 10E-05	See POM/PAH Summary Below
53-70-3	Dibenzo(a,h) anthracene[b]	1.67E-06	lb/10^3 gal	Table 1.3-9	5.8E-09	2.6E-08	586	9 10E-05	See POM/PAH Summary Below
206-44-0	*Fluoranthene*[b]	*4 84E-06*	*lb/10^3 gal*	*Table 1.3-9*	*1.0668E-08*	*7 31372E-08*	No		*NA*
86-73-7	*Fluorene*[b]	*4 47E-06*	*lb/10^3 gal*	*Table 1.3-9*	*1.5E-08*	*6 8E-08*	No		*NA*
193-39-5	Indo(1,2,3-cd)pyrene[b]	2.14E-06	lb/10^3 gal	Table 1.3-9	7.4E-09	3.2E-08	586	9.10E-05	See POM/PAH Summary Below
85-01-8	*Phenanthrene*[b]	*1.05E-05*	*lb/10^3 gal*	*Table 1.3-9*	*3 0225E-08*	*1.58006E-07*	No		*NA*
129-00-0	*Pyrene*[b]	*4 25E-06*	*lb/10^3 gal*	*Table 1.3-9*	*1.40625E-08*	*6 42218E-08*	No		*NA*
3268-87-9	OCDD[c]	3.10E-09	lb/10^3 gal	Table 1.3-9	1.0695E-11	4 68441E-11	586	1.50E-10	Yes

PAH or POM in listed in IDAPA	lbs/hr	Idaho PAH Standard (lb/hr)	Source Meets PAH Standard?
58.01.01.586.	4.0E-08	9.10E-05	Yes

Metals from Diesel Combustion Emission Factors

CAS	Pollutant	Emitted as Particulate or Gas	Emission Factor		Source	Emissions (lbs/hr)[d]	Emissions (tpy)	Listed in Table 585 or 586 of IDAPA	IDAPA Emission Level (lb/hr)[d]	Source Meet Emission Level?
7440-38-2	Arsenic (As)	Particulate[e]	4	lb/Tbtu	Table 1.3-10	1.8E-09	7.1E-09	586	1.50E-05	Yes
440-41-7	Beryllium (Be)	Particulate[e]	3	lb/Tbtu	Table 1.3-10	1.2E-09	5.3E-09	586	2.80E-05	Yes
7440-43-9	Cadmium (Cd)	Particulate[e]	3	lb/Tbtu	Table 1.3-10	1.2E-09	5.3E-09	586	3.70E-05	Yes
7440-47-3	Chromium (Cr)	Particulate[e]	3	lb/Tbtu	Table 1.3-10	1.2E-09	5.3E-09	585	0.033	Yes
7440-50-8	Copper (Cu)[f]	Particulate[f]	6	lb/Tbtu	Table 1.3-10	2 4E-09	1.1E-08	585	0.013	Yes
7439-92-1	Lead (Pb) - Accounted for with Criteria Pollutants	Particulate[e]	9	lb/Tbtu	Table 1.3-10	3.7E-09	1.6E-08	NA	NA	NA
7439-97-6	Mercury[g] (Hg)	Gas[e]	3	lb/Tbtu	Table 1.3-10	1.2E-02	5.3E-02	See note d	26	Yes
7439-96-5	Manganese (Mn)	Particulate[e]	6	lb/Tbtu	Table 1.3-10	2 4E-09	1 1E-08	585	6.70E-02	Yes
7440-02-0	Nickel (Ni)	Particulate[e]	3	lb/Tbtu	Table 1.3-10	1.2E-09	5.3E-09	586	2.70E-05	Yes
7782-49-2	Selenium (Se)	Particulate[h]	15	lb/Tbtu	Table 1.3-10	6 1E-09	2 67E-08	585	1.30E-02	Yes
7440-66-6	Zinc (Zn)	Particulate[e]	4	lb/Tbtu	Table 1.3-10	1.6E-09	7.1E-09	585	6.67E-01	Yes

Notes:

[a] Fuel use rates as provided by SFW.
[b] PAH/POM for comparison to emission threshold in IDAPA 58.01.01.586.
[c] Used emission level of 2,3,7,8 -TCDD for screening.
[d] Hg standard in lbs/year for compliance with IDAPA 58 01 01.215 standard of 25 lbs/year.
[e] Per Table 4-11 of Report on Revisions to 5th Edition AP-42 Section 1.3 Fuel Oil Combustion, page 4-44.
[f] Based on copper boiling point of 2835 K.
[g] Based on selenium boiling point of 958 K.
[h] POM per AP-42.

Southern Field Welding

Shop Heater Emissions - Criteria Pollutants

Hours of Operation (Max): 8760
Fuel Type: Natural Gas
Natural Gas Heating Value (btu/scf): 1050 AP-42 Appendix A

Building Heaters
AP-42 Chapter 1.4 Natural Gas Combustion

Heater Manufacturer	Heater Model	Number of Heaters in Shop	Heat Rate Per Heater (btu/hr)	Fuel Usage (10^6 scf/hr)	NOX (tpy)	SO2 (tpy)	CO (tpy)	VOC (tpy)	Pb (tpy)	PM (tpy)	PM10 (tpy)	PM2.5 (tpy)	GHGs CO2 (tpy)	GHGs CH4 (lb/hr)	GHGs CH4 (tpy)	GHGs N2O (tpy)
Advanced Distributor Products	SEP Series 175-A	2	172500	0.0003	0.14	0.00	0.06	0.01	7.20E-07	0.01	0.01	0.01	172.70	0.001	0.00	0.00
Modine	High Efficiency II PDP 150	3	150000	0.0004	0.18	0.00	0.08	0.01	9.36E-07	0.01	0.01	0.01	225.26	0.001	0.00	0.00
			Total:	0.0008	0.3117	0.0020	0.1327	0.0182	1.68E-06	0.0252	0.0252	0.0252	397.9543	0.002	0.0076	0.0073

	tpy	lb/hr
Total CO2e:	400.38	91.41

Pollutant	Criteria Pollutant Emission Factors Natural Gas	
NOx	94 lb/10^6 scf	Table 1.4-1
CO	40 lb/10^6 scf	Table 1.4-1
SO2[a]	0.6 lb/10^6 scf	Table 1.4-2
VOC	5.5 lb/10^6 scf	Table 1.4-2
PM (Total)	7.6 lb/10^6 scf	Table 1.4-2
PM10	7.6 lb/10^6 scf	Table 1.4-2
PM2.5	7.6 lb/10^6 scf	Table 1.4-2
CO2	120000 lb/10^6 scf	Table 1.4-2
CH4	2.3 lb/10^6 scf	Table 1.4-2
CH4 GWP	21	40 CFR 98, Table A- 1 of Subpart A
N2O	2.2 lb/10^6 scf	Table 1.4-2
N2O GWP	310	40 CFR 98, Table A- 1 of Subpart A
Pb	0.0005 lb/10^6 scf	Table 1.4-2

Notes
General lb/hr columns and other informational columns are hidden to minimize the printable area.

Southern Field Welding

Shop Heater Emissions - HAPs and TAPs

Hours of Operation (Max): 8760
Fuel Type: Natural Gas
Natural Gas Heating Value (btu/scf): 1050 AP-42 Appendix A

Building Heaters
AP-42 Chapter 1.4 Natural Gas Combustion

Heater Manufacturer	Heater Model	Number of Heaters in Shop	Heat Rate Per Heater (btu/hr)	Total Heat Rate (mmbtu/hr)	Fuel Usage (scf/hr)		Fuel Usage (10^6 scf/hr)	Fuel Usage (10^6 scf/year)
Advanced Distributor Products :	SEP Series 175-A	2	172500	0.3450	328.57		0.00033	2.88
Modine	High Efficiency II PDP 150	3	150000	0.4500	428.57		0.00043	3.75
			Total	0.7950	757.1429		0.00076	6.63

Speciated Organic Compounds from Natural Gas Combustion Emission Factors

CAS #:	Pollutant	Natural Gas		Emissions (lbs/hr)	Emissions (tpy)	POM/PAH?	Listed HAP in Section 112(b) of Clean Air Act per AP-42 1.4	Listed per IDAPA 58.01.01.585	IDAPA 58.01.01.585 Emission Level (lbs/hr)	Meets IDAPA 58.01.01.585 Emission Level?	Listed per IDAPA 58.01.01.5 86	IDAPA 58.01.01.5 86 Emission Level (lbs/hr)	Meets IDAPA 58.01.01.5856Emission Level?
91-57-6	*2-Methylnephthalene* [b]	*2.40E-05*	*lb/10^6 scf*	*1.8E-08*	*6.0E-08*	*AP-42*	*Yes*	*No*	-	*NA*	*No*	*NA*	*NA*
56-49-5	3-Methylchloranthrene	1.80E-06	lb/10^6 scf	1.4E-09	6.0E-09	AP-42	Yes	No	-	NA	Yes	2.50E-06	Yes
	7,12-Dimethylbenz(a)anthracene [b]	*1.60E-05*	*lb/10^6 scf*	*1.2E-08*	*5.3E-08*	AP-42	*Yes*	*No*	-	*NA*	*No*		*NA*
83-32-9	*Acenaphthene* [b]	*1.80E-06*	*lb/10^6 scf*	*1.4E-09*	*6.0E-09*	AP-42	*Yes*	*No*	-	*NA*	*No*		*NA*
120-12-7	*Anthracene* [b]	*2.40E-06*	*lb/10^6 scf*	*1.8E-09*	*8.0E-09*	*AP-42*	*Yes*	*No*	-	*NA*	*No*		*NA*
56-55-3	Benz(a)anthracene [c]	1.80E-06	lb/10^6 scf	1.4E-09	6.0E-09	AP-42 and Idaho Rules	Yes	No	-	NA	Yes - PAH	9.10E-05	See POM/PAH Summary Below
71-43-2	Benzene	2.10E-03	lb/10^6 scf	1.6E-06	7.0E-06	No	Yes	No	-	NA	Yes	8.00E-04	Yes
50-32-8	Benzo(a)pyrene [c]	1.20E-06	lb/10^6 scf	9.1E-10	4.0E-09	AP-42 and Idaho Rules	Yes	No	-	NA	Yes	2.00E-06	Yes
205-99-2	Benzo(b)fluoranthene [c]	1.80E-06	lb/10^6 scf	1.4E-09	6.0E-09	AP-42 and Idaho Rules	Yes	No	-	NA	Yes - PAH	9.10E-05	See POM/PAH Summary Below
191-24-2	*Benzo(g,h,i)perylene* [b]	*1.20E-06*	*lb/10^6 scf*	*9.1E-10*	*4.0E-09*	AP-42	*Yes*	*No*	-	*NA*	*No*		*NA*
205-82-3	Benzo(k)fluoranthene	1.80E-06	lb/10^6 scf	1.4E-09	6.0E-09	AP-42 and Idaho Rules	Yes	No	-	NA	Yes - PAH	9.10E-05	See POM/PAH Summary Below
106-97-8	Butane	2.10E+00	lb/10^6 scf	1.6E-03	7.0E-03	No	No	No	-	NA	No		NA
218-01-9	Chrysene [c]	1.80E-06	lb/10^6 scf	1.4E-09	6.0E-09	AP-42 and Idaho Rules	Yes	No	-	NA	Yes - PAH	9.10E-05	See POM/PAH Summary Below
53-70-3	Dibenzo(a,h)anthracene [c]	1.20E-06	lb/10^6 scf	9.1E-10	4.0E-09	AP-42 and Idaho Rules	Yes	No	-	NA	Yes - PAH	9.10E-05	See POM/PAH Summary Below
25321-22-6	Dichlorobenzene	1.20E-03	lb/10^6 scf	9.1E-07	4.0E-06	No	Yes	No	-	NA	No		NA
74-84-0	Ethane	3.10E+00	lb/10^6 scf	2.3E-03	1.0E-02	No	No	No	-	NA	No		NA
206-44-0	*Fluoranthene* [b]	*3.00E-06*	*lb/10^6 scf*	*2.3E-09*	*9.9E-09*	AP-42	*Yes*	*No*	-	*NA*	*No*		NA
86-73-7	*Fluorene* [b]	*2.80E-06*	*lb/10^6 scf*	*2.1E-09*	*9.3E-09*	AP-42	*Yes*	*No*	-	*NA*	*No*		NA
50-00-0	Formaldehyde	7.50E-02	lb/10^6 scf	5.7E-05	2.5E-04	No	Yes	No	-	NA	Yes	5.10E-04	Yes
110-54-3	Hexane	1.80E+00	lb/10^6 scf	1.4E-03	6.0E-03	No	Yes	Yes	12	Yes	No		NA
193-39-5	Indeno(1,2,3-cd)pyrene [c]	1.80E-06	lb/10^6 scf	1.4E-09	6.0E-09	AP-42 and Idaho Rules	Yes	No	-	NA	Yes - PAH	9.10E-05	See POM/PAH Summary Below
91-20-3	Naphthalene	6.10E-04	lb/10^6 scf	4.6E-07	2.0E-06	No	Yes	Yes	3.36	Yes	No		NA
109-66-0	Pentane	2.60E+00	lb/10^6 scf	2.0E-03	8.6E-03	No	No	Yes	118	Yes	No		NA
85-01-8	*Phenanathrene* [b]	*1.70E-05*	*lb/10^6 scf*	*1.3E-08*	*5.6E-08*	AP-42	*Yes*	*No*	-	*NA*	*No*		*NA*
74-98-6	Propane	1.6	lb/10^6 scf	1.2E-03	5.3E-03	No	No	No		NA	No		NA
129-00-0	*Pyrene* [b]	*5.00E-06*	*lb/10^6 scf*	*3.8E-09*	*1.7E-08*	*AP-42*	*Yes*	*No*	-	*NA*	*No*		NA
108-88-3	Toluene	3.40E-03	lb/10^6 scf	2.6E-06	1.1E-05	No	Yes	Yes	25	Yes	No		NA
				lbs/hr	Idaho PAH Standard (lb/hr)	Source Meets PAH Standard?							
			PAH or POM in listed in IDAPA 58.01.01.586.	5.6E-09	9.10E-05	Yes							

Southern Field Welding

Shop Heater Emissions - HAPs and TAPs

Metals from Natural Combustion Emission Factors

CAS #:	Pollutant	Natural Gas		Emissions (lbs/hr)	Emissions (lbs/year)	Emissions (tpy)	Listed HAP in Section 112(b) of Clean Air Act per AP-42 1.4	Listed per IDAPA 58.01.01.585	IDAPA 58.01.01.585 Emission Level (lbs/hr)	Meets IDAPA 58.01.01.585 Emission Level?	Listed per IDAPA 58.01.01.586	IDAPA 58.01.01.586 Emission Level (lbs/hr)	Meets IDAPA 58.01.01.586Emission Level?
7440-38-2	Arsenic	2.00E-04	lb/10^6 scf	1.5E-07	1.3E-03	6.5E-07	Yes	No	-	NA	Yes	1.50E-06	Yes
7440-39-3	Barium	4.40E-03	lb/10^6 scf	3.3E-06	2.9E-02	1.5E-05	No	Yes	0.033	Yes	No	-	NA
7440-41-7	Beryllium	1.20E-05	lb/10^6 scf	9.1E-09	8.0E-05	4.0E-08	Yes	No	-	NA	Yes	2.80E-05	Yes
7440-43-9	Cadmium	1.10E-03	lb/10^6 scf	8.3E-07	7.3E-03	3.6E-06	Yes	No	-	NA	Yes	3.70E-06	Yes
7440-47-3	Chromium	1.40E-03	lb/10^6 scf	0.0E+00	0.0E+00	0.0E+00	Yes	Yes	0.033	Yes	No	-	NA
7440-48-4	Cobalt	8.40E-05	lb/10^6 scf	6.4E-08	5.6E-04	2.8E-07	Yes	Yes	0.0033	Yes	No	-	NA
7440-50-8	Copper	8.50E-04	lb/10^6 scf	6.4E-07	5.6E-03	2.8E-06	No	Yes	0.013	Yes	No	-	NA
7439-96-5	Manganese	3.80E-04	lb/10^6 scf	2.9E-07	2.5E-03	1.3E-06	Yes	Yes	0.067	Yes	No	-	NA
7439-97-6	Mercury[a]	2.60E-04	lb/10^6 scf	2.0E-07	1.7E-03	8.6E-07	Yes	No	-	NA	Yes[1]	25	Yes
7439-98-7	Molybdenum	1.10E-03	lb/10^6 scf	8.3E-07	7.3E-03	3.6E-06	No	Yes	0.333	Yes	No	-	NA
7440-02-0	Nickel	2.10E-03	lb/10^6 scf	1.6E-06	1.4E-02	7.0E-06	Yes	No	-	NA	Yes	2.7E-05	Yes
7782-49-2	Selenium	2.40E-05	lb/10^6 scf	1.8E-08	1.6E-04	8.0E-08	Yes	Yes	0.013	Yes	No	-	NA
7440-62-2	Vanadium	2.30E-03	lb/10^6 scf	1.7E-06	1.5E-02	7.6E-06	No	Yes	0.003	Yes	No	-	NA
7440-66-6	Zinc	2.90E-02	lb/10^6 scf	2.2E-05	1.9E-01	9.6E-05	No	Yes	0.667	Yes			

Notes

[a] Hg standard in lbs/year for compliance with IDAPA 58.01.01.215 standard of 25 lbs/year

[b] POM per AP-42.

[c] PAH/POM for comparison to emission threshold in IDAPA 58.01.01.586.

Southern Field Welding
Abrasive Blasting Emissions

Maximum Annual Operating Hours for PTE: 8760 6,044,400

Blasting Material Used	Max Annual Usage (lbs)[c]	PM and PM10 Control Efficiency[b]	PM2.5 Control Efficiency[d]	Total PM (lb/hr)	Total PM (tpy)	Total PM10 (lb/hr)	Total PM10 (tpy)	Total PM2.5 (lb/hr)	Total PM2.5 (tpy)
SHARPSHOT 30X60 - BLACK SLAG	614,884.62	91.2%	35.8%	0.56	2.46	0.08	0.35	0.06	0.26

Pollutant	Emission Factors Sand Blasting of Mild Steel Panels	
Total PM[a]	91 lb/10^3 lb abrasive	Table 13.2.6-1
PM10	13 lb/10^3 lb abrasive	Table 13.2.6-1
PM2.5	1.3 lb/10^3 lb abrasive	Table 13.2.6-1

Notes:

[a] Used most conservative emission factor of 91 lbs/10^3 lbs abrasive from Table 13.2.6-1

[b] Abrasive blasting is fully enclosed - solid wood walls, with full blast enclosures; Exhaust Fan - 91.2% efficiency filtered, 48" suction port, reclamation system with deflection wall.

[c] See "Abrasive Blasting Detail" sheet.

[d] See "PM2.5 Interpolation Sheet."

Southern Field Welding

Abrasive Blasting Emissions

Date	Memo
Parts	
BLASTING MATERIAL-	
SS30/60 BB	
05/18/2011	SHARPSHOT 30X60 - BLACK SLAG (2 TON BAG)
06/07/2011	SHARPSHOT 30X60 - BLACK SLAG (2 TON BAG)
07/15/2011	SHARPSHOT 30X60 - BLACK SLAG (2 TON BAG)
08/15/2011	SHARPSHOT 30X60 - BLACK SLAG (2 TON BAG)
08/22/2011	SHARPSHOT 30X60 - BLACK SLAG (2 TON BAG)
08/29/2011	SHARPSHOT 30X60 - BLACK SLAG (2 TON BAG)
09/08/2011	SHARPSHOT 30X60 - BLACK SLAG (2 TON BAG)
09/08/2011	SHARPSHOT 30X60 - BLACK SLAG (2 TON BAG)
10/05/2011	SHARPSHOT 30X60 - BLACK SLAG (2 TON BAG)
10/09/2011	SHARPSHOT 30X60 - BLACK SLAG (2 TON BAG)

Actual Hours of Operation:	**2600**
Potential Hours of Operation:	**8760**
Calculated Scaling Factor:	**3.369**

Source Name	Qty
Alta Paints & Coatings	4,000
Alta Paints & Coatings	4,000
Alta Paints & Coatings	4,000
Alta Paints & Coatings	4,000
Alta Paints & Coatings	12,000
Alta Paints & Coatings	12,000
Alta Paints & Coatings	-
Alta Paints & Coatings	8,000
Alta Paints & Coatings	8,000
Alta Paints & Coatings	16,000
Total SS30/60 BB	72,000
Total BLASTING MATERIAL-	72,000
	72,000
	72000 lbs

First Order Date:	05/18/2011
Last Order Date:	10/09/2011
Total Days Between Orders:	144
Total Lbs of Material Used Over this Period:	72,000
Calculated Actual Use (lbs/day):	500
Calculated Maximum Use Using Scaling Factor (lbs/day):	1684.6
Annual Maximum Usage Using Scaling Factor (365 days/year):	614,885

Southern Field Welding

PM2.5 Control Efficiency Interpolation for Pre-Filter

Particle Size	Control Efficiency
5	74.1%
2.5	36% Interpolated using given control efficiencies.
0.5	5.1%

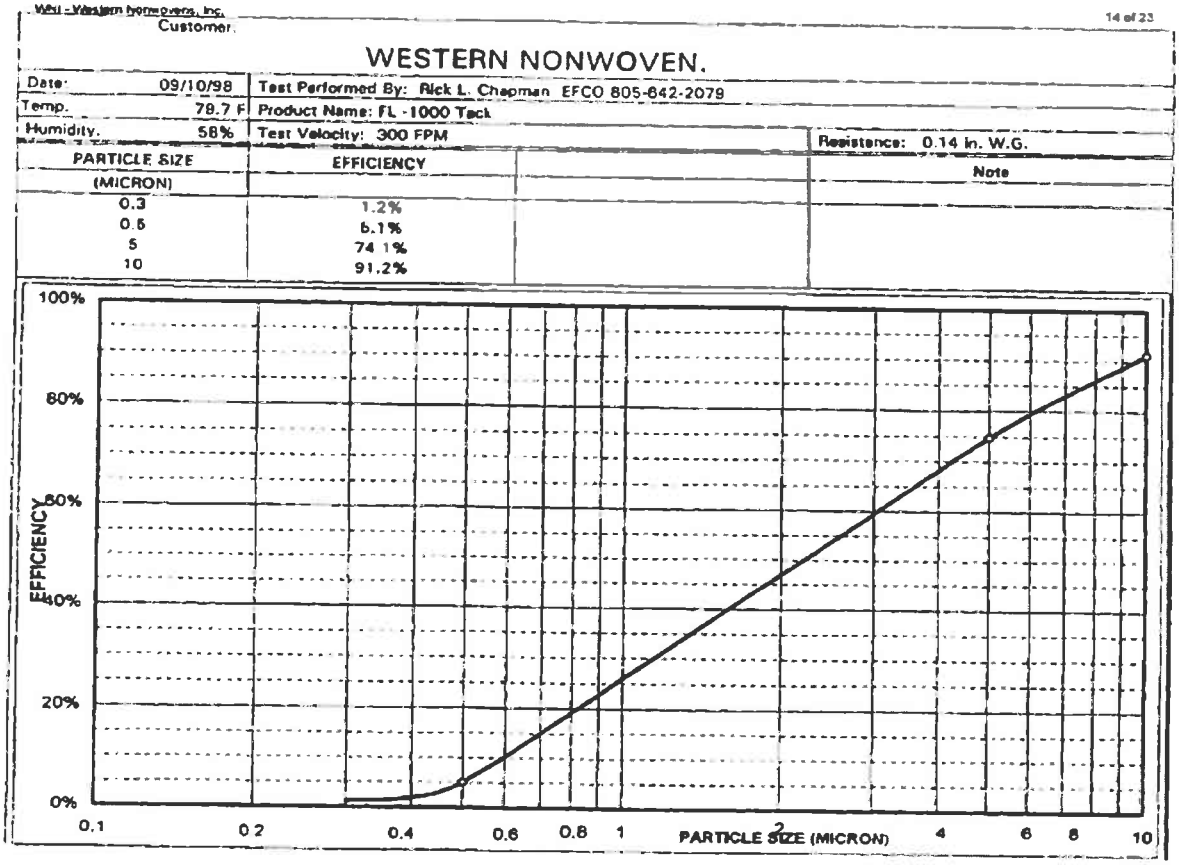

Customer: WESTERN NONWOVEN.

Date: 09/10/98	Test Performed By: Rick L. Chapman EFCO 805-642-2079		
Temp. 78.7 F	Product Name: FL -1000 Tack		
Humidity. 58%	Test Velocity: 300 FPM		Resistance: 0.14 in. W.G.

PARTICLE SIZE (MICRON)	EFFICIENCY		Note
0.3	1.2%		
0.5	5.1%		
5	74.1%		
10	91.2%		

Southern Field Welding
Review of HAPs List

CAS Number	Chemical Name
75070	Acetaldehyde
60355	Acetamide
75058	Acetonitrile
98862	Acetophenone
53963	2-Acetylaminofluorene
107028	Acrolein
79061	Acrylamide
79107	Acrylic acid
107131	Acrylonitrile
107051	Allyl chloride
92671	4-Aminobiphenyl
62533	Aniline
90040	o-Anisidine
1332214	Asbestos
71432	Benzene (including benzene from gasoline)
92875	Benzidine
98077	Benzotrichloride
100447	Benzyl chloride
92524	Biphenyl
117817	Bis(2-ethylhexyl)phthalate (DEHP)
542881	Bis(chloromethyl)ether
75252	Bromoform
106990	1,3-Butadiene
156627	Calcium cyanamide
105602	Caprolactam(See Modification)
133062	Captan
63252	Carbaryl
75150	Carbon disulfide
56235	Carbon tetrachloride
463581	Carbonyl sulfide
120809	Catechol
133904	Chloramben
57749	Chlordane
7782505	Chlorine
79118	Chloroacetic acid
532274	2-Chloroacetophenone
108907	Chlorobenzene
510156	Chlorobenzilate
67663	Chloroform
107302	Chloromethyl methyl ether
126998	Chloroprene
1319773	Cresols/Cresylic acid (isomers and mixture)

Southern Field Welding
Review of HAPs List

CAS Number	Chemical Name
95487	o-Cresol
108394	m-Cresol
106445	p-Cresol
98828	Cumene
94757	2,4-D, salts and esters
3547044	DDE
334883	Diazomethane
132649	Dibenzofurans
96128	1,2-Dibromo-3-chloropropane
84742	Dibutylphthalate
106467	1,4-Dichlorobenzene(p)
91941	3,3-Dichlorobenzidene
111444	Dichloroethyl ether (Bis(2-chloroethyl)ether)
542756	1,3-Dichloropropene
62737	Dichlorvos
111422	Diethanolamine
121697	N,N-Dimethylaniline
64675	Diethyl sulfate
119904	3,3-Dimethoxybenzidine
60117	Dimethyl aminoazobenzene
119937	3,3'-Dimethyl benzidine
79447	Dimethyl carbamoyl chloride
68122	Dimethyl formamide
57147	1,1-Dimethyl hydrazine
131113	Dimethyl phthalate
77781	Dimethyl sulfate
534521	4,6-Dinitro-o-cresol, and salts
51285	2,4-Dinitrophenol
121142	2,4-Dinitrotoluene
123911	1,4-Dioxane (1,4-Diethyleneoxide)
122667	1,2-Diphenylhydrazine
106898	Epichlorohydrin (l-Chloro-2,3-epoxypropane)
106887	1,2-Epoxybutane
140885	Ethyl acrylate
100414	Ethyl benzene
51796	Ethyl carbamate (Urethane)
75003	Ethyl chloride (Chloroethane)
106934	Ethylene dibromide (Dibromoethane)
107062	Ethylene dichloride (1,2-Dichloroethane)
107211	Ethylene glycol
151564	Ethylene imine (Aziridine)
75218	Ethylene oxide

Southern Field Welding
Review of HAPs List

CAS Number	Chemical Name
96457	Ethylene thiourea
75343	Ethylidene dichloride (1,1-Dichloroethane)
50000	Formaldehyde
76448	Heptachlor
118741	Hexachlorobenzene
87683	Hexachlorobutadiene
77474	Hexachlorocyclopentadiene
67721	Hexachloroethane
822060	Hexamethylene-1,6-diisocyanate
680319	Hexamethylphosphoramide
110543	Hexane
302012	Hydrazine
7647010	Hydrochloric acid
7664393	Hydrogen fluoride (Hydrofluoric acid)
7783064	Hydrogen sulfide(See Modification)
123319	Hydroquinone
78591	Isophorone
58899	Lindane (all isomers)
108316	Maleic anhydride
67561	Methanol
72435	Methoxychlor
74839	Methyl bromide (Bromomethane)
74873	Methyl chloride (Chloromethane)
71556	Methyl chloroform (1,1,1-Trichloroethane)
78933	Methyl ethyl ketone (2-Butanone)(See Modification)
60344	Methyl hydrazine
74884	Methyl iodide (Iodomethane)
108101	Methyl isobutyl ketone (Hexone)
624839	Methyl isocyanate
80626	Methyl methacrylate
1634044	Methyl tert butyl ether
101144	4,4-Methylene bis(2-chloroaniline)
75092	Methylene chloride (Dichloromethane)
101688	Methylene diphenyl diisocyanate (MDI)
101779	4,4'-Methylenedianiline
91203	Naphthalene
98953	Nitrobenzene
92933	4-Nitrobiphenyl
100027	4-Nitrophenol
79469	2-Nitropropane
684935	N-Nitroso-N-methylurea
62759	N-Nitrosodimethylamine

Southern Field Welding
Review of HAPs List

CAS Number	Chemical Name
59892	N-Nitrosomorpholine
56382	Parathion
82688	Pentachloronitrobenzene (Quintobenzene)
87865	Pentachlorophenol
108952	Phenol
106503	p-Phenylenediamine
75445	Phosgene
7803512	Phosphine
7723140	Phosphorus
85449	Phthalic anhydride
1336363	Polychlorinated biphenyls (Aroclors)
1120714	1,3-Propane sultone
57578	beta-Propiolactone
123386	Propionaldehyde
114261	Propoxur (Baygon)
78875	Propylene dichloride (1,2-Dichloropropane)
75569	Propylene oxide
75558	1,2-Propylenimine (2-Methyl aziridine)
91225	Quinoline
106514	Quinone
100425	Styrene
96093	Styrene oxide
1746016	2,3,7,8-Tetrachlorodibenzo-p-dioxin
79345	1,1,2,2-Tetrachloroethane
127184	Tetrachloroethylene (Perchloroethylene)
7550450	Titanium tetrachloride
108883	Toluene
95807	2,4-Toluene diamine
584849	2,4-Toluene diisocyanate
95534	o-Toluidine
8001352	Toxaphene (chlorinated camphene)
120821	1,2,4-Trichlorobenzene
79005	1,1,2-Trichloroethane
79016	Trichloroethylene
95954	2,4,5-Trichlorophenol
88062	2,4,6-Trichlorophenol
121448	Triethylamine
1582098	Trifluralin
540841	2,2,4-Trimethylpentane
108054	Vinyl acetate
593602	Vinyl bromide
75014	Vinyl chloride

Southern Field Welding
Review of HAPs List

CAS Number	Chemical Name
75354	Vinylidene chloride (1,1-Dichloroethylene)
1330207	Xylenes (isomers and mixture)
95476	o-Xylenes
108383	m-Xylenes
106423	p-Xylenes
0	Antimony Compounds
0	Arsenic Compounds (inorganic including arsine)
0	Beryllium Compounds
0	Cadmium Compounds
0	Chromium Compounds
0	Cobalt Compounds
0	Coke Oven Emissions
0	Cyanide Compounds1
0	Glycol ethers2
0	Lead Compounds
0	Manganese Compounds
0	Mercury Compounds
0	Fine mineral fibers3
0	Nickel Compounds
0	Polycylic Organic Matter4
0	Radionuclides (including radon)5
0	Selenium Compounds

Southern Field Welding
Review of GHGs and Global Warming Potentials

CAS	Name	Chemical Formula	GWP
124-38-9	Carbon Dioxide	CO2	1
74-82-8	Methane	CH4	21
10024-97-2	Nitrous oxide	N2O	310
75-46-7	HFC-23	CHF3	11,700
75-10-5	HFC-32	CH2F2	650
593-53-3	HFC-41	CH3F	150
354-33-6	HFC-125	C2HF5	2,800
359-35-3	HFC-134	C2H2F4	1,000
811-97-2	HFC-134a	CH2FCF3	1,300
430-66-0	HFC-143	C2H3F3	300
420-46-2	HFC-143a	C2H3F3	3,800
624-72-6	HFC-152	CH2FCH2F	53
75-37-6	HFC-152a	CH3CHF2	140
353-36-6	HFC-161	CH3CH2F	12
431-89-0	HFC-227ea	C3HF7	2,900
677-56-5	HFC-236cb	CH2FCF2CF3	1,340
431-63-0	HFC-236ea	CHF2CHFCF3	1,370
690-39-1	HFC-236fa	C3H2F6	6,300
679-86-7	HFC-245ca	C3H3F5	560
460-73-1	HFC-245fa	CHF2CH2CF3	1,030
406-58-6	HFC-365mfc	CH3CF2CH2CF3	794
138495-42-8	HFC-43-10mee	CF3CFHCFHCF2CF3	1,300
2551-62-4	Sulfur hexafluoride	SF6	23,900
373-80-8	Trifluoromethyl sulphur pentafluoride	SF5CF3	17,700
7783-54-2	Nitrogen trifluoride	NF3	17,200
75-73-0	PFC-14 (Perfluoromethane)	CF4	6,500
76-16-4	PFC-116 (Perfluoroethane)	C2F6	9,200
76-19-7	PFC-218 (Perfluoropropane)	C3F8	7,000
931-91-9	Perfluorocyclopropane	c-C3F6	17,340
355-25-9	PFC-3-1-10 (Perfluorobutane)	C4F10	7,000
115-25-3	Perfluorocyclobutane	c-C4F8	8,700
678-26-2	PFC-4-1-12 (Perfluoropentane)	C5F12	7,500
355-42-0	PFC-5-1-14 (Perfluorohexane)	C6F14	7,400
306-94-5	PFC-9-1-18	C10F18	7,500
26675-46-7	HCFE-235da2 (Isoflurane)	CHF2OCHClCF3	350
E1730133	HFE-43-10pccc (H-Galden 1040x)	CHF2OCF2OC2F4OCHF2	1,870

Southern Field Welding
Review of GHGs and Global Warming Potentials

CAS	Name	Chemical Formula	GWP
3822-68-2	HFE-125	CHF2OCF3	14,900
1691-17-4	HFE-134	CHF2OCHF2	6,320
421-14-7	HFE-143a	CH3OCF3	756
2356-62-9	HFE-227ea	CF3CHFOCF3	1,540
78522-47-1	HFE-236ca12 (HG-10)	CHF2OCF2OCHF2	2,800
57041-67-5	HFE-236ea2 (Desflurane)	CHF2OCHFCF3	989
20193-67-3	HFE-236fa	CF3CH2OCF3	487
22410-44-2	HFE-245cb2	CH3OCF2CF3	708
84011-15-4	HFE-245fa1	CHF2CH2OCF3	286
1885-48-9	HFE-245fa2	CHF2OCH2CF3	659
425-88-7	HFE-254cb2	CH3OCF2CHF2	359
460-43-5	HFE-263fb2	CF3CH2OCH3	11
67490-36-2	HFE-329mcc2	CF3CF2OCF2CHF2	919
156053-88-2	HFE-338mcf2	CF3CF2OCH2CF3	552
188690-78-0	HFE-338pcc13 (HG-01)	CHF2OCF2CF2OCHF2	1,500
28523-86-6	HFE-347mcc3	CH3OCF2CF2CF3	575
E1730135	HFE-347mcf2	CF3CF2OCH2CHF2	374
406-78-0	HFE-347pcf2	CHF2CF2OCH2CF3	580
382-34-3	HFE-356mec3	CH3OCF2CHFCF3	101
160620-20-2	HFE-356pcc3	CH3OCF2CF2CHF2	110
E1730137	HFE-356pcf2	CHF2CH2OCF2CHF2	265
35042-99-0	HFE-356pcf3	CHF2OCH2CF2CHF2	502
378-16-5	HFE-365mcf3	CF3CF2CH2OCH3	11
512-51-6	HFE-374pc2	CH3CH2OCF2CHF2	557
163702-07-6	HFE-449sl (HFE-7100) Chemical blend	C4F9OCH3 (CF3)2CFCF2OCH3	297
163702-08-7	HFE-449sl (HFE-7100) Chemical blend	C4F9OCH3 (CF3)2CFCF2OCH3	297
163702-05-4	HFE-569sf2 (HFE-7200) Chemical blend	C4F9OC2H5 (CF3)2CFCF2OC2H5	59
163702-06-5	HFE-569sf2 (HFE-7200) Chemical blend	C4F9OC2H5 (CF3)2CFCF2OC2H5	59
28523-86-6	Sevoflurane	CH2FOCH(CF3)2	345
13171-18-1	HFE-356mm1	(CF3)2CHOCH3	27
26103-08-2	HFE-338mmz1	CHF2OCH(CF3)2	380
NA	(Octafluorotetramethy-lene)hydroxymethyl	X-(CF2)4CH(OH)-X	73
22052-84-2	HFE-347mmy1	CH3OCF(CF3)2	343
920-66-1	Bis(trifluoromethyl)-methanol	(CF3)2CHOH	195
422-05-9	2,2,3,3,3-pentafluoropropanol	CF3CF2CH2OH	42
NA	PFPMIE	CF3OCF(CF3)CF2OCF2OCF3	10300

Note:
SFW does not emit any of the listed GHGs other than CO2, CH4, and N2O.

APPENDIX C: SFW PLOT PLAN

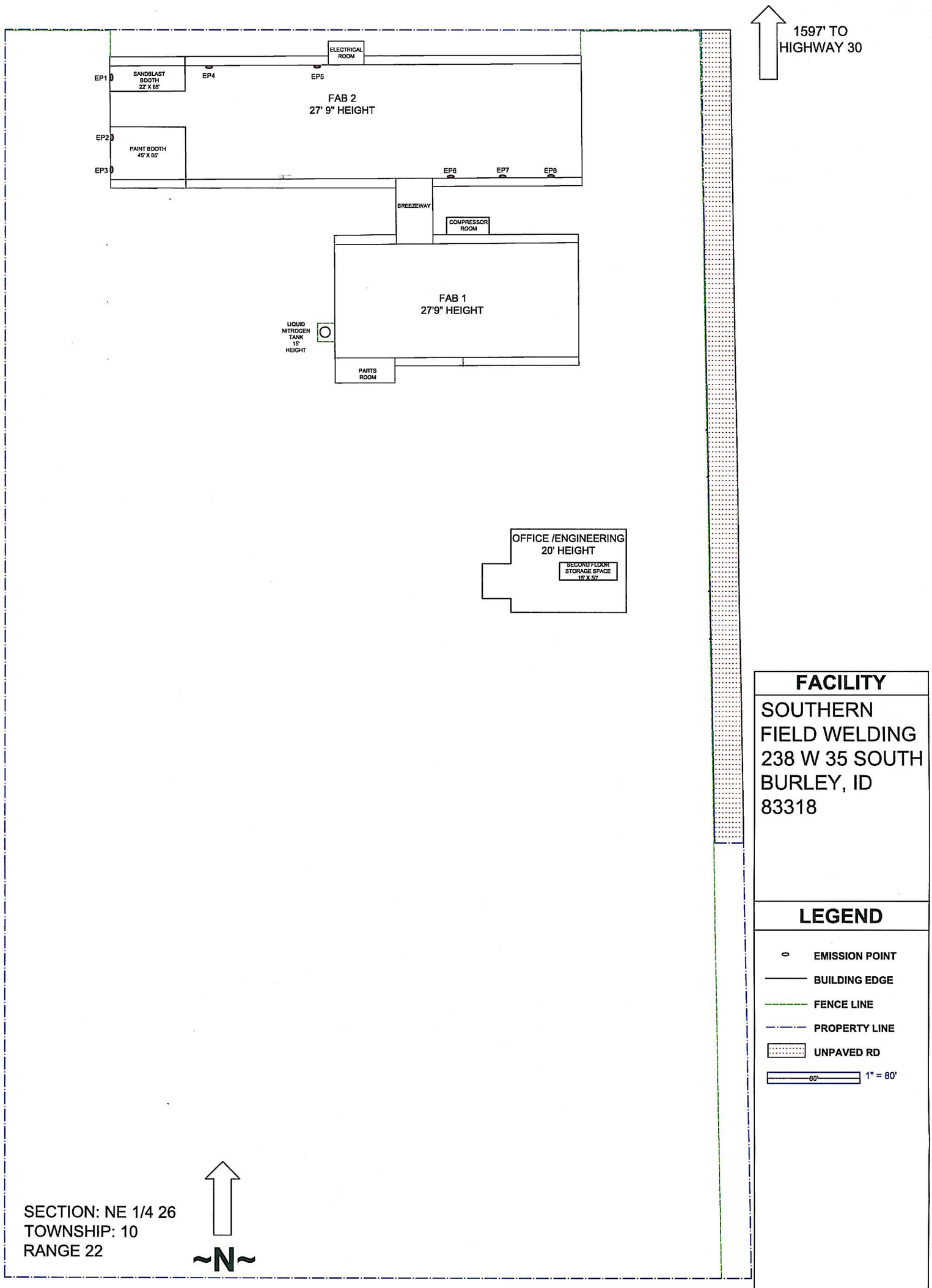
1597' TO
HIGHWAY 30
ELECTRICAL
ROOM
EP1
SANDBLAST
BOOTH
22' X 65'
EP4
EP5
FAB 2
27' 9" HEIGHT
EP2
PAINT BOOTH
45' X 65'
EP3
EP6
EP7
EP8
BREEZEWAY
COMPRESSOR
ROOM
FAB 1
27'9" HEIGHT
LIQUID
NITROGEN
TANK
15'
HEIGHT
PARTS
ROOM
OFFICE /ENGINEERING
20' HEIGHT
SECOND FLOOR
STORAGE SPACE
15' X 50'
FACILITY
SOUTHERN
FIELD WELDING
238 W 35 SOUTH
BURLEY, ID
83318
LEGEND
EMISSION POINT
BUILDING EDGE
FENCE LINE
PROPERTY LINE
UNPAVED RD
80'
1" = 80'
SECTION: NE 1/4 26
TOWNSHIP: 10
RANGE 22
~N~

APPENDIX D: REGULATORY APPLICABILITY ANALYSIS

SUMMARY OF IDAHO AND FEDERAL AIR QUALITY RULES APPLICABILITY TO SOUTHERN FIELD WELDING

Summary of Applicable and Non-Applicable Idaho Air Quality Rules and Federal Rules to Southern Field Welding

Attainment Designation (40 CFR 81.313)

- Southern Field Welding (SFW) is located in Cassia County, which is designated as attainment or unclassifiable for PM2.5, PMI0, SO2, NOx CO, and Ozone for federal and state criteria air pollutants.

Excess Emission (IDAPA 58.01.01.130 -136)

- SFW is subject to the procedures and requirements of IDAPA 58.01.01.130-136 for excess emissions due to startup, shutdown, scheduled maintenance, safety measures, upsets and breakdowns.

Certification (IDAPA 58.01.01.123)

- SFW understands that all documents submitted to DEQ, including, but not limited to, records, monitoring data, supporting information, requests for confidential treatment, testing reports, or compliance certification shall contain a certification by a responsible official. The certification shall state that, based on information and belief formed after reasonable inquiry, the statements and information in the document(s) are true, accurate, and complete.

False Statements ([IDAPA 58.01.01.125)

- SFW understands that no person shall knowingly make any false statement, representation, or certification in any form, notice, or report required under a permit, or any applicable rule or order in force pursuant thereto.

Tampering (IDAPA 58.01.01.126)

- SFW understands that No person shall knowingly render inaccurate any monitoring device or method required under a permit or any applicable rule or order in force pursuant thereto.

Performance Testing (IDAPA 58.01.01.157)

- SFW understands that any performance testing required by the permit is required to be conducted in accordance with the procedures of IDAPA 58.01.01.157.

Transferability (IDAPA 58.01.01.209.06)

- SFW understands that a permit is transferable in accordance with procedures listed in IDAPA 58.01.01.209.06.

Permit to Construct (IDAPA 58.01.01.200 - 228)

- Southern Field Welding does not meet the permit to construct exemption criteria contained in Sections 220 through 223 of the Rules. Therefore, a PTC is required.
- IDAPA 58.01.01.202
    - SFW is submitting an application which satisfies the applicable permit to construct application procedures.
    - Estimates of Ambient Concentrations
        - SFW emission inventory indicates that emissions are below the Level I Thresholds in the State of Idaho Guideline for Performing Air Quality Impact Analysis all pollutants other than PM2.5. The estimated PM2.5 emissions are below the Level II thresholds. Due to PM2.5 emissions being approximately 1/4th of the Level II threshold (see emission inventory), emissions being below the level regulatory concern (1 tpy per modeling guideline), and the emissions coming from 8 emission points (see attached plot plan), SFW believes that the PM2.5 emissions do not pose a threat to the ambient air quality standards. Based on this determination, an air quality modeling analysis is not included with this application.
        - Controlled emissions of Toxic Air Pollutants (TAPs) and Hazardous Air Pollutants (HAPs) are below the emission levels listed in Idaho Air Rules Sections 585 and 586. Therefore, compliance with the TAPs has been demonstrated via Idaho Air Rules Section 210.08 and the State of Idaho Guideline for Performing Air Quality Impact Analysis.

- IDAPA 58.01.01.203
    - SFW is subject to the permit requirements for new and stationary sources.

- IDAPA 58.01.01.204
    - SFW is not a new major facility subject to PSD located in a non-attainment area. Therefore, these requirements do not apply.

- IDAPA 58.01.01.205
    - SFW is not a major facility subject to PSD. Therefore, these requirements do not apply.

- IDAPA 58.01.01.206 - 208
    - SFW is not proposing any optional offsets for a permit to construct. Therefore, these requirements do not apply.

- IDAPA 58.01.01.209
    - SFW is subject to the Procedure for Issuing Permits.

- IDAPA 58.01.01.210
    - SFW is subject to the Demonstration of Preconstruction Compliance with Toxic Standards. The application and emission inventory demonstrates that SFW is below the emission levels for toxic air pollutants listed in Idaho Air Rules Sections 585 and 586.

- IDAPA 58.01.01.211
    - SFW would be subject to the Conditions for Permit to construct as determined by the Idaho DEQ as part of the permitting process.

- IDAPA 58.01.01.212

- SFW would be subject to the Obligation to Comply requirements. SFW understands that receiving a permit to construct shall not relieve SFW of the responsibility to comply with all applicable local, state and federal statutes, rules and regulations.

- IDAPA 58.01.01.213 -214
  - SFW is not requesting a pre-permit to construct, under these requirements. Therefore, these requirements do not apply.

- IDAPA 58.01.01.215
  - SFW is subject to the mercury emission standard. The application and emission inventory demonstrates that SFW emits less than 25 lbs/year.

- IDAPA 58.01.01.216 – 219
  - Reserved.

- IDAPA 58.01.01.220 – 223
  - SFW does not qualify for the exemption criteria listed in these sections (see emission inventory).

- IDAPA 58.01.01.224 and 226.
  - SFW is subject to the permit to construct application fee requirements. An application fee of $1000 is included with this application.

- IDAPA 58.01.01.225
  - SFW is subject to the permit to construct processing fee. SFW understands that this processing fee is based on the emissions from the facility.

- IDAPA 58.01.01.227
  - SFW understands that the permit to construct application and processing fees shall be deposited by the Department into a stationary source permit account. Monies from this account shall be used solely toward technical, legal and administrative support of the Department's permit to Construct and Tier II permit programs and shall not be used for those activities supported by the fund created for implementing the operating permit program required under Title V of the federal Clean Air Act amendments of 1990.

- IDAPA 58.01.01.228
  - SFW understands that it may be able to file an appeal within thirty-five (35) days of the date the SFW receives an assessment from the Department under Section 225, in accordance with IDAPA 58.01.23, "Rules of Administrative Procedure Before the Board of Environmental Quality."

Title V Classification, Tier I, and Tier II Operating Permits (IDAPA 58.01.01.300 - 499, 40 CFR Part 70)

- SFW is below the Title V emission thresholds and is not seeking a Tier II Operating Permit. Therefore, these requirements do not apply.

Opacity (IDAPA 58.01.01.625)

- The opacity limits contained in IDAPA 58.01.01.625 would apply to the abrasive blasting stacks, paint booth stacks, or any other stack, vent, or functionally equivalent opening at SFW. Opacity would be determined using the procedures of IDAPA 58.01.01.625.

Odors (IDAPA 58.01.01.776.01)

- No person shall allow, suffer, cause, or permit the emission of odorous gases, liquids, or solids into the atmosphere in such quantities as to cause air pollution in accordance with IDAPA 58.01.01.776.01.

Incorporation of Federal Requirements by Reference (IDAPA 58.01.01.107)

- SFW understands that, unless expressly provided otherwise, any reference in the permit to any document identified in IDAPA 58.01.01.107.03 would constitute the full incorporation into the permit of that document for the purposes of the reference, including any notes and appendices therein.

General Compliance (Idaho Code §39-101, et. seq.)

- SFW would have a duty to comply with all terms and conditions of an air quality permit.

PSD Classification (40 CFR 52.21)

- SFW is not a major stationary source as defined in 40 CFR 52.21 (b)(1), nor is it undergoing any physical change at a stationary source, not otherwise qualifying under paragraph 40 CFR 52.21 (b)(1) as a major stationary source, that would constitute a major stationary source by itself as defined in 40 CFR 52. Therefore, in accordance with 40 CFR 52.21(a)(2), the PSD requirements do not apply.

NSPS Applicability (40 CFR 60)

- The facility is not subject to any NSPS requirements.

NESHAP Applicability (40 CFR 61)

- The facility is not subject to any NESHAP requirements pursuant to 40 CFR 61.

MACT Applicability (40 CFR 63)

- The facility is not subject to 40 CFR 63 Subpart MMMM. See attached determination information for 40 CFR Part 63 Subpart MMMM.
- The facility is not subject to 40 CFR 63 Subpart HHHHHH. See attached determination information for 40 CFR Part 63 Subpart HHHHHH.
- The facility is subject to 40 CFR 63 Subpart XXXXXX. See attached determination information for 40 CFR Part 63 Subpart XXXXXX.

CAM Applicability (40 CFR 64)

- 40 CFR 64 does not apply to this facility because it is not required to obtain a part 70 or 71 permit.

IDAHO AIR QUALITY RULES DETAILED ANALYSIS

APPLICABLE REQUIREMENTS –Idaho Regulations

Idaho Administrative Rules

58.01.01 - Rules for the Control of Air Pollution in Idaho

Applicable	Citation	Description	Comment
No	58.01.01.000	Legal Authority	This section is administrative in content and contains no specific requirements for this facility.
No	58.01. 01.001	Title And Scope	This section is administrative in content and contains no specific requirements for this facility
Yes	58.01.01.002	Written Interpretations	This section is administrative in content and contains no specific requirements for this facility; however, the written interpretations may cover sections of the IDAPA that apply to this facility.
No	58.01.01.003	Administrative Appeals	This application is not for the purpose of an appeal; therefore, this regulation does not apply at this time.
Yes	58.01.01.004	Catchlines	This section is administrative in content, and is applicable to this facility when interpreting the IDAPA.
No	58.01.01.005 -- 011	Definitions, General Definitions, Definitions for the Purposes of Sections 200 through 228 and 400 through 461, Definitions for the Purposes of Sections 300 through 386, Definitions for the Purposes of 40 CFR Part 60, Definitions for the Purposes of 40 CFR Part 61 and 40 CFR Part 63, Definitions for the Purposes of Sections 790 through 799.	These regulations do not contain any requirements; they are definition sections.
No	58.01.01.012 -- 105	(RESERVED)	
No	58.01.01.106	Abbreviations	This regulation does not contain any requirements; it is a definition section.
Yes	58.01.01.107	Incorporations by Reference	The incorporated references are applicable to this facility and are specifically identified in the federal regulation review.
No	58.01.01.108 -- 120	(RESERVED)	
No	58.01.01.121	Compliance Requirements by Department	Currently there are no projects or circumstances existing at the facility that would subject SFW to these provisions. However, SFW recognizes the potential enforcement of these provisions if future circumstances arise.

APPLICABLE REQUIREMENTS –Idaho Regulations

Applicable	Citation	Description	Comment
Yes	58.01.01.122	Information Orders by the Department	This regulation is applicable to this facility.
Yes	58.01.01.123	Certification of Documents	This regulation is applicable to this facility.
Yes	58.01.01.124	Truth, Accuracy and Completeness of Documents	This regulation is applicable to this facility.
Yes	58.01.01.125	False Statements	This regulation is applicable to this facility.
Yes	58.01.01.126	Tampering	This regulation is applicable to this facility.
Yes	58.01.01.127	Format of Responses	This regulation is applicable to this facility.
No	58.01.01.128	Confidential Information	This regulation would be applicable to this facility should any confidential information be submitted. Currently there are no projects or circumstances existing at the facility that would subject SFW to these provisions. However, SFW reserves the right to use these provisions if future circumstances arise.
No	58.01.01.129	(Reserved)	
Yes	58.01.01.130	Startup, Shutdown, Scheduled Maintenance, Safety Measures, Upset and Breakdown	This regulation is applicable to this facility.
Yes	58.01.01.131	Excess Emissions	This regulation is applicable to this facility.
Yes	58.01.01.132	Correction of Condition	This regulation is applicable to this facility.
Yes	58.01.01.133	Startup, Shutdown and Scheduled Maintenance Requirements	This regulation is applicable to this facility.
Yes	58.01.01.134	Upset, Breakdown and Safety Requirements	This regulation is applicable to this facility.
Yes	58.01.01.135	Excess Emissions Reports	This regulation is applicable to this facility.
Yes	58.01.01.136	Excess Emissions Records	This regulation is applicable to this facility.
No	58.01.01.137 -- 139	(Reserved)	
No	58.01.01.140	Variances	Currently there are no projects or circumstances existing at the facility that would subject SFW to these provisions. However, SFW reserves the right to use these provisions if future circumstances arise.

APPLICABLE REQUIREMENTS –Idaho Regulations

Applicable	Citation	Description	Comment
No	58.01.01.141	Petition	Currently there are no projects or circumstances existing at the facility that would subject SFW to these provisions. However, SFW reserves the right to use these provisions if future circumstances arise.
No	58.01.01.142	Notice	These regulations specify various requirements for the Department.
No	58.01.01.143	Investigation and Recommendation	These regulations specify various requirements for the Department.
No	58.01.01.144	Objections to Petition	These regulations govern citizen suit actions.
No	58.01.01.145	Authorization of Hearing	These regulations specify various requirements for the Department.
No	58.01.01.146	Notice of Hearing	These regulations specify various requirements for the Department.
No	58.01.01.147	Decision	These regulations specify various requirements for the Department.
No	58.01.01.148	Proof of Hardship	Currently there are no projects or circumstances existing at the facility that would subject SFW to these provisions. However, SFW reserves the right to use these provisions if future circumstances arise.
No	58.01.01.149	Variance from New Rule	Currently there are no projects or circumstances existing at the facility that would subject SFW to these provisions. However, SFW reserves the right to use these provisions if future circumstances arise.
No	58.01.01.150 -- 154	(Reserved)	
Yes	58.01.01.155	Circumvention	This regulation is applicable to this facility.
Yes	58.01.01.156	Total Compliance	This regulation is applicable to this facility.
Yes	58.01.01.157	Test Methods and Procedures	Should SFW be required to conduct emission testing, this regulation would be applicable to this facility.
No	58.01.01.158 -- 159	(Reserved)	

APPLICABLE REQUIREMENTS –Idaho Regulations

Applicable	Citation	Description	Comment
No	58.01.01.160	Provisions Governing Specific Activities and Conditions	This is an introductory section and contains no requirements.
Yes	58.01.01.161	Toxic Substances	This regulation is applicable to this facility.
No	58.01.01.162	Modifying Physical Conditions	These regulations specify various requirements for the Department.
No	58.01.01.163	Source Density	These regulations specify various requirements for the Department.
Yes	58.01.01.164	Polychlorinated Biphenyls (PCBs)	Currently there are no projects or circumstances existing at the facility that would subject SFW to these provisions. However, SFW recognizes the potential enforcement of these provisions if future circumstances arise.
No	58.01.01.165-- 174	(Reserved)	
No	58.01.01.175	Procedures and Requirements for Permits Establishing a Facility Emissions Cap	This is an introductory section and contains no requirements.
No	58.01.01.176	Facility Emissions Cap	This facility is not seeking a facility emissions cap; therefore, this regulation does not apply. However, SFW reserves the right to use these provisions if future circumstances arise.
No	58.01.01.177 -- 181	Application Procedures, Standard Contents of Permits Establishing a Facility Emissions Cap, Procedures for Issuing Permits Establishing a Facility Emissions Cap, Revisions to Permits Establishing a Facility Emissions Cap, Notice and Record-Keeping of Estimates of Ambient Concentrations	This facility is not seeking a facility emissions cap; therefore, this regulation does not apply. However, SFW reserves the right to use these provisions if future circumstances arise.
No	58.01.01.182 -- 199	(Reserved)	
Yes	58.01.01.200	Procedures and Requirements for Permits to Construct	This regulation is applicable to this facility.
Yes	58.01.01.201	Permit to Construct Required	This regulation is applicable to this facility.

APPLICABLE REQUIREMENTS –Idaho Regulations

Applicable	Citation	Description	Comment
Yes	58.01.01.202	Application Procedures	This regulation is applicable to this facility. The SFW emission inventory indicates that emissions are below the Level I Thresholds in the State of Idaho Guideline for Performing Air Quality Impact Analysis for all pollutants other than PM2.5. The estimated PM2.5 emissions are below the Level II thresholds. Due to PM2.5 emissions being approximately 1/4th of the Level II threshold (see emission inventory), below the level of regulatory concern (1 tpy per modeling guideline) and the emissions being aggregated over several emission points (see attached plot plan), SFW believes that the PM2.5 emissions do not pose a threat to the ambient air quality standards. Based on this determination, an air quality modeling analysis is not included with this application.
Yes	58.01.01.203	Permit Requirements for New and Modified Stationary Sources	This regulation is applicable to this facility.
No	58.01.01.204	Permit Requirements for New Major Facilities or Major Modifications in Nonattainment Areas	This facility is not a proposed major stationary source or major modification to a source located within a non-attainment area. The provisions of these regulations are not applicable at this time.
No	58.01.01.205	Permit Requirements for New Major Facilities or Major Modifications in Attainment or Unclassifiable Areas	This facility is not a proposed major stationary source or major modification to a source. The provisions of these regulations are not applicable at this time.
No	58.01.01.206	Optional Offsets for Permits to Construct	SFW is not proposing any optional offsets for a permit to construct. Therefore, these requirements do not apply.
No	58.01.01.207	Requirements for Emission Reduction Credit	SFW is not proposing any optional offsets for a permit to construct. Therefore, these requirements do not apply.
No	58.01.01.208	Demonstration of Net Air Quality Benefit	SFW is not proposing any optional offsets for a permit to construct. Therefore, these requirements do not apply.
Yes	58.01.01.209	Procedure for Issuing Permits	This regulation is applicable to this facility.
Yes	58.01.01.210	Demonstration of Preconstruction Compliance With Toxic Standards	SFW is subject to the Demonstration of Preconstruction Compliance with Toxic Standards. The application and emission inventory demonstrates that SFW is below the emission levels for toxic air pollutants listed in Idaho Air Rules Sections 585 and 586.

APPLICABLE REQUIREMENTS –Idaho Regulations

Applicable	Citation	Description	Comment
Yes	58.01.01.211	Conditions for Permits to Construct	This regulation is applicable to this facility.
Yes	58.01.01.212	Obligation to Comply	This regulation is applicable to this facility.
No	58.01.01.213	Pre-Permit Construction	SFW is not requesting a pre-permit to construct, under these requirements. Therefore, these requirements do not apply.
No	58.01.01.214	Demonstration of Preconstruction Compliance for New and Reconstructed Major Sources of Hazardous Air Pollutants	SFW is not requesting a pre-permit to construct, under these requirements. Therefore, these requirements do not apply.
Yes	58.01.01.215	Mercury Emission Standard for New or Modified Sources	SFW is subject to the mercury emission standard. The application and emission inventory demonstrates that SFW emits less than 25 lbs/year.
No	58.01.01.216-219	Reserved	
No	58.01.01.220 - 223	General Exemption Criteria For Permit To Construct Exemptions, Category I Exemption, Category II Exemption, Exemption Criteria and Reporting Requirements For Toxic Air Pollutant Emissions	SFW does not qualify for the exemption criteria listed in these sections (see emission inventory).
Yes	58.01.01.224	Permit to Construct Application Fee	This regulation is applicable to this facility.
Yes	58.01.01.225	Permit to Construct Processing Fee	This regulation is applicable to this facility.
Yes	58.01.01.226	Payment of Fees for Permits to Construct	This regulation is applicable to this facility.
No	58.01.01.227	Receipt and Usage of Fees	These regulations specify various requirements for the Department.
Yes	58.01.01.228	Appeals	SFW understands that it may be able to file an appeal within thirty-five (35) days of the date the SFW receives an assessment from the Department under Section 225, in accordance with IDAPA 58.01.23, "Rules of Administrative Procedure Before the Board of Environmental Quality."
No	58.01.01.229 -- 299	(Reserved)	
No	58.01.01.300 - 399	Procedures and Requirements for Tier I Operating Permits	SFW is below the Title V emission thresholds. Therefore, these requirements do not apply.

APPLICABLE REQUIREMENTS –Idaho Regulations

Applicable	Citation	Description	Comment
No	58.01.01.400 - 410	Procedures and Requirements for Tier II Operating Permits	SFW is below the Title V emission thresholds and is not seeking a Tier II Operating Permit. Therefore, these requirements do not apply.
No	58.01.01.411 -- 439	(Reserved)	
No	58.01.01.440	Requirements for Alternative Emission Limits (Bubbles)	SFW is below the Title V emission thresholds and is not seeking a Tier II Operating Permit. Therefore, these requirements do not apply
No	58.01.01.441	Demonstration of Ambient Equivalence	SFW is below the Title V emission thresholds and is not seeking a Tier II Operating Permit. Therefore, these requirements do not apply e these provisions if future circumstances arise.
No	58.01.01.442 -- 459	(Reserved)	
No	58.01.01.460	Requirements for Emission Reduction Credit	SFW is below the Title V emission thresholds and is not seeking a Tier II Operating Permit. Therefore, these requirements do not apply
No	58.01.01.461	Requirements for Banking Emission Reduction Credits (ERCs)	SFW is below the Title V emission thresholds and is not seeking a Tier II Operating Permit. Therefore, these requirements do not apply
No	58.01.01.462 -- 499	(Reserved)	
No	58.01.01.500	Registration Procedures and Requirements for Portable Equipment	This regulation is not applicable to this facility.
No	58.01.01.501 -- 509	(Reserved)	
No	58.01.01.510 -- 516	Stack Heights and Dispersion Techniques, Applicability, Definitions, Requirements, Opportunity for Public Hearing, Approval of Field Studies and Fluid Models, No Restriction on Actual Stack Height	These regulations specify GEP for stack height determinations. This application is for the purposes of permit to construct for an existing facility.
No	58.01.01.517 -- 526	Motor Vehicle Inspection and Maintenance Program	SFW is not located in any of the counties or cities subject to these requirements. These regulations do not apply to SFW.
No	58.01.01.527 -- 549	(Reserved)	

APPLICABLE REQUIREMENTS –Idaho Regulations

Applicable	Citation	Description	Comment
No	58.01.01.550 – 553 58.01.01.554 – 555 (reserved) 58.01.01.556 --562	Air Pollution Emergency Rule, Episode Criteria, Stages, Effect of Stages, (Reserved), Criteria for Defining Levels Within Stages, Public Notification, Information to be Given, Manner and Frequency of Notification, Notification to Sources, General Rules, Specific Emergency Episode Abatement Plans for Point Sources	Currently there are no projects or circumstances existing at the facility that would subject SFW to these provisions. However, SFW recognizes the potential enforcement of these provisions if future circumstances arise.
No	58.01.01.563 -- 574	Transportation Conformity, Incorporation by Reference, Abbreviations, Definitions for the Purpose of Sections 563 Through 574 and 582, Agencies Affected by Consultation, ICC Member Roles in Consultation, ICC Member Responsibilities in Consultation, General Consultation Process, Consultation Procedures, Final Conformity Determinations by USDOT, Resolving Conflicts, Public Consultation Procedures	These regulations specify various requirements for the regulatory agencies. These regulations are not applicable to this facility.
No	58.01.01.575	Air Quality Standards and Area Classification	This is an introductory section and contains no requirements.
No	58.01.01.576	General Provisions for Ambient Air Quality Standards	These regulations set forth ambient air quality standards for the state, and contain no facility-specific requirements.
No	58.01.01.577	Ambient Air Quality Standards for Specific Air Pollutants	These regulations set forth ambient air quality standards for the state, and contain no facility-specific requirements.
No	58.01.01.578	Designation of Attainment, Unclassifiable, and Nonattainment Areas	These regulations set forth ambient air quality standards for the state, and contain no facility-specific requirements.
No	58.01.01.579	Baselines for Prevention of Significant Deterioration	These regulations set forth ambient air quality standards for the state, and contain no facility-specific requirements.
No	58.01.01.580	Classification of Prevention of Significant Deterioration Areas	These regulations set forth ambient air quality standards for the state, and contain no facility-specific requirements.
No	58.01.01.581	Prevention of Significant Deterioration (PSD) Increments	These regulations set forth ambient air quality standards for the state, and contain no facility-specific requirements.
No	58.01.01.582	Interim Conformity Provisions for Northern Ada County Former Nonattainment Area for PM-10	These regulations set forth ambient air quality standards for the state, and contain no facility-specific requirements.
No	58.01.01.583 -- 584	(Reserved)	
No	58.01.01.585	Toxic Air Pollutants Non-carcinogenic Increments	These regulations set forth ambient air quality standards for the state, and contain no facility-specific requirements.

APPLICABLE REQUIREMENTS –Idaho Regulations

Applicable	Citation	Description	Comment
No	58.01.01.586	Toxic Air Pollutants Carcinogenic Increments	These regulations set forth ambient air quality standards for the state, and contain no facility-specific requirements.
No	58.01.01.587	Listing or Delisting Toxic Air Pollutant Increments	Currently there are no projects or circumstances existing at the facility that would subject SFW to these provisions. However, SFW reserves the right to use these provisions if future circumstances arise.
No	58.01.01.588 -- 589	(Reserved)	
No	58.01.01.590	New Source Performance Standards	There are no emitting units at the facility that are subject to NSPS regulations. This regulation does not apply.
No	58.01.01.591	National Emission Standards for Hazardous Air Pollutants	There are no emitting units at the facility that are subject to NESHAPs regulations. This regulation does not apply.
No	58.01.01.592 -- 599	Stage 1 Vapor Collection, Affected Equipment or Processes, Compliance Dates, Submerged Fill Requirements, Vapor Balance Requirements, Testing and Monitoring Requirements, Registration, Recordkeeping, and Reporting Requirements, Gasoline Cargo Tanks.	These regulations set forth requirements for Stage 1 vapor collection systems for facilities with underground storage tanks greater than 10,000 gallons. SFW does not have affected equipment under these regulations and they do not apply.
No	58.01.01.600 – 603, 604 -- 605, 606 -- 616	Rules for Control of Open Burning, Fire Permits, Hazardous Materials, and Liability, Non-preemption of Other Jurisdictions, General Restrictions, (Reserved), Categories of Allowable Burning, Recreational and Warming Fires, Weed Control Fires, Training Fires, Industrial Flares, Residential Solid Waste Disposal Fires, Landfill Disposal Site Fires, Orchard Fires, Prescribed Burning, Dangerous Material Fires, Infectious Waste Burning	Currently there are no projects or circumstances existing at the facility that would subject SFW to these provisions. However, SFW recognizes the potential enforcement of these provisions if future circumstances arise.
No	58.01.01.617	Crop Residue Disposal	Currently there are no projects or circumstances existing at the facility that would subject SFW to these provisions. However, SFW recognizes the potential enforcement of these provisions if future circumstances arise.
No	58.01.01.618 -- 624	(Reserved)	Currently there are no projects or circumstances existing at the facility that would subject SFW to these provisions. However, SFW recognizes the potential enforcement of these provisions if future circumstances arise.

APPLICABLE REQUIREMENTS –Idaho Regulations

Applicable	Citation	Description	Comment
Yes	58.01.01.625	Visible Emissions	This regulation is not applicable to this facility.
No	58.01.01.626	General Restrictions on Visible Emissions From Wigwam Burners	SFW does not own or operate a wigwam burner; therefore this regulation is applicable to this facility.
No	58.01.01.627 -- 649	(Reserved)	
Yes	58.01.01.650, 651	Rules for Control of Fugitive Dust, General Rules	This regulation is not applicable to this facility.
No	58.01.01.652 -- 664	(Reserved)	
No	58.01.01.665	Regional Haze Rules	These regulations specify various requirements for the Department.
No	58.01.01.666	Reasonable Progress Goals	These regulations specify various requirements for the Department.
No	58.01.01.667	Long-Term Strategy for Regional Haze	These regulations specify various requirements for the Department.
No	58.01.01.668	BART Requirement for Regional Haze	These regulations specify various requirements for the Department.
No	58.01.01.669 -- 674	(Reserved)	
No	58.01.01.675	Fuel Burning Equipment -- Particulate Matter	This is an introductory section and contains no requirements.
No	58.01.01.676	Standards for New Sources	SFW does not have any fuel burning equipment with a maximum rated input of 10 mmbtu/hr or more. Therefore, these standards do not apply to this facility.
Yes	58.01.01.677	Standards for Minor and Existing Sources	SFW does have fuel burning equipment with a maximum rated input of less than 10 mmbtu/hr. These standards apply to the facility.
No	58.01.01.678	Combinations of Fuels	Currently there are no projects or circumstances existing at the facility that would subject SFW to these provisions. However, SFW recognizes the potential enforcement of these provisions if future circumstances arise.
Yes	58.01.01.679	Averaging Period	This regulation is applicable to this facility.
Yes	58.01.01.680	Altitude Correction	This regulation is applicable to this facility.

APPLICABLE REQUIREMENTS –Idaho Regulations

Applicable	Citation	Description	Comment
Yes	58.01.01.681	Test Methods and Procedures	This regulation is applicable to this facility.
No	58.01.01.682 -- 699	(Reserved)	
Yes	58.01.01.700	Particulate Matter -- Process Weight Limitations	This regulation is applicable to this facility. The emission inventory indicates that no source currently emits more than 1 lb of particulate matter per hour. Currently there are no projects or circumstances existing at the facility that would subject SFW to these provisions. However, SFW recognizes the potential enforcement of these provisions if future circumstances arise.
Yes	58.01.01.701	Particulate Matter -- New Equipment Process Weight Limitations	This regulation is applicable to this facility. The emission inventory indicates that no source currently emits more than 1 lb of particulate matter per hour. Currently there are no projects or circumstances existing at the facility that would subject SFW to these provisions. However, SFW recognizes the potential enforcement of these provisions if future circumstances arise.
Yes	58.01.01.702	Particulate Matter -- Existing Equipment Process Weight Limitations	This regulation is applicable to this facility. The emission inventory indicates that no source currently emits more than 1 lb of particulate matter per hour. Currently there are no projects or circumstances existing at the facility that would subject SFW to these provisions. However, SFW recognizes the potential enforcement of these provisions if future circumstances arise.
Yes	58.01.01.703	Particulate Matter -- Other Processes	This regulation is applicable to this facility. The emission inventory indicates that no source currently emits more than 1 lb of particulate matter per hour. Currently there are no projects or circumstances existing at the facility that would subject SFW to these provisions. However, SFW recognizes the potential enforcement of these provisions if future circumstances arise.
No	58.01.01.704 -- 724	(Reserved)	
Yes	58.01.01.725	Rules for Sulfur Content of Fuels	This regulation is applicable to this facility.
No	58.01.01.750	Rules for Control of Fluoride Emissions	This is an introductory section and contains no requirements.
No	58.01.01.751	General Rules	This facility does not operate this type of equipment; therefore, this regulation does not apply.
No	58.01.01.752 -- 759	(Reserved)	

APPLICABLE REQUIREMENTS –Idaho Regulations

Applicable	Citation	Description	Comment
No	58.01.01.760	Rules for the Control of Ammonia from Dairy Farms	This is an introductory section and contains no requirements.
No	58.01.01.761-764	General Applicability, Permit by Rule, Registration for Permit by Rule, Dairy Farm Best Management Practices	This facility does not operate this type of equipment; therefore, this regulation does not apply.
No	58.01.01.765 -- 774	(Reserved)	
Yes	58.01.01.775, 776	Rules for Control of Odors, General Rules	These regulations are applicable to this facility.
No	58.01.01.777 -- 784	(Reserved)	
No	58.01.01.785 - 788	Rules for Control of Incinerators	This facility does not operate incinerators; therefore these rules do not apply to this facility.
No	58.01.01.788 -- 789	(Reserved)	
No	58.01.01.790 -- 799	Rules for the Control of Nonmetallic Mineral Processing Plants, General Control Requirements, Emissions Standards for Nonmetallic Mineral Processing Plants Subject to 40 CFR 60, Subpart OOO, Emissions Standards for Nonmetallic Mineral Processing Plants Not Subject to 40 CFR 60, Subpart OOO, Permit Requirements, Permit by Rule Requirements, Applicability, Registration for Permit by Rule, Electrical Generators, Nonmetallic Mineral Processing Plant Fugitive Dust Best Management Practice	This facility does not operate this type of equipment; therefore, these regulations do not apply.
No	58.01.01.800 -- 802	Registration Fee for Permit by Rule, Payment of Fees for Permits by Rule Registration, Receipt and Usage of Fees	This application is for the purposes of a permit to construct for an existing facility. This application does not seek a permit by rule; therefore, these regulations do not apply at this time.
No	58.01.01.803 -- 804	(Reserved)	
No	58.01.01.805 -- 808	Rules for Control of Hot-Mix Asphalt Plants, Emission Limits, Multiple Stacks, Fugitive Dust Control	This facility does not operate this type of equipment; therefore, these regulations do not apply.
No	58.01.01.809 -- 814	(Reserved)	

APPLICABLE REQUIREMENTS –Idaho Regulations

Applicable	Citation	Description	Comment
No	58.01.01.815 -- 826	Rules for Control of Kraft Pulping Mills, Statement of Policy, General Rules, Recovery Furnace Standards, Recovery Furnace TRS Standards, Digester and Evaporator Standards, Recovery Furnace Particulate Standards, Lime Kiln Standards, Smelt Tank Standards, Monitoring and Reporting, Special Studies, Exceptions	This facility does not operate this type of equipment; therefore, these regulations do not apply.
No	58.01.01.827 -- 834	(Reserved)	
No	58.01.01.835 -- 839	Rules for Control of Rendering Plants, Control of Cookers, Control of Expellers, Control of Plant Air, Exceptions	This facility does not operate this type of equipment; therefore, these regulations do not apply.
No	58.01.01.840 -- 844	(Reserved)	
No	58.01.01.845 -- 848	Rules for Control of Sulfur Oxide Emissions from Sulfuric Acid Plants, Emission Limits, Monitoring and Testing, Compliance Schedule	This facility does not operate this type of equipment; therefore, these regulations do not apply.
No	58.01.01.849 -- 854	(Reserved)	
No	58.01.01.855-858	Combined Zinc and Lead Smelters, Combined Zinc and Lead Smelters -- Control of Fugitive Sulfur Dioxide Emissions, Combined Zinc and Lead Smelters -- Oxides of Sulfur, Stack Monitoring Requirements	This facility does not operate this type of equipment; therefore, these regulations do not apply.
No	58.01.01.859	Standards of Performance for Municipal Solid Waste Landfills That Commenced Construction, Reconstruction or Modification on or after May 30, 1991	This facility does not operate this type of equipment; therefore, these regulations do not apply.
No	58.01.01.860	Emission Guidelines for Municipal Solid Waste Landfills That Commenced Construction, Reconstruction or Modification Before May 30, 1991	This facility does not operate this type of equipment; therefore, these regulations do not apply.
No	58.01.01.861	Standards of Performance for Hospital/Medical/ Infectious Waste Incinerators That Commenced Construction After June 20, 1996, or for Which Modification is Commenced After March 16, 1998	This facility does not operate this type of equipment; therefore, these regulations do not apply.
No	58.01.01.862	Emission Guidelines for Hospital/Medical/Infectious Waste Incinerators That Commenced Construction Before June 20, 1996	This facility does not operate this type of equipment; therefore, these regulations do not apply.
No	58.01.01.863 -- 999	(Reserved)	

Subpart MMMM—National Emission Standards for Hazardous Air Pollutants for Surface Coating of Miscellaneous Metal Parts and Products

Source: 69 FR 157, Jan. 2, 2004, unless otherwise noted.

What This Subpart Covers

§ 63.3880 What is the purpose of this subpart?

This subpart establishes national emission standards for hazardous air pollutants (NESHAP) for miscellaneous metal parts and products surface coating facilities. This subpart also establishes requirements to demonstrate initial and continuous compliance with the emission limitations.

§ 63.3881 Am I subject to this subpart?

(a) Miscellaneous metal parts and products include, but are not limited to, metal components of the following types of products as well as the products themselves: motor vehicle parts and accessories, bicycles and sporting goods, recreational vehicles, extruded aluminum structural components, railroad cars, heavy duty trucks, medical equipment, lawn and garden equipment, electronic equipment, magnet wire, steel drums, industrial machinery, metal pipes, and numerous other industrial, household, and consumer products. Except as provided in paragraph (c) of this section, the source category to which this subpart applies is the surface coating of any miscellaneous metal parts or products, as described in paragraph (a)(1) of this section, and it includes the subcategories listed in paragraphs (a)(2) through (6) of this section.

(1) Surface coating is the application of coating to a substrate using, for example, spray guns or dip tanks. When application of coating to a substrate occurs, then surface coating also includes associated activities, such as surface preparation, cleaning, mixing, and storage. However, these activities do not comprise surface coating if they are not directly related to the application of the coating. Coating application with handheld, non-refillable aerosol containers, touch-up markers, marking pens, or the application of paper film or plastic film which may be pre-coated with an adhesive by the manufacturer are not coating operations for the purposes of this subpart.

(2) The general use coating subcategory includes all surface coating operations that are not high performance, magnet wire, rubber-to-metal, or extreme performance fluoropolymer coating operations.

(3) The high performance coating subcategory includes surface coating operations that are performed using coatings that meet the definition of high performance architectural coating or high temperature coating in §63.3981.

(4) The magnet wire coating subcategory includes surface coating operations that are performed using coatings that meet the definition of magnet wire coatings in §63.3981.

(5) The rubber-to-metal coatings subcategory includes surface coating operations that are performed using coatings that meet the definition of rubber-to-metal coatings in §63.3981.

(6) The extreme performance fluoropolymer coatings subcategory includes surface coating operations that are performed using coatings that meet the definition of extreme performance fluoropolymer coatings in §63.3981.

(b) You are subject to this subpart if you own or operate a new, reconstructed, or existing affected source, as defined in §63.3882, that uses 946 liters (250 gallons (gal)) per year, or more, of coatings that contain hazardous air pollutants (HAP) in the surface coating of miscellaneous metal parts and products defined in paragraph (a) of this section; and that is a major source, is located at a major source, or is part of a major source of emissions of HAP. A major source of HAP emissions is any stationary source or group of stationary sources located within a contiguous area and under common control that emits or has the potential to emit any single HAP at a rate of 9.07 megagrams (Mg) (10 tons) or more per year or any combination of HAP at a rate of 22.68 Mg (25 tons) or more per year. You do not need to include coatings that meet the definition of non-HAP coating contained in §63.3981 in determining whether you use 946 liters (250 gal) per year, or more, of coatings in the surface coating of miscellaneous metal parts and products.

Southern Field Welding (SFW) is not a major source of HAPs. Therefore, this subpart does not apply and no further discussion is required.

Subpart HHHHHH—National Emission Standards for Hazardous Air Pollutants: Paint Stripping and Miscellaneous Surface Coating Operations at Area Sources

Source: 73 FR 1759, Jan. 9, 2008, unless otherwise noted.

What This Subpart Covers

§ 63.11169 What is the purpose of this subpart?

Except as provided in paragraph (d) of this section, this subpart establishes national emission standards for hazardous air pollutants (HAP) for area sources involved in any of the activities in paragraphs (a) through (c) of this section. This subpart also establishes requirements to demonstrate initial and continuous compliance with the emission standards contained herein.

(a) Paint stripping operations that involve the use of chemical strippers that contain methylene chloride (MeCl), Chemical Abstract Service number 75092, in paint removal processes;

Southern Field Welding (SFW) does not use MeCl, CAS 75092, in paint removal processes.

(b) Autobody refinishing operations that encompass motor vehicle and mobile equipment spray-applied surface coating operations;

SFW does not perform autobody refinishing operations that encompass motor vehicle and mobile equipment spray-applied surface coating operations.

(c) Spray application of coatings containing compounds of chromium (Cr), lead (Pb), manganese (Mn), nickel (Ni), or cadmium (Cd), collectively referred to as the target HAP to any part or product made of metal or plastic, or combinations of metal and plastic that are not motor vehicles or mobile equipment.

SFW does not apply spray application of coatings containing compounds of chromium chromium (Cr), lead (Pb), manganese (Mn), nickel (Ni), or cadmium (Cd), collectively referred to as the target HAP to any part or product made of metal or plastic, or combinations of metal and plastic that are not motor vehicles or mobile equipment. Therefore, this subpart does not apply and no further discussion is required.

MACT (40 CFR 63) APPLICABILITY DEAILED ANALYSIS

DEQ AIR QUALITY PROGRAM
1410 N. Hilton, Boise, ID 83706
For assistance, call the
Air Permit Hotline – 1-877-5PERMIT

AIR PERMIT APPLICATION

Revision 6
10/7/09

For each box in the table below, CTRL+click on the blue underlined text for instructions and information.

IDENTIFICATION	
1. Company Name: Southern Field Welding	2. Facility Name: Southern Field Welding
3. Brief Project Description:	Small manufacturing facility that conducts welding and surface coating activities.

APPLICABILITY DETERMINATION	
4. List applicable subparts of the New Source Performance Standards (NSPS) (40 CFR part 60). Examples of NSPS affected emissions units include internal combustion engines, boilers, turbines, etc. The applicant must thoroughly review the list of affected emissions units.	List of applicable subpart(s): ☑ Not Applicable
5. List applicable subpart(s) of the National Emission Standards for Hazardous Air Pollutants (NESHAP) found in 40 CFR part 61 and 40 CFR part 63. Examples of affected emission units include solvent cleaning operations, industrial cooling towers, paint stripping and miscellaneous surface coating. EPA has a web page dedicated to NESHAP that should be useful to applicants.	List of applicable subpart(s): 40 CFR Part 63 Part XXXXXX National Emission Standards for Hazardous Air Pollutants Area Source Standards for Nine Metal Fabrication and Finishing Source Categories ☐ Not Applicable
6. For each subpart identified above, conduct a complete a regulatory analysis using the instructions and referencing the example provided on the following pages. **Note** - Regulatory reviews must be submitted with sufficient detail so that DEQ can verify applicability and document in legal terms why the regulation applies. Regulatory reviews that are submitted with insufficient detail will be determined incomplete.	☑ A detailed regulatory review is provided (Follow instructions and example). ☐ DEQ has already been provided a detailed regulatory review. Give a reference to the document including the date.

IF YOU ARE UNSURE HOW TO ANSWER ANY OF THESE QUESTIONS, CALL THE AIR PERMIT HOTLINE AT 1-877-5PERMIT

It is emphasized that it is the applicant's responsibility to satisfy all technical and regulatory requirements, and that DEQ will help the applicant understand what those requirements are prior to the application being submitted but that DEQ will not perform the required technical or regulatory analysis on the applicant's behalf.

Instructions for Form FRA

Item 4 & 5. It is important that facilities review the most recent federal regulations when submitting their permit application to DEQ. Current federal regulations can be found at the following Web site: http://ecfr.gpoaccess.gov/cgi/t/text/text-idx?&c=ecfr&tpl=/ecfrbrowse/Title40/40tab_02.tpl.

Item 6. For each applicable subpart identified under items 4-5 conduct a complete regulatory analysis. The facility must follow the procedure given below or obtain permission from DEQ to provide the necessary information using an alternative procedure:

1. Retrieve a TEXT or PDF copy of the applicable federal regulation subpart(s) online at http://www.gpoaccess.gov/cfr/retrieve.html

2. Copy and paste the regulation(s) into your DEQ air permit application.

3. Highlight or underline sections in the regulation(s) that are applicable to the source(s).

4. Under each section of the subpart, explain why the source is subject to the section, or why the source is not subject to the section. When providing the explanation use a different font than the regulation (i.e. ***bold, italic***) so that it is easy for the reader to determine the text that the applicant has provided. An example NSPS regulatory analysis is attached. The applicant must provide all necessary information needed to determine applicability. If information is lacking or the analysis is incomplete the application will be determined incomplete.

   EPA provides a web site dedicated to NSPS/NESHAP applicability determinations that may be useful to applicants. Follow this link to the applicability determination index Clean Air Act Applicability Determination Index - Compliance Monitoring - EPA. Another useful source of information is the preamble to the regulation which is published in the Federal Register on the date the regulation was promulgated. Federal Registers may be found online at Federal Register: Main Page. The date the regulation was published in the Federal Register is included in the footnotes of the regulation.

5. DEQ will assist in identifying the applicable requirements that the applicant must include in the application but will not perform the required technical or regulatory analysis on the applicant's behalf. Applicants should contact the Air Quality Permit Hotline (1-877-573-7648) to discuss NSPS/NESHAP regulatory analysis requirements or to schedule a meeting.

6. It also benefits facilities to document a non-applicability determination on federal air regulations which appear to apply to the facility but actually do not. A non-applicability determination will avoid future confusion and expedite the air permit application review. If you conduct an applicability determination and find that your activity is not NSPS or NESHAP affected facility an analysis should be submitted using the methods described above.

7. **It is not sufficient to simply provide a copy of the NSPS or NESHAP. The applicant must address each section of the regulation as described above and as shown in the example that is provided.**

EXAMPLE OF A NSPS REGULATORY ANALYSIS

[Title 40, Volume 6]
[Revised as of July 1, 2008]
From the U.S. Government Printing Office via GPO Access
[CITE: 40CFR60]

TITLE 40--PROTECTION OF ENVIRONMENT

CHAPTER I--ENVIRONMENTAL PROTECTION AGENCY (CONTINUED)

PART 60_STANDARDS OF PERFORMANCE FOR NEW STATIONARY SOURCES--
Table of Contents

Subpart H_Standards of Performance for Sulfuric Acid Plants

Sec.60.80 Applicability and designation of affected facility.

(a) The provisions of this subpart are applicable to each sulfuric acid production unit, which is the affected facility.
(b) Any facility under paragraph (a) of this section that commences construction or modification after August 17, 1971, is subject to the requirements of this subpart.

ACME Chemicals, Inc. is proposing to construct after August 17, 1971 a sulfuric acid plant which burns elemental sulfur as defined by 40 CFR 60.81(a). ACME is therefore affected by this subpart.

(Be sure to use the terms of the regulation to describe applicability; usually applicability is determined based on a specific date, definition of an affected facility, and rated input capacity. All of the applicability criteria must be addressed by the applicant.)

Note - if a determination of non-applicability is being submitted it is not necessary to address the remaining non-applicable regulatory sections. Be sure to provide the applicability determination in terms of the regulation (i.e. construction/modification date, rated input capacity, definition of affected facility).

Sec.60.81 Definitions.

As used in this subpart, all terms not defined herein shall have the meaning given them in the Act and in subpart A of this part.
(a) Sulfuric acid production unit means any facility producing sulfuric acid by the contact process by burning elemental sulfur, alkylation acid, hydrogen sulfide, organic sulfides and mercaptans, or acid sludge, but does not include facilities where conversion to sulfuric acid is utilized primarily as a means of preventing emissions to the atmosphere of sulfur dioxide or other sulfur compounds.
(b) Acid mist means sulfuric acid mist, as measured by Method 8 of appendix A to this part or an equivalent or alternative method.

ACME Chemicals, Inc. has read and understands these definitions and used them in providing this regulatory analysis.

Sec.60.82 Standard for sulfur dioxide.

(a) On and after the date on which the performance test required to be conducted by Sec.60.8 is completed, no owner or operator subject to the provisions of this subpart shall cause to be discharged into the atmosphere from any affected facility any gases which contain sulfur dioxide in excess of 2 kg per metric ton of acid produced (4 lb per ton), the production being expressed as 100 percent H2/SO4/.

ACME Chemicals, Inc. is subject to this standard and has provided a documented emission inventory (or manufacturer guarantee) which shows compliance.

Sec.60.83 Standard for acid mist.

(a) On and after the date on which the performance test required to be conducted by Sec.60.8 is completed, no owner or operator subject to the provisions of this subpart shall cause to be discharged into the atmosphere from any affected facility any gases which:

(1) Contain acid mist, expressed as H2/SO4/, in excess of 0.075 kg per metric ton of acid produced (0.15 lb per ton), the production being expressed as 100 percent H2/SO4/.

ACME Chemicals, Inc. is subject to this standard and has provided a documented emission inventory (or manufacturer guarantee) which shows compliance.

(2) Exhibit 10 percent opacity, or greater.

ACME Chemicals, Inc. understands that this will become a permit condition and has supplied a manufacturer guarantee that the sulfuric acid plant will comply with this standard.

Sec.60.84 Emission monitoring.

(a) A continuous monitoring system for the measurement of sulfur dioxide shall be installed, calibrated, maintained, and operated by the owner or operator. The pollutant gas used to prepare calibration gas mixtures under Performance Specification 2 and for calibration checks under Sec.60.13(d), shall be sulfur dioxide (SO2/). Method 8 shall be used for conducting monitoring system performance evaluations under Sec.60.13(c) except that only the sulfur dioxide portion of the Method 8 results shall be used. The span value shall be set at 1000 ppm of sulfur dioxide.

(b) The owner or operator shall establish a conversion factor for the purpose of converting monitoring data into units of the applicable standard (kg/metric ton, lb/ton). The conversion factor shall be determined, as a minimum, three times daily by measuring the concentration of sulfur dioxide entering the converter using suitable methods (e.g., the Reich test, National Air Pollution Control Administration Publication No. 999-AP-13) and calculating the appropriate conversion factor for each eight-hour period as follows:

$$CF=k[(1.000-0.015r)/(r-s)]$$

where:

CF=conversion factor (kg/metric ton per ppm, lb/ton per ppm).
k=constant derived from material balance. For determining CF in metric units, k=0.0653. For determining CF in English units, k=0.1306.
r=percentage of sulfur dioxide by volume entering the gas converter. Appropriate corrections must be made for air injection plants subject to the Administrator's approval.
s=percentage of sulfur dioxide by volume in the emissions to the atmosphere determined by the continuous monitoring system required under paragraph (a) of this section.

(c) The owner or operator shall record all conversion factors and values under paragraph (b) of this section from which they were computed (i.e., CF, r, and s).

ACME Chemicals, Inc. is not proposing to utilize Sections 60.84(a)-(c)listed above to monitor emissions. Instead ACME Chemicals is utilizing 40 CFR 60.84(d) listed below to monitor emissions of sulfur dioxide.

(d) Alternatively, a source that processes elemental sulfur or an ore that contains elemental sulfur and uses air to supply oxygen may use the following continuous emission monitoring approach and calculation procedures in determining SO2/ emission rates in terms of the standard. This procedure is not required, but is an alternative that would alleviate problems encountered in the measurement of gas velocities or production rate. Continuous emission monitoring systems for measuring SO2/, O2/, and CO2/ (if required) shall be installed, calibrated, maintained, and operated by the owner or operator and subjected to the certification procedures in Performance Specifications 2 and 3. The calibration procedure and span value for the SO2/ monitor shall be as specified in paragraph (b) of this section. The span value for CO2/ (if required) shall be 10 percent and for O2/ shall be 20.9 percent (air). A conversion factor based on process rate data is not necessary. Calculate the SO2/ emission rate as follows:

Es/=(Cs/ S)/[0.265-(0.126 %O2/)-(A
%CO2/)]

where:

Es/=emission rate of SO2/, kg/metric ton (lb/ton) of 100 percent of H2/SO4/ produced.
Cs/=concentration of SO2/, kg/dscm (lb/dscf).
S=acid production rate factor, 368 dscm/metric ton (11,800 dscf/ton) of 100 percent H2/SO4/ produced.
%O2/=oxygen concentration, percent dry basis.
A=auxiliary fuel factor,
=0.00 for no fuel.
=0.0226 for methane.
=0.0217 for natural gas.
=0.0196 for propane.
=0.0172 for No 2 oil.
=0.0161 for No 6 oil.
=0.0148 for coal.
=0.0126 for coke.
%CO2/= carbon dioxide concentration, percent dry basis.

Note: It is necessary in some cases to convert measured concentration units to other units for these calculations:

Use the following table for such conversions:

From--	To--	Multiply by--
g/scm	kg/scm	10-3
mg/scm	kg/scm	10-6
ppm (SO2)	kg/scm	2.660x10-6
ppm (SO2)	lb/scf	1.660x10-7

ACME Chemicals, Inc. has elected to use the monitoring requirements of the preceding section.

(e) For the purpose of reports under Sec.60.7(c), periods of excess emissions shall be all three-hour periods (or the arithmetic average of three consecutive one-hour periods) during which the integrated average sulfur dioxide emissions exceed the applicable standards under Sec.60.82.

ACME acknowledges that this section applies to the sulfuric acid plant.

Sec.60.85 Test methods and procedures.

(a) In conducting the performance tests required in Sec.60.8, the owner or operator shall use as reference methods and procedures the test methods in appendix A of this part or other methods and procedures as specified in this section, except as provided in Sec.60.8(b). Acceptable alternative methods and procedures are given in paragraph (c) of this section.

(b) The owner or operator shall determine compliance with the SO2/ acid mist, and visible emission standards in Sec. Sec. 60.82 and 60.83 as follows:

(1) The emission rate (E) of acid mist or SO2/ shall be computed for each run using the following equation:

E=(CQsd/)/(PK)

where:

E=emission rate of acid mist or SO2/ kg/metric ton (lb/ton) of 100 percent H2/SO4/ produced.
C=concentration of acid mist or SO2/, g/dscm (lb/dscf).
Qsd/=volumetric flow rate of the effluent gas, dscm/hr (dscf/hr).
P=production rate of 100 percent H2/SO4/, metric ton/hr (ton/hr).
K=conversion factor, 1000 g/kg (1.0 lb/lb).

(2) Method 8 shall be used to determine the acid mist and SO2/ concentrations (C's) and the volumetric flow rate (Qsd/) of the effluent gas. The moisture content may be considered to be zero. The sampling time and sample volume for each run shall be at least 60 minutes and 1.15 dscm (40.6 dscf).

(3) Suitable methods shall be used to determine the production rate (P) of 100 percent H2/SO4/ for each run. Material balance over the production system shall be used to confirm the production rate.

(4) Method 9 and the procedures in Sec.60.11 shall be used to determine opacity.

(c) The owner or operator may use the following as alternatives to

the reference methods and procedures specified in this section:

(1) If a source processes elemental sulfur or an ore that contains elemental sulfur and uses air to supply oxygen, the following procedure may be used instead of determining the volumetric flow rate and production rate:

(i) The integrated technique of Method 3 is used to determine the O2/ concentration and, if required, CO2/ concentration.

(ii) The SO2/ or acid mist emission rate is calculated as described in Sec.60.84(d), substituting the acid mist concentration for Cs/ as appropriate.

ACME Chemicals, Inc. acknowledges that performance tests shall be conducted as specified above.

Subpart MMMM—National Emission Standards for Hazardous Air Pollutants for Surface Coating of Miscellaneous Metal Parts and Products

Source: 69 FR 157, Jan. 2, 2004, unless otherwise noted.

What This Subpart Covers

§ 63.3880 What is the purpose of this subpart?

This subpart establishes national emission standards for hazardous air pollutants (NESHAP) for miscellaneous metal parts and products surface coating facilities. This subpart also establishes requirements to demonstrate initial and continuous compliance with the emission limitations.

§ 63.3881 Am I subject to this subpart?

(a) Miscellaneous metal parts and products include, but are not limited to, metal components of the following types of products as well as the products themselves: motor vehicle parts and accessories, bicycles and sporting goods, recreational vehicles, extruded aluminum structural components, railroad cars, heavy duty trucks, medical equipment, lawn and garden equipment, electronic equipment, magnet wire, steel drums, industrial machinery, metal pipes, and numerous other industrial, household, and consumer products. Except as provided in paragraph (c) of this section, the source category to which this subpart applies is the surface coating of any miscellaneous metal parts or products, as described in paragraph (a)(1) of this section, and it includes the subcategories listed in paragraphs (a)(2) through (6) of this section.

(1) Surface coating is the application of coating to a substrate using, for example, spray guns or dip tanks. When application of coating to a substrate occurs, then surface coating also includes associated activities, such as surface preparation, cleaning, mixing, and storage. However, these activities do not comprise surface coating if they are not directly related to the application of the coating. Coating application with handheld, non-refillable aerosol containers, touch-up markers, marking pens, or the application of paper film or plastic film which may be pre-coated with an adhesive by the manufacturer are not coating operations for the purposes of this subpart.

(2) The general use coating subcategory includes all surface coating operations that are not high performance, magnet wire, rubber-to-metal, or extreme performance fluoropolymer coating operations.

(3) The high performance coating subcategory includes surface coating operations that are performed using coatings that meet the definition of high performance architectural coating or high temperature coating in §63.3981.

(4) The magnet wire coating subcategory includes surface coating operations that are performed using coatings that meet the definition of magnet wire coatings in §63.3981.

(5) The rubber-to-metal coatings subcategory includes surface coating operations that are performed using coatings that meet the definition of rubber-to-metal coatings in §63.3981.

(6) The extreme performance fluoropolymer coatings subcategory includes surface coating operations that are performed using coatings that meet the definition of extreme performance fluoropolymer coatings in §63.3981.

(b) You are subject to this subpart if you own or operate a new, reconstructed, or existing affected source, as defined in §63.3882, that uses 946 liters (250 gallons (gal)) per year, or more, of coatings that contain hazardous air pollutants (HAP) in the surface coating of miscellaneous metal parts and products defined in paragraph (a) of this section; and that is a major source, is located at a major source, or is part of a major source of emissions of HAP. A major source of HAP emissions is any stationary source or group of stationary sources located within a contiguous area and under common control that emits or has the potential to emit any single HAP at a rate of 9.07 megagrams (Mg) (10 tons) or more per year or any combination of HAP at a rate of 22.68 Mg (25 tons) or more per year. You do not need to include coatings that meet the definition of non-HAP coating contained in §63.3981 in determining whether you use 946 liters (250 gal) per year, or more, of coatings in the surface coating of miscellaneous metal parts and products.

Southern Field Welding (SFW) is not a major source of HAPs. Therefore, this subpart does not apply and no further discussion is required.

Subpart HHHHHH—National Emission Standards for Hazardous Air Pollutants: Paint Stripping and Miscellaneous Surface Coating Operations at Area Sources

Source: 73 FR 1759, Jan. 9, 2008, unless otherwise noted.

What This Subpart Covers

§ 63.11169 What is the purpose of this subpart?

Except as provided in paragraph (d) of this section, this subpart establishes national emission standards for hazardous air pollutants (HAP) for area sources involved in any of the activities in paragraphs (a) through (c) of this section. This subpart also establishes requirements to demonstrate initial and continuous compliance with the emission standards contained herein.

(a) Paint stripping operations that involve the use of chemical strippers that contain methylene chloride (MeCl), Chemical Abstract Service number 75092, in paint removal processes;

Southern Field Welding (SFW) does not use MeCl, CAS 75092, in paint removal processes.

(b) Autobody refinishing operations that encompass motor vehicle and mobile equipment spray-applied surface coating operations;

SFW does not perform autobody refinishing operations that encompass motor vehicle and mobile equipment spray-applied surface coating operations.

(c) Spray application of coatings containing compounds of chromium (Cr), lead (Pb), manganese (Mn), nickel (Ni), or cadmium (Cd), collectively referred to as the target HAP to any part or product made of metal or plastic, or combinations of metal and plastic that are not motor vehicles or mobile equipment.

SFW does not apply spray application of coatings containing compounds of chromium chromium (Cr), lead (Pb), manganese (Mn), nickel (Ni), or cadmium (Cd), collectively referred to as the target HAP to any part or product made of metal or plastic, or combinations of metal and plastic that are not motor vehicles or mobile equipment. Therefore, this subpart does not apply and no further discussion is required.

Southern Field Welding – Applicability of 40 CFR Part 63 Subpart XXXXXX—National Emission Standards for Hazardous Air Pollutants Area Source Standards for Nine Metal Fabrication and Finishing Source Categories

Subpart XXXXXX—National Emission Standards for Hazardous Air Pollutants Area Source Standards for Nine Metal Fabrication and Finishing Source Categories

Source: 73 FR 43000, July 23, 2008, unless otherwise noted.

Applicability and Compliance Dates

§ 63.11514 Am I subject to this subpart?

(a) You are subject to this subpart if you own or operate an area source that is primarily engaged in the operations in one of the nine source categories listed in paragraphs (a)(1) through (9) of this section. Descriptions of these source categories are shown in Table 1 of this subpart. "Primarily engaged" is defined in §63.11522, "What definitions apply to this subpart?"

(1) Electrical and Electronic Equipment Finishing Operations;

(2) Fabricated Metal Products;

(3) Fabricated Plate Work (Boiler Shops);

(4) Fabricated Structural Metal Manufacturing;

(5) Heating Equipment, except Electric;

(6) Industrial Machinery and Equipment Finishing Operations;

(7) Iron and Steel Forging;

(8) Primary Metal Products Manufacturing; and

(9) Valves and Pipe Fittings.

Southern Field Welding (SFW) manufactures equipment that generally meets the description of Industrial Machinery and Equipment Finishing Operations as presented in Table 1 of this subpart.

(b) The provisions of this subpart apply to each new and existing affected source listed and defined in paragraphs (b)(1) through (5) of this section if you use materials that contain or have the potential to emit metal fabrication or finishing metal HAP (MFHAP), defined to be the compounds of cadmium, chromium, lead, manganese, and nickel, or any of these metals in the elemental form with the exception of lead. Materials that contain MFHAP are defined to be

materials that contain greater than 0.1 percent for carcinogens, as defined by OSHA at 29 CFR 1910.1200(d)(4), and greater than 1.0 percent for non-carcinogens. For the MFHAP, this corresponds to materials that contain cadmium, chromium, lead, or nickel in amounts greater than or equal to 0.1 percent by weight (of the metal), and materials that contain manganese in amounts greater than or equal to 1.0 percent by weight (of the metal), as shown in formulation data provided by the manufacturer or supplier, such as the Material Safety Data Sheet for the material.

(1) A dry abrasive blasting affected source is the collection of all equipment and activities necessary to perform dry abrasive blasting operations which use materials that contain MFHAP or that have the potential to emit MFHAP.

Southern Field Welding uses the abrasive material SHARPSHOT® manufactured by Minerals Research & Recovery, Inc. SHARPSHOT® does contain nickel and chromium(III) >0.1% by weight.. Therefore, the dry abrasive blasting operations at SFW are an affected source under this subpart.

(2) A machining affected source is the collection of all equipment and activities necessary to perform machining operations which use materials that contain MFHAP, as defined in §63.11522, "What definitions apply to this subpart?", or that have the potential to emit MFHAP.

SFW does perform machining operations which uses materials that contain MFHAP as defined in this subpart. Therefore, SFW does have any machining affected sources under this subpart.

(3) A dry grinding and dry polishing with machines affected source is the collection of all equipment and activities necessary to perform dry grinding and dry polishing with machines operations which use materials that contain MFHAP, as defined in §63.11522, "What definitions apply to this subpart?", or have the potential to emit MFHAP.

SFW does not perform dry grinding and dry polishing with machines which use materials that contain MFHAP as defined in this subpart. Therefore, SFW does not have any dry grinding and dry polishing with machines affected sources under this subpart.

(4) A spray painting affected source is the collection of all equipment and activities necessary to perform spray-applied painting operations using paints which contain MFHAP. A spray painting affected source includes all equipment used to apply cleaning materials to a substrate to prepare it for paint application (surface preparation) or to remove dried paint; to apply a paint to a substrate (paint application) and to dry or cure the paint after application; or to clean paint operation equipment (equipment cleaning). Affected source(s) subject to the requirements of this paragraph are not subject to the miscellaneous surface coating provisions of subpart HHHHHH of this part, "National Emission Standards for Hazardous Air Pollutants: Paint Stripping and Miscellaneous Surface Coating Operations at Area Sources."

The material safety data sheets (MSDSs) of all of the paints, coatings, and preparation materials indicate that none of the MFHAPs are present in these materials. The MSDSs for

these materials are included in this application for reference. Therefore, SFW does not have spray painting affected sources under this subpart.

(5) A welding affected source is the collection of all equipment and activities necessary to perform welding operations which use materials that contain MFHAP, as defined in §63.11522, "What definitions apply to this subpart?", or have the potential to emit MFHAP.

The arc welding operations at SFW utilizes welding electrodes which contain MFHAP as defined in this subpart. The arc welding operations at SFW which use materials containing MFHAPs are an affected source under this subpart.

(c) An affected source is existing if you commenced construction or reconstruction of the affected source, as defined in §63.2, "General Provisions" to part 63, before April 3, 2008.

SFW commenced construction before April 3, 2008. Therefore SFWs affected sources are existing under this subpart.

(d) An affected source is new if you commenced construction or reconstruction of the affected source, as defined in §63.2, "General Provisions" to part 63, on or after April 3, 2008.

(e) This subpart does not apply to research or laboratory facilities, as defined in section 112(c)(7) of the Clean Air Act (CAA).

(f) This subpart does not apply to tool or equipment repair operations, facility maintenance, or quality control activities as defined in §63.11522, "What definitions apply to this subpart?"

(g) This subpart does not apply to operations performed on site at installations owned or operated by the Armed Forces of the United States (including the Coast Guard and the National Guard of any such state), the National Aeronautics and Space Administration, or the National Nuclear Security Administration.

(h) This subpart does not apply to operations that produce military munitions, as defined in §63.11522, "What definitions apply to this subpart?", manufactured by or for the Armed Forces of the United States (including the Coast Guard and the National Guard of any such state), or equipment directly and exclusively used for the purposes of transporting military munitions.

(i) You are exempt from the obligation to obtain a permit under 40 CFR part 70 or 40 CFR part 71, provided you are not otherwise required by law to obtain a permit under 40 CFR 70.3(a) or 40 CFR 71.3(a). Notwithstanding the previous sentence, you must continue to comply with the provisions of this subpart.

Parts (d) through (i) above do not apply to SFW.

§ 63.11515 What are my compliance dates?

(a) If you own or operate an existing affected source, you must achieve compliance with the applicable provisions in this subpart by July 25, 2011.

SFW recently became aware of the requirements to be in compliance with this subpart. SFW will work to become fully compliant with the applicable provisions of this subpart in a timely manner.

(b) If you own or operate a new affected source, you must achieve compliance with the applicable provisions in this subpart by July 23, 2008, or upon startup of your affected source, whichever is later.

SFW is an existing source and this does not apply.

Standards and Compliance Requirements

§ 63.11516 What are my standards and management practices?

(a) *Dry abrasive blasting standards.* If you own or operate a new or existing dry abrasive blasting affected source, you must comply with the requirements in paragraphs (a)(1) through (3) of this section, as applicable, for each dry abrasive blasting operation that uses materials that contain MFHAP, as defined in §63.11522, "What definitions apply to this subpart?", or has the potential to emit MFHAP. These requirements do not apply when abrasive blasting operations are being performed that do not use any materials containing MFHAP or do not have the potential to emit MFHAP.

(1) *Standards for dry abrasive blasting of objects performed in totally enclosed and unvented blast chambers.* If you own or operate a new or existing dry abrasive blasting affected source which consists of an abrasive blasting chamber that is totally enclosed and unvented, as defined in §63.11522, "What definitions apply to this subpart?", you must implement management practices to minimize emissions of MFHAP. These management practices are the practices specified in paragraph (a)(1)(i) and (ii) of this section.

(i) You must minimize dust generation during emptying of abrasive blasting enclosures; and

(ii) You must operate all equipment associated with dry abrasive blasting operations according to the manufacturer's instructions.

SFW does not perform dry abrasive blasting of objects in a totally enclosed and unvented blast chamber. Therefore, this standard does not apply.

(2) *Standards for dry abrasive blasting of objects performed in vented enclosures.* If you own or operate a new or existing dry abrasive blasting affected source which consists of a dry abrasive blasting operation which has a vent allowing any air or blast material to escape, you must comply with the requirements in paragraphs (a)(2)(i) and (ii) of this section. Dry abrasive blasting operations for which the items to be blasted exceed 8 feet (2.4 meters) in any dimension, may be performed subject to the requirements in paragraph (a)(3) of this section.

(i) You must capture emissions and vent them to a filtration control device. You must operate the filtration control device according to manufacturer's instructions, and you must demonstrate compliance with this requirement by maintaining a record of the manufacturer's specifications for the filtration control devices, as specified by the requirements in §63.11519(c)(4), "What are my notification, recordkeeping, and reporting requirements?"

SFW does capture emissions from abrasive blasting and vents emissions through a filtration control device. SFW operates the control device according to the manufacturer's instructions and will maintain records as specified by the requirements in §63.11519(c)(4).

(ii) You must implement the management practices to minimize emissions of MFHAP as specified in paragraphs (a)(2)(ii)(A) through (C) of this section.

(A) You must take measures necessary to minimize excess dust in the surrounding area to reduce MFHAP emissions, as practicable; and

(B) You must enclose dusty abrasive material storage areas and holding bins, seal chutes and conveyors that transport abrasive materials; and

(C) You must operate all equipment associated with dry abrasive blasting operations according to manufacturer's instructions.

SFW acknowledges these management practices and will implement them at the facility.

(3) *Standards for dry abrasive blasting of objects greater than 8 feet (2.4 meters) in any one dimension.* If you own or operate a new or existing dry abrasive blasting affected source which consists of a dry abrasive blasting operation which is performed on objects greater than 8 feet (2.4 meters) in any one dimension, you may implement management practices to minimize emissions of MFHAP as specified in paragraph (a)(3)(i) of this section instead of the practices required by paragraph (a)(2) of this section. You must demonstrate that management practices are being implemented by complying with the requirements in paragraphs (a)(3)(ii) through (iv) of this section.

(i) Management practices for dry abrasive blasting of objects greater than 8 feet (2.4 meters) in any one dimension are specified in paragraphs (a)(3)(i)(A) through (E) of this section.

(A) You must take measures necessary to minimize excess dust in the surrounding area to reduce MFHAP emissions, as practicable; and

(B) You must enclose abrasive material storage areas and holding bins, seal chutes and conveyors that transport abrasive material; and

(C) You must operate all equipment associated with dry abrasive blasting operations according to manufacturer's instructions; and

(D) You must not re-use dry abrasive blasting media unless contaminants (i.e., any material other than the base metal, such as paint residue) have been removed by filtration or screening, and the abrasive material conforms to its original size; and

(E) Whenever practicable, you must switch from high particulate matter (PM)-emitting blast media (e.g., sand) to low PM-emitting blast media (e.g., crushed glass, specular hematite, steel shot, aluminum oxide), where PM is a surrogate for MFHAP.

(ii) You must perform visual determinations of fugitive emissions, as specified in §63.11517(b), "What are my monitoring requirements?", according to paragraphs (a)(3)(ii)(A) or (B) of this section, as applicable.

(A) For abrasive blasting of objects greater than 8 feet (2.4 meters) in any one dimension that is performed outdoors, you must perform visual determinations of fugitive emissions at the fenceline or property border nearest to the outdoor dry abrasive blasting operation.

(B) For abrasive blasting of objects greater than 8 feet (2.4 meters) in any one dimension that is performed indoors, you must perform visual determinations of fugitive emissions at the primary vent, stack, exit, or opening from the building containing the abrasive blasting operations.

(iii) You must keep a record of all visual determinations of fugitive emissions along with any corrective action taken in accordance with the requirements in §63.11519(c)(2), "What are my notification, recordkeeping, and reporting requirements?"

(iv) If visible fugitive emissions are detected, you must perform corrective actions until the visible fugitive emissions are eliminated, at which time you must comply with the requirements in paragraphs (a)(3)(iv)(A) and (B) of this section.

(A) You must perform a follow-up inspection for visible fugitive emissions in accordance with §63.11517(a), "Monitoring Requirements."

(B) You must report all instances where visible emissions are detected, along with any corrective action taken and the results of subsequent follow-up inspections for visible emissions, with your annual certification and compliance report as required by §63.11519(b)(5), "Notification, recordkeeping, and reporting requirements."

SFW acknowledges these standards for abrasive blasting of objects greater than 8 feet in any one dimension. SFW acknowledges that it may choose these alternative standards to demonstrate compliance instead of the practices required by paragraph (a)(2) of this section.

(b) *Standards for machining.* If you own or operate a new or existing machining affected source, you must implement management practices to minimize emissions of MFHAP as specified in paragraph (b)(1) and (2) of this section for each machining operation that uses materials that contain MFHAP, as defined in §63.11522, "What definitions apply to this subpart?", or has the potential to emit MFHAP. These requirements do not apply when machining operations are

being performed that do not use any materials containing MFHAP and do not have the potential to emit MFHAP.

(1) You must take measures necessary to minimize excess dust in the surrounding area to reduce MFHAP emissions, as practicable; and

(2) You must operate all equipment associated with machining according to manufacturer's instructions.

SFW acknowledges the standards for machining. SFW will implement the management practices listed above at the facility.

(c) *Standards for dry grinding and dry polishing with machines.* If you own or operate a new or existing dry grinding and dry polishing with machines affected source, you must comply with the requirements of paragraphs (c)(1) and (2) of this section for each dry grinding and dry polishing with machines operation that uses materials that contain MFHAP, as defined in §63.11522, "What definitions apply to this subpart?", or has the potential to emit MFHAP. These requirements do not apply when dry grinding and dry polishing operations are being performed that do not use any materials containing MFHAP and do not have the potential to emit MFHAP.

(1) You must capture emissions and vent them to a filtration control device. You must demonstrate compliance with this requirement by maintaining a record of the manufacturer's specifications for the filtration control devices, as specified by the requirements in §63.11519(c)(4), "Notification, recordkeeping, and reporting Requirements."

(2) You must implement management practices to minimize emissions of MFHAP as specified in paragraphs (c)(2)(i) and (ii) of this section.

(i) You must take measures necessary to minimize excess dust in the surrounding area to reduce MFHAP emissions, as practicable;

(ii) You must operate all equipment associated with the operation of dry grinding and dry polishing with machines, including the filtration control device, according to manufacturer's instructions.

SFW does not perform dry grinding and dry polishing with machines which use materials that contain MFHAP as defined in this subpart. Therefore, SFW does not have any dry grinding and dry polishing with machines affected sources under this subpart.

(d) *Standards for control of MFHAP in spray painting.* If you own or operate a new or existing spray painting affected source, as defined in §63.11514 (b)(4), "Am I subject to this subpart?," you must implement the management practices in paragraphs (d)(1) through (9) of this section when a spray-applied paint that contains MFHAP is being applied. These requirements do not apply when spray-applied paints that do not contain MFHAP are being applied.

(1) *Standards for spray painting for MFHAP control.* All spray-applied painting of objects must meet the requirements of paragraphs (d)(1)(i) through (iii) of this section. These requirements do not apply to affected sources located at Fabricated Structural Metal Manufacturing facilities, as described in Table 1, "Description of Source Categories Affected by this Subpart," or affected sources that spray paint objects greater than 15 feet (4.57 meters), that are not spray painted in spray booths or spray rooms.

(i) Spray booths or spray rooms must have a full roof, at least two complete walls, and one or two complete side curtains or other barrier material so that all four sides are covered. The spray booths or spray rooms must be ventilated so that air is drawn into the booth and leaves only though the filter. The roof may contain narrow slots for connecting fabricated products to overhead cranes, and/or for cords or cables.

(ii) All spray booths or spray rooms must be fitted with a type of filter technology that is demonstrated to achieve at least 98 percent capture of MFHAP. The procedure used to demonstrate filter efficiency must be consistent with the American Society of Heating, Refrigerating, and Air-Conditioning Engineers (ASHRAE) Method 52.1, "Gravimetric and Dust-Spot Procedures for Testing Air-Cleaning Devices Used in General Ventilation for Removing Particulate Matter, June 4, 1992" (incorporated by reference, see §63.14). The test coating for measuring filter efficiency shall be a high-solids bake enamel delivered at a rate of at least 135 grams per minute from a conventional (non-High Volume Low Pressure) air-atomized spray gun operating at 40 psi air pressure; the air flow rate across the filter shall be 150 feet per minute. Owners and operators may use published filter efficiency data provided by filter vendors to demonstrate compliance with this requirement and are not required to perform this measurement.

(iii) You must perform regular inspection and replacement of the filters in all spray booths or spray rooms according to manufacturer's instructions, and maintain documentation of these activities, as detailed in §63.11519(c)(5), "Notification, recordkeeping, and reporting requirements."

(iv) As an alternative compliance requirement, spray booths or spray rooms equipped with a water curtain, called "waterwash" or "waterspray" booths or spray rooms that are operated and maintained according to the manufacturer's specifications and that achieve at least 98 percent control of MFHAP, may be used in lieu of the spray booths or spray rooms requirements of paragraphs (d)(1)(i) through (iii) of this section.

(2) *Standards for spray painting application equipment of all objects painted for MFHAP control.* All paints applied via spray-applied painting must be applied with a high-volume, low-pressure (HVLP) spray gun, electrostatic application, airless spray gun, air-assisted airless spray gun, or an equivalent technology that is demonstrated to achieve transfer efficiency comparable to one of these spray gun technologies for a comparable operation, and for which written approval has been obtained from the Administrator. The procedure used to demonstrate that spray gun transfer efficiency is equivalent to that of an HVLP spray gun must be equivalent to the California South Coast Air Quality Management District's "Spray Equipment Transfer Efficiency Test Procedure for Equipment User, May 24, 1989" and "Guidelines for

Demonstrating Equivalency with District Approved Transfer Efficient Spray Guns, September 26, 2002", Revision 0 (incorporated by reference, see §63.14).

(3) *Spray system recordkeeping.* You must maintain documentation of the HVLP or other high transfer efficiency spray paint delivery methods, as detailed in §63.11519(c)(7), "Notification, recordkeeping, and reporting requirements."

(4) *Spray gun cleaning.* All cleaning of paint spray guns must be done with either non-HAP gun cleaning solvents, or in such a manner that an atomized mist of spray of gun cleaning solvent and paint residue is not created outside of a container that collects the used gun cleaning solvent. Spray gun cleaning may be done with, for example, by hand cleaning of parts of the disassembled gun in a container of solvent, by flushing solvent through the gun without atomizing the solvent and paint residue, or by using a fully enclosed spray gun washer. A combination of these non-atomizing methods may also be used.

(5) *Spray painting worker certification.* All workers performing painting must be certified that they have completed training in the proper spray application of paints and the proper setup and maintenance of spray equipment. The minimum requirements for training and certification are described in paragraph (d)(6) of this section. The spray application of paint is prohibited by persons who are not certified as having completed the training described in paragraph (d)(6) of this section. The requirements of this paragraph do not apply to the students of an accredited painting training program who are under the direct supervision of an instructor who meets the requirements of this paragraph. The requirements of this paragraph do not apply to operators of robotic or automated painting operations.

(6) *Spray painting training program content.* Each owner or operator of an affected spray painting affected source must ensure and certify that all new and existing personnel, including contract personnel, who spray apply paints are trained in the proper application of paints as required by paragraph (d)(5) of this section. The training program must include, at a minimum, the items listed in paragraphs (d)(6)(i) through (iii) of this section.

(i) A list of all current personnel by name and job description who are required to be trained;

(ii) Hands-on, or in-house or external classroom instruction that addresses, at a minimum, initial and refresher training in the topics listed in paragraphs (d)(6)(ii)(A) through (D) of this section.

(A) Spray gun equipment selection, set up, and operation, including measuring paint viscosity, selecting the proper fluid tip or nozzle, and achieving the proper spray pattern, air pressure and volume, and fluid delivery rate.

(B) Spray technique for different types of paints to improve transfer efficiency and minimize paint usage and overspray, including maintaining the correct spray gun distance and angle to the part, using proper banding and overlap, and reducing lead and lag spraying at the beginning and end of each stroke.

(C) Routine spray booth and filter maintenance, including filter selection and installation.

(D) Environmental compliance with the requirements of this subpart.

(iii) A description of the methods to be used at the completion of initial or refresher training to demonstrate, document, and provide certification of successful completion of the required training. Alternatively, owners and operators who can show by documentation or certification that a painter's work experience and/or training has resulted in training equivalent to the training required in paragraph (d)(6)(ii) of this section are not required to provide the initial training required by that paragraph to these painters.

(7) *Records of spray painting training.* You must maintain records of employee training certification for use of HVLP or other high transfer efficiency spray paint delivery methods as detailed in §63.11519(c)(8), "Notification, recordkeeping, and reporting requirements."

(8) *Spray painting training dates.* As required by paragraph (d)(5) of this section, all new and existing personnel at an affected spray painting affected source, including contract personnel, who spray apply paints must be trained by the dates specified in paragraphs (d)(8)(i) and (ii) of this section.

(i) If your source is a new source, all personnel must be trained and certified no later than January 20, 2009, 180 days after startup, or 180 days after hiring, whichever is later. Training that was completed within 5 years prior to the date training is required, and that meets the requirements specified in paragraph (d)(6)(ii) of this section satisfies this requirement and is valid for a period not to exceed 5 years after the date the training is completed.

(ii) If your source is an existing source, all personnel must be trained and certified no later than July 25, 2011, or 180 days after hiring, whichever is later. Worker training that was completed within 5 years prior to the date training is required, and that meets the requirements specified in paragraph (d)(6)(ii) of this section, satisfies this requirement and is valid for a period not to exceed 5 years after the date the training is completed.

(9) *Duration of training validity.* Training and certification will be valid for a period not to exceed 5 years after the date the training is completed. All personnel must receive refresher training that meets the requirements of this section and be re-certified every 5 years.

The material safety data sheets (MSDSs) of all of SFW's current paints, coatings, and preparation materials indicate that none of the MFHAPs are present in these materials. The MSDSs for these materials are included in this application for reference. Therefore, SFW does not currently have any spray painting affected sources subject to this subpart.

(e) [Reserved]

(f) *Standards for welding.* If you own or operate a new or existing welding affected source, you must comply with the requirements in paragraphs (f)(1) and (2) of this section for each welding operation that uses materials that contain MFHAP, as defined in §63.11522, "What definitions apply to this subpart?", or has the potential to emit MFHAP. If your welding affected source uses 2,000 pounds or more per year of welding rod containing one or more MFHAP (calculated on a

rolling 12-month basis), you must demonstrate that management practices or fume control measures are being implemented by complying with the requirements in paragraphs (f)(3) through (8) of this section. The requirements in paragraphs (f)(1) through (8) of this section do not apply when welding operations are being performed that do not use any materials containing MFHAP or do not have the potential to emit MFHAP.

(1) You must operate all equipment, capture, and control devices associated with welding operations according to manufacturer's instructions. You must demonstrate compliance with this requirement by maintaining a record of the manufacturer's specifications for the capture and control devices, as specified by the requirements in §63.11519(c)(4), "Notification, recordkeeping, and reporting requirements."

(2) You must implement one or more of the management practices specified in paragraphs (f)(2)(i) through (v) of this section to minimize emissions of MFHAP, as practicable, while maintaining the required welding quality through the application of sound engineering judgment.

(i) Use welding processes with reduced fume generation capabilities (e.g., gas metal arc welding (GMAW)—also called metal inert gas welding (MIG));

(ii) Use welding process variations (e.g., pulsed current GMAW), which can reduce fume generation rates;

(iii) Use welding filler metals, shielding gases, carrier gases, or other process materials which are capable of reduced welding fume generation;

(iv) Optimize welding process variables (e.g., electrode diameter, voltage, amperage, welding angle, shield gas flow rate, travel speed) to reduce the amount of welding fume generated; and

(v) Use a welding fume capture and control system, operated according to the manufacturer's specifications.

SFW acknowledges the above standards for welding. SFW acknowledges that it must implement one or more of the above listed management practices to minimize the emissions of MFHAP, as practicable, while maintaining the required welding quality through the application of sound engineering judgment.

(3) *Tier 1 compliance requirements for welding.* You must perform visual determinations of welding fugitive emissions as specified in §63.11517(b), "Monitoring requirements," at the primary vent, stack, exit, or opening from the building containing the welding operations. You must keep a record of all visual determinations of fugitive emissions along with any corrective action taken in accordance with the requirements in §63.11519(c)(2), "Notification, recordkeeping, and reporting requirements."

(4) *Requirements upon initial detection of visible emissions from welding.* If visible fugitive emissions are detected during any visual determination required in paragraph (f)(3) of this section, you must comply with the requirements in paragraphs (f)(4)(i) and (ii) of this section.

(i) Perform corrective actions that include, but are not limited to, inspection of welding fume sources, and evaluation of the proper operation and effectiveness of the management practices or fume control measures implemented in accordance with paragraph (f)(2) of this section. After completing such corrective actions, you must perform a follow-up inspection for visible fugitive emissions in accordance with §63.11517(a), "Monitoring Requirements," at the primary vent, stack, exit, or opening from the building containing the welding operations.

(ii) Report all instances where visible emissions are detected, along with any corrective action taken and the results of subsequent follow-up inspections for visible emissions, and submit with your annual certification and compliance report as required by §63.11519(b)(5), "Notification, recordkeeping, and reporting requirements."

(5) *Tier 2 requirements upon subsequent detection of visible emissions.* If visible fugitive emissions are detected more than once during any consecutive 12 month period (notwithstanding the results of any follow-up inspections), you must comply with paragraphs (f)(5)(i) through (iv) of this section.

(i) Within 24 hours of the end of the visual determination of fugitive emissions in which visible fugitive emissions were detected, you must conduct a visual determination of emissions opacity, as specified in §63.11517(c), "Monitoring requirements," at the primary vent, stack, exit, or opening from the building containing the welding operations.

(ii) In lieu of the requirement of paragraph (f)(3) of this section to perform visual determinations of fugitive emissions with EPA Method 22, you must perform visual determinations of emissions opacity in accordance with §63.11517(d), "Monitoring Requirements," using EPA Method 9, at the primary vent, stack, exit, or opening from the building containing the welding operations.

(iii) You must keep a record of each visual determination of emissions opacity performed in accordance with paragraphs (f)(5)(i) or (ii) of this section, along with any subsequent corrective action taken, in accordance with the requirements in §63.11519(c)(3), "Notification, recordkeeping, and reporting requirements."

(iv) You must report the results of all visual determinations of emissions opacity performed in accordance with paragraphs (f)(5)(i) or (ii) of this section, along with any subsequent corrective action taken, and submit with your annual certification and compliance report as required by §63.11519(b)(6), "Notification, recordkeeping, and reporting requirements."

(6) *Requirements for opacities less than or equal to 20 percent but greater than zero.* For each visual determination of emissions opacity performed in accordance with paragraph (f)(5) of this section for which the average of the six-minute average opacities recorded is 20 percent or less but greater than zero, you must perform corrective actions, including inspection of all welding fume sources, and evaluation of the proper operation and effectiveness of the management practices or fume control measures implemented in accordance with paragraph (f)(2) of this section.

(7) *Tier 3 requirements for opacities exceeding 20 percent.* For each visual determination of emissions opacity performed in accordance with paragraph (f)(5) of this section for which the average of the six-minute average opacities recorded exceeds 20 percent, you must comply with the requirements in paragraphs (f)(7)(i) through (v) of this section.

(i) You must submit a report of exceedence of 20 percent opacity, along with your annual certification and compliance report, as specified in §63.11519(b)(8), "Notification, recordkeeping, and reporting requirements," and according to the requirements of §63.11519(b)(1), "Notification, recordkeeping, and reporting requirements."

(ii) Within 30 days of the opacity exceedence, you must prepare and implement a Site-Specific Welding Emissions Management Plan, as specified in paragraph (f)(8) of this section. If you have already prepared a Site-Specific Welding Emissions Management Plan in accordance with this paragraph, you must prepare and implement a revised Site-Specific Welding Emissions Management Plan within 30 days.

(iii) During the preparation (or revision) of the Site-Specific Welding Emissions Management Plan, you must continue to perform visual determinations of emissions opacity, beginning on a daily schedule as specified in §63.11517(d), "Monitoring Requirements," using EPA Method 9, at the primary vent, stack, exit, or opening from the building containing the welding operations.

(iv) You must maintain records of daily visual determinations of emissions opacity performed in accordance with paragraph (f)(7)(iii) of this section, during preparation of the Site-Specific Welding Emissions Management Plan, in accordance with the requirements in §63.11519(b)(9), "Notification, recordkeeping, and reporting requirements."

(v) You must include these records in your annual certification and compliance report, according to the requirements of §63.11519(b)(1), "Notification, recordkeeping, and reporting requirements."

(8) *Site-Specific Welding Emissions Management Plan.* The Site-Specific Welding Emissions Management Plan must comply with the requirements in paragraphs (f)(8)(i) through (iii) of this section.

(i) Site-Specific Welding Emissions Management Plan must contain the information in paragraphs (f)(8)(i)(A) through (F) of this section.

(A) Company name and address;

(B) A list and description of all welding operations which currently comprise the welding affected source;

(C) A description of all management practices and/or fume control methods in place at the time of the opacity exceedence;

(D) A list and description of all management practices and/or fume control methods currently employed for the welding affected source;

(E) A description of additional management practices and/or fume control methods to be implemented pursuant to paragraph (f)(7)(ii) of this section, and the projected date of implementation; and

(F) Any revisions to a Site-Specific Welding Emissions Management Plan must contain copies of all previous plan entries, pursuant to paragraphs (f)(8)(i)(D) and (E) of this section.

(ii) The Site-Specific Welding Emissions Management Plan must be updated annually to contain current information, as required by paragraphs (f)(8)(i)(A) through (C) of this section, and submitted with your annual certification and compliance report, according to the requirements of §63.11519(b)(1), "Notification, recordkeeping, and reporting requirements."

(iii) You must maintain a copy of the current Site-Specific Welding Emissions Management Plan in your records in a readily-accessible location for inspector review, in accordance with the requirements in §63.11519(c)(12), "Notification, recordkeeping, and reporting requirements."

SFW acknowledges that conditions f(3) through (8) of this section apply if the welding affected source(s) use 2,000 pounds or more per year of welding rod containing one or more MFHAP (calculated on a rolling 12-month basis). SFW did use more than 2,000 lbs of welding rods containing one or more MFHAPs in 2011 and is subject to these requirments.

§ 63.11517 What are my monitoring requirements?

(a) *Visual determination of fugitive emissions, general.* Visual determination of fugitive emissions must be performed according to the procedures of EPA Method 22, of 40 CFR part 60, Appendix A–7. You must conduct the EPA Method 22 test while the affected source is operating under normal conditions. The duration of each EPA Method 22 test must be at least 15 minutes, and visible emissions will be considered to be present if they are detected for more than six minutes of the fifteen minute period.

(b) *Visual determination of fugitive emissions, graduated schedule.* Visual determinations of fugitive emissions must be performed in accordance with paragraph (a) of this section and according to the schedule in paragraphs (b)(1) through (4) of this section.

(1) *Daily Method 22 Testing.* Perform visual determination of fugitive emissions once per day, on each day the process is in operation, during operation of the process.

(2) *Weekly Method 22 Testing.* If no visible fugitive emissions are detected in consecutive daily EPA Method 22 tests, performed in accordance with paragraph (b)(1) of this section for 10 days of work day operation of the process, you may decrease the frequency of EPA Method 22 testing to once every five days of operation of the process (one calendar week). If visible fugitive emissions are detected during these tests, you must resume EPA Method 22 testing of that

operation once per day during each day that the process is in operation, in accordance with paragraph (b)(1) of this section.

(3) *Monthly Method 22 Testing.* If no visible fugitive emissions are detected in four consecutive weekly EPA Method 22 tests performed in accordance with paragraph (b)(2) of this section, you may decrease the frequency of EPA Method 22 testing to once per 21 days of operation of the process (one calendar month). If visible fugitive emissions are detected during these tests, you must resume weekly EPA Method 22 in accordance with paragraph (b)(2) of this section.

(4) *Quarterly Method 22 Testing.* If no visible fugitive emissions are detected in three consecutive monthly EPA Method 22 tests performed in accordance with paragraph (b)(3) of this section, you may decrease the frequency of EPA Method 22 testing to once per 60 days of operation of the process (3 calendar months). If visible fugitive emissions are detected during these tests, you must resume monthly EPA Method 22 in accordance with paragraph (b)(3) of this section.

(c) *Visual determination of emissions opacity for welding Tier 2 or 3, general.* Visual determination of emissions opacity must be performed in accordance with the procedures of EPA Method 9, of 40 CFR part 60, Appendix A–4, and while the affected source is operating under normal conditions. The duration of the EPA Method 9 test shall be thirty minutes.

(d) *Visual determination of emissions opacity for welding Tier 2 or 3, graduated schedule.* You must perform visual determination of emissions opacity in accordance with paragraph (c) of this section and according to the schedule in paragraphs (d)(1) through (5) of this section.

(1) *Daily Method 9 testing for welding, Tier 2 or 3.* Perform visual determination of emissions opacity once per day during each day that the process is in operation.

(2) *Weekly Method 9 testing for welding, Tier 2 or 3.* If the average of the six minute opacities recorded during any of the daily consecutive EPA Method 9 tests performed in accordance with paragraph (d)(1) of this section does not exceed 20 percent for 10 days of operation of the process, you may decrease the frequency of EPA Method 9 testing to once per five days of consecutive work day operation. If opacity greater than 20 percent is detected during any of these tests, you must resume testing every day of operation of the process according to the requirements of paragraph (d)(1) of this section.

(3) *Monthly Method 9 testing for welding Tier 2 or 3.* If the average of the six minute opacities recorded during any of the consecutive weekly EPA Method 9 tests performed in accordance with paragraph (d)(2) of this section does not exceed 20 percent for four consecutive weekly tests, you may decrease the frequency of EPA Method 9 testing to once per every 21 days of operation of the process. If visible emissions opacity greater than 20 percent is detected during any monthly test, you must resume testing every five days of operation of the process according to the requirements of paragraph (d)(2) of this section.

(4) *Quarterly Method 9 testing for welding Tier 2 or 3.* If the average of the six minute opacities recorded during any of the consecutive weekly EPA Method 9 tests performed in accordance

with paragraph (d)(3) of this section does not exceed 20 percent for three consecutive monthly tests, you may decrease the frequency of EPA Method 9 testing to once per every 120 days of operation of the process. If visible emissions opacity greater than 20 percent is detected during any quarterly test, you must resume testing every 21 days (month) of operation of the process according to the requirements of paragraph (d)(3) of this section.

(5) *Return to Method 22 testing for welding, Tier 2 or 3.* If, after two consecutive months of testing, the average of the six minute opacities recorded during any of the monthly EPA Method 9 tests performed in accordance with paragraph (d)(3) of this section does not exceed 20 percent, you may resume EPA Method 22 testing as in paragraphs (b)(3) and (4) of this section. In lieu of this, you may elect to continue performing EPA Method 9 tests in accordance with paragraphs (d)(3)and (4) of this section.

SFW acknowledges that it is subject to the above opacity monitoring requirements if:

- ***SFW chooses to demonstrate compliance using the standards for dry abrasive blasting of objects greater than 8 feet (2.4 meters) in any one dimension as described in §63.11516(a)(2).***
- ***SFW's welding affected source(s) use 2,000 pounds or more per year of welding rod containing one or more MFHAP (calculated on a rolling 12-month basis).***

SFW did use more than 2,000 lbs of welding rods containing one or more MFHAPs in 2011 and is subject to the opacity monitoring requirements.

§ 63.11518 [Reserved]

§ 63.11519 What are my notification, recordkeeping, and reporting requirements?

(a) *What notifications must I submit?* —(1) *Initial notification.* If you are the owner or operator of an area source in one of the nine metal fabrication and finishing source categories, as defined in §63.11514 "Am I subject to this subpart?," you must submit the Initial Notification required by §63.9(b) "General Provisions," for a new affected source no later than 120 days after initial startup or November 20, 2008, whichever is later. For an existing affected source, you must submit the Initial Notification no later than July 25, 2011. Your Initial Notification must provide the information specified in paragraphs (a)(1)(i) through (iv) of this section.

(i) The name, address, phone number and e-mail address of the owner and operator;

(ii) The address (physical location) of the affected source;

(iii) An identification of the relevant standard (i.e., this subpart); and

(iv) A brief description of the type of operation. For example, a brief characterization of the types of products (e.g., aerospace components, sports equipment, etc.), the number and type of processes, and the number of workers usually employed.

SFW acknowledges that it must comply with this initial notification requirement. SFW just recently became aware that it was subject to this subpart. SFW will submit a notification to the administrator per the requirements of this subpart in a timely manner.

(2) *Notification of compliance status.* If you are the owner or operator of an existing affected source, you must submit a notification of compliance status on or before November 22, 2011. If you are the owner or operator of a new affected source, you must submit a notification of compliance status within 120 days after initial startup, or by November 20, 2008, whichever is later. You are required to submit the information specified in paragraphs (a)(2)(i) through (iv) of this section with your notification of compliance status:

(i) Your company's name and address;

(ii) A statement by a responsible official with that official's name, title, phone number, e-mail address and signature, certifying the truth, accuracy, and completeness of the notification and a statement of whether the source has complied with all the relevant standards and other requirements of this subpart;

SFW acknowledges that it must submit a notification of compliance status and will do so in a timely manner.

(iii) If you operate any spray painting affected sources, the information required by §63.11516(e)(3)(vi)(C), "Compliance demonstration," or §63.11516(e)(4)(ix)(C), "Compliance demonstration," as applicable; and

(iv) The date of the notification of compliance status.

SFW does not currently have any spray painting affected sources subject to this subpart.

(b) *What reports must I prepare or submit?* –(1) *Annual certification and compliance reports.* You must prepare and submit annual certification and compliance reports for each affected source according to the requirements of paragraphs (b)(2) through (7) of this section. The annual certification and compliance reporting requirements may be satisfied by reports required under other parts of the CAA, as specified in paragraph (b)(3) of this section.

(2) *Dates.* Unless the Administrator has approved or agreed to a different schedule for submission of reports under §63.10(a), "General Provisions," you must prepare and submit each annual certification and compliance report according to the dates specified in paragraphs (b)(2)(i) through (iii) of this section. Note that the information reported for each of the months in the reporting period will be based on the last 12 months of data prior to the date of each monthly calculation.

(i) The first annual certification and compliance report must cover the first annual reporting period which begins the day after the compliance date and ends on December 31.

(ii) Each subsequent annual certification and compliance report must cover the subsequent semiannual reporting period from January 1 through December 31.

(iii) Each annual certification and compliance report must be prepared and submitted no later than January 31 and kept in a readily-accessible location for inspector review. If an exceedance has occurred during the year, each annual certification and compliance report must be submitted along with the exceedance reports, and postmarked or delivered no later than January 31.

SFW acknowledges that it is required to submit an annual certification report in accordance with the conditions above.

(3) *Alternate dates.* For each affected source that is subject to permitting regulations pursuant to 40 CFR part 70 or 40 CFR part 71, "Title V."

(i) If the permitting authority has established dates for submitting annual reports pursuant to 40 CFR 70.6(a)(3)(iii)(A) or 40 CFR 71.6(a)(3)(iii)(A), "Title V," you may prepare or submit, if required, the first and subsequent compliance reports according to the dates the permitting authority has established instead of according to the date specified in paragraph (b)(2)(iii) of this section.

(ii) If an affected source prepares or submits an annual certification and compliance report pursuant to this section along with, or as part of, the monitoring report required by 40 CFR 70.6(a)(3)(iii)(A) or 40 CFR 71.6(a)(3)(iii)(A), "Title V," and the compliance report includes all required information concerning exceedances of any limitation in this subpart, its submission will be deemed to satisfy any obligation to report the same exceedances in the annual monitoring report. However, submission of an annual certification and compliance report shall not otherwise affect any obligation the affected source may have to report deviations from permit requirements to the permitting authority.

SFW is not subject to "Title V" and this standard does not apply.

(4) *General requirements.* The annual certification and compliance report must contain the information specified in paragraphs (b)(4)(i) through (iii) of this section, and the information specified in paragraphs (b)(5) through (7) of this section that is applicable to each affected source.

(i) Company name and address;

(ii) Statement by a responsible official with that official's name, title, and signature, certifying the truth, accuracy, and completeness of the content of the report; and

(iii) Date of report and beginning and ending dates of the reporting period. The reporting period is the 12-month period ending on December 31. Note that the information reported for the 12 months in the reporting period will be based on the last 12 months of data prior to the date of each monthly calculation.

SFW acknowledges that the annual certification and compliance report must contain the information listed above.

(5) *Visual determination of fugitive emissions requirements.* The annual certification and compliance report must contain the information specified in paragraphs (b)(5)(i) through (iii) of this section for each affected source which performs visual determination of fugitive emissions in accordance with §63.11517(a), "Monitoring requirements."

(i) The date of every visual determination of fugitive emissions which resulted in detection of visible emissions;

(ii) A description of the corrective actions taken subsequent to the test; and

(iii) The date and results of the follow-up visual determination of fugitive emissions performed after the corrective actions.

(6) *Visual determination of emissions opacity requirements.* The annual certification and compliance report must contain the information specified in paragraphs (b)(6)(i) through (iii) of this section for each affected source which performs visual determination of emissions opacity in accordance with §63.11517(c), "Monitoring requirements."

(i) The date of every visual determination of emissions opacity;

(ii) The average of the six-minute opacities measured by the test; and

(iii) A description of any corrective action taken subsequent to the test.

SFW acknowledges that the annual certification and compliance report must contain the information above if:

- ***SFW chooses to demonstrate compliance using the standards for dry abrasive blasting of objects greater than 8 feet (2.4 meters) in any one dimension as described in §63.11516(a)(2).***
- ***SFW's welding affected source(s) use 2,000 pounds or more per year of welding rod containing one or more MFHAP (calculated on a rolling 12-month basis).***

SFW did use more than 2,000 lbs of welding rods containing one or more MFHAPs in 2011 and is subject to the above annual certification and compliance report requirements.

(7) [Reserved]

(8) *Exceedences of 20 percent opacity for welding affected sources.* As required by §63.11516(f)(7)(i), "Requirements for opacities exceeding 20 percent," you must prepare an exceedence report whenever the average of the six-minute average opacities recorded during a visual determination of emissions opacity exceeds 20 percent. This report must be submitted along with your annual certification and compliance report according to the requirements in

paragraph (b)(1) of this section, and must contain the information in paragraphs (b)(8)(iii)(A) and (B) of this section.

(A) The date on which the exceedence occurred; and

(B) The average of the six-minute average opacities recorded during the visual determination of emissions opacity.

SFW acknowledges that the annual certification and compliance report must include the above opacity exceedance information.

(9) *Site-specific Welding Emissions Management Plan reporting.* You must submit a copy of the records of daily visual determinations of emissions recorded in accordance with §63.11516(f)(7)(iv), "Tier 3 requirements for opacities exceeding 20 percent," and a copy of your Site-Specific Welding Emissions Management Plan and any subsequent revisions to the plan pursuant to §63.11516(f)(8), "Site-specific Welding Emission Management Plan," along with your annual certification and compliance report, according to the requirements in paragraph (b)(1) of this section.

SFW acknowledges that the site-specific welding emission management plan report must be submitted as part of the annual certification and compliance report.

(c) *What records must I keep?* You must collect and keep records of the data and information specified in paragraphs (c)(1) through (13) of this section, according to the requirements in paragraph (c)(14) of this section.

(1) *General compliance and applicability records.* Maintain information specified in paragraphs (c)(1)(i) through (ii) of this section for each affected source.

(i) Each notification and report that you submitted to comply with this subpart, and the documentation supporting each notification and report.

SFW acknowledges the above record keeping requirement.

(ii) Records of the applicability determinations as in §63.11514(b)(1) through (5), "Am I subject to this subpart," listing equipment included in its affected source, as well as any changes to that and on what date they occurred, must be maintained for 5 years and be made available for inspector review at any time.

SFW acknowledges the above record keeping requirement.

(2) *Visual determination of fugitive emissions records.* Maintain a record of the information specified in paragraphs (c)(2)(i) through (iii) of this section for each affected source which

performs visual determination of fugitive emissions in accordance with §63.11517(a), "Monitoring requirements."

(i) The date and results of every visual determination of fugitive emissions;

(ii) A description of any corrective action taken subsequent to the test; and

(iii) The date and results of any follow-up visual determination of fugitive emissions performed after the corrective actions.

(3) *Visual determination of emissions opacity records.* Maintain a record of the information specified in paragraphs (c)(3)(i) through (iii) of this section for each affected source which performs visual determination of emissions opacity in accordance with §63.11517(c), "Monitoring requirements."

(i) The date of every visual determination of emissions opacity; and

(ii) The average of the six-minute opacities measured by the test; and

(iii) A description of any corrective action taken subsequent to the test.

SFW acknowledges the opacity monitoring requirements listed above.

(4) Maintain a record of the manufacturer's specifications for the control devices used to comply with §63.11516, "What are my standards and management practices?"

SFW acknowledges that it must keep records of the manufactures specifications for the control devices to comply with §63.11516.

(5) *Spray paint booth filter records.* Maintain a record of the filter efficiency demonstrations and spray paint booth filter maintenance activities, performed in accordance with §63.11516(d)(1)(ii) and (iii), "Requirements for spray painting objects in spray booths or spray rooms."

(6) Waterspray booth or water curtain efficiency tests. Maintain a record of the water curtain efficiency demonstrations performed in accordance with §63.11516(d)(1)(ii), "Requirements for spray painting objects in spray booths or spray rooms."

(7) *HVLP or other high transfer efficiency spray delivery system documentation records.* Maintain documentation of HVLP or other high transfer efficiency spray paint delivery systems, in compliance with §63.11516(d)(3), "Requirements for spray painting of all objects." This documentation must include the manufacturer's specifications for the equipment and any manufacturer's operation instructions. If you have obtained written approval for an alternative spray application system in accordance with §63.11516(d)(2), "Spray painting of all objects," you must maintain a record of that approval along with documentation of the demonstration of equivalency.

(8) *HVLP or other high transfer efficiency spray delivery system employee training documentation records.* Maintain certification that each worker performing spray painting operations has completed the training specified in §63.11516(d)(6), "Requirements for spray painting of all objects," with the date the initial training and the most recent refresher training was completed.

SFW currently does not have any spray painting sources subject to this subpart and these record keeping requirements do not currently apply.

(9)–(10) [Reserved]

(11) *Visual determination of emissions opacity performed during the preparation (or revision) of the Site-Specific Welding Emissions Management Plan.* You must maintain a record of each visual determination of emissions opacity performed during the preparation (or revision) of a Site-Specific Welding Emissions Management Plan, in accordance with §63.11516(f)(7)(iii), "Requirements for opacities exceeding 20 percent."

(12) *Site-Specific Welding Emissions Management Plan.* If you have been required to prepare a plan in accordance with §63.11516(f)(7)(iii), "Site-Specific Welding Emissions Management Plan," you must maintain a copy of your current Site-Specific Welding Emissions Management Plan in your records and it must be readily available for inspector review.

SFW acknowledges the above recordkeeping requirements and will have them readily available for inspector review.

(13) *Manufacturer's instructions.* If you comply with this subpart by operating any equipment according to manufacturer's instruction, you must keep these instructions readily available for inspector review.

SFW will maintain records of manufactures instructions and have them readily available for inspector review.

(14) Welding Rod usage. If you operate a new or existing welding affected source which is not required to comply with the requirements of §63.11516(f)(3) through (8) because it uses less than 2,000 pounds per year of welding rod (on a rolling 12-month basis), you must maintain records demonstrating your welding rod usage on a rolling 12-month basis.

SFW acknowledges this recordkeeping requirement for welding rod usage. SFW will maintain records of welding rod usage on a rolling 12-month basis.

(15) Your records must be maintained according to the requirements in paragraphs (c)(14)(i) through (iii) of this section.

(i) Your records must be in a form suitable and readily available for expeditious review, according to §63.10(b)(1), "General Provisions." Where appropriate, the records may be maintained as electronic spreadsheets or as a database.

(ii) As specified in §63.10(b)(1), "General Provisions," you must keep each record for 5 years following the date of each occurrence, measurement, corrective action, report, or record.

(iii) You must keep each record on-site for at least 2 years after the date of each occurrence, measurement, corrective action, report, or record according to §63.10(b)(1), "General Provisions." You may keep the records off-site for the remaining 3 years.

SFW acknowledges the above record keeping requirements.

§ 63.11520 [Reserved]

Other Requirements and Information

§ 63.11521 Who implements and enforces this subpart?

(a) This subpart can be implemented and enforced by EPA or a delegated authority such as your state, local, or tribal agency. If the EPA Administrator has delegated authority to your state, local, or tribal agency, then that agency, in addition to EPA, has the authority to implement and enforce this subpart. You should contact your EPA Regional Office to find out if implementation and enforcement of this subpart is delegated to your state, local, or tribal agency.

(b) In delegating implementation and enforcement authority of this subpart to a state, local, or tribal agency under 40 CFR part 63, subpart E, the authorities contained in paragraph (c) of this section are retained by the EPA Administrator and are not transferred to the state, local, or tribal agency.

(c) The authorities that cannot be delegated to state, local, or tribal agencies are specified in paragraphs (c)(1) through (5) of this section.

(1) Approval of an alternative non-opacity emissions standard under §63.6(g), of the General Provisions of this part.

(2) Approval of an alternative opacity emissions standard under §63.6(h)(9), of the General Provisions of this part.

(3) Approval of a major change to test methods under §63.7(e)(2)(ii) and (f), of the General Provisions of this part. A "major change to test method" is defined in §63.90.

(4) Approval of a major change to monitoring under §63.8(f), of the General Provisions of this part. A "major change to monitoring" under is defined in §63.90.

(5) Approval of a major change to recordkeeping and reporting under §63.10(f), of the General Provisions of this part. A "major change to recordkeeping/reporting" is defined in §63.90.

SFW acknowledges the above implementation and enforcement information.

§ 63.11522 What definitions apply to this subpart?

The terms used in this subpart are defined in the CAA; and in this section as follows:

Adequate emission capture methods are hoods, enclosures, or any other duct intake devices with ductwork, dampers, manifolds, plenums, or fans designed to draw greater than 85 percent of the airborne dust generated from the process into the control device.

Capture system means the collection of components used to capture gases and fumes released from one or more emissions points and then convey the captured gas stream to a control device or to the atmosphere. A capture system may include, but is not limited to, the following components as applicable to a given capture system design: duct intake devices, hoods, enclosures, ductwork, dampers, manifolds, plenums, and fans.

Cartridge collector means a type of control device that uses perforated metal cartridges containing a pleated paper or non-woven fibrous filter media to remove PM from a gas stream by sieving and other mechanisms. Cartridge collectors can be designed with single use cartridges, which are removed and disposed after reaching capacity, or continuous use cartridges, which typically are cleaned by means of a pulse-jet mechanism.

Confined abrasive blasting enclosure means an enclosure that includes a roof and at least two complete walls, with side curtains and ventilation as needed to insure that no air or PM exits the enclosure while dry abrasive blasting is performed. Apertures or slots may be present in the roof or walls to allow for mechanized transport of the blasted objects with overhead cranes, or cable and cord entry into the dry abrasive blasting chamber.

Control device means equipment installed on a process vent or exhaust system that reduces the quantity of a pollutant that is emitted to the air.

Dry abrasive blasting means cleaning, polishing, conditioning, removing or preparing a surface by propelling a stream of abrasive material with compressed air against the surface. Hydroblasting, wet abrasive blasting, or other abrasive blasting operations which employ liquids to reduce emissions are not dry abrasive blasting.

Dry grinding and dry polishing with machines means grinding or polishing without the use of lubricating oils or fluids in fixed or stationary machines. Hand grinding, hand polishing, and bench top dry grinding and dry polishing are not included under this definition.

Fabric filter means a type of control device used for collecting PM by filtering a process exhaust stream through a filter or filter media; a fabric filter is also known as a baghouse.

Facility maintenance means operations performed as part of the routine repair or renovation of process equipment, machinery, control equipment, and structures that comprise the infrastructure of the affected facility and that are necessary for the facility to function in its intended capacity. Facility maintenance also includes operations associated with the installation of new equipment or structures, and any processes as part of janitorial activities. Facility maintenance includes operations on stationary structures or their appurtenances at the site of installation, to portable buildings at the site of installation, to pavements, or to curbs. Facility maintenance also includes

operations performed on mobile equipment, such as fork trucks, that are used in a manufacturing facility and which are maintained in that same facility. Facility maintenance does not include spray-applied coating of motor vehicles, mobile equipment, or items that routinely leave and return to the facility, such as delivery trucks, rental equipment, or containers used to transport, deliver, distribute, or dispense commercial products to customers, such as compressed gas canisters.

Filtration control device means a control device that utilizes a filter to reduce the emissions of MFHAP and other PM.

Grinding means a process performed on a workpiece to remove undesirable material from the surface or to remove burrs or sharp edges. Grinding is done using belts, disks, or wheels consisting of or covered with various abrasives.

Machining means dry metal turning, milling, drilling, boring, tapping, planing, broaching, sawing, cutting, shaving, shearing, threading, reaming, shaping, slotting, hobbing, and chamfering with machines. Shearing operations cut materials into a desired shape and size, while forming operations bend or conform materials into specific shapes. Cutting and shearing operations include punching, piercing, blanking, cutoff, parting, shearing and trimming. Forming operations include bending, forming, extruding, drawing, rolling, spinning, coining, and forging the metal. Processes specifically excluded are hand-held devices and any process employing fluids for lubrication or cooling.

Material containing MFHAP means a material containing one or more MFHAP. Any material that contains cadmium, chromium, lead, or nickel in amounts greater than or equal to 0.1 percent by weight (as the metal), and contains manganese in amounts greater than or equal to 1.0 percent by weight (as the metal), as shown in formulation data provided by the manufacturer or supplier, such as the Material Safety Data Sheet for the material, is considered to be a material containing MFHAP.

Metal fabrication and finishing HAP (MFHAP) means any compound of the following metals: Cadmium, chromium, lead, manganese, or nickel, or any of these metals in the elemental form, with the exception of lead.

Metal fabrication and finishing source categories are limited to the nine metal fabrication and finishing source categories with the activities described in Table 1, "Description of Source Categories Affected by this Subpart." Metal fabrication or finishing operations means dry abrasive blasting, machining, spray painting, or welding in any one of the nine metal fabrication and finishing area source categories listed in Table 1, "Description of Source Categories Affected by this Subpart."

Military munitions means all ammunition products and components produced or used by or for the U.S. Department of Defense (DoD) or for the U.S. Armed Services for national defense and security, including military munitions under the control of the DoD, the U.S. Coast Guard, the National Nuclear Security Administration (NNSA), U.S. Department of Energy (DOE), and National Guard personnel. The term military munitions includes: Confined gaseous, liquid, and

solid propellants, explosives, pyrotechnics, chemical and riot control agents, smokes, and incendiaries used by DoD components, including bulk explosives and chemical warfare agents, chemical munitions, biological weapons, rockets, guided and ballistic missiles, bombs, warheads, small arms ammunition, grenades, mines, torpedoes, depth charges, cluster munitions and dispensers, demolition charges, nonnuclear components of nuclear weapons, wholly inert ammunition products, and all devices and components of any items listed in this definition.

Paint means a material applied to a substrate for decorative, protective, or functional purposes. Such materials include, but are not limited to, paints, coatings, sealants, liquid plastic coatings, caulks, inks, adhesives, and maskants. Decorative, protective, or functional materials that consist only of protective oils for metal, acids, bases, or any combination of these substances, or paper film or plastic film which may be pre-coated with an adhesive by the film manufacturer, are not considered paints for the purposes of this subpart.

Polishing with machines means an operation which removes fine excess metal from a surface to prepare the surface for more refined finishing procedures prior to plating or other processes. Polishing may also be employed to remove burrs on castings or stampings. Polishing is performed using hard-faced wheels constructed of muslin, canvas, felt or leather, and typically employs natural or artificial abrasives. Polishing performed by hand without machines or in bench top operations are not considered polishing with machines for the purposes of this subpart.

Primarily engaged means the manufacturing, fabricating, or forging of one or more products listed in one of the nine metal fabrication and finishing source category descriptions in Table 1, "Description of Source Categories Affected by this Subpart," where this production represents at least 50 percent of the production at a facility, and where production quantities are established by the volume, linear foot, square foot, or other value suited to the specific industry. The period used to determine production should be the previous continuous 12 months of operation. Facilities must document and retain their rationale for the determination that their facility is not "primarily engaged" pursuant to §63.10(b)(3) of the General Provisions.

Quality control activities means operations that meet all of the following criteria:

(1) The activities are intended to detect and correct defects in the final product by selecting a limited number of samples from the operation, and comparing the samples against specific performance criteria.

(2) The activities do not include the production of an intermediate or final product for sale or exchange for commercial profit; for example, parts that are not sold and do not leave the facility.

(3) The activities are not a normal part of the operation;

(4) The activities do not involve fabrication of tools, equipment, machinery, and structures that comprise the infrastructure of the facility and that are necessary for the facility to function in its intended capacity; that is, the activities are not facility maintenance.

Responsible official means responsible official as defined in 40 CFR 70.2.

Spray-applied painting means application of paints using a hand-held device that creates an atomized mist of paint and deposits the paint on a substrate. For the purposes of this subpart, spray-applied painting does not include the following materials or activities:

(1) Paints applied from a hand-held device with a paint cup capacity that is less than 3.0 fluid ounces (89 cubic centimeters).

(2) Surface coating application using powder coating, hand-held, non-refillable aerosol containers, or non-atomizing application technology, including, but not limited to, paint brushes, rollers, hand wiping, flow coating, dip coating, electrodeposition coating, web coating, coil coating, touch-up markers, or marking pens.

(3) Painting operations that normally require the use of an airbrush or an extension on the spray gun to properly reach limited access spaces; the application of paints that contain fillers that adversely affect atomization with HVLP spray guns, and the application of paints that normally have a dried film thickness of less than 0.0013 centimeter (0.0005 in.).

(4) Thermal spray operations (also known as metallizing, flame spray, plasma arc spray, and electric arc spray, among other names) in which solid metallic or non-metallic material is heated to a molten or semi-molten state and propelled to the work piece or substrate by compressed air or other gas, where a bond is produced upon impact.

Spray booth or spray room means an enclosure with four sides and a roof where spray paint is prevented from leaving the booth during spraying by the enclosure. The roof of the spray booth or spray room may contain narrow slots for connecting the parts and products to overhead cranes, or for cord or cable entry into the spray booth or spray room.

Tool or equipment repair means equipment and devices used to repair or maintain process equipment or to prepare molds, dies, or other changeable elements of process equipment.

Totally enclosed and unvented means enclosed so that no air enters or leaves during operation.

Totally enclosed and unvented dry abrasive blasting chamber means a dry abrasive blasting enclosure which has no vents to the atmosphere, thus no emissions. A typical example of this sort of abrasive blasting enclosure is a small "glove box" enclosure, where the worker places their hands in openings or gloves that extend into the box and enable the worker to hold the objects as they are being blasted without allowing air and blast material to escape the box.

Vented dry abrasive blasting means dry abrasive blasting where the blast material is moved by air flow from within the chamber to outside the chamber into the atmosphere or into a control device.

Welding means a process which joins two metal parts by melting the parts at the joint and filling the space with molten metal.

Welding rod containing MFHAP means a welding rod that contains cadmium, chromium, lead, or nickel in amounts greater than or equal to 0.1 percent by weight (as the metal), or that contains manganese in amounts greater than or equal to 1.0 percent by weight (as the metal), as shown in formulation data provided by the manufacturer or supplier, such as the Material Safety Data Sheet for the welding rod.

SFW has read and understands these definitions and used them in providing this regulatory analysis.

§ 63.11523 What General Provisions apply to this subpart?

The provisions in 40 CFR part 63, subpart A, applicable to sources subject to §63.11514(a) are specified in Table 2 of this subpart.

Table 1 to Subpart XXXXXX of Part 63—Description of Source Categories Affected by This Subpart

Metal fabrication and finishing source category	Description
Electrical and Electronic Equipment Finishing Operations	Establishments primarily engaged in manufacturing motors and generators; and electrical machinery, equipment, and supplies, not elsewhere classified. The electrical machinery equipment and supplies industry sector of this source category includes establishments primarily engaged in high energy particle acceleration systems and equipment, electronic simulators, appliance and extension cords, bells and chimes, insect traps, and other electrical equipment and supplies not elsewhere classified. The motors and generators sector of this source category includes establishments primarily engaged in manufacturing electric motors (except engine starting motors) and power generators; motor generator sets; railway motors and control equipment; and motors, generators and control equipment for gasoline, electric, and oil-electric buses and trucks.
Fabricated Metal Products	Establishments primarily engaged in manufacturing fabricated metal products, such as fire or burglary resistive steel safes and vaults and similar fire or burglary resistive products; and collapsible tubes of thin flexible metal. Also, establishments primarily engaged in manufacturing powder metallurgy products, metal boxes; metal ladders; metal household articles, such as ice cream freezers and ironing boards; and other fabricated metal products not elsewhere classified.
Fabricated Plate Work (Boiler Shops)	Establishments primarily engaged in manufacturing power marine boilers, pressure and nonpressure tanks, processing and storage vessels, heat exchangers, weldments and similar products.
Fabricated Structural Metal Manufacturing	Establishments primarily engaged in fabricating iron and steel or other metal for structural purposes, such as bridges, buildings, and sections for ships, boats, and barges.

Heating Equipment, except Electric	Establishments primarily engaged in manufacturing heating equipment, except electric and warm air furnaces, including gas, oil, and stoker coal fired equipment for the automatic utilization of gaseous, liquid, and solid fuels. Products produced in this source category include low-pressure heating (steam or hot water) boilers, fireplace inserts, domestic (steam or hot water) furnaces, domestic gas burners, gas room heaters, gas infrared heating units, combination gas-oil burners, oil or gas swimming pool heaters, heating apparatus (except electric or warm air), kerosene space heaters, gas fireplace logs, domestic and industrial oil burners, radiators (except electric), galvanized iron nonferrous metal range boilers, room heaters (except electric), coke and gas burning salamanders, liquid or gas solar energy collectors, solar heaters, space heaters (except electric), mechanical (domestic and industrial) stokers, wood and coal-burning stoves, domestic unit heaters (except electric), and wall heaters (except electric).
Industrial Machinery and Equipment Finishing Operations	Establishments primarily engaged in construction machinery manufacturing; oil and gas field machinery manufacturing; and pumps and pumping equipment manufacturing. The construction machinery manufacturing industry sector of this source category includes establishments primarily engaged in manufacturing heavy machinery and equipment of types used primarily by the construction industries, such as bulldozers; concrete mixers; cranes, except industrial plant overhead and truck-type cranes; dredging machinery; pavers; and power shovels. Also establishments primarily engaged in manufacturing forestry equipment and certain specialized equipment, not elsewhere classified, similar to that used by the construction industries, such as elevating platforms, ship cranes, and capstans, aerial work platforms, and automobile wrecker hoists. The oil and gas field machinery manufacturing industry sector of this source category includes establishments primarily engaged in manufacturing machinery and equipment for use in oil and gas fields or for drilling water wells, including portable drilling rigs. The pumps and pumping equipment manufacturing sector of this source category includes establishments primarily engaged in manufacturing pumps and pumping equipment for general industrial, commercial, or household use, except fluid power pumps and motors. This category includes establishments primarily engaged in manufacturing domestic water and sump pumps.
Iron and Steel Forging	Establishments primarily engaged in the forging manufacturing process, where purchased iron and steel metal is pressed, pounded or squeezed under great pressure into high strength parts known as forgings. The forging process is different from the casting and foundry processes, as metal used to make forged parts is never melted and poured.
Primary Metals Products Manufacturing	Establishments primarily engaged in manufacturing products such as fabricated wire products (except springs) made from purchased wire. These facilities also manufacture steel balls; nonferrous metal brads and

	nails; nonferrous metal spikes, staples, and tacks; and other primary metals products not elsewhere classified.
Valves and Pipe Fittings	Establishments primarily engaged in manufacturing metal valves and pipe fittings; flanges; unions, with the exception of purchased pipes; and other valves and pipe fittings not elsewhere classified.

SFW has read the Description of Source Categories Affected by This Subpart listed in Table 1 above. Based on these descriptions, SFW generally falls under the Industrial Machinery and Equipment Finishing Operations source category.

Table 2—to Subpart XXXXXX of Part 63—Applicability of General Provisions to Metal Fabrication or Finishing Area Sources

Instructions for Table 2 —As required in §63.11523, "General Provisions Requirements," you must meet each requirement in the following table that applies to you.

Citation	Subject
63.1[1]	Applicability.
63.2	Definitions.
63.3	Units and abbreviations.
63.4	Prohibited activities.
63.5	Construction/reconstruction.
63.6(a), (b)(1)–(b)(5), (c)(1), (c)(2), (c)(5), (g), (i), (j)	Compliance with standards and maintenance requirements.
63.9(a)–(d)	Notification requirements.
63.10(a), (b) except for (b)(2), (d)(1), (d)(4)	Recordkeeping and reporting.
63.12	State authority and delegations.
63.13	Addresses of State air pollution control agencies and EPA regional offices.
63.14	Incorporation by reference.
63.15	Availability of information and confidentiality.
63.16	Performance track provisions.

[1]§63.11514(g), "Am I subject to this subpart?" exempts affected sources from the obligation to obtain title V operating permits.

SFW acknowledges that it is subject to the above listed General Provisions Requirements as listed in 40 CFR Part 63 Supbart A.

APPENDIX E: WELDING ROD MSDS

A Subsidiary of The ESAB Group, Inc.

SAFETY DATA SHEET

Revised: January 9, 2012 Supersedes: December 20, 2011

Product Name: **ALUMINUM WELDING WIRE AND METALLIZING WIRE**
Emergency Phone: 1-717-637-8911 or 1-800-424-9300

1. CHEMICAL PRODUCT AND COMPANY IDENTIFICATION

Chemical Formula: Mixture.
Other Designations: AlcoTec ALMIGWELD (Aluminum spooled and drum packed electrode)
AlcoTec ALTIGWELD (Aluminum straight length welding rod)
Aluminum Metallizing Wire (coils and spools)
AlumaArc (Aluminum spooled electrode and straight length welding rod)
Manufacturer: AlcoTec Wire Corporation, 2750 Aero Park Drive, Traverse City, MI 49686-9263 USA
Product Use: Welding, Filler Metal, Metallizing, Brazing

2. HAZARDS INFORMATION

EMERGENCY OVERVIEW

Solid, silvery, odorless. Non-flammable as supplied. Small chips, fine turnings, and dust from processing may ignite readily.
Explosion/fire hazards may be present when (See Sections 5, 7 and 10 for additional information):

- Dust or fines are dispersed in the air.
- Fines or dust are in contact with other metal oxides (e.g., rust).
- Chips, fines, or dust are in contact with water.
- Molten aluminum is in contact with water/moisture or other metal oxides.

Dust or fume from welding can cause eye, skin, or upper respiratory tract irritation; metal fume fever; lung diseases, neurological effects and other systemic effects.

Potential Health Effects
EYES: Fume can cause irritation. Ultraviolet radiation from welding can cause flash burns.
SKIN: Can cause irritation. Ultraviolet radiation from welding can cause flash burns.
INHALATION: Can cause respiratory tract irritation, metal fume fever, and other health effects listed below:
Cancer hazard

Aluminum is welded in a protective, inert atmosphere such as argon or helium using the MIG or TIG process. Welding processes generate welding fumes and an intense ultraviolet radiation that results in the formation of ozone, and oxides of nitrogen. Ultraviolet radiation from welding can also cause flash burns to the eyes and skin.

- The International Agency for Research on Cancer has classified welding fumes as possibly carcinogenic to humans (Group 2B).
- Exposure to low levels of ozone can cause irritation of the eyes, nose, and throat. Inhalation can cause chest tightness, headache, shortness of breath, cough, wheeze, nausea, and narrowing of airways. Symptoms disappear when removed from exposure.
- Exposure to high levels of ozone may cause acute respiratory distress with shortness of breath, pulmonary changes, hemorrhage, and pulmonary edema (fluid in the lungs). Symptoms of pulmonary edema may be delayed for one or more hours. Exposure of test animals and human tissue to high concentrations has shown chromosomal changes, reproductive effects, blood changes, and death from lung congestion.
- Oxides of nitrogen can cause irritation of the eyes, skin (when moist), and respiratory tract. Exposure to high levels of nitrogen oxides can cause delayed pulmonary edema (fluid in the lungs) which may be fatal. Nitric oxide can cause formation of methemoglobin, which decreases the blood's ability to carry oxygen. Chronic overexposure can cause pulmonary fibrosis (scarring of the lungs).
- Overexposure to Aluminum dust/fines and fumes can cause reduced lung function and may be associated with neurological effects.

- Overexposure to magnesium oxide fumes can cause respiratory tract irritation and fever, chills, shortness of breath, and malaise (metal fume fever). Temporary symptoms can include fever, chills, nausea, vomiting, and muscular pain.
- Chronic exposure to inert dusts of silicon can cause increased airway resistance and contributes to chronic bronchitis. Intratracheal administration of silicon in rabbits produced significant pulmonary lesions.
- Exposure to zinc oxide fumes subsequent to burning, welding, and molten metal work can result in fever, chills, shortness of breath, and malaise (metal fume fever), and upper respiratory tract irritation. Temporary symptoms can include fever, chills, nausea, vomiting, and muscular pain. Exposure to dust or fines presents a low health risk by inhalation.
- Overexposure to manganese and manganese compounds above safe exposure limits can cause irreversible damage to the central nervous system, including the brain, symptoms of which may include slurred speech, lethargy, tremor, muscular weakness, psychological disturbances and spastic gait.
- Hexavalent chromium (Chrome VI) can cause asthma, kidney damage, primary irritant dermatitis, sensitization dermatitis, skin ulceration, and pulmonary edema (fluid in the lungs). Chronic inhalation or overexposure has been associated with lung, nasal, and gastrointestinal cancer. Hexavalent chromium is listed as carcinogenic to humans by IARC (Group 1)*. Chromium and some of its compounds are listed as carcinogenic by the NTP. Hexavalent chromium compounds may be generated during welding operations, with alloys containing chromium. A SIGNIFICANT AMOUNT OF THE CHROMIUM IN THE FUMES CAN BE HEXAVALENT CHROMIUM, WHICH HAS A VERY LOW EXPOSURE LIMIT, 0.005 mg/m^3 ($5\mu g/m^3$).
- The potential for overexposure to copper fume may exist when welding, flame cutting, etc. Overexposure to copper dust/mists can cause irritation of the eyes, skin, and upper respiratory tract. Chronic overexposure may result in blood disorders (anemia), and skin and hair discolorations. Overexposure to copper fume can result in respiratory tract irritation, nausea, and fever, chills, shortness of breath and malaise (metal fume fever).
- Nickel dust and fume can cause skin sensitization, allergic contact dermatitis, and conjunctivitis. Chronic inhalation of high levels of nickel can cause irritation of airways and lungs, lung fibrosis (scarring of the lungs), nasal septum perforation, nasal sinusitis, respiratory sensitization and asthma. Nickel compounds have been associated with cancer of lungs, larynx, and paranasal sinuses in humans. Nickel compounds are listed on the NTP and are listed as carcinogenic to humans by IARC (Group 1)*. Nickel metal is possibly carcinogenic to humans as defined by IARC (Group 2B)*.
- Beryllium can cause irritant dermatitis, allergic contact dermatitis, and skin granulomas. Inhalation of excessive levels of beryllium can result in acute pneumonitis (inflammation of the lung tissues).

  Beryllium can cause lung sensitization in susceptible individuals. Chronic inhalation of dust and fumes by these sensitized individuals can result in a serious, progressive disease called Chronic Beryllium Disease (CBD). This disease, often misdiagnosed as sarcoidosis, is an allergic condition in which the lung tissues become inflamed. This inflammation, sometimes accompanied with fibrosis (lung scarring), restricts the uptake of oxygen into the blood stream. CBD can, over time, be fatal.

  Inhalation of beryllium has produced lung tumors in animals. Beryllium is listed on the NTP and is known to be carcinogenic to humans by IARC (Group 1)*. *(See Section 8)*
- Lead inorganic dust and fume is listed as a possibly carcinogenic to humans by IARC Group 2B*. Overexposure to lead dust or fume can cause weakness of extremities (peripheral neuropathy), stomach disturbances, harm to the kidneys, liver, central nervous system, blood and blood forming tissues, and reproductive organs. Overexposure to lead has been associated with human reproductive effects (e.g. reduced fertility and damage to the fetus of exposed pregnant women). Lead is a cumulative toxic metal by inhalation or ingestion.
- Warning: This product contains or produces a chemical known to the State of California to cause cancer and birth defects (or other reproductive harm). (California Health & safety Code 25249.5 et seq.)

Medical conditions aggravated by exposure to the product:

Chronic lung disease, skin rashes, and asthma.

***IARC CLASSIFICATIONS**:

Group 1: The agent is carcinogenic to humans.

There is sufficient evidence that a casual relationship existed between exposure to the agent and human cancer.

Group 2B: The agent is possibly carcinogenic to humans.

Generally includes agents for which there is limited evidence in humans in the absence of sufficient evidence in experimental animals.

3. COMPOSITION INFORMATION ON INGREDIENTS

Alloy Ingredients: (% by weight shown as a maximum or a range, except for Aluminum, which is a minimum % by weight)

Alloy	Si	Fe	Cu	Mn	Mg	Cr	Ni	Zn	Zr	Ti	Others Each [1]	Others Total	Al
1100	0.95 =	Si+Fe	0.05-0.20	0.05	—	—	—	0.10	—	—	0.05	0.15	99.00
1350	0.10	0.40	0.05	0.01	—	0.01	—	0.05	—	—	0.03 [3]	0.10	99.50
1188	0.06	0.06	0.005	0.01	0.01	—	—	0.03	—	0.01	0.01 [4]	—	99.88
1199	0.006	0.006	0.006	0.002	0.006	—	—	0.006	—	0.002	0.002 [7]	—	99.99
2319	0.20	0.30	5.8-6.8	0.20-0.40	0.02	—	—	0.10	—	0.10-0.20	0.05 [5]	0.15	Rmnd [2]
4043	4.5-6.0	0.8	0.30	0.05	0.05	—	—	0.10	—	0.20	0.05	0.15	Rmnd [2]
4047 (718)	11.0-13.0	0.8	0.30	0.15	0.10	—	—	0.20	—	—	0.05	0.15	Rmnd [2]
4145 (716)	9.3-10.7	0.8	3.3-4.7	0.15	0.15	0.15	—	0.20	—	—	0.05	0.15	Rmnd [2]
4643	3.6-4.6	0.8	0.10	0.05	0.10-0.30	—	—	0.10	—	0.15	0.05	0.15	Rmnd [2]
5087	0.25	0.40	0.05	0.7-1.1	4.5-5.2	0.05-0.25	—	0.25	0.10-0.20	0.15	0.05	0.15	Rmnd [2]
5183	0.40	0.40	0.10	0.50-1.0	4.3-5.2	0.05-0.25	—	0.25	—	0.15	0.05	0.15	Rmnd [2]
5356	0.25	0.40	0.10	0.05-0.20	4.5-5.5	0.05-0.20	—	0.10	—	0.06-0.20	0.05	0.15	Rmnd [2]
5554	0.25	0.40	0.10	0.50-1.0	2.4-3.0	0.05-0.20	—	0.25	—	0.05-0.20	0.05	0.15	Rmnd [2]
5556	0.25	0.40	0.10	0.50-1.0	4.7-5.5	0.05-0.20	—	0.25	—	0.05-0.20	0.05	0.15	Rmnd [2]
5654	0.45 =	Si+Fe	0.05	0.01	3.1-3.9	0.15-0.35	—	0.20	—	0.05-0.15	0.05	0.15	Rmnd [2]
5754	0.40	0.40	0.10	0.50	2.6-3.6	0.30	—	0.20	—	0.15	0.05	0.15	Rmnd [2]
206.0	0.10	0.15	4.2-5.0	0.20-0.50	0.15-0.35	—	0.05	0.10	—	0.15-0.30	0.05 [6]	0.15	Rmnd [2]
C355.0 (4009)	4.5-5.5	0.20	1.0-1.5	0.10	0.40-0.6	—	—	0.10	—	0.20	0.05	0.15	Rmnd [2]
A356.0 (4008)	6.5-7.5	0.20	0.20	0.10	0.25-0.45	—	—	0.10	—	0.20	0.05	0.15	Rmnd [2]
357.0	6.5-7.5	0.15	0.05	0.03	0.45-0.6	—	—	0.05	—	0.20	0.05	0.15	Rmnd [2]

Notes:

[1] Beryllium shall not exceed 0.0003 percent.

[2] Rmnd = remainder.

[3] 1350 may contain Gallium, 0.03% (max.), Boron 0.05% (max.), and Vanadium plus Titanium, 0.02% (max.).

[4] 1188 may contain Gallium, 0.03% (max.), and Vanadium, 0.05% (max.).

[5] 2319 contains Vanadium, 0.05-0.15% and Zirconium, 0.10-0.25%.

[6] 206.0 may contain Tin, 0.05% (max.).

[7] 1199 may contain 0.005% each (max.) of Gallium and Vanadium.

4. FIRST AID MEASURES

EYES: Flush eyes with plenty of water or saline for at least 15 minutes. Consult a physician.

SKIN: Wash thoroughly with soap and water. Consult a physician if irritation persists.

INHALATION: Remove to fresh air. Check for clear airway, breathing, and presence of pulse. Provide CPR for persons without pulse or respirations. Consult a physician immediately.

5. FIRE FIGHTING MEASURES

FLAMMABLE PROPERTIES: Non-flammable as shipped. Small chips and dust from processing may ignite readily.

FIRE/EXPLOSION: May be a potential hazard under the following conditions:

- Dusts or fines dispersed in the air can be explosive.
- Chips, fines and dust in contact with water can generate flammable/explosive hydrogen gas. These gases could present an explosion hazard in confined or poorly ventilated spaces.
- Fines and dust in contact with certain metal oxides (e.g., rust). A thermite reaction, with considerable heat generation, can be initiated by a weak ignition source.
- Molten aluminum in contact with water/moisture or other metal oxides (e.g., rust). Moisture entrapped by molten aluminum can be explosive. Contact of molten aluminum with other metal oxides can initiate a thermite reaction.

EXTINGUISHING MEDIA: Use fire fighting methods and materials that are appropriate for surrounding fire. Use coarse water spray on chips or turnings. For fines, dust or molten aluminum, use Class D extinguishing agents.

DO NOT USE: Halogenated extinguishing agents on small chips/fines. Do not use water in fighting fires around molten aluminum.

FIRE FIGHTING INSTRUCTIONS: Fire fighters should wear NIOSH approved, positive pressure, self-contained breathing apparatus and full protective clothing when appropriate.

6. ACCIDENTAL RELEASE MEASURES

SMALL/LARGE SPILL: If molten: Contain the flow using dry sand or salt flux as a dam. Do not use shovels or hand tools to halt the flow of molten aluminum. Allow the spill to cool before remelting as scrap.

7. HANDLING AND STORAGE

Product should be kept dry. Avoid generating dust. Avoid contact with sharp edges or heated metal. Hot and cold aluminum are not visually different.

REQUIREMENTS FOR PROCESSES WHICH GENERATE DUSTS OR FINES

- If processing of these products includes operations where dust or extremely fine particulate is generated, obtain and follow the safety procedures and equipment guides contained in Aluminum Association Bulletin F1 and National Fire Protection Association (NFPA) brochures listed in Section 16. Use non-sparking handling equipment. Cover and reseal partially empty containers. Provide grounding and bonding where necessary to prevent accumulation of static charges during aluminum dust handling and transfer operations. (See Section15).
- Local ventilation and vacuum systems must be designed to handle explosive dusts. Dry vacuums and electrostatic precipitators must not be used. Dust collection systems must be dedicated to aluminum dust only and should be clearly labeled as such. Do not co-mingle fines of aluminum with fines of iron, iron oxide (rust) or other metal oxides.
- Do not allow chips, fines or dust to contact water, particularly in enclosed areas.
- Avoid all ignition sources. Good housekeeping practices must be maintained.

REQUIREMENTS FOR REMELTING OF ALUMINUM SCRAP MATERIAL AND/OR INGOT

- Molten aluminum and water can be an explosive combination. The risk is greatest when there is sufficient molten aluminum to entrap or seal off the water. Water and other forms of contamination on or contained in aluminum scrap or remelt ingot are known to have caused explosions in melting operations. While the products may have minimal surface roughness and internal voids, there remains the possibility of moisture contamination or entrapment. If confined, even a few drops of water can lead to violent explosions.

- All tooling and containers which come in contact with molten aluminum must be preheated or specially coated and rust free. Molds and ladles must be preheated or oiled before casting. Any surfaces that may contact molten aluminum (i.e., concrete) should be specially coated.
- Drops of molten aluminum in water (e.g. from plasma arc cutting), while not normally an explosion hazard, can generate enough flammable hydrogen gas to present an explosion hazard. Circulation of the water and removal of the aluminum particles minimize the hazards.

During melting operations, the following minimum guidelines should be observed:

- Inspect all aluminum materials before furnace charging and completely remove surface contamination such as water, ice, snow, deposits of grease and oil or other surface contamination resulting from weather exposure, shipment, or storage.
- Store materials in dry, heated areas with any cracks or cavities pointed downwards.
- Preheat and dry large or heavy items such as ingot adequately before charging into a furnace containing molten aluminum. This is typically done by use of a drying oven or homogenizing furnace. The drying cycle should bring the internal metal temperature of the coldest item of the batch to 400^{0}F and then hold at that temperature for 6 hours.

8. EXPOSURE CONTROLS/PERSONAL PROTECTION

ENGINEERING CONTROLS: Use with adequate explosion-proof ventilation to meet the limits listed in Section 2.

RESPIRATORY PROTECTION: Use NIOSH-approved respiratory protection [dust, fume, high efficiency dust/fume mask for lead, or other (organic vapor)] as specified by an Industrial Hygienist or other qualified professional if concentrations exceed the limits listed in Section 2.

EYE PROTECTION: Welders should use appropriate equipment (e.g. welder's helmet, face shield, filter lens) to prevent eye irritation or flash burns.

SKIN PROTECTION: Wear impervious gloves to avoid any skin injury.

- The presence of airborne beryllium has been detected during the welding of aluminum alloys with beryllium content at only 0.002% by weight. In accordance with OSHA 29 CFR 1910.252: Welding or cutting operations involving beryllium-containing base or filler metals shall be done using local exhaust ventilation and airline respirators unless atmospheric tests under the most adverse conditions have established that the workers' exposures is within the acceptable concentrations defined by 29 CFR 1910.1000. In all cases, workers in the immediate vicinity of the welding or cutting operations shall be protected as necessary by local exhaust ventilation or airline respirators.
- Good industrial hygiene practices, including reducing occupational exposures to as low as reasonably achievable, are recommended. Where employees are exposed to beryllium above the PEL or where excessive contamination of clothing with beryllium is possible, adequate protective clothing should be provided to prevent contamination of personal clothing. Personnel assigned to launder such clothing should be advised of beryllium's presence and potential health effects.
- Sampling to establish lead level exposure is advised where exposure to airborne particulate or fumes is possible. Consult OSHA Lead Standard 29 CFR 1910.1025 for specific health/industrial hygiene precautions and requirements to follow when handling lead compounds.

Revised: January 9, 2012 Supersedes: December 20, 2011

Product Name: **ALUMINUM WELDING WIRE AND METALLIZING WIRE**

EXPOSURE LIMITS:

			EXPOSURE LIMITS (TWA in mg/m^3 unless noted)	
Component	**CAS No.**	**Form**	**ACGIH TLV**	**OSHA PEL**
Aluminum	7429-90-5	Total dust, fume Respirable	 1	15 5
Beryllium and Beryllium Compounds	7440-41-7	All compounds as Be	0.00005	0.002, 0.005 Ceiling, 0.025 for 30 minutes
Chromium	7440-47-3	Metals Cr II compounds Cr III compounds, inorganic Cr VI compounds, water soluble Cr VI compounds, water insoluble	0.5 — 0.5 as Cr 0.05 as Cr 0.01 as Cr	1 0.5 as Cr 0.5 as Cr 0.005 as Cr VI 0.005 as Cr VI
Copper	7440-50-8	Fume Dust/mist	0.2 1	0.1 1
Gallium	7440-55-3		None	None
Iron	7439-89-6	Oxide dust & fume (as Fe)	5 (respirable)	10
Lead	7439-92-1	Elemental and inorganic compounds	0.05 as Pb	0.05 as Pb
Magnesium	7439-95-4	Oxide fume	10 (inhalable)	15 (total particulate)
Manganese	7439-96-5	Fume	0.2	5 (ceiling)
Nickel	7440-02-0	Metal Soluble inorganic compounds Insoluble inorganic compounds	1.5 as Ni 0.1 as Ni (inhalable) 0.2 as Ni (inhalable)	1 as Ni 1 as Ni 1 as Ni
Silicon	7440-21-3	Total dust Respirable	TLV withdrawn —	15 5
Titanium	7440-32-6	Oxide dust	10	15 (total particulate)
Vanadium	7440-62-2	Respirable dust Fume	0.05 as V_2O_5 (inhalable)	0.5 (ceiling) as V_2O_5 0.1 (ceiling) as V_2O_5
Zinc	7440-66-6	Oxide fume Total Oxide dust Respirable oxide dust	— — 2, 10 (STEL)	5 15 5
Zirconium	7440-67-7	Elemental	5, 10 (STEL)	5 (compounds only)

Revised: January 9, 2012 Supersedes: December 20, 2011

Product Name: **ALUMINUM WELDING WIRE AND METALLIZING WIRE**

Possible hazards during processing by welding, or arc spray metallizing

	ACGIH TLV	OSHA PEL
Ozone (light, heavy work)	0.1, 0.05 ppm	0.1 ppm
Nitric oxide	25 ppm	25 ppm
Nitrogen dioxide	3, 5ppm (STEL)	5 ppm (ceiling)

9. PHYSICAL AND CHEMICAL PROPERTIES

APPEARANCE:	Solid
BOILING POINT:	Not applicable
FREEZE-MELT POINT:	970°-1215°F (521°-657°C)
VAPOR PRESSURE (mm):	Not applicable
VAPOR DENSITY (air = 1):	Not applicable
SOLUBILITY IN WATER:	None
SPECIFIC GRAVITY:	Not determined
DENSITY:	Approximately 0.1 lb/in^3
pH:	Not applicable
ODOR:	None
ODOR THRESHOLD (ppm):	Not applicable
COEFFICIENT OF WATER/OIL DISTRIBUTION:	Not applicable

10. STABILITY AND REACTIVITY

Stable under normal conditions of use, storage, and transportation as shipped. Chips, fines, dust and molten aluminum are considerable more reactive with the following:

- **Water:** Slowly generates flammable/explosive hydrogen gas and heat. Generation rate is greatly increased with smaller particles (e.g., fines and dusts).
  Molten aluminum can react violently/explosively with water or moisture, particularly when the water is entrapped.
- **Heat:** Oxidizes at a rate dependent upon temperature and particle size.
- **Strong oxidizers:** Violent reaction with considerable heat generation.
  Can react explosively with nitrates (e.g., ammonium nitrate and fertilizers containing nitrate) when heated or molten.
- **Acids and alkalis:** Reacts to generate flammable/explosive hydrogen gas. Generation rate is greatly increased with smaller particles (e.g., fines and dusts).
- **Halogenated compounds:** Many halogenated hydrocarbons, including halogenated fire extinguishing agents, can react violently with finely divided aluminum.
- **Iron oxide (rust) and other metal oxides (e.g., copper and lead oxides):** A violent thermite reaction generating considerable heat can occur. Reaction with aluminum fines and dusts requires only very weak ignition sources for initiation.
  Molten aluminum can react violently without external ignition source.
- **Iron powder:** An explosive reaction forming hydrogen gas occurs when heated above 1470°F (600°C).

11. TOXICOLOGICAL INFORMATION

LD_{50} or LC_{LO} found for oral, dermal or inhalation routes of administration:

Nickel:	oral rat LD_{50}: 9000 mg/kg body weight
Silicon:	oral rat LD_{50}: 3160 mg/kg body weight
Manganese:	oral rat LD_{50}: 9000 mg/kg body weight
Iron:	intraperitoneal rabbit LD_{LO}: 20 mg/kg - no toxic effect noted

12. ECOLOGICAL INFORMATION

ECOTOXICOLOGICAL/CHEMICAL FATE INFORMATION: Not available.

13. DISPOSAL CONSIDERATION

Collect scrap for remelting and recycling. To maintain metal purity, it may be desirable to segregate this scrap from other alloys.

RCRA Status: Characterize in accordance with 40 CFR 261 or state equivalent.

14. TRANSPORT INFORMATION

USA DOT: Not Regulated - Enter the proper freight classification, "SDS Number," and "Product Name" on the shipping paperwork.

Canadian TDG Hazard Class & PIN: Not regulated.

15. REGULATORY INFORMATION

All electrical equipment must be suitable for use in hazardous atmospheres involving aluminum powder in accordance with 29 CFR 1910.307. The National Electrical Code, NFPA 70, contains guidelines for determining the type and design of equipment and installation, which will meet this requirement.

U.S. Federal Regulations

TSCA STATUS: All components of this product are listed on the TSCA inventory.

CERCLA HAZARDOUS SUBSTANCES: Beryllium, Chromium, Chromium compounds, Copper, Lead, Manganese, Nickel, Zinc.

SARA TITLE III:

Section 311/312 Physical and Health Hazard Categories: Immediate (acute), delayed (chronic) if particulates/fumes are generated during processing.

Section 313 Toxic Chemicals: Aluminum (fume/dust), Beryllium, Chromium, Copper, Lead, Manganese, Nickel, Vanadium (fume/dust), and Zinc (fume/dust).

State Regulations

PENNSYLVANIA "Special Hazardous Substance": Beryllium; Nickel; Chromium compounds, hexavalent.

International Regulations

CANADIAN DOMESTIC SUBSTANCES LIST: All components of this product are listed on the Canadian DSL.

EUROPEAN COMMUNITY: All components of this product are listed on ECOIN, the European Core Inventory.

16. OTHER INFORMATION

STATUS: Changes in Section 1.

PREPARED BY: Hazardous Materials Control Committee

- OSHA Standard 29 CFR 1910.1025 (Lead)
- OSHA Standard 29 CFR 1910.252
- ANSI 249.1, Safety in Welding and Cutting
- Aluminum Association's Bulletin F-1,"Guidelines for Handling Aluminum Fines Generated during Various Aluminum Fabricating Operations." The Aluminum Association, 900 19th Street, NW, Washington, DC 20006.
- NFPA 65, Standard for Processing and Finishing of Aluminum (NFPA phone: 800-344-3555)
- NFPA 70, Standard for National Electrical Code
- NFPA 77, Standard for Static Electricity
- Guide to Occupational Exposure Values-I 997, Compiled by the American Conference of Governmental Industrial Hygienists (ACGIH).
- Dept. of Health and Human Services, NIOSH: Registry of Toxic Effects of Chemical Substances, 1985-86 Edition
- Sax, N. Irving: Dangerous Properties of Industrial Materials, Van Nostrand Reinhold Co., Inc., 1984

Revised: January 9, 2012 Supersedes: December 20, 2011

Product Name: **ALUMINUM WELDING WIRE AND METALLIZING WIRE**

INFORMATION HEREIN IS GIVEN IN GOOD FAITH AS AUTHORITATIVE AND VALID; HOWEVER, NO WARRANTY, EXPRESS OR IMPLIED, CAN BE MADE.

LEGEND:

ACGIH	American Conference of Governmental Industrial Hygienists
AICS	Australian Inventory of Chemical Substances
CAS	Chemical Abstract Services
CERCLA	Comprehensive Environmental Response, Compensation, & Liability Act
CFR	Code of Federal Regulations
DOT	Department of Transportation
DSL	Domestic Substances List (Canada)
ECOIN	European Core Inventory
EPA	Environmental Protection Agency
IARC	International Agency for Research on Cancer
LC_{50}	Lethal Concentration (50 percent kill)
LC_{Lo}	Lowest published lethal concentration
LD_{50}	Lethal dose (50 percent kill)
LD_{Lo}	Lowest published lethal dose
MIG	Metal Inert Gas
NFPA	National Fire Protection Association
NIOSH	National Institute for Occupational Safety and Health
NTP	National Toxology Program
OSHA	Occupational Safety and Health Administration
PEL	Permissible Exposure Limit
PIN	Product Identification Number
RCA	Resource Conservation and Recovery Act
SARA	Superfund Amendments and Reauthorization Act
STEL	Short Term Exposure Limit
TCLP	Toxic Chemicals Leachate Program
TDG	Transportation of Dangerous Goods
TIG	Tungsten Inert Gas
TLV	Threshold Limit Value
TSCA	Toxic Substances Control Act
TWA	Time weighted Average

atm	atmosphere
cm	centimeter
g	gram
in	inch
kg	kilogram
lb.	pound
m	meter
mg	milligram
mm	millimeter
n.o.s.	not otherwise specified
ppb	parts per billion
ppm	parts per million
psia	pounds/square inch absolute
ug	microgram

Fabshield® 21B

AWS A5.20: E71T-11

WELDING POSITIONS:

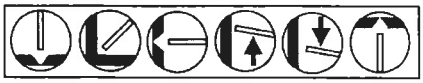

FEATURES:	BENEFITS:
• Excellent operator appeal	• Increases productivity
• Versatile	• Ideal for a variety of applications
• Self-shielded	• Suitable for welding outdoors
• Excellent bead appearance	• Helps to ensure weld integrity, reduces re-work
• Excellent slag removal	• Makes clean-up easy and quick

APPLICATIONS:

- General fabrication
- Pre-fab construction
- Short assembly welds
- Machine parts
- Non-alloyed and fine grain steels
- Rail car repairs
- Light structurals [under 3/4" (19.1mm) thick]
- Tanks

SLAG SYSTEM: Fast freezing, basic/fluoride type, flux-cored wire

SHIELDING GAS: None required

TYPE OF CURRENT: Direct Current Electrode Negative (DCEN)

STANDARD DIAMETERS: 0.035" (0.9 mm), 0.045" (1.2 mm), 1/16" (1.6 mm), 0.068 (1.7 mm), 5/64" (2.0 mm)

RE-DRYING: Not recommended

STORAGE: Product should be stored in a dry, enclosed environment, and in its original intact packaging

TYPICAL WELD METAL CHEMISTRY* (Chem Pad):

Weld Metal Analysis	Fabshield 21B	AWS Spec
Carbon (C)	0.28	0.30
Manganese (Mn)	0.34	1.75
Silicon (Si)	0.15	0.60
Phosphorus (P)	0.008	0.03
Sulphur (S)	0.003	0.03
Aluminum (Al)	1.72	1.80

Note: AWS specification single values are maximums.

TYPICAL MECHANICAL PROPERTIES* [AGED 48 HRS @200°F (93°C)]:

Mechanical Tests	Fabshield 21B	AWS Spec
Tensile Strength	91,000 psi (627 MPa)	70,000-95,000 psi (490-670 MPa)
Yield Strength	62,000 psi (427 MPa)	58,000 psi (390 MPa) Minimum
Elongation % in 2" (50mm)	22%	20% Minimum

TYPICAL CHARPY V-NOTCH IMPACT VALUES*: Not applicable

*The information contained or otherwise referenced herein is presented only as "typical" without guarantee or warranty, and Hobart Brothers Company expressly disclaims any liability incurred from any reliance thereon. Typical data are those obtained when welded and tested in accordance with AWS A5.20 specification. Other tests and procedures may produce different results. No data is to be construed as a recommendation for any welding condition or technique not controlled by Hobart Brothers Company.

Hobart Brothers Company • 101 Trade Square East • Troy, OH 45373
PH: (800) 424-1543 • FX: 800-541-6607 • www.hobartbrothers.com

Fabshield® 21B

Diameter Inches	(mm)	Weld Position	Amps	Volts	Wire-Feed Speed in/min	(m/min)	Deposition Rate lbs/hr	(kg/hr)	Contact Tip to Work Distance Inches	(mm)
0.035	(0.9)	All Position	55	17	75	(1.9)	1.8	(0.8)	1/2	(13)
0.035	(0.9)	All Position	80	19	110	(2.8)	2.1	(0.9)	1/2	(13)
0.035	(0.9)	All Position	120	20	160	(4.1)	2.5	(1.2)	1/2	(13)
0.045	(1.2)	All Position	115	15	105	(2.7)	1.4	(0.6)	1/2	(13)
0.045	(1.2)	All Position	130	16	125	(3.2)	1.8	(0.8)	1/2	(13)
0.045	(1.2)	All Position	160	17	170	(4.3)	2.8	(1.3)	1/2	(13)
0.045	(1.2)	All Position	200	18	195	(5.0)	3.5	(1.6)	1/2	(13)
1/16	(1.6)	All Position	160	17	70	(1.8)	2.1	(1.0)	3/4	(19)
1/16	(1.6)	All Position	190	18	100	(2.5)	3.2	(1.5)	3/4	(19)
1/16	(1.6)	Flat & Horizontal	210	19	110	(2.8)	3.4	(1.6)	3/4	(19)
1/16	(1.6)	Flat & Horizontal	260	20	145	(3.7)	4.8	(2.2)	3/4	(19)
0.068	(1.7)	All Position	145	22	159	(4.0)	1.9	(0.9)	3/4	(19)
0.068	(1.7)	All Position	155	18	60	(1.5)	2.3	(1.1)	3/4	(19)
0.068	(1.7)	All Position	185	17	70	(1.8)	2.7	(1.2)	3/4	(19)
0.068	(1.7)	All Position	240	18	100	(2.5)	4.2	(1.9)	3/4	(19)
0.068	(1.7)	Flat & Horizontal	255	21	111	(2.8)	5.2	(2.3)	3/4	(19)
0.068	(1.7)	Flat & Horizontal	315	18	49	(1.2)	7.4	(3.4)	3/4	(19)
5/64	(2.0)	All Position	185	16	55	(1.4)	2.6	(1.2)	1	(25)
5/64	(2.0)	All Position	190	18	60	(1.5)	2.8	(1.3)	1	(25)
5/64	(2.0)	All Position	220	19	70	(1.8)	3.5	(1.6)	1	(25)
5/64	(2.0)	Flat & Horizontal	265	21	90	(2.3)	4.7	(2.1)	1	(25)
5/64	(2.0)	Flat & Horizontal	315	22	124	(3.1)	7.1	(3.2)	1	(25)

- **Maintaining a proper welding procedure - including pre-heat and interpass temperatures - may be critical depending on the type and thickness of steel being welded.**
- **All position includes:** Flat, Horizontal, Vertical Up, Vertical Down, and Overhead.

STANDARD DIAMETERS AND PACKAGES: For a complete list of diameters and packaging, please contact Hobart Brothers at (800) 424-1543, or (937) 332-5188 for International Customer Service.

Diameter Inches	(mm)	10-lb. (4.5kg) Spool	33-lb. (15kg) Spool
0.035	(0.9)	S222108-022	S222108-029
0.045	(1.2)	S222112-022	S222112-029
1/16	(1.6)	S222119-022	S222119-029
0.068	(1.7)	—	S222123-029
5/64	(2.0)	—	S222125-029

CONFORMANCES AND APPROVALS:
- AWS A5.20, E71T-11
- AWS A5.20M, E491T-11
- ASME SFA 5.20, E71T-11
- ABS, E71T-11
- CWB, E491T-11-H8

CAUTION:
Consumers should be thoroughly familiar with the safety precautions on the warning label posted in each shipment and in the American National Standard Z49.1, "Safety in Welding and Cutting," published by the American Welding Society, 550 NW LeJune Road, Miami, FL 33126; OSHA Safety and Health Standards 29 CFR 1910 is available from the U.S. Department of Labor, Washington, D.C. 20210

Material Safety Data Sheets on any Hobart Brothers Company product may be obtained from Hobart Customer Service or at www.hobartbrothers.com.

Because Hobart Brothers Company is constantly improving products, Hobart reserves the right to change design and/or specifications without notice.

Fabshield is a registered trademark of Hobart Brothers Company, Troy, Ohio.

Revision Date: 110616 (Replaces 071126)
640-D, INDEX

HOBART
HOBART BROTHERS

HOBART BROTHERS

C

MATERIAL SAFETY DATA SHEET

This Material Safety Data Sheet (MSDS) is for U.S. manufactured or distributed welding consumables and related products and may be used to comply with OSHA's Hazard Communication standard, 29 CFR 1910.1200, and Superfund Amendments and Reauthorization Act (SARA) of 1986 Public Law 99-499. The OSHA standard must be consulted for specific requirements. This Safety Data Sheet complies with European Commission Directive 89/106/EEC, 91/155/EEC, ISO 11014-1 and ANSI Z400.1. This document is translated in several languages and available on our website at www.hobartbrothers.com, from your sales representative or by calling customer service at 1 (937) 332-4000.

SECTION 1 – IDENTIFICATION

Manufacturer Name: HOBART BROTHERS COMPANY
Address: 101 TRADE SQUARE EAST, TROY, OH 45373
Website: www.hobartbrothers.com
Telephone No: 1 (937) 332-4000
Emergency No: 1 (800) 424-9300

Products Type: TUBULAR ARC WELDING ELECTRODES FOR FLUX CORED, METAL CORED AND COMPOSITE SUBMERGED ARC WELDING

GROUP A: Product For: Gas Shielded Carbon and Low Alloy Steel
Trade Name: **ECLIPSE** RXR-XLS, **ULTIMET** 716; **EXCEL-ARC** 71; **FABCO** 82HD, 85, 90, HORNET, RXR, RXR-XLS, TR70, XL-71; **FABCOR** 80XLS, **86R**, 96, 702; **FABDUAL** T9M, **T91M**; **FLUX-COR** 2, 7, 37, 80A1; **GALVACOR**; **HOBART** E71T-GS; **METAL-COR** 6, 6L, 80D2, EN-VISION; **METALLOY** 70, **70R**, 70X, 71, 76, 80D2, EM12K-S, **EM13K-S**, X-CEL; **SPEED-ALLOY** 70, 71, 71A, **71-V**, 719, 75, 105D2; **SPEED-COR** 6; **SUPER-COR**; **TM** 11, 22, 37, 55, 72, 73, **81A1**, 95D2, 105D2, 711M, 791, 811A1, **RX7**; **TRIPLE-7**, 8; **VERSATILE**; **VERTI-COR** I, II, **III**; **VISION** AP70, HiDep 70, MetCOR 70

GROUP B: Product For: Self-Shielded Carbon Steel
Trade Name: **FABSHIELD** 4, **21B**, 23, 55, 7027; **SELF-SHIELD** 4, 11, 11GS; **SPEED-SHIELD** 11, GS; **TM** 44, 121, 123

GROUP C: Product For: Carbon and Low Alloy Steel
Trade Name: **FABCO** 81K2-C, 91K2-C, **107G**, 110, 110K3-M, 115, 712M, **750M**, 803; **FABCO XTREME** 120, B2, B3, B3V; **FABCOR** EDGE, EDGE MC, **209**, 1100; **FABSHIELD** 3Ni1, 71K6, 79T8, **79T8**-Ni2, **81N1**, **81N1+**, **81N2**, K54, **XLNT**-6, XLR-8, X80, OFFSHORE 71Ni; **FLUX-COR** 90K2; **FORMULA** XL8Ni1, **XL8**Ni1-C, XL525, XL550; **MATRIX**; **METAL-COR** MAXIM; **METALLOY** 71 **SG**, 80B2, 80N1, 80N2, 90, 90B3, 100, 110, 120-S, B2-S, B3-S, F2-S, N1-S, N2-S, VANTAGE, VANTAGE CVN, VANTAGE D2, VANTAGE Ni1, W-S; **MX2**; **PREMIER** 70; **PW-201**; **SPEED-ALLOY** 81Ni1-V, 81Ni2-V, 85, 91B3, 111-V, 115, 125, 712, 712M, 790; **TM** 81B2, 81N1, 81N2, 81W, 91B3, 91K2, 91N2, 95K2, 101K3, 111K3, 115, 125K4, 770, 771, 71HYN, 811B2, 811N1, 811N2, 811N3, 811W, 881K2, 910, 911B3, 911N2, 991K2, 101, 101K3-C, 1101K3-M; **VERTI-COR** 70, 72, 81Ni2, 91B3, 91K2, 91Ni2, IINi1

GROUP D: Product For: Corrosion Resisting Steel
Trade Name: **FABCOR** 409; **FABLOY** 409, 439; **FABTUF** 960; **METAL-COR** 409, 409Cb, 439; **METALLOY** 18CrCb, 409, 439; **POWERCORE** 91; **SPEED-ALLOY** 5055; **TM** B6, B9

SECTION 2 – IDENTIFICATION OF HAZARDS

IMPORTANT - This section covers the hazardous materials from which this product is manufactured. The fumes and gases produced during welding with normal use of this product are also addressed in Section 8. The term "hazardous" in this section should be interpreted as a term required and defined in OSHA Hazard Communication Standard (29 CFR Part 1910.1200).

HAZARDOUS INGREDIENT	CAS	EINECS[Γ]	REGULATORY HAZARD CLASSIFICATION/DESIGNATION 67/548/EEC[Δ]	IARC[Ε]	NTP[Ζ]	OSHA[Η]	65[Θ]
ALUMINUM	7429-90-5	231-072-3	F - R10, R15, R17	---	---	---	---
ANTIMONY TRIOXIDE	1309-64-4	215-175-0	Carc 3[Φ] - R40	2B	---	---	X
BARIUM FLOURIDE	7787-32-8	232-108-0	None	---	---	---	---
CALCIUM CARBONATE	1317-65-3	215-279-6	None	---	---	---	---
CERIUM OXIDE	1306-38-3	215-150-4	None	---	---	---	---
CHROMIUM	7440-47-3	231-157-5	O - R9; Carc 1[Φ] - R45; Muta 2 - R46; Repr 3 - R62; T+ - R26; T - R24/25, R48/23; C - R35, R42/43; N - R50, R53[ΣΣΣ]	1[ΣΣ], 3[Σ]	K[ΣΣ]	X[ΣΣ]	X[ΣΣ]
COBALT	7440-48-4	231-158-0	Xn; R42/43, R53	2B	---	X	X
COPPER	7440-50-8	231-159-6	None	---	---	---	---
FLUORSPAR	7789-75-5	232-188-7	None	---	---	---	---
IRON	7439-89-6	231-096-4	None	---	---	---	---
IRON OXIDE	1309-37-1	215-168-2	None	3	---	---	---
LITHIUM CARBONATE	554-13-2	209-062-5	F - R14/15; C - R34[T]	---	---	---	---
LITHIUM FLUORIDE	7789-24-4	232-152-0	F - R14/15; C - R34[T]	---	---	---	---
LITHIUM OXIDE	12057-24-8	235-019-5	F - R14/15; C - R34[T]	---	---	---	---
MAGNESIUM	7439-95-4	231-104-6	F - R11, R15, R17	---	---	---	---
MAGNESIUM OXIDE	1309-48-4	215-171-9	None	---	---	---	---
MANGANESE	7439-96-5	231-105-1	Xn - R20/22[Y]	---	---	---	---
MOLYBDENUM	7439-98-7	231-107-2	Xn - R48/20/22; Xi - R36/37[X]	---	---	---	---
NICKEL	7440-02-0	231-111-4	Carc 3[Φ] - R40; T - R43, R48/23	1	K	X	X
SILICA (Amorphous Silica Fume)	14808-60-7 69012-64-2	238-878-4 273-761-5	Xn - R48/20, R40/20 None	1[Ψ] 3	K K	X ---	X X
SILICON	7440-21-3	231-130-8	None	---	---	---	---
STRONTIUM FLUORIDE	7783-48-4	232-000-3	None	---	---	---	---
TITANIUM	7440-32-6	231-142-3	None	---	---	---	---
TITANIUM DIOXIDE	13463-67-7	236-675-5	None	2B	---	---	X

Γ – European INventory of Existing Chemical Substances Number Δ - European Union Directive 67/548/EEC – Annex 1 Ε – International Agency for Research on Cancer (1 – Human Carcinogen, 2A – Probably Carcinogenic to Humans, 2B – Possibly Carcinogenic to Humans, 3 – Unclassifiable as to Carcinogenicity in Humans, 4 Probably Not Carcinogenic to Humans) Ζ – US National Toxicology Program (K – Known Carcinogen, S – Suspected Carcinogen) Η – OSHA Known Carcinogen List Θ – California Proposition 65 (X – On Proposition 65 list) --- Dashes indicate the ingredient is not listed with the IARC, NTP, OSHA or 65 Φ – Carcinogen, Mutagen or Reproductive Category per European Council Directive 67/548/EEC Annex I Σ – Metal and Chromium III Compounds ΣΣ – Chromium VI Compounds ΣΣΣ – Chromium (VI) Trioxide EU 67/548/EEC Classification/Designation Y – Manganese Dioxide EU 67/548/EEC Classification/Designation X – Molybdenum Trioxide EU 67/548/EEC Classification/Designation T – Lithium EU 67/548/EEC Classification/Designation Ψ – Silica Crystalline α-Quartz

The following symbols correspond with the EU 67/548/EEC column above are in European Union Directive 67/548/EEC Annex 1 and EC 1272/2008 Annex VI – Table 3.2:

F – Flammable

Xn – Harmful

Xi – Irritant

O - Oxidizer

C – Corrosive

N – Dangerous for the Environment

T – Toxic

T+ - Extremely Toxic

WARNING! - Avoid breathing welding fumes and gases, they may be dangerous to your health. Always use adequate ventilation. Always use appropriate personal protective equipment.

PRIMARY ROUTES OF ENTRY: Respiratory System, Eyes and/or Skin.
ELECTRIC SHOCK: Arc welding and associated processes can kill. See Section 8.
ARC RAYS: The welding arc can injure eyes and burn skin.
FUMES AND GASES: Can be dangerous to your health.

Welding fumes and gases cannot be classified simply. The composition and quantity of both are dependent upon the metal being welded, the process, procedures and electrodes used. Most fume ingredients are present as complex oxides and compounds and not as pure metals. When the electrode is consumed, the fume and gas decomposition products generated are different in percent and form from the ingredients listed in Section 3. Decomposition products of normal operation include those originating from the volatilization,

reaction or oxidation of the materials shown in this section, plus those from the base metal and coating, etc., as noted above. Monitor for the materials identified in the list within this section.

Fumes from the use of this product may contain complex oxides or compounds of the following elements and molecules: amorphous silica fume, antimony trioxide, barium, calcium oxide, chromium, cobalt, copper, fluorspar or fluorides, lithium, manganese, nickel, silica and strontium. Other reasonably expected constituents of the fume would also include complex oxides of iron, titanium, silicon and molybdenum. Gaseous reaction products may include carbon monoxide and carbon dioxide. Ozone and nitrogen oxides may be formed by the radiation from the arc. Other conditions which also influence the composition and quantity of the fumes and gases to which workers may be exposed include: coatings on the metal being welded (such as paint, plating or galvanizing), the number of welders and the volume of the work area, the quality and amount of ventilation, the position of the welder's head with respect to the fume plume, as well as the presence of contaminants in the atmosphere (such as chlorinated hydrocarbon vapors from cleaning and degreasing activities). One recommended way to determine the composition and quantity of fumes and gases to which workers are exposed is to take an air sample inside the welder's helmet if worn or in the worker's breathing zone. See ANSI/AWS F1.1, available from the "American Welding Society", P.O. Box 351040, Miami, FL 33135. Also, from AWS is F1.3 "Evaluating Contaminants in the Welding Environment - A Sampling Strategy Guide", which gives additional advice on sampling.

SECTION 3 – HAZARDOUS INGREDIENTS

CONTENT PERCENTAGE BY INGREDIENTS

INGREDIENT	CAS	EINECS	GROUP AND %WEIGHT A	B	C	D
ALUMINUM	7429-90-5	231-072-3	<2	<5	<3(6)	---
ANTIMONY TRIOXIDE	1309-64-4	215-175-0	---	---	<1(12)	---
BARIUM FLOURIDE	7787-32-8	232-108-0	---	<12(1)	<12(3)	---
CALCIUM CARBONATE	1317-65-3	215-279-6	<2	<2(7)	---	---
CERIUM OXIDE	1306-38-3	215-150-4	---	---	<2(11)	---
CHROMIUM	7440-47-3	231-157-5	---	---	<3	5-20
COBALT	7440-48-4	231-158-0	---	---	<1(10)	---
COPPER	7440-50-8	231-159-6	<1(2)	---	<2(2)	---
FLUORSPAR	7789-75-5	232-188-7	<5(5)	<10	<5	---
IRON	7439-89-6	231-096-4	75-98	75-95	75-98	75-95
IRON OXIDE	1309-37-1	215-168-2	---	---	<12	---
LITHIUM CARBONATE	554-13-2	209-062-5	---	---	<2	---
LITHIUM FLUORIDE	7789-24-4	232-152-0	---	<2(9)	<2(9)	---

INGREDIENT	CAS	EINECS	GROUP AND %WEIGHT A	B	C	D
LITHIUM OXIDE	12057-24-8	235-019-5	---	---	<2	---
MAGNESIUM	7439-95-4	231-104-6	---	<3	<2	---
MAGNESIUM OXIDE	1309-48-4	215-171-9	---	<3	<2	---
MANGANESE	7439-96-5	231-105-1	<5	<2	<4	<2
MOLYBDENUM	7439-98-7	231-107-2	<1	---	<2	<2
NICKEL	7440-02-0	231-111-4	---	---	<4	<1
SILICA (Amorphous Silica Fume)	14808-60-7 / 69012-64-2	238-878-4 / 273-761-5	<2	<2	<2	---
SILICON	7440-21-3	231-130-8	<4	<2(4)	<4	<2
STRONTIUM FLUORIDE	7783-48-4	232-000-3	---	<2(8)	---	---
TITANIUM	7440-32-6	231-142-3	---	<2	<2	<2
TITANIUM DIOXIDE	13463-67-7	236-675-5	<10	<4(4)	<10	<2

--- Dashes indicate the ingredient is not present within the group of products (1) Present only in FABSHIELD 21B, 23; TM 121, 123; SELF-SHIELD 11, 11GS (2) Present only in FABCO 110K3-M; GALVACOR; METALLOY WS; TM-81W, 811W (3) Present only in FABCO XTREME 120, B2, B3; FABSHIELD 3Ni1, 71K6, 79T8, 81N1, 81N1+, 81N2, XLNT-6; FABSHIELD OFFSHORE 71Ni (4) Present only in FABSHIELD 55 (5) Present only in METALLLOY EM13K-S; SPEED-ALLOY 105D2; TM 55, 75A1, 95D2, 105D2 (6) Present only in FABCO XTREME 120, B2, B3; FABSHIELD 3Ni1, 71K6, 79T8, 81N1, 81N1+, 81N2, XLNT-6; FABSHIELD OFFSHORE 71Ni (7) Present only in FABSHIELD 7027 (8) Present only in FABSHIELD 21B; TM 121 (9) Present only in FABCO 750M; FABSHIELD 7027 (10) Present only in FABSHIELD 71K6, 81N1, 81N2 (11) Present only in FABSHIELD 79T8, 81N1+, XLNT-6; FABSHIELD OFFSHORE 71Ni; (12) Present only in MATRIX; METAL-COR MAXIM; METALLOY VANTAGE, VANTAGE CVN, VANTAGE D2, VANTAGE Ni1

SECTION 4 – FIRST AID MEASURES

INHALATION: If breathing is difficult provide fresh air and contact physician. **EYE/SKIN INJURIES:** For radiation burns, see physician.
Section 11 of this MSDS covers the acute effects of overexposure to the various ingredients within the welding consumable. Section 8 of this MSDS lists the exposure limits and covers methods for protecting yourself and your co-workers.

SECTION 5 - FIRE AND EXPLOSION HAZARD DATA

Welding consumables applicable to this sheet as shipped are nonreactive, nonflammable, nonexplosive and essentially nonhazardous until welded. Welding arcs and sparks can ignite combustibles and flammable products. Unused welding consumables may remain hot for a period of time after completion of a welding process. See American National Standard (ANSI) Z49.1 for further general safety information on the use and handling of welding consumables and associated procedures.

SECTION 6 - ACCIDENTAL RELEASE MEASURES

Solid objects can be picked up and placed into a container. Wear proper personal protective equipment while handling. Do not discard as general trash.

SECTION 7 - HANDLING AND STORAGE

HANDLING: No specific requirements in the form supplied. Handle with care to avoid cuts. Wear gloves when handling welding consumables. Avoid exposure to dust. Do not ingest. Some individuals can develop an allergic reaction to certain materials. Retain all warning and product labels.
STORAGE: Keep separate from acids and strong bases to prevent possible chemical reactions.

SECTION 8 - EXPOSURE CONTROL AND PERSONAL PROTECTION

Read and understand the instructions and the labels on the packaging. Welding fumes do not have a specific OSHA PEL or ACGIH TLV. The OSHA PEL for Particulate – Not Otherwise Classified (PNOC) is 5 mg/m^3 – Respirable Fraction, 15 mg/m^3 – Total Dust. The ACGIH TLV for Particles – Not Otherwise Specified (PNOS) is 3 mg/m^3 – Respirable Particles, 10 mg/m^3 – Inhalable Particles. The individual complex compounds within the fume may have a lower OSHA PEL or ACGIH TLV than the OSHA Particulate – Not Otherwise Classified (PNOC) and ACGIH Particles – Not Otherwise Specified (PNOS). An Industrial Hygienist, the OSHA Permissible Exposure Limits for Air Contaminants (29 CFR 1910.1000), and the ACGIH Threshold Limit Values should be consulted to determine the specific fume constituents present and their respective exposure limits. European Union Occupational Exposure Limits (EU OEL) are listed with the most stringent limit among the EU member nations. All exposure limits are in milligrams per cubic meter (mg/m^3).

INGREDIENT	CAS	EINECS	OSHA PEL	ACGIH TLV	EU OEL
ALUMINUM###	7429-90-5	231-072-3	5 R* (Dust)	1 R* {A4}	4 I*; 1.5 R* - Germany
ANTIMONY TRIOXIDE	1309-64-4	215-175-0	0.5 (as Sb)	0.5 (as Sb) {A2}	0.1 I*; 0.4*** - Hungary
					0.1 I* (Aerosol); 0.4*** (Aerosol) - Austria
BARIUM FLOURIDE#	7787-32-8	232-108-0	0.5 (as Ba)	0.5 (as Ba) {A4}	0.5 I* (Aerosol as Ba), 4*** (Aerosol as Ba) - Germany
CALCIUM CARBONATE	1317-65-3	215-279-6	5 R*, 5 (as CaO)	3 R*, 2 (as CaO)	10 I* (Aerosol) – UK; 3 R* (Aerosol) - Switzerland
CERIUM OXIDE	1306-38-3	215-150-4	5 R* (Dust), 15 (Dust)	3 R* (Dust), 10 (Dust)	4 I*; 1.5 R* (as Dust - NOS) - Germany
CHROMIUM#	7440-47-3	231-157-5	1 (Metal)	0.5 (Metal) {A4}	0.1 I* (Aerosol) - Switzerland
			0.5 (Cr II & Cr III Cpnds)	0.5 (Cr III Cpnds) {A4}	0.005; 0.01*** - Denmark
			0.005 (Cr VI Cpnds)	0.05 (Cr VI Sol Cpnds) {A1}	0.005 (Total Aerosol); 0.015***(Total Aerosol) - Sweden
				0.01 (Cr VI Insol Cpnds) {A1}	
COBALT	7440-48-4	231-158-0	0.1 (Dust and Fume)	0.02 {A3}	0.01 I*; 0.02*** - Denmark
COPPER	7440-50-8	231-159-6	0.1 (Fume), 1 (Dust)	0.2 (Fume), 1 (Dust)	0.1 I* (Aerosol); 0.2 I*** (Aerosol) - Germany
					0.1; 0.2*** - Denmark
FLUORSPAR	7789-75-5	232-188-7	2.5 (as F)	2.5 (as F) {A4}	1 I* (Aerosol as F); 4*** (Aerosol as F) - Germany
IRON+	7439-89-6	231-096-4	5 R*	5 R* (Fe_2O_3) {A4}	3 R* (Aerosol as Fe_2O_3) – Switzerland
					7*** (as Fe_2O_3) - Denmark
IRON OXIDE	1309-37-1	215-168-2	10 (Oxide Fume)	5 R* (Fe_2O_3) {A4}	3 R* (Aerosol as Fe_2O_3) – Switzerland
					7*** (as Fe_2O_3) - Denmark
LITHIUM CARBONATE	554-13-2	209-062-5	5 R* (Dust), 15 (Dust)	3 R* (Dust), 10 (Dust)	4 I*; 1.5 R* (as Dust - NOS) - Germany
LITHIUM FLUORIDE	7789-24-4	232-152-0	2.5 (as F)	2.5 (as F) {A4}	2.5 - UK
LITHIUM OXIDE	12057-24-8	235-019-5	1 ■ ■	3 R* (Dust), 10 (Dust)	4 I*; 1.5 R* (as Dust - NOS) - Germany
MAGNESIUM+	7439-95-4	231-104-6	5 R*	3 R*	3 R* (Aerosol) - Switzerland
					4 I*(Aerosol); 1.5 R*** (Aerosol) - Germany
MAGNESIUM OXIDE	1309-48-4	215-171-9	15 (Fume, Total Part)	10 I* {A4}	3 R* (Aerosol as Mg) – Switzerland

MANGANESE#	7439-96-5	231-105-1	5 CL ** (Fume) 1, 3 STEL*** ■	0.2 I* {A4} ♦ 0.02 R* ♦, ♦♦	4 I*(Aerosol as Mg); 1.5 R*** (Aerosol as Mg) - Germany 0.02 R*(Aerosol); 0.16 R*** (Aerosol) - Germany 0.2 I*(Aerosol) - Germany 0.2; 0.4*** - Denmark
MOLYBDENUM	7439-98-7	231-107-2	5 R*	3 R*; 10 I* (Ele and Insol) 0.5 R* (Sol Cpnds) {A3}	3 R* - Spain; 4; 10*** - Poland
NICKEL#	7440-02-0	231-111-4	1 (Metal) 1 (Sol Cpnds) 1 (Insol Cpnds)	1.5 I* (Ele) {A5} 0.1 I* (Sol Cpnds) {A4} 0.2 I* (Insol Cpnds) {A1}	0.05; 0.1*** - Denmark
SILICA++	14808-60-7	238-878-4	0.1 R*	0.025 R* {A2}	0.1 (Fused, Respirable Dust) - Denmark 0.2*** (Fused, Respirable Dust) - Denmark
(Amorphous Silica Fume)	69012-64-2	273-761-5	0.8	3 R*	2 I*; 4 I*** - Denmark
SILICON+	7440-21-3	231-130-8	5 R*	3 R*	4 R* (Aerosol); 10 I* (Aerosol) - Denmark
STRONTIUM FLUORIDE	7783-48-4	232-000-3	2.5 (as F)	2.5 (as F) {A4}	1 I* (Aerosol as F); 4*** (Aerosol as F) - Germany
TITANIUM+	7440-32-6	231-142-3	5 R*	3 R*	1.5 R* (as TiO_2) - Germany
TITANIUM DIOXIDE	13463-67-7	236-675-5	15 (Dust)	10 {A4}	1.5 R* - Germany

R* - Respirable Fraction R*** - Respirable Fraction - Short Term Exposure Limit I* - Inhalable Fraction I*** - Inhalable Fraction - Short Term Exposure Limit ** - Ceiling Limit *** - Short Term Exposure Limit + - As a nuisance particulate covered under "Particulates Not Otherwise Regulated" by OSHA or "Particulates Not Otherwise Classified" by ACGIH ++ - Crystalline silica is bound within the product as it exists in the package. However, research indicates silica is present in welding fume in the amorphous (noncrystalline) form #- Reportable material under Section 313 of SARA ### - Reportable material under Section 313 of SARA as dust or fume ■ - NIOSH REL TWA and STEL ■ ■ - AIHA Ceiling Limit of 1 mg/m^3 ♦ - Listed under ACGIH Notice of Intended Changes for Mn in 2010 ♦♦ - Limit of 0.02 mg/m^3 is proposed for Respirable Mn in 2011 by ACGIH Ele – Element Sol – Soluble Insol – Insoluble Inorg – Inorganic Cpnds – Compounds NOS – Not Otherwise Specified {A1} - Confirmed Human Carcinogen per ACGIH {A2} - Suspected Human Carcinogen per ACGIH {A3} - Confirmed Animal Carcinogen with Unknown Relevance to Humans per ACGIH {A4} - Not Classifiable as a Human Carcinogen per ACGIH {A5} - Not Suspected as a Human Carcinogen per ACGIH (noncrystalline) form

VENTILATION: Use enough ventilation, local exhaust at the arc or both to keep the fumes and gases below the PEL/TLV/OELs in the worker's breathing zone and the general area. Train the welder to keep his head out of the fumes.
RESPIRATORY PROTECTION: Use NIOSH approved or equivalent fume respirator or air supplied respirator when welding in confined space or where local exhaust or ventilation does not keep exposure below the regulatory limits.
EYE PROTECTION: Wear helmet or use face shield with filter lens. As a rule of thumb begin with Shade Number 14. Adjust if needed by selecting the next lighter and/or darker shade number. Provide protective screens and flash goggles, if necessary, to shield others from the weld arc flash.
PROTECTIVE CLOTHING: Wear hand, head and body protection which help to prevent injury from radiation, sparks and electrical shock. See ANSI Z49.1. At a minimum this includes welder's gloves and a protective face shield, and may include arm protectors, aprons, hats, shoulder protection as well as dark nonsynthetic clothing. Train the welder not to touch live electrical parts and to insulate himself from work and ground.
PROCEDURE FOR CLEANUP OF SPILLS OR LEAKS: Not applicable
SPECIAL PRECAUTIONS (IMPORTANT): Maintain exposure below the PEL/TLV/OEL. Use industrial hygiene monitoring to ensure that your use of this material does not create exposures which exceed PEL/TLV/OEL. Always use exhaust ventilation. Refer to the following sources for important additional information: American National Standard (ANSI) Z49.1; Safety in Welding and Cutting published by the American Welding Society, P.O. Box 351040, Miami, FL 33135 and OSHA Publication 2206 (29 CFR 1910), U.S. Government Printing Office, Washington, DC 20402.

SECTION 9 – PHYSICAL AND CHEMCIAL PROPERTIES

Welding consumables applicable to this sheet as shipped are nonreactive, nonflammable, nonexplosive and essentially nonhazardous until welded.
PHYSICAL STATE: Cored Wire
ODOR: N/A
COLOR: Gray
FORM: Round Wire

SECTION 10 – STABILITY AND REACTIVITY

GENERAL: Welding consumables applicable to this sheet are solid and nonvolatile as shipped. This product is only intended for use per the welding parameters it was designed for. When this product is used for welding, hazardous fumes may be created. Other factors to consider include the base metal, base metal preparation and base metal coatings. All of these factors can contribute to the fume and gases generated during welding. The amount of fume varies with the welding parameters.
STABILITY: This product is stable under normal conditions.
REACTIVITY: Contact with acids or strong bases may cause generation of gas.

SECTION 11 – TOXICOLOGICAL INFORMATION

SHORT-TERM (ACUTE) OVEREXPOSURE EFFECTS: Welding Fumes - May result in discomfort such as dizziness, nausea or dryness or irritation of nose, throat or eyes. **Aluminum Oxide** - Irritation of the respiratory system. **Antimony Compounds** - Irritation of nose, throat, eyes and skin. **Barium** - Aching eyes, rhinitis, frontal headache, wheezing, laryngeal spasms, salivation or anorexia. **Calcium Oxide** - Dust or fumes may cause irritation of the respiratory system, skin and eyes. **Chromium** - Inhalation of fume with chromium (VI) compounds can cause irritation of the respiratory tract, lung damage and asthma-like symptoms. Swallowing chromium (VI) salts can cause severe injury or death. Dust on skin can form ulcers. Eyes may be burned by chromium (VI) compounds. Allergic reactions may occur in some people. **Cobalt** - Pulmonary irritation, cough, dermatitis, weight loss. **Copper** - Metal fume fever characterized by metallic taste, tightness of chest and fever. Symptoms may last 24 to 48 hours following overexposure. **Fluorides** - Fluoride compounds evolved may cause skin and eye burns, pulmonary edema and bronchitis. **Iron, Iron Oxide** - None are known. Treat as nuisance dust or fume. **Lithium Compounds** - Overexposure may cause tremor and nausea. **Magnesium, Magnesium Oxide** - Overexposure to the oxide may cause metal fume fever characterized by metallic taste, tightness of chest and fever. Symptoms may last 24 to 48 hours following overexposure. **Manganese** - Metal fume fever characterized by chills, fever, upset stomach, vomiting, irritation of the throat and aching of body. Recovery is generally complete within 48 hours of the overexposure. **Molybdenum, Cerium Oxide** - Irritation of the eyes, nose and throat. **Nickel, Nickel Compounds** - Metallic taste, nausea, tightness in chest, metal fume fever, allergic reaction. **Silica (Amorphous)** - Dust and fumes may cause irritation of the respiratory system, skin and eyes. **Strontium Compounds** - Strontium salts are generally non-toxic and are normally present in the human body. In large oral doses, they may cause gastrointestinal disorders, vomiting and diarrhea. **Titanium Dioxide** - Irritation of respiratory system.
LONG-TERM (CHRONIC) OVEREXPOSURE EFFECTS: Welding Fumes - Excess levels may cause bronchial asthma, lung fibrosis, pneumoconiosis or "siderosis." **Aluminum Oxide** - Pulmonary fibrosis and emphysema. **Antimony Compounds** - Metal fume fever, dermatitis, keratitis, conjunctivitis and ulceration and perforation of the nasal septum. Avoid conditions in which fresh hydrogen will react with antimony to form stibine which is extremely toxic. **Barium** - Long term overexposure to soluble barium compounds may cause nervous disorders and may have deleterious effects on the heart, circulatory system and musculature. **Calcium Oxide** - Prolonged overexposure may cause ulceration of the skin and perforation of the nasal septum, dermatitis and pneumonia. **Chromium** - Ulceration and perforation of nasal septum. Respiratory irritation may occur with symptoms resembling asthma. Studies have shown that chromate production workers exposed to hexavalent chromium compounds have an excess of lung cancers. Chromium (VI) compounds are more readily absorbed through the skin than chromium (III) compounds. Good practice requires the reduction of employee exposure to chromium (III) and (VI) compounds. **Cobalt** - Repeated overexposure to cobalt compounds can produce reduced pulmonary function, diffuse nodular fibrosis of lungs and respiratory hypersensitivity. **Copper** - Copper poisoning has been reported in the literature from exposure to high levels of copper. Liver damage can occur due to copper accumulating in the liver characterized by cell destruction and cirrhosis. High levels of copper may cause anemia and jaundice. High levels of copper may cause central nervous system damage characterized by nerve fiber separation and cerebral degeneration. **Fluorides** - Serious bone erosion (Osteoporosis) and mottling of teeth. **Iron, Iron Oxide Fumes** - Can cause siderosis (deposits of iron in lungs) which some researchers believe may affect pulmonary function. Lungs will clear in time when exposure to iron and its compounds ceases. Iron and magnetite (Fe_3O_4) are not regarded as fibrogenic materials. **Lithium Compounds** - May be considered as potentially teratogenic. **Magnesium, Magnesium Oxide** - No adverse long term health effects have been reported in the literature. **Manganese** - Long-term overexposure to manganese compounds may affect the central nervous system. Symptoms may be similar to Parkinson's disease and can include slowness, changes in handwriting, gait impairment, muscle spasms and cramps and less commonly, tremor and behavioral changes. Employees who are overexposed to manganese compounds should be seen by a physician for early detection of neurologic problems. Overexposure to manganese and manganese compounds above safe exposure limits can cause irreversible damage to the central nervous system, including the brain, symptoms of which may include slurred speech, lethargy, tremor, muscular weakness, psychological disturbances and spastic gait. **Molybdenum, Cerium Oxide** - Prolonged overexposure may result in loss of appetite, weight loss, loss of muscle coordination, difficulty in breathing and anemia. **Nickel, Nickel Compounds** - Lung fibrosis or pneumoconiosis. Studies of nickel refinery workers indicated a higher incidence of lung and nasal cancers. **Silica (Amorphous)** - Research indicates that silica is present in welding fume in the amorphous form. Long term overexposure may cause pneumoconiosis. Noncrystalline forms of silica (amorphous silica) are considered to have little fibrotic potential. **Strontium Compounds** - Strontium at

high doses is known to concentrate in bone. Major signs of chronic toxicity, which involve the skeleton, have been labeled as "strontium rickets". **Titanium Dioxide** - Pulmonary irritation and slight fibrosis.

MEDICAL CONDITIONS AGGRAVATED BY EXPOSURE: Persons with pre-existing impaired lung functions (asthma-like conditions). Persons with a pacemaker should not go near welding and cutting operations until they have consulted their doctor and obtained information from the manufacturer of the device. Respirators are to be worn only after being medically cleared by your company-designated physician.

EMERGENCY AND FIRST AID PROCEDURES: Call for medical aid. Employ first aid techniques recommended by the American Red Cross. If irritation or flash burns develop after exposure, consult a physician.

CARCINOGENICITY: Chromium VI compounds, nickel compounds and silica (crystalline quartz) are classified as IARC Group 1 and NTP Group K carcinogens. Titanium dioxide, antimony trioxide compounds and cobalt compounds are classified as IARC Group 2B carcinogens. Chromium VI compounds, cobalt compounds, nickel compounds, silica (crystalline quartz) and welding fumes must be considered as carcinogens under OSHA (29 CFR 1910.1200).

CALIFORNIA PROPOSITION 65: For Group C and D products: WARNING: This product contains or produces a chemical known to the State of California to cause cancer and birth defects (or other reproductive harm). (California Health & Safety Code Section 25249.5 et seq.) For Group A and B products: WARNING: This product, when used for welding or cutting, produces fumes or gases which contain chemicals known to the State of California to cause birth defects and, in some cases, cancer. (California Health & Safety Code Section 25249.5 et seq.)

SECTION 12 – ECOLOGICAL INFORMATION

Welding processes can release fumes directly to the environment. Welding wire can degrade if left outside and unprotected. Residues from welding consumables and processes could degrade and accumulate in the soil and groundwater.

SECTION 13 – DISPOSAL CONSIDERATIONS

Use recycling procedures if available. Discard any product, residue, packaging, disposable container or liner in an environmentally acceptable manner, in full compliance with federal, state and local regulations.

SECTION 14 – TRANSPORT INFORMATION

No international regulations or restrictions are applicable. No special precautions are necessary.

SECTION 15 – REGULATORY INFORMATION

Read and understand the manufacturer's instructions, your employer's safety practices and the health and safety instructions on the label and the material safety data sheet. Observe all local and federal rules and regulations. Take all necessary precautions to protect yourself and others.

United States EPA Toxic Substance Control Act: All constituents of these products are on the TSCA inventory list or are excluded from listing.

CERCLA/SARA TITLE III: Reportable Quantities (RQs) and/or Threshold Planning Quantities (TPQs):

Ingredient name	**RQ(lb)**	**TPQ (lb)**
Products on this MSDS are a solid solution in the form of a solid article.	--	--

Spills or releases resulting in the loss of any ingredient at or above its RQ require immediate notification to the National Response Center and to your Local Emergency Planning Committee.

Section 311 Hazard Class
As shipped: Immediate In use: Immediate delayed

EPCRA/SARA TITLE III 313 TOXIC CHEMICALS: The following metallic components are listed as SARA 313 "Toxic Chemicals" and potentially subject to annual SARA 312 reporting: Antimony Trioxide, Chromium, Cobalt, Copper, Lithium Carbonate, Manganese, and Nickel. See Section 3 for weight percentage.

CANADIAN WHMIS CLASSIFICATION: Class D; Division 2, Subdivision A

CANADIAN ENVIRONMENTAL PROTECTION ACT (CEPA): All constituents of these products are on the Domestic Substance List (DSL).

SECTION 16 – OTHER INFORMATION

The following Risk and Safety Phrase Texts and Hazard Statements correspond with the columns labeled - EU 67/548/EEC within Section 2 of this material safety data sheet. Take appropriate precautions and protective measures to eliminate or limit the associated hazard.

EU Directive 67/548/EEC - Risk Phrase Texts
R9 – Explosive when mixed with combustible material
R10 – Flammable
R11 – Highly flammable
R14/15 – Reacts violently with water, liberating extremely flammable gases
R15 – Contact with water liberates extremely flammable gases
R17 – Spontaneously flammable in air
R20/22 – Harmful by inhalation and if swallowed
R24/25 – Toxic in contact with skin and if swallowed
R26 – Very toxic by inhalation
R34 – Causes burns
R35 – Causes severe burns
R36/37 – Irritating to eyes and respiratory system
R40 – Limited evidence of a carcinogenic effect
R40/20 – Harmful: possible risk of irreversible effects through inhalation
R42/43 – May cause sensitization by inhalation and skin contact
R43 – May cause sensitization by skin contact
R45 – May cause cancer
R46 – May cause heritable genetic damage
R48/20 – Harmful: danger of serious damage to health by prolonged exposure through inhalation
R48/20/22 – Harmful: danger of serious damage to health by prolonged exposure through inhalation and if swallowed
R48/23 – Toxic: danger of serious damage to health by prolonged exposure through inhalation
R50 – Very toxic to aquatic organisms
R53 – May cause long-term adverse effects in the aquatic environment
R62 – Possible risk of impaired fertility

For additional information please refer to the following sources:

USA: **American National Standard (ANSI) Z49.1** "Safety in Welding and Cutting", **ANSI/American Welding Society (AWS) F1.5** "Methods for Sampling and Analyzing Gases from Welding and Allied Processes", **ANSI/AWS F1.1** "Method for Sampling Airborne Particles Generated by Welding and Allied Processes", **AWSF3.2M/F3.2** "Ventilation Guide for Weld Fume", **American Welding Society**, 550 North Le Jeune Road, Miami, Florida, 33135. Safety and Health Fact Sheets available from AWS at www.aws.org.
OSHA Publication 2206 (29 C.F.R. 1910), U.S. Government Printing Office, Superintendent of Documents, P.O. Box 371954, Pittsburgh, PA 15250-7954.
Threshold Limit Values and Biological Exposure Indices, American Conference of Governmental Hygienists (ACGIH), 6500 Glenway Ave., Cincinnati, Ohio 45211, USA.
NFPA 51B "Standard for Fire Prevention During Welding, Cutting and Other Hot Work" published by the National Fire Protection Association, 1 Batterymarch Park, Quincy, MA 02169.

UK: **WMA Publication 236 and 237**, "Hazards from Welding Fume", "The arc welder at work, some general aspects of health and safety".

Canada: **CSA Standard CAN/CSA-W117.2-01** "Safety in Welding, Cutting and Allied Processes".

Hobart Brothers Company strongly recommends the users of this product study this MSDS, the product label information and become aware of all hazards associated with welding. Hobart Brothers Company believes this data to be accurate and to reflect qualified expert opinion regarding current research. However, Hobart Brothers Company cannot make any expressed or implied warranty as to this information.

HOBART BROTHERS

C

MATERIAL SAFETY DATA SHEET

This Material Safety Data Sheet (MSDS) is for U.S. manufactured or distributed welding consumables and related products and may be used to comply with OSHA's Hazard Communication standard, 29 CFR 1910.1200, and Superfund Amendments and Reauthorization Act (SARA) of 1986 Public Law 99-499. The OSHA standard must be consulted for specific requirements. This Safety Data Sheet complies with European Commission Directive 89/106/EEC, 91/155/EEC, ISO 11014-1 and ANSI Z400.1. This document is translated in several languages and available on our website at www.hobartbrothers.com, from your sales representative or by calling customer service at 1 (937) 332-4000.

SECTION 1 – IDENTIFICATION

Manufacturer Name: HOBART BROTHERS COMPANY
Address: 101 TRADE SQUARE EAST, TROY, OH 45373
Website: www.hobartbrothers.com

Telephone No: 1 (937) 332-4000
Emergency No: 1 (800) 424-9300

Products Type: TUBULAR ARC WELDING ELECTRODES FOR FLUX CORED, METAL CORED AND COMPOSITE SUBMERGED ARC WELDING

GROUP A: Product For: Gas Shielded Carbon and Low Alloy Steel

Trade Name: **ECLIPSE** RXR-XLS, ULTIMET 716; **EXCEL-ARC** 71; **FABCO** 82HD, 85, 90, HORNET, RXR, RXR-XLS, TR70, XL-71; **FABCOR** 80XLS, 86R, 96, 702; **FABDUAL** T9M, T91M; **FLUX-COR** 2, 7, 37, 80A1; **GALVACOR**; **HOBART** E71T-GS; **METAL-COR** 6, 6L, 80D2, EN-VISION; **METALLOY** 70, 70R, 70X, 71, 76, 80D2, EM12K-S, EM13K-S, X-CEL; **SPEED-ALLOY** 70, 71, 71A, 71-V, 719, 75, 105D2; **SPEED-COR** 6; **SUPER-COR**; **TM** 11, 22, 37, 55, 72, 73, 81A1, 95D2, 105D2, 711M, 791, 811A1, RX7; **TRIPLE**-7, 8; **VERSATILE**; **VERTI-COR** I, II, III; **VISION** AP70, HiDep 70, MetCOR 70

GROUP B: Product For: Self-Shielded Carbon Steel

Trade Name: **FABSHIELD** 4, 21B, 23, 55, 7027; **SELF-SHIELD** 4, 11, 11GS; **SPEED-SHIELD** 11, GS; **TM** 44, 121, 123

GROUP C: Product For: Carbon and Low Alloy Steel

Trade Name: **FABCO** 81K2-C, 91K2-C, 107G, 110, 110K3-M, 115, 712M, 750M, 803; **FABCO XTREME** 120, B2, B3, B3V; **FABCOR** EDGE, EDGE MC, 209, 1100; **FABSHIELD** 3Ni1, 71K6, 79T8, 79T8-Ni2, 81N1, 81N1+, 81N2, K54, XLNT-6, XLR-8, X80, OFFSHORE 71Ni; **FLUX-COR** 90K2; **FORMULA** XL8Ni1, XL8Ni1-C, XL525, XL550; **MATRIX**; **METAL-COR** MAXIM; **METALLOY** 71 SG, 80B2, 80N1, 80N2, 90, 90B3, 100, 110, 120-S, B2-S, B3-S, F2-S, N1-S, N2-S, VANTAGE, VANTAGE CVN, VANTAGE D2, VANTAGE Ni1, W-S; **MX2**; **PREMIER** 70; **PW-201**; **SPEED-ALLOY** 81Ni1-V, 81Ni2-V, 85, 91B3, 111-V, 115, 125, 712, 712M, 790; **TM** 81B2, 81N1, 81N2, 81W, 91B3, 91K2, 91N2, 95K2, 101K3, 111K3, 115, 125K4, 770, 771, 71HYN, 811B2, 811N1, 811N2, 811N3, 811W, 881K2, 910, 911B3, 911N2, 991K2, 101, 101K3-C, 1101K3-M; **VERTI-COR** 70, 72, 81Ni2, 91B3, 91K2, 91Ni2, IINi1

GROUP D: Product For: Corrosion Resisting Steel

Trade Name: **FABCOR** 409; **FABLOY** 409, 439; **FABTUF** 960; **METAL-COR** 409, 409Cb, 439; **METALLOY** 18CrCb, 409, 439; **POWERCORE** 91; **SPEED-ALLOY** 5055; **TM** B6, B9

SECTION 2 – IDENTIFICATION OF HAZARDS

IMPORTANT - This section covers the hazardous materials from which this product is manufactured. The fumes and gases produced during welding with normal use of this product are also addressed in Section 8. The term "hazardous" in this section should be interpreted as a term required and defined in OSHA Hazard Communication Standard (29 CFR Part 1910.1200).

HAZARDOUS INGREDIENT	CAS	EINECS[Γ]	REGULATORY HAZARD CLASSIFICATION/DESIGNATION 67/548/EEC[Δ]	IARC[E]	NTP[Z]	OSHA[H]	65[Θ]
ALUMINUM	7429-90-5	231-072-3	F - R10, R15, R17	---	---	---	---
ANTIMONY TRIOXIDE	1309-64-4	215-175-0	Carc 3[Φ] - R40	2B	---	---	X
BARIUM FLOURIDE	7787-32-8	232-108-0	None	---	---	---	---
CALCIUM CARBONATE	1317-65-3	215-279-6	None	---	---	---	---
CERIUM OXIDE	1306-38-3	215-150-4	None	---	---	---	---
CHROMIUM	7440-47-3	231-157-5	O - R9; Carc 1[Φ] - R45; Muta 2 - R46; Repr 3 - R62; T+ - R26; T - R24/25, R48/23; C - R35, R42/43; N - R50, R53[ΣΣΣ]	1[ΣΣ], 3[Σ]	K[ΣΣ]	X[ΣΣ]	X[ΣΣ]
COBALT	7440-48-4	231-158-0	Xn; R42/43, R53	2B	---	X	X
COPPER	7440-50-8	231-159-6	None	---	---	---	---
FLUORSPAR	7789-75-5	232-188-7	None	---	---	---	---
IRON	7439-89-6	231-096-4	None	---	---	---	---
IRON OXIDE	1309-37-1	215-168-2	None	3	---	---	---
LITHIUM CARBONATE	554-13-2	209-062-5	F - R14/15; C - R34[T]	---	---	---	---
LITHIUM FLUORIDE	7789-24-4	232-152-0	F - R14/15; C - R34[T]	---	---	---	---
LITHIUM OXIDE	12057-24-8	235-019-5	F - R14/15; C - R34[T]	---	---	---	---
MAGNESIUM	7439-95-4	231-104-6	F - R11, R15, R17	---	---	---	---
MAGNESIUM OXIDE	1309-48-4	215-171-9	None	---	---	---	---
MANGANESE	7439-96-5	231-105-1	Xn - R20/22[Y]	---	---	---	---
MOLYBDENUM	7439-98-7	231-107-2	Xn - R48/20/22; Xi - R36/37[X]	---	---	---	---
NICKEL	7440-02-0	231-111-4	Carc 3[Φ] - R40; T - R43, R48/23	1	K	X	X
SILICA	14808-60-7	238-878-4	Xn - R48/20, R40/20	1[Ψ]	K	X	X
(Amorphous Silica Fume)	69012-64-2	273-761-5	None	3	K	---	X
SILICON	7440-21-3	231-130-8	None	---	---	---	---
STRONTIUM FLUORIDE	7783-48-4	232-000-3	None	---	---	---	---
TITANIUM	7440-32-6	231-142-3	None	---	---	---	---
TITANIUM DIOXIDE	13463-67-7	236-675-5	None	2B	---	---	X

Γ – European INventory of Existing Chemical Substances Number Δ - European Union Directive 67/548/EEC – Annex 1 E – International Agency for Research on Cancer (1 – Human Carcinogen, 2A – Probably Carcinogenic to Humans, 2B – Possibly Carcinogenic to Humans, 3 – Unclassifiable as to Carcinogenicity in Humans, 4 Probably Not Carcinogenic to Humans) Z – US National Toxicology Program (K – Known Carcinogen, S – Suspected Carcinogen) H – OSHA Known Carcinogen List Θ – California Proposition 65 (X – On Proposition 65 list) --- Dashes indicate the ingredient is not listed with the IARC, NTP, OSHA or 65 Φ – Carcinogen, Mutagen or Reproductive Category per European Council Directive 67/548/EEC Annex I Σ – Metal and Chromium III Compounds ΣΣ – Chromium VI Compounds ΣΣΣ – Chromium (VI) Trioxide EU 67/548/EEC Classification/Designation Y – Manganese Dioxide EU 67/548/EEC Classification/Designation X – Molybdenum Trioxide EU 67/548/EEC Classification/Designation T – Lithium EU 67/548/EEC Classification/Designation Ψ – Silica Crystalline α-Quartz

The following symbols correspond with the EU 67/548/EEC column above are in European Union Directive 67/548/EEC Annex 1 and EC 1272/2008 Annex VI – Table 3.2:

F – Flammable

Xn – Harmful

Xi – Irritant

O - Oxidizer

C – Corrosive

N – Dangerous for the Environment

T – Toxic

T+ - Extremely Toxic

WARNING! - Avoid breathing welding fumes and gases, they may be dangerous to your health. Always use adequate ventilation. Always use appropriate personal protective equipment.

PRIMARY ROUTES OF ENTRY: Respiratory System, Eyes and/or Skin.
ELECTRIC SHOCK: Arc welding and associated processes can kill. See Section 8.

ARC RAYS: The welding arc can injure eyes and burn skin.
FUMES AND GASES: Can be dangerous to your health.

Welding fumes and gases cannot be classified simply. The composition and quantity of both are dependent upon the metal being welded, the process, procedures and electrodes used. Most fume ingredients are present as complex oxides and compounds and not as pure metals. When the electrode is consumed, the fume and gas decomposition products generated are different in percent and form from the ingredients listed in Section 3. Decomposition products of normal operation include those originating from the volatilization,

reaction or oxidation of the materials shown in this section, plus those from the base metal and coating, etc., as noted above. Monitor for the materials identified in the list within this section.

Fumes from the use of this product may contain complex oxides or compounds of the following elements and molecules: amorphous silica fume, antimony trioxide, barium, calcium oxide, chromium, cobalt, copper, fluorspar or fluorides, lithium, manganese, nickel, silica and strontium. Other reasonably expected constituents of the fume would also include complex oxides of iron, titanium, silicon and molybdenum. Gaseous reaction products may include carbon monoxide and carbon dioxide. Ozone and nitrogen oxides may be formed by the radiation from the arc. Other conditions which also influence the composition and quantity of the fumes and gases to which workers may be exposed include: coatings on the metal being welded (such as paint, plating or galvanizing), the number of welders and the volume of the work area, the quality and amount of ventilation, the position of the welder's head with respect to the fume plume, as well as the presence of contaminants in the atmosphere (such as chlorinated hydrocarbon vapors from cleaning and degreasing activities). One recommended way to determine the composition and quantity of fumes and gases to which workers are exposed is to take an air sample inside the welder's helmet if worn or in the worker's breathing zone. See ANSI/AWS F1.1, available from the "American Welding Society", P.O. Box 351040, Miami, FL 33135. Also, from AWS is F1.3 "Evaluating Contaminants in the Welding Environment - A Sampling Strategy Guide", which gives additional advice on sampling.

SECTION 3 – HAZARDOUS INGREDIENTS

CONTENT PERCENTAGE BY INGREDIENTS

INGREDIENT	CAS	EINECS	GROUP AND %WEIGHT A	B	C	D
ALUMINUM	7429-90-5	231-072-3	<2	<5	<3(6)	---
ANTIMONY TRIOXIDE	1309-64-4	215-175-0	---	---	<1(12)	---
BARIUM FLOURIDE	7787-32-8	232-108-0	---	<12(1)	<12(3)	---
CALCIUM CARBONATE	1317-65-3	215-279-6	<2	<2(7)	---	---
CERIUM OXIDE	1306-38-3	215-150-4	---	---	<2(11)	---
CHROMIUM	7440-47-3	231-157-5	---	---	<3	5-20
COBALT	7440-48-4	231-158-0	---	---	<1(10)	---
COPPER	7440-50-8	231-159-6	<1(2)	---	<2(2)	---
FLUORSPAR	7789-75-5	232-188-7	<5(5)	<10	<5	---
IRON	7439-89-6	231-096-4	75-98	75-95	75-98	75-95
IRON OXIDE	1309-37-1	215-168-2	---	---	<12	---
LITHIUM CARBONATE	554-13-2	209-062-5	---	---	<2	---
LITHIUM FLUORIDE	7789-24-4	232-152-0	---	<2(9)	<2(9)	---

INGREDIENT	CAS	EINECS	GROUP AND %WEIGHT A	B	C	D
LITHIUM OXIDE	12057-24-8	235-019-5	---	---	<2	---
MAGNESIUM	7439-95-4	231-104-6	---	<3	<2	---
MAGNESIUM OXIDE	1309-48-4	215-171-9	---	<3	<2	---
MANGANESE	7439-96-5	231-105-1	<5	<2	<4	<2
MOLYBDENUM	7439-98-7	231-107-2	<1	---	<2	<2
NICKEL	7440-02-0	231-111-4	---	---	<4	<1
SILICA (Amorphous Silica Fume)	14808-60-7 69012-64-2	238-878-4 273-761-5	<2	<2	<2	---
SILICON	7440-21-3	231-130-8	<4	<2(4)	<4	<2
STRONTIUM FLUORIDE	7783-48-4	232-000-3	---	<2(8)	---	---
TITANIUM	7440-32-6	231-142-3	---	<2	<2	<2
TITANIUM DIOXIDE	13463-67-7	236-675-5	<10	<4(4)	<10	<2

--- Dashes indicate the ingredient is not present within the group of products (1) Present only in FABSHIELD 21B, 23; TM 121, 123; SELF-SHIELD 11, 11GS (2) Present only in FABCO 110K3-M; GALVACOR; METALLOY WS; TM-81W, 811W (3) Present only in FABCO XTREME 120, B2, B3; FABSHIELD 3Ni1, 71K6, 79T8, 81N1, 81N1+, 81N2, XLNT-6; FABSHIELD OFFSHORE 71Ni (4) Present only in FABSHIELD 55 (5) Present only in METALLLOY EM13K-S; SPEED-ALLOY 105D2; TM 55, 75A1, 95D2, 105D2 (6) Present only in FABCO XTREME 120, B2, B3; FABSHIELD 3Ni1, 71K6, 79T8, 81N1, 81N1+, 81N2, XLNT-6; FABSHIELD OFFSHORE 71Ni (7) Present only in FABSHIELD 7027 (8) Present only in FABSHIELD 21B; TM 121 (9) Present only in FABCO 750M; FABSHIELD 7027 (10) Present only in FABSHIELD 71K6, 81N1, 81N2 (11) Present only in FABSHIELD 79T8, 81N1+, XLNT-6; FABSHIELD OFFSHORE 71Ni; (12) Present only in MATRIX; METAL-COR MAXIM; METALLOY VANTAGE, VANTAGE CVN, VANTAGE D2, VANTAGE Ni1

SECTION 4 – FIRST AID MEASURES

INHALATION: If breathing is difficult provide fresh air and contact physician. **EYE/SKIN INJURIES:** For radiation burns, see physician.

Section 11 of this MSDS covers the acute effects of overexposure to the various ingredients within the welding consumable. Section 8 of this MSDS lists the exposure limits and covers methods for protecting yourself and your co-workers.

SECTION 5 - FIRE AND EXPLOSION HAZARD DATA

Welding consumables applicable to this sheet as shipped are nonreactive, nonflammable, nonexplosive and essentially nonhazardous until welded. Welding arcs and sparks can ignite combustibles and flammable products. Unused welding consumables may remain hot for a period of time after completion of a welding process. See American National Standard (ANSI) Z49.1 for further general safety information on the use and handling of welding consumables and associated procedures.

SECTION 6 - ACCIDENTAL RELEASE MEASURES

Solid objects can be picked up and placed into a container. Wear proper personal protective equipment while handling. Do not discard as general trash.

SECTION 7 - HANDLING AND STORAGE

HANDLING: No specific requirements in the form supplied. Handle with care to avoid cuts. Wear gloves when handling welding consumables. Avoid exposure to dust. Do not ingest. Some individuals can develop an allergic reaction to certain materials. Retain all warning and product labels.

STORAGE: Keep separate from acids and strong bases to prevent possible chemical reactions.

SECTION 8 - EXPOSURE CONTROL AND PERSONAL PROTECTION

Read and understand the instructions and the labels on the packaging. Welding fumes do not have a specific OSHA PEL or ACGIH TLV. The OSHA PEL for Particulate – Not Otherwise Classified (PNOC) is 5 mg/m^3 – Respirable Fraction, 15 mg/m^3 – Total Dust. The ACGIH TLV for Particles – Not Otherwise Specified (PNOS) is 3 mg/m^3 – Respirable Particles, 10 mg/m^3 – Inhalable Particles. The individual complex compounds within the fume may have a lower OSHA PEL or ACGIH TLV than the OSHA Particulate – Not Otherwise Classified (PNOC) and ACGIH Particles – Not Otherwise Specified (PNOS). An Industrial Hygienist, the OSHA Permissible Exposure Limits for Air Contaminants (29 CFR 1910.1000), and the ACGIH Threshold Limit Values should be consulted to determine the specific fume constituents present and their respective exposure limits. European Union Occupational Exposure Limits (EU OEL) are listed with the most stringent limit among the EU member nations. All exposure limits are in milligrams per cubic meter (mg/m^3).

INGREDIENT	CAS	EINECS	OSHA PEL	ACGIH TLV	EU OEL
ALUMINUM###	7429-90-5	231-072-3	5 R* (Dust)	1 R* {A4}	4 I*; 1.5 R* - Germany
ANTIMONY TRIOXIDE	1309-64-4	215-175-0	0.5 (as Sb)	0.5 (as Sb) {A2}	0.1 I*; 0.4*** - Hungary
					0.1 I* (Aerosol); 0.4*** (Aerosol) - Austria
BARIUM FLOURIDE#	7787-32-8	232-108-0	0.5 (as Ba)	0.5 (as Ba) {A4}	0.5 I* (Aerosol as Ba), 4*** (Aerosol as Ba) - Germany
CALCIUM CARBONATE	1317-65-3	215-279-6	5 R*, 5 (as CaO)	3 R*, 2 (as CaO)	10 I* (Aerosol) – UK; 3 R* (Aerosol) - Switzerland
CERIUM OXIDE	1306-38-3	215-150-4	5 R* (Dust), 15 (Dust)	3 R* (Dust), 10 (Dust)	4 I*; 1.5 R* (as Dust - NOS) - Germany
CHROMIUM#	7440-47-3	231-157-5	1 (Metal)	0.5 (Metal) {A4}	0.1 I* (Aerosol) - Switzerland
			0.5 (Cr II & Cr III Cpnds)	0.5 (Cr III Cpnds) {A4}	0.005; 0.01*** - Denmark
			0.005 (Cr VI Cpnds)	0.05 (Cr VI Sol Cpnds) {A1}	0.005 (Total Aerosol); 0.015***(Total Aerosol) - Sweden
				0.01 (Cr VI Insol Cpnds) {A1}	
COBALT	7440-48-4	231-158-0	0.1 (Dust and Fume)	0.02 {A3}	0.01 I*; 0.02*** - Denmark
COPPER	7440-50-8	231-159-6	0.1 (Fume), 1 (Dust)	0.2 (Fume), 1 (Dust)	0.1 I* (Aerosol); 0.2 I*** (Aerosol) - Germany
					0.1; 0.2*** - Denmark
FLUORSPAR	7789-75-5	232-188-7	2.5 (as F)	2.5 (as F) {A4}	1 I* (Aerosol as F); 4*** (Aerosol as F) - Germany
IRON+	7439-89-6	231-096-4	5 R*	5 R* (Fe_2O_3) {A4}	3 R* (Aerosol as Fe_2O_3) – Switzerland
					7*** (as Fe_2O_3) - Denmark
IRON OXIDE	1309-37-1	215-168-2	10 (Oxide Fume)	5 R* (Fe_2O_3) {A4}	3 R* (Aerosol as Fe_2O_3) – Switzerland
					7*** (as Fe_2O_3) - Denmark
LITHIUM CARBONATE	554-13-2	209-062-5	5 R* (Dust), 15 (Dust)	3 R* (Dust), 10 (Dust)	4 I*; 1.5 R* (as Dust - NOS) - Germany
LITHIUM FLUORIDE	7789-24-4	232-152-0	2.5 (as F)	2.5 (as F) {A4}	2.5 - UK
LITHIUM OXIDE	12057-24-8	235-019-5	1 ■ ■	3 R* (Dust), 10 (Dust)	4 I*; 1.5 R* (as Dust - NOS) - Germany
MAGNESIUM+	7439-95-4	231-104-6	5 R*	3 R*	3 R* (Aerosol) - Switzerland
					4 I*(Aerosol); 1.5 R*** (Aerosol) - Germany
MAGNESIUM OXIDE	1309-48-4	215-171-9	15 (Fume, Total Part)	10 I* {A4}	3 R* (Aerosol as Mg) – Switzerland

MANGANESE#	7439-96-5	231-105-1	5 CL ** (Fume) 1, 3 STEL*** ■	0.2 I* {A4} ♦ 0.02 R* ♦, ♦♦	4 I*(Aerosol as Mg); 1.5 R*** (Aerosol as Mg) - Germany 0.02 R*(Aerosol); 0.16 R*** (Aerosol) - Germany 0.2 I*(Aerosol) - Germany 0.2; 0.4*** - Denmark
MOLYBDENUM	7439-98-7	231-107-2	5 R*	3 R*; 10 I* (Ele and Insol) 0.5 R* (Sol Cpnds) {A3}	3 R* - Spain; 4; 10*** - Poland
NICKEL#	7440-02-0	231-111-4	1 (Metal) 1 (Sol Cpnds) 1 (Insol Cpnds)	1.5 I* (Ele) {A5} 0.1 I* (Sol Cpnds) {A4} 0.2 I* (Insol Cpnds) {A1}	0.05; 0.1*** - Denmark
SILICA++	14808-60-7	238-878-4	0.1 R*	0.025 R* {A2}	0.1 (Fused, Respirable Dust) - Denmark 0.2*** (Fused, Respirable Dust) - Denmark
(Amorphous Silica Fume)	69012-64-2	273-761-5	0.8	3 R*	2 I*; 4 I*** - Denmark
SILICON+	7440-21-3	231-130-8	5 R*	3 R*	4 R* (Aerosol); 10 I* (Aerosol) - Denmark
STRONTIUM FLUORIDE	7783-48-4	232-000-3	2.5 (as F)	2.5 (as F) {A4}	1 I* (Aerosol as F); 4*** (Aerosol as F) - Germany
TITANIUM+	7440-32-6	231-142-3	5 R*	3 R*	1.5 R* (as TiO_2) - Germany
TITANIUM DIOXIDE	13463-67-7	236-675-5	15 (Dust)	10 {A4}	1.5 R* - Germany

R* - Respirable Fraction R*** - Respirable Fraction - Short Term Exposure Limit I* - Inhalable Fraction I*** - Inhalable Fraction - Short Term Exposure Limit ** - Ceiling Limit *** - Short Term Exposure Limit + - As a nuisance particulate covered under "Particulates Not Otherwise Regulated" by OSHA or "Particulates Not Otherwise Classified" by ACGIH ++ - Crystalline silica is bound within the product as it exists in the package. However, research indicates silica is present in welding fume in the amorphous (noncrystalline) form #- Reportable material under Section 313 of SARA ### - Reportable material under Section 313 of SARA as dust or fume ■ - NIOSH REL TWA and STEL ■■ - AIHA Ceiling Limit of 1 mg/m^3 ♦ - Listed under ACGIH Notice of Intended Changes for Mn in 2010 ♦♦ - Limit of 0.02 mg/m^3 is proposed for Respirable Mn in 2011 by ACGIH Ele – Element Sol – Soluble Insol – Insoluble Inorg – Inorganic Cpnds – Compounds NOS – Not Otherwise Specified {A1} - Confirmed Human Carcinogen per ACGIH {A2} - Suspected Human Carcinogen per ACGIH {A3} - Confirmed Animal Carcinogen with Unknown Relevance to Humans per ACGIH {A4} - Not Classifiable as a Human Carcinogen per ACGIH {A5} - Not Suspected as a Human Carcinogen per ACGIH (noncrystalline) form

VENTILATION: Use enough ventilation, local exhaust at the arc or both to keep the fumes and gases below the PEL/TLV/OELs in the worker's breathing zone and the general area. Train the welder to keep his head out of the fumes.
RESPIRATORY PROTECTION: Use NIOSH approved or equivalent fume respirator or air supplied respirator when welding in confined space or where local exhaust or ventilation does not keep exposure below the regulatory limits.
EYE PROTECTION: Wear helmet or use face shield with filter lens. As a rule of thumb begin with Shade Number 14. Adjust if needed by selecting the next lighter and/or darker shade number. Provide protective screens and flash goggles, if necessary, to shield others from the weld arc flash.
PROTECTIVE CLOTHING: Wear hand, head and body protection which help to prevent injury from radiation, sparks and electrical shock. See ANSI Z49.1. At a minimum this includes welder's gloves and a protective face shield, and may include arm protectors, aprons, hats, shoulder protection as well as dark nonsynthetic clothing. Train the welder not to touch live electrical parts and to insulate himself from work and ground.
PROCEDURE FOR CLEANUP OF SPILLS OR LEAKS: Not applicable
SPECIAL PRECAUTIONS (IMPORTANT): Maintain exposure below the PEL/TLV/OEL. Use industrial hygiene monitoring to ensure that your use of this material does not create exposures which exceed PEL/TLV/OEL. Always use exhaust ventilation. Refer to the following sources for important additional information: American National Standard (ANSI) Z49.1; Safety in Welding and Cutting published by the American Welding Society, P.O. Box 351040, Miami, FL 33135 and OSHA Publication 2206 (29 CFR 1910), U.S. Government Printing Office, Washington, DC 20402.

SECTION 9 – PHYSICAL AND CHEMCIAL PROPERTIES

Welding consumables applicable to this sheet as shipped are nonreactive, nonflammable, nonexplosive and essentially nonhazardous until welded.
PHYSICAL STATE: Cored Wire
COLOR: Gray
ODOR: N/A
FORM: Round Wire

SECTION 10 – STABILITY AND REACTIVITY

GENERAL: Welding consumables applicable to this sheet are solid and nonvolatile as shipped. This product is only intended for use per the welding parameters it was designed for. When this product is used for welding, hazardous fumes may be created. Other factors to consider include the base metal, base metal preparation and base metal coatings. All of these factors can contribute to the fume and gases generated during welding. The amount of fume varies with the welding parameters.
STABILITY: This product is stable under normal conditions.
REACTIVITY: Contact with acids or strong bases may cause generation of gas.

SECTION 11 – TOXICOLOGICAL INFORMATION

SHORT-TERM (ACUTE) OVEREXPOSURE EFFECTS: Welding Fumes - May result in discomfort such as dizziness, nausea or dryness or irritation of nose, throat or eyes. **Aluminum Oxide** - Irritation of the respiratory system. **Antimony Compounds** - Irritation of nose, throat, eyes and skin. **Barium** - Aching eyes, rhinitis, frontal headache, wheezing, laryngeal spasms, salivation or anorexia. **Calcium Oxide** - Dust or fumes may cause irritation of the respiratory system, skin and eyes. **Chromium** - Inhalation of fume with chromium (VI) compounds can cause irritation of the respiratory tract, lung damage and asthma-like symptoms. Swallowing chromium (VI) salts can cause severe injury or death. Dust on skin can form ulcers. Eyes may be burned by chromium (VI) compounds. Allergic reactions may occur in some people. **Cobalt** - Pulmonary irritation, cough, dermatitis, weight loss. **Copper** - Metal fume fever characterized by metallic taste, tightness of chest and fever. Symptoms may last 24 to 48 hours following overexposure. **Fluorides** - Fluoride compounds evolved may cause skin and eye burns, pulmonary edema and bronchitis. **Iron, Iron Oxide** - None are known. Treat as nuisance dust or fume. **Lithium Compounds** - Overexposure may cause tremor and nausea. **Magnesium, Magnesium Oxide** - Overexposure to the oxide may cause metal fume fever characterized by metallic taste, tightness of chest and fever. Symptoms may last 24 to 48 hours following overexposure. **Manganese** - Metal fume fever characterized by chills, fever, upset stomach, vomiting, irritation of the throat and aching of body. Recovery is generally complete within 48 hours of the overexposure. **Molybdenum, Cerium Oxide** - Irritation of the eyes, nose and throat. **Nickel, Nickel Compounds** - Metallic taste, nausea, tightness in chest, metal fume fever, allergic reaction. **Silica (Amorphous)** - Dust and fumes may cause irritation of the respiratory system, skin and eyes. **Strontium Compounds** - Strontium salts are generally non-toxic and are normally present in the human body. In large oral doses, they may cause gastrointestinal disorders, vomiting and diarrhea. **Titanium Dioxide** - Irritation of respiratory system.
LONG-TERM (CHRONIC) OVEREXPOSURE EFFECTS: Welding Fumes - Excess levels may cause bronchial asthma, lung fibrosis, pneumoconiosis or "siderosis." **Aluminum Oxide** - Pulmonary fibrosis and emphysema. **Antimony Compounds** - Metal fume fever, dermatitis, keratitis, conjunctivitis and ulceration and perforation of the nasal septum. Avoid conditions in which fresh hydrogen will react with antimony to form stibine which is extremely toxic. **Barium** - Long term overexposure to soluble barium compounds may cause nervous disorders and may have deleterious effects on the heart, circulatory system and musculature. **Calcium Oxide** - Prolonged overexposure may cause ulceration of the skin and perforation of the nasal septum, dermatitis and pneumonia. **Chromium** - Ulceration and perforation of nasal septum. Respiratory irritation may occur with symptoms resembling asthma. Studies have shown that chromate production workers exposed to hexavalent chromium compounds have an excess of lung cancers. Chromium (VI) compounds are more readily absorbed through the skin than chromium (III) compounds. Good practice requires the reduction of employee exposure to chromium (III) and (VI) compounds. **Cobalt** - Repeated overexposure to cobalt compounds can produce reduced pulmonary function, diffuse nodular fibrosis of lungs and respiratory hypersensitivity. **Copper** - Copper poisoning has been reported in the literature from exposure to high levels of copper. Liver damage can occur due to copper accumulating in the liver characterized by cell destruction and cirrhosis. High levels of copper may cause anemia and jaundice. High levels of copper may cause central nervous system damage characterized by nerve fiber separation and cerebral degeneration. **Fluorides** - Serious bone erosion (Osteoporosis) and mottling of teeth. **Iron, Iron Oxide Fumes** - Can cause siderosis (deposits of iron in lungs) which some researchers believe may affect pulmonary function. Lungs will clear in time when exposure to iron and its compounds ceases. Iron and magnetite (Fe_3O_4) are not regarded as fibrogenic materials. **Lithium Compounds** - May be considered as potentially teratogenic. **Magnesium, Magnesium Oxide** - No adverse long term health effects have been reported in the literature. **Manganese** - Long-term overexposure to manganese compounds may affect the central nervous system. Symptoms may be similar to Parkinson's disease and can include slowness, changes in handwriting, gait impairment, muscle spasms and cramps and less commonly, tremor and behavioral changes. Employees who are overexposed to manganese compounds should be seen by a physician for early detection of neurologic problems. Overexposure to manganese and manganese compounds above safe exposure limits can cause irreversible damage to the central nervous system, including the brain, symptoms of which may include slurred speech, lethargy, tremor, muscular weakness, psychological disturbances and spastic gait. **Molybdenum, Cerium Oxide** - Prolonged overexposure may result in loss of appetite, weight loss, loss of muscle coordination, difficulty in breathing and anemia. **Nickel, Nickel Compounds** - Lung fibrosis or pneumoconiosis. Studies of nickel refinery workers indicated a higher incidence of lung and nasal cancers. **Silica (Amorphous)** - Research indicates that silica is present in welding fume in the amorphous form. Long term overexposure may cause pneumoconiosis. Noncrystalline forms of silica (amorphous silica) are considered to have little fibrotic potential. **Strontium Compounds** - Strontium at

high doses is known to concentrate in bone. Major signs of chronic toxicity, which involve the skeleton, have been labeled as "strontium rickets". **Titanium Dioxide** - Pulmonary irritation and slight fibrosis.

MEDICAL CONDITIONS AGGRAVATED BY EXPOSURE: Persons with pre-existing impaired lung functions (asthma-like conditions). Persons with a pacemaker should not go near welding and cutting operations until they have consulted their doctor and obtained information from the manufacturer of the device. Respirators are to be worn only after being medically cleared by your company-designated physician.

EMERGENCY AND FIRST AID PROCEDURES: Call for medical aid. Employ first aid techniques recommended by the American Red Cross. If irritation or flash burns develop after exposure, consult a physician.

CARCINOGENICITY: Chromium VI compounds, nickel compounds and silica (crystalline quartz) are classified as IARC Group 1 and NTP Group K carcinogens. Titanium dioxide, antimony trioxide compounds and cobalt compounds are classified as IARC Group 2B carcinogens. Chromium VI compounds, cobalt compounds, nickel compounds, silica (crystalline quartz) and welding fumes must be considered as carcinogens under OSHA (29 CFR 1910.1200).

CALIFORNIA PROPOSITION 65: For Group C and D products: **WARNING:** This product contains or produces a chemical known to the State of California to cause cancer and birth defects (or other reproductive harm). (California Health & Safety Code Section 25249.5 et seq.) For Group A and B products: WARNING: This product, when used for welding or cutting, produces fumes or gases which contain chemicals known to the State of California to cause birth defects and, in some cases, cancer. (California Health & Safety Code Section 25249.5 et seq.)

SECTION 12 – ECOLOGICAL INFORMATION

Welding processes can release fumes directly to the environment. Welding wire can degrade if left outside and unprotected. Residues from welding consumables and processes could degrade and accumulate in the soil and groundwater.

SECTION 13 – DISPOSAL CONSIDERATIONS

Use recycling procedures if available. Discard any product, residue, packaging, disposable container or liner in an environmentally acceptable manner, in full compliance with federal, state and local regulations.

SECTION 14 – TRANSPORT INFORMATION

No international regulations or restrictions are applicable. No special precautions are necessary.

SECTION 15 – REGULATORY INFORMATION

Read and understand the manufacturer's instructions, your employer's safety practices and the health and safety instructions on the label and the material safety data sheet. Observe all local and federal rules and regulations. Take all necessary precautions to protect yourself and others.

United States EPA Toxic Substance Control Act: All constituents of these products are on the TSCA inventory list or are excluded from listing.

CERCLA/SARA TITLE III: Reportable Quantities (RQs) and/or Threshold Planning Quantities (TPQs):

Ingredient name	**RQ(lb)**	**TPQ (lb)**
Products on this MSDS are a solid solution in the form of a solid article.	--	--

Spills or releases resulting in the loss of any ingredient at or above its RQ require immediate notification to the National Response Center and to your Local Emergency Planning Committee.

Section 311 Hazard Class
As shipped: Immediate In use: Immediate delayed

EPCRA/SARA TITLE III 313 TOXIC CHEMICALS: The following metallic components are listed as SARA 313 "Toxic Chemicals" and potentially subject to annual SARA 312 reporting: Antimony Trioxide, Chromium, Cobalt, Copper, Lithium Carbonate, Manganese, and Nickel. See Section 3 for weight percentage.

CANADIAN WHMIS CLASSIFICATION: Class D; Division 2, Subdivision A

CANADIAN ENVIRONMENTAL PROTECTION ACT (CEPA): All constituents of these products are on the Domestic Substance List (DSL).

SECTION 16 – OTHER INFORMATION

The following Risk and Safety Phrase Texts and Hazard Statements correspond with the columns labeled - EU 67/548/EEC within Section 2 of this material safety data sheet. Take appropriate precautions and protective measures to eliminate or limit the associated hazard.

EU Directive 67/548/EEC - Risk Phrase Texts
R9 – Explosive when mixed with combustible material
R10 – Flammable
R11 – Highly flammable
R14/15 – Reacts violently with water, liberating extremely flammable gases
R15 – Contact with water liberates extremely flammable gases
R17 – Spontaneously flammable in air
R20/22 – Harmful by inhalation and if swallowed
R24/25 – Toxic in contact with skin and if swallowed
R26 – Very toxic by inhalation
R34 – Causes burns
R35 – Causes severe burns
R36/37 – Irritating to eyes and respiratory system
R40 – Limited evidence of a carcinogenic effect
R40/20 – Harmful: possible risk of irreversible effects through inhalation
R42/43 – May cause sensitization by inhalation and skin contact
R43 – May cause sensitization by skin contact
R45 – May cause cancer
R46 – May cause heritable genetic damage
R48/20 – Harmful: danger of serious damage to health by prolonged exposure through inhalation
R48/20/22 – Harmful: danger of serious damage to health by prolonged exposure through inhalation and if swallowed
R48/23 – Toxic: danger of serious damage to health by prolonged exposure through inhalation
R50 – Very toxic to aquatic organisms
R53 – May cause long-term adverse effects in the aquatic environment
R62 – Possible risk of impaired fertility

For additional information please refer to the following sources:

USA: **American National Standard (ANSI) Z49.1** "Safety in Welding and Cutting", **ANSI/American Welding Society (AWS) F1.5** "Methods for Sampling and Analyzing Gases from Welding and Allied Processes", **ANSI/AWS F1.1** "Method for Sampling Airborne Particles Generated by Welding and Allied Processes", **AWSF3.2M/F3.2** "Ventilation Guide for Weld Fume", American Welding Society, 550 North Le Jeune Road, Miami, Florida, 33135. Safety and Health Fact Sheets available from AWS at www.aws.org.
OSHA Publication 2206 (29 C.F.R. 1910), U.S. Government Printing Office, Superintendent of Documents, P.O. Box 371954, Pittsburgh, PA 15250-7954.
Threshold Limit Values and Biological Exposure Indices, American Conference of Governmental Hygienists (ACGIH), 6500 Glenway Ave., Cincinnati, Ohio 45211, USA.
NFPA 51B "Standard for Fire Prevention During Welding, Cutting and Other Hot Work" published by the National Fire Protection Association, 1 Batterymarch Park, Quincy, MA 02169.

UK: **WMA Publication 236 and 237**, "Hazards from Welding Fume", "The arc welder at work, some general aspects of health and safety".

Canada: **CSA Standard CAN/CSA-W117.2-01** "Safety in Welding, Cutting and Allied Processes".

Hobart Brothers Company strongly recommends the users of this product study this MSDS, the product label information and become aware of all hazards associated with welding. Hobart Brothers Company believes this data to be accurate and to reflect qualified expert opinion regarding current research. However, Hobart Brothers Company cannot make any expressed or implied warranty as to this information.

HOBART BROTHERS

MATERIAL SAFETY DATA SHEET

This Material Safety Data Sheet (MSDS) is for U.S. manufactured or distributed welding consumables and related products and may be used to comply with OSHA's Hazard Communication standard, 29 CFR 1910.1200, and Superfund Amendments and Reauthorization Act (SARA) of 1986 Public Law 99-499. The OSHA standard must be consulted for specific requirements. This Safety Data Sheet complies with European Commission Directive 89/106/EEC, 91/155/EEC, ISO 11014-1 and ANSI Z400.1. This document is translated in several languages and available on our website at www.hobartbrothers.com, from your sales representative or by calling customer service at 1 (937) 332-4000.

SECTION 1 – IDENTIFICATION

Manufacturer/Supplier Name:	HOBART BROTHERS COMPANY	Telephone No: (937) 332-4000
Address:	101 TRADE SQUARE EAST, TROY, OH 45373	Emergency No: (800) 424-9300
Website:	www.hobartbrothers.com	
Product Type:	GAS METAL ARC WELDING (GMAW) SOLID WIRE	
AWS Specification:	ER70S-2, ER70S-3, ER70S-6, AND ER80S-D2	

SECTION 2 – IDENTIFICATION OF HAZARDS

IMPORTANT - This section covers the hazardous materials from which this product is manufactured. The fumes and gases produced during welding with normal use of this product are also addressed in Section 8. The term "hazardous" in this section should be interpreted as a term required and defined in OSHA Hazard Communication Standard (29 CFR Part 1910.1200).

HAZARDOUS INGREDIENT	CAS	EINECS[Γ]	REGULATORY HAZARD CLASSIFICATION/DESIGNATION 67/548/EEC[Δ]	IARC[Ε]	NTP[Ζ]	OSHA[Η]	65[Θ]
COPPER	7440-50-8	231-159-6	None	---	---	---	---
IRON	7439-89-6	231-096-4	None	---	---	---	---
MANGANESE	7439-96-5	231-105-1	Xn - R20/22[Υ]	---	---	---	---
MOLYBDENUM	7439-98-7	231-107-2	Xn - R48/20/22; Xi - R36/37[Χ]	---	---	---	---
SILICON	7440-21-3	231-130-8	None	---	---	---	---
(Amorphous Silica Fume)	69012-64-2	273-761-5	None	3	K	---	X

Γ – European INventory of Existing Chemical Substances Number Δ - European Union Directive 67/548/EEC – Annex 1 Ε – International Agency for Research on Cancer (1 – Human Carcinogen, 2A – Probably Carcinogenic to Humans, 2B – Possibly Carcinogenic to Humans, 3 – Unclassifiable as to Carcinogenicity in Humans, 4 Probably Not Carcinogenic to Humans) Ζ – US National Toxicology Program (K – Known Carcinogen, S – Suspected Carcinogen) Η – OSHA Known Carcinogen List Θ – California Proposition 65 (X – On Proposition 65 list) --- Dashes indicate the ingredient is not listed with the IARC, NTP, OSHA or 65 Φ – Carcinogen, Mutagen or Reproductive Category per European Council Directive 67/548/EEC Annex I Υ – Manganese Dioxide EU 67/548/EEC Classification/Designation Χ – Molybdenum Trioxide EU 67/548/EEC Classification/Designation

The following symbols correspond with the EU 67/548/EEC column above are in European Union Directive 67/548/EEC Annex 1 and EC 1272/2008 Annex VI – Table 3.2:

Xn – Harmful

Xi – Irritant

WARNING! - Avoid breathing welding fumes and gases, they may be dangerous to your health. Always use adequate ventilation. Always use appropriate personal protective equipment.

PRIMARY ROUTES OF ENTRY: Respiratory System, Eyes and/or Skin.
ELECTRIC SHOCK: Arc welding and associated processes can kill. See Section 8.
ARC RAYS: The welding arc can injure eyes and burn skin.
FUMES AND GASES: Can be dangerous to your health.

Welding fumes and gases cannot be classified simply. The composition and quantity of both are dependent upon the metal being welded, the process, procedures and electrodes used. Most fume ingredients are present as complex oxides and compounds and not as pure metals. When the electrode is consumed, the fume and gas decomposition products generated are different in percent and form from the ingredients listed in Section 3. Decomposition products of normal operation include those originating from the volatilization, reaction or oxidation of the materials shown in this section, plus those from the base metal and coating, etc., as noted above. Monitor for the materials identified in the list within this section.
Fumes from the use of this product may contain complex oxides or compounds of the following elements and molecules: amorphous silica fume, copper and manganese. Other reasonably expected constituents of the fume would also include complex oxides of iron and molybdenum. Gaseous reaction products may include carbon monoxide and carbon dioxide. Ozone and nitrogen oxides may be formed by the radiation from the arc. Other conditions which also influence the composition and quantity of the fumes and gases to which workers may be exposed include: coatings on the metal being welded (such as paint, plating or galvanizing), the number of welders and the volume of the work area, the quality and amount of ventilation, the position of the welder's head with respect to the fume plume, as well as the presence of contaminants in the atmosphere (such as chlorinated hydrocarbon vapors from cleaning and degreasing activities). One recommended way to determine the composition and quantity of fumes and gases to which workers are exposed is to take an air sample inside the welder's helmet if worn or in the worker's breathing zone. See ANSI/AWS F1.1, available from the "American Welding Society", P.O. Box 351040, Miami, FL 33135. Also, from AWS is F1.3 "Evaluating Contaminants in the Welding Environment - A Sampling Strategy Guide", which gives additional advice on sampling.

SECTION 3 – HAZARDOUS INGREDIENTS

INGREDIENT	CAS	EINECS	%WEIGHT	INGREDIENT	CAS	EINECS	%WEIGHT
COPPER (1)	7440-50-8	231-159-6	0.1-0.5	MOLYBDENUM (2)	7439-98-7	231-107-2	0.1-1
IRON	7439-89-6	231-096-4	95	SILICON	7440-21-3	231-130-8	0.5-1.5
MANGANESE	7439-96-5	231-105-1	1-5	(Amorphous Silica Fume)	69012-64-2	273-761-5	

(1) - Copper, if contained in the product, is clearly visible and only present as a surface coating. (2) – Present only in ER80S-D2. --- Dashes indicate the ingredient is not present within the group of products

SECTION 4 – FIRST AID MEASURES

INHALATION: If breathing is difficult provide fresh air and contact physician.
EYE/SKIN INJURIES: For radiation burns, see physician.
Section 11 of this MSDS covers the acute effects of overexposure to the various ingredients within the welding consumable. Section 8 of this MSDS lists the exposure limits and covers methods for protecting yourself and your co-workers.

SECTION 5 - FIRE AND EXPLOSION HAZARD DATA

Welding consumables applicable to this sheet as shipped are nonreactive, nonflammable, nonexplosive and essentially nonhazardous until welded. Welding arcs and sparks can ignite combustibles and flammable products. Unused welding consumables may remain hot for a period of time after completion of a welding process. See American National Standard (ANSI) Z49.1 for further general safety information on the use and handling of welding consumables and associated procedures.

SECTION 6 - ACCIDENTAL RELEASE MEASURES

Solid objects can be picked up and placed into a container. Wear proper personal protective equipment while handling. Do not discard as general trash.

SECTION 7 - HANDLING AND STORAGE

HANDLING: No specific requirements in the form supplied. Handle with care to avoid cuts. Wear gloves when handling welding consumables. Avoid exposure to dust. Do not ingest. Some individuals can develop an allergic reaction to certain materials. Retain all warning and product labels.
STORAGE: Keep separate from acids and strong bases to prevent possible chemical reactions.

SECTION 8 - EXPOSURE CONTROL AND PERSONAL PROTECTION

Read and understand the instructions and the labels on the packaging. Welding fumes do not have a specific OSHA PEL or ACGIH TLV. The OSHA PEL for Particulate – Not Otherwise Classified (PNOC) is 5 mg/m^3 – Respirable Fraction, 15 mg/m^3 – Total Dust. The ACGIH TLV for Particles – Not Otherwise Specified (PNOS) is 3 mg/m^3 – Respirable Particles, 10 mg/m^3 – Inhalable Particles. The individual complex compounds within the fume may have a lower OSHA PEL or ACGIH TLV than the OSHA Particulate – Not Otherwise Classified (PNOC) and ACGIH Particles – Not Otherwise Specified (PNOS). An Industrial Hygienist, the OSHA Permissible Exposure Limits for Air Contaminants (29 CFR 1910.1000), and the ACGIH Threshold Limit Values should be consulted to determine the specific fume constituents present and their respective exposure limits. European Union Occupational Exposure Limits (EU OEL) are listed with the most stringent limit among the EU member nations. All exposure limits are in milligrams per cubic meter (mg/m^3).

INGREDIENT	CAS	EINECS	OSHA PEL	ACGIH TLV	EU OEL
COPPER	7440-50-8	231-159-6	0.1 (Fume), 1 (Dust)	0.2 (Fume), 1 (Dust)	0.1 I* (Aerosol); 0.2 I*** (Aerosol) - Germany 0.1; 0.2*** - Denmark
IRON+	7439-89-6	231-096-4	5 R*	5 R* (Fe_2O_3) {A4}	3 R* (Aerosol as Fe_2O_3) – Switzerland 7*** (as Fe_2O_3) - Denmark
MANGANESE#	7439-96-5	231-105-1	5 CL** (Fume) 1, 3 STEL*** ■	0.2 I* {A4} ♦ 0.02 R* ♦, ♦♦	0.02 R*(Aerosol); 0.16 R*** (Aerosol) - Germany 0.2 I*(Aerosol) - Germany 0.2; 0.4*** - Denmark
MOLYBDENUM	7439-98-7	231-107-2	5 R*	3 R*; 10 I* (Ele and Insol) 0.5 R* (Sol Cpnds) {A3}	3 R* - Spain; 4; 10*** - Poland
SILICON+ (Amorphous Silica Fume)	7440-21-3 69012-64-2	231-130-8 273-761-5	5 R* 0.8	3 R* 3 R*	4 R* (Aerosol); 10 I* (Aerosol) - Denmark 2 I*; 4 I*** - Denmark

R* - Respirable Fraction R*** - Respirable Fraction - Short Term Exposure Limit I* - Inhalable Fraction I*** - Inhalable Fraction - Short Term Exposure Limit ** - Ceiling Limit *** - Short Term Exposure Limit + - As a nuisance particulate covered under "Particulates Not Otherwise Regulated" by OSHA or "Particulates Not Otherwise Classified" by ACGIH ■ - NIOSH REL TWA and STEL ♦ - Listed under ACGIH Notice of Intended Changes for Mn in 2010 ♦♦ - Limit of 0.02 mg/m^3 is proposed for Respirable Mn in 2011 by ACGIH Ele – Element Sol – Soluble Insol – Insoluble Inorg – Inorganic Cpnds – Compounds NOS – Not Otherwise Specified {A3} - Confirmed Animal Carcinogen with Unknown Relevance to Humans per ACGIH {A4} - Not Classifiable as a Human Carcinogen per ACGIH

VENTILATION: Use enough ventilation, local exhaust at the arc or both to keep the fumes and gases below the PEL/TLV/OELs in the worker's breathing zone and the general area. Train the welder to keep his head out of the fumes.
RESPIRATORY PROTECTION: Use NIOSH approved or equivalent fume respirator or air supplied respirator when welding in confined space or where local exhaust or ventilation does not keep exposure below the regulatory limits.
EYE PROTECTION: Wear helmet or use face shield with filter lens. As a rule of thumb begin with Shade Number 14. Adjust if needed by selecting the next lighter and/or darker shade number. Provide protective screens and flash goggles, if necessary, to shield others from the weld arc flash.
PROTECTIVE CLOTHING: Wear hand, head and body protection which help to prevent injury from radiation, sparks and electrical shock. See ANSI Z49.1. At a minimum this includes welder's gloves and a protective face shield, and may include arm protectors, aprons, hats, shoulder protection as well as dark nonsynthetic clothing. Train the welder not to touch live electrical parts and to insulate himself from work and ground.
PROCEDURE FOR CLEANUP OF SPILLS OR LEAKS: Not applicable
SPECIAL PRECAUTIONS (IMPORTANT): Maintain exposure below the PEL/TLV/OEL. Use industrial hygiene monitoring to ensure that your use of this material does not create exposures which exceed PEL/TLV/OEL. Always use exhaust ventilation. Refer to the following sources for important additional information: American National Standard (ANSI) Z49.1; Safety in Welding and Cutting published by the American Welding Society, P.O. Box 351040, Miami, FL 33135 and OSHA Publication 2206 (29 CFR 1910), U.S. Government Printing Office, Washington, DC 20402.

SECTION 9 – PHYSICAL AND CHEMCIAL PROPERTIES

Welding consumables applicable to this sheet as shipped are nonreactive, nonflammable, nonexplosive and essentially nonhazardous until welded.
PHYSICAL STATE: Cored Wire
ODOR: N/A
COLOR: Gray
FORM: Round Wire

SECTION 10 – STABILITY AND REACTIVITY

GENERAL: Welding consumables applicable to this sheet are solid and nonvolatile as shipped. This product is only intended for use per the welding parameters it was designed for. When this product is used for welding, hazardous fumes may be created. Other factors to consider include the base metal, base metal preparation and base metal coatings. All of these factors can contribute to the fume and gases generated during welding. The amount of fume varies with the welding parameters.
STABILITY: This product is stable under normal conditions.
REACTIVITY: Contact with acids or strong bases may cause generation of gas.

SECTION 11 – TOXICOLOGICAL INFORMATION

SHORT-TERM (ACUTE) OVEREXPOSURE EFFECTS: Welding Fumes - May result in discomfort such as dizziness, nausea or dryness or irritation of nose, throat or eyes. **Copper** - Metal fume fever characterized by metallic taste, tightness of chest and fever. Symptoms may last 24 to 48 hours following overexposure. **Iron, Iron Oxide** - None are known. Treat as nuisance dust or fume. **Manganese** - Metal fume fever characterized by chills, fever, upset stomach, vomiting, irritation of the throat and aching of body. Recovery is generally complete within 48 hours of the overexposure. **Molybdenum** - Irritation of the eyes, nose and throat. **Silica (Amorphous)** - Dust and fumes may cause irritation of the respiratory system, skin and eyes.
LONG-TERM (CHRONIC) OVEREXPOSURE EFFECTS: Welding Fumes - Excess levels may cause bronchial asthma, lung fibrosis, pneumoconiosis or "siderosis." **Copper** - Copper poisoning has been reported in the literature from exposure to high levels of copper. Liver damage can occur due to copper accumulating in the liver characterized by cell destruction and cirrhosis. High levels of copper may cause anemia and jaundice. High levels of copper may cause central nervous system damage characterized by nerve fiber separation and cerebral degeneration. **Iron, Iron Oxide Fumes** - Can cause siderosis (deposits of iron in lungs) which some researchers believe may affect pulmonary function. Lungs will clear in time when exposure to iron and its compounds ceases. Iron and magnetite (Fe_3O_4) are not regarded as fibrogenic materials. **Manganese** - Long-term overexposure to manganese compounds may affect the central nervous system. Symptoms may be similar to Parkinson's disease and can include slowness, changes in handwriting, gait impairment, muscle spasms and cramps and less commonly, tremor and behavioral changes. Employees who are overexposed to manganese compounds should be seen by a physician for early detection of neurologic problems. Overexposure to manganese and manganese compounds above safe exposure limits can cause irreversible damage to the central nervous system, including the brain, symptoms of which may include slurred speech, lethargy, tremor, muscular weakness, psychological disturbances and spastic gait. **Molybdenum** - Prolonged overexposure may result in loss of appetite, weight loss, loss of muscle coordination, difficulty in breathing and anemia. **Silica (Amorphous)** - Research indicates that silica is present in welding fume in the amorphous form. Long term overexposure may cause pneumoconiosis. Noncrystalline forms of silica (amorphous silica) are considered to have little fibrotic potential.
MEDICAL CONDITIONS AGGRAVATED BY EXPOSURE: Persons with pre-existing impaired lung functions (asthma-like conditions). Persons with a pacemaker should not go near welding and cutting operations until they have consulted their doctor and obtained information from the manufacturer of the device. Respirators are to be worn only after being medically cleared by your company-designated physician.
EMERGENCY AND FIRST AID PROCEDURES: Call for medical aid. Employ first aid techniques recommended by the American Red Cross. If irritation or flash burns develop after exposure, consult a physician.
CARCINOGENICITY: Welding fumes must be considered as carcinogens under OSHA (29 CFR 1910.1200).

CALIFORNIA PROPOSITION 65: WARNING: These products contain or produce a chemical known to the State of California to cause cancer and birth defects (or other reproductive harm). (California Health & Safety Code Section 25249.5 et seq.)

SECTION 12 – ECOLOGICAL INFORMATION

Welding processes can release fumes directly to the environment. Welding wire can degrade if left outside and unprotected. Residues from welding consumables and processes could degrade and accumulate in the soil and groundwater.

SECTION 13 – DISPOSAL CONSIDERATIONS

Use recycling procedures if available. Discard any product, residue, packaging, disposable container or liner in an environmentally acceptable manner, in full compliance with federal, state and local regulations.

SECTION 14 – TRANSPORT INFORMATION

No international regulations or restrictions are applicable. No special precautions are necessary.

SECTION 15 – REGULATORY INFORMATION

Read and understand the manufacturer's instructions, your employer's safety practices and the health and safety instructions on the label and the material safety data sheet. Observe all local and federal rules and regulations. Take all necessary precautions to protect yourself and others.

United States EPA Toxic Substance Control Act: All constituents of these products are on the TSCA inventory list or are excluded from listing.

CERCLA/SARA TITLE III: Reportable Quantities (RQs) and/or Threshold Planning Quantities (TPQs):

Ingredient name	**RQ(lb)**	**TPQ (lb)**
Products on this MSDS are a solid solution in the form of a solid article.	--	--

Spills or releases resulting in the loss of any ingredient at or above its RQ require immediate notification to the National Response Center and to your Local Emergency Planning Committee.

Section 311 Hazard Class
As shipped: Immediate In use: Immediate delayed

EPCRA/SARA TITLE III 313 TOXIC CHEMICALS: The following metallic components are listed as SARA 313 "Toxic Chemicals" and potentially subject to annual SARA 312 reporting: Manganese. See Section 3 for weight percentage.

CANADIAN WHMIS CLASSIFICATION: Class D; Division 2, Subdivision A

CANADIAN ENVIRONMENTAL PROTECTION ACT (CEPA): All constituents of these products are on the Domestic Substance List (DSL).

SECTION 16 – OTHER INFORMATION

The following Risk and Safety Phrase Texts and Hazard Statements correspond with the columns labeled - EU 67/548/EEC within Section 2 of this material safety data sheet. Take appropriate precautions and protective measures to eliminate or limit the associated hazard.

EU Directive 67/548/EEC - Risk Phrase Texts
R20/22 – Harmful by inhalation and if swallowed
R36/37 – Irritating to eyes and respiratory system
R48/20/22 – Harmful: danger of serious damage to health by prolonged exposure through inhalation and if swallowed

For additional information please refer to the following sources:
USA: **American National Standard (ANSI) Z49.1** "Safety in Welding and Cutting", **ANSI/American Welding Society (AWS) F1.5** "Methods for Sampling and Analyzing Gases from Welding and Allied Processes", **ANSI/AWS F1.1** "Method for Sampling Airborne Particles Generated by Welding and Allied Processes", **AWSF3.2M/F3.2** "Ventilation Guide for Weld Fume", American Welding Society, 550 North Le Jeune Road, Miami, Florida, 33135. Safety and Health Fact Sheets available from AWS at www.aws.org. **OSHA Publication 2206 (29 C.F.R. 1910)**, U.S. Government Printing Office, Superintendent of Documents, P.O. Box 371954, Pittsburgh, PA 15250-7954. **Threshold Limit Values and Biological Exposure Indices**, American Conference of Governmental Hygienists (ACGIH), 6500 Glenway Ave., Cincinnati, Ohio 45211, USA. **NFPA 51B** "Standard for Fire Prevention During Welding, Cutting and Other Hot Work" published by the National Fire Protection Association, 1 Batterymarch Park, Quincy, MA 02169.
UK: **WMA Publication 236 and 237**, "Hazards from Welding Fume", "The arc welder at work, some general aspects of health and safety".
Canada: **CSA Standard CAN/CSA-W117.2-01** "Safety in Welding, Cutting and Allied Processes".

Hobart Brothers Company strongly recommends the users of this product study this MSDS, the product label information and become aware of all hazards associated with welding. Hobart Brothers Company believes this data to be accurate and to reflect qualified expert opinion regarding current research. However, Hobart Brothers Company cannot make any expressed or implied warranty as to this information.

Date:	2/15/2011	MSDS No.:	US-M210
Trade Name:	Fleetweld 5P+		
Sizes:	All		
Supersedes:	3/19/2008		

MATERIAL SAFETY DATA SHEET

For Welding Consumables and Related Products

Conforms to Hazard Communication Standard 29CFR 1910.1200 Rev. October 1988

SECTION I - IDENTIFICATION

Manufacturer/ Supplier: The Lincoln Electric Company
22801 St. Clair Avenue
Cleveland, OH 44117-1199
(216) 481-8100

Product Type: Covered Electrode

Classification: AWS E6010

SECTION II - HAZARDOUS MATERIAL (1)

IMPORTANT!

This section covers the materials from which this product is manufactured. The fumes and gases produced during welding with the normal use of this product are covered by Section V; see it for industrial hygiene information.
CAS Number shown is representative for the ingredients listed. All ingredients listed may not be present in all sizes.
(1) The term "hazardous" in "Hazardous Materials" should be interpreted as a term required and defined in the Hazards Communication Standard and does not necessarily imply the existence of any hazard. All materials are listed on the TSCA inventory.

Ingredients:	CAS No.	Wt.%	TLV mg/m^3	PEL mg/m^3
Cellulose and other carbohydrates	65996-61-4	5	10*	15*
Silicates and other binders	1344-09-8	< 5	10*	15*
Titanium dioxides	13463-67-7	< 5	10	15
Iron	7439-89-6	< 5	10*	15*
Limestone and/or calcium carbonate	1317-65-3	< 5	10*	15
Manganese and/or manganese alloys and compounds (as Mn)*****	7439-96-5	1	0.2	5 (c)
Iron oxides	65996-74-9	< 0.5	5	10
Silicon and/or silicon alloys and compounds (as Si)	7440-21-3	< 0.5	10*	15*
Carbon steel core wire	7439-89-6	85	10*	10*

Supplemental Information:

(*) Not listed. The OSHA PEL for nuisance particles is 15 milligrams per cubic meter. The ACGIH guideline for total particulate is 10 milligrams per cubic meter. PEL value for iron oxide is 10 milligrams per cubic meter. TLV value for iron oxides is 5 milligrams per cubic meter.

(*****) Subject to the reporting requirements of Sections 311, 312, and 313 of the Emergency Planning and Community Right-to-Know Act of 1986 and of 40CFR 370 and 372.

(c) Value is for manganese fume. Present PEL is 5 milligrams per cubic meter (ceiling value). Values proposed by OSHA in 1989 were 1.0 milligrams per cubic meter TWA and 3.0 milligrams per cubic meter STEL (Short Term Exposure Limit).

SECTION III - HAZARD DATA

Non Flammable; Welding arc and sparks can ignite combustibles and flammable products. See Z49.1 referenced in Section VI.
Product is inert, no special handling or spill procedures required. Not regulated by DOT.

(CONTINUED ON SIDE TWO)

Product:	**Fleetweld 5P+**
Date:	**2/15/2011**

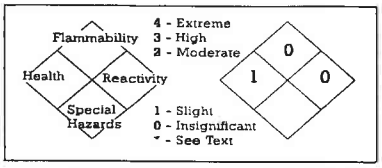

SECTION IV - HEALTH HAZARD DATA

Threshold Limit Value: The ACGIH recommended general limit for Welding Fume NOS - (Not Otherwise Specified) is 5 mg/m^3. ACGIH-1999 preface states that the TLV-TWA should be used as guides in the control of health hazards and should not be used as fine lines between safe and dangerous concentrations. See Section V for specific fume constituents which may modify this TLV. Threshold Limit Values are figures published by the American Conference of Government Industrial Hygienists. Units are milligrams per cubic meter of air.

Effects of Overexposure: Electric arc welding may create one or more of the following health hazards:
Fumes and Gases can be dangerous to your health. Common entry is by inhalation. Other possible routes are skin contact and ingestion.

Short-term (acute) overexposure to welding fumes may result in discomfort such as metal fume fever, dizziness, nausea, or dryness or irritation of nose, throat, or eyes. May aggravate pre-existing respiratory problems (e.g. asthma, emphysema).

Long-term (chronic) overexposure to welding fumes can lead to siderosis (iron deposits in lung) and may affect pulmonary function. Manganese overexposure can affect the central nervous system, resulting in impaired speech and movement. Bronchitis and some lung fibrosis have been reported. Titanium dioxide is listed on the IARC (International Agency for Research on Cancer) as a Group 2B carcinogen (possibly carcinogenic to humans based on animal studies). WARNING: This product, when used for welding or cutting, produces fumes or gases which contain chemicals known to the State of California to cause birth defects and, in some cases, cancer. (California Health & Safety Code Section 25249.5 et seq.)

Arc Rays can injure eyes and burn skin. ***Skin cancer has been reported.***
Electric Shock can kill. If welding must be performed in damp locations or with wet clothing, on metal structures or when in cramped positions such as sitting, kneeling or lying, or if there is a high risk of unavoidable or accidental contact with workpiece, use the following equipment: Semiautomatic DC Welder, DC Manual (Stick) Welder, or AC Welder with Reduced Voltage Control.

Emergency and First Aid Procedures: Call for medical aid. Employ first aid techniques recommended by the American Red Cross.
IF BREATHING IS DIFFICULT give oxygen. IF NOT BREATHING employ CPR (Cardiopulmonary Resuscitation) techniques.
IN CASE OF ELECTRICAL SHOCK, turn off power and follow recommended treatment. In all cases call a physician.

SECTION V - REACTIVITY DATA

Hazardous Decomposition Products: Welding fumes and gases cannot be classified simply. The composition and quantity of both are dependent upon the metal being welded, the process, procedure and electrodes used.

Other conditions which also influence the composition and quantity of the fumes and gases to which workers may be exposed include: coatings on the metal being welded (such as paint, plating, or galvanizing), the number of welders and the volume of the worker area, the quality and amount of ventilation, the position of the welder's head with respect to the fume plume, as well as the presence of contaminants in the atmosphere (such as chlorinated hydrocarbon vapors from cleaning and degreasing activities.)

When the electrode is consumed, the fume and gas decomposition products generated are different in percent and form from the ingredients listed in Section II. Decomposition products of normal operation include those originating from the volatilization, reaction, or oxidation of the materials shown in Section II, plus those from the base metal and coating, etc., as noted above.

Reasonably expected fume constituents of this product would include: Primarily iron oxide; secondarily complex oxides of manganese, silicon, sodium and titanium.

Maximum fume exposure guideline for this product is 5.0 milligrams per cubic meter.

Gaseous reaction products may include carbon monoxide and carbon dioxide. Ozone and nitrogen oxides may be formed by the radiation from the arc.

Determine the composition and quantity of fumes and gases to which workers are exposed by taking an air sample from inside the welder's helmet if worn or in the worker's breathing zone. Improve ventilation if exposures are not below limits. See ANSI/AWS F1.1, F1.2, F1.3 and F1.5, available from the American Welding Society, 550 N.W. LeJeune Road, Miami, FL 33126.

SECTION VI AND VII
CONTROL MEASURES AND PRECAUTIONS FOR SAFE HANDLING AND USE

Read and understand the manufacturer's instruction and the precautionary label on the product. Request Lincoln Safety Publication E205. See American National Standard Z49.1, "Safety In Welding, Cutting and Allied Processes" published by the American Welding Society, 550 N.W. LeJeune Road, Miami, FL, 33126 (both available for free download at http://www.lincolnelectric.com/community/safety/) and OSHA Publication 2206 (29CFR1910), U.S. Government Printing Office, Superintendent of Documents, P.O. Box 371954, Pittsburgh, PA 15250-7954 for more details on many of the following:

Ventilation: Use enough ventilation, local exhaust at the arc, or both to keep the fumes and gases from the worker's breathing zone and the general area. Train the welder to keep his head out of the fumes. ***Keep exposure as low as possible.***

Respiratory Protection: Use respirable fume respirator or air supplied respirator when welding in confined space or general work area when local exhaust or ventilation does not keep exposure below TLV.

Eye Protection: Wear helmet or use face shield with filter lens shade number 12 or darker. Shield others by providing screens and flash goggles.

Protective Clothing: Wear hand, head, and body protection which help to prevent injury from radiation, sparks and electrical shock. See Z49.1. At a minimum this includes welder's gloves and a protective face shield, and may include arm protectors, aprons, hats, shoulder protection, as well as dark substantial clothing. Train the welder not to permit electrically live parts or electrodes to contact skin . . . or clothing or gloves if they are wet. Insulate from work and ground.

Disposal Information: Discard any product, residue, disposable container, or liner as ordinary waste in an environmentally acceptable manner according to Federal, State and Local Regulations unless otherwise noted. No applicable ecological information available.

Date:	1/9/2012	MSDS No.:	US-M495-C
Trade Name:	Excalibur Stainless Manual Electrodes		
Sizes:	All		
Supersedes:	8/6/2010		

MATERIAL SAFETY DATA SHEET

For Welding Consumables and Related Products

Conforms to Hazard Communication Standard 29CFR 1910.1200 Rev. October 1988

SECTION I - IDENTIFICATION

Manufacturer/ Supplier: The Lincoln Electric Company
22801 St. Clair Avenue
Cleveland, OH 44117-1199
(216) 481-8100

Product Type: Covered Electrode

Products: *Excalibur*
308L-16, 308/308H-16
308/308L-15, 308/308L-17, 309/309L-16,
309/309L-15, 309/309L-17, 316/316L-16,
316/316L-15, 316/316L-17
308L-16 N, 309/309L-16 N,
316/316L-16 N

SECTION II - HAZARDOUS MATERIAL (1)

IMPORTANT!

This section covers the materials from which this product is manufactured. The fumes and gases produced during welding with the normal use of this product are covered by Section V; see it for industrial hygiene information.
CAS Number shown is representative for the ingredients listed. All ingredients listed may not be present in all sizes.
(1) The term "hazardous" in "Hazardous Materials" should be interpreted as a term required and defined in the Hazards Communication Standard and does not necessarily imply the existence of any hazard. All materials are listed on the TSCA inventory.

Ingredients:	CAS No.	Wt.%	TLV mg/m^3	PEL mg/m^3
Titanium dioxides	13463-67-7	15	10	15
Mineral silicates	1332-58-7	10	5**	5**
Limestone and/or calcium carbonate	1317-65-3	5	10*	15
Chromium and chromium alloys or compounds (as Cr)*****	7440-47-3	< 5	0.5(b)	1.0(b)
Silicates and other binders	1344-09-8	< 5	10*	15*
Iron	7439-89-6	< 5	10*	15*
Iron oxides	65996-74-9	< 5	5	10
Quartz	14808-60-7	< 5	#0.05**	#0.1**
Aluminum oxide and/or Bauxite	1344-28-1	< 5	10*	15
Manganese and/or manganese alloys and compounds (as Mn)*****	7439-96-5	1	0.2	5 (c)
Fluorides (as F)	7789-75-5	1	2.5	2.5
Nickel (metal)***** (316 type only)	7440-02-0	< 0.5	1.5	1
Molybdenum alloys (as Mo) (316 type only)	7439-98-7	< 0.5	10	10
Silicon and/or silicon alloys and compounds (as Si)	7440-21-3	< 0.5	10*	15*
Lithium compounds (as Li)	554-13-2	< 0.5	10*	15*
Stainless steel core wire	7439-89-6	65	10*	15*
Nominal core wire composition:				
Chromium*****	7440-47-3	20-30	0.5(b)	1.0(b)
Nickel*****	7440-02-0	10-13	1.5	1
Molybdenum (316 type only)	7439-98-7	2.5	10	10
Manganese*****	7439-96-5	2.0	0.2	5 (c)
Iron	7439-89-6	bal.	10*	10*

Supplemental Information:

(*) Not listed. The OSHA PEL for nuisance particles is 15 milligrams per cubic meter. The ACGIH guideline for total particulate is 10 milligrams per cubic meter. PEL value for iron oxide is 10 milligrams per cubic meter. TLV value for iron oxides is 5 milligrams per cubic meter.

(**) As respirable dust.

(*****) Subject to the reporting requirements of Sections 311, 312, and 313 of the Emergency Planning and Community Right-to-Know Act of 1986 and of 40CFR 370 and 372.

(b) The OSHA PEL for chromium (VI) is 5 micrograms (0.005 milligrams) per cubic meter. The TLV for water soluble chromium (VI) is 0.05 milligrams per cubic meter and the TLV for insoluble chromium (VI) is 0.01 milligrams per cubic meter.

(c) Value is for manganese fume. Present PEL is 5 milligrams per cubic meter (ceiling value). Values proposed by OSHA in 1989 were 1.0 milligrams per cubic meter TWA and 3.0 milligrams per cubic meter STEL (Short Term Exposure Limit).

(#) Crystalline silica (quartz) is on the IARC (International Agency for Research on Cancer) and NTP (National Toxicology Program) lists as posing a carcinogenic risk to humans.

SECTION III - HAZARD DATA

Non Flammable; Welding arc and sparks can ignite combustibles and flammable products. See Z49.1 referenced in Section VI.
Product is inert, no special handling or spill procedures required. Not regulated by DOT.

(CONTINUED ON SIDE TWO)

Product:	**Excalibur Stainless Manual Electrodes**
Date:	**1/9/2012**

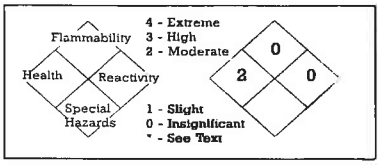

SECTION IV - HEALTH HAZARD DATA

Threshold Limit Value: The ACGIH recommended general limit for Welding Fume NOS - (Not Otherwise Specified) is 5 mg/m^3. ACGIH-1999 preface states that the TLV-TWA should be used as guides in the control of health hazards and should not be used as fine lines between safe and dangerous concentrations. See Section V for specific fume constituents which may modify this TLV. Threshold Limit Values are figures published by the American Conference of Government Industrial Hygienists. Units are milligrams per cubic meter of air.

Effects of Overexposure: Electric arc welding may create one or more of the following health hazards:
Fumes and Gases can be dangerous to your health. Common entry is by inhalation. Other possible routes are skin contact and ingestion.

Short-term (acute) overexposure to welding fumes may result in discomfort such as metal fume fever, dizziness, nausea, or dryness or irritation of nose, throat, or eyes. May aggravate pre-existing respiratory problems (e.g. asthma, emphysema). Exposure to extremely high levels of fluorides can cause abdominal pain, diarrhea, muscular weakness, and convulsions. In extreme cases it can cause loss of consciousness and death.

Long-term (chronic) overexposure to welding fumes can lead to siderosis (iron deposits in lung) and may affect pulmonary function. Manganese overexposure can affect the central nervous system, resulting in impaired speech and movement. Bronchitis and some lung fibrosis have been reported. Chromates may cause ulceration and perforation of the nasal septum. Liver damage and allergic reactions, including skin rash, have been reported. Chromates contain the hexavalent form of chromium. Hexavalent chromium and its compounds are on the IARC (International Agency for Research on Cancer) and NTP (National Toxicology Program) lists as posing a cancer risk to humans. Respiratory exposure to the crystalline silica present in this welding electrode is not anticipated during normal use. Respiratory overexposure to airborne crystalline silica is known to cause silicosis, a form of disabling pulmonary fibrosis which can be progressive and may lead to death. Crystalline silica is on the IARC (International Agency for Research on Cancer) and NTP (National Toxicology Program) lists as posing a cancer risk to humans. Repeated exposure to fluorides may cause excessive calcification of the bone and calcification of ligaments of the ribs, pelvis and spinal column. May cause skin rash. Nickel and its compounds are on the IARC (International Agency for Research on Cancer) and NTP (National Toxicology Program) lists as posing a cancer risk to humans. Nickel compounds are skin sensitizers with symptoms usually occurring after repeated exposure - ranging from a slight itch to severe dermatitis. WARNING: This product contains or produces a chemical known to the State of California to cause cancer and birth defects (or other reproductive harm). (California Health & Safety Code Section 25249.5 et seq.) Titanium dioxide is listed by the IARC (International Agency for Research on Cancer) as a Group 2B carcinogen (possibly carcinogenic to humans based on animal studies).
Arc Rays can injure eyes and burn skin. *Skin cancer has been reported.*
Electric Shock can kill. If welding must be performed in damp locations or with wet clothing, on metal structures or when in cramped positions such as sitting, kneeling or lying, or if there is a high risk of unavoidable or accidental contact with workpiece, use the following equipment: Semiautomatic DC Welder, DC Manual (Stick) Welder, or AC Welder with Reduced Voltage Control.

Emergency and First Aid Procedures: Call for medical aid. Employ first aid techniques recommended by the American Red Cross.
IF BREATHING IS DIFFICULT give oxygen. IF NOT BREATHING employ CPR (Cardiopulmonary Resuscitation) techniques.
IN CASE OF ELECTRICAL SHOCK, turn off power and follow recommended treatment. In all cases call a physician.

SECTION V - REACTIVITY DATA

Hazardous Decomposition Products: Welding fumes and gases cannot be classified simply. The composition and quantity of both are dependent upon the metal being welded, the process, procedure and electrodes used.
Other conditions which also influence the composition and quantity of the fumes and gases to which workers may be exposed include: coatings on the metal being welded (such as paint, plating, or galvanizing), the number of welders and the volume of the worker area, the quality and amount of ventilation, the position of the welder's head with respect to the fume plume, as well as the presence of contaminants in the atmosphere (such as chlorinated hydrocarbon vapors from cleaning and degreasing activities.)

When the electrode is consumed, the fume and gas decomposition products generated are different in percent and form from the ingredients listed in Section II. Decomposition products of normal operation include those originating from the volatilization, reaction, or oxidation of the materials shown in Section II, plus those from the base metal and coating, etc., as noted above.

Reasonably expected fume constituents of this product would include: Primarily iron oxide, potassium oxide and fluorides; secondarily complex oxides of aluminum, calcium, chromium, manganese, nickel, silicon, sodium and titanium.

Maximum fume exposure guideline for this product (based on Cr (VI) content) is 0.1 milligrams per cubic meter.
Keep exposure as low as possible. Indoors, use local exhaust; outdoors, a respirator may be required.
Gaseous reaction products may include carbon monoxide and carbon dioxide. Ozone and nitrogen oxides may be formed by the radiation from the arc.
Determine the composition and quantity of fumes and gases to which workers are exposed by taking an air sample from inside the welder's helmet if worn or in the worker's breathing zone. Improve ventilation if exposures are not below limits. See ANSI/AWS F1.1, F1.2, F1.3 and F1.5, available from the American Welding Society, 550 N.W. LeJeune Road, Miami, FL 33126.

SECTION VI AND VII
CONTROL MEASURES AND PRECAUTIONS FOR SAFE HANDLING AND USE

Read and understand the manufacturer's instruction and the precautionary label on the product. Request Lincoln Safety Publication E205. See American National Standard Z49.1, "Safety In Welding, Cutting and Allied Processes" published by the American Welding Society, 550 N.W. LeJeune Road, Miami, FL, 33126 (both available for free download at http://www.lincolnelectric.com/community/safety/) and OSHA Publication 2206 (29CFR1910), U.S. Government Printing Office, Superintendent of Documents, P.O. Box 371954, Pittsburgh, PA 15250-7954 for more details on many of the following:

Ventilation: Use enough ventilation, local exhaust at the arc, or both to keep the fumes and gases from the worker's breathing zone and the general area. Train the welder to keep his head out of the fumes. *Keep exposure as low as possible.*

Respiratory Protection: Use respirable fume respirator or air supplied respirator when welding in confined space or general work area when local exhaust or ventilation does not keep exposure below TLV.

Eye Protection: Wear helmet or use face shield with filter lens shade number 12 or darker. Shield others by providing screens and flash goggles.

Protective Clothing: Wear hand, head, and body protection which help to prevent injury from radiation, sparks and electrical shock. See Z49.1. At a minimum this includes welder's gloves and a protective face shield, and may include arm protectors, aprons, hats, shoulder protection, as well as dark substantial clothing. Train the welder not to permit electrically live parts or electrodes to contact skin or clothing or gloves if they are wet. Insulate from work and ground.

Disposal Information: Discard any product, residue, disposable container, or liner as ordinary waste in an environmentally acceptable manner according to Federal, State and Local Regulations unless otherwise noted. No applicable ecological information available.

Date:	6/1/2011	MSDS No.:	US-M291
Trade Name:	Excalibur 7018MR		
Sizes:	All		
Supersedes:	6/20/2008		

MATERIAL SAFETY DATA SHEET

For Welding Consumables and Related Products

Conforms to Hazard Communication Standard 29CFR 1910.1200 Rev. October 1988

SECTION I - IDENTIFICATION

Manufacturer/ Supplier: The Lincoln Electric Company
22801 St. Clair Avenue
Cleveland, OH 44117-1199
(216) 481-8100

Product Type: Covered Electrode

Classification: AWS E7018 H4R

SECTION II - HAZARDOUS MATERIAL (1)

IMPORTANT!

This section covers the materials from which this product is manufactured. The fumes and gases produced during welding with the normal use of this product are covered by Section V; see it for industrial hygiene information.
CAS Number shown is representative for the ingredients listed. All ingredients listed may not be present in all sizes.
(1) The term "hazardous" in "Hazardous Materials" should be interpreted as a term required and defined in the Hazards Communication Standard and does not necessarily imply the existence of any hazard. All materials are listed on the TSCA inventory.

Ingredients:	CAS No.	Wt.%	TLV mg/m^3	PEL mg/m^3
Iron	7439-89-6	15	10*	15*
Limestone and/or calcium carbonate	1317-65-3	10	10*	15
Titanium dioxides	13463-67-7	< 5	10	15
Fluorides (as F)	7789-75-5	< 5	2.5	2.5
Silicates and other binders	1344-09-8	< 5	10*	15*
Manganese and/or manganese alloys and compounds (as Mn)*****	7439-96-5	< 5	0.2	5 (c)
Mineral silicates	1332-58-7	1	5**	5**
Silicon and/or silicon alloys and compounds (as Si)	7440-21-3	1	10*	15*
Cellulose and other carbohydrates	65996-61-4	0.5	10*	15*
Quartz	14808-60-7	< 0.5	#0.025**	#0.1**
Lithium compounds (as Li)	554-13-2	< 0.5	10*	15*
Carbon steel core wire	7439-89-6	60	10*	15*

Supplemental Information:

(*) Not listed. The OSHA PEL for nuisance particles is 15 milligrams per cubic meter. The ACGIH guideline for total particulate is 10 milligrams per cubic meter. PEL value for iron oxide is 10 milligrams per cubic meter. TLV value for iron oxides is 5 milligrams per cubic meter.

(**) As respirable dust.

(*****) Subject to the reporting requirements of Sections 311, 312, and 313 of the Emergency Planning and Community Right-to-Know Act of 1986 and of 40CFR 370 and 372.

(c) Value is for manganese fume. Present PEL is 5 milligrams per cubic meter (ceiling value). Values proposed by OSHA in 1989 were 1.0 milligrams per cubic meter TWA and 3.0 milligrams per cubic meter STEL (Short Term Exposure Limit).

(#) Crystalline silica (quartz) is on the IARC (International Agency for Research on Cancer) and NTP (National Toxicology Program) lists as posing a carcinogenic risk to humans.

SECTION III - HAZARD DATA

Non Flammable; Welding arc and sparks can ignite combustibles and flammable products. See Z49.1 referenced in Section VI.
Product is inert, no special handling or spill procedures required. Not regulated by DOT.

(CONTINUED ON SIDE TWO)

Product:	**Excalibur 7018MR**
Date:	**6/1/2011**

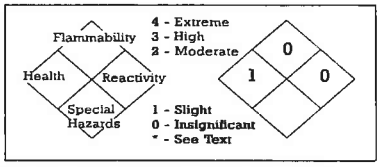

SECTION IV - HEALTH HAZARD DATA

Threshold Limit Value: The ACGIH recommended general limit for Welding Fume NOS - (Not Otherwise Specified) is 5 mg/m^3. ACGIH-1999 preface states that the TLV-TWA should be used as guides in the control of health hazards and should not be used as fine lines between safe and dangerous concentrations. See Section V for specific fume constituents which may modify this TLV. Threshold Limit Values are figures published by the American Conference of Government Industrial Hygienists. Units are milligrams per cubic meter of air.

Effects of Overexposure: Electric arc welding may create one or more of the following health hazards:
Fumes and Gases can be dangerous to your health. Common entry is by inhalation. Other possible routes are skin contact and ingestion.

Short-term (acute) overexposure to welding fumes may result in discomfort such as metal fume fever, dizziness, nausea, or dryness or irritation of nose, throat, or eyes. May aggravate pre-existing respiratory problems (e.g. asthma, emphysema).

Long-term (chronic) overexposure to welding fumes can lead to siderosis (iron deposits in lung) and may affect pulmonary function. Manganese overexposure can affect the central nervous system, resulting in impaired speech and movement. Bronchitis and some lung fibrosis have been reported. Repeated exposure to fluorides may cause excessive calcification of the bone and calcification of ligaments of the ribs, pelvis and spinal column. May cause skin rash. Titanium dioxide is listed by the IARC (International Agency for Research on Cancer) as a Group 2B carcinogen (possibly carcinogenic to humans based on animal studies). Respiratory exposure to the crystalline silica present in this welding electrode is not anticipated during normal use. Respiratory overexposure to airborne crystalline silica is known to cause silicosis, a form of disabling pulmonary fibrosis which can be progressive and may lead to death. Crystalline silica is on the IARC (International Agency for Research on Cancer) and NTP (National Toxicology Program) lists as posing a cancer risk to humans. WARNING: This product, when used for welding or cutting, produces fumes or gases which contain chemicals known to the State of California to cause birth defects and, in some cases, cancer. (California Health & Safety Code Section 25249.5 et seq.)

Arc Rays can injure eyes and burn skin. *Skin cancer has been reported.*
Electric Shock can kill. If welding must be performed in damp locations or with wet clothing, on metal structures or when in cramped positions such as sitting, kneeling or lying, or if there is a high risk of unavoidable or accidental contact with workpiece, use the following equipment: Semiautomatic DC Welder, DC Manual (Stick) Welder, or AC Welder with Reduced Voltage Control.

Emergency and First Aid Procedures: Call for medical aid. Employ first aid techniques recommended by the American Red Cross.
IF BREATHING IS DIFFICULT give oxygen. IF NOT BREATHING employ CPR (Cardiopulmonary Resuscitation) techniques.
IN CASE OF ELECTRICAL SHOCK, turn off power and follow recommended treatment. In all cases call a physician.

SECTION V - REACTIVITY DATA

Hazardous Decomposition Products: Welding fumes and gases cannot be classified simply. The composition and quantity of both are dependent upon the metal being welded, the process, procedure and electrodes used.

Other conditions which also influence the composition and quantity of the fumes and gases to which workers may be exposed include: coatings on the metal being welded (such as paint, plating, or galvanizing), the number of welders and the volume of the worker area, the quality and amount of ventilation, the position of the welder's head with respect to the fume plume, as well as the presence of contaminants in the atmosphere (such as chlorinated hydrocarbon vapors from cleaning and degreasing activities.)

When the electrode is consumed, the fume and gas decomposition products generated are different in percent and form from the ingredients listed in Section II. Decomposition products of normal operation include those originating from the volatilization, reaction, or oxidation of the materials shown in Section II, plus those from the base metal and coating, etc., as noted above.

Reasonably expected fume constituents of this product would include: Primarily iron oxide and fluorides; secondarily complex oxides of manganese, potassium, silicon and sodium.

Maximum fume exposure guideline for this product (based on manganese content) is 4.0 milligrams per cubic meter.

Gaseous reaction products may include carbon monoxide and carbon dioxide. Ozone and nitrogen oxides may be formed by the radiation from the arc.

Determine the composition and quantity of fumes and gases to which workers are exposed by taking an air sample from inside the welder's helmet if worn or in the worker's breathing zone. Improve ventilation if exposures are not below limits. See ANSI/AWS F1.1, F1.2, F1.3 and F1.5, available from the American Welding Society, 550 N.W. LeJeune Road, Miami, FL 33126.

SECTION VI AND VII
CONTROL MEASURES AND PRECAUTIONS FOR SAFE HANDLING AND USE

Read and understand the manufacturer's instruction and the precautionary label on the product. Request Lincoln Safety Publication E205. See American National Standard Z49.1, "Safety In Welding, Cutting and Allied Processes" published by the American Welding Society, 550 N.W. LeJeune Road, Miami, FL, 33126 (both available for free download at http://www.lincolnelectric.com/community/safety/) and OSHA Publication 2206 (29CFR1910), U.S. Government Printing Office, Superintendent of Documents, P.O. Box 371954, Pittsburgh, PA 15250-7954 for more details on many of the following:

Ventilation: Use enough ventilation, local exhaust at the arc, or both to keep the fumes and gases from the worker's breathing zone and the general area. Train the welder to keep his head out of the fumes. *Keep exposure as low as possible.*

Respiratory Protection: Use respirable fume respirator or air supplied respirator when welding in confined space or general work area when local exhaust or ventilation does not keep exposure below TLV.

Eye Protection: Wear helmet or use face shield with filter lens shade number 12 or darker. Shield others by providing screens and flash goggles.

Protective Clothing: Wear hand, head, and body protection which help to prevent injury from radiation, sparks and electrical shock. See Z49.1. At a minimum this includes welder's gloves and a protective face shield, and may include arm protectors, aprons, hats, shoulder protection, as well as dark substantial clothing. Train the welder not to permit electrically live parts or electrodes to contact skin or clothing or gloves if they are wet. Insulate from work and ground.

Disposal Information: Discard any product, residue, disposable container, or liner as ordinary waste in an environmentally acceptable manner according to Federal, State and Local Regulations unless otherwise noted. No applicable ecological information available.

Date:	11/17/06	MSDS No.:	US-M435-C
Trade Name:	Red Baron Manual Electrodes		
Sizes:	All		
Supersedes:	10/16/06		

MATERIAL SAFETY DATA SHEET

For Welding Consumables and Related Products

Conforms to Hazard Communication Standard 29CFR 1910.1200 Rev. October 1988

SECTION I - IDENTIFICATION

Manufacturer/ Supplier: The Lincoln Electric Company
22801 St. Clair Avenue
Cleveland, OH 44117-1199
(216) 481-8100

Product Type: Covered Electrode

Products: *Red Baron* 308/308H MR, 308L MR, 308/308L-V MR, 309/309L MR, 310 MR, 309/309L-V MR, 316/316L MR, 316/316L-V MR, 347 MR

SECTION II - HAZARDOUS MATERIAL (1)

IMPORTANT!

This section covers the materials from which this product is manufactured. The fumes and gases produced during welding with the normal use of this product are covered by Section V; see it for industrial hygiene information.
CAS Number shown is representative for the ingredients listed. All ingredients listed may not be present in all sizes.
(1) The term "hazardous" in "Hazardous Materials" should be interpreted as a term required and defined in the Hazards Communication Standard and does not necessarily imply the existence of any hazard. All materials are listed on the TSCA inventory.

Ingredients:	CAS No.	Wt.%	TLV mg/m^3	PEL mg/m^3
Titanium dioxides (as Ti)*****	13463-67-7	10	10	15
Limestone and/or calcium carbonate	1317-65-3	10	10	15
Mineral silicates	1332-58-7	10	5**	5**
Silicates and other binders	1344-09-8	< 5	10*	10*
Chromium and chromium alloys or compounds (as Cr)*****	7440-47-3	< 5	0.5(b)	1.0(b)
Manganese and/or manganese alloys and compounds (as Mn)*****	7439-96-5	< 5	0.2	1.0(c)
Aluminum oxide and/or Bauxite*****	1344-28-1	< 5	10	15
Fluorides (as F)	7789-75-5	< 5	2.5	2.5
Niobium alloys (as Nb) (347 type only)	7440-03-1	1	10*	10*
Iron	7439-89-6	0.5	10*	10*
Iron oxides (as Fe)	65996-74-9	< 0.5	5	10
Nickel (metal)*****	7440-02-0	< 0.5	1.5	1
Molybdenum alloys (as Mo) (316 types only)	7439-98-7	< 0.5	10	10
Silicon and/or silicon alloys and compounds (as Si)	7440-21-3	< 0.5	10*	10*
Lithium compounds (as Li)	554-13-2	< 0.5	10*	10*
Stainless steel core wire		60-75		
Nominal core wire composition:				
Chromium*****	7440-47-3	20-26	0.5(b)	1.0(b)
Nickel*****	7440-02-0	10-21	1.5	1
Molybdenum (316 types only)	7439-98-7	2.5	10	10
Manganese*****	7439-96-5	2.0	0.2	1.0(c)
Iron	7439-89-6	bal.	10*	10*

Supplemental Information: (*) Not listed. Nuisance value maximum is 10 milligrams per cubic meter. PEL value for iron oxide is 10 milligrams per cubic meter. TLV value for iron oxide is 5 milligrams per cubic meter.

(**) As respirable dust.

(*****) Subject to the reporting requirements of Sections 311, 312, and 313 of the Emergency Planning and Community Right-to-Know Act of 1986 and of 40CFR 370 and 372.

(b) The OSHA PEL for chromium (VI) is 5 micrograms (0.005 milligrams) per cubic meter. The TLV for water soluble chromium (VI) is 0.05 milligrams per cubic meter and the TLV for insoluble chromium (VI) is 0.01 milligrams per cubic meter.

(c) Values are for manganese fume. STEL (Short Term Exposure Limit) is 3.0 milligrams per cubic meter. Values are those proposed by OSHA in 1989. Present PEL is 5.0 milligrams per cubic meter (ceiling value).

SECTION III - HAZARD DATA

Non Flammable; Welding arc and sparks can ignite combustibles and flammable products. See Z49.1 referenced in Section VI. Product is inert, no special handling or spill procedures required. Not regulated by DOT.

(CONTINUED ON SIDE TWO)

Product:	**Red Baron Manual Electrodes**
Date:	**11/17/06**

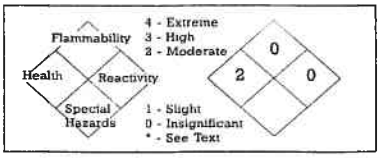

SECTION IV - HEALTH HAZARD DATA

Threshold Limit Value: The ACGIH recommended general limit for Welding Fume NOS - (Not Otherwise Specified) is 5 mg/m^3. ACGIH-1999 preface states that the TLV-TWA should be used as guides in the control of health hazards and should not be used as fine lines between safe and dangerous concentrations. See Section V for specific fume constituents which may modify this TLV. Threshold Limit Values are figures published by the American Conference of Government Industrial Hygienists. Units are milligrams per cubic meter of air.

Effects of Overexposure: Electric arc welding may create one or more of the following health hazards:
Fumes and Gases can be dangerous to your health. Common entry is by inhalation. Other possible routes are skin contact and ingestion.

Short-term (acute) overexposure to welding fumes may result in discomfort such as metal fume fever, dizziness, nausea, or dryness or irritation of nose, throat, or eyes. May aggravate pre-existing respiratory problems (e.g. asthma, emphysema). Chromates present in the fume have been known to cause severe irritation of the bronchial tubes and lungs. Asthma has been reported. Exposure to extremely high levels of fluorides can cause abdominal pain, diarrhea, muscular weakness, and convulsions. In extreme cases it can cause loss of consciousness and death.

Long-term (chronic) overexposure to welding fumes can lead to siderosis (iron deposits in lung) and may affect pulmonary function. Manganese overexposure can affect the central nervous system, resulting in impaired speech and movement. Bronchitis and some lung fibrosis have been reported. Chromates may cause ulceration and perforation of the nasal septum. Liver damage and allergic reactions, including skin rash, have been reported. Chromates contain the hexavalent form of chromium. Hexavalent chromium and its compound are on the IARC (International Agency for Research on Cancer) and NTP (National Toxicology Program) lists as posing a cancer risk to humans. Repeated exposure to fluorides may cause excessive calcification of the bone and calcification of ligaments of the ribs, pelvis and spinal column. May cause skin rash. Nickel and its compounds are on the IARC (International Agency for Research on Cancer) and NTP (National Toxicology Program) lists as posing a cancer risk to humans. Nickel compounds are skin sensitizers with symptoms usually occurring after repeated exposure - ranging from a slight itch to severe dermatitis. WARNING: This product contains or produces a chemical known to the State of California to cause cancer and birth defects (or other reproductive harm). (California Health & Safety Code Section 25249.5 et seq.)

Arc Rays can injure eyes and burn skin. *Skin cancer has been reported.*
Electric Shock can kill. If welding must be performed in damp locations or with wet clothing, on metal structures or when in cramped positions such as sitting, kneeling or lying, or if there is a high risk of unavoidable or accidental contact with workpiece, use the following equipment: Semiautomatic DC Welder, DC Manual (Stick) Welder, or AC Welder with Reduced Voltage Control.

Emergency and First Aid Procedures: Call for medical aid. Employ first aid techniques recommended by the American Red Cross.
IF BREATHING IS DIFFICULT give oxygen. IF NOT BREATHING employ CPR (Cardiopulmonary Resuscitation) techniques.
IN CASE OF ELECTRICAL SHOCK, turn off power and follow recommended treatment. In all cases call a physician.

SECTION V - REACTIVITY DATA

Hazardous Decomposition Products: Welding fumes and gases cannot be classified simply. The composition and quantity of both are dependent upon the metal being welded, the process, procedure and electrodes used.

Other conditions which also influence the composition and quantity of the fumes and gases to which workers may be exposed include: coatings on the metal being welded (such as paint, plating, or galvanizing), the number of welders and the volume of the worker area, the quality and amount of ventilation, the position of the welder's head with respect to the fume plume, as well as the presence of contaminants in the atmosphere (such as chlorinated hydrocarbon vapors from cleaning and degreasing activities.)

When the electrode is consumed, the fume and gas decomposition products generated are different in percent and form from the ingredients listed in Section II. Decomposition products of normal operation include those originating from the volatilization, reaction, or oxidation of the materials shown in Section II, plus those from the base metal and coating, etc., as noted above.

Reasonably expected fume constituents of this product would include: Primarily iron oxide, potassium oxide and fluorides; secondarily complex oxides of aluminum, calcium, chromium, manganese, nickel, silicon, sodium and titanium.

Maximum fume exposure guideline for this product (based on Cr (VI) content) is 0.1 milligrams per cubic meter.

Keep exposure as low as possible. Indoors, use local exhaust; outdoors, a respirator may be required.

Gaseous reaction products may include carbon monoxide and carbon dioxide. Ozone and nitrogen oxides may be formed by the radiation from the arc.

Determine the composition and quantity of fumes and gases to which workers are exposed by taking an air sample from inside the welder's helmet if worn or in the worker's breathing zone. Improve ventilation if exposures are not below limits. See ANSI/AWS F1.1, F1.2, F1.3 and F1.5, available from the American Welding Society, 550 N.W. LeJeune Road, Miami, FL 33126.

SECTION VI AND VII
CONTROL MEASURES AND PRECAUTIONS FOR SAFE HANDLING AND USE

Read and understand the manufacturer's instruction and the precautionary label on the product. Request Lincoln Safety Publication E205. See American National Standard Z49.1, "Safety In Welding, Cutting and Allied Processes" published by the American Welding Society, 550 N.W. LeJeune Road, Miami, FL, 33126 (both available for free download at http://www.lincolnelectric.com/community/safety/) and OSHA Publication 2206 (29CFR1910), U.S. Government Printing Office, Superintendent of Documents, P.O. Box 371954, Pittsburgh, PA 15250-7954 for more details on many of the following:

Ventilation: Use enough ventilation, local exhaust at the arc, or both to keep the fumes and gases from the worker's breathing zone and the general area. Train the welder to keep his head out of the fumes. *Keep exposure as low as possible.*

Respiratory Protection: Use respirable fume respirator or air supplied respirator when welding in confined space or general work area when local exhaust or ventilation does not keep exposure below TLV.

Eye Protection: Wear helmet or use face shield with filter lens shade number 12 or darker. Shield others by providing screens and flash goggles.

Protective Clothing: Wear hand, head, and body protection which help to prevent injury from radiation, sparks and electrical shock. See Z49.1. At a minimum this includes welder's gloves and a protective face shield, and may include arm protectors, aprons, hats, shoulder protection, as well as dark substantial clothing. Train the welder not to permit electrically live parts or electrodes to contact skin . . . or clothing or gloves if they are wet. Insulate from work and ground.

Disposal Information: Discard any product, residue, disposable container, or liner as ordinary waste in an environmentally acceptable manner according to Federal, State and Local Regulations unless otherwise noted. No applicable ecological information available.

Date:	7/2/2010	MSDS No.:	US-CW307
Trade Name:	Outershield 71M		
Sizes:	All		
Supersedes:	8/1/2008		

MATERIAL SAFETY DATA SHEET

For Welding Consumables and Related Products

Conforms to Hazard Communication Standard 29CFR 1910.1200 Rev. October 1988

SECTION I - IDENTIFICATION

Manufacturer/ Supplier: The Lincoln Electric Company
22801 St. Clair Avenue
Cleveland, OH 44117-1199
(216) 481-8100

Product Type: Flux Cored Electrode

Classification: AWS E71T-1CJ H8, E71T-1MJ H8, E71T-9CJ H8, E71T-9MJ H8

SECTION II - HAZARDOUS MATERIAL (1)

IMPORTANT!

This section covers the materials from which this product is manufactured. The fumes and gases produced during welding with the normal use of this product are covered by Section V; see it for industrial hygiene information.
CAS Number shown is representative for the ingredients listed. All ingredients listed may not be present in all sizes.
(1) The term "hazardous" in "Hazardous Materials" should be interpreted as a term required and defined in the Hazards Communication Standard and does not necessarily imply the existence of any hazard. All materials are listed on the TSCA inventory.

Ingredients:	CAS No.	Wt.%	TLV mg/m^3	PEL mg/m^3
Titanium dioxides	13463-67-7	10	10	15
Iron	7439-89-6	< 5	10*	15*
Manganese and/or manganese alloys and compounds (as Mn)*****	7439-96-5	< 5	0.2	5 (c)
Mineral silicates	1332-58-7	1	5**	5**
Magnesite	1309-48-4	< 0.5	10*	15
Quartz	14808-60-7	< 0.5	#0.05**	#0.1**
Boron alloys (as B)	11108-67-1	< 0.5	10*	15*
Silicon and/or silicon alloys and compounds (as Si)	7440-21-3	< 0.5	10*	15*
Carbon steel tube	7439-89-6	85	10*	15*

Supplemental Information:

(*) Not listed. The OSHA PEL for nuisance particles is 15 milligrams per cubic meter. The ACGIH guideline for total particulate is 10 milligrams per cubic meter. PEL value for iron oxide is 10 milligrams per cubic meter. TLV value for iron oxides is 5 milligrams per cubic meter.

(**) As respirable dust.

(*****) Subject to the reporting requirements of Sections 311, 312, and 313 of the Emergency Planning and Community Right-to-Know Act of 1986 and of 40CFR 370 and 372.

(c) Value is for manganese fume. Present PEL is 5 milligrams per cubic meter (ceiling value). Values proposed by OSHA in 1989 were 1.0 milligrams per cubic meter TWA and 3.0 milligrams per cubic meter STEL (Short Term Exposure Limit).

(#) Crystalline silica (quartz) is on the IARC (International Agency for Research on Cancer) and NTP (National Toxicology Program) lists as posing a carcinogenic risk to humans.

SECTION III - HAZARD DATA

Non Flammable; Welding arc and sparks can ignite combustibles and flammable products. See Z49.1 referenced in Section VI.
Product is inert, no special handling or spill procedures required. Not regulated by DOT.

(CONTINUED ON SIDE TWO)

Product:	**Outershield 71M**
Date:	**7/2/2010**

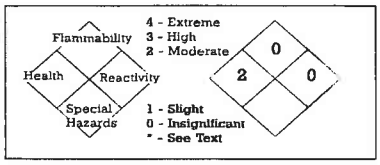

SECTION IV - HEALTH HAZARD DATA

Threshold Limit Value: The ACGIH recommended general limit for Welding Fume NOS - (Not Otherwise Specified) is 5 mg/m^3. ACGIH-1999 preface states that the TLV-TWA should be used as guides in the control of health hazards and should not be used as fine lines between safe and dangerous concentrations. See Section V for specific fume constituents which may modify this TLV. Threshold Limit Values are figures published by the American Conference of Government Industrial Hygienists. Units are milligrams per cubic meter of air.

Effects of Overexposure: Electric arc welding may create one or more of the following health hazards:
Fumes and Gases can be dangerous to your health. Common entry is by inhalation. Other possible routes are skin contact and ingestion.

Short-term (acute) overexposure to welding fumes may result in discomfort such as metal fume fever, dizziness, nausea, or dryness or irritation of nose, throat, or eyes. May aggravate pre-existing respiratory problems (e.g. asthma, emphysema).

Long-term (chronic) overexposure to welding fumes can lead to siderosis (iron deposits in lung) and may affect pulmonary function. Manganese overexposure can affect the central nervous system, resulting in impaired speech and movement. Bronchitis and some lung fibrosis have been reported. Respiratory exposure to the crystalline silica present in this welding electrode is not anticipated during normal use. Respiratory overexposure to airborne crystalline silica is known to cause silicosis, a form of disabling pulmonary fibrosis which can be progressive and may lead to death. Crystalline silica is on the IARC (International Agency for Research on Cancer) and NTP (National Toxicology Program) lists as posing a cancer risk to humans. WARNING: This product, when used for welding or cutting, produces fumes or gases which contain chemicals known to the State of California to cause birth defects and, in some cases, cancer. (California Health & Safety Code Section 25249.5 et seq.)

Arc Rays can injure eyes and burn skin. ***Skin cancer has been reported.***
Electric Shock can kill. If welding must be performed in damp locations or with wet clothing, on metal structures or when in cramped positions such as sitting, kneeling or lying, or if there is a high risk of unavoidable or accidental contact with workpiece, use the following equipment: Semiautomatic DC Welder, DC Manual (Stick) Welder, or AC Welder with Reduced Voltage Control.

Emergency and First Aid Procedures: Call for medical aid. Employ first aid techniques recommended by the American Red Cross.
IF BREATHING IS DIFFICULT give oxygen. IF NOT BREATHING employ CPR (Cardiopulmonary Resuscitation) techniques.
IN CASE OF ELECTRICAL SHOCK, turn off power and follow recommended treatment. In all cases call a physician.

SECTION V - REACTIVITY DATA

Hazardous Decomposition Products: Welding fumes and gases cannot be classified simply. The composition and quantity of both are dependent upon the metal being welded, the process, procedure and electrodes used.

Other conditions which also influence the composition and quantity of the fumes and gases to which workers may be exposed include: coatings on the metal being welded (such as paint, plating, or galvanizing), the number of welders and the volume of the worker area, the quality and amount of ventilation, the position of the welder's head with respect to the fume plume, as well as the presence of contaminants in the atmosphere (such as chlorinated hydrocarbon vapors from cleaning and degreasing activities.)

When the electrode is consumed, the fume and gas decomposition products generated are different in percent and form from the ingredients listed in Section II. Decomposition products of normal operation include those originating from the volatilization, reaction, or oxidation of the materials shown in Section II, plus those from the base metal and coating, etc., as noted above.

Reasonably expected fume constituents of this product would include: Primarily iron oxides; secondarily fluorides and complex oxides of manganese, potassium, silicon, sodium and titanium..

Maximum fume exposure guideline for this product (based on manganese content) is 1.5 milligrams per cubic meter.

Gaseous reaction products may include carbon monoxide and carbon dioxide. Ozone and nitrogen oxides may be formed by the radiation from the arc.

Determine the composition and quantity of fumes and gases to which workers are exposed by taking an air sample from inside the welder's helmet if worn or in the worker's breathing zone. Improve ventilation if exposures are not below limits. See ANSI/AWS F1.1, F1.2, F1.3 and F1.5, available from the American Welding Society, 550 N.W. LeJeune Road, Miami, FL 33126.

SECTION VI AND VII
CONTROL MEASURES AND PRECAUTIONS FOR SAFE HANDLING AND USE

Read and understand the manufacturer's instruction and the precautionary label on the product. Request Lincoln Safety Publication E205. See American National Standard Z49.1, "Safety In Welding, Cutting and Allied Processes" published by the American Welding Society, 550 N.W. LeJeune Road, Miami, FL, 33126 (both available for free download at http://www.lincolnelectric.com/community/safety/) and OSHA Publication 2206 (29CFR1910), U.S. Government Printing Office, Superintendent of Documents, P.O. Box 371954, Pittsburgh, PA 15250-7954 for more details on many of the following:

Ventilation: Use enough ventilation, local exhaust at the arc, or both to keep the fumes and gases from the worker's breathing zone and the general area. Train the welder to keep his head out of the fumes. ***Keep exposure as low as possible.***

Respiratory Protection: Use respirable fume respirator or air supplied respirator when welding in confined space or general work area when local exhaust or ventilation does not keep exposure below TLV.

Eye Protection: Wear helmet or use face shield with filter lens shade number 12 or darker. Shield others by providing screens and flash goggles.

Protective Clothing: Wear hand, head, and body protection which help to prevent injury from radiation, sparks and electrical shock. See Z49.1. At a minimum this includes welder's gloves and a protective face shield, and may include arm protectors, aprons, hats, shoulder protection, as well as dark substantial clothing. Train the welder not to permit electrically live parts or electrodes to contact skin or clothing or gloves if they are wet. Insulate from work and ground.

Disposal Information: Discard any product, residue, disposable container, or liner as ordinary waste in an environmentally acceptable manner according to Federal, State and Local Regulations unless otherwise noted. No applicable ecological information available.

WELDING PRODUCTS
MUREX®
FILLER METAL PRODUCTS

Date:	2/20/07	MSDS No.:	US-W203M
Trade Name:	Murematic S4 Plus		
Sizes:	All		
Supersedes:	2/3/00		

MATERIAL SAFETY DATA SHEET

For Welding Consumables and Related Products

Conforms to Hazard Communication Standard 29CFR 1910.1200 Rev. October 1988

SECTION I - IDENTIFICATION

Manufacturer/ Supplier: The Lincoln Electric Company
22801 St. Clair Avenue
Cleveland, OH 44117-1199
(216) 481-8100

Product Type: Carbon Steel Electrode

Classification: AWS ER70S-4

SECTION II - HAZARDOUS MATERIAL (1)

IMPORTANT!

This section covers the materials from which this product is manufactured. The fumes and gases produced during welding with the normal use of this product are covered by Section V; see it for industrial hygiene information.
CAS Number shown is representative for the ingredients listed.
(1) The term "hazardous" in "Hazardous Materials" should be interpreted as a term required and defined in the Hazards Communication Standard and does not necessarily imply the existence of any hazard. All materials are listed on the TSCA inventory.

Ingredients:	CAS No.	Wt.%	TLV mg/m^3	PEL mg/m^3
Carbon steel wire		100	10*	10*
Nominal wire composition:				
Total manganese *****	7439-96-5	< 2.0	0.2	1.0(c)
Total copper including plated coating *****	7440-50-8	< 0.5	0.2(a)	0.1(a)
Iron	7439-89-6	bal.	10*	10*

Supplemental Information: (*) Not listed. Nuisance value maximum is 10 milligrams per cubic meter. PEL value for iron oxide is 10 milligrams per cubic meter. TLV value for iron oxide is 5 milligrams per cubic meter.

(*****) Subject to the reporting requirements of Sections 311, 312, and 313 of the Emergency Planning and Community Right-to-Know Act of 1986 and of 40CFR 370 and 372.

(c) Values are for manganese fume. STEL (Short Term Exposure Limit) is 3.0 milligrams per cubic meter. Values are those proposed by OSHA in 1989. Present PEL is 5.0 milligrams per cubic meter (ceiling value).

(a) Values are for copper fume.

SECTION III - HAZARD DATA

Non Flammable; Welding arc and sparks can ignite combustibles and flammable products. See Z49.1 referenced in Section VI. Product is inert, no special handling or spill procedures required. Not regulated by DOT.

(CONTINUED ON SIDE TWO)

Product:	**Murematic S4 Plus**
Date:	**2/20/07**

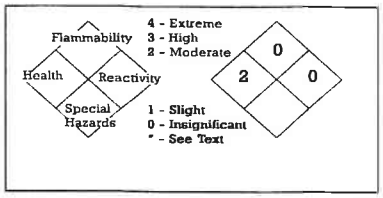

SECTION IV - HEALTH HAZARD DATA

Threshold Limit Value: The ACGIH recommended general limit for Welding Fume NOS - (Not Otherwise Specified) is 5 mg/m^3. ACGIH-1999 preface states that the TLV-TWA should be used as guides in the control of health hazards and should not be used as fine lines between safe and dangerous concentrations. See Section V for specific fume constituents which may modify this TLV. Threshold Limit Values are figures published by the American Conference of Government Industrial Hygienists. Units are milligrams per cubic meter of air.

Effects of Overexposure: Electric arc welding may create one or more of the following health hazards:
Fumes and Gases can be dangerous to your health. Common entry is by inhalation. Other possible routes are skin contact and ingestion.

Short-term (acute) overexposure to welding fumes may result in discomfort such as metal fume fever, dizziness, nausea, or dryness or irritation of nose, throat, or eyes. May aggravate pre-existing respiratory problems (e.g. asthma, emphysema).

Long-term (chronic) overexposure to welding fumes can lead to siderosis (iron deposits in lung) and may affect pulmonary function. Manganese overexposure can affect the central nervous system, resulting in impaired speech and movement. Bronchitis and some lung fibrosis have been reported. WARNING: This product, when used for welding or cutting, produces fumes or gases which contain chemicals known to the State of California to cause birth defects and, in some cases, cancer. (California Health & Safety Code Section 25249.5 et seq.)

Arc Rays can injure eyes and burn skin. Skin cancer has been reported.
Electric Shock can kill. If welding must be performed in damp locations or with wet clothing, on metal structures or when in cramped positions such as sitting, kneeling or lying, or if there is a high risk of unavoidable or accidental contact with workpiece, use the following equipment: Semiautomatic DC Welder, DC Manual (Stick) Welder, or AC Welder with Reduced Voltage Control.

Emergency and First Aid Procedures: Call for medical aid. Employ first aid techniques recommended by the American Red Cross.
IF BREATHING IS DIFFICULT give oxygen. IF NOT BREATHING employ CPR (Cardiopulmonary Resuscitation) techniques.
IN CASE OF ELECTRICAL SHOCK, turn off power and follow recommended treatment. In all cases call a physician.

SECTION V - REACTIVITY DATA

Hazardous Decomposition Products: Welding fumes and gases cannot be classified simply. The composition and quantity of both are dependent upon the metal being welded, the process, procedure and electrodes used.

Other conditions which also influence the composition and quantity of the fumes and gases to which workers may be exposed include: coatings on the metal being welded (such as paint, plating, or galvanizing), the number of welders and the volume of the worker area, the quality and amount of ventilation, the position of the welder's head with respect to the fume plume, as well as the presence of contaminants in the atmosphere (such as chlorinated hydrocarbon vapors from cleaning and degreasing activities.)

When the electrode is consumed, the fume and gas decomposition products generated are different in percent and form from the ingredients listed in Section II. Decomposition products of normal operation include those originating from the volatilization, reaction, or oxidation of the materials shown in Section II, plus those from the base metal and coating, etc., as noted above.

Reasonably expected fume constituents of this product would include: Primarily iron oxide; secondarily complex oxides of copper, manganese and silicon when used with gas shielding.

Maximum fume exposure guideline for this product (based on manganese content) is 2.0 milligrams per cubic meter.

Gaseous reaction products may include carbon monoxide and carbon dioxide. Ozone and nitrogen oxides may be formed by the radiation from the arc.

Determine the composition and quantity of fumes and gases to which workers are exposed by taking an air sample from inside the welder's helmet if worn or in the worker's breathing zone. Improve ventilation if exposures are not below limits. See ANSI/AWS F1.1, F1.2, F1.3 and F1.5, available from the American Welding Society, 550 N.W. LeJeune Road, Miami, FL 33126.

SECTION VI AND VII
CONTROL MEASURES AND PRECAUTIONS FOR SAFE HANDLING AND USE

Read and understand the manufacturer's instruction and the precautionary label on the product. Request Lincoln Safety Publication E205. See American National Standard Z49.1, "Safety In Welding, Cutting and Allied Processes" published by the American Welding Society, 550 N.W. LeJeune Road, Miami, FL, 33126 (both available for free download at http://www.lincolnelectric.com/community/safety/) and OSHA Publication 2206 (29CFR1910), U.S. Government Printing Office, Superintendent of Documents, P.O. Box 371954, Pittsburgh, PA 15250-7954 for more details on many of the following:

Ventilation: Use enough ventilation, local exhaust at the arc, or both to keep the fumes and gases from the worker's breathing zone and the general area. Train the welder to keep his head out of the fumes. Keep exposure as low as possible.

Respiratory Protection: Use respirable fume respirator or air supplied respirator when welding in confined space or general work area when local exhaust or ventilation does not keep exposure below TLV.

Eye Protection: Wear helmet or use face shield with filter lens shade number 12 or darker. Shield others by providing screens and flash goggles.

Protective Clothing: Wear hand, head, and body protection which help to prevent injury from radiation, sparks and electrical shock. See Z49.1. At a minimum this includes welder's gloves and a protective face shield, and may include arm protectors, aprons, hats, shoulder protection, as well as dark substantial clothing. Train the welder not to permit electrically live parts or electrodes to contact skin . . . or clothing or gloves if they are wet. Insulate from work and ground.

Disposal Information: Discard any product, residue, disposable container, or liner as ordinary waste in an environmentally acceptable manner according to Federal, State and Local Regulations unless otherwise noted. No applicable ecological information available.

Pinnacle Alloys

Pinnacle Alloys are products of SOWESCO

MATERIAL SAFETY DATA SHEET (MSDS)

For Welding Consumables and Related Products
Conforms to OSHA Hazard Communication Standard 29CFR 1910.1200
Standard Must Be Consulted for Specific Requirements

Section I – Identification

Supplier : Sowesco I, Ltd	Telephone Number: 800-856-9353
Address: 9384 WALLISVILLE ROAD, HOUSTON, TX 77013	Emergency Number: 713-688-9353
Classifications: E209, E219, E308, E309, E310, E312, E316, E317, E320, E330, E347, E385, 410, E430, E630, E16-8-2, E2209, E2553 *May be prefixed by E , may be suffixed by -15, -16, or -17. May be suffixed by: "L" designates low carbon, "Si" designates High silicon, "H" designated High Carbon, "Cb" designates Columbium, "LR" designates Low Residual, "Mo" designates Molybdenum, "NiMo" designates Nickel/Molybdenum, "MoL" designates Molybdenum/Low Carbon"	Specifications: AWS A5.4

Section II – Hazardous Materials*

IMPORTANT: This section covers the materials for which the product was manufactured. The fumes and gases produced during welding with the normal use of this product are covered.
The term "Hazardous Materials" should be interpreted as a term required and defined in OSHA HAZARD COMMUNICATION STANDARD (29 CFR1910.1200); however, the use of this term does not necessarily imply the existence of any hazard.

Flux or other Ingredients	% Of Weight	CAS No.	Exposure Limit (mg/m)	
			OSHA PEL	ACGIH TLV
Chromium (Cr) a , c	4.0 – 29.0	7440-47-3	1	0.5
Nickel (Ni) a , c	.04 – 37.0	7440-02-0	1	1
Molybdenum (Mo) c	0.35 – 5.2	7439-98-7	15	10
Columbium (Cb) plus Tantalum (Ta) c	≤ 1.00	7440-03-1	1	0.5
Manganese (Mn) c	0.25 – 13.5	7439-96-5	5*	1* F
Copper (Cu) c	0.6 – 4.0	7440-50-8	1 D	2**
Iron (Fe) a, c	Balance	7439-89-6	5 / 10 OF	5 OF
Siliscon, (Si) a, c	.015 - .03	7440-21-3	5 R / 5 OF	10 / 3 OF / 20**

a
=Exposure limits for oxides, dust, fume and mists where applicable F=Fume OF= Oxide Fume **=Short term exposure limit c = "WARNING: This product contains or produces a chemical known to the State Of California to cause cancer or birth defects (or other reproductive harm). (California Health and Safety Code 25249.5 et seq.)" * = Ceiling Limit
**=Short term exposure limit

Section III - Physical

Welding consumables applicable to this sheet as shipped consist of odorless, solid rods or wire, which have a metallic luster. As shipped, these products are nonflammable, non-explosive, non-reactive, and non-hazardous.

Section IV – Fire and Explosion Hazard

These items are not reactive, flammable, or explosive and essentially not hazardous at ambient temperatures. Welding arcs and sparks can ignite combustibles and flammable products. If involved in a fire, these products may generate irritating aluminum fumes and a variety of metal oxides. Emergency responders must wear personal protection equipment suitable for the situation. Use the extinguishing media recommended for the burning materials and fire situation. See

ANSIZ49.1 "*Safety in Welding and Cutting*" and "*Safe Practices*" Code: SP, published by the American Welding Society, P.O.

Section V – Health Hazard Data

Welding fumes and gases can be dangerous to your health. Electric shock can kill you. Arc says can injure eyes and burn skin. Noise can damage hearing.

Route of overexposure: The primary route of entry of the decomposition products is by inhalation. Skin contact, eye contact, and ingestion are possible.

Effects of Acute (Short-Term) Overexposure: Short-term (acute) overexposure to the gases, fumes, and dusts may include irritation of the eyes, lungs, nose, and throat. Some toxic gases associated with welding may cause pulmonary

edema, asphyxiation, and death. Acute overexposure may include signs and symptoms such as watery eyes, nose and throat irritation, headache, dizziness, difficulty in breathing, frequent coughing, or chest pain. The presence of chromium/chromate in fume can cause irritation of nasal membranes and skin. The presence of nickel compounds in fume can cause metallic taste, nausea, tightness of chest, fever, and allergic reaction.

Pre-existing Medical Conditions Aggravated by Overexposure: Individuals with allergies or impaired respiratory function may have symptoms worsened by exposure to welding fumes.

Effects of Chronic (Long-Term) Overexposure: Long-term (Chronic) overexposure to air contaminants may lead to their accumulation in the lungs, a condition which may be seen as dense areas on chest X-rays. The severity of the change is proportional to the length of exposure. The changes seen are not necessarily associated with symptoms or signs of reduced lung function or disease. In addition, the changes on X-rays may be caused by non-work factors such as smoking, etc. Nickel and chromium are considered carcinogenic. Long term overexposure to nickel fumes may also cause pulmonary fibrosis and edema. Overexposure to manganese compounds may affect the central nervous system, symptoms of which are languor, sleepiness, muscular weakness, emotional disturbances, and spastic gait.

Carcinogenic Assessment (NTP Annual Report, IARC Monographs, Other): Nickel and Chromium must be considered possible carcinogens under OSHA (29CFR1910.1200). IARC has indicated Nickel, Chromium and certain of their compounds are probably carcinogenic for humans. Exposure levels must be kept below those levels specified in Section II.

Warning: This product contains or produces a chemical known to the State of California to cause cancer and birth defects (or other reproductive harm). (California Health and Safety Code 25249.5 et seq.)

VI – Reactivity Data

Hazardous Decomposition Products: Welding fumes and gases cannot be classified simply. The composition and quantity of both are dependent upon the metal being welded, the process, procedure and welding consumables used. Other conditions which also influence the composition and quantity of the fumes and gases to which workers may be exposed include: coating on the metal being welded (i.e. paint, painting, galvanizing), the number of welders, the volume of the work area, the quality and the amount of ventilation, the position of the welders head with respect to the fume plume, as well as the presence of contaminants in the atmosphere (such as chlorinated hydrocarbon vapors from the cleaning and degreasing activities).

When an electrode is consumed, the fume and gas decomposition products generated are different in percent and form from the ingredients listed in Section II. Fume and gas decomposition, and not the ingredients in the electrode, are important. The concentration of a given fume or gas component may decrease or increase by many times the original concentration. Also, new compounds not in the electrodes may form. Decomposition products of normal operation include those originating from the volatilization, reaction or oxidation of the materials shown in Section II, plus those from the base metal coating, etc., as noted above.

Reasonable expected fume constituents of this product would include: Complex oxides of iron, manganese, silicon, chromium, nickel, columbium, molybdenum, copper, carbon dioxide, carbon monoxide, ozone and nitrogen oxides. Some products will also contain antimony, barium, molybdenum, aluminum, columbium, magnesium, strontium, tungsten, and or zirconium. Fume limit for chromium, nickel and or manganese may be reached before limit of 5 mg/m of general welding fumes is reached.
Most welding, even with primitive ventilation, does not produce exposures within the welding helmet above 5mg/m. That which does should be controlled.

Section VII – Spill or Leak Procedures

This product is not hazardous per 49 CFR 172.101 by the U.S. Department of Transportation.

Section VIII – Special Protection Information

Ventilation: Use enough ventilation, local exhaust at the arc (of flame), or both, to keep the fumes and gases below the PEL's, TLV's and STEL's in the workers breathing zone and general area. Train the employee to keep his head out of the fumes. See ANSI/ASC Z49.1 Section 5.

Respiratory Protection: Use respirable fume respirator or air- supplied respirator when welding, brazing or soldering in a confined space or where local exhaust or ventilation does not keep exposure within limits outlined in Section II.

Eye Protection: Arc Rays can injure your eyes. Wear helmet or face shield with filter lens of appropriate shade number. See ANSI/ASC Z49.1 Section 4.2. Provide protective screens and flash goggles, if necessary, to shield others.

Protective Clothing: Wear head and body protection, which help to prevent injury form radiation, sparks, flame and electrical shock. See ANSI Z49.1. At minimum this includes welder's gloves and a protective face shield, and may include arm protectors, aprons, hats, shoulder protection, as well as dark substantial clothing. Train the employee not to touch live electrical parts and to insulate him/herself from work and ground. Welders should not wear short sleeve shirts or short pants.

Waste Disposal Method: Prevent waste for contamination surrounding environment. Discard any product or residue in a disposable container or liner in an environmentally approved manner under full compliance with federal, state and local regulations.

Emergency First Aid: Remove from dust or fume exposure immediately and seek medical attention. If breathing has stopped perform artificial respiration and summon emergency medical aid

For other precautions or additional safety information on welding and cutting, see American Standard Z49.1-1980, *Safety in Welding and Cutting,* and the *Welding Handbook,* Volume 1, Chapter 9, Safe Practices in Welding and Cutting. Both Available from the American Welding Society, Inc. 550 N.W. Le Jeune Road, P.O. Box 351040, Miami, FL33135

Disclaimer of Liability

We believe that the information contained herein is current as of the date of this MSDS. As the condition or methods of use are beyond Sowesco LLC, does not assume any responsibility and expressly disclaim any liability for any use of this material. Information contained herein is believed to be true and accurate but all statements or suggestions are made without any warranty, expressed or implied, regarding the accuracy of the information, the hazard connected with the use of this material or the results to be obtained for use thereof. It is the user's obligation to determine the conditions of safe use of these products.

Special Development

UTP 85 FN

Nickel-Iron based electrode for cold welding of gray nodular casting iron.

Application Field

Nickel-Iron electrode for cold welding of all types of gray and nodular cast iron in the market, as well as the junction of gray cast iron and steel. Particularly indicated for the welding of nodular cast iron, and it may also be used for combined welding with UTP 8.

Welding Characteristics

The type of special coating allows a smooth and stable arch to be obtained, with low intensity currents; this leads to safe penetration to the base metal. The deposited material - applied in thin drops - presents an structure with high mechanic values and highly resistant to cracks; it has high yield and it be welded without slag removal.

Hardness: 200 HB

Chemical Analysis of the Deposited Metal (in %)

C	Fe	Ni
1.2	54.0	Rest

Type of Current: CC (+)

Machine Configuration

Electrode Ø mm	2.5 x 300	3.25 x 350	4.0 x 450
Current A	60 - 70	80 - 110	90 - 130

Welding Instructions

Carefully clean the area to be welded; remove the superficial scale and round up the edges. In compliance with the wall thickness, chamfer in U or double U. Use the least current the possible, maintaining the arch short with the electrode perpendicular to the work. Butter the flanks with straight chords which thickness should not exceed twice the electrode's diameter. The maximum length of the chord should not exceed ten times the electrode's diameter to avoid overheating. Carefully hammer the deposit. Re-lid the arch over the material already deposited, never over the base material. Maintain the arch at the end of each chord for scale filling.

WARNING:

The information presented herein is not a guarantee or certification for which we can be held legally responsible. These are offered to the Clients for appreciation, investigation and verification. This information may be altered without previous notice.

Material Safety Data Sheet
acc. to ISO/DIS 11014

Printing date 11/20/2006 Reviewed on 11/17/2006

1 Identification of substance

· **Product details**

· **Trade name: UTP 85 FN**
· **Application of the substance / the preparation** electrodes for welding

· **Manufacturer/Supplier:**
Boehler Thyssen Welding USA Inc.

PO Box 721678
HOUSTON, Texas 77272-1678

phone 281 499 1212
fax 281 261 7895

· **Information department:** QS department

*
2 Composition/Data on components

· **Chemical characterization**
· **Description:** Mixture of the substances listed below with nonhazardous additions.

· **Dangerous components:**			
7440-02-0	nickel	Xn, Xi; R 40-43	25-50%
1344-09-8	Silicic acid, sodium salt	Xn, Xi; R 22-37/38-41	2.5-10%
7782-42-5	Graphite		2.5-10%
7429-90-5	aluminium powder (pyrophoric)		≤2.5%
7789-75-5	calcium fluoride		≤2.5%

· **Additional information:**
Warning: This product contains or produces a chemical known to the state of California to cause cancer.

*
3 Hazards identification

· **Hazard description:**
General: Different kinds of fume and dust occur during the welding and grinding process. Chromium-VI compounds and nickel oxides might occur, which are classified as carcinogenic. In addition irritant substances such as fluorides and manganese oxides as well as fine dusts (mostly iron oxides) occur. Health Hazards (acute and chronic) Welding electrodes and wires are non-hazardous solids at ambient temperature.
Actual exposure should be determined by monitoring the fume in the operator's breathing zone. Compounds of Chromium and Nickel in the fume should be considered possible carcinogens per OSHA29. CFR 1910. 1200. No clear association, however, has been established between Cr and Ni in welding fume and the development of cancer. Short term overexposure to welding fumes may result in discomfort such as metal fume fever, dizziness, nausea, or dryness or irritation of nose, throat or eyes and may aggravate pre-existing respiratory problems (e.g. asthma, emphysema). Exposure to extremely high levels of fluorides can cause abdominal pain, diarrhea, muscular weakness, and convulsions. In extreme cases it can cause loss of consciousness and death.
Long term overexposure to welding fumes can lead to siderosis (iron deposits in lung) and may affect pulmonary function.
Manganese overexposure can affect the central nervous system, resulting in impaired speech and movement. The primary entry route for welding fumes and gases is by inhalation. Bronchitis and some lung fibrosis habe been reported. Repeated exposure to fluorides may cause excessive calcification of

(Contd. on page 2)

Material Safety Data Sheet
acc. to ISO/DIS 11014

Printing date 11/20/2006 Reviewed on 11/17/2006

Trade name: UTP 85 FN

(Contd. of page 1)

the bone and calcification of ligaments of the ribs, pelvis and spinal column. May cause skin rash.
Overexposure to hexavalent chromium and nickel present in welding fume can present the risk of lung cancer, asthma and damage to the nose and skin.
Arc rays can injure eyes and burn skin. Electric shock can kill. Before use, read and understand the manufacturer's instructions, MSDS's and your employer's safety practices. Keep your head out of the fumes. Use enough ventilation, exhaust at the arc, or both, to keep fumes and gases from your breathing zone and the general area. Wear correct eye, ear and body protection. Do not touch live electrical parts. See American National Standard Z49.1, and OSHA Safety and Health Standards.
Carcinogenicity
Nickel: The International Agency for Research on Cancer indicates nickel refining and "certain nickel compounds" were cancer-causing, but could not state with certainly which forms of nickel may be carcinogenic. The National Toxicology Program lists nickel powder, nickel subsulfide, nickel oxide, nickelcarbonate, nickel carbonyl and nickelocene as substances "that may reasonably anticipated to be carcinogens". Because of this, the OSHA Hazard Communication Standard requires that everyone who manufactures or imports these substances or mixtures or alloys containing these substances must warn of a cancer hazard on their MSDS's and labels. This warning is mandated by OSHA even though studies have not demonstrated cancer risks associated with the use of nickel. Intramuscular injection and implantation of nickel powder produced localized tumors in rats and mice. Inhalation studies using animals showed no evidence of carcinogenicity.
Chromium: The International Agency for Research on Cancer and the National Toxicology Program indicates there is sufficient evidence for carcinogenicity of Chromium compounds both in humans and experimental animals. IARC notes that "the compounds responsible for the carcinogenic effect in humans cannot be specified". Studies with chromium metal and trivalent forms of chromium compounds have shown inadequate evidence for carcinogenicity in both animals and humans.
Crystalline silica: The National Toxicology Program indicates there is sufficient evidence for the carcinogenicity or respirable crystalline silica in experimental animals. Increases in incidence of lung cancers have been found in inhalation studies in rats. An IARC working group reported there is limited evidence for the carcinogenicity of crystalline silica in humans.
Other precautions: Electric shock from arc welding equipment can kill. When welding arc or torch flame may be a source of ignition of combustible.

· **Information pertaining to particular dangers for man and environment:** Not applicable.
· **Classification system:**
· **NFPA ratings (scale 0 - 4)**

Health = 0
Fire = 0
Reactivity = 0

· **HMIS-ratings (scale 0 - 4)**

Health = *0
Fire = 0
Reactivity = 0

4 First aid measures

· **General information:** No special measures required.
· **After inhalation:** Supply fresh air; consult doctor in case of complaints.
· **After skin contact:** If skin irritation continues, consult a doctor.

(Contd. on page 3)

Material Safety Data Sheet
acc. to ISO/DIS 11014

Printing date 11/20/2006 Reviewed on 11/17/2006

Trade name: UTP 85 FN

(Contd. of page 2)

· **After eye contact:** Rinse opened eye for several minutes under running water.
· **After swallowing:** If symptoms persist consult doctor.

5 Fire fighting measures

· **Suitable extinguishing agents:** Use fire fighting measures that suit the environment.
· **Protective equipment:** No special measures required.

6 Accidental release measures

· **Person-related safety precautions:** Not required.
· **Measures for environmental protection:** Do not allow to enter sewers/ surface or ground water.
· **Measures for cleaning/collecting:** Pick up mechanically.
· **Additional information:** No dangerous substances are released.

7 Handling and storage

· **Handling:**
· **Information for safe handling:** Prevent formation of dust.
· **Information about protection against explosions and fires:** No special measures required.

· **Storage:**
· **Requirements to be met by storerooms and receptacles:** No special requirements.
· **Information about storage in one common storage facility:** Not required.
· **Further information about storage conditions:** None.

*

8 Exposure controls and personal protection

· **Additional information about design of technical systems:**
Ventilation: Use enough ventilation, local exhaust at the arc, or both, to keep the fumes and gases from the worker's breathing zone and the general area. Train the welder to keep his head out of the fumes. Keep exposures as low as possible
Respiratory Protection: Use respirable fumes respirator or air supplied respirator when welding in confined space or where local exhaust or ventilation does not keep exposure below the recommended exposure limit.

· **Components with limit values that require monitoring at the workplace:**	
7440-02-0 nickel	
PEL	1 mg/m³
REL	0.015 mg/m³
TLV	1.5 I mg/m³
7782-42-5 Graphite	
PEL	15 mppcf mg/m³
REL	2.5* mg/m³ *Respirable dust
TLV	2 R mg/m³ All forms except graphite fibers

(Contd. on page 4)

Material Safety Data Sheet
acc. to ISO/DIS 11014

Printing date 11/20/2006 Reviewed on 11/17/2006

Trade name: UTP 85 FN

(Contd. of page 3)

471-34-1 calcium carbonate	
PEL	15*; 5** mg/m³ *Total dust **Respirable fraction
REL	10*; 5** mg/m³ *Total dust **Respirable fraction
TLV	10 mg/m³ (e)
7429-90-5 aluminium powder (pyrophoric)	
PEL	15*; 5** mg/m³ *Total dust **Respirable fraction
REL	10*; 5** mg/m³ Metal dust; *Total dust **Respirable fraction
TLV	10 mg/m³ Metal dust
7789-75-5 calcium fluoride	
PEL	2.5 mg/m³ as F
REL	2.5 mg/m³ as F
TLV	2.5,A4 mg/m³ as F; (q)

· **Additional information:** The lists that were valid during the creation were used as basis.

· **Personal protective equipment:**
· **General protective and hygienic measures:** Wash hands before breaks and at the end of work.
· **Breathing equipment:** Use suitable respiratory protective device in case of insufficient ventilation.
· **Protection of hands:** Heat protection gloves
· **Material of gloves** Leather gloves
· **Eye protection:**
Wear helmet or use face shield with filter lens. Provide protective screens and flash goggles, if necessary, to shield others. As a rule of thumb, start with a shade that is too dark to see the weld zone. Then go the next lighter shade which gives sufficient view of the weld zone.
· **Body protection:** Protective work clothing

9 Physical and chemical properties

· **General Information**	
Form:	Solid
Color:	Black
Odor:	Odorless
· **Change in condition**	
Melting point/Melting range:	Undetermined.
Boiling point/Boiling range:	Undetermined.
· **Flash point:**	Not applicable.
· **Auto igniting:**	Product is not selfigniting.

(Contd. on page 5)

Material Safety Data Sheet
acc. to ISO/DIS 11014

Printing date 11/20/2006 Reviewed on 11/17/2006

Trade name: UTP 85 FN

(Contd. of page 4)

· **Danger of explosion:**	Product does not present an explosion hazard.
· **Density:**	Not determined.
· **Solubility in / Miscibility with Water:**	Insoluble.

*

10 Stability and reactivity

· **Thermal decomposition / conditions to be avoided:**
No decomposition if used according to specifications.
· **Dangerous reactions** No dangerous reactions known.
· **Dangerous products of decomposition:**
Welding fumes and gases cannot be classified simply. The composition and quantity of both are dependent upon the metal being welded, and the process, procedures, and electrodes used. Other conditions which also influence the composition and quantity of the fumes and gases to which workers may be exposed include: coatings on the metal being welded (such as paint, plating, galvanising, or phosphate coatings on steels which would produce phosphine gas), the number of welders and the volume of the work area, the quality and amount of ventilation, the position of the welder's head with respect to the fume plume as well as the presence of contaminants in the atmosphere (such as chlorinated hydrocarbon vapours from cleaning and degreasing activities which may be decomposed by the arc into toxic gases such as phosgene).
When the electrode is consumed, the fume and gas decomposition products generated are different in percent and form from the ingredients listed in SECTION II. Fume and gas decomposition products, and not the ingredients in the electrode are important. The concentration of a given fume or gas component may decrease or increase by many times the original concentration in the electrode. Also, new compounds not in the electrodes may form. Decomposition products of normal operation include those originating from the volatilization, reaction, or oxidation of the materials shown in SECTION II, plus those from the base metal and coating, etc..., as noted above. Reasonably expected fume constituents of this product would include: Example for Carbon dioxide shielded flux-cored electrode (AWS 5.20 E70-T-1): Reasonably expected fume constituents of this product would include: primarily oxides of Iron; secondarily complex oxides of Manganese, Silicon, Titanium and Sodium. The present ACGIH TLV for Manganese, 0.2 mg/m3 will result in a significant reduction from the 5 mg/m3 general welding fume (NOC) level. Example for Stainless Steel covered electrodes (AWS 5.4): Reasonably expected fume constituents of this product would include: primarily fluorides and complex oxides of Iron and Silicon, secondarily complex oxides of Manganese, titanium, chromium, nickel, sodium and potassium.
The present 1995 OSHA PEL (Permissible Exposure Limit) for hexavalent Chromium (Cr +6) is 0.05 mg/m3 which will result in a significant reduction from the 5 mg/m3 general welding fume (NOC) level. The limit of 0.05 mg/m3 for hexavalent chromium from the decomposition products in these electrodes comes from the limit shown at the bottom of OSHA Table Z-2, which is for 0.1 mg of CrO3- which calculates to 0.05 mg of Cr+6/m3. It applies to soluble chromates of the types found in covered stainless electrode fumes. Reasonably expected gaseous constituents would include Carbon monoxide and Carbon dioxide. Ozone and nitrogen oxides may be formed by the radiation from the arc. One recommended way to determine the composition and quantity of fumes and gases to which workers are exposed is to take an air sample from inside the welder's helmet if worn or in the worker's breathing zone. See ANSI/AWS F1.1 and ANSI/AWS F1.2-1992

(Contd. on page 6)

Material Safety Data Sheet
acc. to ISO/DIS 11014

Printing date 11/20/2006 Reviewed on 11/17/2006

Trade name: UTP 85 FN

(Contd. of page 5)

*

11 Toxicological information

· **Acute toxicity:**

· LD/LC50 values that are relevant for classification:	
7440-02-0 nickel	
Intraperitoneal LD50	250 mg/kg (rat)

· **Primary irritant effect:**
· **on the skin:** No irritant effect.
· **on the eye:** No irritating effect.
· **Sensitization:** Sensitization possible through skin contact.
· **Additional toxicological information:**
Workers exposed to hexavalent chrome (Cr+6) are at an increased risk of developing lung cancer. It also possible that occupational exposure to (Cr+6) may result in asthma, and damage to the nasal epithelia and skin. To avoid any risk follow the requirements of the OSHA rule for hexavalent chromium published on February 28, 2006 in the U.S. Federal Register, pages:10099-10385 which established an 8-hour time-weighted average (TWA) exposure limit of 5 micrograms of hexavalent chrome per cubic meter of air (5 µg/m³). This is a considerable reduction from the previous PEL of 1 milligram per 10 cubic meters of air (1 mg/10 m³, or 100 µg/m³) reported as CrO3, which is equivalent to a limit of 52 µg/m³ as (Cr+6)). This rule also contains ancillary provisions for worker protection such as requirements for exposure determination, preferred exposure control methods, including a compliance alternative for a small sector for which the new PEL is infeasible, respiratory protection, protective clothing and equipment, hygiene areas and practices, medical surveillance, recordkeeping, and start-up dates that include four years for the implementation of engineering controls to meet the PEL.

12 Ecological information

· **General notes:**
Water hazard class 1 (Self-assessment): slightly hazardous for water
Do not allow undiluted product or large quantities of it to reach ground water, water course or sewage system.

13 Disposal considerations

· **Product:**
· **Recommendation:** Must be specially treated adhering to official regulations.

· **Uncleaned packagings:**
· **Recommendation:** Disposal must be made according to official regulations.

14 Transport information

· **DOT regulations:**
· **Hazard class:** -

· **Land transport ADR/RID (cross-border):**
· **ADR/RID class:** -

(Contd. on page 7)

Material Safety Data Sheet
acc. to ISO/DIS 11014

Printing date 11/20/2006 Reviewed on 11/17/2006

Trade name: UTP 85 FN

(Contd. of page 6)

· **Maritime transport IMDG:**
· **IMDG Class:** -
· **Marine pollutant:** No

· **Air transport ICAO-TI and IATA-DGR:**
· **ICAO/IATA Class:** -

· **Transport/Additional information:** Not dangerous according to the above specifications.

*
15 Regulations

· **Sara**

· **Section 355 (extremely hazardous substances):**
None of the ingredient is listed.

· **Section 313 (Specific toxic chemical listings):**

7440-02-0	nickel
7429-90-5	aluminium powder (pyrophoric)
1344-28-1	aluminium oxide
7439-96-5	manganese
7440-47-3	chromium
7440-50-8	copper

· **TSCA (Toxic Substances Control Act):**
All ingredients are listed.

· **Proposition 65**

· **Chemicals known to cause cancer:**

7440-02-0	nickel
7440-47-3	chromium

· **Chemicals known to cause reproductive toxicity for females:**
None of the ingredients is listed.

· **Chemicals known to cause reproductive toxicity for males:**
None of the ingredients is listed.

· **Chemicals known to cause developmental toxicity:**
None of the ingredients is listed.

· **Cancerogenity categories**

· **EPA (Environmental Protection Agency)**

7439-96-5	manganese	D
7440-50-8	copper	D

· **IARC (International Agency for Research on Cancer)**

7440-02-0	nickel	2B
7440-47-3	chromium	3
7631-86-9	silicon dioxide, chemically prepared	3

(Contd. on page 8)

Material Safety Data Sheet
acc. to ISO/DIS 11014

Printing date 11/20/2006 Reviewed on 11/17/2006

Trade name: UTP 85 FN

(Contd. of page 7)

· **NTP (National Toxicology Program)**		
7440-02-0	nickel	R

· **TLV (Threshold Limit Value established by ACGIH)**		
7440-02-0	nickel	A5
1344-28-1	aluminium oxide	A4
7440-47-3	chromium	A4

· **MAK (German Maximum Workplace Concentration)**		
7440-02-0	nickel	1
1344-28-1	aluminium oxide	2

· **NIOSH-Ca (National Institute for Occupational Safety and Health)**	
7440-02-0	nickel

· **OSHA-Ca (Occupational Safety & Health Administration)**
None of the ingredients is listed.

· **Product related hazard informations:**
The product is not subject to identification regulations according to directives on hazardous materials.

· **Hazard-determining components of labelling:**
nickel

· **National regulations:**

· **Water hazard class:** Water hazard class 1 (Self-assessment): slightly hazardous for water.

16 Other information

This information is based on our present knowledge. However, this shall not constitute a guarantee for any specific product features and shall not establish a legally valid contractual relationship.

· **Department issuing MSDS:** QS department
· **Contact:**
Ms. Monica Isenhart
phone +1-281-499 1212
· *** Data compared to the previous version altered.**

Böhler Thyssen
WELDING
Member of the BÖHLER-UDDEHOLM Group

MATERIAL SAFETY DATA SHEET

For welding consumables and related products

Conforms to Workplace Hazardous Materials Information System (WHMIS) Rev. Nov. 1988
May be used to comply with Osha's Hazard Communication Standard, 29 CFR 1910.1200. Standard must be consulted for specific requirements.

U.S. Department of Labour
Occupational Safety and Health Administration
(Non-Mandatory Form) Form Approved OMB No. 1218-0072

Maybe used to comply with **Council Directive 2001/58/EG** concerning **Council Directive 91/155/EEG** relating to the classification, packaging and labelling of dangerous substances, referenced in the Official Journal of the European Communities, **European Regulation L 314/38**

Blank spaces are not permitted. If any item is not applicable, or no information is available, the space must be marked to indicate that.

Section I – Identification

Product: **UTP ER309L**
Product Type: Rods and Wires for Gas Shielded Arc Welding

Suppliers name: **BÖHLER THYSSEN SCHWEISSTECHNIK DEUTSCHLAND GMBH**

Address: **UNIONSTRASSE 1, D-59067 HAMM**	Telephone number for information:	**Germany +49-2381-271-771**
Date prepared: 2006-08-08	Signature of preparer: Emergency number: Intoxication information centre	**Dr. H. Heuser** **0049/2381 - 271-02** **0049/30 - 19240**

Section II - Hazardous* Ingredients

Important: This section covers the materials from which this product is manufactured. The fumes and gases produced during normal use when welding with this product are covered by section V. Consult local authorities for acceptance exposure limits.
The term „Hazardous" in „Hazardous Ingredients" should be interpreted as a term required and defined in the OSHA Hazard Communication Standard (29 CFR Part 1910.1200) and does not necessarily imply the existence of any hazard, the same applies correspondingly to the elements provided with hazardous signs.

Ingredient	CAS#	OSHA PEL mg/m³	ACGIH TLV mg/m³	other limits recommended	approx. wt.-% (optional)
Wire or rod					
Aluminium (Al)	7429-90-5	TWA 5.0 respirable fraction TWA 15.0 total dust	TWA 10.0		**< 0.1**
Carbon (C)	7440-44-0	TWA 5.0 respirable fraction TWA15.0 total dust	TWA 10.0 inhalable fraction TWA 3.0 respirable fraction	inert	**< 0.1**
Chromium (Cr)	7440-47-3	TWA 1.0	TWA 0.5		**23 – 25**
Cobalt (Co)	7440-48-4	TWA 0.1	TWA 0.02 (BEI, as fume)		**< 0.3**
Copper (Cu)	7440-50-8	TWA 1.0	TWA 1.0 dusts & mists TWA 0.2 fume		**< 0.5**
Iron (Fe)	7439-89-6	TWA 10.0	TWA 5.0		**balance**
Manganese (Mn)	7439-96-5	TWA 5.0 ceiling	TWA 0.2		**1 – 3**
Molybdenum (Mo)	7439-98-7	TWA 5.0 soluble compounds	A3		**< 0.3**

		TWA 15.0 total dust			
Nickel (Ni)	7440-02-0	TWA 1.0	TWA 1.5		**13 – 14**
Silicon (Si)	**7440-21-3**	TWA 5.0 respirable fraction TWA 15.0 total dust	**TWA 10.0**		**< 1**
Titanium (Ti)	7440-32-6	TWA 15.0 total dust	TWA 10.0		**< 0.2**

* The term „Hazardous" in „Hazardous Ingredients" should be interpreted as a term required and defined in the OSHA Hazard Communication Standard (29 CFR Part 1910.1200) and does not necessarily imply the existence of any hazard.

A1 Listed by ACGIH as a Human Carcinogen
A2 Listed by ACGIH as a Suspected Human Carcinogen
A3 Listed by ACGIH as an Animal Carcinogen
C Listed by OSHA as a Human Carcinogen
N/R Not reported or listed
mppcf Million Particles per Cubic Foot
BEI Listed by ACGIH as a substance for which there are biological exposure indices

WARNING: This product contains or produces a chemical known to the state of California to cause cancer.
WARNING: This product contains or produces a chemical known to the state of California to cause birth defects or other reproductive harm.
IMPORTANT: This section covers the material from which this product is manufactured. The fumes and gases produced during welding with this product are covered by SECTION VI.

Section III - Physical and Chemical Characteristics

Boiling Point	**N/A**	Specific Gravity (H_20 = 1)	**N/A**
Vapour Pressure (mm Hg.)	**N/A**	Melting Point	**N/A**
Vapour Density (air = 1)	**N/A**	Evaporation Rate (Butyl Acetate = 1)	**N/A**
Solubility in Water	**insoluble**		
Appearance and Odour	**Solid wire, no specific odour**		

Section IV - Fire and Explosion Hazard Data

Flash Point (Method used)	Flammable Limits	LEL	UEL
non-flammable	**N/A**	**N/A**	**N/A**

Extinguishing Media **N/A**

Special fire fighting procedures: **N/A**

IMPORTANT! Product is non flammable! Welding arc and spark can ignite combustibles and flammables. Refer to ANSI/ASC Z 49.1-1983 Section 6 for fire prevention during the use of welding and allied products.

Unusual fire and explosion hazards:
N/A

Section V – Reactivity Data

Stability	Unstable	-	Conditions to avoid	**N/A**
	Stable	X		

Incompatibility (Materials to avoid): **N/A**

Hazardous Decomposition or By-products:

Important: Welding fumes and gases cannot be classified simply. The composition and quantity of both are dependent upon the metal being welded, and the process, procedures, and electrodes used. Other conditions which also influence the composition and quantity of the fumes and gases to which workers may be exposed include: coatings on the metal being welded (such as paint, plating, galvanising, or phosphate coatings on steels which would produce phosphine gas), the number of welders and the volume of the work area, the quality and amount of ventilation, the position of the welder's head with respect to the fume plume as well as the presence of contaminants in the atmosphere (such as chlorinated hydrocarbon vapours from cleaning and degreasing activities which may be

decomposed by the arc into toxic gases such as phosgene).

When the electrode is consumed, the fume and gas decomposition products generated are different in percent and form from the ingredients listed in SECTION II. Fume and gas decomposition products, and not the ingredients in the electrode are important. The concentration of a given fume or gas component may decrease or increase by many times the original concentration in the electrode. Also, new compounds not in the electrodes may form. Decomposition products of normal operation include those originating from the volatilization, reaction, or oxidation of the materials shown in SECTION II, plus those from the base metal and coating, etc..., as noted above.

Reasonably expected fume constituents of this product would include: Example for Carbon dioxide shielded flux-cored electrode (AWS 5.20 E70-T-1): Reasonably expected fume constituents of this product would include: primarily oxides of Iron; secondarily complex oxides of Manganese, Silicon, Titanium and Sodium. The present ACGIH TLV for Manganese, 0.1 mg/m³ will result in a significant reduction from the 5 mg/m³ general welding fume (NOC) level. Example for Stainless Steel covered electrodes (AWS 5.4): Reasonably expected fume constituents of this product would include: primarily fluorides and complex oxides of Iron and Silicon, secondarily complex oxides of Manganese, Titanium, Chromium, Nickel, Sodium and Potassium. **The present OSHA PEL (Permissible Exposure Limit) – published in the U.S. Federal Register 71, pages:10099-10385 – for hexavalent Chromium (Cr^{+6}) is 0.005 mg/m³ which will result in a significant reduction from the 5 mg/m³ general welding fume (NOC) level.** It applies to soluble chromates of the types found in covered stainless electrode fumes. Reasonably expected gaseous constituents would include Carbon monoxide and Carbon dioxide. Ozone and nitrogen oxides may be formed by the radiation from the arc. One recommended way to determine the composition and quantity of fumes and gases to which workers are exposed is to take an air sample from inside the welder's helmet if worn or in the worker's breathing zone. See ANSI/AWS F1.1 and ANSI/AWS F1.2-1992. **In order to determine and evaluation of the existing problem areas, the standards prEn 15011 – part 1, 4 can also be applied.**

Hazardous/Polymerisation	May occur	-	Conditions to avoid **N/A**
	Will not occur	X	

NFPA Chemical Hazard Label

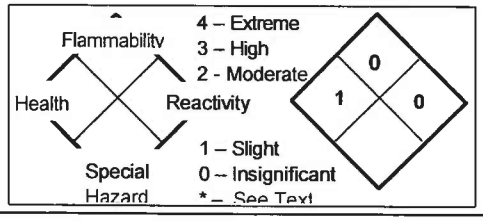

Section VI - Health Hazard Data

Route(s) of entry Inhalation (**) Skin (***) Ingestion **(not likely)**

**** Inhalation of fume.**

***** Rays from welding operations can injure eyes and burn skin.**

Health Hazards (acute and chronic)

Welding electrodes and wires are non-hazardous solids at ambient temperature. Actual exposure should be determined by monitoring the fume in the operator's breathing zone. Compounds of Chromium and Nickel in the fume should be considered possible carcinogens per OSHA29. CFR 1910. 1200. No clear association, however, has been established between Cr and Ni in welding fume and the development of cancer.

Short term overexposure to welding fumes may result in discomfort such as metal fume fever, dizziness, nausea, or dryness or irritation of nose, throat or eyes and may aggravate pre-existing respiratory problems (e.g. asthma, emphysema). See SECTIONS IV and VII. Exposure to extremely high levels of fluorides can cause abdominal pain, diarrhea, muscular weakness, and convulsions. In extreme cases it can cause loss of consciousness and death.to welding fumes may result in discomfort, dizziness, nausea, or dryness or irritation of the throat.

Long term overexposure to welding fumes can lead to siderosis (iron deposits in lung) and may affect pulmonary function. Manganese overexposure can affect the central nervous system, resulting in impaired speech and movement. The primary entry route for welding fumes and gases is by inhalation Bronchitis and some lung fibrosis have been reported. Repeated exposure to fluorides may cause excessive calcification of the bone and calcification of ligaments of the ribs, pelvis and spinal column. May cause skin rash.

Overexposure to hexavalent chromium and nickel present in welding fume can present the risk of lung cancer, asthma and damage to the nose and skin.

Arc Rays can injure eyes and burn skin. Electric Shock can kill. Before use, read and understand the manufacturer's instructions., MSDSs, and your employer's safety practices. Keep your head out of the fumes. Use enough ventilation,

exhaust at the arc, or both, to keep fumes and gases from your breathing zone and the general area. Wear correct eye, ear, and body protection.. Do not touch live electrical parts. See American National Standard Z49.1, and OSHA Safety and Health Standards.

Carcinogenicity

NICKEL: The International Agency for Research on Cancer indicates nickel refining and "certain nickel compounds" were cancer-causing, but could not state with certainty which forms of nickel may be carcinogenic. The National Toxicology Program lists nickel powder, nickel subsulfide, nickel oxide, nickel carbonate, nickel carbonyl and nickelocene as substances "that may reasonably anticipated to be carcinogens." Because of this, the OSHA Hazard Communication Standard requires that everyone who manufactures or imports these substances or mixtures or alloys containing these substances must warn of a cancer hazard on their MSDS's and labels. This warning is mandated by OSHA even though studies have not demonstrated cancer risks associated with the use of nickel. Intramuscular injection and implantation of nickel powder produced localized tumors in rats and mice. Inhalation studies using animals showed no evidence of carcinogenicity.

CHROMIUM: The International Agency for Research on Cancer and The National Toxicology Program indicates there is sufficient evidence for carcinogenicity of chromium compounds both in humans and experimental animals. IARC notes that "the compounds responsible for the carcinogenic effect in humans cannot be specified." Studies with chromium metal and trivalent forms of chromium compounds have shown inadequate evidence for carcinogenicity in both animals and humans.

Threshold Limit Value: The ACGIH recommended general limit for Welding Fume NOC – (Not Otherwise Classified) is 5 mg/m³. The TLV-TWA is the time weighted average concentration for a normal 8-hour workday and a 40 hour workweek, to which nearly all workers may be repeatedly exposed, day after day, without adverse effect. Limit Values are figures published by the American Conference of Government Inpoussièrerial Hygienists.

Workers exposed to hexavalent chrome (Cr^{+6}) are at an increased risk of developing lung cancer. It also possible that occupational exposure to (Cr^{+6}) may result in asthma, and damage to the nasal epithelia and skin. To avoid any risk follow the requirements of the OSHA rule for hexavlent chromium published on February 28, 2006 in the U.S. Federal Register 71, pages:10099-10385 which established an 8-hour time-weighted average (TWA) exposure limit of 5 micrograms of hexavalent chrome per cubic meter of air (5 µg/m³). This is a considerable reduction from the previous PEL of 1 milligram per 10 cubic meters of air (1 mg/10 m³, or 100 µg/m³) reported as CrO_3, which is equivalent to a limit of 52 µg/m³ as (Cr^{+6}). This rule also contains ancillary provisions for worker protection such as requirements for exposure determination, preferred exposure control methods, including a compliance alternative for a small sector for which the new PEL is infeasible, respiratory protection, protective clothing and equipment, hygiene areas and practices, medical surveillance, recordkeeping, and start-up dates that include four years for the implementation of engineering controls to meet the PEL.

CRYSTALLINE SILICA: The National Toxicology Program indicates there is sufficient evidence for the carcinogenicity or respirable crystalline silica in experimental animals. Increases in incidence of lung cancers have been found in inhalation studies in rats. An IARC working group reported there is limited evidence for the carcinogenicity of crystalline silica in humans.

Sign and symptoms of exposure:

Short term exposure to welding fumes may result in discomfort, dizziness, nausea, or dryness or irritation of the throat.

Medical conditions generally aggravated by exposure:

Individuals with impaired pulmonary functions or illness my have symptoms exacerbated by fume irritants.

Emergency and first aid procedures:

Remove from dust or fume exposure. If breathing has stopped perform artificial respiration. Summon medical aid immediately.

Section VII/VIII - Precautions for Safe Handling and Use

Steps to be taken in case material is released or spilled **N/A**

Waste Disposal Method: Prevent waste from contaminating the surrounding environment. Discard any product, residue, disposable container or liner in an environmentally acceptable manner, in full compliance with federal, state and local regulations

Precautions to be taken in handling and storing: Avoid humidity and temperature shocks.

Other precautions: Electric shock from arc welding equipment can kil. When welding welding arc or torch flame may be a source of ignition of combustible.

Section VIII – Control Measures

special protection information and precautions : Read and understand the manufacturer's instruction and the precautionary label on the product. See American National Standard Z49.1 and OSHA Publication (29 CFR 1910 Hazard Communication Standard for more detail on many of the following.

General protection and hygienic measuers: Wash hands before breaks and at the end of work

Ventilation: Use enough ventilation, local exhaust at the arc, or both, to keep the fumes and gases from the worker's breathing zone and the general area. Train the welder to keep his head out of the fumes. Keep exposures as low as possible

Respiratory Protection: Use respirable fumes respirator or air supplied respirator when welding in confined space or where local exhaust or ventilation does not keep exposure below the recommended exposure limit.

Hand protection: Heat protection gloves(non-combustible).

Material for gloves: Gloves made of leather.

Eye Protection: Wear helmet or use face shield with filter lens. Provide protective screens and flash goggles, if necessary, to shield others. As a rule of thumb, start with a shade that is too dark to see the weld zone. Then go the next lighter shade which gives sufficient view of the weld zone.

Protective Clothing: Wear hand, head, and body protection which help to prevent injury from radiation, sparks, and electrical shock. See ANSI Z49.1. At a minimum this includes welder's gloves and a protective face shield, and may include arm protectors, aprons, hats, shoulder protection, and well as dark substantial clothing. Train the welder not to touch live electrical parts and to insulate himself from work and ground.

REFERENCED STANDARDS

In this publication, reference is made to the standards listed below. Copies are available from the indicated sources.

Official Journals of the European Communities L 314/38, L174/54, referencing Council Regulations 93/112/EC, 91/155/EEC, 88/379/EEC and 67/548/EEC

American Welding Society, Inc.
550 N.W. LeJeune Road
Miami, FL 33126
AWS F1.1-1992 Methods for Sampling Airborne Particulates Generated by Welding and Allied Processes
AWS F1.2-1992 Laboratory Method for Measuring Fume Generation Rates and Total Fume Emission for Welding and Allied Processes

American National Standards Institute
11 West 42nd Street
New York, NY 10036
ANSI Z49.1-1994 Safety in Welding, Cutting and Allied Processes

Superintendent of Documents Administration
U.S. Government Printing Office
Washington, DC 20402
OSHA Standard 29 CFR 1910 Toxic and Hazardous Substances
Subpart Z
1910.1000 Air Contaminants Table Z-2

U.S. Department of Labor
Occupational Safety and Health Administration
200 Constitution Avenue
Room N-3101
Washington, DC 20210
OSHA Standard 29 CFR Material Safety Data Sheet (Non-Mandatory Form) 1910.1200

Environmental Protection Agency
401 M Street, S.W.
Washington, DC 20460
Sections 311, 312, 313 Emergency Planning and Community Right-To-Know Act of 1986 (EPCRA)

American Conferencel of Governmental Industrial Hygienists
Technical Affairs Office
Kemper Woods Center
1330 Kemper Meadow Drive
Cincinnati, OH 45240 Threshold Limit Values (TLVs) for Chemical Substances and Physical Agents and Biological Exposure Indices (BEIs)

The information of this MSDS was obtained from sources we believe are reliable. However, this information is provided without any representation of warranty, expressed or implied, regarding accuracy or correctness.

Böhler Thyssen
WELDING
Member of the BÖHLER-UDDEHOLM Group

MATERIAL SAFETY DATA SHEET

For welding consumables and related products

Conforms to Workplace Hazardous Materials Information System (WHMIS) Rev. Nov. 1988
May be used to comply with Osha's Hazard Communication Standard, 29 CFR 1910.1200. Standard must be consulted for specific requirements.

U.S. Department of Labour
Occupational Safety and Health Administration
(Non-Mandatory Form) Form Approved OMB No. 1218-0072

Maybe used to comply with **Council Directive 2001/58/EG** concerning **Council Directive 91/155/EEG** relating to the classification, packaging and labelling of dangerous substances, referenced in the Official Journal of the European Communities, **European Regulation L 314/38**

Blank spaces are not permitted. If any item is not applicable, or no information is available, the space must be marked to indicate that.

Section I – Identification

Product: **UTP ER308L**
Product Type: Rods and Wires for Gas Shielded Arc Welding

Suppliers name: **BÖHLER THYSSEN SCHWEISSTECHNIK DEUTSCHLAND GMBH**

Address: **UNIONSTRASSE 1, D-59067 HAMM**	Telephone number for information:	**Germany +49-2381-271-771**
Date prepared: 2006-08-08	Signature of preparer: Emergency number: Intoxication information centre	**Dr. H. Heuser** **0049/2381 - 271-02** **0049/30 - 19240**

Section II - Hazardous* Ingredients

Important: This section covers the materials from which this product is manufactured. The fumes and gases produced during normal use when welding with this product are covered by section V. Consult local authorities for acceptance exposure limits.
The term „Hazardous" in „Hazardous Ingredients" should be interpreted as a term required and defined in the OSHA Hazard Communication Standard (29 CFR Part 1910.1200) and does not necessarily imply the existence of any hazard, the same applies correspondingly to the elements provided with hazardous signs.

Ingredient	CAS#	OSHA PEL mg/m³	ACGIH TLV mg/m³	other limits recommended	approx. wt.-% (optional)
Wire or rod					
Aluminium (Al)	7429-90-5	TWA 5.0 respirable fraction TWA 15.0 total dust	TWA 10.0		**< 0.1**
Carbon (C)	7440-44-0	TWA 5.0 respirable fraction TWA 15.0 total dust	TWA 10.0 inhalable fraction TWA 3.0 respirable fraction	inert	**< 0.1**
Chromium (Cr)	7440-47-3	TWA 1.0	TWA 0.5		**19 – 21**
Cobalt (Co)	7440-48-4	TWA 0.1	TWA 0.02 (BEI, as fume)		**< 0.2**
Copper (Cu)	7440-50-8	TWA 1.0	TWA 1.0 dusts & mists TWA 0.2 fume		**< 0.2**
Iron (Fe)	7439-89-6	TWA 10.0	TWA 5.0		**balance**
Manganese (Mn)	7439-96-5	TWA 5.0 ceiling	TWA 0.2		**1 – 2.5**
Molybdenum (Mo)	7439-98-7	TWA 5.0 soluble compounds	A3		**< 0.3**

		TWA 15.0 total dust			
Nickel (Ni)	7440-02-0	TWA 1.0	TWA 1.5		**9 – 11**
Silicon (Si)	7440-21-3	TWA 5.0 respirable fraction TWA 15.0 total dust	TWA 10.0		**< 1**

* The term „Hazardous" in „Hazardous Ingredients" should be interpreted as a term required and defined in the OSHA Hazard Communication Standard (29 CFR Part 1910.1200) and does not necessarily imply the existence of any hazard.

A1 Listed by ACGIH as a Human Carcinogen
A2 Listed by ACGIH as a Suspected Human Carcinogen
A3 Listed by ACGIH as an Animal Carcinogen
C Listed by OSHA as a Human Carcinogen
N/R Not reported or listed
mppcf Million Particles per Cubic Foot
BEI Listed by ACGIH as a substance for which there are biological exposure indices

WARNING: This product contains or produces a chemical known to the state of California to cause cancer.
WARNING: This product contains or produces a chemical known to the state of California to cause birth defects or other reproductive harm.
IMPORTANT: This section covers the material from which this product is manufactured. The fumes and gases produced during welding with this product are covered by SECTION VI.

Section III - Physical and Chemical Characteristics

Boiling Point	**N/A**	Specific Gravity (H_20 = 1)	**N/A**
Vapour Pressure (mm Hg.)	**N/A**	Melting Point	**N/A**
Vapour Density (air = 1)	**N/A**	Evaporation Rate (Butyl Acetate = 1)	**N/A**
Solubility in Water	**insoluble**		
Appearance and Odour	**Solid wire, no specific odour**		

Section IV - Fire and Explosion Hazard Data

Flash Point (Method used)	Flammable Limits	LEL	UEL
non-flammable	**N/A**	**N/A**	**N/A**

Extinguishing Media **N/A**

Special fire fighting procedures: **N/A**
IMPORTANT! Product is non flammable! Welding arc and spark can ignite combustibles and flammables. Refer to ANSI/ASC Z 49.1-1983 Section 6 for fire prevention during the use of welding and allied products.

Unusual fire and explosion hazards:
N/A

Section V – Reactivity Data

Stability			Conditions to avoid	**N/A**
	Unstable	-		
	Stable	X		

Incompatibility (Materials to avoid): **N/A**

Hazardous Decomposition or By-products:
Important: Welding fumes and gases cannot be classified simply. The composition and quantity of both are dependent upon the metal being welded, and the process, procedures, and electrodes used. Other conditions which also influence the composition and quantity of the fumes and gases to which workers may be exposed include: coatings on the metal being welded (such as paint, plating, galvanising, or phosphate coatings on steels which would produce phosphine gas), the number of welders and the volume of the work area, the quality and amount of ventilation, the position of the welder's head with respect to the fume plume as well as the presence of contaminants in the atmosphere (such as chlorinated hydrocarbon vapours from cleaning and degreasing activities which may be decomposed by the arc into toxic gases such as phosgene).

When the electrode is consumed, the fume and gas decomposition products generated are different in percent and form from the ingredients listed in SECTION II. Fume and gas decomposition products, and not the ingredients in the electrode are important. The concentration of a given fume or gas component may decrease or increase by many times the original concentration in the electrode. Also, new compounds not in the electrodes may form. Decomposition products of normal operation include those originating from the volatilization, reaction, or oxidation of the materials shown in SECTION II, plus those from the base metal and coating, etc..., as noted above.

Reasonably expected fume constituents of this product would include: Example for Carbon dioxide shielded flux-cored electrode (AWS 5.20 E70-T-1): Reasonably expected fume constituents of this product would include: primarily oxides of Iron; secondarily complex oxides of Manganese, Silicon, Titanium and Sodium. The present ACGIH TLV for Manganese, 0.1 mg/m³ will result in a significant reduction from the 5 mg/m³ general welding fume (NOC) level. Example for Stainless Steel covered electrodes (AWS 5.4): Reasonably expected fume constituents of this product would include: primarily fluorides and complex oxides of Iron and Silicon, secondarily complex oxides of Manganese, Titanium, Chromium, Nickel, Sodium and Potassium. **The present OSHA PEL (Permissible Exposure Limit) – published in the U.S. Federal Register 71, pages:10099-10385 – for hexavalent Chromium (Cr^{+6}) is 0.005 mg/m³ which will result in a significant reduction from the 5 mg/m³ general welding fume (NOC) level.** It applies to soluble chromates of the types found in covered stainless electrode fumes. Reasonably expected gaseous constituents would include Carbon monoxide and Carbon dioxide. Ozone and nitrogen oxides may be formed by the radiation from the arc. One recommended way to determine the composition and quantity of fumes and gases to which workers are exposed is to take an air sample from inside the welder's helmet if worn or in the worker's breathing zone. See ANSI/AWS F1.1 and ANSI/AWS F1.2-1992. **In order to determine and evaluation of the existing problem areas, the standards prEn 15011 – part 1, 4 can also be applied.**

Hazardous/Polymerisation	May occur	-	Conditions to avoid **N/A**
	Will not occur	X	

NFPA Chemical Hazard Label

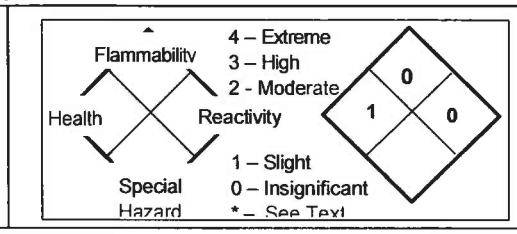

Section VI - Health Hazard Data

Route(s) of entry	Inhalation (**)	Skin (***)	Ingestion **(not likely)**

**** Inhalation of fume.**

***** Rays from welding operations can injure eyes and burn skin.**

Health Hazards (acute and chronic)

Welding electrodes and wires are non-hazardous solids at ambient temperature. Actual exposure should be determined by monitoring the fume in the operator's breathing zone. Compounds of Chromium and Nickel in the fume should be considered possible carcinogens per OSHA29. CFR 1910. 1200. No clear association, however, has been established between Cr and Ni in welding fume and the development of cancer.

Short term overexposure to welding fumes may result in discomfort such as metal fume fever, dizziness, nausea, or dryness or irritation of nose, throat or eyes and may aggravate pre-existing respiratory problems (e.g. asthma, emphysema). See SECTIONS IV and VII. Exposure to extremely high levels of fluorides can cause abdominal pain, diarrhea, muscular weakness, and convulsions. In extreme cases it can cause loss of consciousness and death.to welding fumes may result in discomfort, dizziness, nausea, or dryness or irritation of the throat.

Long term overexposure to welding fumes can lead to siderosis (iron deposits in lung) and may affect pulmonary function. Manganese overexposure can affect the central nervous system, resulting in impaired speech and movement. The primary entry route for welding fumes and gases is by inhalation Bronchitis and some lung fibrosis have been reported. Repeated exposure to fluorides may cause excessive calcification of the bone and calcification of ligaments of the ribs, pelvis and spinal column. May cause skin rash.

Overexposure to hexavalent chromium and nickel present in welding fume can present the risk of lung cancer, asthma and damage to the nose and skin.

Arc Rays can injure eyes and burn skin. Electric Shock can kill. Before use, read and understand the manufacturer's instructions., MSDSs, and your employer's safety practices. Keep your head out of the fumes. Use enough ventilation, exhaust at the arc, or both, to keep fumes and gases from your breathing zone and the general area. Wear correct eye,

ear, and body protection.. Do not touch live electrical parts. See American National Standard Z49.1, and OSHA Safety and Health Standards.

Carcinogenicity

NICKEL: The International Agency for Research on Cancer indicates nickel refining and "certain nickel compounds" were cancer-causing, but could not state with certainty which forms of nickel may be carcinogenic. The National Toxicology Program lists nickel powder, nickel subsulfide, nickel oxide, nickel carbonate, nickel carbonyl and nickelocene as substances "that may reasonably anticipated to be carcinogens." Because of this, the OSHA Hazard Communication Standard requires that everyone who manufactures or imports these substances or mixtures or alloys containing these substances must warn of a cancer hazard on their MSDS's and labels. This warning is mandated by OSHA even though studies have not demonstrated cancer risks associated with the use of nickel. Intramuscular injection and implantation of nickel powder produced localized tumors in rats and mice. Inhalation studies using animals showed no evidence of carcinogenicity.

CHROMIUM: The International Agency for Research on Cancer and The National Toxicology Program indicates there is sufficient evidence for carcinogenicity of chromium compounds both in humans and experimental animals. IARC notes that "the compounds responsible for the carcinogenic effect in humans cannot be specified." Studies with chromium metal and trivalent forms of chromium compounds have shown inadequate evidence for carcinogenicity in both animals and humans.

Threshold Limit Value: The ACGIH recommended general limit for Welding Fume NOC – (Not Otherwise Classified) is 5 mg/m³. The TLV-TWA is the time weighted average concentration for a normal 8-hour workday and a 40 hour workweek, to which nearly all workers may be repeatedly exposed, day after day, without adverse effect. Limit Values are figures published by the American Conference of Government Inpoussièrerial Hygienists.

Workers exposed to hexavalent chrome (Cr^{+6}) are at an increased risk of developing lung cancer. It also possible that occupational exposure to (Cr^{+6}) may result in asthma, and damage to the nasal epithelia and skin. To avoid any risk follow the requirements of the OSHA rule for hexavlent chromium published on February 28, 2006 in the U.S. Federal Register 71, pages:10099-10385 which established an 8-hour time-weighted average (TWA) exposure limit of 5 micrograms of hexavalent chrome per cubic meter of air (5 µg/m³). This is a considerable reduction from the previous PEL of 1 milligram per 10 cubic meters of air (1 mg/10 m³, or 100 µg/m³) reported as CrO_3, which is equivalent to a limit of 52 µg/m³ as (Cr^{+6}). This rule also contains ancillary provisions for worker protection such as requirements for exposure determination, preferred exposure control methods, including a compliance alternative for a small sector for which the new PEL is infeasible, respiratory protection, protective clothing and equipment, hygiene areas and practices, medical surveillance, recordkeeping, and start-up dates that include four years for the implementation of engineering controls to meet the PEL.

CRYSTALLINE SILICA: The National Toxicology Program indicates there is sufficient evidence for the carcinogenicity or respirable crystalline silica in experimental animals. Increases in incidence of lung cancers have been found in inhalation studies in rats. An IARC working group reported there is limited evidence for the carcinogenicity of crystalline silica in humans.

Sign and symptoms of exposure:
Short term exposure to welding fumes may result in discomfort, dizziness, nausea, or dryness or irritation of the throat.

Medical conditions generally aggravated by exposure:
Individuals with impaired pulmonary functions or illness my have symptoms exacerbated by fume irritants.

Emergency and first aid procedures:
Remove from dust or fume exposure. If breathing has stopped perform artificial respiration. Summon medical aid immediately.

Section VII/VIII - Precautions for Safe Handling and Use

Steps to be taken in case material is released or spilled **N/A**

Waste Disposal Method: Prevent waste from contaminating the surrounding environment. Discard any product, residue, disposable container or liner in an environmentally acceptable manner, in full compliance with federal, state and local regulations

Precautions to be taken in handling and storing: Avoid humidity and temperature shocks.

Other precautions: Electric shock from arc welding equipment can kill. When welding welding arc or torch flame may be a source of ignition of combustible.

Section VIII – Control Measures

special protection information and precautions : Read and understand the manufacturer's instruction and the precautionary label on the product. See American National Standard Z49.1 and OSHA Publication (29 CFR 1910 Hazard Communication Standard for more detail on many of the following.

General protection and hygienic measuers: Wash hands before breaks and at the end of work

Ventilation: Use enough ventilation, local exhaust at the arc, or both, to keep the fumes and gases from the worker's breathing zone and the general area. Train the welder to keep his head out of the fumes. Keep exposures as low as possible

Respiratory Protection: Use respirable fumes respirator or air supplied respirator when welding in confined space or where local exhaust or ventilation does not keep exposure below the recommended exposure limit.

Hand protection: Heat protection gloves(non-combustible).

Material for gloves: Gloves made of leather.

Eye Protection: Wear helmet or use face shield with filter lens. Provide protective screens and flash goggles, if necessary, to shield others. As a rule of thumb, start with a shade that is too dark to see the weld zone. Then go the next lighter shade which gives sufficient view of the weld zone.

Protective Clothing: Wear hand, head, and body protection which help to prevent injury from radiation, sparks, and electrical shock. See ANSI Z49.1. At a minimum this includes welder's gloves and a protective face shield, and may include arm protectors, aprons, hats, shoulder protection, and well as dark substantial clothing. Train the welder not to touch live electrical parts and to insulate himself from work and ground.

REFERENCED STANDARDS

In this publication, reference is made to the standards listed below. Copies are available from the indicated sources.

Official Journals of the European Communities L 314/38, L174/54, referencing Council Regulations 93/112/EC, 91/155/EEC, 88/379/EEC and 67/548/EEC

American Welding Society, Inc.
550 N.W. LeJeune Road
Miami, FL 33126
AWS F1.1-1992 Methods for Sampling Airborne Particulates Generated by Welding and Allied Processes
AWS F1.2-1992 Laboratory Method for Measuring Fume Generation Rates and Total Fume Emission for Welding and Allied Processes

American National Standards Institute
11 West 42nd Street
New York, NY 10036
ANSI Z49.1-1994 Safety in Welding, Cutting and Allied Processes

Superintendent of Documents Administration
U.S. Government Printing Office
Washington, DC 20402
OSHA Standard 29 CFR 1910 Toxic and Hazardous Substances
Subpart Z
1910.1000 Air Contaminants Table Z-2

U.S. Department of Labor
Occupational Safety and Health Administration
200 Constitution Avenue
Room N-3101
Washington, DC 20210
OSHA Standard 29 CFR Material Safety Data Sheet (Non-Mandatory Form) 1910.1200

Environmental Protection Agency
401 M Street, S.W.
Washington, DC 20460
Sections 311, 312, 313 Emergency Planning and Community Right-To-Know Act of 1986 (EPCRA)

American Conferencel of Governmental Industrial Hygienists
Technical Affairs Office
Kemper Woods Center
1330 Kemper Meadow Drive
Cincinnati, OH 45240 Threshold Limit Values (TLVs) for Chemical Substances and Physical Agents and Biological Exposure Indices (BEIs)

The information of this MSDS was obtained from sources we believe are reliable. However, this information is provided without any representation of warranty, expressed or implied, regarding accuracy or correctness.

APPENDIX F: PAINT AND SOLVENT MSDS

carboline

Material Safety Data Sheet

CHEMTREC Transportation Emergency Phone: 800-424-9300

Pittsburgh Poison Control Center
Health Emergency No.: 412-681-6669

•NOTE: The CHEMTREC Transportation Emergency Phone is to be used only in the event of chemical emergencies involving a spill, leak, fire, exposure or accident involving chemicals

Section 1 - Chemical Product / Company Information

Product Name: PHENOLINE 309 PART A

Identification Number: PLMSDS S309A1NL

Product Use/Class: Polyamine Epoxy - FOR INDUSTRIAL USE ONLY

Revision Date: 04/27/2011

Supercedes : 03/12/2008

Preparer: Regulatory, Department

Manufacturer:
Carboline Company
2150 Schuetz Road
St. Louis, MO 63146
(800) 848-4645

Section 2 - Composition / Information On Ingredients

Chemical Name	CAS Number	Weight % Less Than	ACGIH TLV-TWA	ACGIH TLV-STEL	OSHA PEL-TWA	OSHA-CEIL
EPOXY RESIN	25068-38-6	65.0	NE	NE	NE	NE
MICA	12001-26-2	20.0	3 MGM3	N/E	3 MGM3	N/E
ALKYL GLYCIDYL ETHER	68609-97-2	15.0	NE	NE	NE	NE
TITANIUM DIOXIDE	13463-67-7	5.0	10 MGM3	N/E	10 MGM3	N/E
SILICA, CRYSTALLINE FREE	112945-52-5	5.0	10 MG/M3, inhalable particles	N/E	5 MG/M3 respirable fraction	N/E
CARBON BLACK	1333-86-4	1.0	3.5 MG/M3	N/E	3.5 MG/M3	N/E
MICROCRYSTALLINE SILICA	14808-60-7	0.2	0.025 MG/M3 (respirable)	N/E	0.1 MG/M3 (respirable)	N/E

Section 3 - Hazards Identification

Emergency Overview: Warning! May cause allergic skin reactions. May cause irritation. Contains SILICA which can cause cancer. Risk of Cancer depends on duration and level of exposure.

Effects Of Overexposure - Eye Contact: May cause eye irritation.

Effects Of Overexposure - Skin Contact: May cause skin sensitization. May cause allergic skin reaction. May cause skin irritation.

Effects Of Overexposure - Inhalation: May cause nose and throat irritation.

Effects Of Overexposure - Ingestion: May be harmful if swallowed.

Effects Of Overexposure - Chronic Hazards: Crystalline silica is known to cause silicosis. Crystalline silica

(Quartz) is classified as a known human carcinogen (Group 1) by IARC. Exposure is by route of inhalation. If material is in a liquid matrix it is unlikely to be inhaled. However, when sanding or grinding the finished product, there may be potential for crystalline silica to become airborne.

Primary Route(s) Of Entry: Skin Contact, Skin Absorption, Inhalation, Ingestion, Eye Contact

Medical Conditions Prone to Aggravation by Exposure: If sensitized to amines, epoxies, or other chemicals do not use. See a physician if a medical condition exists.

Section 4 - First Aid Measures

First Aid - Eye Contact: If material gets into eyes, flush with water immediately for 15 minutes. Consult a physician.

First Aid - Skin Contact: In case of contact, wash skin immediately with soap and water.

First Aid - Inhalation: If inhaled, remove to fresh air. Administer oxygen if necessary. Consult a physician if symptoms persist or exposure was severe.

First Aid - Ingestion: If swallowed do not induce vomiting. Seek immediate medical attention.

Section 5 - Fire Fighting Measures

Flash Point, F: 310 F (154C) (Setaflash)

Lower Explosive Limit, %: 3.8
Upper Explosive Limit, %: 21.0

Extinguishing Media: Carbon Dioxide, Dry Chemical, Foam, Water Fog

Unusual Fire And Explosion Hazards: This product contains less than 1% volatile components. The amount of vapors that could accumulate are minimal. However, vapors are heavier than air and could travel long distances, ignite, and flashback. Eliminate all ignition sources. Keep away from sparks, open flames, and heat sources. All electrical equipment and installations should be made and grounded in accordance with the National Electrical Code. In areas where explosion hazards exist, workers should be required to use nonferrous tools and to wear conductive and non-sparking shoes.

Special Firefighting Procedures: Evacuate hazard area of unprotected personnel. Use a NIOSH approved self-contained breathing unit and complete body protection. Cool surrounding containers with water in case of fire exposure.

Section 6 - Accidental Release Measures

Steps To Be Taken If Material Is Released Or Spilled: Eliminate all ignition sources. Handling equipment must be grounded to prevent sparking. Evacuate the area of unprotected personnel. Wear appropriate personal protection clothing and equipment. Follow exposure controls/personal protection guidelines in Section 8. Contain and soak up residual with an aborbent (clay or sand). Take up absorbant material and seal tightly for proper disposal. Dispose of in accordance with local, state and federal regulations. Refer to Section 15 for SARA Title III and CERCLA information.

Section 7 - Handling And Storage

Handling: Do not get in eyes, on skin, or on clothing. Keep container tightly closed when not in use. Wear personal protection equipment. Do not breathe vapors. Wash thoroughly after handling. If pouring or

transferring materials, ground all containers and tools. Do not weld, heat, cut or drill on full or empty containers. Use only in accordance with Carboline application instructions, container label and Product Data Sheet. Avoid breathing vapors or spray mist.

Storage: Keep away from heat, sparks, open flames and oxidizing agents. Keep containers closed. Store in a cool, dry place with adequate ventilation.

Section 8 - Exposure Controls / Personal Protection

Engineering Controls: Use explosion-proof ventilation when required to keep below health exposure guidelines and Lower Explosion Limit (LEL).

Respiratory Protection: Use only with ventilation to keep levels below exposure guidelines listed in Section 2. User should test and monitor exposure levels to ensure all personnel are below guidelines. If not sure, or not able to monitor, use MSHA/NIOSH approved supplied air respirator. Follow all current OSHA requirements for respirator use. For silica containing coatings in a liquid state, and/or if no exposure limits are established in Section 2 above, supplied air respirators are generally not required.

Skin Protection: Recommend impervious gloves and clothing to avoid skin contact. If material penetrates to skin, change gloves and clothing. The use of protective creams may be beneficial to certain individuals. Protective creams should be applied before exposure.

Eye Protection: Recommend safety glasses with side shields or chemical goggles to avoid eye contact.

Other protective equipment: Eye wash and safety showers should be readily available.

Hygienic Practices: Wash with soap and water before eating, drinking, smoking, applying cosmetics, or using toilet facilities. Use of a hand cleaner is recommended. Launder contaminated clothing before reuse. Leather shoes can absorb and allow hazardous materials to pass through. Check shoes carefully after soaking before reuse.

Section 9 - Physical And Chemical Properties

Boiling Range:	N/A - .	**Vapor Density:**	Heavier than Air
Odor:	Epoxy	**Odor Threshold:**	N/D
Appearance:	Viscous Liquid, Various Colors	**Evaporation Rate:**	Slower Than Ether
Solubility in H2O:	N/D		
Freeze Point:	N/D	**Specific Gravity:**	app 1.29
Vapor Pressure:	N/D	**PH:**	N/D
Physical State:	Liquid		

(See section 16 for abbreviation legend)

Section 10 - Stability And Reactivity

Conditions To Avoid: Heat, sparks and open flames.

Incompatibility: Avoid contact with strong oxidizing agents.

Hazardous Decomposition Products: Carbon monoxide, nitrogen oxides, and unidentified organic compounds. Consider all smoke and fumes from burning material as very hazardous. Welding, cutting or abrasive grinding can create smoke and fumes. Do not breathe any fumes or smoke from these operations.

Hazardous Polymerization: Will not occur under normal conditions.

Stability: This product is stable under normal storage conditions.

Section 11 - Toxicological Information

Product LD50: N/D

Product LC50: N/D

Chemical Name	CAS Number	LD50	LC50
EPOXY RESIN	25068-38-6	11.4G/KG RAT,ORAL	>20ML/KG SKIN,SENSITIZER
MICA	12001-26-2	NOT AVAILABLE	NOT AVAILABLE
ALKYL GLYCIDYL ETHER	68609-97-2	> 2000 MG/KG, ORAL, RAT	> 5 MG/L
TITANIUM DIOXIDE	13463-67-7	>25 G/KG, ORAL, RAT	>6.82 MG/L 4 HR, RAT
SILICA, CRYSTALLINE FREE	112945-52-5	>10000 MG/KG, ORAL, RAT	0.139 MG/L / 4 HRS RAT, INH
CARBON BLACK	1333-86-4	NOT AVAILABLE	>8000 MG/KG, ORAL, RAT
MICROCRYSTALLINE SILICA	14808-60-7	NOT AVAILABLE	NOT AVAILABLE

Section 12 - Ecological Information

Ecological Information: No data

Section 13 - Disposal Information

Disposal Information: Dispose of in accordance with State, Local, and Federal Environmental regulations. Responsibility for proper waste disposal is with the owner of the waste.

Section 14 - Transportation Information

DOT Proper Shipping Name: Not Regulated

Packing Group: N/A

DOT Technical Name: N/A

Hazard Subclass: N/A

DOT Hazard Class: None

Resp. Guide Page: N/A

DOT UN/NA Number: None

Additional Notes: None.

Section 15 - Regulatory Information

CERCLA - SARA HAZARD CATEGORY

This product has been reviewed according to the EPA Hazard Categories promulgated under Sections 311and 312 of the Superfund Amendment and Reauthorization Act of 1986 (SARA Title III) and is considered, under applicable definitions, to meet the following categories:

IMMEDIATE HEALTH HAZARD, CHRONIC HEALTH HAZARD

SARA SECTION 313

This product contains the following substances subject to the reporting requirements of Section 313 of Title III of the Superfund Amendment and Reauthorization Act of 1986 and 40 CFR part 372:

No Section 313 Substances exist in this product

TOXIC SUBSTANCES CONTROL ACT

All components of this product are listed on the TSCA inventory.

This product contains the following chemical substances subject to the reporting requirements of TSCA 12(B) if exported from the United States:

No TSCA 12(B) Substances exist in this product

U.S. STATE REGULATIONS AS FOLLOWS:

NEW JERSEY RIGHT-TO-KNOW

The following materials are non-hazardous, but are among the top five components in this product.

PENNSYLVANIA RIGHT-TO-KNOW

The following non-hazardous ingredients are present in the product at greater than 3%.

CALIFORNIA PROPOSITION 65

Warning: The following ingredients present in the product are known to the state of California to cause Cancer:

Chemical Name	CAS Number
CARBON BLACK	1333-86-4
MICROCRYSTALLINE SILICA	14808-60-7
EPICHLOROHYDRIN	106-89-8

Warning: The following ingredients present in the product are known to the state of California to cause birth defects, or other reproductive hazards:

Chemical Name	CAS Number
EPICHLOROHYDRIN	106-89-8

INTERNATIONAL REGULATIONS AS FOLLOWS:

CANADIAN WHMIS

This MSDS has been prepared in compliance with Controlled Product Regulations except for the use of the 16 headings.

CANADIAN WHMIS CLASS: D2A D2B

Section 16 - Other Information

HMIS Ratings
Health: 2 **Flammability:** 1 **Reactivity:** 0 **Personal Protection:** X

VOLATILE ORGANIC COMPOUNDS, GR/LTR MIXED (UNTHINNED): 0

REASON FOR REVISION: Changes made in Section(s) 1, 2, 3, 11, and 15.

Legend: N.A. - Not Applicable, N.E. - Not Established, N.D. - Not Determined

The information contained herein is, to the best of our knowledge and belief accurate. However, since the conditions of handling and use are beyond our control, we make no guarantee of results, and assume no liability for damages incurred by use of this material. It is the responsibility of the user to comply with all applicable federal, state, and local laws and regulations

carboline

Material Safety Data Sheet

CHEMTREC Transportation Emergency Phone: 800-424-9300

Pittsburgh Poison Control Center Health Emergency No.: 412-681-6669

•NOTE: The CHEMTREC Transportation Emergency Phone is to be used only in the event of chemical emergencies involving a spill, leak, fire, exposure or accident involving chemicals

Section 1 - Chemical Product / Company Information

Product Name: PHENOLINE 309/379 PART B

Identification Number: PLMSDS S309B1NL

Product Use/Class: Polyamine Epoxy - FOR INDUSTRIAL USE ONLY

Revision Date: 05/03/2011

Supercedes : 03/12/2008

Preparer: Regulatory, Department

Manufacturer:
Carboline Company
2150 Schuetz Road
St. Louis, MO 63146
(800) 848-4645

Section 2 - Composition / Information On Ingredients

Chemical Name	CAS Number	Weight % Less Than	ACGIH TLV-TWA	ACGIH TLV-STEL	OSHA PEL-TWA	OSHA-CEIL
POLYMER of C-18 UNSAT'D FATTY	68082-29-1	70.0	N/E	N/E	N/E	N/E
TRIETHYLENETETRAMINE	112-24-3	35.0	NE	N/E	NE	NE

Section 3 - Hazards Identification

Emergency Overview: Corrosive Material. Harmful if swallowed. Can cause eye and skin burns. May cause skin sensitization.

Effects Of Overexposure - Eye Contact: May cause eye burns.

Effects Of Overexposure - Skin Contact: May cause skin burns. May cause allergic skin reaction. May be harmful if absorbed through the skin.

Effects Of Overexposure - Inhalation: May cause nose and throat irritation. May cause lung irritation. May cause allergic respiratory reaction, effects may be permanent.

Effects Of Overexposure - Ingestion: Harmful if swallowed.

Effects Of Overexposure - Chronic Hazards: No Information.

Primary Route(s) Of Entry: Skin Contact, Skin Absorption, Inhalation, Ingestion, Eye Contact

Medical Conditions Prone to Aggravation by Exposure: If sensitized to amines, epoxies, or other

chemicals do not use. See a physician if a medical condition exists.

Section 4 - First Aid Measures

First Aid - Eye Contact: If material gets into eyes, flush with water immediately for 15 minutes. Consult a physician.

First Aid - Skin Contact: In case of contact, immediately wash with plenty of soap and water for at least 15 minutes. Seek medical attention. Remove contaminated clothing and shoes. Clean contaminated clothing and shoes before re-use.

First Aid - Inhalation: If inhaled, remove to fresh air. Administer oxygen if necessary. Consult a physician if symptoms persist or exposure was severe.

First Aid - Ingestion: If swallowed do not induce vomiting. Seek immediate medical attention.

Section 5 - Fire Fighting Measures

Flash Point, F: 485F (251C) (Setaflash)

Lower Explosive Limit, %: N/A
Upper Explosive Limit, %: N/A

Extinguishing Media: Carbon Dioxide, Dry Chemical, Foam, Water Fog

Unusual Fire And Explosion Hazards: This product contains less than 1% volatile components. The amount of vapors that could accumulate are minimal. However, vapors are heavier than air and could travel long distances, ignite, and flashback. Eliminate all ignition sources. Keep away from sparks, open flames, and heat sources. All electrical equipment and installations should be made and grounded in accordance with the National Electrical Code. In areas where explosion hazards exist, workers should be required to use nonferrous tools and to wear conductive and non-sparking shoes.

Special Firefighting Procedures: Evacuate hazard area of unprotected personnel. Use a NIOSH approved self-contained breathing unit and complete body protection. Cool surrounding containers with water in case of fire exposure.

Section 6 - Accidental Release Measures

Steps To Be Taken If Material Is Released Or Spilled: Eliminate all ignition sources. Handling equipment must be grounded to prevent sparking. Evacuate the area of unprotected personnel. Wear appropriate personal protection clothing and equipment. Follow exposure controls/personal protection guidelines in Section 8. Contain and soak up residual with an aborbent (clay or sand). Take up absorbant material and seal tightly for proper disposal. Dispose of in accordance with local, state and federal regulations. Refer to Section 15 for SARA Title III and CERCLA information.

Section 7 - Handling And Storage

Handling: Do not get in eyes, on skin, or on clothing. Keep container tightly closed when not in use. Wear personal protection equipment. Do not breathe vapors. Wash thoroughly after handling. If pouring or transferring materials, ground all containers and tools. Do not weld, heat, cut or drill on full or empty containers. Use only in accordance with Carboline application instructions, container label and Product Data Sheet.

Storage: Keep away from heat, sparks, open flames and oxidizing agents. Keep containers closed. Store in a cool, dry place with adequate ventilation.

Section 8 - Exposure Controls / Personal Protection

Engineering Controls: Use explosion-proof ventilation when required to keep below health exposure guidelines and Lower Explosion Limit (LEL).

Respiratory Protection: Use only with ventilation to keep levels below exposure guidelines listed in Section 2. User should test and monitor exposure levels to ensure all personnel are below guidelines. If not sure, or not able to monitor, use MSHA/NIOSH approved supplied air respirator. Follow all current OSHA requirements for respirator use. For silica containing coatings in a liquid state, and/or if no exposure limits are established in Section 2 above, supplied air respirators are generally not required.

Skin Protection: Recommend impervious gloves and clothing to avoid skin contact. If material penetrates to skin, change gloves and clothing. The use of protective creams may be beneficial to certain individuals. Protective creams should be applied before exposure.

Eye Protection: Recommend safety glasses with side shields or chemical goggles to avoid eye contact.

Other protective equipment: Eye wash and safety showers should be readily available.

Hygienic Practices: Wash with soap and water before eating, drinking, smoking, applying cosmetics, or using toilet facilities. Use of a hand cleaner is recommended. Launder contaminated clothing before reuse. Leather shoes can absorb and allow hazardous materials to pass through. Check shoes carefully after soaking before reuse.

Section 9 - Physical And Chemical Properties

Boiling Range:	N/A -	**Vapor Density:**	Heavier than Air
Odor:	Amine	**Odor Threshold:**	N/D
Appearance:	Viscous Brown Liquid	**Evaporation Rate:**	Slower Than Ether
Solubility In H2O:	N/D		
Freeze Point:	N/D	**Specific Gravity:**	0.97
Vapor Pressure:	N/D	**PH:**	N/D
Physical State:	Liquid		

(See section 16 for abbreviation legend)

Section 10 - Stability And Reactivity

Conditions To Avoid: Heat, sparks and open flames.

Incompatibility: Avoid contact with strong oxidizing agents.

Hazardous Decomposition Products: Carbon monoxide, nitrogen oxides, and unidentified organic compounds. Consider all smoke and fumes from burning material as very hazardous. Welding, cutting or abrasive grinding can create smoke and fumes. Do not breathe any fumes or smoke from these operations.

Hazardous Polymerization: Will not occur under normal conditions.

Stability: This product is stable under normal storage conditions.

Section 11 - Toxicological Information

Product LD50: N/D

Product LC50: N/D

Chemical Name	CAS Number	LD50	LC50
POLYMER of C-18 UNSAT'D FATTY	68082-29-1	>2000 MG/KG ORAL,RAT	NOT AVAILABLE
TRIETHYLENETETRAMINE	112-24-3	2500MG/KG RAT,ORAL,805 MG/KG DERMAL	NOT AVAILABLE

Section 12 - Ecological Information

Ecological Information: No data

Section 13 - Disposal Information

Disposal Information: Dispose of in accordance with State, Local, and Federal Environmental regulations. Responsibility for proper waste disposal is with the owner of the waste.

Section 14 - Transportation Information

DOT Proper Shipping Name: Paint

DOT Technical Name: N/A

DOT Hazard Class: 8

DOT UN/NA Number: UN 3066

Packing Group: III

Hazard Subclass: N/A

Resp. Guide Page: 153

Additional Notes: None.

Section 15 - Regulatory Information

CERCLA - SARA HAZARD CATEGORY

This product has been reviewed according to the EPA Hazard Categories promulgated under Sections 311and 312 of the Superfund Amendment and Reauthorization Act of 1986 (SARA Title III) and is considered, under applicable definitions, to meet the following categories:

IMMEDIATE HEALTH HAZARD, CHRONIC HEALTH HAZARD

SARA SECTION 313

This product contains the following substances subject to the reporting requirements of Section 313 of Title III of the Superfund Amendment and Reauthorization Act of 1986 and 40 CFR part 372:

No Section 313 Substances exist in this product

TOXIC SUBSTANCES CONTROL ACT

All components of this product are listed on the TSCA inventory.

This product contains the following chemical substances subject to the reporting requirements of TSCA 12(B) if exported from the United States:

No TSCA 12(B) Substances exist in this product

U.S. STATE REGULATIONS AS FOLLOWS:

NEW JERSEY RIGHT-TO-KNOW

The following materials are non-hazardous, but are among the top five components in this product.

Chemical Name	CAS Number
POLYDIMETHYL SILOXANE	63148-62-9

PENNSYLVANIA RIGHT-TO-KNOW

The following non-hazardous ingredients are present in the product at greater than 3%.

CALIFORNIA PROPOSITION 65

Warning: The following ingredients present in the product are known to the state of California to cause Cancer:

No California Proposition 65 Carcinogens exist

Warning: The following ingredients present in the product are known to the state of California to cause birth defects, or other reproductive hazards:

No California Proposition 65 Reproductive Toxins exist

INTERNATIONAL REGULATIONS AS FOLLOWS:

CANADIAN WHMIS

This MSDS has been prepared in compliance with Controlled Product Regulations except for the use of the 16 headings.

CANADIAN WHMIS CLASS: D2B E

Section 16 - Other Information

HMIS Ratings
Health: 3 **Flammability:** 1 **Reactivity:** 1 **Personal Protection:** X

VOLATILE ORGANIC COMPOUNDS, GR/LTR MIXED (UNTHINNED): 0

REASON FOR REVISION: Changes made in Section(s) 1, 3, 11, and 15.

Legend: N.A. - Not Applicable, N.E. - Not Established, N.D. - Not Determined

The information contained herein is, to the best of our knowledge and belief accurate. However, since the conditions of handling and use are beyond our control, we make no guarantee of results, and assume no liability for damages incurred by use of this material. It is the responsibility of the user to comply with all applicable federal, state, and local laws and regulations

product data

carboline®

Phenoline® 309

Selection & Specification Data

Generic Type	Polyamine Epoxy
Description	Single-coat, airless-applied, ultra-high build coating for use on steel and concrete substrates subject to aggressive chemical fume and spill exposure. Phenoline 309 provides exceptional resistance to thermal shock and abrasion, and has found wide acceptance in a broad variety of heavy industrial applications.
Features	▪ Single coat application reduces labor costs ▪ Ultra-high build capabilities provides a void-free film and excellent edge protection ▪ Wide chemical resistance to acids, caustics and aliphatic solvents ▪ Can be mat reinforced where exposure conditions dictate ▪ Application by airless spray equipment (plural component acceptable but not required) ▪ VOC compliant to current AIM regulations
Color	White (0800), Gray (F744)
Finish	Eggshell
Primers	Self-priming
Dry Film Thickness	1 coat system: 20-30 mils (500-750 microns) 2 coat system: 20-25 mils (500-625 microns) per coat. Milleges of up to 50 mils (1250 microns) in a single coat can be achieved if fresh material is used.
Solids Content	By Volume: 100%
Theoretical Coverage Rate	1604 mil ft^2 (39.0 m^2/l at 25 microns) Allow for loss in mixing and application
VOC Values	As supplied: 0.0 lbs/gal (0 g/l) These are nominal values and may vary slightly with color.
Dry Temp. Resistance	Continuous: 140°F (60°C) Non-Continuous: 180°F (82°C) Discoloration and loss of gloss is observed above 140°F (60°C).
Limitations	Epoxies lose gloss, discolor and eventually chalk in sunlight exposure. This coating commonly develops an *amine-blush* during cure. While this condition will not adversely affect performance of the coating, this blush must be removed before applying additional coats and may require removal before placing into service.

Substrates & Surface Preparation

General	Surfaces must be clean and dry. Employ adequate methods to remove dirt, dust, oil and all other contaminants that could interfere with adhesion of the coating.
Steel	SSPC-SP10 2-4 mils (50-100 microns)
Concrete	Concrete must be cured 28 days at 75°F (24°C) and 50% relative humidity or equivalent. Prepare surfaces in accordance with ASTM D4258 Surface Cleaning of Concrete and ASTM D4259 Abrading Concrete. Voids in concrete may require surfacing.

September 2010 replaces April 2008

To the best of our knowledge the technical data contained herein is true and accurate on the date of publication and is subject to change without prior notice. User must contact Carboline Company to verify correctness before specifying or ordering. No guarantee of accuracy is given or implied. We guarantee our products to conform to Carboline quality control. We assume no responsibility for coverage, performance or injuries resulting from use. Liability, if any, is limited to replacement of products. NO OTHER WARRANTY OR GUARANTEE OF ANY KIND IS MADE BY CARBOLINE, EXPRESS OR IMPLIED, STATUTORY, BY OPERATION OF LAW, OR OTHERWISE, INCLUDING MERCHANTABILITY AND FITNESS FOR A PARTICULAR PURPOSE. Carboline® and Phenoline® are registered trademarks of Carboline Company.

Phenoline® 309

Application Equipment

Listed below are general equipment guidelines for the application of this product. Job site conditions may require modifications to these guidelines to achieve the desired results.
General Guidelines:

Spray Application (General)
Recommended for application by single or plural component airless spray. This is a high solids coating and may require adjustments in spray techniques. Wet film thickness is easily and quickly achieved. The following spray equipment has been found suitable and is available from manufacturers such as Binks, DeVilbiss and Graco.

Conventional Spray
Not recommended

Airless Spray

Pump Ratio:	45:1 (min.)*
GPM Output:	3.0 (min.)
Material Hose:	½" I.D. (min.)
Tip Size:	.035"-.042"
Output PSI:	2700-3000
Filter Size:	60 mesh

*Teflon packings are recommended and available from the pump manufacturer.
Contact Carboline Technical Service for plural component equipment recommendations.

Brush & Roller (General)
Not recommended for tank lining applications except when striping welds.

Brush
For touch up and limited areas only.

Roller
For touch up and limited areas only.

Mixing & Thinning

Mixing
Power mix separately, then combine and power mix. DO NOT MIX PARTIAL KITS.

Ratio
4:1 Ratio (A to B)

Thinning
Not recommended. Use of thinners other than those supplied or recommended by Carboline may adversely affect product performance and void product warranty, whether expressed or implied.

Pot Life
45 minutes at 75°F (24°C). Pot life ends when material begins to thicken and starts to heat up. Pot life times will be less at higher temperatures.

Cleanup & Safety

Cleanup
Use Thinner #2 or Acetone. In case of spillage, absorb and dispose of in accordance with local applicable regulations.

Safety
Read and follow all caution statements on this product data sheet and on the MSDS for this product. Employ normal workmanlike safety precautions. Hypersensitive persons should wear protective clothing, gloves and use protective cream on face, hands and all exposed areas.

Ventilation
Vapors and/or spray mist may cause explosion. When used as a tank lining or in enclosed areas, thorough air circulation must be used during and after application until the coating is cured. The ventilation system should be capable of preventing the solvent vapor concentration from reaching the lower explosion limit for the solvents used. In addition to ensuring proper ventilation, appropriate respirators must be used by all application personnel.

Caution
This product contains flammable solvents. Keep away from sparks and open flames. All electrical equipment and installations should be made and grounded in accordance with the National Electric Code. In areas where explosion hazards exist, workmen should be required to use non-ferrous tools and wear conductive and non-sparking shoes.

Application Conditions

Condition	Material	Surface	Ambient	Humidity
Normal	75°-85°F (24°-29°C)	60°-85°F (16°-29°C)	60°-90°F (16°-32°C)	0-80%
Minimum	75°F (24°C)	50°F (10°C)	50°F (10°C)	0%
Maximum	90°F (32°C)	125°F (52°C)	110°F (43°C)	90%

This product simply requires the substrate temperature to be above the dew point. Condensation due to substrate temperatures below the dew point can cause flash rusting on prepared steel and interfere with proper adhesion to the substrate. Special application techniques may be required above or below normal application conditions. To reduce outgassing when applying to concrete substrates, do not apply in direct sunlight or when surface temperatures are increasing. Best results are obtained when ambient and surface temperatures are decreasing or constant.

Curing Schedule

Surface Temp. & 50% Relative Humidity	Minimum Recoat Time	Maximum Recoat Time	Final Cure
50°F (10°C)	NR*	NR*	NR*
60°F (16°C)	24 Hours	4 Days	96 Hours
75°F (24°C)	12 Hours	2 Days	36 Hours
90°F (32°C)	4 Hours	1 Day	24 Hours

These times are based on a 20.0 mil (500 micron) dry film thickness. Higher film thicknesses, insufficient ventilation or cooler temperatures will require longer cure times and could result in solvent entrapment and premature failure. Condensation on the surface or humidity above 25% during application and curing will result in a surface haze or blush. Any haze or blush must be removed by water washing before recoating. During high humidity conditions, it is recommended that the application be done while temperatures are increasing. If the maximum recoat time is exceeded, the surface must be washed with detergent and water, then abraded by sweep blasting prior to the application of additional coats. For force curing, contact Carboline Technical Service for specific requirements.

Packaging, Handling & Storage

Shipping Weight (Approximate)
1 Gallon Kit: 12 lbs (5 kg)
5 Gallon Kit: 53 lbs (24 kg)

Flash Point (Setaflash)
Part A: >205°F (96°C)
Part B: >205°F (96°C)

Storage (General)
Store indoors.

Storage Temperature & Humidity
50°- 85°F (11°-30°C)
0-100% Relative Humidity

Shelf Life
The cure mechanism of this product is not affected for a minimum of 24 months. Film build (per coat) decreases with age. *Fresh*: Over 60 mils; *3-6 months*: 40-50 mils; *After 6 months*: less than 30 mils. Follow intercoat preparation requirements.

***Shelf Life: (actual stated shelf life) when kept at recommended storage conditions and in original unopened containers.**

carboline

RPM

September 2010 replaces April 2008

To the best of our knowledge the technical data contained herein is true and accurate on the date of publication and is subject to change without prior notice. User must contact Carboline Company to verify correctness before specifying or ordering. No guarantee of accuracy is given or implied. We guarantee our products to conform to Carboline quality control. We assume no responsibility for coverage, performance or injuries resulting from use. Liability, if any, is limited to replacement of products. NO OTHER WARRANTY OR GUARANTEE OF ANY KIND IS MADE BY CARBOLINE, EXPRESS OR IMPLIED, STATUTORY, BY OPERATION OF LAW, OR OTHERWISE, INCLUDING MERCHANTABILITY AND FITNESS FOR A PARTICULAR PURPOSE. Carboline® and Phenoline® are registered trademarks of Carboline Company

PRODUCT NAME: 2030 SILICONE MOD CLEAR ENAMEL **HMIS CODES: H F R P**
PRODUCT CODE: 2030 SILCONE MOD CLEAR ENAMEL **2 3 1 Bop**

SECTION I - MANUFACTURER IDENTIFICATION

MANUFACTURER'S NAME: VALLEY PAINT MANUFACTURING
ADDRESS : 727 SOUTH 950 WEST
WOODS CROSS, UTAH 84087

EMERGENCY PHONE : 800-633-8253 **REVISION DATE :**
INFORMATION PHONE : 801-298-4581 **NAME OF PREPARER : RALPH GRIDER**

SECTION II - HAZARDOUS INGREDIENTS / SARA III INFORMATION

REPORTABLE COMPONENTS	CAS NUMBER	VAPOR PRESSURE mm Hg @ TEMP		WEIGHT PERCENT
MINERAL SPIRITS	8032-32-4	2.0	68 DEG	49
OSHA VPEL 100 PPM TWA				
ACGIH TLV 100 PPM TWA				

*** No toxic chemical(s) subject to the reporting requirements of section 313 of Title III and of 40 CFR 372 are present. ***

N = N.T.P. Carcinogen I = I.A.R.C. Carcinogen

SECTION III - PHYSICAL/CHEMICAL CHARACTERISTICS

BOILING RANGE: 300 DEG F **DENSITY (H2O=8.33): 7.63855 lb/gl**
VAPOR DENSITY: HEAVIER THAN AIR **EVAPORATION RATE: SLOWER THAN ETHER**
COATING V.O.C.: 3.75 lb/gl **450 g/l**
MATERIAL V.O.C.: 3.75 lb/gl **450 g/l**
SOLUBILITY IN WATER: Non Soluble
APPEARANCE AND ODOR: COMMON TO SOLVENT REDUCED PAINT

SECTION IV - FIRE AND EXPLOSION HAZARD DATA

FLASH POINT: 110 DEF F **METHOD USED: SETAFLASH**
FLAMMABLE LIMITS IN AIR BY VOLUME- LOWER: 1.0%(V) **UPPER: 6.0%(V)**

EXTINGUISHING MEDIA:
FOAM, ALCOHOL FOAM, CO2, DRY CHEMICAL, WATER FOG, OTHER

SPECIAL FIREFIGHTING PROCEDURES
Respiratory equipment should be worn to avoid inhalation of concentrated vapors. Water should not be used except as fog to keep nearby containers cool.

UNUSUAL FIRE AND EXPLOSION HAZARDS
Handle as flammable liquid. If material is classified as waterborne,non-flammable, non-combustible, then disregard. Vapors form an explosive mixture inair between the upper and lower explosive limits which can be ignited by many sources such as pilot lights, electrical motors and switches.

SECTION V - REACTIVITY DATA

STABILITY: STABLE

CONDITIONS TO AVOID
Excessive heat, poor ventilation, corrosive atmospheres, excessive aging.

INCOMPATIBILITY (MATERIALS TO AVOID)
Alkaline materials, strong acids and oxidizing materials.

HAZARDOUS DECOMPOSITION OR BYPRODUCTS
Carbon monoxide, carbon dioxide, oxides of nitrogen, and possibly acrolein.

HAZARDOUS POLYMERIZATION: WILL OCCUR

SECTION VI - HEALTH HAZARD DATA

INHALATION HEALTH RISKS AND SYMPTOMS OF EXPOSURE
Inhalation: Dizziness, breathing difficulty, headaches & loss of coordination.

SKIN AND EYE CONTACT HEALTH RISKS AND SYMPTOMS OF EXPOSURE
Eye contact: Severe irritation, tearing, redness and blurred vision.

SKIN ABSORPTION HEALTH RISKS AND SYMPTOMS OF EXPOSURE
Skin contact: Can dry and defat skin causing cracks, irritation, and dermatitis.

INGESTION HEALTH RISKS AND SYMPTOMS OF EXPOSURE
Ingestion: Can cause gastrointestinal irritation, vomiting, nausea, and diarrhea.

HEALTH HAZARDS (ACUTE AND CHRONIC)
Inhalation-Dizziness, breathing difficulty, headaches, & loss of coordination. Eye contact-Severe irritation, tearing, redness, and blurred vision. Skin contact-Can dry and defat skin causing cracks, irritation, and dermatitis. Ingestion-Can cause gastrointestinal irritation, vomiting, nausea, & diarrhea. No chronic health effects.

CARCINOGENICITY: NTP CARCINOGEN: No IARC MONOGRAPHS: No OSHA REGULATED: No

INFORMATION NOT AVAILABLE.

MEDICAL CONDITIONS GENERALLY AGGRAVATED BY EXPOSURE
Anesthesia, respiratory tract irritation, dermatitis, nausea, vomiting.

EMERGENCY AND FIRST AID PROCEDURES
Inhalation overexposure-Move person to fresh air. If breathing stops, apply artificial respiration and seek immediate medical attention. Eye contact-flush with large quantities of water for 15 minutes. Skin contact-Wash thoroughly with soap and water and see a doctor. Ingestion-Do not induce vomiting, can cause chemical pneumonitis and pulmonary edema.

Contact physician immediately.

SECTION VII - PRECAUTIONS FOR SAFE HANDLING AND USE

STEPS TO BE TAKEN IN CASE MATERIAL IS RELEASED OR SPILLED
Eliminate ignition sources, provide good ventilation, dike spill area and add absorbent earth or sawdust to spilled liquid. Thoroughly wet with water and mix.

WASTE DISPOSAL METHOD
Collect absorbent/water/spilled liquid mixture into metal containers and add enough water to cover. Consult local,state & federal hazardous waste regulations before disposing into approved hazardous waste landfills. Obey relevant laws.

PRECAUTIONS TO BE TAKEN IN HANDLING AND STORING
Use non-sparking utensils when handling this material. Avoid hot metal surface. Use in cool, well-ventilated areas. Keep containers closed when not in use. Keep away from excessive heat and open flames.

OTHER PRECAUTIONS
Smoking in area where this material is used should be strictly prohibited. Tools used with this material should be made from aluminum, brass or copper. Plastic utensils should not be used. NOTE: This information is accurate to the best knowledge of this company, but is furnished without any expressed or implied warranties.

SECTION VIII - CONTROL MEASURES

RESPIRATORY PROTECTION
When spraying this material use a NIOSH approved cartridge respirator or gas mask suitable to keep airborne mists and vapor concentrations below the time weighted threshold limit values. When using in poorly ventilated and confined spaces, use a fresh-air supplying respirator or a self-contained breathing apparatus.

VENTILATION
General mechanical ventilation or local exhaust should be suitable to keep vapor concentrations below TLV. Ventilation equip. must be explosion proof.

PROTECTIVE GLOVES
Impermeable chemical handling gloves for skin protection.

EYE PROTECTION
Use chemical safety glasses, goggles, and faceshields for eye protection.

OTHER PROTECTIVE CLOTHING OR EQUIPMENT
Use impermeable aprons and protective clothing whenever possible to prevent skin contact. The use of head caps whenever possible is strongly recommended.

WORK/HYGIENIC PRACTICES
Eye washes and safety showers in the workplace are recommended.

SECTION IX - SHIPPING DATA

D.O.T. PROPER SHIPPING NAME.....PAINT, FLAMMABLE LIQUID
D.O.T. HAZARD CLASS.....FLAMMABLE LIQUID
D.O.T. LABELS REQUIRED.....FLAMMABLE LIQUID
D.O.T. PLACARDS REQUIRED.....YES FLAMMABLE
BILL OF LADING DESCRIPTION.....PAINT, FLAMMABLE LIQUID
UN/NA CODE.....UN1263

SECTION X - DISCLAIMER

To the best of our knowledge, the information contained herein is accurate, obtained from sources believed by this company to be accurate.

PRODUCT NAME: 2106 WHITE SUPER SPEED ENAMEL **HMIS CODES: H F R P**
PRODUCT CODE: 2106 WHITE SUPER SPEED ENAMEL **2 3 1 Bop**

SECTION I - MANUFACTURER IDENTIFICATION

MANUFACTURER'S NAME: VALLEY PAINT MANUFACTURING
ADDRESS : 727 SOUTH 950 WEST
WOODS CROSS, UTAH 84087

EMERGENCY PHONE : 800-633-8253 **REVISION DATE : 04/11/11**
INFORMATION PHONE : 801-298-4581 **NAME OF PREPARER : RALPH GRIDER**

SECTION II - HAZARDOUS INGREDIENTS / SARA III INFORMATION

REPORTABLE COMPONENTS	CAS NUMBER	VAPOR PRESSURE mm Hg @ TEMP		WEIGHT PERCENT
* XYLENE	1330-20-7	2.4	68 DEG	41
OSHA VPEL 100 PPM TWA				
OSHA VPEL 150 PPM STEL				
ACGIH TLV 100 PPM TWA				
ACGIH TLV 150 PPM STEL				
VM&P NAPHTHA	64742-89-8	10.2	68 DEG	7.86
OSHA VPEL 300 PPM TWA				
OSHA VPEL 400 PPM STEL				
ACGIH TLV 300 PPM TWA				

* Indicates toxic chemical(s) subject to the reporting requirements of section 313 of Title III and of 40 CFR 372.

N = N.T.P. Carcinogen I = I.A.R.C. Carcinogen

SECTION III - PHYSICAL/CHEMICAL CHARACTERISTICS

BOILING RANGE: 240 DEG F - 279 DEG F **DENSITY (H2O=8.33): 9.41973 lb/gl**
VAPOR DENSITY: HEAVIER THAN AIR **EVAPORATION RATE: SLOWER THAN ETHER**
COATING V.O.C.: 4.57 lb/gl **547 g/l**
MATERIAL V.O.C.: 4.57 lb/gl **547 g/l**
SOLUBILITY IN WATER: Non Soluble
APPEARANCE AND ODOR: COMMON TO SOLVENT REDUCED PAINT

SECTION IV - FIRE AND EXPLOSION HAZARD DATA

FLASH POINT: 50 DEG F **METHOD USED: SETAFLASH**
FLAMMABLE LIMITS IN AIR BY VOLUME- LOWER: 0.9%(V) **UPPER: 7.0%(V)**

EXTINGUISHING MEDIA:
FOAM, ALCOHOL FOAM, CO2, DRY CHEMICAL, WATER FOG, OTHER

SPECIAL FIREFIGHTING PROCEDURES
Respiratory equipment should be worn to avoid inhalation of concentrated vapors. Water should not be used except as fog to keep nearby containers cool.

UNUSUAL FIRE AND EXPLOSION HAZARDS
Handle as flammable liquid. If material is classified as waterborne,non-flammable, non-combustible, then disregard. Vapors form an explosive mixture inair between the upper and lower explosive limits which can be ignited by many sources such as pilot lights, electrical motors and switches.

SECTION V - REACTIVITY DATA

STABILITY: STABLE
CONDITIONS TO AVOID
Excessive heat, poor ventilation, corrosive atmospheres, excessive aging.

INCOMPATIBILITY (MATERIALS TO AVOID)
Alkaline materials, strong acids and oxidizing materials.

HAZARDOUS DECOMPOSITION OR BYPRODUCTS
Carbon monoxide, carbon dioxide, oxides of nitrogen, and possibly acrolein.

HAZARDOUS POLYMERIZATION: WILL OCCUR

SECTION VI - HEALTH HAZARD DATA

INHALATION HEALTH RISKS AND SYMPTOMS OF EXPOSURE
Inhalation: Dizziness, breathing difficulty, headaches & loss of coordination.

SKIN AND EYE CONTACT HEALTH RISKS AND SYMPTOMS OF EXPOSURE
Eye contact: Severe irritation, tearing, redness and blurred vision.

SKIN ABSORPTION HEALTH RISKS AND SYMPTOMS OF EXPOSURE
Skin contact: Can dry and defat skin causing cracks, irritation, and dermatitis.

INGESTION HEALTH RISKS AND SYMPTOMS OF EXPOSURE
Ingestion: Can cause gastrointestinal irritation, vomiting, nausea, and diarrhea.

HEALTH HAZARDS (ACUTE AND CHRONIC)
Inhalation-Dizziness, breathing difficulty, headaches, & loss of coordination. Eye contact-Severe irritation, tearing, redness, and blurred vision. Skin contact-Can dry and defat skin causing cracks, irritation, and dermatitis. Ingestion-Can cause gastrointestinal irritation, vomiting, nausea, & diarrhea. No chronic health effects.

CARCINOGENICITY: NTP CARCINOGEN: No IARC MONOGRAPHS: No OSHA REGULATED: No

INFORMATION NOT AVAILABLE.

MEDICAL CONDITIONS GENERALLY AGGRAVATED BY EXPOSURE

Anesthesia, respiratory tract irritation, dermatitis, nausea, vomiting.

EMERGENCY AND FIRST AID PROCEDURES

Inhalation overexposure-Move person to fresh air. If breathing stops, apply artificial respiration and seek immediate medical attention. Eye contact-flush with large quantities of water for 15 minutes. Skin contact-Wash thoroughly with soap and water and see a doctor. Ingestion-Do not induce vomiting, can cause chemical pneumonitis and pulmonary edema. Contact physician immediately.

SECTION VII - PRECAUTIONS FOR SAFE HANDLING AND USE

STEPS TO BE TAKEN IN CASE MATERIAL IS RELEASED OR SPILLED

Eliminate ignition sources, provide good ventilation, dike spill area and add absorbent earth or sawdust to spilled liquid. Thoroughly wet with water and mix.

WASTE DISPOSAL METHOD

Collect absorbent/water/spilled liquid mixture into metal containers and add enough water to cover. Consult local,state & federal hazardous waste regulations before disposing into approved hazardous waste landfills. Obey relevant laws.

PRECAUTIONS TO BE TAKEN IN HANDLING AND STORING

Use non-sparking utensils when handling this material. Avoid hot metal surface. Use in cool, well-ventilated areas. Keep containers closed when not in use. Keep away from excessive heat and open flames.

OTHER PRECAUTIONS

Smoking in area where this material is used should be strictly prohibited. Tools used with this material should be made from aluminum, brass or copper. Plastic utensils should not be used. NOTE: This information is accurate to the best knowledge of this company, but is furnished without any expressed or implied warranties.

SECTION VIII - CONTROL MEASURES

RESPIRATORY PROTECTION

When spraying this material use a NIOSH approved cartridge respirator or gas mask suitable to keep airborne mists and vapor concentrations below the time weighted threshold limit values. When using in poorly ventilated and confined spaces, use a fresh-air supplying respirator or a self-contained breathing apparatus.

VENTILATION

General mechanical ventilation or local exhaust should be suitable to keep vapor concentrations below TLV. Ventilation equip. must be explosion proof.

PROTECTIVE GLOVES

Impermeable chemical handling gloves for skin protection.

EYE PROTECTION

Use chemical safety glasses, goggles, and faceshields for eye protection.

OTHER PROTECTIVE CLOTHING OR EQUIPMENT

Use impermeable aprons and protective clothing whenever possible to prevent skin contact. The use of head caps whenever possible is strongly recommended.

WORK/HYGIENIC PRACTICES
Eye washes and safety showers in the workplace are recommended.

SECTION IX - SHIPPING DATA

D.O.T. PROPER SHIPPING NAME.....PAINT, FLAMMABLE LIQUID
D.O.T. HAZARD CLASS.....FLAMMABLE LIQUID
D.O.T. LABELS REQUIRED.....FLAMMABLE LIQUID
D.O.T. PLACARDS REQUIRED.....YES FLAMMABLE
BILL OF LADING DESCRIPTION.....PAINT, FLAMMABLE LIQUID
UN/NA CODE.....UN1263

SECTION X - DISCLAIMER

To the best of our knowledge, the information contained herein is accurate, obtained from sources believed by this company to be accurate.

PRODUCT NAME: 2126 GLOSS WHITE SILICONE EN **HMIS CODES: H F R P**
PRODUCT CODE: 2126 GLOSS WHITE SILICONE EN **2 3 1 Bop**

SECTION I - MANUFACTURER IDENTIFICATION

MANUFACTURER'S NAME: VALLEY PAINT MANUFACTURING
ADDRESS : 727 SOUTH 950 WEST
WOODS CROSS, UTAH 84087

EMERGENCY PHONE : 800-633-8253 **REVISION DATE : 04/11/11**
INFORMATION PHONE : 801-298-4581 **NAME OF PREPARER : RALPH GRIDER**

SECTION II - HAZARDOUS INGREDIENTS / SARA III INFORMATION

REPORTABLE COMPONENTS	CAS NUMBER	VAPOR PRESSURE mm Hg @ TEMP		WEIGHT PERCENT
MINERAL SPIRITS	8032-32-4	2.0	68 DEG	33
OSHA VPEL 100 PPM TWA				
ACGIH TLV 100 PPM TWA				
PAINT ADDITIVE	NA	3	68 DEG	1

*** No toxic chemical(s) subject to the reporting requirements of section 313 of Title III and of 40 CFR 372 are present. ***

N = N.T.P. Carcinogen I = I.A.R.C. Carcinogen

SECTION III - PHYSICAL/CHEMICAL CHARACTERISTICS

BOILING RANGE: 287 DEG F - 300 DEG F **DENSITY (H2O=8.33): 10.00372 lb/gl**
VAPOR DENSITY: HEAVIER THAN AIR **EVAPORATION RATE: SLOWER THAN ETHER**
COATING V.O.C.: 3.29 lb/gl **394 g/l**
MATERIAL V.O.C.: 3.29 lb/gl **394 g/l**
SOLUBILITY IN WATER: Non Soluble
APPEARANCE AND ODOR: COMMON TO SOLVENT REDUCED PAINT

SECTION IV - FIRE AND EXPLOSION HAZARD DATA

FLASH POINT: 105 DEG F **METHOD USED: SETAFLASH**
FLAMMABLE LIMITS IN AIR BY VOLUME- LOWER: 1.0%(V) **UPPER: 8.8%(V)**

EXTINGUISHING MEDIA:
FOAM, ALCOHOL FOAM, CO2, DRY CHEMICAL, WATER FOG, OTHER

SPECIAL FIREFIGHTING PROCEDURES
Respiratory equipment should be worn to avoid inhalation of concentrated vapors. Water should not be used except as fog to keep nearby containers cool.

UNUSUAL FIRE AND EXPLOSION HAZARDS
Handle as flammable liquid. If material is classified as waterborne, non-flammable, non-combustible, then disregard. Vapors form an explosive mixture inair between the upper and lower explosive limits which can be ignited by many sources such as pilot lights, electrical motors and switches.

SECTION V - REACTIVITY DATA

STABILITY: STABLE
CONDITIONS TO AVOID
Excessive heat, poor ventilation, corrosive atmospheres, excessive aging.

INCOMPATIBILITY (MATERIALS TO AVOID)
Alkaline materials, strong acids and oxidizing materials.

HAZARDOUS DECOMPOSITION OR BYPRODUCTS
Carbon monoxide, carbon dioxide, oxides of nitrogen, and possibly acrolein.

HAZARDOUS POLYMERIZATION: WILL OCCUR

SECTION VI - HEALTH HAZARD DATA

INHALATION HEALTH RISKS AND SYMPTOMS OF EXPOSURE
Inhalation: Dizziness, breathing difficulty, headaches & loss of coordination.

SKIN AND EYE CONTACT HEALTH RISKS AND SYMPTOMS OF EXPOSURE
Eye contact: Severe irritation, tearing, redness and blurred vision.

SKIN ABSORPTION HEALTH RISKS AND SYMPTOMS OF EXPOSURE
Skin contact: Can dry and defat skin causing cracks, irritation, and dermatitis.

INGESTION HEALTH RISKS AND SYMPTOMS OF EXPOSURE
Ingestion: Can cause gastrointestinal irritation, vomiting, nausea, and diarrhea.

HEALTH HAZARDS (ACUTE AND CHRONIC)
Inhalation-Dizziness, breathing difficulty, headaches, & loss of coordination. Eye contact-Severe irritation, tearing, redness, and blurred vision. Skin contact-Can dry and defat skin causing cracks, irritation, and dermatitis. Ingestion-Can cause gastrointestinal irritation, vomiting, nausea, & diarrhea. No chronic health effects.

CARCINOGENICITY: NTP CARCINOGEN: No IARC MONOGRAPHS: No OSHA REGULATED: No

INFORMATION NOT AVAILABLE.

MEDICAL CONDITIONS GENERALLY AGGRAVATED BY EXPOSURE
Anesthesia, respiratory tract irritation, dermatitis, nausea, vomiting.

EMERGENCY AND FIRST AID PROCEDURES
Inhalation overexposure-Move person to fresh air. If breathing stops, apply artificial respiration and seek immediate medical attention. Eye contact-flush with large quantities of water for 15 minutes. Skin contact-Wash thoroughly with

soap and water and see a doctor. Ingestion-Do not induce vomiting, can cause chemical pneumonitis and pulmonary edema. Contact physician immediately.

SECTION VII - PRECAUTIONS FOR SAFE HANDLING AND USE

STEPS TO BE TAKEN IN CASE MATERIAL IS RELEASED OR SPILLED
Eliminate ignition sources, provide good ventilation, dike spill area and add absorbent earth or sawdust to spilled liquid. Thoroughly wet with water and mix.

WASTE DISPOSAL METHOD
Collect absorbent/water/spilled liquid mixture into metal containers and add enough water to cover. Consult local,state & federal hazardous waste regulations before disposing into approved hazardous waste landfills. Obey relevant laws.

PRECAUTIONS TO BE TAKEN IN HANDLING AND STORING
Use non-sparking utensils when handling this material. Avoid hot metal surface. Use in cool, well-ventilated areas. Keep containers closed when not in use. Keep away from excessive heat and open flames.

OTHER PRECAUTIONS
Smoking in area where this material is used should be strictly prohibited. Tools used with this material should be made from aluminum, brass or copper. Plastic utensils should not be used. NOTE: This information is accurate to the best knowledge of this company, but is furnished without any expressed or implied warranties.

SECTION VIII - CONTROL MEASURES

RESPIRATORY PROTECTION
When spraying this material use a NIOSH approved cartridge respirator or gas mask suitable to keep airborne mists and vapor concentrations below the time weighted threshold limit values. When using in poorly ventilated and confined spaces, use a fresh-air supplying respirator or a self-contained breathing apparatus.

VENTILATION
General mechanical ventilation or local exhaust should be suitable to keep vapor concentrations below TLV. Ventilation equip. must be explosion proof.

PROTECTIVE GLOVES
Impermeable chemical handling gloves for skin protection.

EYE PROTECTION
Use chemical safety glasses, goggles, and faceshields for eye protection.

OTHER PROTECTIVE CLOTHING OR EQUIPMENT
Use impermeable aprons and protective clothing whenever possible to prevent skin contact. The use of head caps whenever possible is strongly recommended.

WORK/HYGIENIC PRACTICES

Eye washes and safety showers in the workplace are recommended.

SECTION IX - SHIPPING DATA

D.O.T. PROPER SHIPPING NAME.....PAINT, FLAMMABLE LIQUID
D.O.T. HAZARD CLASS.....FLAMMABLE LIQUID
D.O.T. LABELS REQUIRED.....FLAMMABLE LIQUID
D.O.T. PLACARDS REQUIRED.....YES FLAMMABLE
BILL OF LADING DESCRIPTION.....PAINT, FLAMMABLE LIQUID
UN/NA CODE.....UN1263

SECTION X - DISCLAIMER

To the best of our knowledge, the information contained herein is accurate, obtained from sources believed by this company to be accurate.

PRODUCT NAME: 2101 KM WHITE PRIMER
PRODUCT CODE: 2101 KM WHITE PRIMER

HMIS CODES: H F R P
2 3 1 Bopt

SECTION I - MANUFACTURER IDENTIFICATION

MANUFACTURER'S NAME: VALLEY PAINT MANUFACTURING
ADDRESS : 727 SOUTH 950 WEST
WOODS CROSS, UTAH 84087

EMERGENCY PHONE : 800-633-8253
INFORMATION PHONE : 801-298-4581
REVISION DATE : 07/18/11
NAME OF PREPARER : RALPH GRIDER

SECTION II - HAZARDOUS INGREDIENTS / SARA III INFORMATION

REPORTABLE COMPONENTS	CAS NUMBER	VAPOR PRESSURE mm Hg @ TEMP		WEIGHT PERCENT
* XYLENE	1330-20-7	2.4	68 DEG	22
OSHA VPEL 100 PPM TWA				
OSHA VPEL 150 PPM STEL				
ACGIH TLV 100 PPM TWA				
ACGIH TLV 150 PPM STEL				
VM&P NAPHTHA	64742-89-8	10.2	68 DEG	12.33
OSHA VPEL 300 PPM TWA				
OSHA VPEL 400 PPM STEL				
ACGIH TLV 300 PPM TWA				

* Indicates toxic chemical(s) subject to the reporting requirements of section 313 of Title III and of 40 CFR 372.

N = N.T.P. Carcinogen I = I.A.R.C. Carcinogen

SECTION III - PHYSICAL/CHEMICAL CHARACTERISTICS

BOILING RANGE: 240 DEG F - 279 DEG F
DENSITY (H2O=8.33): 10.489 lb/gl
VAPOR DENSITY: HEAVIER THAN AIR
EVAPORATION RATE: SLOWER THAN ETHER
COATING V.O.C.: 3.83 lb/gl
459 g/l
MATERIAL V.O.C.: 3.83 lb/gl
459 g/l
SOLUBILITY IN WATER: Non Soluble
APPEARANCE AND ODOR: COMMON TO SOLVENT REDUCED PAINT

SECTION IV - FIRE AND EXPLOSION HAZARD DATA

FLASH POINT: 50 DEG F
METHOD USED: SETAFLASH
FLAMMABLE LIMITS IN AIR BY VOLUME- LOWER: 0.9%(V)
UPPER: 7.0%(V)

EXTINGUISHING MEDIA:
FOAM, ALCOHOL FOAM, CO2, DRY CHEMICAL, WATER FOG, OTHER

SPECIAL FIREFIGHTING PROCEDURES
Respiratory equipment should be worn to avoid inhalation of concentrated vapors. Water should not be used except as fog to keep nearby containers cool.

UNUSUAL FIRE AND EXPLOSION HAZARDS
Handle as flammable liquid. If material is classified as waterborne,non-flammable, non-combustible, then disregard. Vapors form an explosive mixture inair between the upper and lower explosive limits which can be ignited by many sources such as pilot lights, electrical motors and switches.

SECTION V - REACTIVITY DATA

STABILITY: STABLE
CONDITIONS TO AVOID
Excessive heat, poor ventilation, corrosive atmospheres, excessive aging.

INCOMPATIBILITY (MATERIALS TO AVOID)
Alkaline materials, strong acids and oxidizing materials.

HAZARDOUS DECOMPOSITION OR BYPRODUCTS
Carbon monoxide, carbon dioxide, oxides of nitrogen, and possibly acrolein.

HAZARDOUS POLYMERIZATION: WILL OCCUR

SECTION VI - HEALTH HAZARD DATA

INHALATION HEALTH RISKS AND SYMPTOMS OF EXPOSURE
Inhalation: Dizziness, breathing difficulty, headaches & loss of coordination.

SKIN AND EYE CONTACT HEALTH RISKS AND SYMPTOMS OF EXPOSURE
Eye contact: Severe irritation, tearing, redness and blurred vision.

SKIN ABSORPTION HEALTH RISKS AND SYMPTOMS OF EXPOSURE
Skin contact: Can dry and defat skin causing cracks, irritation, and dermatitis.

INGESTION HEALTH RISKS AND SYMPTOMS OF EXPOSURE
Ingestion: Can cause gastrointestinal irritation, vomiting, nausea, and diarrhea.

HEALTH HAZARDS (ACUTE AND CHRONIC)
Inhalation-Dizziness, breathing difficulty, headaches, & loss of coordination. Eye contact-Severe irritation, tearing, redness, and blurred vision. Skin contact-Can dry and defat skin causing cracks, irritation, and dermatitis. Ingestion-Can cause gastrointestinal irritation, vomiting, nausea, & diarrhea. No chronic health effects.

CARCINOGENICITY: NTP CARCINOGEN: No IARC MONOGRAPHS: No OSHA REGULATED: No

INFORMATION NOT AVAILABLE.

MEDICAL CONDITIONS GENERALLY AGGRAVATED BY EXPOSURE

Anesthesia, respiratory tract irritation, dermatitis, nausea, vomiting.

EMERGENCY AND FIRST AID PROCEDURES

Inhalation overexposure-Move person to fresh air. If breathing stops, apply artificial respiration and seek immediate medical attention. Eye contact-flush with large quantities of water for 15 minutes. Skin contact-Wash thoroughly with soap and water and see a doctor. Ingestion-Do not induce vomiting, can cause chemical pneumonitis and pulmonary edema. Contact physician immediately.

SECTION VII - PRECAUTIONS FOR SAFE HANDLING AND USE

STEPS TO BE TAKEN IN CASE MATERIAL IS RELEASED OR SPILLED

Eliminate ignition sources, provide good ventilation, dike spill area and add absorbent earth or sawdust to spilled liquid. Thoroughly wet with water and mix.

WASTE DISPOSAL METHOD

Collect absorbent/water/spilled liquid mixture into metal containers and add enough water to cover. Consult local,state & federal hazardous waste regulations before disposing into approved hazardous waste landfills. Obey relevant laws.

PRECAUTIONS TO BE TAKEN IN HANDLING AND STORING

Use non-sparking utensils when handling this material. Avoid hot metal surface. Use in cool, well-ventilated areas. Keep containers closed when not in use. Keep away from excessive heat and open flames.

OTHER PRECAUTIONS

Smoking in area where this material is used should be strictly prohibited. Tools used with this material should be made from aluminum, brass or copper. Plastic utensils should not be used. NOTE: This information is accurate to the best knowledge of this company, but is furnished without any expressed or implied warranties.

SECTION VIII - CONTROL MEASURES

RESPIRATORY PROTECTION

When spraying this material use a NIOSH approved cartridge respirator or gas mask suitable to keep airborne mists and vapor concentrations below the time weighted threshold limit values. When using in poorly ventilated and confined spaces, use a fresh-air supplying respirator or a self-contained breathing apparatus.

VENTILATION

General mechanical ventilation or local exhaust should be suitable to keep vapor concentrations below TLV. Ventilation equip. must be explosion proof.

PROTECTIVE GLOVES

Impermeable chemical handling gloves for skin protection.

EYE PROTECTION

Use chemical safety glasses, goggles, and faceshields for eye protection.

OTHER PROTECTIVE CLOTHING OR EQUIPMENT

Use impermeable aprons and protective clothing whenever possible to prevent skin contact. The use of head caps whenever possible is strongly recommended.

WORK/HYGIENIC PRACTICES
Eye washes and safety showers in the workplace are recommended.

SECTION IX - SHIPPING DATA

D.O.T. PROPER SHIPPING NAME.....PAINT, FLAMMABLE LIQUID
D.O.T. HAZARD CLASS.....FLAMMABLE LIQUID
D.O.T. LABELS REQUIRED.....FLAMMABLE LIQUID
D.O.T. PLACARDS REQUIRED.....YES FLAMMABLE
BILL OF LADING DESCRIPTION.....PAINT, FLAMMABLE LIQUID
UN/NA CODE.....UN1263

SECTION X - DISCLAIMER

To the best of our knowledge, the information contained herein is accurate, obtained from sources believed by this company to be accurate.

PRODUCT NAME: 2001 URETHANE ACTIVATOR **HMIS CODES: H F R P**
PRODUCT CODE: 2001 URETHANE ACTIVATOR **2 3 1 Bop**

SECTION I - MANUFACTURER IDENTIFICATION

MANUFACTURER'S NAME: VALLEY PAINT MANUFACTURING
ADDRESS : 727 SOUTH 950 WEST
WOODS CROSS, UTAH 84087

EMERGENCY PHONE : 800-633-8253 **REVISION DATE :**
INFORMATION PHONE : 801-298-4581 **NAME OF PREPARER : RALPH GRIDER**

SECTION II - HAZARDOUS INGREDIENTS / SARA III INFORMATION

REPORTABLE COMPONENTS	CAS NUMBER	VAPOR PRESSURE mm Hg @ TEMP		WEIGHT PERCENT
HEXANE, 1,6-DIISOCYANATO-,HOMOPOLYMER	28182-81-2	NA	NA	58.47
RPI 1 MG/CU M TWA STEL (15 MIN) ACGIH 0.005 PPM TWA STEL OSHA PEL/TWA 0.5 MG/M3 OSHA STEL 1.0 MG/M3 (15 MIN) THIS PRODUCT IS NOT CONSIDERED A CARCINOGEN UNDER OSHA REGULATIONS. EYES: STAIN FOR EVIDENCE OF CORNEAL INJURY. IF CORNEA IS BURNED, INSTILL ANTIBIOTIC/STERIOD PREPERATION FREQUENTLY. WORKPLACE VAPORS COULD PRODUCE REVERSIBLE CORNEAL EPITHELIAL EDEMA IMPARING VISION. SKIN: THIS PRODUCT IS A KNOWN SKIN SENSITIZER. TREAT SYMPTOMATICALLY FOR CONTACT DERMATITIS OR THERMAL BURN. iNDEGESTION: TREAT SYMPTOMATICALLY. THERE IS NO SPECIFIC ANTIDOTE. INHALATION: THIS PRODUCT IS A KNOWN PULMONARY SENSITIZER. TREATMENT IS ESSENTIALLY SYMPTOMATIC. AN INDIVIDUAL HAVING A DERMAL OR PULMONARY SENSITZATION REACTION TO THIS MATERIAL MUST BE REMOVED FROM ANY FURTHER EXPOSURE TO ISOCYANATE.				
* AROMATIC HYDROCARBON	64742-95-6	3.0	68 DEG	21
* XYLENE	1330-20-7	2.4	68 DEG	20
OSHA VPEL 100 PPM TWA OSHA VPEL 150 PPM STEL ACGIH TLV 100 PPM TWA ACGIH TLV 150 PPM STEL				

* Indicates toxic chemical(s) subject to the reporting requirements of section 313 of Title III and of 40 CFR 372.

N = N.T.P. Carcinogen I = I.A.R.C. Carcinogen

SECTION III - PHYSICAL/CHEMICAL CHARACTERISTICS

BOILING RANGE: 279 DEG F - 397 DEG F **DENSITY (H2O=8.33): 8.48334 lb/gl**
VAPOR DENSITY: HEAVIER THAN AIR **EVAPORATION RATE: SLOWER THAN ETHER**

COATING V.O.C.: 3.52 lb/gl **422 g/l**
MATERIAL V.O.C.: 3.52 lb/gl **422 g/l**
SOLUBILITY IN WATER: Non Soluble
APPEARANCE AND ODOR: COMMON TO SOLVENT REDUCED PAINT

SECTION IV - FIRE AND EXPLOSION HAZARD DATA

FLASH POINT: 80 DEG F **METHOD USED: SETAFLASH**
FLAMMABLE LIMITS IN AIR BY VOLUME- LOWER: 1.0%(V) **UPPER: 7.0%(V)**

EXTINGUISHING MEDIA:
FOAM, ALCOHOL FOAM, CO2, DRY CHEMICAL, WATER FOG, OTHER

SPECIAL FIREFIGHTING PROCEDURES
Respiratory equipment should be worn to avoid inhalation of concentrated vapors. Water should not be used except as fog to keep nearby containers cool.

UNUSUAL FIRE AND EXPLOSION HAZARDS
Handle as flammable liquid. If material is classified as waterborne, non-flammable, non-combustible, then disregard. Vapors form an explosive mixture inair between the upper and lower explosive limits which can be ignited by many sources such as pilot lights, electrical motors and switches.

SECTION V - REACTIVITY DATA

STABILITY: STABLE
CONDITIONS TO AVOID
Excessive heat, poor ventilation, corrosive atmospheres, excessive aging.

INCOMPATIBILITY (MATERIALS TO AVOID)
Alkaline materials, strong acids and oxidizing materials.

HAZARDOUS DECOMPOSITION OR BYPRODUCTS
Carbon monoxide, carbon dioxide, oxides of nitrogen, and possibly acrolein.

HAZARDOUS POLYMERIZATION: WILL OCCUR

SECTION VI - HEALTH HAZARD DATA

INHALATION HEALTH RISKS AND SYMPTOMS OF EXPOSURE
Inhalation: Dizziness, breathing difficulty, headaches & loss of coordination.

SKIN AND EYE CONTACT HEALTH RISKS AND SYMPTOMS OF EXPOSURE
Eye contact: Severe irritation, tearing, redness and blurred vision.

SKIN ABSORPTION HEALTH RISKS AND SYMPTOMS OF EXPOSURE
Skin contact: Can dry and defat skin causing cracks, irritation, and dermatitis.

INGESTION HEALTH RISKS AND SYMPTOMS OF EXPOSURE
Ingestion: Can cause gastrointestinal irritation, vomiting, nausea, and diarrhea.

HEALTH HAZARDS (ACUTE AND CHRONIC)
Inhalation-Dizziness, breathing difficulty, headaches, & loss of coordination. Eye contact-Severe irritation, tearing, redness, and blurred vision. Skin contact-Can dry and defat skin causing cracks, irritation, and dermatitis. Ingestion-Can cause gastrointestinal irritation, vomiting, nausea, & diarrhea. No chronic health effects.

CARCINOGENICITY: NTP CARCINOGEN: No IARC MONOGRAPHS: No OSHA REGULATED: No

INFORMATION NOT AVAILABLE.

MEDICAL CONDITIONS GENERALLY AGGRAVATED BY EXPOSURE
Anesthesia, respiratory tract irritation, dermatitis, nausea, vomiting.

EMERGENCY AND FIRST AID PROCEDURES
Inhalation overexposure-Move person to fresh air. If breathing stops, apply artificial respiration and seek immediate medical attention. Eye contact-flush with large quantities of water for 15 minutes. Skin contact-Wash thoroughly with soap and water and see a doctor. Ingestion-Do not induce vomiting, can cause chemical pneumonitis and pulmonary edema. Contact physician immediately.

SECTION VII - PRECAUTIONS FOR SAFE HANDLING AND USE

STEPS TO BE TAKEN IN CASE MATERIAL IS RELEASED OR SPILLED
Eliminate ignition sources, provide good ventilation, dike spill area and add absorbent earth or sawdust to spilled liquid. Thoroughly wet with water and mix.

WASTE DISPOSAL METHOD
Collect absorbent/water/spilled liquid mixture into metal containers and add enough water to cover. Consult local,state & federal hazardous waste regulations before disposing into approved hazardous waste landfills. Obey relevant laws.

PRECAUTIONS TO BE TAKEN IN HANDLING AND STORING
Use non-sparking utensils when handling this material. Avoid hot metal surface. Use in cool, well-ventilated areas. Keep containers closed when not in use. Keep away from excessive heat and open flames.

OTHER PRECAUTIONS
Smoking in area where this material is used should be strictly prohibited. Tools used with this material should be made from aluminum, brass or copper. Plastic utensils should not be used. NOTE: This information is accurate to the best knowledge of this company, but is furnished without any expressed or implied warranties.

SECTION VIII - CONTROL MEASURES

RESPIRATORY PROTECTION
When spraying this material use a NIOSH approved cartridge respirator or gas mask suitable to keep airborne mists and vapor concentrations below the time weighted threshold limit values. When using in poorly ventilated and confined spaces, use a fresh-air supplying respirator or a self-contained breathing apparatus.

VENTILATION
General mechanical ventilation or local exhaust should be suitable to keep vapor concentrations below TLV. Ventilation equip. must be explosion proof.

PROTECTIVE GLOVES
Impermeable chemical handling gloves for skin protection.

EYE PROTECTION
Use chemical safety glasses, goggles, and faceshields for eye protection.

OTHER PROTECTIVE CLOTHING OR EQUIPMENT
Use impermeable aprons and protective clothing whenever possible to prevent skin contact. The use of head caps whenever possible is strongly recommended.

WORK/HYGIENIC PRACTICES
Eye washes and safety showers in the workplace are recommended.

SECTION IX - SHIPPING DATA

D.O.T. PROPER SHIPPING NAME.....PAINT, FLAMMABLE LIQUID
D.O.T. HAZARD CLASS.....FLAMMABLE LIQUID
D.O.T. LABELS REQUIRED.....FLAMMABLE LIQUID
D.O.T. PLACARDS REQUIRED.....YES FLAMMABLE
BILL OF LADING DESCRIPTION.....PAINT, FLAMMABLE LIQUID
UN/NA CODE.....UN1263

SECTION X - DISCLAIMER

To the best of our knowledge, the information contained herein is accurate, obtained from sources believed by this company to be accurate.

PRODUCT NAME: 003 GRAY PRIMER
PRODUCT CODE: 003 GRAY PRIMER

HMIS CODES: H F R P
2 3 1 Bopt

SECTION I - MANUFACTURER IDENTIFICATION

MANUFACTURER'S NAME: VALLEY PAINT MANUFACTURING
ADDRESS : 727 SOUTH 950 WEST
WOODS CROSS, UTAH 84087

EMERGENCY PHONE : 800-633-8253
INFORMATION PHONE : 801-298-4581
REVISION DATE : 08/29/11
NAME OF PREPARER : RALPH GRIDER

SECTION II - HAZARDOUS INGREDIENTS / SARA III INFORMATION

REPORTABLE COMPONENTS	CAS NUMBER	VAPOR PRESSURE mm Hg @ TEMP		WEIGHT PERCENT
* XYLENE	1330-20-7	2.4	68 DEG	23
OSHA VPEL 100 PPM TWA				
OSHA VPEL 150 PPM STEL				
ACGIH TLV 100 PPM TWA				
ACGIH TLV 150 PPM STEL				
VM&P NAPHTHA	64742-89-8	10.2	68 DEG	12.68
OSHA VPEL 300 PPM TWA				
OSHA VPEL 400 PPM STEL				
ACGIH TLV 300 PPM TWA				

* Indicates toxic chemical(s) subject to the reporting requirements of section 313 of Title III and of 40 CFR 372.

N = N.T.P. Carcinogen I = I.A.R.C. Carcinogen

SECTION III - PHYSICAL/CHEMICAL CHARACTERISTICS

BOILING RANGE: 240 DEG F - 279 DEG F
DENSITY (H2O=8.33): 10.1988 lb/gl
VAPOR DENSITY: HEAVIER THAN AIR
EVAPORATION RATE: SLOWER THAN ETHER
COATING V.O.C.: 3.88 lb/gl
464 g/l
MATERIAL V.O.C.: 3.88 lb/gl
464 g/l
SOLUBILITY IN WATER: Non Soluble
APPEARANCE AND ODOR: COMMON TO SOLVENT REDUCED PAINT

SECTION IV - FIRE AND EXPLOSION HAZARD DATA

FLASH POINT: 50 DEG F
METHOD USED: SETAFLASH
FLAMMABLE LIMITS IN AIR BY VOLUME- LOWER: 0.9%(V)
UPPER: 7.0%(V)

EXTINGUISHING MEDIA:
FOAM, ALCOHOL FOAM, CO2, DRY CHEMICAL, WATER FOG, OTHER

SPECIAL FIREFIGHTING PROCEDURES
Respiratory equipment should be worn to avoid inhalation of concentrated vapors. Water should not be used except as fog to keep nearby containers cool.

UNUSUAL FIRE AND EXPLOSION HAZARDS
Handle as flammable liquid. If material is classified as waterborne,non-flammable, non-combustible, then disregard. Vapors form an explosive mixture inair between the upper and lower explosive limits which can be ignited by many sources such as pilot lights, electrical motors and switches.

SECTION V - REACTIVITY DATA

STABILITY: STABLE
CONDITIONS TO AVOID
Excessive heat, poor ventilation, corrosive atmospheres, excessive aging.

INCOMPATIBILITY (MATERIALS TO AVOID)
Alkaline materials, strong acids and oxidizing materials.

HAZARDOUS DECOMPOSITION OR BYPRODUCTS
Carbon monoxide, carbon dioxide, oxides of nitrogen, and possibly acrolein.

HAZARDOUS POLYMERIZATION: WILL OCCUR

SECTION VI - HEALTH HAZARD DATA

INHALATION HEALTH RISKS AND SYMPTOMS OF EXPOSURE
Inhalation: Dizziness, breathing difficulty, headaches & loss of coordination.

SKIN AND EYE CONTACT HEALTH RISKS AND SYMPTOMS OF EXPOSURE
Eye contact: Severe irritation, tearing, redness and blurred vision.

SKIN ABSORPTION HEALTH RISKS AND SYMPTOMS OF EXPOSURE
Skin contact: Can dry and defat skin causing cracks, irritation, and dermatitis.

INGESTION HEALTH RISKS AND SYMPTOMS OF EXPOSURE
Ingestion: Can cause gastrointestinal irritation, vomiting, nausea, and diarrhea.

HEALTH HAZARDS (ACUTE AND CHRONIC)
Inhalation-Dizziness, breathing difficulty, headaches, & loss of coordination. Eye contact-Severe irritation, tearing, redness, and blurred vision. Skin contact-Can dry and defat skin causing cracks, irritation, and dermatitis. Ingestion-Can cause gastrointestinal irritation, vomiting, nausea, & diarrhea. No chronic health effects.

CARCINOGENICITY: NTP CARCINOGEN: No IARC MONOGRAPHS: No OSHA REGULATED: No

INFORMATION NOT AVAILABLE.

MEDICAL CONDITIONS GENERALLY AGGRAVATED BY EXPOSURE

Anesthesia, respiratory tract irritation, dermatitis, nausea, vomiting.

EMERGENCY AND FIRST AID PROCEDURES

Inhalation overexposure-Move person to fresh air. If breathing stops, apply artificial respiration and seek immediate medical attention. Eye contact-flush with large quantities of water for 15 minutes. Skin contact-Wash thoroughly with soap and water and see a doctor. Ingestion-Do not induce vomiting, can cause chemical pneumonitis and pulmonary edema. Contact physician immediately.

SECTION VII - PRECAUTIONS FOR SAFE HANDLING AND USE

STEPS TO BE TAKEN IN CASE MATERIAL IS RELEASED OR SPILLED

Eliminate ignition sources, provide good ventilation, dike spill area and add absorbent earth or sawdust to spilled liquid. Thoroughly wet with water and mix.

WASTE DISPOSAL METHOD

Collect absorbent/water/spilled liquid mixture into metal containers and add enough water to cover. Consult local,state & federal hazardous waste regulations before disposing into approved hazardous waste landfills. Obey relevant laws.

PRECAUTIONS TO BE TAKEN IN HANDLING AND STORING

Use non-sparking utensils when handling this material. Avoid hot metal surface. Use in cool, well-ventilated areas. Keep containers closed when not in use. Keep away from excessive heat and open flames.

OTHER PRECAUTIONS

Smoking in area where this material is used should be strictly prohibited. Tools used with this material should be made from aluminum, brass or copper. Plastic utensils should not be used. NOTE: This information is accurate to the best knowledge of this company, but is furnished without any expressed or implied warranties.

SECTION VIII - CONTROL MEASURES

RESPIRATORY PROTECTION

When spraying this material use a NIOSH approved cartridge respirator or gas mask suitable to keep airborne mists and vapor concentrations below the time weighted threshold limit values. When using in poorly ventilated and confined spaces, use a fresh-air supplying respirator or a self-contained breathing apparatus.

VENTILATION

General mechanical ventilation or local exhaust should be suitable to keep vapor concentrations below TLV. Ventilation equip. must be explosion proof.

PROTECTIVE GLOVES

Impermeable chemical handling gloves for skin protection.

EYE PROTECTION

Use chemical safety glasses, goggles, and faceshields for eye protection.

OTHER PROTECTIVE CLOTHING OR EQUIPMENT

Use impermeable aprons and protective clothing whenever possible to prevent skin contact. The use of head caps whenever possible is strongly recommended.

WORK/HYGIENIC PRACTICES
Eye washes and safety showers in the workplace are recommended.

SECTION IX - SHIPPING DATA

D.O.T. PROPER SHIPPING NAME.....PAINT, FLAMMABLE LIQUID
D.O.T. HAZARD CLASS.....FLAMMABLE LIQUID
D.O.T. LABELS REQUIRED.....FLAMMABLE LIQUID
D.O.T. PLACARDS REQUIRED.....YES FLAMMABLE
BILL OF LADING DESCRIPTION.....PAINT, FLAMMABLE LIQUID
UN/NA CODE.....UN1263

SECTION X - DISCLAIMER

To the best of our knowledge, the information contained herein is accurate, obtained from sources believed by this company to be accurate.

VALLEY PAINT MANUFACTURING
727 South 950 West • Woods Cross, Utah 84087

MATERIAL SAFETY DATA SHEET

009 WHITE PRIMER

PRODUCT NAME: 009 WHITE PRIMER **HMIS CODES: H F R P**
PRODUCT CODE: 009 WHITE PRIMER **2 3 1 Bop**

SECTION I - MANUFACTURER IDENTIFICATION

MANUFACTURER'S NAME: VALLEY PAINT MANUFACTURING
ADDRESS : 727 SOUTH 950 WEST
WOODS CROSS, UTAH 84087

EMERGENCY PHONE : 800-633-8253 **REVISION DATE : 11/04/11**
INFORMATION PHONE : 801-298-4581 **NAME OF PREPARER : RALPH GRIDER**

SECTION II - HAZARDOUS INGREDIENTS / SARA III INFORMATION

REPORTABLE COMPONENTS	CAS NUMBER	VAPOR PRESSURE mm Hg @ TEMP		WEIGHT PERCENT
* XYLENE	1330-20-7	2.4	68 DEG	40
OSHA VPEL 100 PPM TWA				
OSHA VPEL 150 PPM STEL				
ACGIH TLV 100 PPM TWA				
ACGIH TLV 150 PPM STEL				

* Indicates toxic chemical(s) subject to the reporting requirements of section 313 of Title III and of 40 CFR 372.

N = N.T.P. Carcinogen I = I.A.R.C. Carcinogen

SECTION III - PHYSICAL/CHEMICAL CHARACTERISTICS

BOILING RANGE: 279 DEG F **DENSITY (H2O=8.33): 10.41975 lb/gl**
VAPOR DENSITY: HEAVIER THAN AIR **EVAPORATION RATE: SLOWER THAN ETHER**
COATING V.O.C.: 4.17 lb/gl **500 g/l**
MATERIAL V.O.C.: 4.17 lb/gl **500 g/l**
SOLUBILITY IN WATER: Non Soluble
APPEARANCE AND ODOR: COMMON TO SOLVENT REDUCED PAINT

SECTION IV - FIRE AND EXPLOSION HAZARD DATA

FLASH POINT: 80 DEG F **METHOD USED: SETAFLASH**
FLAMMABLE LIMITS IN AIR BY VOLUME- LOWER: 1.0%(V) **UPPER: 6.6%(V)**

EXTINGUISHING MEDIA:
FOAM, ALCOHOL FOAM, CO2, DRY CHEMICAL, WATER FOG, OTHER

SPECIAL FIREFIGHTING PROCEDURES
Respiratory equipment should be worn to avoid inhalation of concentrated vapors. Water should not be used except as fog to keep nearby containers cool.

UNUSUAL FIRE AND EXPLOSION HAZARDS
Handle as flammable liquid. If material is classified as waterborne,non-flammable, non-combustible, then disregard. Vapors form an explosive mixture inair between the upper and lower explosive limits which can be ignited by many sources such as pilot lights, electrical motors and switches.

SECTION V - REACTIVITY DATA

STABILITY: STABLE
CONDITIONS TO AVOID
Excessive heat, poor ventilation, corrosive atmospheres, excessive aging.

INCOMPATIBILITY (MATERIALS TO AVOID)
Alkaline materials, strong acids and oxidizing materials.

HAZARDOUS DECOMPOSITION OR BYPRODUCTS
Carbon monoxide, carbon dioxide, oxides of nitrogen, and possibly acrolein.

HAZARDOUS POLYMERIZATION: WILL OCCUR

SECTION VI - HEALTH HAZARD DATA

INHALATION HEALTH RISKS AND SYMPTOMS OF EXPOSURE
Inhalation: Dizziness, breathing difficulty, headaches & loss of coordination.

SKIN AND EYE CONTACT HEALTH RISKS AND SYMPTOMS OF EXPOSURE
Eye contact: Severe irritation, tearing, redness and blurred vision.

SKIN ABSORPTION HEALTH RISKS AND SYMPTOMS OF EXPOSURE
Skin contact: Can dry and defat skin causing cracks, irritation, and dermatitis.

INGESTION HEALTH RISKS AND SYMPTOMS OF EXPOSURE
Ingestion: Can cause gastrointestinal irritation, vomiting, nausea, and diarrhea.

HEALTH HAZARDS (ACUTE AND CHRONIC)
Inhalation-Dizziness, breathing difficulty, headaches, & loss of coordination. Eye contact-Severe irritation, tearing, redness, and blurred vision. Skin contact-Can dry and defat skin causing cracks, irritation, and dermatitis. Ingestion-Can cause gastrointestinal irritation, vomiting, nausea, & diarrhea. No chronic health effects.

CARCINOGENICITY: NTP CARCINOGEN: No IARC MONOGRAPHS: No OSHA REGULATED: No

INFORMATION NOT AVAILABLE.

MEDICAL CONDITIONS GENERALLY AGGRAVATED BY EXPOSURE
Anesthesia, respiratory tract irritation, dermatitis, nausea, vomiting.

EMERGENCY AND FIRST AID PROCEDURES
Inhalation overexposure-Move person to fresh air. If breathing stops, apply artificial respiration and seek immediate medical attention. Eye contact-flush with large quantities of water for 15 minutes. Skin contact-Wash thoroughly with soap and water and see a doctor. Ingestion-Do not induce vomiting, can cause chemical pneumonitis and pulmonary edema. Contact physician immediately.

SECTION VII - PRECAUTIONS FOR SAFE HANDLING AND USE

STEPS TO BE TAKEN IN CASE MATERIAL IS RELEASED OR SPILLED
Eliminate ignition sources, provide good ventilation, dike spill area and add absorbent earth or sawdust to spilled liquid. Thoroughly wet with water and mix.

WASTE DISPOSAL METHOD
Collect absorbent/water/spilled liquid mixture into metal containers and add enough water to cover. Consult local,state & federal hazardous waste regulations before disposing into approved hazardous waste landfills. Obey relevant laws.

PRECAUTIONS TO BE TAKEN IN HANDLING AND STORING
Use non-sparking utensils when handling this material. Avoid hot metal surface. Use in cool, well-ventilated areas. Keep containers closed when not in use. Keep away from excessive heat and open flames.

OTHER PRECAUTIONS
Smoking in area where this material is used should be strictly prohibited. Tools used with this material should be made from aluminum, brass or copper. Plastic utensils should not be used. NOTE: This information is accurate to the best knowledge of this company, but is furnished without any expressed or implied warranties.

SECTION VIII - CONTROL MEASURES

RESPIRATORY PROTECTION
When spraying this material use a NIOSH approved cartridge respirator or gas mask suitable to keep airborne mists and vapor concentrations below the time weighted threshold limit values. When using in poorly ventilated and confined spaces, use a fresh-air supplying respirator or a self-contained breathing apparatus.

VENTILATION
General mechanical ventilation or local exhaust should be suitable to keep vapor concentrations below TLV. Ventilation equip. must be explosion proof.

PROTECTIVE GLOVES
Impermeable chemical handling gloves for skin protection.

EYE PROTECTION
Use chemical safety glasses, goggles, and faceshields for eye protection.

OTHER PROTECTIVE CLOTHING OR EQUIPMENT
Use impermeable aprons and protective clothing whenever possible to prevent skin contact. The use of head caps whenever possible is strongly recommended.

WORK/HYGIENIC PRACTICES
Eye washes and safety showers in the workplace are recommended.

SECTION IX - SHIPPING DATA

D.O.T. PROPER SHIPPING NAME.....PAINT, FLAMMABLE LIQUID
D.O.T. HAZARD CLASS.....FLAMMABLE LIQUID

D.O.T. LABELS REQUIRED.....FLAMMABLE LIQUID
D.O.T. PLACARDS REQUIRED.....YES FLAMMABLE
BILL OF LADING DESCRIPTION.....PAINT, FLAMMABLE LIQUID
UN/NA CODE.....UN1263

SECTION X - DISCLAIMER

To the best of our knowledge, the information contained herein is accurate, obtained from sources believed by this company to be accurate.

VALLEY PAINT MANUFACTURING
727 South 950 West • Woods Cross, Utah 84087

MATERIAL SAFETY DATA SHEET

2104 KM GLOSS WHITE SILICONE

PRODUCT NAME: 2104 KM GLOSS WHITE SILICONE **HMIS CODES: H F R P**
PRODUCT CODE: 2104 KM GLOSS WHITE SILICONE **2 3 1 Bop**

SECTION I - MANUFACTURER IDENTIFICATION

MANUFACTURER'S NAME: VALLEY PAINT MANUFACTURING
ADDRESS : 727 SOUTH 950 WEST
WOODS CROSS, UTAH 84087

EMERGENCY PHONE : 800-633-8253 **REVISION DATE : 02/21/12**
INFORMATION PHONE : 801-298-4581 **NAME OF PREPARER : RALPH GRIDER**

SECTION II - HAZARDOUS INGREDIENTS / SARA III INFORMATION

REPORTABLE COMPONENTS	CAS NUMBER	VAPOR PRESSURE mm Hg @ TEMP		WEIGHT PERCENT
MINERAL SPIRITS	8032-32-4	2.0	68 DEG	25
OSHA VPEL 100 PPM TWA				
ACGIH TLV 100 PPM TWA				
* XYLENE	1330-20-7	2.4	68 DEG	3
OSHA VPEL 100 PPM TWA				
OSHA VPEL 150 PPM STEL				
ACGIH TLV 100 PPM TWA				
ACGIH TLV 150 PPM STEL				

* Indicates toxic chemical(s) subject to the reporting requirements of section 313 of Title III and of 40 CFR 372.

N = N.T.P. Carcinogen I = I.A.R.C. Carcinogen

SECTION III - PHYSICAL/CHEMICAL CHARACTERISTICS

BOILING RANGE: 279 DEG F - 300 DEG F **DENSITY (H2O=8.33): 9.20775 lb/gl**
VAPOR DENSITY: HEAVIER THAN AIR **EVAPORATION RATE: SLOWER THAN ETHER**
COATING V.O.C.: 3.69 lb/gl **443 g/l**
MATERIAL V.O.C.: 3.69 lb/gl **443 g/l**
SOLUBILITY IN WATER: Non Soluble
APPEARANCE AND ODOR: COMMON TO SOLVENT REDUCED PAINT

SECTION IV - FIRE AND EXPLOSION HAZARD DATA

FLASH POINT: 80 DEG F **METHOD USED: SETAFLASH**
FLAMMABLE LIMITS IN AIR BY VOLUME- LOWER: 1.0%(V) **UPPER: 6.6%(V)**

EXTINGUISHING MEDIA:
FOAM, ALCOHOL FOAM, CO2, DRY CHEMICAL, WATER FOG, OTHER

SPECIAL FIREFIGHTING PROCEDURES
Respiratory equipment should be worn to avoid inhalation of concentrated vapors. Water should not be used except as fog

to keep nearby containers cool.

UNUSUAL FIRE AND EXPLOSION HAZARDS
Handle as flammable liquid. If material is classified as waterborne,non-flammable, non-combustible, then disregard. Vapors form an explosive mixture inair between the upper and lower explosive limits which can be ignited by many sources such as pilot lights, electrical motors and switches.

SECTION V - REACTIVITY DATA

STABILITY: STABLE
CONDITIONS TO AVOID
Excessive heat, poor ventilation, corrosive atmospheres, excessive aging.

INCOMPATIBILITY (MATERIALS TO AVOID)
Alkaline materials, strong acids and oxidizing materials.

HAZARDOUS DECOMPOSITION OR BYPRODUCTS
Carbon monoxide, carbon dioxide, oxides of nitrogen, and possibly acrolein.

HAZARDOUS POLYMERIZATION: WILL OCCUR

SECTION VI - HEALTH HAZARD DATA

INHALATION HEALTH RISKS AND SYMPTOMS OF EXPOSURE
Inhalation: Dizziness, breathing difficulty, headaches & loss of coordination.

SKIN AND EYE CONTACT HEALTH RISKS AND SYMPTOMS OF EXPOSURE
Eye contact: Severe irritation, tearing, redness and blurred vision.

SKIN ABSORPTION HEALTH RISKS AND SYMPTOMS OF EXPOSURE
Skin contact: Can dry and defat skin causing cracks, irritation, and dermatitis.

INGESTION HEALTH RISKS AND SYMPTOMS OF EXPOSURE
Ingestion: Can cause gastrointestinal irritation, vomiting, nausea, and diarrhea.

HEALTH HAZARDS (ACUTE AND CHRONIC)
Inhalation-Dizziness, breathing difficulty, headaches, & loss of coordination. Eye contact-Severe irritation, tearing, redness, and blurred vision. Skin contact-Can dry and defat skin causing cracks, irritation, and dermatitis. Ingestion-Can cause gastrointestinal irritation, vomiting, nausea, & diarrhea. No chronic health effects.

CARCINOGENICITY: NTP CARCINOGEN: No IARC MONOGRAPHS: No OSHA REGULATED: No

INFORMATION NOT AVAILABLE.

MEDICAL CONDITIONS GENERALLY AGGRAVATED BY EXPOSURE
Anesthesia, respiratory tract irritation, dermatitis, nausea, vomiting.

EMERGENCY AND FIRST AID PROCEDURES
Inhalation overexposure-Move person to fresh air. If breathing stops, apply artificial respiration and seek immediate medical attention. Eye contact-flush with large quantities of water for 15 minutes. Skin contact-Wash thoroughly with soap and water and see a doctor. Ingestion-Do not induce vomiting, can cause chemical pneumonitis and pulmonary edema.

Contact physician immediately.

SECTION VII - PRECAUTIONS FOR SAFE HANDLING AND USE

STEPS TO BE TAKEN IN CASE MATERIAL IS RELEASED OR SPILLED
Eliminate ignition sources, provide good ventilation, dike spill area and add absorbent earth or sawdust to spilled liquid. Thoroughly wet with water and mix.

WASTE DISPOSAL METHOD
Collect absorbent/water/spilled liquid mixture into metal containers and add enough water to cover. Consult local,state & federal hazardous waste regulations before disposing into approved hazardous waste landfills. Obey relevant laws.

PRECAUTIONS TO BE TAKEN IN HANDLING AND STORING
Use non-sparking utensils when handling this material. Avoid hot metal surface. Use in cool, well-ventilated areas. Keep containers closed when not in use. Keep away from excessive heat and open flames.

OTHER PRECAUTIONS
Smoking in area where this material is used should be strictly prohibited. Tools used with this material should be made from aluminum, brass or copper. Plastic utensils should not be used. NOTE: This information is accurate to the best knowledge of this company, but is furnished without any expressed or implied warranties.

SECTION VIII - CONTROL MEASURES

RESPIRATORY PROTECTION
When spraying this material use a NIOSH approved cartridge respirator or gas mask suitable to keep airborne mists and vapor concentrations below the time weighted threshold limit values. When using in poorly ventilated and confined spaces, use a fresh-air supplying respirator or a self-contained breathing apparatus.

VENTILATION
General mechanical ventilation or local exhaust should be suitable to keep vapor concentrations below TLV. Ventilation equip. must be explosion proof.

PROTECTIVE GLOVES
Impermeable chemical handling gloves for skin protection.

EYE PROTECTION
Use chemical safety glasses, goggles, and faceshields for eye protection.

OTHER PROTECTIVE CLOTHING OR EQUIPMENT
Use impermeable aprons and protective clothing whenever possible to prevent skin contact. The use of head caps whenever possible is strongly recommended.

WORK/HYGIENIC PRACTICES
Eye washes and safety showers in the workplace are recommended.

SECTION IX - SHIPPING DATA

D.O.T. PROPER SHIPPING NAME.....PAINT, FLAMMABLE LIQUID
D.O.T. HAZARD CLASS.....FLAMMABLE LIQUID
D.O.T. LABELS REQUIRED.....FLAMMABLE LIQUID
D.O.T. PLACARDS REQUIRED.....YES FLAMMABLE
BILL OF LADING DESCRIPTION.....PAINT, FLAMMABLE LIQUID
UN/NA CODE.....UN1263

SECTION X - DISCLAIMER

To the best of our knowledge, the information contained herein is accurate, obtained from sources believed by this company to be accurate.

VALLEY PAINT MANUFACTURING
727 South 950 West • Woods Cross, Utah 84087

MATERIAL SAFETY DATA SHEET

097 ENAMEL REDUCER MEDIUM

PRODUCT NAME: 097 ENAMEL REDUCER MEDIUM
PRODUCT CODE: 097 ENAMEL REDUCER MEDIUM

HMIS CODES: H F R P
2 3 1 Bop

SECTION I - MANUFACTURER IDENTIFICATION

MANUFACTURER'S NAME: VALLEY PAINT MANUFACTURING
ADDRESS : 727 SOUTH 950 WEST
WOODS CROSS, UTAH 84087

EMERGENCY PHONE : 800-633-8253
INFORMATION PHONE : 801-298-4581
REVISION DATE : 07/27/10
NAME OF PREPARER : RALPH GRIDER

SECTION II - HAZARDOUS INGREDIENTS / SARA III INFORMATION

REPORTABLE COMPONENTS	CAS NUMBER	VAPOR PRESSURE mm Hg @ TEMP		WEIGHT PERCENT
* TOLUENE	108-88-3	22	68 DEG	39
OSHA PEL 200 PPM TWA				
OSHA PEL 300 PPM CEILING				
OSHA VPEL 100 PPM TWA				
OSHA VPEL 150 PPM STEL				
ACGIH TLV 50 PPM TWA				
ACGIH TLV 150 PPM STEL				
VM&P NAPHTHA	64742-89-8	10.2	68 DEG	22.09
OSHA VPEL 300 PPM TWA				
OSHA VPEL 400 PPM STEL				
ACGIH TLV 300 PPM TWA				
ACETONE	67-64-1	30.8	77 DEG	9.68
OSHA PEL 250 PPM TWA				
OSHA VPEL 250 PPM TWA				
OSHA VPEL 750 PPM STEL				
ACGIH TLV 500 PPM TWA				
ACGIH TLV 750 PPM STEL				

* Indicates toxic chemical(s) subject to the reporting requirements of section 313 of Title III and of 40 CFR 372.

N = N.T.P. Carcinogen I = I.A.R.C. Carcinogen

SECTION III - PHYSICAL/CHEMICAL CHARACTERISTICS

BOILING RANGE: 133 DEG F - 240 DEG F
DENSITY (H2O=8.33): 6.91793 lb/gl
VAPOR DENSITY: HEAVIER THAN AIR
EVAPORATION RATE: SLOWER THAN ETHER
COATING V.O.C.: 6.92 lb/gl
829 g/l
MATERIAL V.O.C.: 6.92 lb/gl
829 g/l
SOLUBILITY IN WATER: Non Soluble
APPEARANCE AND ODOR: COMMON TO SOLVENT REDUCED PAINT

SECTION IV - FIRE AND EXPLOSION HAZARD DATA

FLASH POINT: -4 DEG F **METHOD USED: SETAFLASH**
FLAMMABLE LIMITS IN AIR BY VOLUME- LOWER: 0.9%(V) **UPPER: 12.8%(V)**

EXTINGUISHING MEDIA:
FOAM, ALCOHOL FOAM, CO2, DRY CHEMICAL, WATER FOG, OTHER

SPECIAL FIREFIGHTING PROCEDURES
Respiratory equipment should be worn to avoid inhalation of concentrated vapors. Water should not be used except as fog to keep nearby containers cool.

UNUSUAL FIRE AND EXPLOSION HAZARDS
Handle as flammable liquid. If material is classified as waterborne,non-flammable, non-combustible, then disregard. Vapors form an explosive mixture inair between the upper and lower explosive limits which can be ignited by many sources such as pilot lights, electrical motors and switches.

SECTION V - REACTIVITY DATA

STABILITY: STABLE
CONDITIONS TO AVOID
Excessive heat, poor ventilation, corrosive atmospheres, excessive aging.

INCOMPATIBILITY (MATERIALS TO AVOID)
Alkaline materials, strong acids and oxidizing materials.

HAZARDOUS DECOMPOSITION OR BYPRODUCTS
Carbon monoxide, carbon dioxide, oxides of nitrogen, and possibly acrolein.

HAZARDOUS POLYMERIZATION: WILL OCCUR

SECTION VI - HEALTH HAZARD DATA

INHALATION HEALTH RISKS AND SYMPTOMS OF EXPOSURE
Inhalation: Dizziness, breathing difficulty, headaches & loss of coordination.

SKIN AND EYE CONTACT HEALTH RISKS AND SYMPTOMS OF EXPOSURE
Eye contact: Severe irritation, tearing, redness and blurred vision.

SKIN ABSORPTION HEALTH RISKS AND SYMPTOMS OF EXPOSURE
Skin contact: Can dry and defat skin causing cracks, irritation, and dermatitis.

INGESTION HEALTH RISKS AND SYMPTOMS OF EXPOSURE
Ingestion: Can cause gastrointestinal irritation, vomiting, nausea, and diarrhea.

HEALTH HAZARDS (ACUTE AND CHRONIC)
Inhalation-Dizziness, breathing difficulty, headaches, & loss of coordination. Eye contact-Severe irritation, tearing, redness, and blurred vision. Skin contact-Can dry and defat skin causing cracks, irritation, and dermatitis. Ingestion-Can cause gastrointestinal irritation, vomiting, nausea, & diarrhea. No chronic health effects.

CARCINOGENICITY: NTP CARCINOGEN: No **IARC MONOGRAPHS: No** **OSHA REGULATED:** No

INFORMATION NOT AVAILABLE.

MEDICAL CONDITIONS GENERALLY AGGRAVATED BY EXPOSURE
Anesthesia, respiratory tract irritation, dermatitis, nausea, vomiting.

EMERGENCY AND FIRST AID PROCEDURES
Inhalation overexposure-Move person to fresh air. If breathing stops, apply artificial respiration and seek immediate medical attention. Eye contact-flush with large quantities of water for 15 minutes. Skin contact-Wash thoroughly with soap and water and see a doctor. Ingestion-Do not induce vomiting, can cause chemical pneumonitis and pulmonary edema. Contact physician immediately.

SECTION VII - PRECAUTIONS FOR SAFE HANDLING AND USE

STEPS TO BE TAKEN IN CASE MATERIAL IS RELEASED OR SPILLED
Eliminate ignition sources, provide good ventilation, dike spill area and add absorbent earth or sawdust to spilled liquid. Thoroughly wet with water and mix.

WASTE DISPOSAL METHOD
Collect absorbent/water/spilled liquid mixture into metal containers and add enough water to cover. Consult local,state & federal hazardous waste regulations before disposing into approved hazardous waste landfills. Obey relevant laws.

PRECAUTIONS TO BE TAKEN IN HANDLING AND STORING
Use non-sparking utensils when handling this material. Avoid hot metal surface. Use in cool, well-ventilated areas. Keep containers closed when not in use. Keep away from excessive heat and open flames.

OTHER PRECAUTIONS
Smoking in area where this material is used should be strictly prohibited. Tools used with this material should be made from aluminum, brass or copper. Plastic utensils should not be used. NOTE: This information is accurate to the best knowledge of this company, but is furnished without any expressed or implied warranties.

SECTION VIII - CONTROL MEASURES

RESPIRATORY PROTECTION
When spraying this material use a NIOSH approved cartridge respirator or gas mask suitable to keep airborne mists and vapor concentrations below the time weighted threshold limit values. When using in poorly ventilated and confined spaces, use a fresh-air supplying respirator or a self-contained breathing apparatus.

VENTILATION
General mechanical ventilation or local exhaust should be suitable to keep vapor concentrations below TLV. Ventilation equip. must be explosion proof.

PROTECTIVE GLOVES
Impermeable chemical handling gloves for skin protection.

EYE PROTECTION
Use chemical safety glasses, goggles, and faceshields for eye protection.

OTHER PROTECTIVE CLOTHING OR EQUIPMENT
Use impermeable aprons and protective clothing whenever possible to prevent skin contact. The use of head caps whenever possible is strongly recommended.

WORK/HYGIENIC PRACTICES
Eye washes and safety showers in the workplace are recommended.

SECTION IX - SHIPPING DATA

D.O.T. PROPER SHIPPING NAME.....PAINT, FLAMMABLE LIQUID
D.O.T. HAZARD CLASS.....FLAMMABLE LIQUID
D.O.T. LABELS REQUIRED.....FLAMMABLE LIQUID
D.O.T. PLACARDS REQUIRED.....YES FLAMMABLE
BILL OF LADING DESCRIPTION.....PAINT, FLAMMABLE LIQUID
UN/NA CODE.....UN1263

SECTION X - DISCLAIMER

To the best of our knowledge, the information contained herein is accurate, obtained from sources believed by this company to be accurate.

VALLEY PAINT MANUFACTURING
727 South 950 West • Woods Cross, Utah 84087

MATERIAL SAFETY DATA SHEET

2153 WHITE INTERMEDIATE COAT

PRODUCT NAME: 2153 WHITE INTERMEDIATE COAT **HMIS CODES: H F R P**
PRODUCT CODE: 2153 WHITE PHENOLIC INTERMEDIA **2 3 1 Bop**

SECTION I - MANUFACTURER IDENTIFICATION

MANUFACTURER'S NAME: VALLEY PAINT MANUFACTURING
ADDRESS : 727 SOUTH 950 WEST
WOODS CROSS, UTAH 84087

EMERGENCY PHONE : 800-633-8253 **REVISION DATE : 11/04/11**
INFORMATION PHONE : 801-298-4581 **NAME OF PREPARER : RALPH GRIDER**

SECTION II - HAZARDOUS INGREDIENTS / SARA III INFORMATION

REPORTABLE COMPONENTS	CAS NUMBER	VAPOR PRESSURE mm Hg @ TEMP		WEIGHT PERCENT
* XYLENE	1330-20-7	2.4	68 DEG	41
OSHA VPEL 100 PPM TWA				
OSHA VPEL 150 PPM STEL				
ACGIH TLV 100 PPM TWA				
ACGIH TLV 150 PPM STEL				

* Indicates toxic chemical(s) subject to the reporting requirements of section 313 of Title III and of 40 CFR 372.

N = N.T.P. Carcinogen I = I.A.R.C. Carcinogen

SECTION III - PHYSICAL/CHEMICAL CHARACTERISTICS

BOILING RANGE: 279 DEG F **DENSITY (H2O=8.33): 10.51597 lb/gl**
VAPOR DENSITY: HEAVIER THAN AIR **EVAPORATION RATE: SLOWER THAN ETHER**
COATING V.O.C.: 4.3 lb/gl **515 g/l**
MATERIAL V.O.C.: 4.3 lb/gl **515 g/l**
SOLUBILITY IN WATER: Non Soluble
APPEARANCE AND ODOR: COMMON TO SOLVENT REDUCED PAINT

SECTION IV - FIRE AND EXPLOSION HAZARD DATA

FLASH POINT: 80 DEG F **METHOD USED: SETAFLASH**
FLAMMABLE LIMITS IN AIR BY VOLUME- LOWER: 1.0%(V) **UPPER: 6.6%(V)**

EXTINGUISHING MEDIA:
FOAM, ALCOHOL FOAM, CO2, DRY CHEMICAL, WATER FOG, OTHER

SPECIAL FIREFIGHTING PROCEDURES
Respiratory equipment should be worn to avoid inhalation of concentrated vapors. Water should not be used except as fog to keep nearby containers cool.

UNUSUAL FIRE AND EXPLOSION HAZARDS
Handle as flammable liquid. If material is classified as waterborne,non-flammable, non-combustible, then disregard. Vapors form an explosive mixture inair between the upper and lower explosive limits which can be ignited by many sources such as pilot lights, electrical motors and switches.

SECTION V - REACTIVITY DATA

STABILITY: STABLE
CONDITIONS TO AVOID
Excessive heat, poor ventilation, corrosive atmospheres, excessive aging.

INCOMPATIBILITY (MATERIALS TO AVOID)
Alkaline materials, strong acids and oxidizing materials.

HAZARDOUS DECOMPOSITION OR BYPRODUCTS
Carbon monoxide, carbon dioxide, oxides of nitrogen, and possibly acrolein.

HAZARDOUS POLYMERIZATION: WILL OCCUR

SECTION VI - HEALTH HAZARD DATA

INHALATION HEALTH RISKS AND SYMPTOMS OF EXPOSURE
Inhalation: Dizziness, breathing difficulty, headaches & loss of coordination.

SKIN AND EYE CONTACT HEALTH RISKS AND SYMPTOMS OF EXPOSURE
Eye contact: Severe irritation, tearing, redness and blurred vision.

SKIN ABSORPTION HEALTH RISKS AND SYMPTOMS OF EXPOSURE
Skin contact: Can dry and defat skin causing cracks, irritation, and dermatitis.

INGESTION HEALTH RISKS AND SYMPTOMS OF EXPOSURE
Ingestion: Can cause gastrointestinal irritation, vomiting, nausea, and diarrhea.

HEALTH HAZARDS (ACUTE AND CHRONIC)
Inhalation-Dizziness, breathing difficulty, headaches, & loss of coordination. Eye contact-Severe irritation, tearing, redness, and blurred vision. Skin contact-Can dry and defat skin causing cracks, irritation, and dermatitis. Ingestion-Can cause gastrointestinal irritation, vomiting, nausea, & diarrhea. No chronic health effects.

CARCINOGENICITY: NTP CARCINOGEN: No IARC MONOGRAPHS: No OSHA REGULATED: No

INFORMATION NOT AVAILABLE.

MEDICAL CONDITIONS GENERALLY AGGRAVATED BY EXPOSURE
Anesthesia, respiratory tract irritation, dermatitis, nausea, vomiting.

EMERGENCY AND FIRST AID PROCEDURES
Inhalation overexposure-Move person to fresh air. If breathing stops, apply artificial respiration and seek immediate medical attention. Eye contact-flush with large quantities of water for 15 minutes. Skin contact-Wash thoroughly with soap and water and see a doctor. Ingestion-Do not induce vomiting, can cause chemical pneumonitis and pulmonary edema. Contact physician immediately.

SECTION VII - PRECAUTIONS FOR SAFE HANDLING AND USE

STEPS TO BE TAKEN IN CASE MATERIAL IS RELEASED OR SPILLED
Eliminate ignition sources, provide good ventilation, dike spill area and add absorbent earth or sawdust to spilled liquid. Thoroughly wet with water and mix.

WASTE DISPOSAL METHOD
Collect absorbent/water/spilled liquid mixture into metal containers and add enough water to cover. Consult local,state & federal hazardous waste regulations before disposing into approved hazardous waste landfills. Obey relevant laws.

PRECAUTIONS TO BE TAKEN IN HANDLING AND STORING
Use non-sparking utensils when handling this material. Avoid hot metal surface. Use in cool, well-ventilated areas. Keep containers closed when not in use. Keep away from excessive heat and open flames.

OTHER PRECAUTIONS
Smoking in area where this material is used should be strictly prohibited. Tools used with this material should be made from aluminum, brass or copper. Plastic utensils should not be used. NOTE: This information is accurate to the best knowledge of this company, but is furnished without any expressed or implied warranties.

SECTION VIII - CONTROL MEASURES

RESPIRATORY PROTECTION
When spraying this material use a NIOSH approved cartridge respirator or gas mask suitable to keep airborne mists and vapor concentrations below the time weighted threshold limit values. When using in poorly ventilated and confined spaces, use a fresh-air supplying respirator or a self-contained breathing apparatus.

VENTILATION
General mechanical ventilation or local exhaust should be suitable to keep vapor concentrations below TLV. Ventilation equip. must be explosion proof.

PROTECTIVE GLOVES
Impermeable chemical handling gloves for skin protection.

EYE PROTECTION
Use chemical safety glasses, goggles, and faceshields for eye protection.

OTHER PROTECTIVE CLOTHING OR EQUIPMENT
Use impermeable aprons and protective clothing whenever possible to prevent skin contact. The use of head caps whenever possible is strongly recommended.

WORK/HYGIENIC PRACTICES
Eye washes and safety showers in the workplace are recommended.

SECTION IX - SHIPPING DATA

D.O.T. PROPER SHIPPING NAME.....PAINT, FLAMMABLE LIQUID
D.O.T. HAZARD CLASS.....FLAMMABLE LIQUID

D.O.T. LABELS REQUIRED.....FLAMMABLE LIQUID
D.O.T. PLACARDS REQUIRED.....YES FLAMMABLE
BILL OF LADING DESCRIPTION.....PAINT, FLAMMABLE LIQUID
UN/NA CODE.....UN1263

SECTION X - DISCLAIMER

To the best of our knowledge, the information contained herein is accurate, obtained from sources believed by this company to be accurate.

VALLEY PAINT MANUFACTURING
727 South 950 West • Woods Cross, Utah 84087

MATERIAL SAFETY DATA SHEET

2513 KM BLACK SIL ALKYD

PRODUCT NAME: 2513 KM BLACK SIL ALKYD **HMIS CODES: H F R P**
PRODUCT CODE: 2513 KM BLACK SIL ALKYD **2 3 1 Bop**

SECTION I - MANUFACTURER IDENTIFICATION

MANUFACTURER'S NAME: VALLEY PAINT MANUFACTURING
ADDRESS : 727 SOUTH 950 WEST
WOODS CROSS, UTAH 84087

EMERGENCY PHONE : 800-633-8253 **REVISION DATE : 02/21/12**
INFORMATION PHONE : 801-298-4581 **NAME OF PREPARER : RALPH GRIDER**

SECTION II - HAZARDOUS INGREDIENTS / SARA III INFORMATION

REPORTABLE COMPONENTS	CAS NUMBER	VAPOR PRESSURE mm Hg @ TEMP		WEIGHT PERCENT
MINERAL SPIRITS	8032-32-4	2.0	68 DEG	28
OSHA VPEL 100 PPM TWA				
ACGIH TLV 100 PPM TWA				
* XYLENE	1330-20-7	2.4	68 DEG	6
OSHA VPEL 100 PPM TWA				
OSHA VPEL 150 PPM STEL				
ACGIH TLV 100 PPM TWA				
ACGIH TLV 150 PPM STEL				

* Indicates toxic chemical(s) subject to the reporting requirements of section 313 of Title III and of 40 CFR 372.

N = N.T.P. Carcinogen I = I.A.R.C. Carcinogen

SECTION III - PHYSICAL/CHEMICAL CHARACTERISTICS

BOILING RANGE: 279 DEG F - 300 DEG F **DENSITY (H2O=8.33): 7.68899 lb/gl**
VAPOR DENSITY: HEAVIER THAN AIR **EVAPORATION RATE: SLOWER THAN ETHER**
COATING V.O.C.: 3.78 lb/gl **453 g/l**
MATERIAL V.O.C.: 3.78 lb/gl **453 g/l**
SOLUBILITY IN WATER: Non Soluble
APPEARANCE AND ODOR: COMMON TO SOLVENT REDUCED PAINT

SECTION IV - FIRE AND EXPLOSION HAZARD DATA

FLASH POINT: 80 DEG F **METHOD USED: SETAFLASH**
FLAMMABLE LIMITS IN AIR BY VOLUME- LOWER: 1.0%(V) **UPPER: 6.6%(V)**

EXTINGUISHING MEDIA:
FOAM, ALCOHOL FOAM, CO2, DRY CHEMICAL, WATER FOG, OTHER

SPECIAL FIREFIGHTING PROCEDURES
Respiratory equipment should be worn to avoid inhalation of concentrated vapors. Water should not be used except as fog

to keep nearby containers cool.

UNUSUAL FIRE AND EXPLOSION HAZARDS
Handle as flammable liquid. If material is classified as waterborne,non-flammable, non-combustible, then disregard. Vapors form an explosive mixture inair between the upper and lower explosive limits which can be ignited by many sources such as pilot lights, electrical motors and switches.

SECTION V - REACTIVITY DATA

STABILITY: STABLE
CONDITIONS TO AVOID
Excessive heat, poor ventilation, corrosive atmospheres, excessive aging.

INCOMPATIBILITY (MATERIALS TO AVOID)
Alkaline materials, strong acids and oxidizing materials.

HAZARDOUS DECOMPOSITION OR BYPRODUCTS
Carbon monoxide, carbon dioxide, oxides of nitrogen, and possibly acrolein.

HAZARDOUS POLYMERIZATION: WILL OCCUR

SECTION VI - HEALTH HAZARD DATA

INHALATION HEALTH RISKS AND SYMPTOMS OF EXPOSURE
Inhalation: Dizziness, breathing difficulty, headaches & loss of coordination.

SKIN AND EYE CONTACT HEALTH RISKS AND SYMPTOMS OF EXPOSURE
Eye contact: Severe irritation, tearing, redness and blurred vision.

SKIN ABSORPTION HEALTH RISKS AND SYMPTOMS OF EXPOSURE
Skin contact: Can dry and defat skin causing cracks, irritation, and dermatitis.

INGESTION HEALTH RISKS AND SYMPTOMS OF EXPOSURE
Ingestion: Can cause gastrointestinal irritation, vomiting, nausea, and diarrhea.

HEALTH HAZARDS (ACUTE AND CHRONIC)
Inhalation-Dizziness, breathing difficulty, headaches, & loss of coordination. Eye contact-Severe irritation, tearing, redness, and blurred vision. Skin contact-Can dry and defat skin causing cracks, irritation, and dermatitis. Ingestion-Can cause gastrointestinal irritation, vomiting, nausea, & diarrhea. No chronic health effects.

CARCINOGENICITY: NTP CARCINOGEN: No IARC MONOGRAPHS: No OSHA REGULATED: No

INFORMATION NOT AVAILABLE.

MEDICAL CONDITIONS GENERALLY AGGRAVATED BY EXPOSURE
Anesthesia, respiratory tract irritation, dermatitis, nausea, vomiting.

EMERGENCY AND FIRST AID PROCEDURES
Inhalation overexposure-Move person to fresh air. If breathing stops, apply artificial respiration and seek immediate medical attention. Eye contact-flush with large quantities of water for 15 minutes. Skin contact-Wash thoroughly with soap and water and see a doctor. Ingestion-Do not induce vomiting, can cause chemical pneumonitis and pulmonary edema.

Contact physician immediately.

SECTION VII - PRECAUTIONS FOR SAFE HANDLING AND USE

STEPS TO BE TAKEN IN CASE MATERIAL IS RELEASED OR SPILLED
Eliminate ignition sources, provide good ventilation, dike spill area and add absorbent earth or sawdust to spilled liquid. Thoroughly wet with water and mix.

WASTE DISPOSAL METHOD
Collect absorbent/water/spilled liquid mixture into metal containers and add enough water to cover. Consult local,state & federal hazardous waste regulations before disposing into approved hazardous waste landfills. Obey relevant laws.

PRECAUTIONS TO BE TAKEN IN HANDLING AND STORING
Use non-sparking utensils when handling this material. Avoid hot metal surface. Use in cool, well-ventilated areas. Keep containers closed when not in use. Keep away from excessive heat and open flames.

OTHER PRECAUTIONS
Smoking in area where this material is used should be strictly prohibited. Tools used with this material should be made from aluminum, brass or copper. Plastic utensils should not be used. NOTE: This information is accurate to the best knowledge of this company, but is furnished without any expressed or implied warranties.

SECTION VIII - CONTROL MEASURES

RESPIRATORY PROTECTION
When spraying this material use a NIOSH approved cartridge respirator or gas mask suitable to keep airborne mists and vapor concentrations below the time weighted threshold limit values. When using in poorly ventilated and confined spaces, use a fresh-air supplying respirator or a self-contained breathing apparatus.

VENTILATION
General mechanical ventilation or local exhaust should be suitable to keep vapor concentrations below TLV. Ventilation equip. must be explosion proof.

PROTECTIVE GLOVES
Impermeable chemical handling gloves for skin protection.

EYE PROTECTION
Use chemical safety glasses, goggles, and faceshields for eye protection.

OTHER PROTECTIVE CLOTHING OR EQUIPMENT
Use impermeable aprons and protective clothing whenever possible to prevent skin contact. The use of head caps whenever possible is strongly recommended.

WORK/HYGIENIC PRACTICES
Eye washes and safety showers in the workplace are recommended.

SECTION IX - SHIPPING DATA

D.O.T. PROPER SHIPPING NAME.....PAINT, FLAMMABLE LIQUID
D.O.T. HAZARD CLASS.....FLAMMABLE LIQUID
D.O.T. LABELS REQUIRED.....FLAMMABLE LIQUID
D.O.T. PLACARDS REQUIRED.....YES FLAMMABLE
BILL OF LADING DESCRIPTION.....PAINT, FLAMMABLE LIQUID
UN/NA CODE.....UN1263

SECTION X - DISCLAIMER

To the best of our knowledge, the information contained herein is accurate, obtained from sources believed by this company to be accurate.

VALLEY PAINT MANUFACTURING
727 South 950 West • Woods Cross, Utah 84087

MATERIAL SAFETY DATA SHEET

2516 BLACK PHENOLIC PRIMER

PRODUCT NAME: 2516 BLACK PHENOLIC PRIMER **HMIS CODES: H F R P**
PRODUCT CODE: 2516 BLACK PHENOLIC PRIMER **2 3 1 Bop**

SECTION I - MANUFACTURER IDENTIFICATION

MANUFACTURER'S NAME: VALLEY PAINT MANUFACTURING
ADDRESS : 727 SOUTH 950 WEST
WOODS CROSS, UTAH 84087

EMERGENCY PHONE : 800-633-8253 **REVISION DATE : 11/04/11**
INFORMATION PHONE : 801-298-4581 **NAME OF PREPARER : RALPH GRIDER**

SECTION II - HAZARDOUS INGREDIENTS / SARA III INFORMATION

REPORTABLE COMPONENTS	CAS NUMBER	VAPOR PRESSURE mm Hg @ TEMP		WEIGHT PERCENT
* XYLENE	1330-20-7	2.4	68 DEG	42
OSHA VPEL 100 PPM TWA				
OSHA VPEL 150 PPM STEL				
ACGIH TLV 100 PPM TWA				
ACGIH TLV 150 PPM STEL				

* Indicates toxic chemical(s) subject to the reporting requirements of section 313 of Title III and of 40 CFR 372.

N = N.T.P. Carcinogen I = I.A.R.C. Carcinogen

SECTION III - PHYSICAL/CHEMICAL CHARACTERISTICS

BOILING RANGE: 279 DEG F **DENSITY (H2O=8.33): 9.95331 lb/gl**
VAPOR DENSITY: HEAVIER THAN AIR **EVAPORATION RATE: SLOWER THAN ETHER**
COATING V.O.C.: 4.18 lb/gl **500 g/l**
MATERIAL V.O.C.: 4.18 lb/gl **500 g/l**
SOLUBILITY IN WATER: Non Soluble
APPEARANCE AND ODOR: COMMON TO SOLVENT REDUCED PAINT

SECTION IV - FIRE AND EXPLOSION HAZARD DATA

FLASH POINT: 80 DEG F **METHOD USED: SETAFLASH**
FLAMMABLE LIMITS IN AIR BY VOLUME- LOWER: 1.0%(V) **UPPER: 6.6%(V)**

EXTINGUISHING MEDIA:
FOAM, ALCOHOL FOAM, CO2, DRY CHEMICAL, WATER FOG, OTHER

SPECIAL FIREFIGHTING PROCEDURES
Respiratory equipment should be worn to avoid inhalation of concentrated vapors. Water should not be used except as fog to keep nearby containers cool.

UNUSUAL FIRE AND EXPLOSION HAZARDS
Handle as flammable liquid. If material is classified as waterborne,non-flammable, non-combustible, then disregard. Vapors form an explosive mixture inair between the upper and lower explosive limits which can be ignited by many sources such as pilot lights, electrical motors and switches.

SECTION V - REACTIVITY DATA

STABILITY: STABLE
CONDITIONS TO AVOID
Excessive heat, poor ventilation, corrosive atmospheres, excessive aging.

INCOMPATIBILITY (MATERIALS TO AVOID)
Alkaline materials, strong acids and oxidizing materials.

HAZARDOUS DECOMPOSITION OR BYPRODUCTS
Carbon monoxide, carbon dioxide, oxides of nitrogen, and possibly acrolein.

HAZARDOUS POLYMERIZATION: WILL OCCUR

SECTION VI - HEALTH HAZARD DATA

INHALATION HEALTH RISKS AND SYMPTOMS OF EXPOSURE
Inhalation: Dizziness, breathing difficulty, headaches & loss of coordination.

SKIN AND EYE CONTACT HEALTH RISKS AND SYMPTOMS OF EXPOSURE
Eye contact: Severe irritation, tearing, redness and blurred vision.

SKIN ABSORPTION HEALTH RISKS AND SYMPTOMS OF EXPOSURE
Skin contact: Can dry and defat skin causing cracks, irritation, and dermatitis.

INGESTION HEALTH RISKS AND SYMPTOMS OF EXPOSURE
Ingestion: Can cause gastrointestinal irritation, vomiting, nausea, and diarrhea.

HEALTH HAZARDS (ACUTE AND CHRONIC)
Inhalation-Dizziness, breathing difficulty, headaches, & loss of coordination. Eye contact-Severe irritation, tearing, redness, and blurred vision. Skin contact-Can dry and defat skin causing cracks, irritation, and dermatitis. Ingestion-Can cause gastrointestinal irritation, vomiting, nausea, & diarrhea. No chronic health effects.

CARCINOGENICITY: NTP CARCINOGEN: No IARC MONOGRAPHS: No OSHA REGULATED: No

INFORMATION NOT AVAILABLE.

MEDICAL CONDITIONS GENERALLY AGGRAVATED BY EXPOSURE
Anesthesia, respiratory tract irritation, dermatitis, nausea, vomiting.

EMERGENCY AND FIRST AID PROCEDURES
Inhalation overexposure-Move person to fresh air. If breathing stops, apply artificial respiration and seek immediate medical attention. Eye contact-flush with large quantities of water for 15 minutes. Skin contact-Wash thoroughly with soap and water and see a doctor. Ingestion-Do not induce vomiting, can cause chemical pneumonitis and pulmonary edema. Contact physician immediately.

SECTION VII - PRECAUTIONS FOR SAFE HANDLING AND USE

STEPS TO BE TAKEN IN CASE MATERIAL IS RELEASED OR SPILLED
Eliminate ignition sources, provide good ventilation, dike spill area and add absorbent earth or sawdust to spilled liquid. Thoroughly wet with water and mix.

WASTE DISPOSAL METHOD
Collect absorbent/water/spilled liquid mixture into metal containers and add enough water to cover. Consult local,state & federal hazardous waste regulations before disposing into approved hazardous waste landfills. Obey relevant laws.

PRECAUTIONS TO BE TAKEN IN HANDLING AND STORING
Use non-sparking utensils when handling this material. Avoid hot metal surface. Use in cool, well-ventilated areas. Keep containers closed when not in use. Keep away from excessive heat and open flames.

OTHER PRECAUTIONS
Smoking in area where this material is used should be strictly prohibited. Tools used with this material should be made from aluminum, brass or copper. Plastic utensils should not be used. NOTE: This information is accurate to the best knowledge of this company, but is furnished without any expressed or implied warranties.

SECTION VIII - CONTROL MEASURES

RESPIRATORY PROTECTION
When spraying this material use a NIOSH approved cartridge respirator or gas mask suitable to keep airborne mists and vapor concentrations below the time weighted threshold limit values. When using in poorly ventilated and confined spaces, use a fresh-air supplying respirator or a self-contained breathing apparatus.

VENTILATION
General mechanical ventilation or local exhaust should be suitable to keep vapor concentrations below TLV. Ventilation equip. must be explosion proof.

PROTECTIVE GLOVES
Impermeable chemical handling gloves for skin protection.

EYE PROTECTION
Use chemical safety glasses, goggles, and faceshields for eye protection.

OTHER PROTECTIVE CLOTHING OR EQUIPMENT
Use impermeable aprons and protective clothing whenever possible to prevent skin contact. The use of head caps whenever possible is strongly recommended.

WORK/HYGIENIC PRACTICES
Eye washes and safety showers in the workplace are recommended.

SECTION IX - SHIPPING DATA

D.O.T. PROPER SHIPPING NAME.....PAINT, FLAMMABLE LIQUID
D.O.T. HAZARD CLASS.....FLAMMABLE LIQUID

D.O.T. LABELS REQUIRED.....FLAMMABLE LIQUID
D.O.T. PLACARDS REQUIRED.....YES FLAMMABLE
BILL OF LADING DESCRIPTION.....PAINT, FLAMMABLE LIQUID
UN/NA CODE.....UN1263

SECTION X - DISCLAIMER

To the best of our knowledge, the information contained herein is accurate, obtained from sources believed by this company to be accurate.

MATERIAL SAFETY DATA SHEET

603 N Monitor Road
Springdale, AR 72764
PH: (479) 756-5874

PRODUCT NAME: PHOSPHATIZER # 2
MSDS NO: 52000.06

FOR CHEMICAL EMERGENCY, SPILL, LEAK, FIRE, EXPOSURE CALL: CHEMTREC 1-800-424-9300 OUTSIDE US CALL 1-703-527-3887	FOR MEDICAL EMERGENCY CALL ROCKY MOUNTAIN POISON CENTER: 1-303-623-5716	HEALTH HAZARD: (0 None > 4 Extreme) Health =2 Flammability =0 Reactivity =0

SECTION 1 – PRODUCT IDENTIFICATION

DATE PREPARED: April 21, 2006 **SUPERSEDES: November 22, 2005**

PREPARED BY: Michael E. Elmore

D.O.T. SHIPPING CLASS: Class 55, Non-Hazardous Cleaning Compound.

SECTION 2 – HAZARDOUS INGREDIENTS

HAZARDOUS COMPONENTS	CAS. NO.	OSHA PEL	ACGIH TLV	ORAL LD50 RAT	Per-Cent
Ethylene Glycol Monobutyl Ether *	111-76-2	25 ppm SKIN	25 ppm SKIN	470 mg/kg	1-5%

*** subject to reporting requirements Section 313 of Title III of SARA and 40 CFR 372.**

SECTION 3 – PHYSICAL & CHEMICAL CHARACTERISTICS

BOILING POINT: > 212 °F **SOLUBILITY IN WATER: Soluble** **SPECIFIC GRAVITY: 1.08**

VAPOR PRESSURE mm/hg: 23 @ 70 °F **VAPOR DENSITY (Air=1): 1.2**

REACTIVITY IN WATER: Mild acid **pH 5% SOLUTION = 3.2**

MELTING POINT: 32 °F **APPEARANCE AND ODOR: Clear liquid, slight ethereal odor**

SECTION 4 – FIRE & EXPLOSION DATA

FLASH POINT: > 200 °F **FLAMMABILITY LIMITS IN AIR % BY VOLUME:**

METHOD USED: PMCC **LEL LOWER: NA** **UEL UPPER: NA**

AUTO-IGNITION TEMPERATURE: NA

EXTINGUISHER MEDIA: Non-flammable, water solution

SPECIAL FIRE FIGHTING PROCEDURES: None **UNUSUAL FIRE & EXPLOSION HAZARDS: None**

SECTION 5 – PHYSICAL HAZARDS (REACTIVITY DATA)

STABILITY: Stable

INCOMPATIBILITY (MATERIALS TO AVOID): Alkaline Chemicals

HAZARDOUS DECOMPOSITION PRODUCTS: NA **HAZARDOUS POLYMERIZATION: Will NOT occur**

CONDITIONS TO AVOID: NA

SECTION 6 – HEALTH HAZARDS

ACUTE: Eye irritation or burns

CHRONIC: None Known

SIGNS & SYMPTOMS OF EXPOSURE: Eye irritation

MEDICAL CONDITIONS GENERALLY AGGRAVATED BY EXPOSURE: NA

CARCINOGEN OR POTENTIAL CARCINOGENS: OSHA: None NTP: None IARC: None ACGIH: None

EMERGENCY FIRST AID:

EYES: Immediately flush with water for 15 minutes. GET MEDICAL ATTENTION IMMEDIATELY!

SKIN: Wash thoroughly with water. Get medical attention if irritation persists.

INHALATION: NA

INGESTION: Drink water, call a physician immediately.

ROUTES OF ENTRY:

INHALATION: NA

EYES: Will cause eye irritation

SKIN: May cause irritation

INGESTION: Stomach irritation

SECTION 7 – SPECIAL PRECAUTIONS & SPILL / LEAK PROCEDURES

HANDLING & STORAGE:	**Store in a cool dry area. DO NOT FREEZE. Keep closed when not in use.**
OTHER PRECAUTIONS:	**Normal good housekeeping practices.**
IN CASE OF SPILL:	**Shut off leak, if this can be done without injury. Flush area with water. Large spills should be diked with earth; then pump to a salvage tank.**
WASTE DISPOSAL:	**Dispose of in accordance with all Federal, State and Local pollution control regulations.**

SECTION 8 – SPECIAL PROTECTION INFORMATION

RESPIRATORY PROTECTION:	**NA**
VENTILATION:	**Use with adequate ventilation.**
PROTECTIVE GLOVES:	**Rubber**
EYE PROTECTION:	**Safety Glasses or Goggles**
OTHER:	**Waterproof suit and boots may be worn**
HYGIENIC PRACTICES:	**Wash thoroughly after handling.**

SECTION 9 – COMMUNITY RIGHT TO KNOW LIST

	CHEMICAL NAME:	C.A.S. NO.
1.	Water	7732-18-5
2.	Monosodium Phosphate	7558-80-7
3.	Ethylene Glycol Monobutyl Ether	111-76-2
4.	Sodium Xylene Sulfonate	1300-72-7

NA = Not Applicable NE = None Established

The information provided in this Material Safety Data Sheet has been compiled from our experience and data presented in various technical publications. It is the users responsibility to determine the suitability of this information for the adoption of safety precautions as may be necessary. We reserve the right to revise Material Safety Data Sheets from time to time as new technical information becomes available. The information herein is furnished without warranty of any kind.

VALLEY PAINT MANUFACTURING
727 South 950 West • Woods Cross, Utah 84087

MATERIAL SAFETY DATA SHEET

099 LACQUER THINNER

PRODUCT NAME: 099 LACQUER THINNER
PRODUCT CODE: 099 LACQUER THINNER

HMIS CODES: H F R P
2 3 1 Bop

SECTION I - MANUFACTURER IDENTIFICATION

MANUFACTURER'S NAME: VALLEY PAINT MANUFACTURING
ADDRESS : 727 SOUTH 950 WEST
WOODS CROSS, UTAH 84087

EMERGENCY PHONE : 800-633-8253
INFORMATION PHONE : 801-298-4581
REVISION DATE :
NAME OF PREPARER : RALPH GRIDER

SECTION II - HAZARDOUS INGREDIENTS / SARA III INFORMATION

REPORTABLE COMPONENTS	CAS NUMBER	VAPOR PRESSURE mm Hg @ TEMP		WEIGHT PERCENT
* XYLENE	1330-20-7	2.4	68 DEG	50
OSHA VPEL 100 PPM TWA				
OSHA VPEL 150 PPM STEL				
ACGIH TLV 100 PPM TWA				
ACGIH TLV 150 PPM STEL				
* METHYL ETHYL KETONE	78-93-3	30.2	68 DEG	18
OSHA VPEL 200 PPM TWA				
OSHA VPEL 300 PPM STEL				
ACGIH TLV 200 PPM TWA				
ACGIH TLV 300 PPM STEL				
METHYL ALCOHOL	67-56-1	97.68	68 DEG	12.27
OSHA VPEL 200 PPM TWA				
OSHA VPEL 250 PPM STEL				
ACGIH TLV 200 PPM TWA				
ACGIH TLV 250 PPM STEL				
* TOLUENE	108-88-3	22	68 DEG	10
OSHA PEL 200 PPM TWA				
OSHA PEL 300 PPM CEILING				
OSHA VPEL 100 PPM TWA				
OSHA VPEL 150 PPM STEL				
ACGIH TLV 50 PPM TWA				
ACGIH TLV 150 PPM STEL				
ACETONE	67-64-1	30.8	77 DEG	9.43
OSHA PEL 250 PPM TWA				
OSHA VPEL 250 PPM TWA				
OSHA VPEL 750 PPM STEL				
ACGIH TLV 500 PPM TWA				
ACGIH TLV 750 PPM STEL				

* Indicates toxic chemical(s) subject to the reporting requirements of section 313 of Title III and of 40 CFR 372.

N = N.T.P. Carcinogen I = I.A.R.C. Carcinogen

SECTION III - PHYSICAL/CHEMICAL CHARACTERISTICS

BOILING RANGE: 133 DEG F - 279 DEG F **DENSITY (H2O=8.33): 6.99705 lb/gl**
VAPOR DENSITY: HEAVIER THAN AIR **EVAPORATION RATE: SLOWER THAN ETHER**
COATING V.O.C.: 7.0 lb/gl **838 g/l**
MATERIAL V.O.C.: 7.0 lb/gl **838 g/l**
SOLUBILITY IN WATER: Non Soluble
APPEARANCE AND ODOR: COMMON TO SOLVENT REDUCED PAINT

SECTION IV - FIRE AND EXPLOSION HAZARD DATA

FLASH POINT: -4 DEG F **METHOD USED: SETAFLASH**
FLAMMABLE LIMITS IN AIR BY VOLUME- LOWER: 1.0%(V) **UPPER: 36.0%(V)**

EXTINGUISHING MEDIA:
FOAM, ALCOHOL FOAM, CO2, DRY CHEMICAL, WATER FOG, OTHER

SPECIAL FIREFIGHTING PROCEDURES
Respiratory equipment should be worn to avoid inhalation of concentrated vapors. Water should not be used except as fog to keep nearby containers cool.

UNUSUAL FIRE AND EXPLOSION HAZARDS
Handle as flammable liquid. If material is classified as waterborne,non-flammable, non-combustible, then disregard. Vapors form an explosive mixture inair between the upper and lower explosive limits which can be ignited by many sources such as pilot lights, electrical motors and switches.

SECTION V - REACTIVITY DATA

STABILITY: STABLE
CONDITIONS TO AVOID
Excessive heat, poor ventilation, corrosive atmospheres, excessive aging.

INCOMPATIBILITY (MATERIALS TO AVOID)
Alkaline materials, strong acids and oxidizing materials.

HAZARDOUS DECOMPOSITION OR BYPRODUCTS
Carbon monoxide, carbon dioxide, oxides of nitrogen, and possibly acrolein.

HAZARDOUS POLYMERIZATION: WILL OCCUR

SECTION VI - HEALTH HAZARD DATA

INHALATION HEALTH RISKS AND SYMPTOMS OF EXPOSURE
Inhalation: Dizziness, breathing difficulty, headaches & loss of coordination.

SKIN AND EYE CONTACT HEALTH RISKS AND SYMPTOMS OF EXPOSURE
Eye contact: Severe irritation, tearing, redness and blurred vision.

SKIN ABSORPTION HEALTH RISKS AND SYMPTOMS OF EXPOSURE
Skin contact: Can dry and defat skin causing cracks, irritation, and dermatitis.

INGESTION HEALTH RISKS AND SYMPTOMS OF EXPOSURE
Ingestion: Can cause gastrointestinal irritation, vomiting, nausea, and diarrhea.

HEALTH HAZARDS (ACUTE AND CHRONIC)
Inhalation-Dizziness, breathing difficulty, headaches, & loss of coordination. Eye contact-Severe irritation, tearing, redness, and blurred vision. Skin contact-Can dry and defat skin causing cracks, irritation, and dermatitis. Ingestion-Can cause gastrointestinal irritation, vomiting, nausea, & diarrhea. No chronic health effects.

CARCINOGENICITY: NTP CARCINOGEN: No IARC MONOGRAPHS: No OSHA REGULATED: No

INFORMATION NOT AVAILABLE.

MEDICAL CONDITIONS GENERALLY AGGRAVATED BY EXPOSURE
Anesthesia, respiratory tract irritation, dermatitis, nausea, vomiting.

EMERGENCY AND FIRST AID PROCEDURES
Inhalation overexposure-Move person to fresh air. If breathing stops, apply artificial respiration and seek immediate medical attention. Eye contact-flush with large quantities of water for 15 minutes. Skin contact-Wash thoroughly with soap and water and see a doctor. Ingestion-Do not induce vomiting, can cause chemical pneumonitis and pulmonary edema. Contact physician immediately.

SECTION VII - PRECAUTIONS FOR SAFE HANDLING AND USE

STEPS TO BE TAKEN IN CASE MATERIAL IS RELEASED OR SPILLED
Eliminate ignition sources, provide good ventilation, dike spill area and add absorbent earth or sawdust to spilled liquid. Thoroughly wet with water and mix.

WASTE DISPOSAL METHOD
Collect absorbent/water/spilled liquid mixture into metal containers and add enough water to cover. Consult local,state & federal hazardous waste regulations before disposing into approved hazardous waste landfills. Obey relevant laws.

PRECAUTIONS TO BE TAKEN IN HANDLING AND STORING
Use non-sparking utensils when handling this material. Avoid hot metal surface. Use in cool, well-ventilated areas. Keep containers closed when not in use. Keep away from excessive heat and open flames.

OTHER PRECAUTIONS
Smoking in area where this material is used should be strictly prohibited. Tools used with this material should be made from aluminum, brass or copper. Plastic utensils should not be used. NOTE: This information is accurate to the best knowledge of this company, but is furnished without any expressed or implied warranties.

SECTION VIII - CONTROL MEASURES

RESPIRATORY PROTECTION
When spraying this material use a NIOSH approved cartridge respirator or gas mask suitable to keep airborne mists and vapor concentrations below the time weighted threshold limit values. When using in poorly ventilated and confined spaces, use a fresh-air supplying respirator or a self-contained breathing apparatus.

VENTILATION
General mechanical ventilation or local exhaust should be suitable to keep vapor concentrations below TLV. Ventilation equip. must be explosion proof.

PROTECTIVE GLOVES
Impermeable chemical handling gloves for skin protection.

EYE PROTECTION
Use chemical safety glasses, goggles, and faceshields for eye protection.

OTHER PROTECTIVE CLOTHING OR EQUIPMENT
Use impermeable aprons and protective clothing whenever possible to prevent skin contact. The use of head caps whenever possible is strongly recommended.

WORK/HYGIENIC PRACTICES
Eye washes and safety showers in the workplace are recommended.

SECTION IX - SHIPPING DATA

D.O.T. PROPER SHIPPING NAME.....PAINT, FLAMMABLE LIQUID
D.O.T. HAZARD CLASS.....FLAMMABLE LIQUID
D.O.T. LABELS REQUIRED.....FLAMMABLE LIQUID
D.O.T. PLACARDS REQUIRED.....YES FLAMMABLE
BILL OF LADING DESCRIPTION.....PAINT, FLAMMABLE LIQUID
UN/NA CODE.....UN1263

SECTION X - DISCLAIMER

To the best of our knowledge, the information contained herein is accurate, obtained from sources believed by this company to be accurate.

MATERIAL SAFETY DATA SHEET

This Material Safety Data Sheet conforms to the requirements of ANSI Z400.1.
THIS MSDS COMPLIES WITH 29 CFR 1910.1200 (HAZARD COMMUNICATION STANDARD)
IMPORTANT: Read this MSDS before handling & disposing of this product.
Pass this information on to employees, customers, & users of this product.

SECTION 1. IDENTIFICATION OF THE SUBSTANCE/PREPARATION AND COMPANY

PRODUCT IDENTITY: CROWN XYLOL (XYLENE)
COMPANY IDENTITY: PACKAGING SERVICE CO., INC.
COMPANY ADDRESS: 1904 MYKAWA ROAD / P O Box 875
COMPANY CITY: PEARLAND, TX 77581
COMPANY PHONE: 1-281-485-1458
CHEMTREC PHONE: 1-800-424-9300

SECTION 2. COMPOSITION/INFORMATION ON INGREDIENTS

CONTAINS: 75-85% MIXED XYLENES (1330-20-7) [215-535-7],
15-25% ETHYLBENZENE (100-41-4) [202-849-4]
Number in parentheses is CAS #, number in brackets is European EC #.

SECTION 3. HAZARDS IDENTIFICATION

RISK STATEMENTS:
Flammable Liquid
R36/37/38 Irritating to eyes, respiratory system and skin.
R20/65 Harmful by inhalation may cause lung damage if swallowed.

SAFETY STATEMENTS:
S16 Keep away from sources of ignition. No smoking.
S29 Do not empty into drains.
S24/25 Avoid contact with skin and eyes.

SECTION 4. FIRST AID MEASURES

EYE CONTACT:
For eyes, flush with plenty of water for 15 minutes & get medical attention.

SKIN CONTACT:
In case of contact with skin immediately remove contaminated clothing.
Wash thoroughly with soap & water. Wash contaminated clothing before reuse.

INHALATION:
After high vapor exposure, remove to fresh air. If breathing is difficult, give oxygen. If breathing has stopped give artificial respiration.

SWALLOWING:
If swallowed, CALL A PHYSICIAN IMMEDIATELY! Do NOT induce vomiting. Have patient lie down & keep warm. Vomiting may lead to pneumonitis, which may be fatal.

XYL001

SECTION 5. FIRE FIGHTING MEASURES

EXTINGUISHING MEDIA:
NFPA Class B extinguishers (Carbon Dioxide or foam) for Class I C liquid fires.

SPECIAL FIRE FIGHTING PROCEDURES:
Water spray may be ineffective on fire but can protect fire fighters & cool closed containers. Use fog nozzles if water is used.
Do not enter confined fire-space without full bunker gear.
(Helmet with face shield, bunker coats, gloves & rubber boots).
Use NIOSH approved positive-pressure self-contained breathing apparatus.

UNUSUAL EXPLOSION AND FIRE PROCEDURES
FLAMMABLE!! VAPORS CAN CAUSE FLASH FIRE
Keep container tightly closed.
Isolate from oxidizers, heat, sparks, electric equipment & open flame.
Closed containers may explode if exposed to extreme heat.
Applying to hot surfaces requires special precautions.
Empty container very hazardous! Continue all label precautions!

SECTION 6. ACCIDENTAL RELEASE MEASURES

CONTAINMENT TECHNIQUES:
Stop spill at source. Dike area & contain.

CLEAN-UP PROCEDURES:
Clean up remainder with absorbent materials. Mop up & dispose of. Persons without proper protection should be kept from area until cleaned up.

SECTION 7. HANDLING AND STORAGE

HANDLING:
Isolate from oxidizers, heat, sparks, electric equipment & open flame.
Use only with adequate ventilation. Avoid breathing of vapor or spray mist.
Avoid prolonged or repeated contact with skin.
Wear OSHA Standard goggles or face shield. Consult Safety Equipment Supplier.
Wear gloves, apron & footwear impervious to this material. Wash clothing before reuse.
Avoid free fall of liquid. Ground containers when transferring. Do not flame cut, saw, drill, braze, or weld. Empty container very hazardous! Continue all label precautions!

STORAGE:
Do not store above 49 C/120 F. Store large amounts in structures made for OSHA Class I C liquids Keep container tightly closed & upright when not in use to prevent leakage.
OSHA Class I C liquids

SECTION 8. EXPOSURE CONTROLS/PERSONAL PROTECTION:

EXPOSURE CONTROLS
Ventilate to keep vapors of this material below 50 ppm.
If over TLV, in accordance with 29 CFR 1910.134, use NIOSH approved positive-pressure self-contained breathing apparatus.
Consult Safety Equipment Supplier. Use explosion-proof equipment.

VENTILATION:

LOCAL EXHAUST	: Necessary
MECHANICAL (GENERAL)	: Acceptable
SPECIAL	: None
OTHER	: None

PERSONAL PROTECTIONS:
Wear OSHA Standard goggles or face shield. Consult Safety Equipment Supplier.
Wear gloves, apron & footwear impervious to this material. Wash clothing before reuse.

WORK & HYGIENIC PRACTICES:
Provide readily accessible eye wash stations & safety showers.
Wash at end of each workshift & before eating, smoking or using the toilet.
Promptly remove clothing that becomes contaminated. Destroy contaminated leather articles. Launder or discard contaminated clothing.

SECTION 9. PHYSICAL DATA

APPEARANCE:		Liquid, Water-White
ODOR:		Aromatic
BOILING RANGE:	136 140 142 C /	278 284 288 F
AUTO IGNITION TEMPERATURE:	510 C /	950 F (Lowest Component)
LOWER FLAMMABLE LIMIT IN AIR (% by vol):	1.1	
FLASH POINT (TEST METHOD):	27 C /	81 F (TCC)
FLAMMABILITY CLASSIFICATION: Class I C		
GRAVITY @ 60 F:		
API:		31.1
SPECIFIC GRAVITY (Water=1):		.870
POUNDS/GALLON:		7.247
VOC'S (>0.44 Lbs/Sq In):	100.1 Vol. % /	871.0 g/L / 7.255 Lbs/Gal
TOTAL VOC'S (TVOC):	100.0 Vol. % /	870.0 g/L / 7.247 Lbs/Gal
NONEXEMPT VOC'S (CVOC):	100.0 Vol. % /	870.0 g/L / 7.247 Lbs/Gal
HAZARDOUS AIR POLLUTANTS (HAPS):	100.0 Wt. % /	870.0 g/L / 7.247 Lbs/Gal
VAPOR PRESSURE (mm of Hg)@20 C		6.4
NONEXEMPT VOC PARTIAL PRESSURE (mm of Hg @ 20 C)		6.4
VAPOR DENSITY (air=1):		3.7
WATER ABSORPTION:		Negligible
REFRACTIVE INDEX:		1.496

SECTION 10. STABILITY & REACTIVITY

STABILITY:
Stable

CONDITIONS TO AVOID:
Isolate from oxidizers, heat, sparks, electric equipment & open flame.

MATERIALS TO AVOID:
Isolate from strong oxidizers such as permanganates, chromates & peroxides.

HAZARDOUS DECOMPOSITION PRODUCTS:
Carbon Monoxide, Carbon Dioxide from burning.

HAZARDOUS POLYMERIZATION:
Will not occur.

SECTION 11. TOXICOLOGICAL INFORMATION

MATERIAL	CAS #	TWA (OSHA)	TLV (ACGIH)	HAP
Mixed Xylenes	1330-20-7	100 ppm	100 ppm A4	Yes
Ethylbenzene	100-41-4	100 ppm	100 ppm A3	Yes

In addition to EPA Hazardous Air Pollutants showing `Yes' under "HAP" above, using manufacturers' data, based on EPA Method 311, the following EPA Hazardous Air Pollutants may be present in trace amounts (less than 0.1%):
Benzene, Toluene, Cumene

SECTION 11. TOXICOLOGICAL INFORMATION (CONTINUED)

MATERIAL	CAS #	CEILING	STEL (OSHA/ACGIH)
Mixed Xylenes	1330-20-7	None Known	150 ppm
Ethylbenzene	100-41-4	None Known	125 ppm

ACUTE HAZARDS

EYE & SKIN CONTACT:
Primary irritation to skin, defatting, dermatitis.
Absorption thru skin increases exposure.
Primary irritation to eyes, redness, tearing, blurred vision.
Liquid can cause eye irritation. Wash thoroughly after handling.

INHALATION:
Anesthetic. Irritates respiratory tract. Acute overexposure can cause serious nervous system depression. Vapor harmful.
Acute overexposure can cause damage to kidneys, blood, nerves, liver & lungs.

SWALLOWING:
Harmful or fatal if swallowed.
Swallowing can cause abdominal irritation, nausea, vomiting & diarrhea.

SUBCHRONIC HAZARDS/CONDITIONS AGGREVATED

CONDITIONS AGGREVATED:
Chronic overexposure can cause damage to kidneys, blood, nerves, liver & lungs.
Persons with severe skin, liver or kidney problems should avoid use.

CHRONIC HAZARDS

CANCER, REPRODUCTIVE & OTHER CHRONIC HAZARDS:
Potential Cancer Hazard based on tests with laboratory animals using Ethylbenzene.
Overexposure may create cancer risk.
Leukemia been reported in humans from Benzene.
This product may contain less than 100 ppm of Benzene.
Not considered hazardous in such low concentrations.
Absorption thru skin may be harmful. Studies with laboratory animals indicate this product can cause damage to fetus.

SECTION 12. ECOLOGICAL INFORMATION

MAMMALIAN INFORMATION:

MATERIAL	CAS #	LOWEST KNOWN LETHAL DOSE DATA
		LOWEST KNOWN LD50 (ORAL)
Xylene	1330-20-7	4000.0 mg/kg(Rats)
		LOWEST KNOWN LC50 (VAPORS)
Xylene	1330-20-7	5000 ppm (Mice)

AQUATIC ANIMAL INFORMATION:
The most sensitive known marine group to any component of this product is:
Fish are adversely affected by components of this product.

MOBILITY:
This material is a mobile liquid.

DEGRADABILITY:
This product is non-biodegradable.

ACCUMULATION:
This product does not accumulate or biomagnify in the environment.

SECTION 13. DISPOSAL CONSIDERATIONS

Recycle / dispose of observing national, regional, state, provincial and local health, safety & pollution laws.
If questions exist, contact the appropriate agencies.

SECTION 14. TRANSPORT INFORMATION

DOT SHIPPING NAME: Xylene, 3, UN1307, PG III
DRUM LABEL: (FLAMMABLE LIQUID)
IATA / ICAO: Xylene, 3, UN1307, PG III
IMO / IMDG: Xylene, 3, UN1307, PG III

If >125 pounds of this product is in one container, the RQ is exceeded.

EMERGENCY RESPONSE GUIDEBOOK NUMBER: 130

SECTION 15. REGULATORY INFORMATION

STATE REQULATIONS:
CALIFORNIA PROPOSITION 65: This product contains the following chemical known to the State of California to cause cancer: Ethylbenzene

SECTION 15. REGULATORY INFORMATION (CONTINUED)

EPA REGULATIONS:

SARA SECTION 311/312 HAZARDS: Acute Health, Fire
All components of this product are on the TSCA list.
SARA Title III Section 313 Supplier Notification
This product contains the indicated <*> toxic chemicals subject to the reporting requirements of Section 313 of the Emergency Planning & Community Right-To-Know Act of 1986 & of 40 CFR 372. This information must be included in all MSDSs that are copied and distributed for this material.

SARA TITLE III INGREDIENTS	CAS#	WT. % (REG. SECTION)	RQ (LBS)
*Mixed Xylenes	1330-20-7	<90 (311,312,313,RCRA)	100
*Ethylbenzene	100-41-4	<30 (311,312,313,RCRA)	None

IF > 125 POUNDS OF THIS PRODUCT IS IN ONE CONTAINER THE "RQ" OF XYLENE IS EXCEEDED.

INTERNATIONAL REGULATIONS:
The components of this product are listed on the chemical inventories of the following countries:
Australia, Canada, Europe (EINECS), Japan, Korea, United Kingdom.

SECTION 16. OTHER INFORMATION

HAZARD RATINGS:
HEALTH (NFPA): 2
HEALTH (HMIS): 2
FLAMMABILITY: 3
REACTIVITY: 0

This information is intended solely for the use of individuals trained in the NFPA & HMIS hazard rating systems.

EMPLOYEE TRAINING:
Employees should be made aware of all hazards of this material (as stated in this MSDS) before handling it.

NOTICE

The supplier disclaims all expressed or implied warranties of merchantability or fitness for a specific use, with respect to the product or the information provided herein, except for conformation to contracted specifications.
All information appearing herein is based upon data obtained from manufacturers and/or recognized technical sources. While the information is believed to be accurate, we make no representations as to its accuracy or sufficiency. Conditions of use are beyond our control, and therefore users are responsible for verifying the data under their own operating conditions to determine whether the product is suitable for their particular purposes and they assume all risks of their use, handling, and disposal of the product. Users also assume all risks in regards to the publication or use of, or reliance upon, information contained herein.
This information relates only to the product designated herein, and does not relate to its use in combination with any other material or process.

Univar USA Inc Material Safety Data Sheet

For Additional Information contact MSDS Coordinator during business hours, Pacific time: (425) 889-3400

Notice

Univar USA Inc. ("Univar") expressly disclaims all express or implied warranties of merchantability and fitness for a particular purpose, with respect to the product or information provided herein, and shall under no circumstances be liable for incidental or consequential damages.

Do not use ingredient information and/or ingredient percentages in this MSDS as a product specification. For product specification information refer to a product specification sheet and/or a certificate of analysis. These can be obtained from your local Univar sales office.

All information appearing herein is based upon data obtained from the manufacturer and/or recognized technical sources. While the information is believed to be accurate, Univar makes no representations as to its accuracy or sufficiency. Conditions of use are beyond Univar's control and therefore users are responsible to verify this data under their own operating conditions to determine whether the product is suitable for their particular purposes and they assume all risks of their use, handling, and disposal of the product, or from the publication or use of, or reliance upon, information contained herein.

This information relates only to the product designated herein, and does not relate to its use in combination with any other material or in any other process

SAFETY DATA SHEET

This Safety Data Sheet conforms to ANSI Z400.5, and to the format requirements and the International Chemical Safety Cards of the Global Harmonizing System.
THIS SDS COMPLIES WITH 29 CFR 1910.1200 (HAZARD COMMUNICATION STANDARD)
IMPORTANT: Read this SDS before handling & disposing of this product.
Pass this information on to employees, customers, & users of this product.

SECTION 1. IDENTIFICATION OF THE SUBSTANCE OR MIXTURE AND OF THE SUPPLIER

PRODUCT IDENTITY: CROWN MEK (METHYL ETHYL KETONE)
REVISION DATE: 06/06/2011 SUPERCEDES: 09/20/2000
COMPANY IDENTITY: Packaging Service Co., Inc.
COMPANY ADDRESS: 1904 Mykawa Road / P O Box 875
COMPANY CITY: Pearland, TX 77581
COMPANY PHONE: 1-281-485-1458
EMERGENCY PHONES: CHEMTREC: 1-800-424-9300 (USA)
CANUTEC: 1-613-996-6666 (CANADA)

SECTION 2. HAZARDS IDENTIFICATION

DANGER!!

RISK STATEMENTS:

R36/37/38	Irritating to eyes, respiratory system and skin.
R11	Highly Flammable.
R66	Repeated exposure may cause skin dryness or cracking.
R67	Vapors may cause drowsiness and dizziness.

SAFETY STATEMENTS:

S9	Keep container in a well-ventilated place.
S16	Keep away from sources of ignition. No smoking.

SEE SECTIONS 8, 11 & 12 FOR TOXICOLOGICAL INFORMATION.

SECTION 3. COMPOSITION/INFORMATION ON INGREDIENTS

MATERIAL	CAS#	EINECS#	WT %
Methyl Ethyl Ketone	78-93-3	201-159-0	95-100

SECTION 4. FIRST AID MEASURES

EYE CONTACT:
For eyes, flush with plenty of water for 15 minutes & get medical attention.

SKIN CONTACT:
In case of contact with skin immediately remove contaminated clothing. Wash thoroughly with soap & water. Wash contaminated clothing before reuse.

INHALATION:
After high vapor exposure, remove to fresh air. If breathing is difficult, give oxygen. If breathing has stopped, trained personnel should immediately begin artificial respiration. If the heart has stopped, trained personnel should immediately begin cardiopulmonary resuscitation (CPR).

SWALLOWING:
Rinse mouth. GET MEDICAL ATTENTION IMMEDIATELY. Do NOT give liquids to an unconscious or convulsing person.

SECTION 5. FIRE FIGHTING MEASURES

FIRE & EXPLOSION PREVENTIVE MEASURES
NO open flames, NO sparks, & NO smoking. Use a closed system, ventilation, explosion-proof electrical equipment, lighting.

EXTINGUISHING MEDIA
Use dry powder, AFFF, foam, carbon dioxide.

SPECIAL FIRE FIGHTING PROCEDURES
Water spray may be ineffective on fire but can protect fire-fighters & cool closed containers. Use fog nozzles if water is used.
Do not enter confined fire-space without full bunker gear. (Helmet with face shield, bunker coats, gloves & rubber boots).
Use NIOSH approved positive-pressure self-contained breathing apparatus.

SECTION 5. FIRE FIGHTING MEASURES (CONTINUED)

UNUSUAL EXPLOSION AND FIRE PROCEDURES

HIGHLY FLAMMABLE!! VAPORS CAN CAUSE FLASH FIRE

Isolate from oxidizers, heat, sparks, electric equipment & open flame.
Closed containers may explode if exposed to extreme heat.
Applying to hot surfaces requires special precautions.
Empty container very hazardous! Continue all label precautions!

SECTION 6. ACCIDENTAL RELEASE MEASURES

PERSONAL PROTECTIVE MEASURES:

Vapors may ignite explosively & spread long distances. Prevent vapor buildup.
Keep unprotected personnel away. Remove all ignition sources.
Use self-contained breathing apparatus.

ENVIRONMENTAL PRECAUTIONS:

Keep from entering storm sewers and ditches which lead to waterways.

CONTAINMENT AND CLEAN-UP MEASURES:

Stop spill at source. Dike and contain.
Absorb remaining liquid in sand or inert absorbent.
Remove to safe place.

SECTION 7. HANDLING AND STORAGE

HANDLING

Isolate from oxidizers, heat, sparks, electric equipment & open flame.
Use only with adequate ventilation. Avoid breathing of vapor or spray mist.
Avoid contact with skin & eyes.
Wear OSHA Standard goggles or face shield. Consult Safety Equipment Supplier. Wear goggles, face shield, gloves, apron & footwear impervious to material. Wash clothing before reuse.
Avoid free fall of liquid. Ground containers when transferring. Do not flame cut, saw, drill, braze, or weld. Empty container very hazardous! Continue all label precautions!
To minimize static discharge when transferring, ensure electrical continuity by bonding and grounding all equipment. Use an inlet line diameter of at least 3.5 inches (8.9 centimeters) with a maximum flow rate of 1 meter/second.

STORAGE

Keep in fireproof surroundings. Keep separated from strong oxidants, strong acids.
Keep cool. Do not store above 49 C/120 F.
Keep container tightly closed & upright when not in use to prevent leakage.

SECTION 8. EXPOSURE CONTROLS/PERSONAL PROTECTION

MATERIAL	CAS#	EINECS#	TWA (OSHA)	TLV (ACGIH)
Methyl Ethyl Ketone	78-93-3	201-159-0	200 ppm	200 ppm

MATERIAL	CAS#	EINECS#	CEILING	STEL(OSHA/ACGIH)	HAP
Methyl Ethyl Ketone	78-93-3	201-159-0	None Known	300 ppm	No

This product contains no EPA Hazardous Air Pollutants (HAP) in amounts > 0.1%.

RESPIRATORY EXPOSURE CONTROLS
A respiratory protection program that meets OSHA 29 CFR 1910.134 and ANSI Z86.2 requirements or European Standard EN 149 must be followed whenever workplace conditions warrant a respirator's use.

VENTILATION
LOCAL EXHAUST: Necessary MECHANICAL (GENERAL): Acceptable
SPECIAL: None OTHER: None
Please refer to ACGIH document, "Industrial Ventilation, A Manual of Recommended Practices", most recent edition, for details.

PERSONAL PROTECTIONS:
Wear OSHA Standard goggles or face shield. Consult Safety Equipment Supplier. Wear goggles, face shield, gloves, apron & footwear impervious to material. Wash clothing before reuse.

WORK & HYGIENIC PRACTICES:
Provide readily accessible eye wash stations & safety showers.
Wash at end of each workshift & before eating, smoking or using the toilet.
Promptly remove clothing that becomes contaminated. Destroy contaminated leather articles. Launder or discard contaminated clothing.

SECTION 9. PHYSICAL & CHEMICAL PROPERTIES

APPEARANCE:	Liquid, Water-White
ODOR:	Ketone
ODOR THRESHOLD:	Not Available
pH (Neutrality):	Not Applicable
MELTING POINT/FREEZING POINT:	Not Available
BOILING RANGE (IBP,50%,Dry Point):	77 79 81 C / 172 175 178 F
FLASH POINT (TEST METHOD):	-2 C / 28 F (TCC)
EVAPORATION RATE (n-BUTYL ACETATE=1):	3.6
FLAMMABILITY CLASSIFICATION:	Class I B
LOWER FLAMMABLE LIMIT IN AIR (% by vol):	1.8
UPPER FLAMMABLE LIMIT IN AIR (% by vol):	10.0
VAPOR PRESSURE (mm of Hg)@20 C	70.0
VAPOR DENSITY (air=1):	2.5
GRAVITY @ 68/68 F / 20/20 C:	
SPECIFIC GRAVITY (Water=1):	0.805
POUNDS/GALLON:	6.706
WATER SOLUBILITY:	Appreciable
PARTITION COEFFICIENT (n-Octane/Water):	Not Available
AUTO IGNITION TEMPERATURE:	515 C / 960 F
DECOMPOSITION TEMPERATURE:	Not Available
REFRACTIVE INDEX:	1.379
VOC'S (>0.44 Lbs/Sq In) :	100.0 Vol% / 805.0 g/L / 6.7 Lbs/Gal
TOTAL VOC'S (TVOC)*:	100.0 Vol% / 805.0 g/L / 6.7 Lbs/Gal
NONEXEMPT VOC'S (CVOC)*:	100.0 Vol% / 805.0 g/L / 6.7 Lbs/Gal
HAZARDOUS AIR POLLUTANTS (HAPS):	0.0 Wt% /0.0 g/L / 0.000 Lbs/Gal
NONEXEMPT VOC PARTIAL PRESSURE (mm of Hg @ 20 C)	70.0

* Using California South Coast Air Quality Management District (SCAQMD) Rule 443.1.

SECTION 10. STABILITY & REACTIVITY

STABILITY
Stable under normal conditions.

CONDITIONS TO AVOID
Isolate from oxidizers, heat, sparks, electric equipment & open flame.

MATERIALS TO AVOID
Reacts with strong oxidants, causing fire & explosion hazard.

HAZARDOUS DECOMPOSITION PRODUCTS
Carbon Monoxide, Carbon Dioxide from burning.

HAZARDOUS POLYMERIZATION
Will not occur.

SECTION 11. TOXICOLOGICAL INFORMATION

ACUTE HAZARDS

EYE & SKIN CONTACT:
Primary irritation to skin, defatting, dermatitis.
Primary irritation to eyes, redness, tearing, blurred vision.
Liquid can cause eye irritation. Wash thoroughly after handling.

INHALATION:
Anesthetic. Irritates respiratory tract. Acute overexposure can cause serious nervous system depression. Vapor harmful.

SWALLOWING:
Swallowing can cause abdominal irritation, nausea, vomiting & diarrhea.

SUBCHRONIC HAZARDS/CONDITIONS AGGRAVATED

CONDITIONS AGGRAVATED
Persons with severe skin, liver or kidney problems should avoid use.

CHRONIC HAZARDS

CANCER, REPRODUCTIVE & OTHER CHRONIC HAZARDS:
This product has no carcinogens listed by IARC, NTP, NIOSH, OSHA or ACGIH, as of this date, greater or equal to 0.1%.

MAMMALIAN TOXICITY INFORMATION

MATERIAL	CAS#	EINECS#	LOWEST KNOWN LETHAL DOSE DATA
Methyl Ethyl Ketone	78-93-3	201-159-0	LOWEST KNOWN LD50 (ORAL) 3400.0 mg/kg(Rats)
Methyl Ethyl Ketone	78-93-3	201-159-0	LOWEST KNOWN LC50 (VAPORS) 2000 ppm (Rats)
Methyl Ethyl Ketone	78-93-3	201-159-0	LOWEST KNOWN LD50 (SKIN) 12600.0 mg/kg (Rabbits)

SECTION 12. ECOLOGICAL INFORMATION

AQUATIC ANIMAL INFORMATION:
The most sensitive known aquatic group to any component of this product is:
Fish exposed to 5120 ppm or mg/L are adversely affected by
components of this product. Keep out of sewers and natural water supplies.

MOBILITY IN SOIL
This material is a mobile liquid.

DEGRADABILITY
This product is completely biodegradable.

ACCUMULATION
This product does not accumulate or biomagnify in the environment.

SECTION 13. DISPOSAL CONSIDERATIONS

Processing, use or contamination may change the waste management options.
Recycle / dispose of observing national, regional, state, provincial and local
health, safety & pollution laws. If in doubt, contact appropriate agencies.

SECTION 14. TRANSPORT INFORMATION

IF > 5000 LB / 2272 KG OF THIS PRODUCT IN 1 CONTAINER,
IT EXCEEDS THE "RQ" OF METHYL ETHYL KETONE.

DOT SHIPPING NAME: UN1193, RQ, Methyl Ethyl Ketone, 3, PG-II
DRUM LABEL: (FLAMMABLE LIQUID)
IATA / ICAO: UN1193, Methyl Ethyl Ketone, 3, PG-II
IMO / IMDG: UN1193, Methyl Ethyl Ketone, 3, PG-II
EMERGENCY RESPONSE GUIDEBOOK NUMBER: 127

SECTION 15. REGULATORY INFORMATION

EPA REGULATION:
SARA SECTION 311/312 HAZARDS: Acute Health, Fire

All components of this product are on the TSCA list.
This material contains no known products restricted under SARA Title III,
Section 313 in amounts greater or equal to 1%.

SARA TITLE III INGREDIENTS	CAS#	EINECS#	WT%	(REG.SECTION)	RQ(LBS)
Methyl Ethyl Ketone	78-93-3	201-159-0	95-100	(311,312)	5000

SECTION 15. REGULATORY INFORMATION (CONTINUED)

> 5000 LB / 2272 KG OF THIS PRODUCT IN 1 CONTAINER EXCEEDS THE "RQ" OF METHYL ETHYL KETONE.
Any release equal to or exceeding the RQ must be reported to the National Response Center (800-424-8802) and appropriate state and local regulatory agencies as described in 40 CFR 302.6 and 40 CFR 355.40 respectively.
Failure to report may result in substantial civil and criminal penalties.
State & local regulations may be more restrictive than federal regulations.

STATE REGULATIONS:
THIS PRODUCT MEETS REQUIREMENTS OF SOUTHERN CALIFORNIA AQMD RULE 443.1 & SIMILAR REGULATIONS

CALIFORNIA PROPOSITION 65: This product contains no chemicals known to the State of California to cause cancer & reproductive toxicity.

INTERNATIONAL REGULATIONS
The components of this product are listed on the chemical inventories of the following countries:
Australia (AICS), Canada (DSL, NDSL), China (IECSC), Europe (EINECS, ELINCS), Japan (METI/CSCL, MHLW/ISHL), South Korea (KECI), New Zealand (NZIoC), Philippines (PICCS), Switzerland (SWISS), Taiwan (NECSI), USA (TSCA).

CANADA: WORKPLACE HAZARDOUS MATERIALS INFORMATION SYSTEM (WHMIS)
B2: Flammable Liquid.
D2B: Irritating to skin / eyes.

SECTION 16. OTHER INFORMATION

HAZARD RATINGS:
HEALTH (NFPA): 1, HEALTH (HMIS): 2, FLAMMABILITY: 3, REACTIVITY: 0
(Personal Protection Rating to be supplied by user based on use conditions.)
This information is intended solely for the use of individuals trained in the NFPA & HMIS hazard rating systems.

EMPLOYEE TRAINING
See Section 2 for Risk & Safety Statements. Employees should be made aware of all hazards of this material (as stated in this SDS) before handling it.

NOTICE

The supplier disclaims all expressed or implied warranties of merchantability or fitness for a specific use, with respect to the product or the information provided herein, except for conformation to contracted specifications. All information appearing herein is based upon data obtained from manufacturers and/or recognized technical sources. While the information is believed to be accurate, we make no representations as to its accuracy or sufficiency.
Conditions of use are beyond our control, and therefore users are responsible for verifying the data under their own operating conditions to determine whether the product is suitable for their particular purposes and they assume all risks of their handling, and disposal of the product. Users also assume all risks in regards to the publication or use of, or reliance upon information contained herein.
This information relates only to the product designated herein, and does not relate to its use in combination with any other material or process.

Unless updated, the Safety Data Sheet is valid until 06/06/2014.

APPENDIX G:
EQUIPMENT AND POLLUTION CONTROL INFORMATION

ABRASIVE BLASTING INFORMATION

Marco®

experience, trust, service

Operator's Manual
Part # 1090072
Revision: February 25, 2009

6.0 Cubic Foot C-Series Blast Pot

with KwikFire 125 Remote Control System

⚠ WARNING

Before using this equipment, read, understand and follow all instructions in the Operator's Manual. If the user or assistants cannot read or understand the warnings and instructions, the employer of the user and assistants must provide adequate and necessary training to ensure proper operation and compliance with all safety procedures pertaining to this equipment. If Operator's Manuals have been lost, contact your distributor or call (563) 324-2519 for replacements. Failure to comply with the above warning could result in death or serious injury.

For more information call:

800-BLAST-IT

Phone: (800) 252-7848
Fax: (563) 324-6258
e-mail: sales@marcousa.com
www.marcousa.com

Vision Statement

To be the World's First Choice for Abrasives, Blasting, Painting, and Safety Equipment & Supplies.

Mission Statement

To provide leadership and innovation to the surface preparation industry. We will dedicate our efforts to the continuous improvement of our products, services, processes, people and most importantly the quality of our Customer's experience.

Quality Statement

Marco is committed to providing superior quality in the design, manufacturing, distribution and service of our products. As an ISO 9001:2000 registered company, Marco's quality systems assure our products will meet or exceed our Customer's expectations. Continuous Improvement in our processes and Supply Chain Integration comprise the core of our Business Strategy for delivering exceptional quality and value in every Marco product and service.

Management Philosophy

We are a Company dedicated to the success of every Customer and Associate. We will discuss, debate, challenge, measure and test our ideas. We will be boundless and limitless in our passion to improve. Through sound leadership and dedicated associates, we will ensure a long term, profitable future for Marco, our Associates, Customers and Suppliers.

Table of Contents

- ▶ **Definition of Terms** 1
- ▶ **Hazard Identifications** 2-3
- ▶ **Media Consumption Chart** 4

- ▶ **6.0 Cubic Foot C- Series Blast Pot** 5-16
  - Description & Features 5
  - Operational Requirements 5
  - Operating Instructions 5-8
  - Troubleshooting 7
  - Assembly/Disassembly 9-10
  - Schematic 11-16
- ▶ **Maintenance Notes** 17
- ▶ **Warranty** 18
  - Disclaimer of Warranty 18
  - Exclusive Remedy for Warranty Claims 18
  - Limitation of Remedy 18
- ▶ **Daily Checklist** 19

Definition of Terms

⚠ DANGER

This is an example of danger. This indicates an imminently hazardous situation which, if not avoided, will result in death or serious injury.

⚠ WARNING

This is an example of a warning. This indicates a potentially hazardous situation which, if not avoided, could result in death or serious injury.

⚠ CAUTION

This is an example of a caution. This indicates a potentially hazardous situation which, if not avoided, may result in minor or moderate injury. It can also be used to alert against unsafe practices.

NOTICE

This is an example of a notice. This indicates policy or practice directly related to safety of personnel or protection of property.

⚠ WARNING

Failure to comply with ANY WARNING listed below could result in death or serious injury.

- Breathing dust containing silica could cause silicosis, a fatal lung disease. Breathing dust during blasting operations, post-blast cleaning operations, and/or servicing equipment within the blasting area may expose an individual to conditions that could cause asbestosis, lead poisoning and/or other serious or fatal diseases. Harmful dust containing toxic material from medias or surfaces being blasted can remain suspended in the air for long periods of time after blasting has ceased. A NIOSH-approved, well-maintained, respirator designed for the specific operation being performed must be used by anyone blasting, handling or using the media, and anyone in the area of the dust.
- Contact NIOSH and OSHA offices to determine the proper respirator for your specific application. The air supplied to the respirator must be at least Grade D quality as described in Compressed Gas Association Commodity Specification G-7.1 and as specified by OSHA Regulation 1910.134. Ensure air filter and respirator system hoses are not connected to non-air sources or in-plant lines that may contain nitrogen, oxygen, acetylene or other non-breathable gases. Before removing respirator, use an air monitoring instrument to determine if the atmosphere is safe to breathe.
- You must comply with all OSHA, local, City, State, Province, Country and jurisdiction regulations, ordinances and standards, related to your particular work area and environment. Keep unprotected individuals out of the work area.
- Blast operators must receive thorough training on the use of media resistant attire which includes: supplied-air respirator, blast suit, safety shoes, gloves, ear protection and eye protection. Protect the operator and bystanders by complying with NIOSH and OSHA Safety Standards.
- Inspect all equipment for wear or damage before and after each use. Failure to use Original Equipment Manufacturer repair parts and failure to immediately replace worn or damaged components could void warranties and cause malfunctions.
- Always depressurize the entire blasting system, disconnect all electrical power sources and lockout/tagout all components before any maintenance or troubleshooting is attempted. Failure to comply with the above warning could cause electrical shock and inadvertent activation of equipment resulting in death or serious injury.
- OSHA requires blast-cleaning nozzles be equipped with an operating valve, which shall be designed to be held open only by continuous hand pressure and shall close immediately upon release of hand pressure (i.e., a "deadman" control). The valve shall not be modified in any manner that would allow it to remain open without the application of continuous hand pressure by the operator. Failure to comply with the above warning could result in release of high speed media and compressed air resulting in death or serious injury. (OSHA 29 CFR 1910.244(b))
- Point the blast nozzle only at the surface being blasted. Never point the blast nozzle or media stream at yourself or others.
- Unless otherwise specified, maximum working pressure of Blast Pots and related components must not exceed 125 psi. Exceeding maximum working pressure of 125 psi could cause the Blast Pot and components to burst.
- Never weld, grind or drill on the Blast Pot (or any pressure vessel). Doing so will void ASME certification and manufacturer's warranty. Welding, grinding or drilling on the Blast Pot (or any pressure vessel) could weaken the vessel causing it to burst. (ASME Pressure Vessel Code, Section VIII, Division 1)
- This equipment is not intended for use in any area that might be considered a hazardous location, as described in the National Electric Code NFPA 70, Article 500. Use of this equipment in a hazardous location could cause an explosion or electrocution.
- This product is not for use in wet environments. Always use a Ground Fault Interrupter Circuit (GFIC) for all electrical power source connections. Use of this product in wet environments could create a shock hazard.
- Frozen moisture could cause restrictions and obstructions in pneumatic control lines. Any restriction or obstruction in the pneumatic control lines could prevent the proper activation and deactivation of the remote control system, resulting in the release of high speed media and compressed air. In conditions where moisture may freeze in the control lines an antifreeze injection system approved for this application can be installed.
- Do not cut, obstruct, restrict or pinch pneumatic control lines. Doing so could prevent the proper activation and deactivation of the remote control system, resulting in the release of high speed media and compressed air.
- Never hang objects from the Blast Pot handle. Doing so may cause the Blast Pot to become unstable and tip over.

⚠ WARNING

Failure to comply with ANY WARNING listed below could result in death or serious injury.

- Never attempt to move a blast pot containing media. Never attempt to manually move blast pots greater than 6.0 cubic foot capacity. Always use at least two capable people to manually move a blast pot on flat, smooth surfaces. A mechanical lifting device must be used if a blast pot is moved in any other manner.
- Use of Marco remote control switches with other manufacturer's remote control systems could cause unintended activation of remote control systems resulting in the release of high speed media and compressed air. Only Marco remote control switches should be used with Marco remote control systems.
- Always be certain to have secure footing when blasting. There is a recoil hazard when blasting starts that may cause user to fall and misdirect the media stream at operator or bystander.
- Never use a blast pot or attachments as a climbing device. The person could slip and fall. The blast pot could become unstable and tip over.
- The use of this product for any purpose other than originally intended or altered from its original design is prohibited.
- For equipment manufactured by entities other than Marco, you must consult the Original Equipment Manufacturer operator's manuals, information, training, instructions and warnings, for the proper and intended use of all equipment.

⚠ CAUTION

Failure to comply with ANY CAUTION listed below may result in minor or moderate injury.

- Static electricity can be generated by media moving through the blast hose causing a shock hazard. Prior to use, ground the blast pot and blast nozzle to dissipate static electricity.
- High decibel noise levels are generated during the blasting process which may cause loss of hearing. Ensure appropriate Personal Protective Equipment and hearing protection is in use.

NOTICE

Failure to comply with ANY WARNING listed below could pose a hazard to personnel or property.

- Always use media that is dry and properly screened. This will reduce the potential for obstructions to enter the remote control system, metering valve and blast nozzle.
- Moisture build-up occurs when air is compressed. Any moisture within the blast system will cause medias to clump, clogging metering valves, hoses and nozzles. Install an appropriately sized moisture separator at the inlet of the blast pot. Leave the moisture separator petcock slightly open to allow for constant release of water. If insufficient volume of air exists and petcock is unable to be left open *(at all times)* petcock should be opened frequently to release water.
- To reduce media intrusion in the air supply hose, depressurize the Blast pot before shutting off air supply from compressor.
- Inspect nozzle before placing in service. Damage to nozzle liner or jacket may occur during shipping. If you receive a damaged nozzle, contact your distributor immediately for replacement. Nozzles placed into service may not be returned. Nozzle liners are made of fragile materials and can be damaged by rough handling and striking against hard surfaces. Never use a damaged blast nozzle.
- Blasting at optimal pressure for the media used is critical to productivity. Example: For a media with an optimal blasting pressure of 100 psi at the nozzle, one pound per square inch of pressure loss will reduce blast efficiency by 1.5%. A 10 psi reduction in air pressure will cause a 15% loss of efficiency. Use a Needle Pressure Gauge to identify pressure drops in your system. Consult with your media supplier for the requirements of your media.
- Replace Blast Nozzle if liner or jacket is cracked or damaged. Replace nozzle if original orifice size has worn 1/16" or more. Determine nozzle wear by inserting a drill bit 1/16" larger than original size of nozzle orifice. If drill bit passes through nozzle, replacement is needed.
- When it comes to media & air mixtures, more is not necessarily better. Optimum blasting efficiency takes place when a lean media & air mixture is used. To correctly set the metering valve, begin with the valve fully closed and slowly increase the amount of media entering the airstream. As you increase the media flow, watch for a "blue flame" *(Figure 1)* at the exit of the nozzle. Faster cutting, reduced media consumption and lower clean-up costs, are benefits of the "blue flame".
- See Media Consumption Chart for consumption rates and required air flow (cubic feet per minute). The system must meet these minimum requirements to ensure proper function and performance.

NOTICE

Inspect nozzle before placing in service. Damage to nozzle liner or jacket may occur during shipping. If you receive a damaged nozzle, contact your distributor immediately for replacement. Nozzles placed in to service may not be returned. Nozzle liners are made of fragile materials and can be damaged by rough handling and striking against hard surfaces. Never use a damaged blast nozzle.

NOTICE

See Media Consumption Chart for consumption rates and required air flow (cubic feet per minute). The system must meet these minimum requirements to ensure proper function and performance.

NOTICE

Blasting at optimal pressure for the media used is critical to productivity. Example: for a media with an optimal blasting pressure of 100 psi at the nozzle, one pound per square inch of pressure loss will reduce blast efficiency by 1.5%. A 10 psi reduction in air pressure will cause a 15% loss of efficiency. Use a Needle Pressure Gauge to identify pressure drops in your system. Consult with your media supplier for the requirements of your media.

NOTICE

Replace Blast Nozzle if liner or jacket is cracked or damaged. Replace nozzle if original orifice size has worn 1/16" or more. Determine nozzle wear by inserting a drill bit 1/16" larger than original size of nozzle orifice. If drill bit passes through nozzle, replacement is needed.

NOTICE

▶ When it comes to media & air mixtures, more is not necessarily better. Optimum blasting efficiency takes place when a lean media & air mixture is used. To correctly set the metering valve, begin with the valve fully closed and slowly increase the amount of media entering the airstream. As you increase the media flow, watch for a "blue flame" *(Figure 1)* at the exit of the nozzle. Faster cutting, reduced media consumption and lower clean up costs, are benefits of the "blue flame".

Figure 1

Media Consumption Chart*

Nozzle Orifice	Pressure at the Nozzle (psi)								Air (in cfm), Media & Compressor Requirements
	50	60	70	80	90	100	125	140	
No. 2 (1/8")	11	13	15	17	18	20	25	28	Air (cfm)
	67	77	88	101	112	123	152	170	Media (lbs/hr)
	2.5	3	3.5	4	4.5	5	5.5	6.2	Compressor Horsepower
No. 3 (3/16")	26	30	33	38	41	45	55	62	Air (cfm)
	150	171	196	216	238	264	319	357	Media (lbs/hr)
	6	7	8	9	10	10	12	13	Compressor Horsepower
No. 4 (1/4")	47	54	61	68	74	81	98	110	Air (cfm)
	268	312	354	408	448	494	608	681	Media (lbs/hr)
	11	12	14	16	17	18	22	25	Compressor Horsepower
No. 5 (5/16")	77	89	101	113	126	137	168	188	Air (cfm)
	468	534	604	672	740	812	982	1100	Media (lbs/hr)
	18	20	23	26	28	31	37	41	Compressor Horsepower
No. 6 (3/8")	108	126	143	161	173	196	237	265	Air (cfm)
	668	764	864	960	1052	1152	1393	1560	Media (lbs/hr)
	24	28	32	36	39	44	52	58	Compressor Horsepower
No. 7 (7/16")	147	170	194	217	240	254	314	352	Air (cfm)
	896	1032	1176	1312	1448	1584	1931	2163	Media (lbs/hr)
	33	38	44	49	54	57	69	77	Compressor Horsepower
No. 8 (1/2")	195	224	252	280	309	338	409	458	Air (cfm)
	1160	1336	1512	1680	1856	2024	2459	2754	Media (lbs/hr)
	44	50	56	63	69	75	90	101	Compressor Horsepower
No. 10 (5/8")	308	356	404	452	504	548	663	742	Air (cfm)
	1875	2140	2422	2690	2973	3250	3932	4405	Media (lbs/hr)
	68.5	79.5	90	100.5	112	122	146	165	Compressor Horsepower
No. 12 (3/4")	432	504	572	644	692	784	948	1062	Air (cfm)
	2672	3056	3456	3840	4208	4608	5570	6238	Media (lbs/hr)
	96	112	127	143	154	174.5	209	236	Compressor Horsepower

*Media consumption is based on media with a bulk density of 100 lbs per Cu. Ft..

⚠ WARNING

Inspect all equipment for wear or damage before and after each use. Failure to use Original Equipment Manufacturer repair parts and failure to immediately replace worn or damaged components could void warranties and cause malfunctions. Failure to comply with the above warning could result in death or serious injury.

⚠ WARNING

Never weld, grind or drill on the Blast Pot (or any pressure vessel). Doing so will void ASME certification and manufacturer's warranty. Welding, grinding or drilling on the Blast Pot (or any pressure vessel) could weaken the vessel causing it to burst. Failure to comply with the above warning could result in death or serious injury. (ASME Pressure Vessel Code, Section VIII, Division 1)

⚠ WARNING

OSHA requires blast-cleaning nozzles be equipped with an operating valve, which shall be designed to be held open only by continuous hand pressure and shall close immediately upon release of hand pressure (i.e., a "deadman" control). The valve shall not be modified in any manner that would allow it to remain open without the application of continuous hand pressure by the operator. Failure to comply with the above warning could result in release of high speed media and compressed air resulting in death or serious injury. OSHA 29CFR 1910.244(b)

6.0 Cubic Foot C-Series Blast Pot

Description

Rugged, relentless and reliable is what you get with the Marco 6.0 Cubic Foot C-Series Blast Pot. The 60 degree Toriconical bottom allows for smooth flow of media to the reliable Regulator Metering Valve. The 6.0 C-Series Blast Pots is rated at 125 psi working pressure for use with most of today's compressors, providing proven productivity. Portability is made easy with Heavy-duty 16" Wheels or Lifting Lugs for use with mechanical lifting devices. The pneumatic or electric remote control system mounted on the side of the vessel provides easy access to the control valves and a width of only 35" allows for transport through most standard doorways. The C-Series Blast Pot features our most popular remote control; the KwikFire 125 System, the proven metering capability of the Regulator Metering Valve, making this blast pot reliable and easy to use!

Features:

- Built in accordance with ASME Pressure Vessel Code
- 150 psi working pressure for increased productivity
- 90 degree Toriconical bottom allows smooth flow of media
- Overall width of 35" fits through standard doorways
- Heavy-duty 16" Wheels and Lifting Lugs for easy portability
- Powder coat finish to withstand harsh environments
- Dimensions: Overall Height: 54" Width: 35" Depth: 35" Weight: 390 pounds

Operational Requirements

The following may cause safety hazards or reduced performance:

- Improper installation and/or maintenance of components
- Failure to place Blast Pot on a secure, flat surface
- Improper air supply pressure (minimum 50 psi, maximum 150 psi)
- Incorrect lifting/transporting of Blast Pot or incorrect or worn lifting devices

Operating Instructions (Figure 2)

Before using:

- Inspect Pop Up Valve Seat (1) and Pop Up Valve (2) for damage. Replace damaged components before use.
- Inspect Muffler Assembly (3) as instructed in the device's Operator's Manual.
- Inspect Remote Control System components as instructed in the device's Operator's Manual.
- Inspect Pusher Line (6) for damage. Replace damaged components before use.
- Inspect Blast Pot for damage. Do not use Blast Pot if damaged.
- Locate Blast Pot on an even, flat surface that can withstand the weight of a full Blast Pot. Be aware of possible erosion of surface and load shifting.
- Connect air supply hose from compressor to inlet (4) of the Blast Pot. To provide best performance, an air supply hose with an inner diameter five to six times the size of blast nozzle orifice is recommended.
- Connect blast hose to coupling installed on Metering Valve (5).

6.0 Cubic Foot C-Series Blast Pot

Figure 2

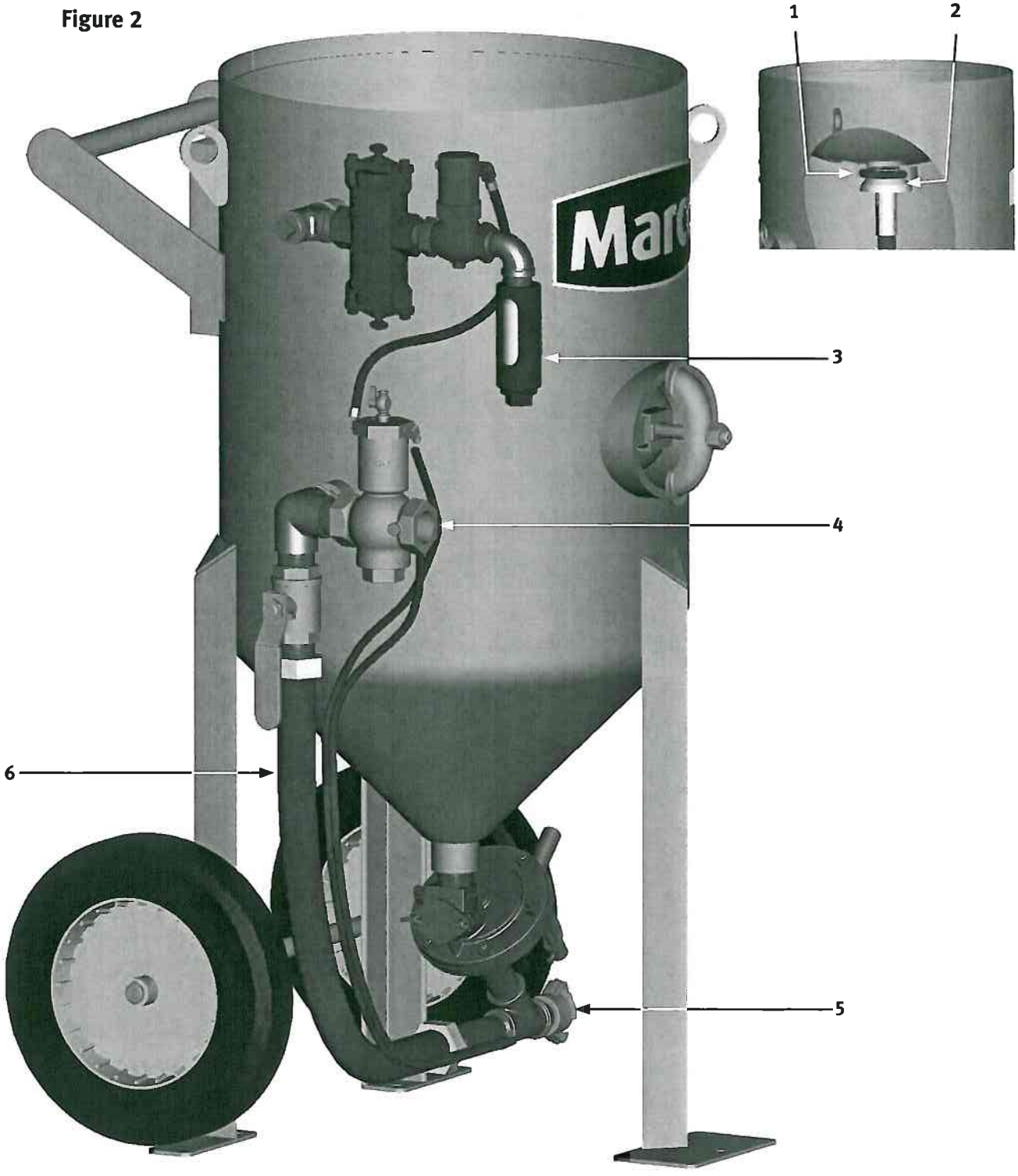

⚠ WARNING

Crushing and pinching are normal functions of this component. Do not place body parts or foreign objects in any area where there are moving parts. Failure to comply with the above warning could result in death or serious injury.

⚠ CAUTION

High decibel noise levels are generated during the blasting process which may cause loss of hearing. Ensure appropriate Personal Protective Equipment and hearing protection is in use. Failure to comply with the above caution may result in minor or moderate injury.

⚠ CAUTION

Release of high speed media and compressed air occurs during depressurization of the Blast Pot. Ensure appropriate Personal Protective Equipment is in use. Failure to comply with the above caution may result in minor or moderate injury.

⚠ WARNING

Always depressurize the entire blasting system, disconnect all electrical power sources and lockout/tagout all components before any maintenance or troubleshooting is attempted. Failure to comply with the above warning could cause electrical shock and inadvertent activation of equipment resulting in death or serious injury.

NOTICE

To reduce media intrusion in the air supply hose, depressurize the Blast Pot before shutting off air supply from compressor.

6.0 Cubic Foot C-Series Blast Pot

Operating Instructions (Figure 3)

During use:

- Fill Blast Pot through hole (A) in top of Blast Pot. Do not overfill, the capacity of the Blast Pot is 6 cubic feet of media.
- To start/stop media blasting, follow instructions in the remote control system (1) operator's manual.
- Monitor remote control system components per operator's manual.

After use:

- Empty media from Blast Pot when blasting is concluded for the day.
- To remove media, place Metering Valve (3) in the FULL OPEN position. Place Choke Valve (2) in the OFF (shut) position. Remove Blast Nozzle from nozzle holder on blast hose. Ensure blast hose is placed in a container suitable for catching the media. Ensure Operator is prepared for strong recoil, the blast hose will provide strong recoil as the media exits the blast hose. Activate Remote Control System per Operator's Manual. When Blast Pot is empty, only air will exit the blast hose. Deactivate the Remote Control System to depressurize the Blast Pot. Place Metering Valve (3) in the CLOSED position.
- Inspect Blast Pot components for damage. Replace damaged components before use.
- Cover Blast Pot when not in use to reduce debris and water intrusion.

Troubleshooting

If the Blast Pot does not function properly, check the following:

SYMPTOM (Cause)	**ACTION**
Blast Pot will not pressurize (Damaged components, improper air supply, Remote Control System malfunctions)	Refer to Remote Control System Operator's Manual. Insufficient air supply. Ensure minimum of 50 psi is supplied to Blast Pot and sufficient air volume to support blast nozzle. Ensure internal piping is aligned with Fill Hole. Ensure Pop Up Valve and Pop Up Valve Seat are seating without air leaks. Replace damaged components.
Blast Pot will not depressurize or depressurizes slowly (Damaged components)	Refer to Remote Control System Operator's Manual. Refer to Muffler Operator's Manual.
No air and/or media exits the blast nozzle (Blockages, Metering Valve)	Depressurize Blast Pot. Inspect nozzle and blast hose for blockage. Remove blockage or remove components from use. Pressurize Blast Pot and open and close Choke Valve rapidly. If problem persists refer to Metering Valve Operator's Manual.
Intermittent media flow (Wet media, Metering Valve, Blast Nozzle)	Damp or wet media. Remove media from Blast Pot by cleaning out the vessel. Ensure dry media is used. Install a Moisture Separator at the inlet of the Blast Pot. Increase the inner diameter of Air Supply hose. Blast Nozzle is worn or too large for compressor size. Replace Blast Nozzle.

6.0 Cubic Foot C-Series Blast Pot

Figure 3

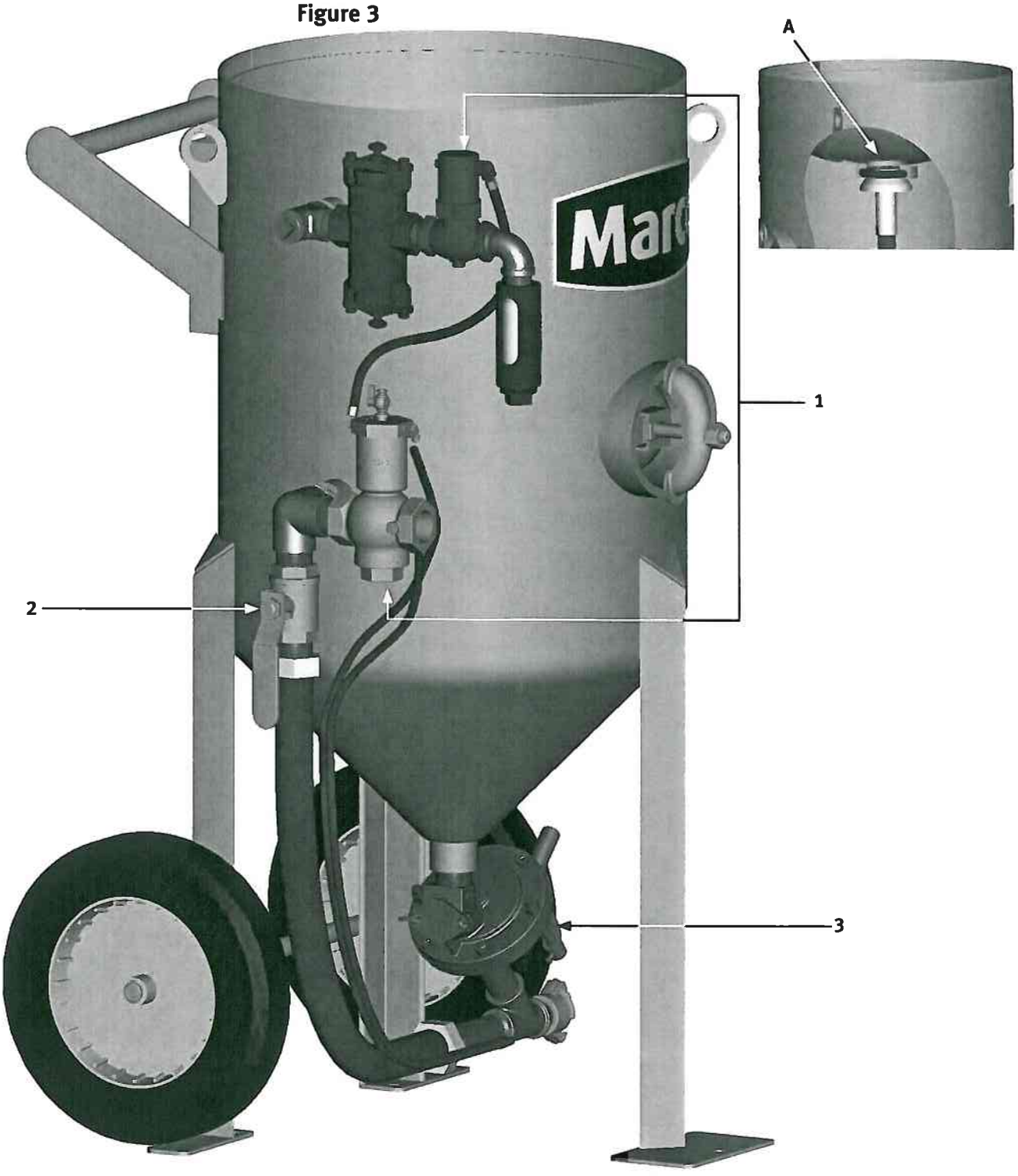

⚠ WARNING

Always depressurize the entire blasting system, disconnect all electrical power sources and lockout/tagout all components before any maintenance or troubleshooting is attempted. Failure to comply with the above warning could cause electrical shock and inadvertent activation of equipment resulting in death or serious injury.

⚠ WARNING

Never weld, grind or drill on the Blast Pot (or any pressure vessel). Doing so will void ASME certification and manufacturer's warranty. Welding, grinding or drilling on the Blast Pot (or any pressure vessel) could weaken the vessel causing it to burst. Failure to comply with the above warning could result in death or serious injury. (ASME Pressure Vessel Code, Section VIII, Division 1)

NOTICE

Piping may loosen during transit. Ensure all internal and external piping is aligned and tightened before use. Ensure Pop-up Valve will seal properly with Pop-up Valve Seat at opening in top of Blast Pot.

6.0 Cubic Foot C-Series Blast Pot

Maintenance

Maintenance of the Blast Pot is limited to the daily cleaning and the immediate replacement of damaged or worn parts.

6.0 Cubic Foot C-Series Blast Pot

Disassembly:

Inspection Door Assembly: Fig. 4

1) Unthread Nut (1) from Bolt (3).
2) Remove Yoke (2) from Bolt (3).
3) With Bolt (3) captured in slot in Door (5), grasp Bolt (3) and push on Door (5) towards the interior of Blast Pot to free the Door (5) and Gasket (4).
4) Remove Door (5) from Blast Pot interior.

Pop-Up Valve: Fig. 5

1) Remove Inspection Door Assembly (1).
2) Unthread Vertical Pipe (4) from Pipe Elbow (5). Remove Vertical Pipe (4) and Pop-Up Valve (3) from the Blast Pot through Inspection Door opening.
3) Remove Pop-Up Valve (3) from pipe.

Pop-Up Valve Seat: Fig. 5

1) Pry Pop-Up Valve Seat (2) from recess below the fill hole (A) in top of Blast Pot and remove through fill hole (A).

Assembly:

Pop-Up Valve Seat: Fig. 5

1) Insert the Pop-Up Valve Seat (2) in the recess below the fill hole (A). Ensure Pop-Up Valve Seat (2) is completely seated in recess.

Pop-Up Valve: Fig. 5

1) Inspect Horizontal Pipe (6) and Pipe Elbow (5) for damage. Replace if damaged.
2) Insert Pop-Up Valve (3) on non-threaded end of Vertical Pipe (4).
3) Place Pop-Up Valve (3) and Vertical Pipe (4) in Blast Pot and thread in to Pipe Elbow (5).
4) Ensure Vertical Pipe (4) is perpendicular to Horizontal Pipe (6). Slide Pop-Up Valve (3) up and down to ensure freedom of movement and properly seats against Pop-Up Valve Seat (2).
5) Tighten Vertical Pipe (4) 1/4 turn beyond hand tight.

Inspection Door Assembly: Fig. 4

1) Ensure Door (5) is free of debris. Place Gasket (4) on Door (5) and insert through opening in side of Blast Pot.
2) Place head of Bolt (3) in slot on Door (5). Grasp Bolt (3) and seat Door (5) and Gasket (4) on interior ring of opening. Ensure Gasket (4) creates positive seal.
3) Place Yoke (2) on Bolt (3) and tighten Nut (1). Ensure Yoke (2) is tight and an air-tight seal is produced.

6.0 Cubic Foot C-Series Blast Pot

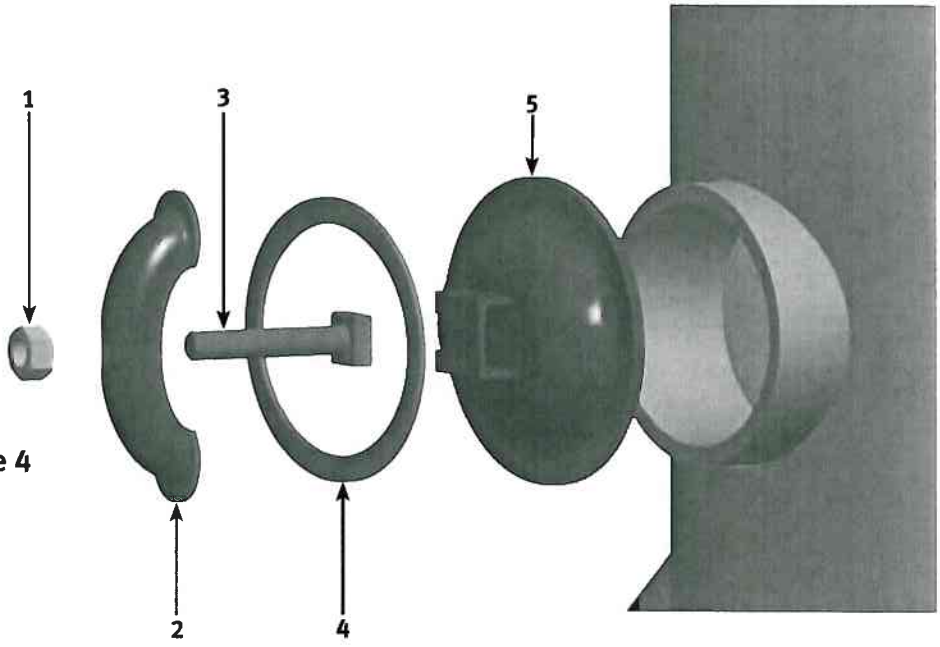

Figure 4

Figure 5

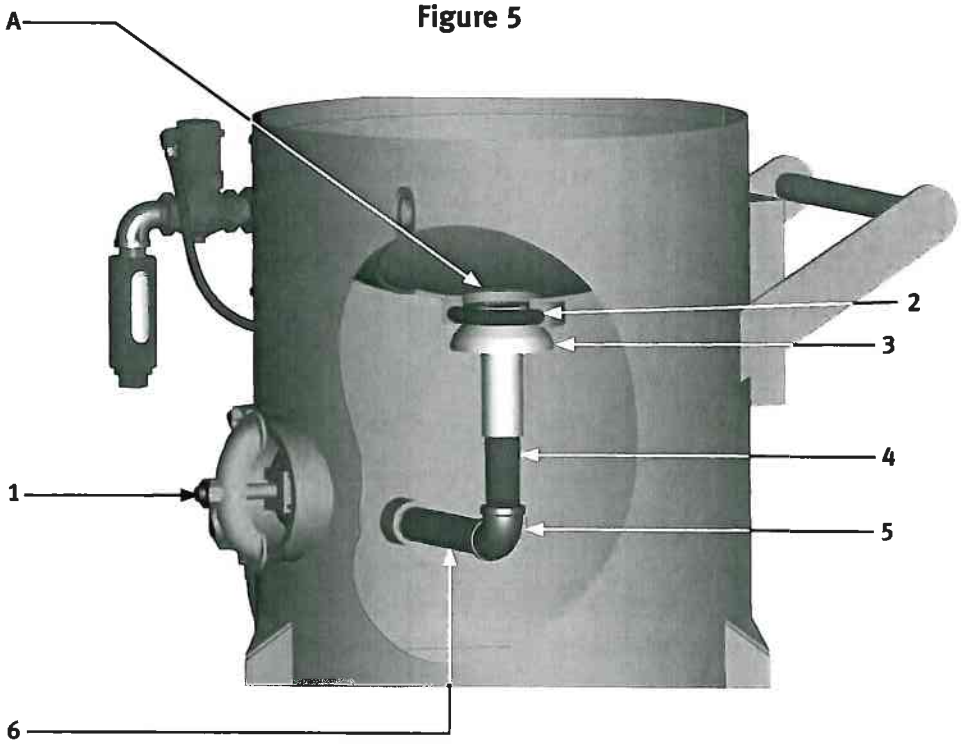

6.0 Cubic Foot C-Series Blast Pot Schematic

Figure 6

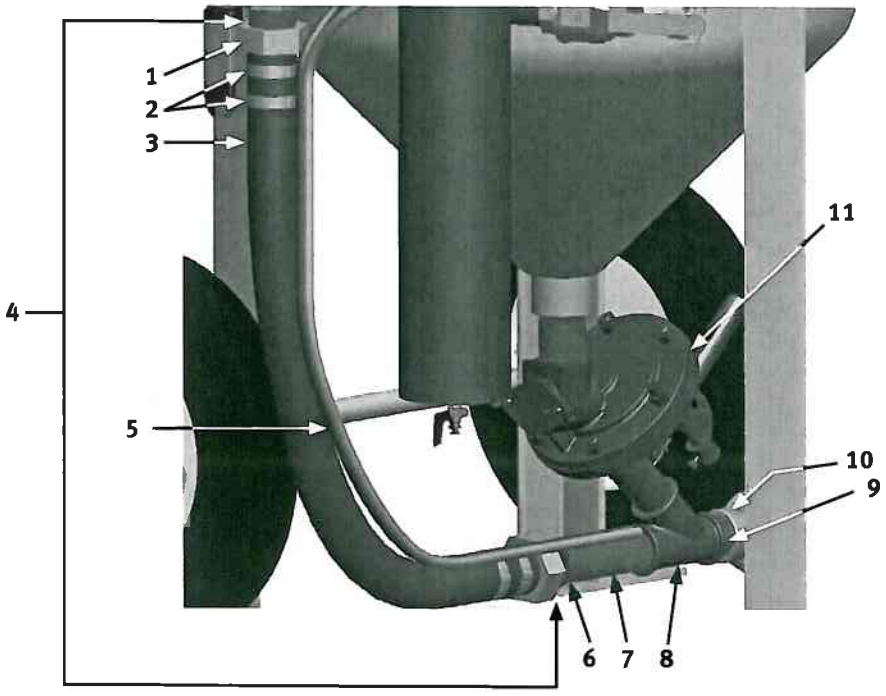

Item #	Part #	Description
Fig. 6		
1	10SFE4*	Swivel Air Hose End - 1-1/2" NPT (*2 required*)
2	1015503*	Screw Type Hose Clamp (*4 required*)
3	10AH112B*	Air Hose - 1-1/2" i.d. (per foot) - (three feet required)
4	1006312	1-1/2" i.d. Pusher Line Service Kit *(Includes 1, 2, 3)*
5	10TL5	5' of Coupled Twinline
6	1011501	1-1/2" x 1-1/4" Bushing
7	1011202	1-1/4" X 6" Nipple
8	1014024	1-1/4" "Y" Fitting
9	1011201	1-1/4" NPT Close Nipple
10	10SB1	1-1/4" NPT Brass Tank Coupling
11	1014000	Regulator Metering Valve - Complete

* - Items included in Pusher Line Service Kit

6.0 Cubic Foot C-Series Blast Pot Schematic

Figure 7

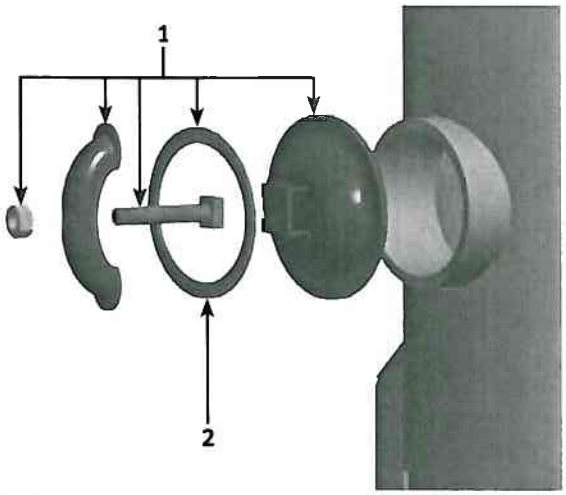

Item #	Part #	Description
Fig.7		
1	1006200	6" x 8" Inspection Door Assembly (Includes: Door, Bolt, Gasket, Yoke and Nut)
2	1006201	6" x 8" Inspection Door Gasket

Figure 8

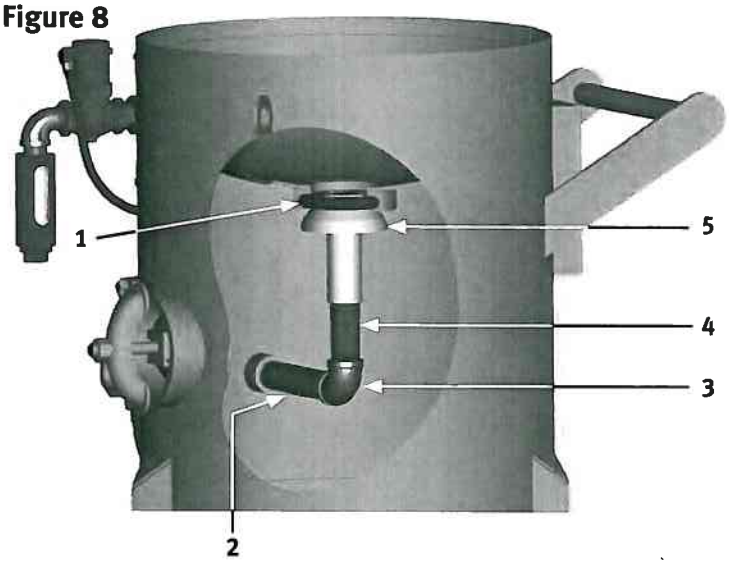

Item #	Part #	Description
Fig. 8		
1	1006050	Pop-Up Valve Seat
2	1011214	1-1/4" NPT x 10" Pipe Nipple
3	1006204	1-1/4" 90 Degree Elbow
4	1006208	1-1/4" NPT x 5-1/2" Pipe Nipple
5	1006020	Pop-Up Valve - External Sleeve

6.0 Cubic Foot C-Series Blast Pot Schematic - Pneumatic Controls

Item #	Part #	Description
Fig. 9		
-	1060303	6.0 Cu. Ft. C-Series Blast Pot w/Regulator Metering, KwikFire 125 Pneumatic Remote Control System, KwikFire 150 Control Handle and 50 feet of Pneumatic Control Line
-	1060303PKA	6.0 Cu. Ft. C-Series Blast Pot w/Regulator Metering, KwikFire 125 Pneumatic Remote Control System, KwikFire 150 Control Handle, 50 feet of Pneumatic Control Line, and The Extractor Moisture Separator.
1	1012151	1" NPT Close Pipe Nipple
2	1011816	1" NPT Pipe Tee
3	1011901	1" NPT Square Head Pipe Plug
4	1012151	1" NPT Close Nipple
5	1012000	1" Abrasive Trap - Complete
6	10CL18	18" Control Line
7	1011201	1-1/4" NPT Close Nipple
8	1011501	1-1/2" (M) x 1-1/4" (F) NPT Bushing
9	1014015	1-1/2" NPT Close Nipple
10	1011804	1-1/2" 90 Degree Elbow with Side-Out
11	1011603	1-1/2" Full Port Brass Ball Valve
12*	10101313	The Extractor Moisture Separator *(Includes 9, 11, 12, 19, 21, 22) (optional)*
13	10TL5	5' of Coupled Twinline
14	1006312	1-1/2" Pusher Line Service Kit *(see Fig. 6)*
15	1006064	Wheel (*2 required*)
16	1006205	Wheel Clip (*4 required*)
17	1011202	1-1/4" x 6" NPT Pipe Nipple
18	10SB1	1-1/4" Tank Coupling
19*	1012101	1/4" Brass Petcock (*optional*)
20	1014000	Regulator Valve - Complete
21*	10ME4	4-lug Air Hose Coupling - 1-1/2" NPT (F) (*optional*)
22*	1011839	1-1/2" NPT Street Elbow (*optional*)
23	1012200	1-1/2" Inlet Valve - Complete
24	1011100	Muffler Assembly (*includes 1" NPT Close Nipple*)
25	1011801	1" NPT Street Elbow
26	1012050	1" Outlet Valve - Complete
27*	1006102	Screen for 24" Diameter Blast Pot (*optional*)
28*	1006101	Lid for 24" Diameter Blast Pot (*optional*)
–	1090072	6.0 Cubic Foot C-Series Blast Pot with KwikFire 125 Remote Control System Operator's Manual
–	1090014	KwikFire 125 Pneumatic Remote Control System Operator's Manual
–	1091045	Warning Tag

NOTE: all items marked with an asterisks (*) are optional or part of a package. Please consult with your Marco representative to confirm availability.

6.0 Cubic Foot C-Series Blast Pot Schematic - Pneumatic Controls

Figure 9

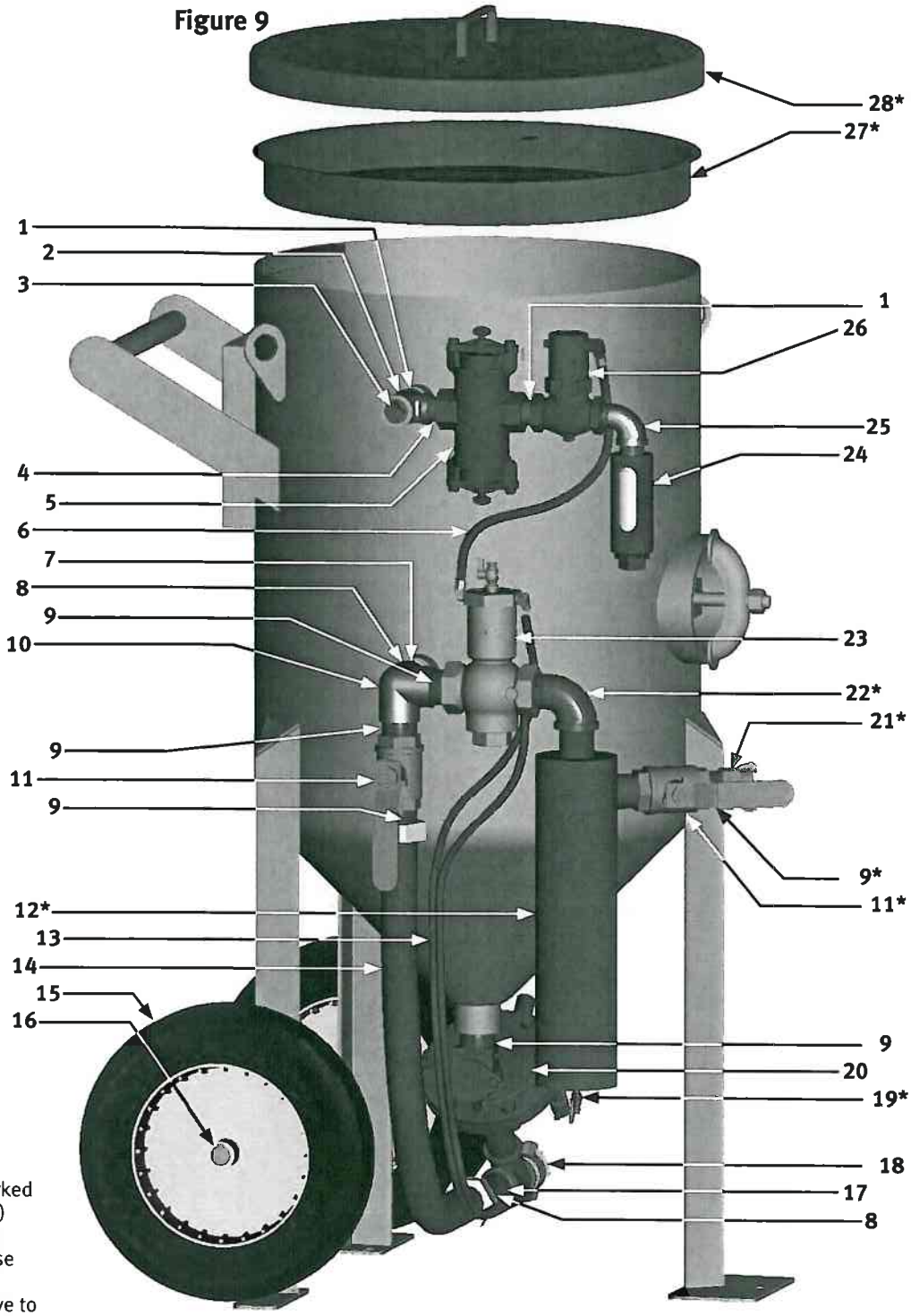

NOTE: all items marked with an asterisks (*) are optional or part of a package. Please consult with your Marco representative to confirm availability.

6.0 Cubic Foot C-Series Blast Pot Schematic - Electric Controls

Item #	Part #	Description
Fig. 10		
-	1060301	6.0 Cu. Ft. C-Series Blast Pot w/Regulator Metering Valve, KwikFire 125 Remote Control System, 12 VDC KwikFire 190 Electric Remote Control System, KwikFire 156 Control Handle and 50 feet of Electric Control Line
-	1060301PKA	6.0 Cu. Ft. C-Series Blast Pot w/Regulator Metering Valve, KwikFire 125 Remote Control System, 12 VDC KwikFire 190 Electric Remote Control System, KwikFire 156 Control Handle, 50 feet of Electric Control Line, and The Extractor Moisture Separator
-	1060302	6.0 Cu. Ft. C-Series Blast Pot w/Regulator Metering Valve, KwikFire 125 Remote Control System, 120 VAC KwikFire 190 Electric Remote Control System, KwikFire 156 Control Handle and 50 feet of Electric Control Line
-	1060302PKA	6.0 Cu. Ft. C-Series Blast Pot w/Regulator Metering Valve, KwikFire 125 Remote Control System, 120 VAC KwikFire 190 Electric Remote Control System, KwikFire 156 Control Handle, 50 feet of Electric Control Line, and The Extractor Moisture Separator
1	1012151	1" NPT Close Nipple
2	1011816	1" NPT Pipe Tee
3	1011901	1" NPT Square Head Pipe Plug
4	1012151	1" NPT Close Nipple
5	1012000	1" Abrasive Trap - Complete
6	1014015	1-1/2" NPT Close Nipple
7	1011201	1-1/4" NPT Close Nipple
8	1011501	1-1/2" X 1-1/4" NPT Bushing
9	1011804	1-1/2" 90 Degree Elbow with Side-Out
10	-	KwikFire 190 - Complete (*see Operator's Manual 1090051 for options*)
11	10AH025	1/4" Push On Air Hose
12	1011603	1-1/2" Full Port Ball Valve
13	1006312	1-1/2" Pusher Line Service Kit *(see Fig. 6)*
14	1006064	Wheel (*2 required*)
15	1006205	Wheel Clip (*4 required*)
16	10SB1	1-1/4" Tank Coupling
17*	1012101	1/4" NPT Brass Petcock (*optional*)
18	1014000	Regulator Valve - Complete
19*	10101313	The Extractor Moisture Separator *(includes 6, 12, 17, 19, 20, 21) (optional)*
20*	10ME4	4-lug Air Hose Coupling - 1-1/2" NPT (F) (*optional*)
21*	1011802	1-1/4" NPT Street Elbow (*optional*)
22	1012200	1-1/2" Inlet Valve - Complete
23	1011100	Muffler Assembly (*includes 1" NPT Close Nipple*)
24	1011801	1" NPT Street Elbow
25	10CL18	18" control Line
26	1012050	1" Outlet Valve - Complete
27*	1006102	Screen for 24" Diameter Blast Pot (*optional*)
28*	1006101	Lid for 24" Diameter Blast Pot (*optional*)
29*	-	16/2 Power Cord with Twist-Lock Plug (*see Operator's Manual 1090051 for options*)
30*	1015546	KwikFire 190 12 VDC Power Supply Cord (used with 1065301 and 1065301PKA blast pot configurations)
31*	1015600	KwikFire 156 Electric Control Handle
32*	1030020	Galaxy 300 120 VAC to 12 VAC Power Convertor (used with 1065302 and 1065302PKA blast pot configurations)
–	1090072	6.0 Cubic Foot C-Series Blast Pot with KwikFire 125 Remote Control System Operator's Manual
–	1090051	KwikFire 190 Electric Remote control System Operator's Manual
–	1090014	KwikFire 125 Pneumatic Remote Control System Operator's Manual
–	1091045	Warning Tag

NOTE: all items marked with an asterisks (*) are optional or part of a package. Please consult with your Marco representative to confirm availability.

6.0 Cubic Foot C-Series Blast Pot Schematic - Electric Controls

Figure 10

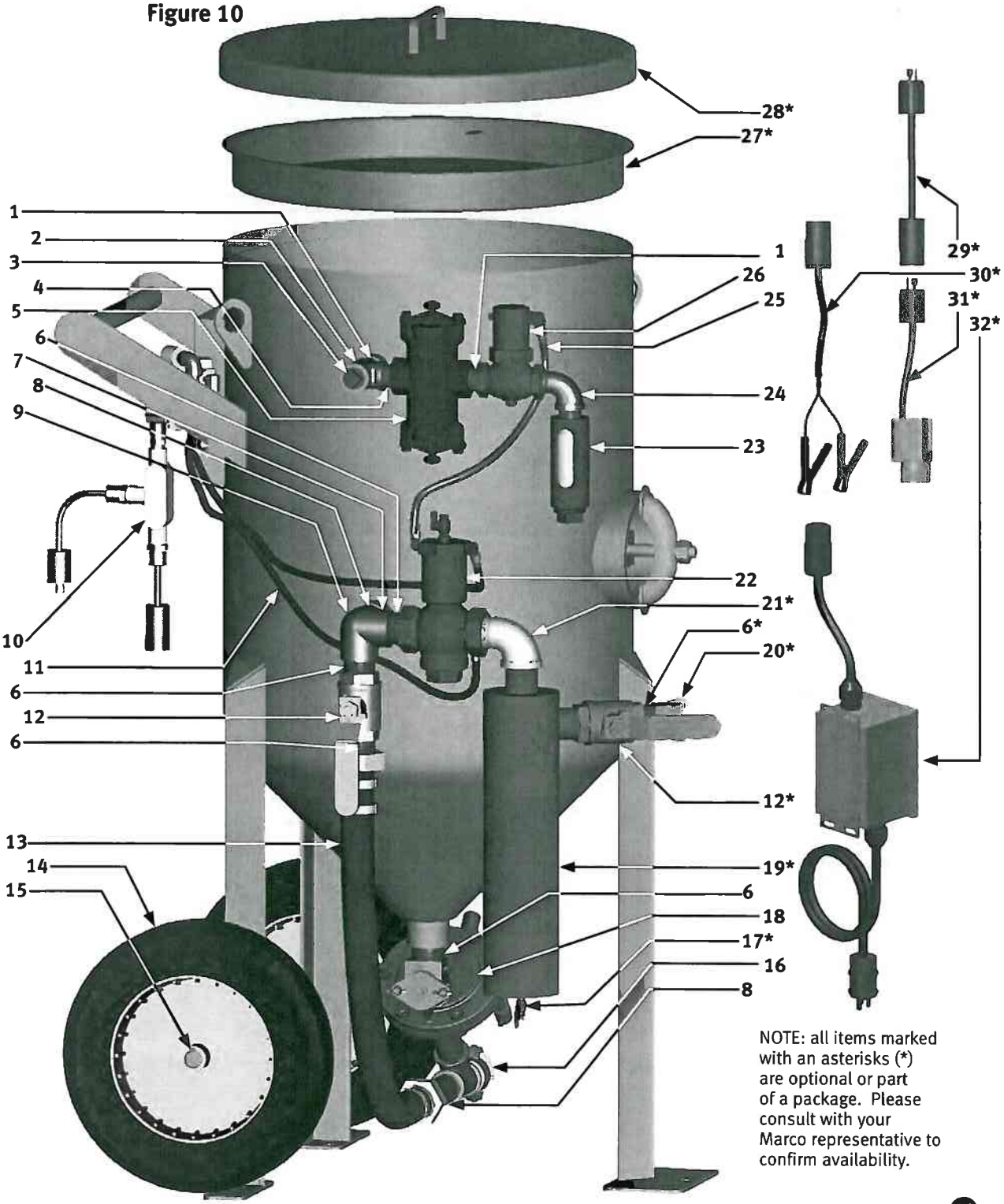

NOTE: all items marked with an asterisks (*) are optional or part of a package. Please consult with your Marco representative to confirm availability.

6.0 Cubic Foot C-Series Blast Pot

Maintenance Notes

DATE	TYPE OF SERVICE	PART NUMBER

ADDITIONAL TECHNICAL DATA

The associations listed below offer information, materials and videos pertaining to media blasting and safe operating practices.

- **American Society for Testing and Materials (ASTM)**
  100 Barr Harbor Drive
  West Conshohocken, PA 19428-2959
  Phone: (610) 832-9585
  FAX: (610) 832-9555
  www.astm.org

- **Occupational Safety & Health Administration (OSHA)**
  United States Department of Labor
  200 Constitution Avenue
  Washington, DC 20210
  Phone: (800) 321-OSHA
  (800) 321-6742
  www.osha.gov

- **The National Board of Boiler & Pressure Vessel Inspectors**
  1055 Crupper Avenue
  Columbus, Ohio 43229
  Phone: (614) 888-8320
  FAX: (614) 888-0750
  www.nationalboard.org

- **National Association of Corrosion Engineers (NACE)**
  1440 South Creek Drive
  Houston, TX 77084-4906
  Phone: (281) 228-6200
  FAX: (281) 228-6300
  www.nace.org

- **The Society for Protective Coatings (SSPC)**
  40-24th Street, 6th Floor
  Pittsburgh, PA 15222-4656
  Phone: (412) 281-2331
  FAX: (412) 281-9992
  www.sspc.org

WARRANTY

Seller warrants to the original purchaser that the Product covered by this Warranty will remain free from defects in workmanship or material under normal commercial use and service for a period of one year from the date of shipment to the original Purchaser. This Warranty shall not apply to defects arising, in whole or in part, from any accident, negligence, alteration, misuse or abuse of the Product, operation not in accordance with applicable instructions or manuals or under conditions more severe than, or otherwise exceeding, those set forth in the written specifications for the Product, nor shall this Warranty extend to repairs or alterations of the Product by persons other than Seller or Seller's authorized representatives, or to maintenance parts.

DISCLAIMER OF WARRANTY

The foregoing Warranty is exclusive and is in lieu of all other warranties of quality, whether oral or written and whether express or implied. All warranties of merchantability or fitness for a particular purpose are hereby excluded and are inapplicable to the Product. Seller makes no warranties or representations concerning respirators, or equipment made by other manufacturers.

EXCLUSIVE REMEDIES FOR WARRANTY CLAIMS

THE SOLE AND EXCLUSIVE REMEDIES OF PURCHASER FOR UNDER THE FOREGOING WARRANTY COVERING THIS PRODUCT SHALL BE REPAIR OR REPLACEMENT, FREE OF CHARGE, F.O.B. POINT OF MANUFACTURE, OF ANY DEFECTIVE PART OR PARTS OF THE PRODUCT THAT WERE MANUFACTURED BY SELLER, AND WHICH ARE RETURNED TO SELLER AT SELLER'S PRINCIPAL PLACE OF BUSINESS, POSTAGE PREPAID. THIS SOLE AND EXCLUSIVE REMEDY IS CONDITIONED UPON PURCHASER'S PROMPT WRITTEN NOTICE TO SELLER AT SELLER'S PLACE OF BUSINESS THAT A DEFECT HAS BEEN DISCOVERED, TOGETHER WITH A REASONABLY DETAILED DESCRIPTION OF THE DEFECT IN THE PRODUCT, WITHIN THIRTY (30) DAYS AFTER DISCOVERY OF THE DEFECT, OTHERWISE SUCH CLAIMS SHALL BE DEEMED WAIVED. NO ALLOWANCE WILL BE GRANTED FOR ANY REPAIRS OR ALTERATIONS MADE BY PURCHASER OR OTHERS WITHOUT SELLER'S PRIOR WRITTEN CONSENT. IF SUCH NOTICE IS TIMELY GIVEN, SELLER WILL HAVE THE OPTION TO EITHER MODIFY THE PRODUCT OR COMPONENT PART THEREOF TO CORRECT THE DEFECT, REPLACE THE PRODUCT OR PART WITH COMPLYING PRODUCTS OR PARTS, OR REFUND THE AMOUNT PAID FOR THE DEFECTIVE PRODUCT, ANY ONE OF WHICH WILL CONSTITUTE THE SOLE LIABILITY OF SELLER AND FULL SETTLEMENT OF ALL CLAIMS. PURCHASER SHALL AFFORD SELLER PROMPT AND REASONABLE OPPORTUNITY TO INSPECT THE PRODUCT FOR WHICH CLAIM IS MADE. THE SOLE PURPOSE OF THE FOREGOING STIPULATED EXCLUSIVE REMEDY SHALL BE TO REPAIR OR REPLACE DEFECTIVE PRODUCTS OR COMPONENTS THEREOF, OR TO REFUND PURCHASER THE PURCHASE PRICE THEREOF. THIS STIPULATED EXCLUSIVE REMEDY SHALL NOT BE DEEMED TO HAVE FAILED OF ITS ESSENTIAL PURPOSE SO LONG AS SELLER IS WILLING AND ABLE TO REPAIR OR REPLACE THE DEFECTIVE PARTS OR REFUND THE PURCHASE PRICE IN ACCORDANCE WITH THE TERMS HEREOF.

LIMITATION OF REMEDIES

The foregoing stipulated exclusive remedies is in lieu of all other remedies for breach of contract, warranty and/or tort. Seller shall not be liable for the Purchaser's expenses for downtime or for making up downtime, damages for which the Purchaser may be liable to other persons and/or entities, damages to property, and injury to or death of any persons and/or any claims for incidental or consequential damages, including but not limited to loss of profits, regardless of whether Seller has been informed of the possibility of such damages. Seller neither assumes nor authorizes any person to assume for it any other liability in connection with the sale or use of any Products covered by the foregoing Warranty and Disclaimers, and there are no oral agreements relating to remedies which are collateral to or which affect this limitation.

Marco Blast Machine – Hose Configuration

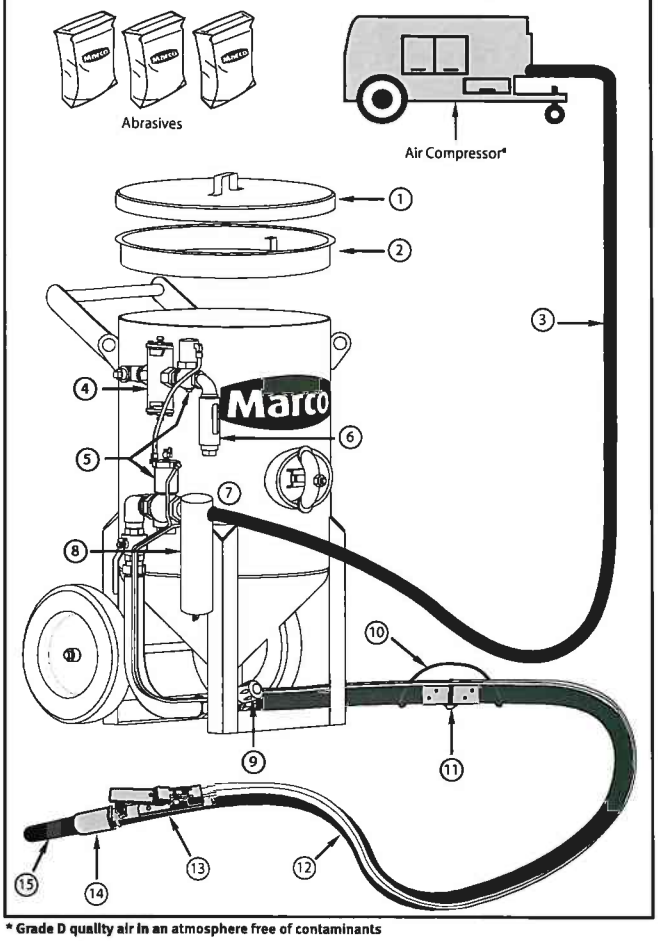

* Grade D quality air in an atmosphere free of contaminants

Ambient Air Pump Configuration

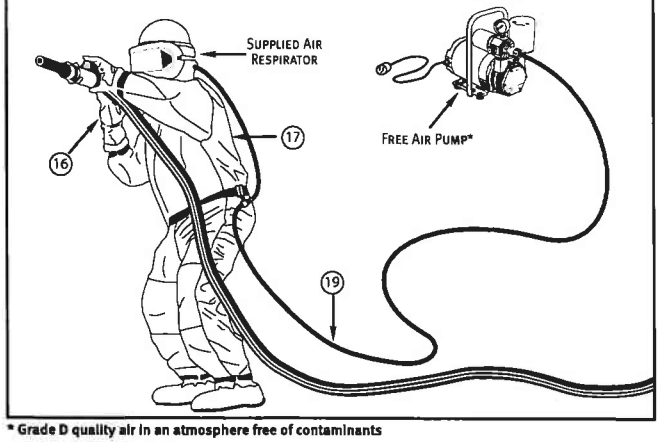

* Grade D quality air in an atmosphere free of contaminants

Air Compressor Breathing Air Configuration

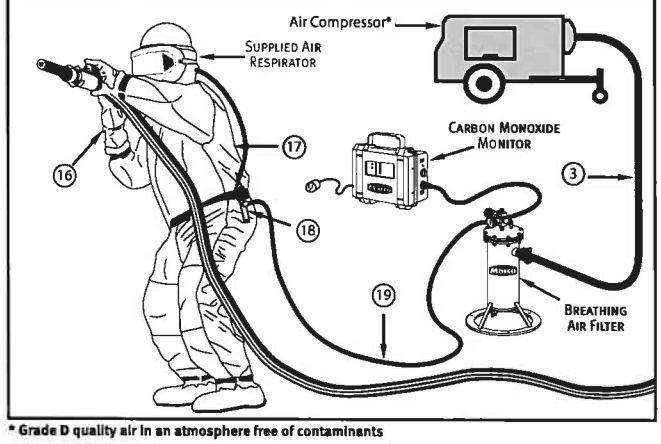

* Grade D quality air in an atmosphere free of contaminants

DAILY PRE-OPERATION CHECKLIST

Additional Components

1. blast pot lid
2. blast pot screen
3. air hose
4. abrasive trap
5. remote control system
6. exhaust muffler
7. air hose couplings & gaskets
8. moisture separator
9. metering valve
10. whip check cable
11. blast hose couplings & gaskets
12. remote control line
13. remote control handle
14. blasting nozzle holder
15. blasting nozzle
16. blasting gloves
17. media resistant blast suit
18. breathing line
19. climate control device

Marco

Phone: (800) 252-7848
Fax: (563) 324-6258
e-mail: sales@marcousa.com
www.marcousa.com

☐ MEDIAS:

- Review the Media MSDS *(Material Safety Data Sheet)* to ensure the material is free of toxic or harmful substances such as lead, silica, cyanide or arsenic. Use properly sized media to ensure required surface finish.

☐ BLAST POT:

- Inspect the Blast Pot for internal and external wear, abrasions and leaks.
- Ground the Blast Pot to dissipate static electricity created by the Media moving through the Blast Hose.
- Install a Moisture Separator at the Inlet Port of the Blast Pot. Removing moisture from the Air Supply will allow Media to flow smoothly from the Blast Pot to the work surface.
- Inspect abrasive trap filter and empty trap frequently
- Inspect exhaust muffler and filter element before starting blasting operations. Replace filter element if exhaust air flow is restricted by residual dust

☐ AIR SUPPLY: Respirator

- Inspect Respirator Assemblies for worn components and replace as needed.
- You MUST consult the Operator's Manual supplied with your Respirator for ALL applicable Warnings and Hazards.

☐ BLAST NOZZLES:

- Replace Blast Nozzles if liner or jacket is cracked, damaged or an orifice size 1/16" larger than the original size.
  – Determine Nozzle wear by inserting a drill bit 1/16" larger than original size of the Nozzle orifice. If the drill bit passes, replacement is needed.
- Blast Nozzles with ½" I.D. or 1" I.D. Entry require use of a Nozzle Washer. Wide Entry (1-1/4" I.D.) Blast nozzles do not require a Nozzle Washer. Inspect and replace damaged Nozzle Holder or Nozzle Washer before use.

☐ AIR SUPPLY: Blast Pot

- Use an Air Compressor that will provide sufficient CFM *(Cubic Feet Per Minute)* volume of air to the Blast Nozzle and all other pneumatic tools, with an additional 50% to allow for Nozzle wear.

☐ AIR & BLAST HOSE:

- Inspect all Hoses for internal and external wear, abrasions and leaks.
- Lay out Air Hose and Blast Hose as straight as possible to remove restrictions which cause reduced performance and premature wear.
- Blast Hose I.D. should be 3-4 times the size of Nozzle orifice.
- Blast Hose and Air Hose Couplings are to mate securely using Gaskets to provide a positive seal without leaks. Inspect and replace any worn or damaged component before use.
- Install Safety Clips and Safety Cables at each connection.

☐ PROTECTIVE CLOTHING:

- Wear appropriate Protective Clothing and Equipment *(supplied-air respirator, blast suit, safety shoes, leather gloves, ear protection and eye protection)* appropriate for the work environment.

MINERALS RESEARCH & RECOVERY, INC.

MATERIAL SAFETY DATA SHEET

PRODUCT: SHARPSHOT® Abrasives

Section 1: GENERAL INFORMATION

Manufacturer: Minerals Research & Recovery, Inc.
4620 South Coach Drive
Tucson, Arizona 85714

Creation Date: 10/90
Revision Date: 03/12

For Additional Information, Contact:
Minerals Research & Recovery, Inc.
(520) 748-9362 Phone
(520) 748-9364 Fax

-

Section 2: CHEMICAL INGREDIENTS

Composition: 100% Copper Slag (Complex silicates and oxides of iron, silica, calcium, and aluminum)

Component	CAS #	Typical % Weight	Fed OSHA PEL (mg/m^3)	CA OSHA PEL (mg/m^3)	ACGIH TLV (mg/m^3)
Iron (Fe)	1309-37-1	30-35	10	5	5
Silicates (amorph. SiO_2)	7440-21-3	35-45	1.8	6 (resp = 3)	10
Alpha-Alumina (Al_2O_3)	1344-28-1	5-15	15 (resp =5)	10 (resp = 5)	1 (resp)
Calcium oxide (CaO)	1305-78-8	0-10	5	2	2
Magnesium oxide (MgO)	1309-48-4	<1	15	10	10

Please note that this product may contain the following chemical components in quantities less than 1% by weight. Under extreme conditions (e.g. sandblasting in a confined space without sufficient ventilation), OSHA PELs or ACGIH TLV's could be exceeded. In these situations, employee exposure monitoring should be performed to determine exposure levels. You can contact us for further information.

Component	CAS #	Typical % Weight	Fed OSHA PEL (mg/m^3)	CA OSHA PEL (mg/m^3)	ACGIH TLV (mg/m^3)
Arsenic (As)	7440-38-2	<0.001	0.01	0.01	0.01
Cobalt (Co)	7440-48-4	<0.003	0.1	0.02	0.02
Copper (Cu)	7440-50-8	<0.25	1	0.1	1
Lead (Pb)	7439-92-11	<0.003	0.05	0.05	0.05
Vanadium (Vn)	1314-62-1	<0.001	0.5 (resp)	0.05 (resp)	0.05 (resp)
Crystalline Silica (SiO_2)	480-86-07	<0.1	14.2 (resp = 4.7)	0.3 (resp = 0.1)	0.05 (resp)

Footnotes:

(1) See last page for important additional terms and conditions including disclaimer of warranties.

(2) Concentration may vary somewhat between batches or lots. Where possible, a concentration range is indicated. Occasionally, however, levels may even fall outside of the typical concentration range.

Section 3: PHYSICAL DATA

Physical State:	Granular	Bulk Density:	110 - 120 lbs/ft3
Specific Gravity:	3.4 - 3.6		
Appearance/ Odor:	Dull Black, Odorless	Vapor Pressure:	NA
Boiling Point:	NA	Vapor Density:	NA
Melting Point:	Over 2000° F	Evaporation Rate:	NA
pH:	NA		

Section 4: FIRE AND EXPLOSION HAZARD DATA

Flash Point:	NA	Lower Explosive Limit:	NA
Autoignition Temperature:	NA	Upper Explosive Limit:	NA
Fire Hazard:	NA	Explosion Hazard:	NA
Extinguishing Media:	NA	Special Fire Fighting Procedures:	NA
Unusual Fire and Explosion Hazards:	NA		

Section 5: REACTIVITY DATA

Stability:	Stable
Incompatibilities (Materials to Avoid):	Strong mineral acids
Hazardous Thermal Decomposition Products:	None Expected
Polymerization:	Will not occur

Section 6: HEALTH HAZARD DATA

Proper precautions should be taken to avoid any health hazard. A health hazard may occur if limits for air contaminants exceed PEL limits as per 29 CFR 1910.1000. Proper engineering controls and ventilation should be used to prevent air contaminants from exceeding PEL limits. NIOSH-approved respirators should be used during all abrasive blasting operations. (For

information on potentially hazardous elements refer to Section 2.)

Usual Route (s) of Entry: Inhalation of dust during handling or use
Medical Conditions Possibly Aggravated By Exposure: Chronic diseases or disorders of the respiratory system.

Section 7: FIRST AID AND MEDICAL EMERGENCY PROCEDURES

Eye Contact: Not anticipated to pose an acute or significant eye contact hazard. In the event of eye contact, flush eyes with generous amounts of water.
Skin Contact: Not anticipated to pose an acute or significant skin contact hazard. Wash with soap and water as needed to remove from skin
Inhalation: Not anticipated to pose an acute or significant inhalation hazard if proper work practices are employed to maintain dust exposure below OSHA PEL's. If overexposure occurs, remove individual to area with fresh air until symptoms cease.
Ingestion: Not considered to be an ingestion hazard.

Section 8: PRECAUTIONS FOR SAFE HANDLING AND USE

Procedures to Follow if Material is Released or Spilled: Using appropriate personnel protective equipment, material should be swept or vacuumed or otherwise collected into appropriate containers.

Waste Disposal Method(s): Landfill disposal or other methods that are in accordance with local, state and federal regulations. Virgin (unused and uncontaminated) material does not exceed the Toxicity Characteristic Leaching Procedure (TCLP) hazardous waste limits per 40 CFR 261.3. Used or contaminated material should be tested in accordance with 40 CFR 262.11 or any applicable local or state regulations to determine if it is a hazardous waste and disposed of accordingly.

Section 9: OCCUPATIONAL EXPOSURE CONTROL MEASURES

Engineering Controls (Ventilation, etc.) : Ventilation should be sufficient to maintain dust levels below applicable exposure limit.
Work Practices (Handling and Storage, etc.): Avoid creating airborne dust during handling and use.
Eye Protection: Safety glasses, goggles or face shields are recommended during abrasive blasting or when dust levels are excessive.
Skin Protection: Gloves and long-sleeved clothing are recommended during abrasive blasting or when dust levels are excessive.
Respiratory Protection: When engineering controls are not sufficient to lower dust levels below the applicable exposure limit, use a NIOSH-approved respirator. NIOSH-approved respirators should be used during all abrasive blasting operations in accordance with 29 CFR 1910.134 (OSHA Respiratory Protection Program).

ADDITIONAL MISCELLANEOUS INFORMATION

If material is being used for abrasive air blasting, proper protective clothing, eye protection and respiratory protection should be used in accordance with OSHA regulations. If air blasting is being performed in confined area, proper ventilation should be used in accordance with OSHA regulations.

Abbreviations:

NA = Not Applicable

DISCLAIMER OF EXPRESSED AND IMPLIED WARRANTIES

We believe that Minerals Research & Recovery's (MRR) copper slag products are not hazardous chemicals as defined by the U.S. Federal Occupational Safety and Health Hazard Communication Standard 29 CFR 1910.1200 (c). However, this should not be construed as a warranty that any MRR product is or is not a hazardous chemical under any applicable safety, or environmental statute, rule, or regulation. The use or application of any MRR product, whether or not used in conjunction with any other product, may result in the violation of safety or environmental statutes, rules or regulations as MRR has no control over how the MRR product is used, nor the possible contaminants that may exist on the surface to which it is applied. Therefore, there shall be no express or implied warranty that the spent MRR product conforms with applicable safety and/or environmental statutes, rules or regulation. All sales of this product are subject to MRR's. standard terms and conditions of sale. Further, MRR makes no warranties as to any of its products, express or implied, including the Implied Warranty of Merchantability, any implied warranty of fitness for a particular purpose or any implied warranties otherwise arising from course of dealing or trade.

By acceptance of any MRR product, the buyer thereof agrees that MRR's liability for any claim for damages, including, but not limited to, remediation or cleanup costs shall not exceed the value of the goods provided.

This information and product are furnished on the condition that the person receiving them shall make his own determination as to the suitability of the product for his particular purpose and on the condition that he assume the risk of his use thereof, including any environmental restrictions or prohibitions that may apply.

CALCOAST ANALYTICAL

Materials Chemistry

Accredited by
National Institute of Standards & Technology NVLAP

November 28, 1995

Certified by
California Department of Health Services
City of Los Angeles, Dept of Building & Safety

Minerals Reasearch & Recovery, Inc.
4620 South Coach Drive
Tucson, Arizona 85714

Attn: Mr. Stephen Mehlman

Ref: Lab File #1024-2A/95

1. SAMPLE:

One (1) bag of unused blasting material labelled *Sharpshot Abrasive*.

Rec'd: 10/24/95

2. ANALYSIS REQUIRED:

Analysis authorized by Naval Sea Systems Command; Ser 03R42/750

A. Determination of total metal content for compliance with MIL-A-22262B, paragraph 3.4.12

B. Determination of soluble metal content for compliance with MIL-A-22262B, paragraph 3.4.12

C. Determination of toxic metal content for compliance with MIL-A-22262B, paragraph 4.5.12.2

D. Determination of the free silica content for compliance with MIL-A-22262B, paragraph 3.4.7

E. Determination of conductivity for compliance with MIL-A-22262B, paragraph 3.4.10

3. METHODS OF ANALYSIS:

A. Total metals in accordance with MIL-A-22262B, paragraph 4.5.12.1

B. Soluble metals in accordance with MIL-A-22262B, paragraph 4.5.12.1

C. Toxic metals in accordance with MIL-A-22262B, paragraph 4.5.12.2

TELEPHONE (510) 652-2979
FAX (510) 652-3085

P.O. BOX 8702 • EMERYVILLE, CA 94662
4072 WATTS STREET • EMERYVILLE, CA 94608

3. METHODS OF ANALYSIS: (Continued)

D. Free silica was measured in accordance with ASTM D5381-93 as approved by the Department of the Navy, Naval Sea Systems Command, in their letter Ser 03R42/750 of October 23, 1995

E. Conductivity in accordance with MIL-A-22262B, paragraph 4.5.10

Metal measurements were performed using a Perken-Elmer Atomic Absorption Spectrometer - Model 3100, Ser. No. 148230

4. RESULTS:

A. No (0) metals were detected in excess of the regulatory limit for total metal content specified in MIL-C-24667A, paragraph 3.24.7

B. No (0) soluble metals were detected in excess of the regulatory limits specified in MIL-C-24667A, paragraph 3.24.7

C. No (0) toxic metals were detected in excess of the regulatory limits specified in MIL-C-24667A, paragraph 3.24.2

D. Free Silica

The submitted sample contains less than 1.0% free silica by weight.

This passes the regulatory maximum of 1.0% listed in MIL-A-22262B, paragraph 3.4.10

E. Conductivity

The submitted sample has a specific conductivity of 70 micromhos/cm which passes the regulatory maximum of 100 micromhos/cm listed in MIL-A-22262B, paragraph 3.4.10
(data sheets attached)

Ronald Shrewsbury
Analytical Chemist

RS:ns:clp:as

I certify that the tests described were performed by competent personnel using test facilities acceptable to the Government, and that the tests were conducted upon a representative portion of the supplied sample.

WILFRED C. BANAGAN
Witness Name

Signature

DATA SHEET

TOTAL METALS

SAMPLE ID: Minerals Research & Recovery; Sharpshot

ELEMENT	Totals (weight percent.)		PASS/FAIL
	MAXIMUM	SAMPLE	
Arsenic	0.05	0.0015	Pass
Antimony	0.05	0.00026	Pass
Barium	1.0	0.0017	Pass
Beryllium	0.0075	<0.00001 (ND)	Pass
Cadmium	0.01	0.000006	Pass
Chromium (III/VI)*	0.25/0.05	0.00006	Pass
Cobalt	0.80	0.00038	Pass
Copper	0.25	0.11	Pass
Lead	0.06	0.00035	Pass
Mercury	0.002	<0.0000001 (ND)	Pass
Molybdenum	0.35	<0.00001 (ND)	Pass
Nickel	0.20	0.00009	Pass
Selenium	0.01	< 0.00001 (ND)	Pass
Silver	0.05	0.0012	Pass
Thallium	0.07	<0.0001 (ND)	Pass
Vanadium	0.24	<0.00001 (ND)	Pass
Zinc	0.50	0.0013	Pass

Source: MIL-C-24667A, paragraph 3.24.7

* Reported as chromium III plus chromium VI

(ND) = None Detected

DATA SHEET

SOLUBLE METALS

SAMPLE ID: Minerals Research & Recovery; Sharpshot

ELEMENT	Soluble (mg/l) MAXIMUM	Soluble (mg/l) SAMPLE	PASS/FAIL
Arsenic	5	< 0.05 (ND)	Pass
Antimony	15	0.12	Pass
Barium	100	0.94	Pass
Beryllium	0.75	< 0.005 (ND)	Pass
Cadmium	1	0.065	Pass
Chromium (III/VI)*	560/5	0.31	Pass
Cobalt	80	0.47	Pass
Copper	25	11	Pass
Lead	5	0.83	Pass
Mercury	0.2	<0.001 (ND)	Pass
Molybdenum	350	<0.05 (ND)	Pass
Nickel	20	0.21	Pass
Selenium	1	<0.05 (ND)	Pass
Silver	5	< 0.05 (ND)	Pass
Thallium	7	< 0.05 (ND)	Pass
Vanadium	24	<0.05 (ND)	Pass
Zinc	250	0.94	Pass

Source: MIL-C-24667A, paragraph 3.24.7

* Reported as chromium III plus chromium VI

(ND) = None Detected

DATA SHEET

TOXIC METALS

SAMPLE: Minerals Research & Recovery; Sharpshot

ELEMENT	MAXIMUM (mg/L)	SAMPLE (mg/L)	PASS/FAIL
Arsenic	5.0	< 0.05 (ND)	Pass
Barium	100.0	0.31	Pass
Cadmium	1.0	< 0.05 (ND)	Pass
Chromium	5.0	< 0.05 (ND)	Pass
Lead	5.0	0.05	Pass
Mercury	0.20	< 0.001 (ND)	Pass
Selenium	1.0	< 0.05 (ND)	Pass
Silver	5.0	< 0.05 (ND)	Pass

Source: MIL-C- 24667A, paragraph 3.24.2

(ND) = None Detected

PAINT BOOTH HEATERS INFORMATION

Starting Serial Number: SKU-09001001

Mr. Heater

OPERATING INSTRUCTIONS AND OWNER'S MANUAL

Model #

MH50KR, MH75KTR, MH125KTR, MH175KTR, MH210KTR

READ INSTRUCTIONS CAREFULLY: Read and follow all instructions. Place instructions in a safe place for future reference. Do not allow anyone who has not read these instructions to assemble, light, adjust or operate the heater.

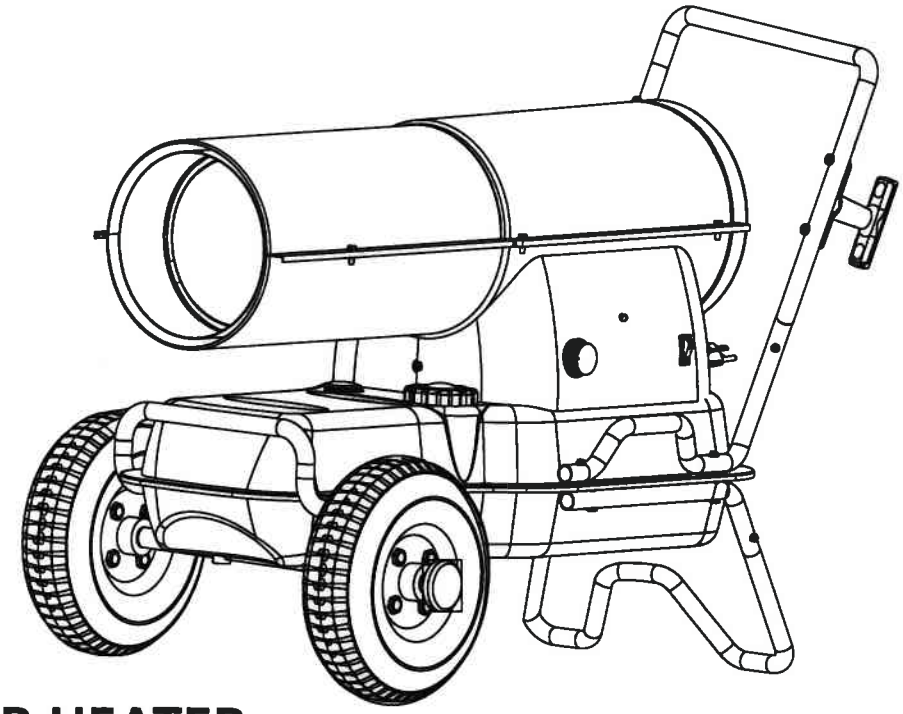

KEROSENE FORCED-AIR HEATER

⚠ **WARNING: If the information in this manual is not followed exactly, a fire or explosion may result causing property damage, personal injury or loss of life.**

— Do not store or use gasoline or other flammable vapors and liquids in the vicinity of this or any other appliance.
— Service must be performed by a qualified service agency.

This is an unvented portable heater. It uses air (oxygen) from the area in which it is used. Adequate combustion and ventilation air must be provided. Refer to page 3.

DESIGN CERTIFIED ® CSA CERTIFIED ®

UL-733, &CSA/CAN3-B140.9.3

WARNING:

⚠ YOUR SAFETY IS IMPORTANT TO YOU AND TO OTHERS, SO PLEASE READ THESE INSTRUCTIONS BEFORE YOU OPERATE THIS HEATER.

GENERAL HAZARD WARNING:

⚠ FAILURE TO COMPLY WITH THE PRECAUTIONS AND INSTRUCTIONS PROVIDED WITH THIS HEATER, CAN RESULT IN DEATH, SERIOUS BODILY INJURY AND PROPERTY LOSS OR DAMAGE FROM HAZARDS OF FIRE, EXPLOSION, BURN, ASPHYXIATION, CARBON MONOXIDE POISONING, AND/OR ELECTRICAL SHOCK.

⚠ ONLY PERSONS WHO CAN UNDERSTAND AND FOLLOW THE INSTRUCTIONS SHOULD USE OR SERVICE THIS HEATER.

⚠ IF YOU NEED ASSISTANCE OR HEATER INFORMATION SUCH AS AN INSTRUCTIONS MANUAL, LABELS, ETC. CONTACT THE MANUFACTURER.

WARNING:

⚠ **CARBON MONOXIDE CAN KILL YOU**

USING A PORTABLE GAS CAMPING HEATER INSIDE A TENT, RV, CAMPER, VEHICLE, SHELTER OR OTHER ENCLOSED AREAS CAN PRODUCE DEADLY CARBON MONOXIDE

WARNING:

⚠ NOT FOR HOME OR RECREATIONAL VEHICLE USE

WARNING:

⚠ FIRE, BURN, INHALATION, AND EXPLOSION HAZARD. KEEP SOLID COMBUSTIBLES, SUCH AS BUILDING MATERIALS, PAPER OR CARDBOARD, A SAFE DISTANCE AWAY FROM THE HEATER AS RECOMMENDED BY THE INSTRUCTIONS NEVER USE THE HEATER IN SPACES WHICH DO OR MAY CONTAIN VOLATILE OR AIRBORNE COMBUSTIBLES, OR PRODUCTS SUCH AS GASOLINE, SOLVENTS, PAINT THINNER, DUST PARTICLES OR UNKNOWN CHEMICALS.

WARNING:

⚠ **The State of California requires the following warning:**

COMBUSTION BY-PRODUCTS PRODUCED WHEN USING THIS PRODUCT CONTAIN CARBON MONOXIDE, A CHEMICAL KNOWN TO THE STATE OF CALIFORNIA TO CAUSE CANCER AND BIRTH DEFECTS (OR OTHER REPRODUCTIVE HARM).

⚠ WARNING:

- DO NOT USE GASOLINE, NAPHTHA OR VOLATILE FUELS.
- STOP HEATER BEFORE ADDING FUELS.
- ALWAYS FILL OUTDOORS AWAY FROM OPEN FLAME
- DO NOT USE EXTERNAL FUEL SOURCE.
- DO NOT OPERATE HEATER WHERE FLAMMABLE LIQUIDS OR VAPORS MAY BE PRESENT.
- DO NOT START HEATER WHEN CHAMBER IS HOT
- DO NOT START HEATER WHEN EXCESS FUEL HAS ACCUMULATED IN THE CHAMBER.
- DO NOT PLACE COOKING UTENSILS ON TOP OF THE HEATER.
- PLUG ELECTRICAL CORD INTO A PROPERLY GROUNDED THREE-PRONG RECEPTACLE.

⚠ MH50KR & MH75KTR WARNING:

Not suitable for use on wood floors or other combustible materials. When used the heater should rest on a suitable insulating material at least 1 inch thick and extending 3 feet or more beyond the heater in all directions.

CONTENTS

WARNINGS 2
HEATER SPECIFICATIONS 3
OPERATING PRECAUTIONS 3
SAFETY PRECAUTIONS 3
OPERATING INSTRUCTIONS 3
MAINTENANCE, STORAGE AND SERVICE 4
TROUBLE SHOOTING 6
WIRING DIAGRAM 7
PARTS LIST 8
EXPLODED VIEW 9
WARRANTY 10
INSTRUCTIONS FOR ORDERING PARTS 10

SPECIFICATIONS

CAUTION: CSA certified for use with only No. 1-K kerosene fuel.

Model	50KR	75KTR	125KTR	175KTR	210KTR
Burn Rate:	50,000 Btu/hr (14.7 kW)	75,000 Btu/hr (22 kW)	125,000 Btu/hr (37 kW)	175,000 Btu/hr (51 kW)	210,000 Btu/hr (61.5 kW)
Fuel Rate:	0.37 gal/hr (1.4 L/hr)	0.55 gal/hr (2.1 L/hr)	0.96 gal./hr (3.5 L/hr)	1.3 gal/hr (5.0 L/hr)	1.6 gal/hr (6.0 L/hr)
Electrical Input:	115V, 60Hz, 3.5a	115V, 60Hz, 4a	115V, 60Hz, 5.5a	115V, 60Hz, 5.5a	115V, 60Hz, 5.5a
Line Protection:	10 amps	10 amps	20 amps	20 amps	20 amps
Min. Operating Voltage:	110V	110V	110V	110V	110V
Pressure Setting:	3.5 psig (24 kPa)	4.2 psig (29 kPa)	5.5 psig (38 kPa)	5.8 psig (40 kPa)	8.5 psig (58.6 kPa)
Max. Outlet Temperature:	1450°F (787°C)	1450°F (787°C)	1450°F (787°C)	1450°F (787°C)	1450°F (787°C)
Fuel Tank Capacity:	4 gallons (15.1 L)	6 gallons (22.7 L)	8.45 gallons (32 L)	13.5 gallons (51 L)	13.5 gallons (51 L)
Ignition:	Direct Spark, Continuous	Direct Spark, Continuous	Direct Spark, Continuous	Direct Spark, Continuous	Direct Spark, Continuous
Spark Generator:	Igniter 13 kV, 10ma	Igniter 13 kV, 10ma	Igniter 13 kV, 10ma	Igniter 13 kV, 10ma	Igniter 13 kV, 10ma
Primary Safety Control:	Solid State Control	Solid State Control	Solid State Control	Solid State Control	Solid State Control
Certification:					

OPERATING PRECAUTIONS

This is a kerosene, direct-fired, forced air heater. It's intended use is primarily temporary heating of buildings under construction, alteration or repair.

Direct-Fired means that all of the combustion products enter the heated space. Even though this heater operates very close to 100 percent combustion efficiency, it still produces small amounts of carbon monoxide. Carbon monoxide (called CO) is toxic. CO can build up in a heated space and failure to provide adequate ventilation could result in death. The symptoms of inadequate ventilation are:

- headache
- dizziness
- burning eyes and nose
- nausea
- dry mouth or sore throat

Be sure to follow advice about ventilation in the Safety Precautions section.

Forced Air means that a blower or fan pushes the air through the heater. Proper combustion depends upon this air flow; therefore, the heater must not be revised, modified or operated with parts removed or missing. Likewise, safety systems must not be circumvented or modified in order to operate the heater.

When the heater is to be operated in the presence of other people the user is responsible for properly acquainting those present with the safety precautions and instructions, and of the hazards involved.

SAFETY PRECAUTIONS

1. Recommended for use with No.1-K kerosene fuel. Factory tested for use with No.2-K kerosene, No.1 or No.2 Diesel, No.1 or No.2 fuel oil or JP8 Jet A fuel and these fuels may be used as well. Never use gasoline, oil drained from crank cases, naphtha, paint thinners, alcohol or any other highly flammable fuels.
2. Check the heater thoroughly for damage. DO NOT operate a damaged heater.
3. DO NOT modify the heater or operate a heater which has been modified from its original condition.
4. For indoor use only. Not for use where exposed to weather.
5. Use in well ventilated areas, provide at least 2 sq. ft. (0.19 sq. m.) of opening near the floor and 2 sq. ft. (0.19 sq. m.) near the ceiling directly to outdoors. Increase air openings as marked for each additional heater.
6. Always keep combustibles, like paper and wood at least 8 ft. (2.4 m) from the heater outlet and 3 ft. (1.0 m) from the top, sides and inlet. Locate 10 ft. (3.0 m) from canvas or plastic coverings and secure them to prevent flapping movement.
7. Caution: Due to the high surface and exhaust temperatures, adults and children must observe clearances to avoid burns or clothing ignition. Do Not Touch. Keep children, clothing, and combustible away.
8. Install the heater such that it is not directly exposed to water spray, rain and / or water.
9. Never use in areas normally for habitation and /or where children may be present.
10. Operate only on a stable, level surface. (MH50KR & MH75KTR – See wood floor warning).
11. Do not use with duct work. Do not restrict inlet or exit.
12. Use only with electrical power specified. The electrical connection and grounding must comply with National Electrical Code – ANSI/NFPA 70 (USA) and CSA C22.1 Canadian Electrical Code, Part 1 (Canada).
13. Use only a properly grounded 3-prong receptacle or extension cord.
14. Do not move, handle, or service while hot or in operation.
15. Use only in accordance with local, state (provincial) or national requirements, ordinances and codes.

OPERATING INSTRUCTIONS

UNPACKING

1. Remove heater from carton.
2. Remove all protective material which may have been applied to the heater for shipment.
3. Check the heater for possible shipping damage. If any damage is found immediately contact the manufacturer at 800-251-0001.

ASSEMBLY (For 125,000, 175,000 and 210,000 BTU/hr models only, see figure 1, page 8.)

Wheels and handles are found in the shipping carton along with mounting hardware. The wheels, axle and mounting hardware are in a package. Tools required are a 5/16" nut driver, 3/8" open or adjustable wrench and standard pliers.

1. Assemble the wheels onto the wheel support as shown.
2. Install one of the cotter pins into the hole on one end of axle.

3. Slide the large washer, then wheel onto the axle next to the cotter pin.
4. Slide the spacer onto the axle next to the wheel.
5. Slide the partially assembled axle through the wheel support frame.
6. Slide the spacer onto the axle next to the wheel support.
7. Slide the wheel then large washer onto the axle and hold in place with the remaining cotter pin.
8. Install the caps over the larger washers to finish the wheel assembly.

PREPARING FOR OPERATION

1. Check the heater for possible shipping damage. If any is found, *immediately* contact the manufacturer at 800-251-0001.
2. Follow all of the "Precautions".
3. Fill the fuel tank with clean kerosene. In extremely cold weather, condensation may develop in the tank and it is recommended that a tablespoon of de-icer be added for each gallon (4 liters) of fuel in the tank. When filling the heater, use at least 2 gallons (8 liters) of fuel. Be sure heater is level and do not overfill. Use a funnel or can with a long fill spout.

IMPORTANT: Before filling fuel tank the first time or after extended storage periods, drain the fuel tank of any moisture or condensation.

4. Locate heater at a safe distance from combustible materials. Models MH50KR & MH75KTR are not suitable for use on wood floors or other combustible materials. When used, the heater should rest on suitable insulating material at least 1 inch thick and extending 3 ft. or more beyond the heater in all directions.

HEATER START UP

1. **MH50KR:** Plug the heater into a grounded 115V, 60 Hz, 1 Ø outlet.

   MH75KTR, MH125KTR, MH175KTR & MH210KTR: Turn thermostat to lowest setting, make sure "On/Off" switch is "Off". Plug the heater into a grounded 115V, 60 Hz, 1 Ø outlet. Turn thermostat to highest setting. Start heater by pushing toggle switch to "On" position (light signifies switch is in "ON" position). Adjust thermostat to desired setting. Heater will cycle on/off as heat is required.

   EXTENSION CORD REQUIREMENTS: Up to 100' (30.5m) use 16 awg. conductor. 101' - 200' (30.5 - 61.0m) use 14 awg. conductor.

For all models:

- In cold weather (below 10° F), starting may be improved by holding a finger over the vent hole of the pump adjustment screw cap until the heater starts.
- This unit is equipped with an interrupt circuit. The reset is integrated into the "On/Off" switch. If the unit does not start, toggle the switch to "Off", wait 5 min. and toggle the switch to "On".

HEATER SHUT DOWN

1. **MH50KR:** Unplug heater from power source.
   MH75KTR, MH125KTR, MH175KTR & MH210KTR: Push "On/Off" switch to "Off" position. For extended shutdown, unplug heater from power source.

RESTART AFTER SAFETY SHUTDOWN (MH50KR, MH75KTR, MH125KTR, MH175KTR & MH210KTR) See page 7

MH50KR - Unplug unit. Wait 5 minutes. Plug back in.
MH75KTR, MH125KTR, MH175KTR & MH210KTR - Toggle switch to "OFF" position, wait 5 minutes. Restart.

MAINTENANCE AND STORAGE

WARNING. To prevent personal injury, unplug the heater from the wall outlet before servicing.

For maximum efficiency and trouble-free service, make the following periodic maintenance, cleaning and inspections.

ADJUSTING PUMP PRESSURE

Due to varying fuel viscosities and normal component wear the pump pressure on this heater may need to be adjusted.

ADJUSTMENT PROCEDURE:

1. Fill fuel tank.
2. Start heater.
3. Locate the fuel pressure adjustment screw (ref. #29) in the exploded parts drawing. The pressure adjustment screw is located at the rear of the heater, in the air filter housing cover (approx.2" from the left side and 1" from the top). Remove and discard the rubber cap (ref. #4) to expose the screw.
4. Using a flat bladed screw driver, turn the pump pressure adjustment screw clockwise to increase pump pressure and/or counter-clockwise to decrease pump pressure. Base pump pressures can be found in the specifications chart on page 3 of the "Operating Instructions and Owners' Manual".
5. For best results, the nose cone in the combustion chamber should be cherry red with no dark spots and the flame should not extend beyond the nose cone.

IMPROPER PRESSURE ADJUSTMENT

Problem: Heater does not have a strong consistent flame.
Heater smokes and spits raw fuel.
Nose cone does not get cherry red.

Adjustment: Pump pressure is too low.
Turn adjustment screw clockwise to increase pump pressure.

Problem: Flame extends beyond the end of the heater.

Adjustment: Pump pressure is too high.
Turn adjustment screw counter clockwise to decrease pump pressure.

DAILY SCHEDULE

1. GENERAL. Make general visual inspection of heater for loose or damaged parts. Check nuts and bolts to insure against looseness caused by vibration or rough handling. Damaged parts should be repaired or replaced before using heater again. Check heater operation to be sure it is operating normally (See "Servicing" section for description of normal operation).
2. FILTERS. Dirty air or fuel filters will cause an imbalance in the air-fuel mixture. The best indication that this condition exists is an increase in odors or difficulty getting your heater to ignite. This heater should never be operated without the filters in place. If required, clean filters as described under "500 Hours" and "Annual Schedules".

500 HOUR SCHEDULE

1. AIR INTAKE FILTER. Remove and wash the filter element with a mild detergent, dry thoroughly and replace. Do not oil the filter element. If your heater is used where there is considerable dust or dirt, clean as often as necessary (approximately every 50 hrs.).
2. REMOVE DUST. Clean heater twice a season (more often under dusty conditions). Remove accumulated dust from the transformer, burner, motor and fan blades with compressed air. Wipe area clean with a clean dry cloth. Inspect area to insure all foreign materials are removed, especially around the burner and combustion area.
3. CAD CELL. Clean the glass portion of the cad cell with a soft dry cloth.
4. NOZZLE. Accumulation of dirt from fuel and carbon from the compressor vanes will eventually fill up the passages in the nozzle, resulting in reduction of fuel and air flow. Pressure will gradually increase giving improper fuel-air mixture and excess odor and smoke. If this occurs, replace the fuel nozzle.
5. FUEL TANK. Clean twice a season (during frequently used periods, clean twice a month). Drain and flush the fuel tank with clean fuel oil.

ANNUAL SCHEDULE

1. AIR OUTPUT FILTER. Remove the air output filter and tap the contaminated side gently on a solid object to remove contaminates. Compressed air or liquids should not be used to clean this filter. Reinstall cleaned filter in filter body in the same position as it was when removed. If the filter appears extremely dirty, replace it with a new filter of the same type. When replacing the filter cover, be sure the gasket is firmly in place and the screws in the filter cover are tight to prevent air leaks.
2. FUEL FILTER. Remove the fuel filter from fuel line and direct compressed air through the filter in the opposite direction of fuel flow. Safety glasses should be worn when using compressed air.
3. AIR AND FUEL LINES. If the air or fuel lines are removed during cleaning, be sure all connections are tight before operating unit.

STORAGE

Store the heater in a dry location free from fumes or dust.

At the end of each heating season, clean the heater as described in the MAINTENANCE section. Drain and flush the fuel tank with clean fuel. The manufacturer recommends completely filling the tank with fuel for extended storage to minimize condensation inside the tank.

SERVICING

A hazardous condition may result if a heater is used that has been modified or is not functioning properly.

When the heater is working normally:

* The flame is contained within the heater.
* The flame is essentially yellow.
* There is no strong disagreeable odor, eye burning or other physical discomfort.
* There is no smoke or soot internal or external to the heater.
* There are no unplanned or unexplained shut downs of the heater.

DIAGNOSTIC SAFETY SHUTDOWN AND TROUBLE SHOOTING

Model **MH125KTR, MH175KTR and MH210KTR** heaters are equipped with a diagnostic control board and flashing LED error indicator. This flashing LED signals indicate unit operation status. See the following diagnostic guide for unit status and corrective action if necessary.

LED	UNIT OPERATION	TROUBLE SHOOTING
Steady ON	System Check	System performing self test. No action required.
Steady OFF	Operation OK	No action required.
2 Flashes	No flame detected	Heater fails to start during the first 30 sec. of operation. 1. Check wiring to motor (per wiring schematic in manual). 2. Make sure that the pressure gauge is in place and not damaged. 3. Adjust pressure for proper heater operation per manual. 4. With heater disconnected from AC source, rotate fan clockwise to verify motor is free. 5. Remove air filter housing from motor and inspect the pump rotor for damage. If damaged, replace rotor assembly. 6. If wiring is correct, pump rotor is okay, and motor is not rotating freely, replace motor or power-pack assembly. 7. If problem persists, replace oil flame control assembly. 8. Check for spark arching from the electrode assembly (ref. 50), to the combustion cylinder (ref. 39). 9. Check the cad cell (ref. 38) for continuity.
3 Flashes	High limit switch failure	1. Make sure heater is cooled off, press reset switch and retry.
4 Flashes	CAD Cell Failure	1. Check wiring to cad cell (per wiring schematic in manual). 2. Clean cad cell photo cell. • Slide cad cell out of cad cell holder. • Push the photo cell out of the black rubber cad cell housing by pushing on the 2 purple wires. • Clean the photo cell with a soft cloth and rubbing alcohol. • Pull the photo cell back into the cad cell housing and reinstall into holder. • Test heater. 3. If the heater still does not operate, replace cad cell. 4. Replace oil flame control assembly.
Power Light	Power to control	1. Sensing power. No action required.

Model **MH50KR and MH75KTR** heaters are NOT equipped with a diagnostic control board or flashing LED error indicator. See the following troubleshooting guide for unit status and corrective action if necessary.

SYMPTOM	TROUBLE SHOOTING
High limit switch Open Circuit	1) Make sure heater is cooled off, toggle switch to "OFF" position, wait 5 minutes and retry.
Sparks, calling for flame, but no or slow motor operation	1) Check wiring to motor (per wiring schematic in manual). 2) Make sure that the pressure gauge is in place and not damaged. 3) Adjust pressure for proper heater operation per manual. 4) With heater disconnected from AC source, rotate fan clockwise to verify motor is free. 5) Remove air filter housing from motor and inspect the pump rotor for damage. If damaged, replace rotor assembly. 6) If wiring is correct, pump rotor is okay, and motor is not rotating freely, replace motor or power-pack assembly. 7) If problem persists, replace oil flame control assembly. 8) Check for spark arching from the electrode assembly, to the combustion cylinder. 9) Check the cad cell for continuity.
No Spark	1) Check length and gage of extension cord for proper amp. draw. (Check requirements on page 4.) 2) Check wiring to igniter (per wiring schematic in manual). 3) Check gap between electrode probes (2.3 - 3 mm). 4) Still no spark, replace igniter assembly. 5) Replace oil flame control assembly.
Abnormal Motor Operation - Motor overheats or Stops	1) Motor speed too low (Motor should operate at 3450rpm) - Replace motor. 2) With heater disconnected from AC source, rotate fan clockwise to verify motor is free. 3) Remove air filter housing from motor and inspect the pump rotor for damage. If damaged, replace rotor assembly. 4) If wiring is correct, pump rotor is okay, and motor is not rotating freely, replace motor or power-pack assembly. 5) Replace oil flame control assembly.
Unable to Detect Flame	1) Check wiring to cad cell (per wiring schematic in manual). 2) Clean cad cell photo cell. a) Slide cad cell out of cad cell holder. b) Push the photo cell out of the black rubber cad cell housing by pushing on the 2 purple wires. c) Clean the photo cell with a soft cloth and rubbing alcohol. d) Pull the photo cell back into the cad cell housing and reinstall into holder. e) Test heater. 3) If the heater still does not operate, replace cad cell. 4) Replace oil flame control assembly.
Flame Control Failure	1) Check wiring in heater (per wiring schematic in manual). 2) Replace oil flame control assembly.

WIRING DIAGRAM

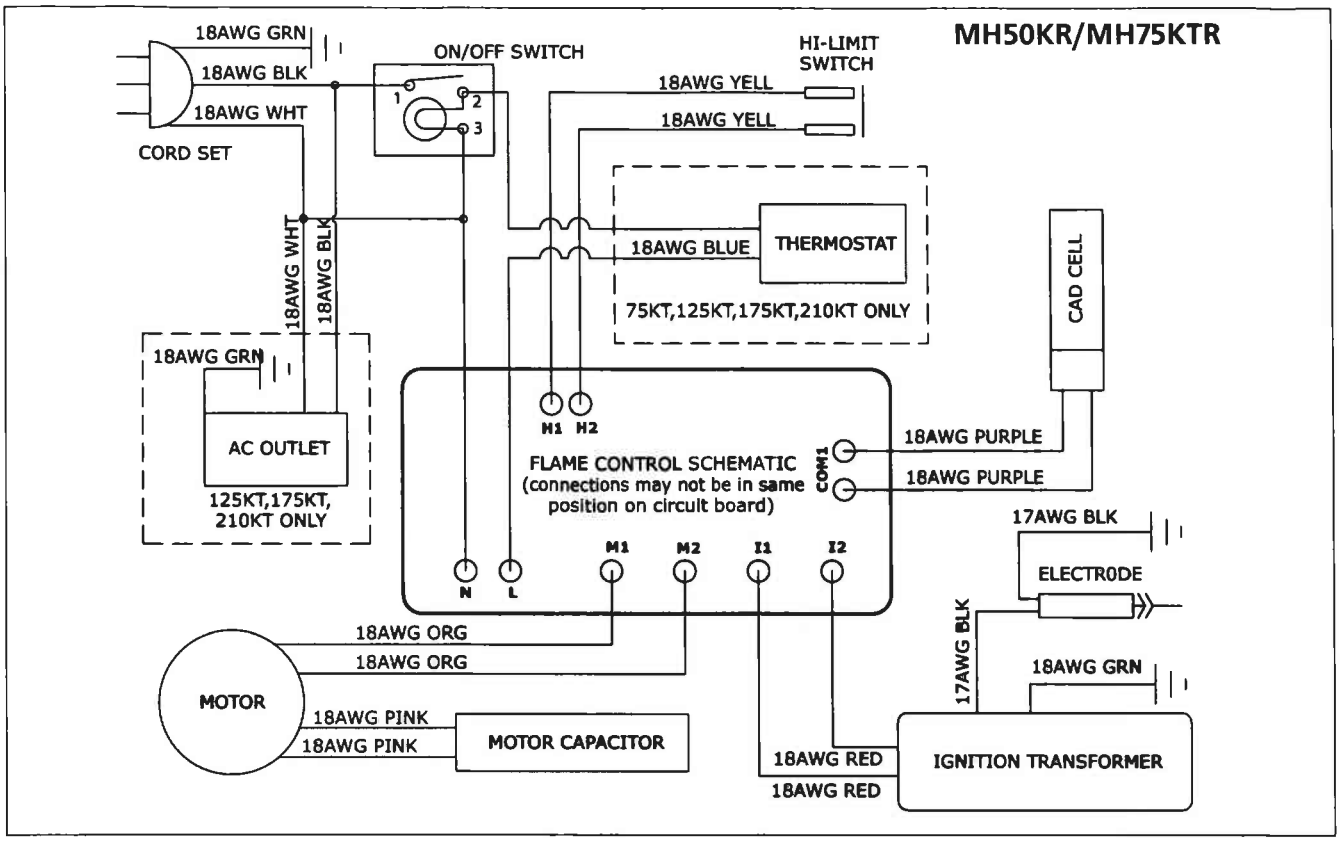

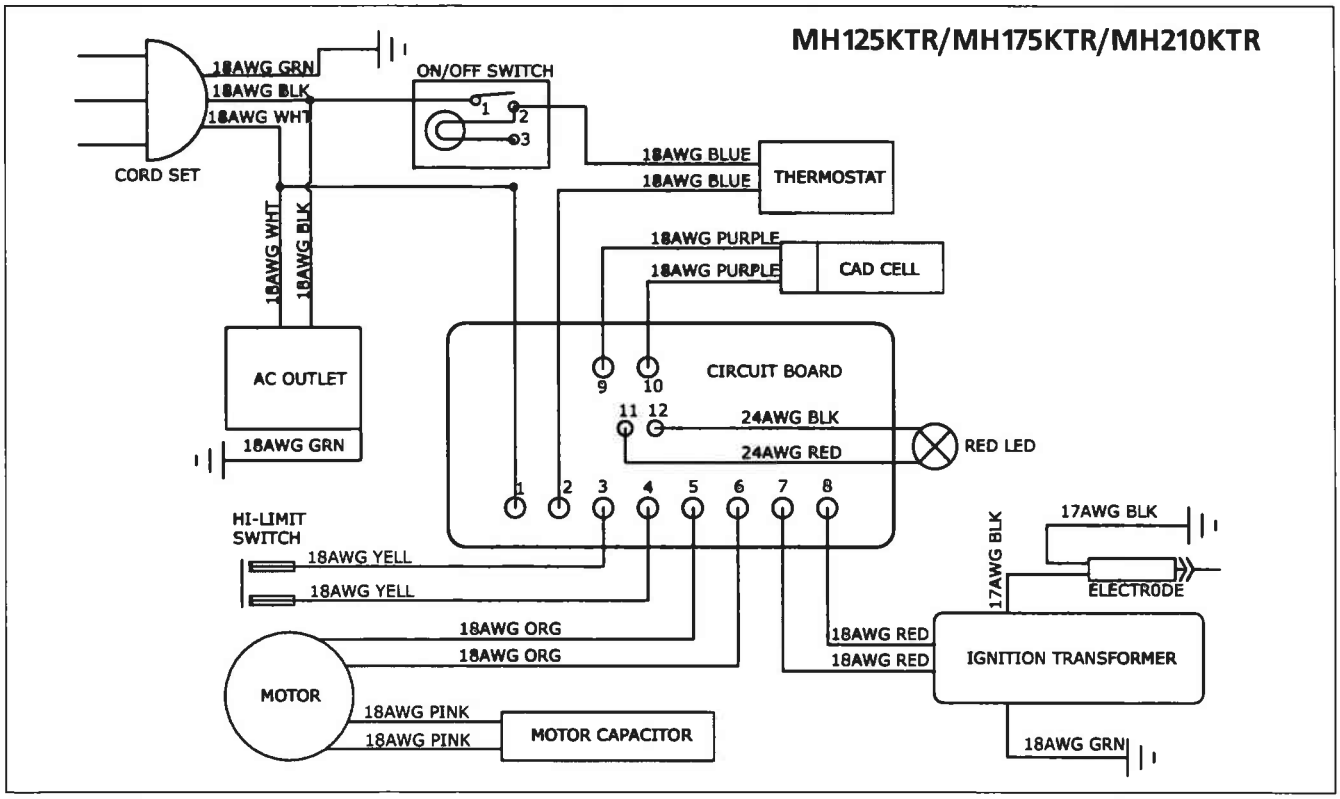

The parts lists and wiring diagram show the heater as it was constructed. Do not use a heater which is different from that shown. Heater performance is effected by air pressure setting. If there is any uncertainty about the air pressure setting, have it checked.

A heater which is *not* working right must be repaired, but *only* by a trained, experienced service person.

PARTS LIST

Ref.	Item # MH50KR	Item # MH75KTR	Item # MH125KTR	Item # MH175KTR	Item # MH210KTR	Description
1	21036	21036	21036	21036	21036	Power Cord
2	21832	21833	21915	21834	21834	Fuel Tank Assembly
3	****	21883	21884	21885	21886	RadiationShield Ass'y
4	21807	21808	21809	21809	21809	Power Pac Ass'y
5	21686	24343	24346	24346	24346	Fuel Tube
6	21835	21836	21837	21837	21837	Grille Assembly
7	24011	24011	24011	24011	24011	Oil cad cell Bracket
8	28779	28779	28792	28780	28780	Fuel Filter
9	23449	23449	23449	23449	23449	Motor Cord Sleeve
10	21839	21840	21841	21842	21843	Bottom Shell
11	21844	21846	21848	21850	21852	Top Shell, Burner
12	21854	21856	21858	21860	21862	Top Shell, Insp. Cover
13	21864	21864	21865	21865	21865	Motor Mounting Brkt
14	****	28788	28735	28735	28735	Start Capacitor
15	23725	23725	24345	24345	24345	Air Tube
16	26225	26225	26225	26225	26225	Snap Bushing
17	21794	21794	26901	26902	22105	High Limit Control
18	F226831	F226831	F226831	F226831	F226831	Kit, Rotor - Air Pump Rotor w/Vanes - Nylon Air Pump Insert
19	****	26898	26898	26898	26898	Receptacle, 110V
20	****	22104	22104	22104	22104	AC Receptacle Cover
21	26833	26833	26833	26833	26833	Air Pump Cylinder
22	21810	21810	21810	21810	21810	Outlet Housing
23	21812	21812	21812	21812	21812	Inlet Housing
24	****	****	22257	22257	22257	Burner Head Ass'y
25	F221887	F221887	F221887	F221887	F221887	Kit, Filter
26	21814	21814	21814	21814	21814	Outlet Filter
27	21815	21815	21815	21815	21815	Inlet Filter
28	F266842	F266842	F266842	F266842	F266842	Kit, Pump Adjustment - Nylon Pipe Plug - Pump Adj. Screw Cap - Ball,. Pressure adj. - Spring, Pressure adj.
29	21866	21866	21867	21867	21867	Flame Control Ass'y
30	21816	21816	21816	21816	21816	Flame Control Bracket
31	26954	24955	26954	26954	26954	Cad Cell Flame Sensor
32	21882	21868	21869	21870	21871	Comb.Chamber Cyl.Ass'y
33	26909	26909	26909	26909	26909	Fuel Cap
34	26910	26910	26910	26910	26910	Fuel Cap Gasket
35	27339	21817	21818	21818	21818	Motor
36	27790	27790	28739	28739	28739	Nozzle Adapter
37	27421	28740	26885	26866	22108	Fan
38	22142	22142	22142	22142	22142	Igniter Assembly
39	27416	28741	28742	28743	22109	Fuel Air Aspir. Nozzle
40	26223	26223	26223	26223	26223	Strain Relief Bushing
41	21819	21819	21819	21819	21819	Electrode Assembly
42	21820	21820	21820	21820	21820	Electrode Insulated Cover
43	21821	21821	21821	21821	21821	Hose Barb Adapter
44	****	21822	21822	21822	21822	Thermostat Knob
45	****	21734	21734	21734	21734	Thermostat Assembly
46	28785	28785	28785	28785	28785	ON/OFF Switch
47	****	28791	28778	28778	28778	Fuel Gauge
48	21830	21888	21826	21826	21826	Control Panel
49	21892	21892	21893	21893	21893	Control Panel Back
50	28786	28786	28786	28786	28786	Pressure Gauge, Round
51	27094	27094	****	****	****	Clip Handle Mtg.
52	27095	27095	****	****	****	Handle
53	21813	21813	21813	21813	21813	Gasket, Outlet Filter
*	24171	24171	****	****	****	Nozzle mtg. plate
*			26227	26227	26227	Snap Bushing
*	27429	27429	27429	27429	27429	Nozzle Ext. Retaining Ring
*	28745	28745	****	****	****	Fuel Line Bushing
*	****	22146	22146	22146	22146	Bracket Thermostat Mtg.
*	****	26070	26070	26070	26070	Clamp Loop

* Not shown in the drawing

PARTS LIST

Ref.	Item # MH125KTR	Item # MH175KTR	Item # MH210KTR	Description
1	22169	22169	22169	Wheel Assembly, 10"
2	22172	22172	22172	Upper Handle w/Spring Clips
*	22173	22173	22173	Lower Handle, Right
3	22174	22174	22174	Lower Handle, Left
*	22176	22176	22176	Leg Support, Right
4	22177	22177	22177	Leg Support, Left
5	22178	22178	22178	Support Leg
6	22179	22179	22179	Front Handle w/Axle
7	28749	28749	28749	Large Retainer Washer
8	28750	28750	28750	Cotter Pin
9	28751	28751	28751	Hub Cap
10	28754	28754	28754	Extension Cord Caddy
11	21897	21897	21897	Wheel Spacer
*	28787	28787	28787	Hardware Package

* Not shown in drawing

Handle and wheel assembly for MH125KTR, MH175KTR & MH210KTR only.

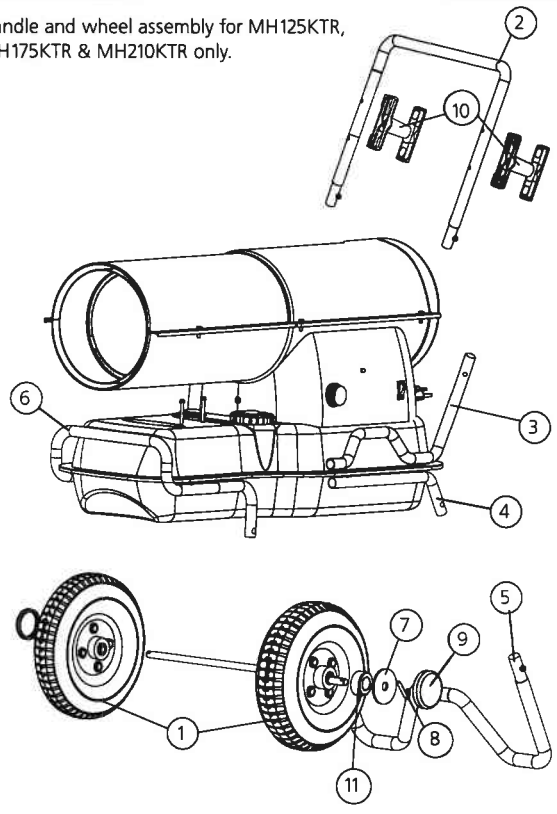

Figure 1.

Kerosene Forced Air Heater • Model MH50KR, MH75KTR, MH125KTR, MH175KTR, MH210KTR

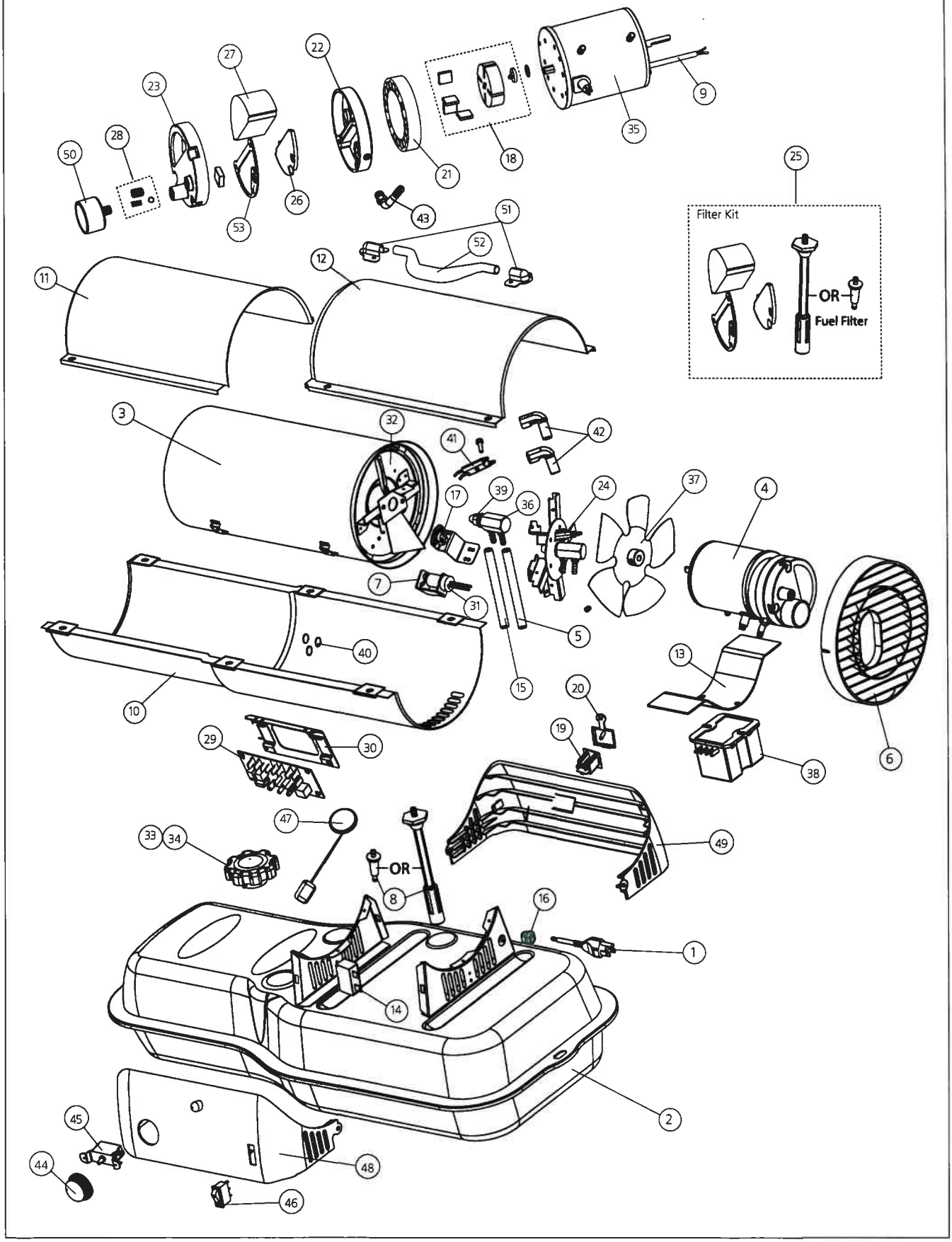

OPERATING INSTRUCTIONS AND OWNER'S MANUAL

Model #
MH50KR, MH75KTR, MH125KTR, MH175KTR, MH210KTR

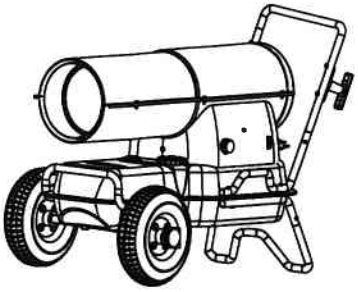

WARNING:

USE ONLY MANUFACTURER'S REPLACEMENT PARTS. USE OF ANY OTHER PARTS COULD CAUSE INJURY OR DEATH. REPLACEMENT PARTS ARE ONLY AVAILABLE DIRECT FROM THE FACTORY AND MUST BE INSTALLED BY A QUALIFIED SERVICE AGENCY.

PARTS ORDERING INFORMATION:

PURCHASING: Accessories may be purchased at any Mr. Heater local dealer or direct from the factory

FOR INFORMATION REGARDING SERVICE

Please call Toll-Free 800-251-0001
www.mrheater.com

Our office hours are 8:30 AM – 5:00 PM, EST, Monday through Friday.

Please include the model number, date of purchase, and description of problem in all communication.

LIMITED WARRANTY

Mr. Heater, Inc. warrants its heaters and accessories to be free from defects in material and workmanship for a period of 1 year from date of purchase. Mr. Heater, Inc. will repair or replace this product free of charge if it has been proven to be defective within the 1-year period, and is returned at customer expense with proof of purchase to Mr. Heater, Inc. within the warranty period.

Mr. Heater, Inc. reserves the right to make changes at any time, without notice or obligation, in colors, specifications, accessories, materials and models.

MR. HEATER, INC., 4560 W. 160TH ST., CLEVELAND, OHIO 44135 • 800-251-0001
Mr. Heater is a registered trademarks of
Enerco Technical Products, Inc.
© 2009, Enerco/Mr. Heater. All rights reserved

UL-733, &CSA/CAN3-B140.9.3

INFRARED HEATER

VAL6 THE RIGHT CHOICE FOR YOU

SUNLIGHT'S WARMTH TO ANY COLD SPACE

VAL6 reaches peak efficiency in just a couple of minutes.
VAL6 is the most fuel efficient oil heater on the market.
VAL6 is effective in a variety of applications.
VAL6 is the most efficient form of heating per BTU energy burned.

ADVANTAGES

RADIANT HEAT

Heat penetrates evenly like heat from sunlight

OUTDOOR USE

VAL6 is not affected by wind as forced air heaters that suffer from heat loss in the ambient air

HEAT TRANSFER

VAL6 generates infrared heat directly to the object without any air movement creating a dust-free comfortable environment

ODORLESS

Clean, complete combustion system produces no odor or smoke while it is running

ENERGY SAVINGS

State of the art combustion chamber enables virtually 100% fuel to energy conversion.

STRAIGHT HEATING/DRYING

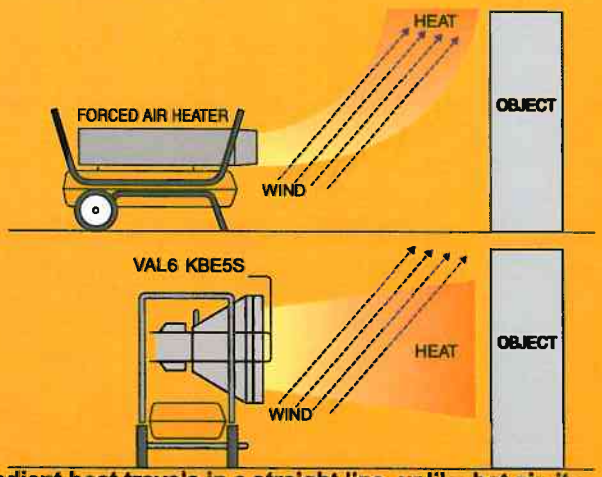

Radiant heat travels in a straight line, unlike hot air, its unaffected by wind or cold ambient air. Therefore, only the targeted surface/object is warmed and/or dried (without raising the ambient temperature in unnecessary areas)

APPLICATION EXAMPLES

- Factories, Plants, Workshops
- Outdoor Projects
- Construction Sites (including indoor use)

SPECIFICATIONS

Type	VAL6 KBE5S
Heat Output	111,000 BTU/h 32.5kw
Nozzle	0.85 gal/h
Fuel	Diesel, Kerosene
Tank Capacity	9 gallons
Power Source	120V 60Hz
Power Consumption	80W
Monitoring System	Photocell flame monitor, 3A fuse
Adjustable Disc Angle	Tilts upward 20 degrees
External Dimension (H×W×L)	36.1×25.8×27.7 (in)
Dry Weight	83.8 lbs

TEMPERATURE DIAGRAM

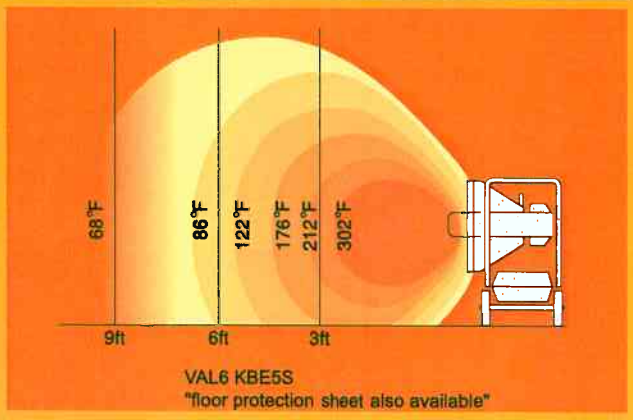

JTI TRADE, INC.
9555 Owensmouth Ave., Unit 1
Chatsworth, CA 91311
Toll Free: (877) VALVAL6

C SA US

Manufactured by
Shizuoka Seiki Co.,Ltd.
Shizuoka, Japan

PAINT BOOTH AND BLASTING BOOTH PARTICULATE FILTER INFORMATION

Customer:

WESTERN NONWOVEN.

Date: 09/10/98	Test Performed By: Rick L. Chapman EFCO 805-642-2079		
Temp. 79.7 F	Product Name: FL -1000 Tack		
Humidity: 58%	Test Velocity: 300 FPM		Resistance: 0.14 in. W.G.

PARTICLE SIZE (MICRON)	EFFICIENCY		Note
0.3	1.2%		
0.5	5.1%		
5	74.1%		
10	91.2%		

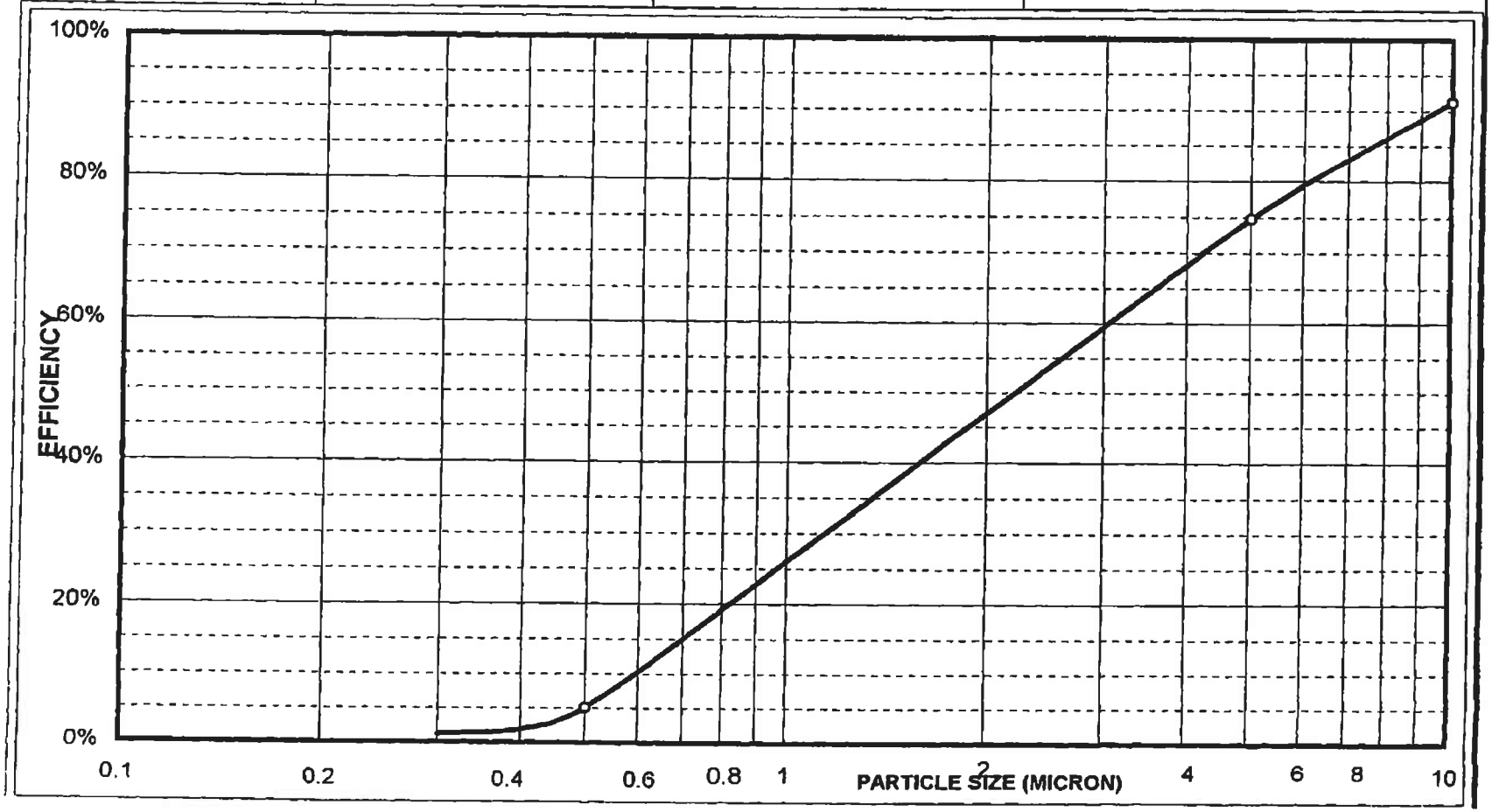

Customer:

WESTERN NONWOVEN.

Date: 09/20/98	Test Performed By: Rick L. Chapman EFCO 805-642-2079		
Temp. 80.27	Product Name: FL -1000 Tack		
Humidity: 59%	Test Velocity: 500 FPM		Resistance: 0.28 in. W.G.

PARTICLE SIZE (MICRON)	EFFICIENCY		Note
0.3	0.4%		
0.5	5.8%		
5	72.1%		
10	81.2%		

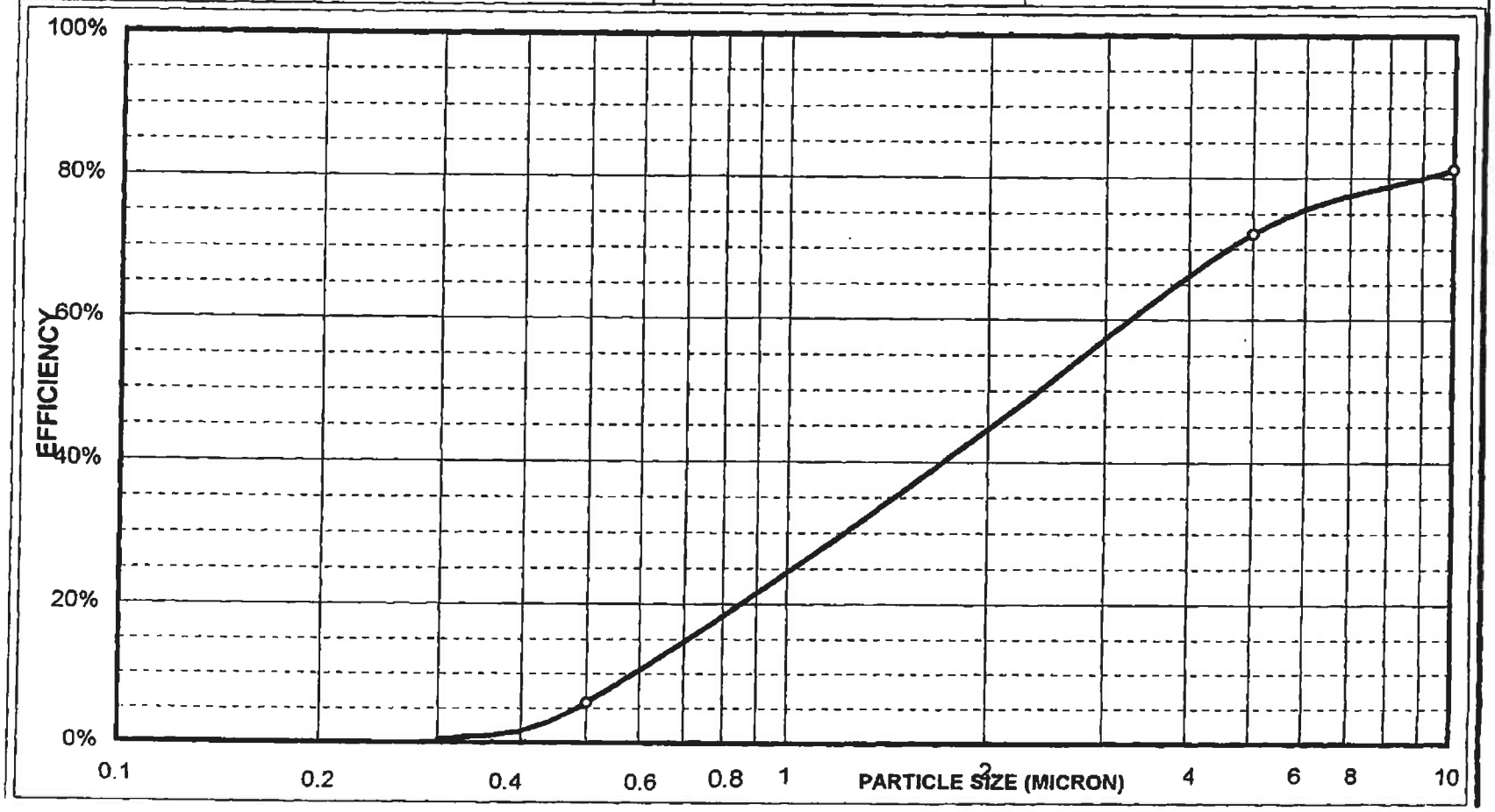

AIR FLOW TECHNOLOGY Inc.

Filtrair FF-560 GX

Ceiling Diffusion Media

Filtrair FF-560 GX ceiling diffusion media is available in a complete range of standard size pads, rolls, panels and custom sizes, cross-referenced for easy selection to fit all paint spray booths and prep-stations.

Manufactured in the Netherlands, Filtrair FF-560 GX is designed to provide **superior** intake air filtration in paint spraybooths used by the automotive refinishing and industrial finishing markets where controlled laminar air flow is required. Its lightweight design makes it a good choice for both full paint spraybooths as well as for prep stations.

Media Design - Filtrair FF-560 GX is a synthetic nonwoven media, progressively structured and thermally bonded to ensure maximum efficiency and dust loading capacity. A non-migrating tackifier coats the interlocking fibers to ensure the highest retention of dirt particles. Filtrair FF-560 GX is designed with a downstream polyester scrim netting that adds rigidity, ensures dimensional stability, and prevents fiber migration. Filtrair FF-560 GX synthetic media is rated UL 900 Class 1, and is non-toxic, environmentally friendly, and temperature resistant up to 212°F with peaks to 250°F.

Performance - The multi-layer structure of Filtrair FF-560 GX results in **99%+** filtration efficiency on particles **7 to 10 microns and greater**. Filtrair FF-560 GX ceiling diffusion media achieves optimum efficiency while maintaining a low pressure drop. In addition, the fiber structure of the Filtrair FF-560 GX media promotes laminar air flow in paint spray booths. The high holding capacity reduces downtime for changeouts, resulting in higher productivity and lower costs.

Performance Data

FF-560 GX

Filtrair

Air Flow Technology provides independent test data on particle size efficiency and initial resistance to rated air flow on all of our paint spraybooth filtration products. This information is provided to assist you in the proper selection of a filter system for your particular application. Whether your requirement is low static pressure (resistance) or high performance, you can depend on the independent data provided to guide your selection process to the proper AFT product.

Independent Test Data	*Unit*	*FF-560 GX*
Rated Air Flow*	**fpm**	**100**
Initial Resistance*	**"w.g.**	**0.17**
Thickness	**in**	**0.87**
Efficiency on particles 7-10 microns and greater*	**%**	**99+**
Media Basis Weight	**g/m²**	**470**

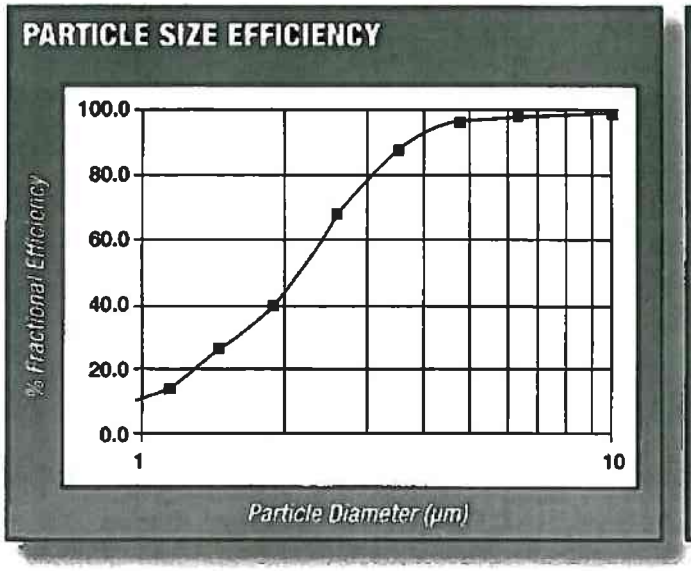

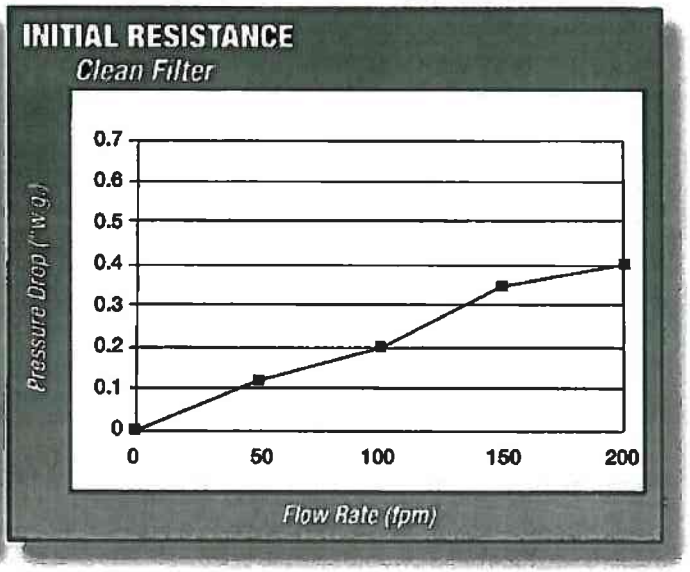

*Filter tested per ASHRAE 52.2, Test Aerosol KCl, Neutralized. This test data is based upon clean filter performance. All filters increase in efficiency with dust loading.

For other quality HVAC, Industrial Finishing, and Paint Spray Booth Filtration Products, refer to HVAC Filtration All Product Bulletin HPB1, and Paint Spray Booth Filtration All Product Bulletin PPB1.

AIR FLOW TECHNOLOGY Inc.

4810 70th Avenue
Kenosha, WI 53144
Tel. 262-657-2200
Fax. 262-657-2210
www.airflowtechnology.com
1-800-537-5454

Distributed By:

PAINT GUN INFORMATION

Electric Sprayers

Graco's Complete Line of Professional Electric Airless Sprayers

PROVEN QUALITY. LEADING TECHNOLOGY.

Ultra Max II 695/795/1095/1595

Ultra Max II 695 Standard

DESCRIPTION	PART #:
Ultra Max II 695 Hi-Boy	258720
Ultra Max II 695 Lo-Boy	258722

SPECIFICATIONS:

MAX TIP SIZE:	0.031-1 Gun 0.023-2 Guns
MAX GPM (LPM):	0.95 (3.6)
MAX PSI (BAR):	3300 (227)
MOTOR:	2.0 hp Brushless DC

INCLUDES:

- Contractor Gun
- RAC X 517 SwitchTip and Guard
- 1/4 in x 50 ft (6.4 mm x 15 m) BlueMax II Airless Hose

Ultra Max II 795 Standard

DESCRIPTION	PART #:
Ultra Max II 795 Hi-Boy	258724

SPECIFICATIONS:

MAX TIP SIZE:	0.033–1 Gun 0.025–2 Guns 0.019–3 Guns
MAX GPM (LPM):	1.10 (4.1)
MAX PSI (BAR):	3300 (227)
MOTOR:	2.2 hp Brushless DC

INCLUDES:

- Contractor Gun
- RAC X 517 SwitchTip and Guard
- 1/4 in x 50 ft (6.4 mm x 15 m) BlueMax II Airless Hose

PRO CONNECT

SMARTCONTROL™

ENDURANCE ADVANTAGE

The **Ultra Max II 695/795/1095/1595** are the industry standard for professional contractors who spray a full range of coatings on residential, commercial and industrial jobs. These sprayers handle the widest range of tip sizes, longer hose lengths and heavier coatings with ease. Now with ***higher performance*** allowing you to get your job done faster!

SmartControl 2.0 Pressure Control

- Advanced microprocessor control delivers a consistent spray fan without pressure fluctuation at all spraying pressures

Easy Out Pump Filter

- Large filtering area reduces tip clogs and ensures a quality finish
- Easy Out design filters from the inside out – filters won't get stuck or collapse when dirty
- Filter removes simply with the cap for less mess

MaxPower Brushless DC Motor

- No brushes to replace
- Compact, lightweight motor delivers higher horsepower per wall amp
- Enclosed design protects internal motor components from dirt, dust and overspray to extend motor life

Hi-Boy model shown

ELECTRIC AIRLESS SPRAYER SPECIFICATIONS

		390	Ultra 395	Ultra Max II 490	Ultra Max II 495	Ultra Max II 595
MODEL	Cart Design–Part Number	Stand–253958 Hi-Boy–262019	Stand–233960 Hi-Boy–233962 Lo-Boy–233961	Stand–249911 Hi-Boy–249914 Lo-Boy–249913	Stand–249915 Hi-Boy–249917 Lo-Boy–249916	Hi-Boy–249919 Lo-Boy–249918
SPECIFICATIONS	Maximum Tip Size	0.021	0.023	0.023	0.025	0.027
	Maximum psi (bar)	3300 (227)	3300 (227)	3300 (227)	3300 (227)	3300 (227)
	Maximum gpm (lpm)	0.47 (1.8)	0.54 (2.0)	0.54 (2.0)	0.60 (2.3)	0.70 (2.6)
	Motor hp	5/8 DC	7/8 TEFC DC	1.0 Brushless DC	1.2 Brushless DC	1.4 Brushless DC
	Weight lbs (kg)	30 (14) Stand	42 (19) Stand	34 (15) Stand	34 (15) Stand	72 (33) Hi-Boy
	Gun Support: 1 Gun 2 Guns 3 Guns	0.021 — —	0.023 — —	0.023 — —	0.025 — —	0.027 — —
INCLUDES	Gun	FTx	Contractor	Contractor	Contractor	Contractor
	Hose	1/4 in x 50 ft (6.4 mm x 15 m) BlueMax II Airless	1/4 in x 50 ft (6.4 mm x 15 m) BlueMax II Airless	1/4 in x 50 ft (6.4 mm x 15 m) BlueMax II Airless	1/4 in x 50 ft (6.4 mm x 15 m) BlueMax II Airless	1/4 in x 50 ft (6.4 mm x 15 m) BlueMax II Airless
	Tip	RAC X 515	RAC X 517	RAC X 517	RAC X 517	RAC X 517
	Filter	60 Mesh Easy Out	60 Mesh Easy Out	60 Mesh Easy Out	60 Mesh Easy Out	60 Mesh Easy Out
PUMP	Type	QuikChange System	QuikChange System	QuikChange System	QuikChange System	QuikChange System
	Intake	QuikAccess	QuikAccess	QuikAccess	QuikAccess	QuikAccess
	Rod	Chromex	Chromex	Chromex	Chromex	Chromex
	Cylinder	Hardened SST	Hardened SST	Hardened SST	Hardened SST	Hardened SST
	Packings	V-Max Blue	V-Max Blue	V-Max Blue	V-Max Blue	V-Max Blue
CONTROL & DRIVE	Control	Electronic	SmartControl 1.0	SmartControl 2.0	SmartControl 2.0	SmartControl 2.0
	Drive	Advantage Drive	Advantage Drive	Advantage Drive	Advantage Drive	Advantage Drive
	Motor	DC	TEFC DC	MaxPower	MaxPower	MaxPower

SHOP HEATER INFORMATION

Advanced Distributor Products®

SG-UUH-00
November 2011

Specification Guide

FSA, FOA, SEP, & HED Series

Unit Heaters and Duct Furnaces

Contents **Page**

Nomenclature 2
Product Features 3
FSA Series 4
FOA Series 6
SEP Series 8
HED Series 10

AHRI CERTIFIED™ www.ahridirectory.org

ISO 9001:2008
Registered Quality System

ETL LISTED c us

Product improvement is a continuous process at Advanced Distributor Products. Therefore, product specifications are subject to change without notice and without obligation on our part. Please contact your ADP representative or distributor to verify details.
© by Advanced Distributor Products. All rights reserved.

2175 West Park Place Blvd., Stone Mountain, GA 30087
www.adpnow.com

SEP Series

Commercial Unit Heaters

Product Features

- Heating capacities from 100,000 – 400,000 BTUH.
- Up to 80.5% thermal efficiency.
- Stainless steel heat exchanger is available for longer product life.
- Power exhaust system with a sealed flue collector allows conventional vertical or horizontal venting to 35 ft.
- Sidewall venting eliminates roof penetrations.
- Wiring junction box is located outside of unit.
- Self-diagnostic board with LED display improves troubleshooting efficiency and accuracy.
- Integrated spot nuts for easy installation using threaded rod.
- Easy to clean tubular heat exchangers made of aluminized steel or stainless steel, providing resistance to corrosion and oxidation.
- Heat exchangers are laboratory life-cycle tested.
- Easy to clean in-shot burners.
- Direct drive propeller fans are dynamically balanced for quiet, smooth operation.
- Safe direct spark ignition. No standing pilot light.

	Gas Heating Performance					Connections	
Model	Heating Capacity Input (BTUH)	Output Natural Gas (BTUH)	Output LPG / Propane (BTUH)	Steady State Efficiency – Natural Gas	Steady State Efficiency – LPG / Propane	Flue Size Round (in)	Gas Piping Size (in, NPT)
SEP-100#-&	100,000	80,500	82,000	80.5%	82.0%	4 [1]	1/2
SEP-115#-&	115,000	92,000	92,000	80.0%	80.0%	4 [1]	1/2
SEP-145#-&	143,750	115,000	115,000	80.0%	80.0%	4 [1]	1/2
SEP-175#-&	172,500	138,000	138,000	80.0%	80.0%	5 [2]	1/2
SEP-200#-&	195,000	156,000	156,000	80.0%	80.0%	5 [2]	1/2
SEP-230#-&	230,000	184,000	184,000	80.0%	80.0%	5 [2]	3/4
SEP-250#-&	250,000	201,250	205,000	80.5%	82.0%	5 [2]	3/4
SEP-300#-&	300,000	241,500	246,000	80.5%	82.0%	5 [2]	3/4
SEP-345#-&	345,000	276,000	281,200	80.0%	81.5%	6 [3]	3/4
SEP-400#-&	390,000	312,000	312,000	80.0%	80.0%	6 [3]	3/4

[1] 2-1/8 x 4 in. (54 x 102 mm) diameter adaptor is furnished with unit for flue connection.
[2] 2-1/4 x 2-3/4 in. (57 x 70 mm) rectangular to 5 in. (127 mm) round adaptor is furnished with unit for flue connection.
[3] 2-1/4 x 2-3/4 in. (57 x 70 mm) rectangular to 6 in. (152 mm) round adaptor is furnished with unit for flue connection.

	Fan Data							Physical Data	
Model	Number of Fans	Diameter (in)	Number of Blades	Motor Output (hp)	Motor Full Load Amps	Motor RPMs	Air Volume (CFM)	Dimensions H x W x L (in)	Ship Weight (lbs)
SEP-100#-&	1	16	4	1/8	2.1	1075	1900	32-3/16 x 20-3/16 x 39-3/16	140
SEP-115#-&	1	16	4	1/8	2.1	1075	1900	32-3/16 x 20-3/16 x 39-3/16	140
SEP-145#-&	1	16	4	1/8	2.1	1075	1900	32-3/16 x 20-3/16 x 39-3/16	150
SEP-175#-&	1	16	4	1/8	2.1	1075	2200	32-3/16 x 23-1/8 x 39-3/16	165
SEP-200#-&	1	16	4	1/8	2.1	1075	2200	32-3/16 x 41-1/8 x 40	175
SEP-230#-&	2	16	4	1/8	2.1	1075	4400	32-3/16 x 41-1/8 x 40	260
SEP-250#-&	2	16	4	1/8	2.1	1075	4400	32-3/16 x 41-1/8 x 40	285
SEP-300#-&	2	16	4	1/8	2.1	1075	4400	32-3/16 x 41-1/8 x 40	305
SEP-345#-&	2	16	4	1/8	2.1	1075	4400	32-3/16 x 41-1/8 x 41-1/8	310
SEP-400#-&	2	16	5	1/8	2.1	1075	4400	32-3/16 x 41-1/8 x 41-1/8	315

A = Aluminized steel heat exchanger; S = Stainless steel heat exchanger; All models are 115 volts, 60 Hz, 1 phase.
& N = Natural Gas; P = LP Gas
Note: SEP unit heaters are not approved for residential applications.

MODINE
APPLIED THERMAL INNOVATION™

6-189.4
April, 2008

Gas-Fired Power Vented Unit Heaters
Propeller & Blower Models

MODEL HD

MODEL HDB

MODEL PDP

MODEL BDP

INDOOR AIR SOLUTIONS

MODINE INDOOR AIR SOLUTIONS

Table 6.1 - Propeller Unit Model HD and PDP General Performance Data

	Model HD Sizes						Model PDP Sizes						
	30	45	60	75	100	125	150	175	200	250	300	350	400
Btu/Hr Input ①	30,000	45,000	60,000	75,000	100,000	125,000	150,000	175,000	200,000	250,000	300,000	350,000	400,000
Btu/Hr Ouput ①	24,000	36,000	48,000	60,000	80,000	100,000	120,000	140,000	160,000	200,000	240,000	280,000	320,000
Entering Airflow (CFM) @ 70°F	505	720	990	1160	1490	1980	2180	2550	2870	3700	4460	4870	5440
Outlet Velocity (FPM)	523	725	653	769	565	747	931	959	819	1053	1123	1068	1016
Air Temp. Rise (°F)	44	46	45	48	50	47	51	51	52	50	50	53	54
Max. Mounting Height (Ft.) ②	10	10	12	14	12	16	16	17	15	19	21	20	19
Heat Throw (Ft.) @ Max Mtg Ht ②	25	27	36	38	42	56	55	59	51	67	74	70	69
Motor Type ③	SP	SP	PSC	PSC	SP	PSC	PSC	PSC	PSC	PSC	PSC	PSC	PSC
Motor HP	1/15	1/15	1/12	1/12	1/12	1/8	1/8	1/6	1/6	1/3	1/2	3/4	3/4
Motor RPM	1550	1550	1625	1625	1050	1625	1625	1075	1075	1075	1075	1125	1125

Table 6.2 - Propeller Unit Model HD and PDP Operating Electrical Data

Supply Voltage	Power Code		Model HD Sizes						Model PDP Sizes						
			30	45	60	75	100	125	150	175	200	250	300	350	400
115V 1 Phase	01 (115V)	Motor Amps	2.4	2.4	1.2	1.2	2.7	2.2	2.3	2.7	2.7	5.4	7.5	8.8	8.8
		Total Amps	3.7	3.7	2.5	2.5	4.7	4.2	4.0	5.1	5.1	7.7	9.8	11.1	11.1
		Transformer kVA	n/a	n/a	n/a	n/a	n/a	n/a	n/a	n/a	n/a	n/a	n/a	n/a	n/a
208V 1 Phase	01 (115V) with Transformer	Transformer kVA	0.5	0.5	0.5	0.5	1.0	1.0	0.5	1.0	1.0	1.0	1.5	1.5	1.5
		208V Total Amps	2.05	2.05	1.38	1.38	2.60	2.32	2.21	2.82	2.82	4.26	5.42	6.14	6.14
	03 (208V)	Motor Amps	n/a	n/a	n/a	n/a	n/a	n/a	1.0	1.5	1.5	n/a	n/a	n/a	n/a
		Total Amps							1.9	2.8	2.8				
230V 1 Phase	01 (115V) with Transformer	Transformer kVA	0.5	0.5	0.5	0.5	0.75	0.75	0.5	0.75	0.75	1.0	1.5	1.5	1.5
		230V Total Amps	1.85	1.85	1.25	1.25	2.35	2.10	2.00	2.55	2.55	3.85	4.90	5.55	5.55
	02 (230V)	Motor Amps	n/a	n/a	n/a	n/a	n/a	n/a	1.0	1.5	1.5	2.5	3.5	4.4	4.4
		Total Amps							1.9	2.8	2.8	3.7	4.7	5.5	5.5
208V 3 Phase	01 (115V) with Transformer	Transformer kVA	0.5	0.5	0.5	0.5	1.0	1.0	0.5	1.0	1.0	1.0	1.5	1.5	1.5
		208V Total Amps	2.05	2.05	1.38	1.38	2.60	2.32	2.21	2.82	2.82	4.26	5.42	6.14	6.14
230V 3 Phase	01 (115V) with Transformer	Transformer kVA	0.5	0.5	0.5	0.5	0.75	0.75	0.5	0.75	0.75	1.0	1.5	1.5	1.5
		230V Total Amps	1.85	1.85	1.25	1.25	2.35	2.10	2.00	2.55	2.55	3.85	4.90	5.55	5.55
460V 3 Phase	01 (115V) with Transformer	Transformer kVA	0.5	0.5	0.5	0.5	0.75	0.75	0.5	0.75	0.75	1.0	1.5	1.5	1.5
		460V Total Amps	0.93	0.93	0.63	0.63	1.18	1.05	1.00	1.28	1.28	1.93	2.45	2.78	2.78
575V 3 Phase	01 (115V) with Transformer	Transformer kVA	0.5	0.5	0.5	0.5	0.75	0.75	0.5	0.75	0.75	1.0	1.5	1.5	1.5
		575V Total Amps	0.74	0.74	0.50	0.50	0.94	0.84	0.80	1.02	1.02	1.54	1.96	2.22	2.22

① Ratings shown are for elevations up to 2,000 ft. For elevations above 2,000 feet, ratings should be reduced at the rate of 4% for each 1,000 feet above sea level. (In Canada see rating plate.) Reduction of ratings requires use of a high altitude kit.

② Data taken at 55°F air temperature rise. At 65°F ambient and unit fired at full-rated input. Mounting height as measured from bottom of unit, and without deflector hoods.

③ All motors used are produced, rated and tested by reputable manufacturers in accordance with NEMA standards and carry the standard warranty of both the motor manufacturer and Modine. All motors are totally enclosed and all single phase motors have built-in thermal overload protection.