IDAHO
DEPARTMENT OF ENVIRONMENTAL QUALITY

PARTIAL PERMIT FOR HWMA STORAGE and TREATMENT

for the

LIQUID WASTE MANAGEMENT SYSTEM at the IDAHO NUCLEAR TECHNOLOGY & ENGINEERING CENTER

on the

IDAHO NATIONAL LABORATORY

EPA ID NO. ID4890008952

Effective Date: October 18, 2004
Revision Date: November 30, 2011
Book 1 of 4

STATE OF IDAHO
DEPARTMENT OF
ENVIRONMENTAL QUALITY

1410 North Hilton • Boise, Idaho 83706-1255 • (208) 373-0502

Dirk Kempthorne, Governor
Toni Hardesty, Director

Permittee: **Department of Energy (DOE) and DOE-Designated Contractors, Idaho National Engineering and Environmental Laboratory, Idaho Nuclear Technology and Engineering Center (INTEC) Permit Number: EPA ID# ID4890008952**

INTRODUCTION AND SIGNATURE PAGE

Pursuant to the Idaho Hazardous Waste Management Act of 1983 (HWMA), as amended, Idaho Code §§ 39-4401 *et seq.*, and the "*Rules and Standards For Hazardous Waste*," as amended, IDAPA 58.01.05.000 *et seq.*, specifically IDAPA 58.01.05.012 [40 CFR § 270.1(c)(4)], a Partial-Permit (for less than the entire facility) is hereby issued to the United States Department of Energy (DOE) and DOE-designated contractor (see Permit Definitions), hereinafter called the Permittee, to operate a Hazardous Waste Treatment and Storage Facility at the Idaho Nuclear Technology and Engineering Center (INTEC), located at the Idaho National Engineering and Environmental Laboratory (INEEL), which is located in Butte County, Idaho.

The Permittee shall comply with all of the terms and conditions of this Partial-Permit (Permit) and Attachments 1 through 9 of this Permit. The Permittee shall comply with all applicable state regulations, including IDAPA 58.01.05.004 through 58.01.05.013 [40 Code of Federal Regulations (CFR), Parts 124, 260 through 266, 268, and 270], and as specified in this Permit.

Applicable state regulations are those which are in effect on the date of final administrative disposition of this Permit and any self-implementing statutory provisions and related regulations which, according to the requirements of the Hazardous and Solid Waste Amendments (HSWA), are automatically applicable to the Permittee's hazardous waste management activities, notwithstanding the conditions of this Permit.

This Permit is based upon the administrative record, as required by IDAPA 58.01.05.013 [40 CFR § 124.9]. The Permittee's failure (in the Application or during the permit-issuance process) to fully disclose all relevant facts or the Permittee's misrepresentation of any relevant facts, at any time, shall be grounds for the termination or modification of this Permit, and/or initiation of an enforcement action, including criminal proceedings. The Permittee must inform the Director of the Idaho Department of Environmental Quality (DEQ), hereinafter referred to as "Director," of any deviation from the permit conditions or changes in the information on which the Application is based, which would affect the Permittee's ability to comply or actual compliance with the applicable regulations or permit conditions, or which alters any permit condition in any way. The Director shall enforce all conditions of this Permit, which are designated in this Permit as state requirements. Any challenges of any permit condition that concern requirements shall be appealed to the Director, in accordance with IDAPA 58.01.05.996 and the Idaho Department of Environmental Quality Rules and Regulations 58.05.03.000 *et seq.*, "Rules Governing Contested Cases and Declaratory Rulings."

The United States Environmental Protection Agency (EPA) shall maintain an oversight role of the state-authorized program and in such capacity, shall enforce any permit condition based on state requirements if, in the EPA's judgment, the Director should fail to enforce that permit

condition. Any challenges to the EPA-enforced conditions shall be appealed to EPA, in accordance with 40 CFR § 124.19.

This Permit is effective as of **October 18, 2004** and shall remain in effect until **October 18, 2014** unless, in accordance with IDAPA 58.01.05.012, the Permit is revoked and reissued [40 CFR § 270.41], modified [40 CFR § 270.42, Appendix A.6], terminated [40 CFR § 270.43], or continued [40 CFR § 270.51].

September 16, 2004
Date

Toni Hardesty, Director
Department of Environmental Quality

TABLE OF CONTENTS

INTRODUCTION AND SIGNATURE PAGE 1
TABLE OF CONTENTS 3
LIST OF ATTACHMENTS 5
LIST OF PERMIT APPENDICES 6
DEFINITIONS 8
ACRONYMS AND ABBREVIATIONS 11
MODULE I - STANDARD PERMIT CONDITIONS 14
I.A. EFFECT OF PERMIT 14
I.B. ENFORCEABILITY 14
I.C. OTHER AUTHORITY 15
I.D. PERMIT ACTIONS 15
I.E. SEVERABILITY 15
I.F. DUTIES TO COMPLY 16
I.G. DUTY TO REAPPLY 16
I.H. PARTIAL PERMIT EXPIRATION 16
I.I. CONTINUATION OF EXPIRING PERMIT 16
I.J. NEED TO HALT OR REDUCE ACTIVITY NOT A DEFENSE 17
I.K. DUTY TO MITIGATE 17
I.L. PROPER OPERATION AND MAINTENANCE 17
I.M. DUTY TO PROVIDE INFORMATION 17
I.N. INSPECTION AND ENTRY 17
I.O. MONITORING AND RECORDS 18
I.P. REPORTING PLANNED CHANGES 19
I.Q. REPORTING ANTICIPATED NONCOMPLIANCE 19
I.R. CERTIFICATION OF CONSTRUCTION OR MODIFICATION 19
I.S. TRANSFER OF PERMIT 20
I.T. REPORTING 20
I.U. OTHER NONCOMPLIANCE 22
I.V. OTHER INFORMATION 22
I.W. SIGNATORY REQUIREMENT 22
I.X. CONFIDENTIAL INFORMATION 22
I.Y. REPORTS, NOTIFICATIONS, AND SUBMISSIONS 22
I.Z. DOCUMENTS TO BE MAINTAINED AT THE FACILITY 23
MODULE II - GENERAL FACILITY CONDITIONS 24
II.A. DESIGN AND OPERATION OF FACILITY 24
II.B. RECEIPT OF OFF-SITE WASTE 24
II.C. WASTE ANALYSIS PLAN 24
II.D. SECURITY 25
II.E. INSPECTION PLAN 26
II.F. TRAINING PLAN 26
II.G. PREPAREDNESS AND PREVENTION 27

II.H. CONTINGENCY PLAN 27
II.I. MANIFEST SYSTEM 29
II.J. RECORD KEEPING AND REPORTING 29
II.K. CLOSURE 30
II.L. EQUIVALENT MATERIALS/INFORMATION 32
II.M. AIR EMISSION STANDARDS FOR PROCESS VENTS 32
II.N. FINANCIAL ASSURANCE FOR FACILITY CLOSURE 34
II.O. LIABILITY INSURANCE FOR SUDDEN ACCIDENTAL OCCURRENCES 34
II.P. COMPLIANCE SCHEDULE 34
II.Q. RISK ANALYSIS VALIDATION 35

MODULE III - CONTAINER STORAGE 36

III.A. PERMITTED CONTAINER STORAGE 36
III.B. PERMITTED AND PROHIBITED WASTES IN THE CONTAINER STORAGE AREAS 36
III.C. CONDITION OF CONTAINERS 36
III.D. COMPATIBILITY OF WASTE WITH CONTAINERS 36
III.E. MANAGEMENT OF CONTAINERS 36

MODULE IV - STORAGE IN TANKS 38

IV.A. TANK STORAGE 38
IV.B. PERMITTED AND PROHIBITED WASTES IN THE INTEC LIQUID WASTE MANAGEMENT SYSTEM UNITS 59
IV.C. SECONDARY CONTAINMENT AND CONTAINMENT SYSTEM SUMPS 60
IV.D. TANK SYSTEM OPERATING CONDITIONS 63
IV.E. INSPECTION SCHEDULES AND PROCEDURES 68
IV.F. IGNITABLE OR REACTIVE WASTES 69
IV.G. INCOMPATIBLE WASTE 69

MODULE V - TREATMENT IN TANKS 70

V.A. SOLIDS SETTLING, CHEMICAL ADDITION, WASTE BLENDING AND PH ADJUSTMENT 70
V.B. PERMITTED/PROHIBITED WASTE TO BE TREATED 71
V.C. RECORD KEEPING 71

MODULE VI - MISCELLANEOUS TREATMENT 73

VI.A. TREATMENT BY DISTILLATION, EVAPORATION, OR STEAM REFORMING 73
VI.B. PERMITTED AND PROHIBITED WASTE 73
VI.C. OPERATING CONDITIONS 75
VI.D. INSPECTIONS 79
VI.E. RECORD KEEPING AND REPORTING 79
VI.F. START OF STEAM REFORMER OPERATIONS 80
VI.G. CLOSURE 81

MODULE VII - CORRECTIVE ACTION 82

LIST OF ATTACHMENTS

The following documents are excerpts from the Permittee's Administrative Record, i.e., HWMA Permit Application, supplemental reports, and other documents contained in the Department's supporting file for the draft Permit. The listed documents are hereby incorporated, in their entirety, by reference into this Permit. The Director, as deemed necessary, modified specific language in the Attachments. These modifications are described in the Permit Conditions (Modules I through VI) and, thereby, supersede the language of the original attachment. If the language of the Permit conflicts with either the attachments or the original application, the language in the Permit shall prevail. These incorporated Attachments are enforceable conditions of this Permit, as modified by the specific permit condition(s).

ATTACHMENT 1 FACILITY DESCRIPTION, consisting of:

A. Part A – Exclusive of Photos
B. Section B – Facility Description
C. Section D – Process Information

ATTACHMENT 2 WASTE ANALYSIS PLAN, consisting of:

Section C – Waste Characteristics

ATTACHMENT 3 SECURITY

Section F-1 – Security

ATTACHMENT 4 INSPECTION SCHEDULE

Section F-2 – Inspection Schedule and Appendices F-1 through F-7

ATTACHMENT 5 TRAINING PLAN

Section H – Personnel Training

ATTACHMENT 6 PREPAREDNESS & PREVENTION

Sections F-3, F-4, and F-5 – Procedures to Prevent Hazards

ATTACHMENT 7 CONTINGENCY PLAN

Section G – Preparedness, Prevention, and Contingency Plan

ATTACHMENTS 8 and 8A CLOSURE PLANS

Section I – Closure Plan

ATTACHMENT 9 PERMIT MODIFICATION

Tracking Log

LIST OF PERMIT APPENDICES

APPENDIX I – CONCEPTUAL DESIGN FOR THE CPP-604 EMBEDDED LINES PROJECT, NOVEMBER 2003

APPENDIX II – DRAWING LIST

Including the following drawings:
Sheet 057807, Sheet 057808, Sheet 057812, Sheet 103171, Sheet 103180, Sheet 103530, Sheet 103544, Sheet 132358, Sheet 132359, Sheet 132361, Sheet 132376, Sheet 132377, Sheet 132378, Sheet 132379, Sheet 132380, Sheet 132381, Sheet 132382, Sheet 132383, Sheet 132390, Sheet 132391, Sheet 132392, Sheet 132393, Sheet 132394, Sheet 132395, Sheet 132396, Sheet 132397, Sheet 132444, Sheet 132445, Sheet 132446, Sheet 132466, Sheet 133376, Sheet 134619, Sheet 134620, Sheet 134621, Sheet 134622, Sheet 134623, Sheet 134624, Sheet 155069, Sheet 155070, Sheet 158768, Sheet 162748, Sheet 176263, Sheet 176265, Sheet 176301, Sheet 347791, Sheet 347796, Sheet 347798, Sheet 369374, Sheet 370862, Sheet 370863, Sheet 370864, Sheet 370865, Sheet 370866, Sheet 370867, Sheet 383716, Sheet 400814, Sheet 400815, Sheet 632451, Sheet 632452, Sheet 632483, Sheet 632484, Sheet 632340, Sheet 632503, Sheet 632504, Sheet 632512, Sheet 632513, Sheet 632830, Sheet 632831, Sheet 633652.

APPENDIX III – DIAGRAM LIST

Including the following diagrams:
Sheet 057498, Sheet 057499, Sheet 094276, Sheet 096156, Sheet 103308, Sheet 103589, Sheet 133400, Sheet 133401, Sheet 133402, Sheet 133406, Sheet 133407, Sheet 133408, Sheet 133409, Sheet 133410, Sheet 133411, Sheet 133412, Sheet 133413, Sheet 133417, Sheet 133418, Sheet 133420, Sheet 133423, Sheet 133424, Sheet 133425, Sheet 133426, Sheet 133427, Sheet 133428, Sheet 134251, Sheet 176274, Sheet 176275, Sheet 179009, Sheet 347791, Sheet 356596, Sheet 368921, Sheet 368922, Sheet 368923, Sheet 368924, Sheet 368925, Sheet 368926, Sheet 368927, Sheet 368928, Sheet 368929, Sheet 368930, Sheet 368931, Sheet 632359, Sheet 632750, Sheet 632752, Sheet 632753, Sheet 632754, Sheet 632757, Sheet 632759, Sheet 632760, Sheet 632779, Sheet 632780, Sheet 632792, Sheet 632793, 632797, Sheet 632798, Sheet 632799, Sheet 632801, Sheet 632821, Sheet 632822, Sheet 635083, Sheet 635084, Sheet 637285, Sheet 637293, Sheet 632756, Sheet 632762, Sheet 632763, Sheet 632764, Sheet 632765, Sheet 632766, Sheet 632782, Sheet 632783, Sheet 632787, Sheet 632788, Sheet 638790, Sheet 632791

APPENDIX IV – FINAL REPORT FOR ORGANICS PARTITIONING RESULTING FROM OPERATION OF AN INTEC DOUBLE NEEDLE SAMPLER, REVISION 1, SEPTEMBER 2004

APPENDIX V – STANDARD DOUBLE NEEDLE SAMPLING PROTOCOL

APPENDIX VI – ENGINEERING DESIGN FILE (EDF)-1747, HYDRODYNAMIC AND STRUCTURAL ANALYSIS OF FLOOD HAZARDS AT CPP-659 DURING A PEAK FLOW IN THE BIG LOST RIVER

APPENDIX VII – EDF-2613, HYDRODYNAMIC AND STRUCTURAL ANALYSIS OF FLOOD HAZARDS AT THE PEWE AND LET&D BUILDINGS DURING A PEAK FLOW IN THE BIG LOST RIVER

APPENDIX VIII – EDF-2470, ANALYSIS OF HYDROSTATIC FORCES ON INTEC LIQUID WASTE TANKS DURING A 100-YEAR FLOOD

APPENDIX IX – ETS MERCURY CONCENTRATION JUSTIFICATION

APPENDIX X – PILOT PLANT REPORT FOR TREATING SODIUM-BEARING WASTE SURROGATES CARBONATE FLOWSHEET

DEFINITIONS

For the purposes of this Permit, the following definitions apply:

a. "Application" means the *HWMA/RCRA Part B Permit Application for the Idaho National Engineering and Environmental Laboratory, Volume 14, Idaho Nuclear Technology and Engineering Center (INTEC) Liquid Waste Management System, Books 1 through 4, Revision 2, October 2003*, the subsequent clarifying data received January 29, 2004, the Class 3 Permit modification Request dated March 29, 2005, the Class 3 Permit Modification Request dated August 21, 2006, and the revised Class 3 Permit Modification Request, including Notice of Deficiency Response dated December 7, 2006. All references to RCRA in the December 7, 2006 revised Class 3 Modification Request shall mean HWMA/RCRA.

b. "CERCLA" means the Comprehensive Environmental Response, Compensation, and Liability Act of 1980, as amended by the Superfund Amendments and Reauthorization Act of 1986.

c. "Days" means calendar day(s) unless otherwise specified. Any requirement of submittal under the terms of this Permit that would be due on a Saturday, Sunday, or a federal or state holiday shall be due on the following business day.

d. "Department" means the Idaho Department of Environmental Quality.

e. "Dike" means an embankment or ridge of either natural or man-made materials used to prevent the movement of liquids, sludges, solids, or other materials.

f. "Director" means the Director of the Department of Environmental Quality, or their designee, or authorized representative.

g. "Discovery (discovered)" means the initial identification of a SWMU or other Area of Concern, which has the potential to release hazardous waste or hazardous waste constituents to the environment.

h. "DOE" means the United States Department of Energy.

i. "Distillation Operation" means an operation, either batch or continuous, separating one or more feed stream(s) into two (2) or more exit streams, each exit stream having component concentrations different from those in the feed stream(s). The separation is achieved by the redistribution of the components between the liquid and vapor phase as they approach equilibrium within the distillation unit. The Process Equipment Waste Evaporator (PEWE) System, the Liquid Effluent Treatment and Disposal (LET & D) System, and the Evaporator Tank System (ETS) qualify as distillation operations.

j. "Facility" means all contiguous land, structures, other appurtenances, and improvements under the control of the Department of Energy at the Idaho National Laboratory, for a total of approximately 890 square miles or 601,260 acres.

k. "Failure" means the inability to achieve a desired end product on the first attempt, or improperly functioning/leaking equipment.

l. "Fractionation Operation" means a distillation operation or method used to separate a mixture of several volatile components of different boiling points in successive stages, each stage removing from the mixture some proportion of one of the components. The LET & D Facility, which recovers nitric acid from the PEWE overhead condensate, is referred to operationally as fractionation but qualifies as a distillation operation.

m. "HSWA" means the Hazardous and Solid Waste Amendments of 1984.

n. "HWMA" means the State of Idaho Hazardous Waste Management Act of 1983, as amended.

o. "Hazardous Waste Management Unit (HWMU)" means those operable units subject to the requirements of IDAPA 58.01.05.012 (40 CFR § 270.14 to 270.29).

p. "IDAPA" means the Idaho Administrative Procedures Act, Chapter 52, Title 67, Idaho Code.

q. "INL" means the Idaho National Laboratory, the Facility. The INL was formerly known as the Idaho National Engineering and Environmental Laboratory (INEEL).

r. "Mixed Waste" means waste that is both hazardous and radioactive.

s. "Off-Site" means off the "facility" as defined in "j" of this definition section.

t. "On-Site" means on the "facility" as defined in "j" of this definition section.

u. "Open-ended valve, line or pipe" means any valve, except pressure relief valves, having one side of the valve seat in contact with hazardous waste and one side open to the atmosphere, either directly or through an open pipe.

v. "Operator" means the DOE-designated Contractor that has operational responsibilities and control of the HWMU. The DOE-designated Contractor, as operator for INL, is CH2M WG Idaho, LLC (CWI). CWI reports to the DOE-ID.

w. "Owner" means the United States Department of Energy (DOE).

x. "Permittee" means both DOE, as owner, and the DOE-designated Contractor.

y. "Process Vent" means any open-ended pipe or stack that is vented to the atmosphere either directly, through a vacuum-producing system, or through a tank (e.g., distillate receiver, condenser, bottoms receiver, surge control tank, separator tank, or hot well) associated with hazardous waste distillation, fractionation, thin-film evaporation, solvent extraction, or air or steam stripping operations.

z. "RCRA" means the Resource Conservation and Recovery Act of 1976, as amended in 1984.

aa. "Readily retrievable" shall mean available upon request from the Director, given the following: 1) Provided to the Director within one working day if the document is less than three years old, and 2) Provided to the Director within seven working days if the document is greater than three years old.

bb. "Reforming" means the decomposition of nitrogen or organic compounds by heat (e.g. steam reforming) or catalyst. The chief cracking reactions are decomposition of nitrogen oxides and the dehydrogenation of organics (methane + water yields hydrogen gas + carbon monoxide)

cc. "Release" means any spilling, leaking, pouring, emitting, emptying, discharging, injecting, pumping, escaping, leaching, dumping, or disposing of hazardous and/or mixed wastes (including the abandonment or discarding of barrels, containers, and other closed receptacles containing hazardous and/or mixed wastes or hazardous and/or mixed waste constituents).

dd. "Shutdown" means eliminating the feed and/or steam into a unit.

ee. "Solid Waste Management Unit" (SWMU) means any discernable unit at which solid wastes have been placed at any time, irrespective of whether the unit was intended for the management of solid or hazardous wastes. Such units include any area at a facility at which solid wastes have been routinely and systematically released.

ff. "Tank" means a stationary device, designed to contain an accumulation of hazardous waste, which is constructed primarily of non-earthen materials (e.g., wood, concrete, steel, plastic), which provide structural support.

All definitions contained in IDAPA 58.01.05.004, .005, .008, and .010 through .013 (40 CFR Parts 260, 261, 264, 266, 268, 270, and 124) are hereby incorporated (in their entirety) by reference into this Permit, except that any of the definitions used above shall supersede any definition of the same term given in IDAPA 58.01.05.000 et seq. Where terms are not defined in the regulations or the Permit, the meaning associated with such terms shall be defined by a standard dictionary reference or the generally accepted scientific or industrial meaning of the term.

ACRONYMS AND ABBREVIATIONS

ACMM	Analytical Chemistry Methods Manual
AE	Architectural Engineer
ALARA	As low as reasonably achievable (radiation exposures)
API	American Petroleum Institute
APS	Atmospheric Protection System
ASME	American Society of Mechanical Engineers
ASTM	American Society for Testing and Materials
CERCLA	Comprehensive Environmental Response, Compensation and Liability Act
CFA	Central Facilities Area
CFR	Code of Federal Regulations
COPC	Compound of Potential Concern
CPP	Chemical Processing Plant
CRR	Carbon Reduction Reformer
DCS	Distributed Control System
DEQ	Department of Environmental Quality
DMR	Denitration and Mineralization Reformer
DOE	Department of Energy
DOE-HQ	Department of Energy - Headquarters
DOE-ID	Department of Energy - Idaho Operations Office
DOT	Department of Transportation
DQO	Data Quality Objective
EAL	Emergency Action Level
EAM	Emergency Action Manager
EC	Emergency Coordinator
ED	Emergency Director
EDF	Engineering Design File
EDMS	Electronic Document Management System
EMCAP	Environmental Management Consolidated Audit Program
EOC	Emergency Operations Center
EP/RCRA CP	Emergency Plan, RCRA Contingency Plan
EPA	(United States) Environmental Protection Agency
EPCRA	Emergency Planning and Community Right-To-Know Act
ERO	Emergency Response Organization
ERPG	Emergency Response Planning Guideline
ETS	Evaporator Tank System
FFA/CO	Federal Facilities Agreement/Consent Order
FR	Facility Representative (WGS)
g	gram
GERT	General Employee Radiation Training
HEPA	High-Efficiency Particulate Air
HLLWE	High Level Liquid Waste Evaporator (ETS)
HQ	Hazard Quotient

HSWA	Hazardous and Solid Waste Amendments of 1984
HWMA	Hazardous Waste Management Act of 1983, as amended
HWMU	Hazardous Waste Management Unit
HWN	Hazardous Waste Number
ICDF	INL CERCLA Disposal Facility
IDAPA	Idaho Administrative Procedures Act
ILWMS	INTEC Liquid Waste Management System
INL	Idaho National Laboratory
INEEL	Idaho National Engineering and Environmental Laboratory
INTEC	Idaho Nuclear Technology and Engineering Center
"	Inch(es)
IWTS	Integrated Waste Tracking System
IWTU	Integrated Waste Treatment Unit
LDR	Land Disposal Restrictions
LET&D	Liquid Effluent Treatment and Disposal
LRA	Level Recorder Alarm
M&O	Management and Operating
MOU	Memorandum of Understanding
MSDS	Material Safety Data Sheet
NWCF	New Waste Calcining Facility
No.	Number
NRC	Nuclear Regulatory Commission
OJT	On-the-Job Training
OSC	On-Scene Commander
OSHA	Occupational Safety and Health Administration
P&ID	Piping and Instrumentation Diagram
PAG	Protective Action Guide
PE	Professional Engineer
PEW	Process Equipment Waste
PEWE	Process Equipment Waste Evaporator
PIR	Product of Incomplete Reaction
PK	Process Knowledge
POG	Process Off-gas
PPE	Personal Protective Equipment
ppm	parts per million
PWL	Process Waste Liquid
QA/QC	Quality Assurance/ Quality Control
RAL	Remote Analytical Laboratory
RCRA	Resource Conservation and Recovery Act
RGP	Rare Gas Plant
RSS	Rapid Shutdown System
SAT	Systematic Approach to Training
SLRA	Screening Level Risk Assessment
SCBA	Self-Contained Breathing Apparatus
SVOC	Semi-Volatile Organic Constituents

SW-846	Test Methods for Evaluating Solid Waste: Physical/Chemical Methods
SWMU	Solid Waste Management Unit
TBP	Tributyl Phosphate
TCLP	Toxicity Characteristic Leaching Procedure
TFF	Tank Farm Facility
TFT	Tank Farm Tanks
TOC	Total Organic Carbon
TSDF	Treatment, Storage, and Disposal Facility
TSS	Total Suspended Solids
UHC	Underlying Hazardous Constituent
USGS	United States Geological Survey
UTS	Universal Treatment Standards
VOC	Volatile Organic Constituents
VOG	Vessel Off-Gas
WAC	Waste Acceptance Criteria
WAP	Waste Analysis Plan
WC	Water Column
WCC	Warning Communications Center
WDDF	Waste Determination and Disposition Form
WGS	Waste Generator Services
WTS	Waste Technical Specialist

MODULE I - STANDARD PERMIT CONDITIONS

I.A. EFFECT OF PERMIT

The Permittee is allowed to store and treat mixed waste in the Idaho Nuclear Technology and Engineering Center Liquid Waste Management System (ILWMS) in accordance with the conditions of this Partial-Permit. Any storage or treatment of mixed waste in the Hazardous Waste Management Units (HWMU) described herein, not authorized in this Permit, is prohibited.

Pursuant to IDAPA 58.01.05.012 [40 CFR § 270.4], compliance with this Permit generally constitutes compliance (for purposes of enforcement) with the Idaho Hazardous Waste Management Act (HWMA) of 1983, as amended, except for the requirements not included in this Permit, which become effective by future statute or regulatory changes, to include those requirements promulgated under IDAPA 58.01.05.011 [40 CFR Part 268] restricting the placement of hazardous and/or mixed waste in or on the land. Issuance of this Permit does not convey any property rights of any sort or any exclusive privilege; nor does it authorize any injury to persons or property, any invasion of other private rights, or any infringement of state or local law or regulations, as specified in IDAPA 58.01.05.012 [40 CFR § 270.4].

I.A.1. The Department of Energy (DOE) is the owner and is responsible for the activities that include policy, programmatic, funding, and scheduling decisions, as well as general oversight.

I.A.2. The DOE-designated contractor, as operator, is responsible for the day-to-day operations of the assigned permitted units and for all permitted activities related to the assigned units, for which the DOE-designated contractor, its agents, employees, or subcontractors have operational control including waste characterization and handling, monitoring, record keeping, reporting, and contingency planning.

I.B. ENFORCEABILITY

The terms and conditions of this Permit are enforceable pursuant to the HWMA or any other applicable federal, state, or local law. Violations of this Permit may result in civil penalties, in accordance with the HWMA (Idaho Code § 39-4414) and the HWMA Civil Penalty Policy.

I.B.1. Any person who knowingly makes any false statement or representation in any application, label, manifest, record, report, permit, or other document filed, maintained, or used for the purposes of complying with the provisions of Idaho Code § 39-4415 shall be guilty of a misdemeanor and subject to a fine of not more than ten thousand dollars ($10,000) or imprisonment not to exceed one (1) year, or both, for each separate violation or for each day of a continuing violation.

I.C. OTHER AUTHORITY

The Department expressly reserves any right of entry provided by law and any authority to order or perform emergency or other response activities as authorized by law.

I.D. PERMIT ACTIONS

I.D.1. This Permit may be modified, revoked and reissued, or terminated for cause as specified in IDAPA 58.01.05.012 [40 CFR §§ 270.41, 270.42, or 270.43].

I.D.2. The filing of a request for a Permit Modification, revocation and reissuance, or termination, or the notification of planned changes, or anticipated noncompliance on the part of the Permittee does not stay the applicability or enforceability of any permit condition.

I.D.3. The Director may modify this Permit when the standards or regulations on which the Permit was based have been changed by statute, amended standards or regulations, or by judicial decision after the effective date of this Permit.

I.D.4. Except as provided by specific language in this Permit or except for the Director's approval of a Class 1 or 2 Permit Modification, in accordance with IDAPA 58.01.05.012 [40 CFR § 270.42(a) and (b)], any modifications which substantially alter INL or its operation as covered by this Permit shall be administered as a Class 3 Permit Modification prior to such change taking place, in accordance with IDAPA 58.01.05.012 [40 CFR § 270.42(c)].

I.D.5. Within forty five (45) days of a Permit Modification being put into effect or approved, the Permittee shall provide clean copies of the relevant portions of the Permit and Attachments to incorporate the change (if not already reflected/provided in the change pages submitted with the Permit Modification Request), reprint the documents (as necessary), and submit them to the Director.

I.D.6. The Permittee shall ensure that Attachment 9 is current, consistent with Permit Condition I.D.5.

I.E. SEVERABILITY

The provisions of this Permit are severable; and if any provision of this Permit or the Application of any provision of this Permit to any circumstance is held invalid, the Application of such provision to other circumstances and the remainder of this Permit shall not be affected thereby. Invalidation of any state or federal statutory or regulatory provision, which forms the basis for any condition of this Permit, does not affect the validity of any other state or federal statutory or regulatory basis for said provision.

I.F. DUTIES TO COMPLY

I.F.1. The Permittee shall comply with all conditions of this Permit, except to the extent and for the duration such noncompliance is authorized by an Emergency Permit issued in accordance with IDAPA 58.01.05.012 [40 CFR § 270.61]. Any permit noncompliance, other than noncompliance authorized by an Emergency Permit, constitutes a violation of HWMA and is grounds for enforcement action or permit termination, revocation and reissuance, or modification of the Permit, or denial of a Permit Renewal Application as specified in IDAPA 58.01.05.012 [40 CFR § 270.30(a)].

I.F.2. Compliance with the terms of this Permit does not constitute a defense to any order issued or any action brought under §§ 3007, 3008, 3013, or 7003 of RCRA [42 U.S.C. §§ 6927, 6928, 6934 and 6973], §§ 104, 106(a), or 107 of CERCLA [42 U.S.C. §§ 9604, 9606(a), or 9607], as amended by the Superfund Amendments and Reauthorization Act of 1986, or any other state or federal law providing for protection of public health or the environment from any imminent and substantial endangerment to human health or the environment.

I.G. DUTY TO REAPPLY

If the Permittee wishes to continue an activity allowed by this Permit after the expiration date of this Permit, the Permittee shall submit a new Application a minimum of one hundred eighty (180) calendar days prior to the expiration of this Permit, in accordance with IDAPA 58.01.05.012 [40 CFR §§ 270.10(h) and 270.30(b)].

I.H. PARTIAL PERMIT EXPIRATION

Except as renewed, modified, revoked, reissued, or terminated by the Department, this Permit shall automatically expire ten (10) years from the effective date of this Permit.

I.I. CONTINUATION OF EXPIRING PERMIT

This Permit and all conditions herein shall continue in force until the effective date of a new permit, if the Permittee has submitted a timely and complete Application, in accordance with IDAPA 58.01.05.012 [40 CFR § § 270.10, 270.13 through 270.29], and through no fault of the Permittee, the Director has neither issued or denied a new permit under IDAPA 58.01.05.013 [40 CFR § 124.15] on or before the expiration date of this Permit.

I.J. NEED TO HALT OR REDUCE ACTIVITY NOT A DEFENSE

It shall not be a defense for the Permittee in an enforcement action that it would have been necessary to halt or reduce the permitted activity in order to maintain compliance with the conditions of this Permit, as specified in IDAPA 58.01.05.012 [40 CFR § 270.30(c)].

I.K. DUTY TO MITIGATE

In the event of noncompliance with this Permit, the Permittee shall take all reasonable steps to minimize releases to the environment resulting from the noncompliance, and shall carry out such measures as are reasonable to prevent significant adverse impacts on human health or the environment, in accordance with IDAPA 58.01.05.012 [40 CFR § 270.30(d)].

I.L. PROPER OPERATION AND MAINTENANCE

The Permittee shall, at all times, properly operate and maintain all facilities and controls (and related appurtenances), which are installed or used by the Permittee to achieve compliance with the conditions of this Permit. Proper operation and maintenance includes effective performance, adequate funding, adequate operator staffing and training, and adequate laboratory and process controls, including appropriate quality assurance procedures. This provision requires the operation of back-up or auxiliary equipment or similar systems only when necessary to achieve compliance with the conditions of this Permit, in accordance with IDAPA 58.01.05.012 [40 CFR § 270.30(e)].

I.M. DUTY TO PROVIDE INFORMATION

The Permittee shall furnish to the Department and/or the Director, within a reasonable time, any relevant information which the Department and/or the Director may request to determine whether cause exists for modifying, revoking and reissuing, or terminating this Permit, or to determine compliance with this Permit. The Permittee shall also furnish to the Department and/or the Director, upon request, copies of records required to be kept by this Permit, in accordance with IDAPA 58.01.05.012 [40 CFR § 270.30(h)].

I.N. INSPECTION AND ENTRY

Pursuant to IDAPA 58.01.05.012 [40 CFR § 270.30(i)], the Permittee shall allow the Department, the Director, and/or their authorized officers, employees, or representatives (upon the presentation of credentials and other documents as may be required by law) to:

I.N.1. Enter at reasonable times upon the Permittee's premises where a regulated facility or activity is located or conducted, or where records are kept as required by the conditions of this Permit;

I.N.2. Have access to and copy, at reasonable times, any records that are kept as required by the conditions of this Permit;

I.N.3. Inspect at reasonable times any portion of the facility, equipment (including monitoring and control equipment), practices, or operations regulated or required under this Permit; and

I.N.4. Sample or monitor at reasonable times, for the purposes of assuring permit compliance or as otherwise authorized by the HWMA or RCRA, any substances or parameters at any location.

I.O. MONITORING AND RECORDS

I.O.1. The Permittee shall retain copies of all reports required by this Permit, the certification required by IDAPA 58.01.05.008 and .012 [40 CFR §§ 264.73(b)(9) and 270.30(j)(2)], and records of all data used to complete the Application for this Permit for a period of at least three (3) years from the date of the report, record, or certification unless a longer retention period for certain information is required by other conditions of this Permit.

I.O.2. Pursuant to IDAPA 58.01.05.012 [40 CFR § 270.30(j)(3)], records of monitoring information shall specify:

I.O.2.a. The date(s), exact place, and times of sampling or measurements;

I.O.2.b. The name(s) of individuals who performed the sampling or measurements;

I.O.2.c. The date(s) analyses were performed;

I.O.2.d. The name(s) of individuals who performed the analyses;

I.O.2.e. The analytical techniques or methods used; and

I.O.2.f. The results of such analyses, including the Quality Assurance/Quality Control summary.

I.O.3. Samples and measurements taken for the purpose of monitoring shall be representative of the monitored activity, in accordance with IDAPA 58.01.05.012 [40 CFR § 270.30(j)(1)]. The method used to obtain a representative sample of the waste to be analyzed shall be the appropriate method from IDAPA 58.01.05.005 [40 CFR Part 261, Appendix I], or an equivalent method approved by the Director.

Laboratory methods shall be those specified in Test Methods for Evaluating Solid Waste: Physical/Chemical Methods SW-846, Standard Methods for the Examination of Water and Wastewater (prevailing edition), or other alternate methods approved in this Permit, or an equivalent method in accordance with Permit Condition I.O.4. of this Permit.

I.O.4. The Permittee may substitute analytical methods, which are equivalent or superior to those specifically approved for use in this Permit, in accordance with the following:

I.O.4.a. The Permittee submits to the Director a request for substitution of analytical method(s) specifically approved for use in this Permit. The request shall provide information demonstrating that the proposed method(s) requested to be substituted are equivalent or superior in terms of sensitivity, accuracy, and precision (i.e., reproducibility); and

I.O.4.b. The Permittee receives a written approval from the Director for the substitution of analytical method(s). Such approval shall not require a Permit Modification under IDAPA 58.01.05.012 [40 CFR § 270.42].

I.P. REPORTING PLANNED CHANGES

The Permittee shall give notice as soon as possible to the Director of any planned physical alteration or additions to the permitted facility, in accordance with IDAPA 58.01.05.012 [40 CFR § 270.30(l)(1)].

I.Q. REPORTING ANTICIPATED NONCOMPLIANCE

The Permittee shall give advance notice to the Director of any planned changes in the permitted facility or activity, which may result in noncompliance with requirements of this Permit, in accordance with IDAPA 58.01.05.012 [40 CFR § 270.30(l)(2)]. Advance notice shall not constitute a defense for any noncompliance.

I.R. CERTIFICATION OF CONSTRUCTION OR MODIFICATION

I.R.1. The Permittee may not commence storage or treatment of mixed waste in a new permitted HWMU or in a modified portion of an existing permitted HWMU, except as provided in IDAPA 58.01.05.012 [40 CFR § 270.42], until the Permittee has submitted to the Director by certified mail, express mail, or hand-delivered letter, along with the Attachments required under Permit Condition II.A.2., signed by the Permittee, and a registered professional engineer certifying that the permitted unit(s) at INL have been constructed or modified, in accordance with the approved plans and specifications in compliance with this Permit (IDAPA 58.01.05.012 [40 CFR § 270.30(l)]); and

I.R.2. The Director has reviewed and inspected (if deemed appropriate) the modified or newly constructed unit(s), and has notified the Permittee in writing that the unit(s) were found in compliance with the conditions of this Permit; or

I.R.3. If within fifteen (15) calendar days after the date of submission of the letter, in Permit Condition I.R.1. of this Permit, the Permittee has not received notice from the Director of the intent to inspect, prior inspection is waived; and the Permittee may commence storage or treatment of hazardous and mixed waste in the permitted unit(s), certified in accordance with Permit Condition I.R.1. of this Permit.

I.S. TRANSFER OF PERMIT

This Permit shall be transferred to a new owner or operator only if it is modified or revoked and reissued, pursuant to IDAPA 58.01.05.012 [40 CFR § 270.40]. Prior to transferring ownership or operation of the facility during its operating life, the Permittee shall notify the new owner or operator, in writing, of the requirements of IDAPA 58.01.05.008 and 58.01.05.012 [40 CFR Parts 264 and 270] and this Permit.

I.T. REPORTING

I.T.1. In accordance with IDAPA 58.01.05.012 [40 CFR § 270.30(l)(6)], the Permittee shall verbally report to the Idaho State Communications Center any noncompliance with this Permit, which may endanger human health or the environment, within twenty-four (24) hours from the time the Permittee becomes aware of the noncompliance, including:

I.T.1.a. Noncompliance with Permit Condition II.A.1. of this Permit; or

I.T.1.b. Information concerning a release of any mixed waste that may endanger public drinking water supplies; or

I.T.1.c. A release or discharge of mixed waste, or of a fire or explosion at the INL that could threaten human health or the environment outside the facility.

I.T.2. The description of the occurrence and its cause shall, at a minimum, include:

- Name, title, and telephone number of the individual reporting;
- Name, address, and telephone number of the owner or operator;
- Name, address, and telephone number of the facility;
- Date, time, and type of incident;
- Location and cause of the accident;
- Name and quantity of materials involved;
- The extent of injuries, if any;
- An assessment of actual or potential hazards to the environment and human health, where this is applicable;
- Description of any emergency action taken to minimize possible threat(s) to human health and the environment;

- Estimated quantity and disposition of recovered material that resulted from the incident; and
- Any other information necessary to evaluate the situation fully, and to develop an appropriate course of action.

I.T.3. Within five (5) calendar days after the Permittee is required to provide verbal notification, as specified in Permit Condition I.T.1. of this Permit, the Permittee shall provide to the Director a written submission.

I.T.3.a. The written submission shall include, but not be limited to, the following:

- Name, address, and telephone number of the individual reporting;
- A description (include cause, location, extent of injuries (if any), and an assessment of actual or potential hazard(s) to the environment and human health outside the INL, where this is applicable) of the incident (noncompliance and/or release);
- The period(s) in which the incident (noncompliance and/or release) occurred (including exact dates and times);
- Whether the results of the incident remain a threat to human health and the environment (whether the noncompliance has been corrected and/or the release has been adequately remediated); and
- If not, the anticipated time it is expected to continue and the steps taken or planned to reduce, eliminate, and prevent re-occurrence of the noncompliance, and/or the steps taken or planned to adequately remediate the release.

I.T.4. The Permittee need not comply with the five (5) calendar day written notice requirement, if the Director waives the requirement and the Permittee submits a written report within fifteen (15) calendar days from the time the Permittee is required to provide verbal notification, as specified in Permit Condition I.T.1. of this Permit.

I.T.5. If the facility stops operations in response to a fire, explosion, or release, a report must be submitted within 15 days that includes the following information:

- Name, title, and telephone number of the individual submitting the report;
- Date, time and type of incident;
- Location and suspected cause of the incident;
- Name and quantity of materials involved, if any;
- Any leaks, pressure buildup, gas generation, or ruptures in valves, pipes, or other equipment;
- All changes made to the operation of the facility to ensure that the event does not recur.

I.T.5.a. If the required information is provided electronically or verbally within 24 hours of the incident, DEQ, at its' discretion, may provide a written waiver of this reporting requirement.

I.U. OTHER NONCOMPLIANCE

The Permittee shall report, on a semi-annual basis from the effective date of the Permit, all other instances of noncompliance not otherwise required to be reported, in accordance with Permit Condition I.T. of this Permit, in accordance with IDAPA 58.01.05.012 [40 CFR § 270.30(l)(10)]. Reports shall be due on February 1 and August 1 of each year. The reports shall contain the information, as applicable, listed in Permit Condition I.T. of this Permit. Reporting shall not constitute a defense for any noncompliance.

I.V. OTHER INFORMATION

Whenever the Permittee becomes aware that any relevant information was omitted in the Permit Application or incorrectly submitted in the Permit Application, or in any report to the Director, the Permittee shall promptly submit such facts or information to the Director in accordance with Permit Condition I.Y. of this Permit, and in accordance with IDAPA 58.01.05.012 [40 CFR § 270.30(l)(11)].

I.W. SIGNATORY REQUIREMENT

All applications, reports, or information requested by or submitted to the Director shall be signed and certified, in accordance with IDAPA 58.01.05.012 [40 CFR § 270.11] and submitted in accordance with Permit Condition I.Y.

I.X. CONFIDENTIAL INFORMATION

Pursuant to Title 9, Chapter 3, of the Idaho Code, IDAPA 58.01.05.012 [40 CFR § 270.12] or any other applicable federal, state, or local law, the Permittee may assert a claim of confidentiality regarding any information required to be submitted pursuant to this Permit. The Department shall determine whether said information is exempt from disclosure, pursuant to applicable law.

I.Y. REPORTS, NOTIFICATIONS, AND SUBMISSIONS

All reports, notifications, or other submissions, which are required by this Permit and IDAPA 58.01.05.012 [40 CFR § 270.5], shall be sent or given to the Director in duplicate by certified mail, express mail, or hand-delivered to:

Director
c/o Hazardous Waste Program Manager
Department of Environmental Quality
1410 North Hilton
Boise, Idaho 83706-1255
Telephone No. (208) 373-0502

Twenty-four (24) hour telephone number 1-800-632-8000

The addresses and telephone numbers listed above are current as of the effective date of this Permit and may be subject to change.

I.Z. DOCUMENTS TO BE MAINTAINED AT THE FACILITY

I.Z.1. The Permittee shall maintain until closure is completed and certified by an independent, registered, professional engineer, the following documents and amendments, and revisions or modifications to these documents:

I.Z.1.a. A complete copy of this Permit including attachments and tables;

I.Z.1.b. Waste Analysis Plan(s) for each HWMU of this Permit, as required by IDAPA 58.01.05.008 [40 CFR § 264.13] and this Permit;

I.Z.1.c. Operating Record, as required by IDAPA 58.01.05.008 [40 CFR § 264.73] and this Permit;

I.Z.1.d. Inspection procedures, schedules, logs, and records for each HWMU of this Permit, as required by IDAPA 58.01.05.008 [40 CFR §§ 264.15(b)(2), 264.73(b)(5)] and this Permit;

I.Z.1.e. Personnel training requirements for each position, and personnel training records for each individual involved with management or treatment of mixed waste at each HWMU in this Permit, as required by IDAPA 58.01.05.008 [40 CFR § 264.16(d)] and this Permit;

I.Z.1.f. The Site-wide Contingency Plan and Contingency Plan(s) for each HWMU of this Permit, as required by IDAPA 58.01.05.008 [40 CFR § 264.53(a)] and this Permit;

I.Z.1.g. Closure Plan(s) for each HWMU of this Permit, as required by IDAPA 58.01.05.008 [40 CFR § 264.112(a)] and this Permit.

I.Z.2. Documents, as specified by this Permit, may be maintained at INTEC records storage, records storage in Idaho Falls, and/or Electronic Document Management System [EDMS] Records Vault in a readily retrievable manner. These documents may be maintained solely using an electronic format, as long as the documents are readily retrievable to obtain a printed copy.

MODULE II - GENERAL FACILITY CONDITIONS

II.A. DESIGN AND OPERATION OF FACILITY

II.A.1. The Permittee shall construct, maintain, and operate all permitted HWMUs on the INL to minimize the possibility of a fire, explosion, or any unplanned, sudden or non-sudden release of hazardous and mixed waste or hazardous and mixed waste constituents to the air, soil, ground water, or surface water which could threaten human health and/or the environment.

II.A.2. The Permittee shall construct and/or maintain all HWMUs in accordance with the approved designs, specifications, and maintenance schedules that are included as Attachments 1 through 9 of this Permit. Minor deviations from the approved designs or specifications, necessary to accommodate proper construction and the substitution of equivalent or superior materials or equipment, shall be noted on the As-built drawings and the rationale for those deviations shall be provided in narrative form. After completion of construction or modification of each new HWMU, the Permittee shall submit final As-built drawings and the narrative report to the Director as part of the construction certification documentation specified in Permit Condition I.R.

II.A.3. The Permittee shall comply with all applicable requirements of the Land Disposal Restrictions of IDAPA 58.01.05.011 [40 CFR Part 268].

II.A.4. The Permittee shall inspect all transfer lines from which there has been a release, suspected release, or unexplained volume of missing transferred waste, and for which a report was filed under the requirement of Permit Conditions I.T. or I.U. The suspect transfer lines shall not be returned to service until the integrity of the line has been demonstrated.

II.B. RECEIPT OF OFF-SITE WASTE

II.B.1. The Permittee shall not accept into the ILWMS mixed waste generated off-Site.

II.C. WASTE ANALYSIS PLAN

The Permittee shall comply with the procedures and requirements of the Waste Analysis Plan provisions, in accordance with IDAPA 58.01.05.008 and 58.01.05.011 [40 CFR §§ 264.13 and 268.7] and Attachment 2 of this Permit, and as follows:

II.C.1. The Permittee shall collect representative samples of waste to be analyzed in accordance with IDAPA 58.01.05.005, 58.01.05.008, and 58.01.05.011 [40 CFR Part 261, Appendix I and 40 CFR §§ 264.13(a) and 268.7], and as specified in Attachment 2 of this Permit.

II.C.2. The Permittee shall perform the analysis of each waste stream in accordance with the latest edition of Test Methods for Evaluating Solid Waste: Physical/Chemical Methods, EPA Publication SW-846, Standard Methods for the Examination of Water and Wastewater (prevailing edition), or equivalent method approved by the Director in accordance with Permit Condition I.O.3. and I.O.4. of this Permit. At a minimum, the Permittee shall maintain proper functional instruments, use-approved sampling and analytical methods, verify the validity of sampling and analytical procedures, and perform correct calculations. If the Permittee uses a contract laboratory to perform analyses, the Permittee shall notify the laboratory in writing of the waste analysis conditions it is to meet, in order that waste analysis conditions of the Permit are met.

II.C.3. The Director, based on data provided, approves the use of a double-needle sampler when collecting mixed waste volatile organic and total organic samples from the ILWMS.

II.C.3.a. Double-needle sampling results must not be used in Land Disposal Restriction certifications.

II.C.3.b. Analytical data obtained from double-needle sampling may be used for demonstrating compliance with IDAPA 58.01.05.008 [40 CFR Part 264 Subpart AA].

II.C.3.c. The appropriateness of the double-needle sampling procedures shall be re-confirmed by comparing the resulting analytical data results correlated with the off-gas data generated as part of the Permit Condition II.Q. requirements (required only if TOC concentration in the condensate collection tank exceeds 50 ppm).

II.C.3.c.1. The appropriateness of the double-needle sampling procedure shall be reconfirmed three or more times during the life of this permit.

II.C.3.c.2. If this comparison does not reconfirm the validity of the double-needle sampling procedure, the Permittee shall submit a Permit Modification Request, in accordance with Permit Condition I.D., within sixty days to revise the Waste Analysis Plan.

II.D. SECURITY

The Permittee shall comply with the Security Provisions of IDAPA 58.01.05.008 [40 CFR § 264.14] and the INL site-specific security measures described in Attachment 3 of this Permit.

II.E. INSPECTION PLAN

The Permittee shall comply with the inspection provisions of IDAPA 58.01.05.008 [40 CFR § 264.15] and as follows:

II.E.1. The Permittee shall maintain the inspection schedules and logs, in accordance with Permit Condition I.Z.1.d. and I.Z.2. of this Permit;

II.E.2. The Permittee shall comply with the inspection schedules and logs for the INL, as included in Attachment 4 of this Permit;

II.E.3. The Permittee shall remedy, as required by IDAPA 58.01.05.008 [40 CFR § 264.15(c)], any deterioration or malfunction discovered by an inspection;

II.E.4. The Permittee shall retain the inspection procedures, schedules, logs and records required by Permit Condition II.E.1., in accordance with Permit Condition I.Z.1.d. and I.Z.2. of this Permit;

II.E.5. The Permittee shall inspect the Cathodic Protection System for proper operation at least annually; and all sources of impressed current shall be inspected and/or tested bi-monthly, in accordance with IDAPA 58.01.05.008 [40 CFR § 264.195(g)].

II.E.6. The Permittee shall record inspections on the inspection logs and inspection log sheets, required by Permit Condition II.E.1., as specified in IDAPA 58.01.05.008 [40 CFR § 264.15(d)]. At a minimum, the following information shall be recorded:

- The date and time of the inspection;
- The name of the inspector;
- A notation of the observations made; and
- The date and nature of any repairs or other remedial actions.

II.E.7. The Permittee shall inspect the instrumentation found in Attachment 1 Section D of this permit, at a minimum, according to the Operations and Maintenance Schedule provided with the instrument list.

II.F. TRAINING PLAN

II.F.1. The Permittee shall comply with the INL Personnel Training Plan, as included in Attachment 5 of this Permit and in accordance with IDAPA 58.01.05.008 [40 CFR § 264.16], until each HWMU is fully closed and certified.

II.F.2. The Permittee shall ensure that all personnel who handle mixed waste are trained in mixed waste management, safety, and emergency procedures, as applicable to their

job description, in accordance with IDAPA 58.01.05.008 [40 CFR § 264.16(a)] and the Personnel Training Plan included in Attachment 5 of this Permit.

II.F.3. The Permittee shall maintain the Personnel Training Plan in Attachment 5 of this Permit and documentation of personnel training received, in accordance with IDAPA 58.01.05.008 [40 CFR § 264.16(e)] and Permit Condition I.Z.1.e. and I.Z.2. of this Permit.

II.G. PREPAREDNESS AND PREVENTION

The Permittee shall comply with the Preparedness and Prevention Provisions of IDAPA 58.01.05.008 [40 CFR Part 264 Subpart C] and as follows:

II.G.1. The Permittee shall operate the permitted INTEC Units so as to minimize the possibility of a fire, explosion, or sudden or non-sudden releases to the air or soil (which could threaten human health or the environment), in accordance with IDAPA 58.01.05.008 [40 CFR § 264.31] and Attachment 6 of this Permit.

II.G.2. At a minimum, the Permittee shall perform preventative maintenance and repair of the INL emergency equipment, safety devices, and miscellaneous equipment included in the Attachments of this Permit, in accordance with IDAPA 58.01.05.008 [40 CFR § 264.33] and the manufacturer's specifications. The Permittee shall maintain records of these preventative maintenance and repair activities on this equipment and schedules, reflecting minimum and planned performance of these preventative maintenance activities in the Operating Record at the facility, in accordance with Permit Condition I.Z.1.c and I.Z.2 of this Permit.

II.G.3. The Permittee shall maintain access to the communications and alarm systems, in accordance with IDAPA 58.01.05.008 [40 CFR § 264.34] and Attachment 6 of this Permit.

II.G.4. The Permittee shall maintain arrangements with state and local authorities, in accordance with IDAPA 58.01.05.008 [40 CFR § 264.37] and Attachment 7 of this Permit. If state or local officials refuse to enter into preparedness and prevention arrangements with the Permittee for a given HWMU, the Permittee must document this refusal in the Operating Record for the excluded unit.

II.H. CONTINGENCY PLAN

The Permittee shall comply with the Contingency Plan matrix provisions of IDAPA 58.01.05.008 [40 CFR Part 264 Subpart D] and as follows:

II.H.1. The Permittee shall comply with the Contingency Plan included in Attachment 7 of this Permit, at a minimum, whenever there is:

II.H.1.a A fire;

II.H.1.b An explosion; or,

II.H.1.c A sudden or non-sudden release of hazardous or mixed waste or hazardous waste constituents to the environment.

II.H.2. The Permittee shall review and amend, as necessary, the Contingency Plan, pursuant to IDAPA 58.01.05.008 and .012 (40 CFR §§ 264.54 and 270.42) and Permit Conditions I.D.4. and I.D.5. of this Permit within fourteen (14) calendar days of the following events:

II.H.2.a. This Permit is revised;

II.H.2.b. The plan fails in an emergency;

II.H.2.c. The Permittee changes the INL design, construction, operation, maintenance, or other circumstances in a way that materially increases the potential for fires, explosions, or releases of mixed waste or mixed waste constituents, or changes the response necessary in an emergency;

II.H.2.d. The list of emergency coordinators changes; or

II.H.2.e. The list of emergency equipment changes.

II.H.3. The Permittee shall ensure that a trained Emergency Coordinator or equivalent is available at all times in case of an emergency, in accordance with IDAPA 58.01.05.008 [40 CFR § 264.55] and Attachment 7 of this Permit.

II.H.4. The Permittee shall submit a copy of the Contingency Plan (and all revisions to the plan) to all local police departments, fire departments, hospitals, and state and local emergency response teams that may be called upon to provide emergency services, in accordance with IDAPA 58.01.05.008 [40 CFR § 264.53(b)] and Attachment 7 of this Permit.

II.H.5. The point of contact (POC) for reporting emergencies to the State of Idaho shall be the State of Idaho Communications Center at (800) 632-8000 or (208) 846-7610, and Fax Number (208) 846-7620.

II.H.6. The Permittee shall document in the Facility Operating Record the time, date, and details of any incident that requires implementing the Contingency Plan. Within fifteen (15) days after the incident, the Permittee shall submit a written report on the incident to the Director, in accordance with IDAPA 58.01.05.008 [40 CFR § 264.56(j)] and Attachment 7 of this Permit. Said report shall include, at a minimum, the items in Permit Condition I.T.3.a. of this Permit.

II.I. MANIFEST SYSTEM

The Permittee shall comply with the manifest requirements of IDAPA 58.01.05.008 [40 CFR Part 264 Subpart E].

II.J. RECORD KEEPING AND REPORTING

In addition to the record keeping and reporting requirements specified elsewhere in this Permit, the Permittee shall comply with the following:

II.J.1. The Permittee shall maintain a written Operating Record at INL, in accordance with Permit Condition I.Z.1.c. and I.Z.2. and IDAPA 58.01.05.008 [40 CFR § 264.73(a)], for all records identified in IDAPA 58.01.05.008 [40 CFR § 264.73(b)(1) through (b)(16)].

II.J.2. The Permittee shall, by March 1 of each year, submit to the Director a waste minimization certification, pursuant to IDAPA 58.01.05.008 [40 CFR § 264.73(b)(9)], that the Permittee has a program in place to reduce the volume and toxicity of hazardous waste that he generates to the degree determined by the Permittee to be economically practicable; and the proposed method of treatment, storage, or disposal is the most practicable method currently available to the Permittee, which minimizes the present and future threat to human health and the environment.

II.J.3. The Permittee shall, by March 1 of each even numbered year, submit to the Director a biennial report covering the facility (INL-wide) activities pursuant to IDAPA 58.01.05.008 [40 CFR § 264.75(a) through (j)].

II.J.4. The Permittee shall conduct and complete a source reduction evaluation review and written plan in accordance with the procedures and format provided in the "EPA Waste Minimization Opportunity Assessment Manual" (EPA/625/7-88/003). The review and plan shall be completed in compliance with Permit Condition II.J.5. of this Permit and include, at a minimum, the following general operating and reporting requirements:

II.J.4.a. The Permittee shall submit to the Director detailed descriptions of any programs the Permittee may have to assist generators of hazardous waste in reducing the volume or quantity and toxicity of wastes they produce.

II.J.4.b. The Permittee shall submit the following information to the Director and shall submit revisions or changes to the Director within thirty (30) calendar days after those revisions or changes:

II.J.4.b.1. A list of generators who received information from the Permittee according to Permit Condition II.J.4.a. of this Permit.

II.J.4.b.2. A list of generators who used the Permittee's contractor services on a Waste Minimization Program.

II.J.4.b.3. A list of generators known to the Permittee who have a Waste Minimization Program in place and any known results (i.e., has there been a reduction in wastes submitted for treatment, recycling, or disposal).

II.J.5. A waste minimization review and plan shall be submitted to the Director by March 31, 2007 and every four (4) years thereafter, in accordance with Permit Condition II.J.4. of this Permit. The review and plan shall address the entire INL, unless otherwise approved by the DEQ.

II.J.6. All reports, notifications, applications, or other materials (required to be submitted to the Director) shall be submitted in accordance with Permit Condition I.W. of this Permit.

II.K. CLOSURE

II.K.1. The Permittee shall meet the general Closure Performance Standard, as specified in IDAPA 58.01.05.008 [40 CFR § 264.111] and Attachments 8, 8A, 8B, and 8C of this permit, as modified here, during any partial and final closure of the ILWMS.

II.K.1.a. Clean closure of each HWMU shall be demonstrated by no detectable hazardous waste or underlying hazardous constituents in samples of the final rinse solution for both the tank and associated containment system. Revised action levels may be developed prior to closure and implemented through the appropriate class permit modification.

II.K.1.b. The pH of the final rinse water, before and after use, shall not change more than one-half (0.5) pH. A pH variance by more than one-half unit suggests hazardous waste or hazardous waste constituents are present, thus clean closure is not demonstrated.

II.K.2. The integrity of waste lines that will not be removed as a part of closure shall be determined by pressure testing, or other methods pre-approved by the Director, prior to completion of decontamination activities.

II.K.2.a. If a line fails a pressure test, or other integrity test method pre-approved by the Director, the Permittee shall determine the cause of the failure (e.g. open connection, loss of line integrity, malfunctioning pressure relief valve, etc.).

II.K.2.b. If a line fails a pressure test, or other integrity test method pre-approved by the Director, the Permittee shall determine if there has been a release to the environment.

II.K.2.b.1. If there has been a release to the environment, the Permittee shall characterize the nature and extent of the release.

II.K.2.b.2. If the release cannot be remediated as part of the general closure activity, the release may be passed to the FFA/CO for corrective action, with HWMA as an applicable requirement.

II.K.3. Closure of HWMA/RCRA lines shall be verified as empty and closed by blind flanging. If a line is to remain after closure, both ends shall be blind flanged. In the case that one end of the pipe cannot be reached, the pipe shall be blind flanged at the end nearest the source. In addition to this, all valves leading to the blind flange shall be locked closed, and the valves tagged out.

II.K.4. During all closure activities, atmospheric releases of hazardous waste and hazardous waste constituents shall be minimized by venting any off-gases through the appropriate off-gas system. If gases are vented directly to the atmosphere, the Permittee shall obtain any necessary air permits or exemptions.

II.K.5. The Permittee shall perform a hazardous waste determination on all solid waste generated during closure including, but not limited to, contaminated process equipment, building components, tanks and ancillary equipment, scrap metal, soils, etc., in accordance with IDAPA 58.01.05.006 [40 CFR § 262.11] and Attachment 2 of this Permit.

II.K.6. The following corrections are hereby made to the ILWMS Closure Plan, Attachments 8 and 8A, of this Permit:

II.K.6.a. Locking valves closed or tagging out valves is not sufficient to secure a system to prevent reintroduction of waste to a closed HWMU. DEQ will not consider locking or tagging out a valve unless the integrity of the valve is demonstrated, and the valve is then added to a weekly inspection procedure through a modification to this Permit.

II.K.6.b. References in the plan to the closure requirements for surface impoundments, waste piles, land treatment, incinerators, and containment buildings are not applicable and are hereby deleted from the plan.

II.K.6.c. The Permittee shall conduct sampling and analysis, performed in accordance with Permit Condition I.O., to verify that the Clean Closure Performance Standard has been achieved.

II.K.7. The Permittee shall amend the Closure Plans, in accordance with IDAPA 58.01.05.008 [40 CFR § 264.112(c)] and Attachments 8 and 8A of this Permit, prior to partial or final closure and whenever necessary.

II.L. EQUIVALENT MATERIALS/INFORMATION

II.L.1. If certain equipment, materials, and administrative information (such as names, phone numbers, addresses) are specified in this Permit, the Permittee is hereby authorized to use equivalent or superior items. Use of such equivalent or superior items shall not be considered a modification of this Permit, but the Permittee shall place in the Operating Record (prior to the institution of such revision) the revision, accompanied by a narrative explanation, and the date the revision became effective. The Director may judge the soundness of the revision during inspections of the facility and take appropriate action. The format of tables, forms, and figures are not subject to the requirements of this Permit and may be revised at the Permittee's discretion.

II.L.2. If the Department determines that the substitution was not equivalent to the original, it will notify the Permittee that the Permittee's claim of equivalency has been denied, the reasons for the denial, and that the original material or equipment must be used. If the product substitution is denied, the Permittee shall comply with the original approved product specification, find an acceptable substitution, or apply for a Permit Modification, in accordance with Permit Condition I.D.4.

II.M. AIR EMISSION STANDARDS FOR PROCESS VENTS

II.M.1. Applicability

II.M.1.a. The Process Equipment Waste Evaporator (PEWE) off-gas is processed through both the Building 604 Vessel Off-Gas System and the Process Atmospheric Protection System (APS) in Building 649, prior to discharge to the INTEC main stack. The PEWE vent does not meet the definition of a process vent at IDAPA 58.01.05.008 [40 CFR § 264.1031]. Therefore, the air emission standards for process vents do not apply.

II.M.1.b. The Evaporator Tank System (ETS) off-gas is processed through both the Building 659 Process Off-Gas System and the Atmospheric Protection System (APS) in Building 649, prior to discharge to the INTEC main stack. The ETS vent does not meet the definition of a process vent at IDAPA 58.01.05.008 [40 CFR § 264.1031]. Therefore, the air emission standards for process vents do not apply.

II.M.1.c. The Liquid Effluent Treatment and Disposal Facility (LET&D) off-gas is discharged to the INTEC main stack through a process vent, therefore, IDAPA 58.01.05.008 [40 CFR § 264.1031] is applicable.

II.M.1.d. The Integrated Waste Treatment Unit (IWTU) uses a two stage steam reformation process to treat the waste. The IWTU process does not involve distillation, fractionation, thin-film evaporation, solvent extraction, or air or steam stripping. The IWTU vent does not meet the definition of a process vent at IDAPA 58.01.05.008 [40

CFR § 264.1031]. Therefore, the air emission standards for process vents do not apply.

II.M.2. The Permittee shall determine the applicability of IDAPA 58.01.05.008 [40 CFR Part 264 Subpart AA] by documenting the total organic concentration in all feed sources to the LET&D.

II.M.2.a. If the LET&D manages only mixed hazardous waste with total organic concentrations less than 10 ppmw, then IDAPA 58.01.05.008 [40 CFR Part 264 Subpart AA] does not apply.

II.M.2.b. If the LET&D manages mixed hazardous waste with total organic concentrations greater than or equal to 10 ppmw, then IDAPA 58.01.05.008 [40 CFR Part 264 Subpart AA] applies.

II.M.3. The Permittee shall document compliance with the IDAPA 58.01.05.008 [40 CFR Part 264 Subpart AA] standards by:

II.M.3.a. Reducing the input total organic concentrations to the LET&D to less than 10 ppmw for all wastes processed; or

II.M.3.b. Reducing total organic emissions from all affected process vents at INL below 1.4 kg/h (3.0 lb/h) and 2.8 Mg/yr (3.1 tons/yr); or

II.M.3.c. Reducing, by means of a control device, total organic emissions from all affected process vents at INL by 95 weight percent.

II.M.4. The Permittee shall record the following information in the Facility Operating Record, in accordance with IDAPA 05.01.008 [40 CFR § 264.1035]:

II.M.4.a. Up-to-date documentation of the applicability and/or compliance with the process vent standards in Permit Conditions II.M.3., including:

II.M.4.a.1. Information and data identifying all affected process vents, annual throughput and operating hours of each affected unit, estimated emission rates for each affected vent and for the overall facility [i.e., the total emissions for all affected vents at the facility, and the approximate location within the facility of each affected unit (e.g., identify the hazardous waste management units on a facility plot plan)].

II.M.4.a.2. Information and data supporting determinations of vent emissions and emission reductions achieved by add-on control devices based on engineering calculations or source tests. For the purpose of determining compliance, determinations of vent emissions and emission reductions must be made using operating parameter values (e.g., temperatures, flow rates, or vent stream organic compounds and concentrations) that represent the conditions that result in maximum organic

emissions, such as when the waste management unit is operating at the highest load or capacity level reasonably expected to occur. If any action is taken (e.g., managing a waste of different composition or increasing operating hours of affected waste management units) that would result in an increase in total organic emissions from affected process vents at the facility, then a new determination is required.

II.M.5. Records of the monitoring, operating, and inspection information, required by Permit Condition II.M.4., shall be maintained in accordance with Permit Conditions I.Z.1.c. and I.Z.2.

II.M.6. Information and data used to determine whether any other INL process vents are subject to the requirements of IDAPA 58.01.05.008 [40 CFR Part 264 Subpart AA] shall be kept in the Operating Record.

II.M.6.a. The Operating Record shall be updated within thirty (30) days of a change in INL operations that potentially involve regulated process vents.

II.M.6.b. INL process vent data shall be reviewed at least annually for compliance with the IDAPA 58.01.05.008 [40 CFR §§ 264.1030 and .1035].

II.M.7. The Permittee shall modify this permit as necessary to ensure compliance with Permit Condition II.M.3. whenever:

II.M.7.a. The Permittee identifies additional hazardous waste process vents; or

II.M.7.b. The Permittee determines that the LET&D is subject to the requirements of IDAPA 58.01.05.008 [40 CFR Part 264 Subpart AA].

II.N. FINANCIAL ASSURANCE FOR FACILITY CLOSURE

The Permittee (DOE, as a federal government unit, and the DOE-designated contractor, as co-Permittee) is exempt from the financial assurance requirements, in accordance with IDAPA 58.01.05.008 [40 CFR § 264.140(c)].

II.O. LIABILITY INSURANCE FOR SUDDEN ACCIDENTAL OCCURRENCES

The Permittee (DOE, as a federal government unit, and the DOE-designated contractor, as co-Permittee) is exempt from the liability coverage for sudden accidental occurrence requirements, in accordance with IDAPA 58.01.05.008 [40 CFR § 264.140(c)].

II.P. COMPLIANCE SCHEDULE

II.P.1. The Permittee shall continue to evaluate methods to conduct inspections of the ILWMS tanks that can not presently be inspected using standard techniques.

II.P.1.a. Inspection techniques that are to be adopted shall be incorporated into the permit through the procedures of Permit Condition I.D.

II.P.1.b. The Permittee shall record a brief description and justification for adopting/rejecting each inspection method evaluated in the facility operating record.

II.P.1.c. The Permittee shall summarize the inspection methods evaluated in the semi-annual non-compliance report.

II.P.2 The Permittee shall prepare and submit a Class 2 Permit Modification Request to update IWTU information such as the contingency plan, emergency contact list, inspection schedules and checklists, and any other affected permit conditions, as necessary, reflecting as-built conditions and results of performance testing to ensure compliance with IDAPA 58.01.05.008 [40 CFR Part 264, Subparts B, C, D, and X] according to the following schedule:

II.P.2.a. Forty five (45) days after the System Performance Test (SPT) Report is submitted to the DEQ, submit the permit modification request to the DEQ.

II.Q. RISK ANALYSIS VALIDATION

II.Q.1. The risk analysis prepared to demonstrate the protectiveness of the ILWMS shall be re-evaluated whenever a compound of potential concern (COPC) is added to the emission inventory, as indicated by offgas measurements of a new COPC that confirm the compound is present in the offgas, or the emission rate of a known COPC exceeds the predicted emissions estimate by a factor of two (2) or more.

II.Q.1.a. If the calculated total risk from ILWMS exceeds 5.0E-6 risk for carcinogens and/or 0.5 hazard quotient for noncarcinogens, the risk analysis shall be revised and submitted to the Director within ninety (90) days.

II.Q.1.b. If the calculated total risk from ILWMS does not exceed 5.0E-6 risk for carcinogens and/or 0.5 hazard quotient for noncarcinogens, the risk re-evaluation shall be noted in the operating record.

MODULE III - CONTAINER STORAGE

III.A. PERMITTED CONTAINER STORAGE

Subject to the terms of this Permit, the Permittee may store mixed waste in the container storage areas of Building CPP-1696. Waste containers may be stored in vaults in the Vault Staging Area and the Vault Storage Area.

III.B. PERMITTED AND PROHIBITED WASTES IN THE CONTAINER STORAGE AREAS

III.B.1 The Permittee shall only store mixed waste that is exempt from IDAPA 58.01.05.008 (40 CFR 264 Subpart CC), as provided in IDAPA 58.01.05.008 (40 CFR § 264.1080).

III.B.2 Waste must meet the unit-specific waste acceptance criteria in Attachment 2 of this Permit.

III.B.3 The maximum permitted capacity for container storage is 175,000 gallons (663 m^3) in the Vault Storage Area and 4,070 gallons (15 m^3) in the Vault Loading Area.

III.B.4 Waste containing free liquids cannot be stored in the Vault Loading Area or Vault Storage Area.

III.C. CONDITION OF CONTAINERS

If a container holding waste is not in good condition (e.g., severe rusting, apparent structural defects), or if it begins to leak, the Permittee shall: transfer the waste from said container to a container that is in good condition or otherwise manage the waste in accordance with IDAPA 58.01.05.008 [40 CFR § 264.171] and Attachment 1.

III.D. COMPATIBILITY OF WASTE WITH CONTAINERS

The Permittee shall assure that the ability of the container to contain the waste is not impaired, in accordance with IDAPA 58.01.05.008 [40 CFR § 264.172] and Attachments 1 and 6 of this Permit.

III.E. MANAGEMENT OF CONTAINERS

III.E.1. The Permittee shall keep all storage containers closed during storage, and shall not open, handle, or store containers in a manner which may rupture the container or cause it to leak, in accordance with IDAPA 58.01.05.008 [40 CFR § 264.173] and Attachments 1 and 6 of this Permit.

III.E.2. The waste stored in the Vault Loading Area does not contain free liquids due to the elevated process temperatures. The containers (canisters) are placed in cement vaults, therefore, secondary containment is not required in the Vault Storage Area.

III.F. INSPECTIONS

III.F.1. The Permittee shall inspect the permitted container storage areas in accordance with IDAPA.58.01.05.008 [40 CFR §264.174] and the inspection schedules found in Attachment 4 of this permit.

III.F.1.a. Due to the high radiation fields anticipated for the stored waste, DEQ approves managing the concrete vaults as the container for the purposes of inspection.

III.F.1.b. The Permittee shall inspect the canisters within a vault to ensure canister integrity when a vault is opened, weekly if the vault remains open, and prior to vault closure. These inspections may be visual, camera or by some other method pre-approved by DEQ.

III.G. RECORDKEEPING

The Permittee shall document the results of all inspections, spill responses, waste analysis, and certifications in accordance with Permit Conditions I.Z. and II.J. of this Permit.

III.H. CLOSURE

The Permittee shall close the permitted container storage area in accordance with IDAPA 58.01.05.008 [40 CFR §264.178] and Attachment 8 of this Permit.

MODULE IV - STORAGE IN TANKS

IV.A. TANK STORAGE

IV.A.1. Deep Tanks

Table 2

UNIT NAME:	**WG-Cell, Deep Tanks VES-WG-100 and VES-WG-101**		**BUILDING NO.**	**CPP-601**
NUMBER OF UNITS:	**2**	**PROCESS CODES:**	**S02, T01**	
DESCRIPTION:	**Size**: Each tank is cylindrical and horizontal-oriented with domed ends. The dimensions of the tanks are an outside diameter of 9' and a length of 10' with a tangent-to-tangent length of 8' 6". The tank construction material is Type 347 Stainless Steel (SS). **Secondary Containment**: The Deep Tanks are located in a vault 57' 6" below grade made of reinforced concrete, with the floors and lower 3' of the walls lined with SS. The inner dimensions of the vault are 15' x 38' 6" x 21' 6". The cell drains to an SS lined sump. Upon high level alarm, liquid in the sump is steam jetted to VES-WG-100. If the tank system or secondary containment becomes unfit for use, the permittee must comply with permit conditions III.C.6. and III.C.7.			
CAPACITY:	**~4,500 Gallons Per Tank**			
NOTES:	Tanks closed and grouted, See Attachment 8A for the Post-Closure Plan.			

UNIT NAME:	**WH-Cell, Deep Tanks VES-WH-100 and VES-WH-101**		**BUILDING NO.**	**CPP-601**
NUMBER OF UNITS:	**2**	**PROCESS CODES:**	**S02, T01**	
DESCRIPTION:	**Size**: Each tank is cylindrical and horizontal-oriented with domed ends. The dimensions of the tanks are an outside diameter of 9' and a length of 10' with a tangent-to-tangent length of 8' 6". The tank construction material is Type 347 SS. **Secondary Containment**: The Deep Tanks are located in a vault 57' 6" below grade made of reinforced concrete, with the floors and lower 3' of the walls lined with SS. The inner dimensions of the vault are 15' x 38' 6" x 21' 6". The cell drains to a SS lined sump. Upon high level alarm, liquid in the sump is steam jetted to VES-WH-100. If the tank system or secondary containment becomes unfit for use, the permittee must comply with permit conditions III.C.6. and III.C.7.			
CAPACITY:	**~4,500 Gallons Per Tank**			
NOTES:	Tanks closed and grouted. See Attachment 8A for the Post-Closure Plan.			

IV.A.2. PEWE Storage Tanks

UNIT NAME:	**Evaporator Feed Sediment Tank, VES-WL-132**		**BUILDING NO.**	**CPP-604**
NUMBER OF UNITS:	**1**	**PROCESS CODES:**	**S02, T01**	
DESCRIPTION:	**Size:** The tank is cylindrical and vertical-oriented, with domed ends. The dimensions of the tank are an outside diameter of 9' and a length of 11', with a tangent-to-tangent length of 7' 9". The tank construction material is Nitronic 50 SS. **Secondary Containment:** The tank is located in an underground vault constructed of reinforced concrete, with floors and lower 2' 6" of the walls lined with SS. The vault has the dimensions of 17' x 16' 6" x 13' 8". The cell floor slopes to a 3" drain line that leads to the VES-WL-133 vault sump. Upon high alarm, liquid in the sump is jetted to the inlet line to VES-WL-132.			
CAPACITY:	**~4,700 Gallons**			
NOTES:	**Receives:** Inputs come from New Waste Calcining Facility Tanks, VES-WL-101/111, VES-WM-100/101/102, snow melt or other liquids from TFF sumps, basin water from CPP-666 or CPP-603. Waste is jetted or pumped into the tank. **Output:** The waste is normally drained by gravity to VES-WL-133.			

UNIT NAME:	**Evaporator Feed Collection Tank, VES-WL-133**		**BUILDING NO.**	**CPP-604**
NUMBER OF UNITS:	**1**	**PROCESS CODES:**	**S02, T01**	
DESCRIPTION:	**Size:** The tank is cylindrical and horizontal-oriented with domed ends. The dimensions of the tank are an outside diameter of 10', and a length of 34' with a tangent-to-tangent length of 30'. The tank construction material is Nitronic 50 SS. **Secondary Containment:** The tank is located in an underground vault constructed of reinforced concrete, with floors and lower 5' of the walls lined with SS. The vault has the dimensions of 42' x 16' 6" x 17'. The cell drains to a sump shared with the VES-WL-132 vault, with the floor sloping to a sump along the west wall. Upon high alarm, liquid in the sump is jetted to the inlet line to VES-WL-132.			
CAPACITY:	**~19,000 Gallons**			
NOTES:	**Receives:** Inputs come from VES-WL-132 and all the same sources as VES-WL-132 and recycled condensate from WL-106, WL-107 and WL-163 via gravity drain lines. Liquid that collects in the PWL system tanks and sumps is transferred via steam jets. Waste is gravity-fed into the tank. **Outputs:** Waste is normally pumped to VES-WL-109 or EVAP-WL-129.			

UNIT NAME:	**Surge Tank, VES-WL-102**		**BUILDING NO.**	**CPP-604**
NUMBER OF UNITS:	**1**	**PROCESS CODES:**	**S02, T01**	
DESCRIPTION:	**Size:** The tank is a cylindrical and horizontal-oriented tank with domed ends. The dimensions of the tank are an outside diameter of 10', and a length of 33', with a tangent-to-tangent length of 30'. The tank construction material is Type 347 SS. **Secondary Containment:** The tank is located in a vault constructed of reinforced concrete, with floors and the lower 3' of the walls lined with Hypalon. The vault has the dimensions of 30' 6" x 43' x 16'. The cell drains to an SS-lined floor sump in the center of the cell. Upon high alarm, the liquid in the sump is jetted to VES-WL-150 and then to VES-WL-132.			
CAPACITY:	**~18,400 Gallons**			
NOTES:	**Receives:** Inputs are normally pumped from VES-WL-133. **Outputs:** Waste is normally pumped to VES-WL-133.			

UNIT NAME:	**Evaporator Head Tank, VES-WL-109**		**BUILDING NO.**	**CPP-604**
NUMBER OF UNITS:	**1**	**PROCESS CODE:**	**S02**	
DESCRIPTION:	**Size:** The tank is cylindrical and vertical-oriented, with domed ends. The dimensions of the tank are an outside diameter of 3' and a length of 7' 2", with a tangent-to-tangent length of 5'. The tank construction material is Type 347 SS. **Secondary Containment:** The tank is located in a cell constructed of reinforced concrete, with the floors and lower 3' of the walls lined with SS. The cell has the dimensions of 22' x 18' x 34'. The cell drains to an SS-lined sump (10" x 1') in the NW corner of the cell. Upon high alarm, liquid in the sump is jetted as part of the PWL Collection System to VES-WL-133.			
CAPACITY:	**~270 Gallons**			
NOTES:	**Receives:** Inputs come from VES-WL-133 or VES-WL-102. Waste is jetted or pumped into the tank. **Outputs:** The waste is gravity-fed into EVAP-WL-161, and the overflow returns to VES-WL-133 or VES-WL-102.			

UNIT NAME:	**Evaporator Flash Column, VES-WL-129**		**BUILDING NO.**	**CPP-604**
NUMBER OF UNITS:	**1**	**PROCESS CODES:**	**S02, X99**	
DESCRIPTION:	**Size:** The tank is cylindrical and vertical-oriented, with domed ends. The dimensions of the tank are an outside diameter of 3', and a length of 19 '6" with a tangent-to-tangent length of 14' 9". The tank construction material is Nitronic 50 SS. **Secondary Containment:** The unit is located in a cell constructed of reinforced concrete, with the floors and walls lined with SS. The vault has the dimensions of 14' x 21' 4" (including the access area) x 34' (the access area is only 8' high). The access area floor and lower 1' of the walls are lined with SS. The cell drains to a sump, with the floor sloping to a 2-inch drain that leads to the feed pump cell sump. The sump has dimensions of 1' 6" x 1' 6" x 2' 6". Upon high alarm, the sump is jetted to VES-WL-133.			
CAPACITY:	**~1000 Gallons**			
NOTES:	**Receives:** Inputs come from VES-WL-133. Waste is pumped into the column. **Outputs:** The overheads are collected in VES-WL-131. The bottoms are gravity fed to VES-WL-133, VES-WL-101, or VES-WL-111.			

UNIT NAME:	**Process Condensate Surge Tank, VES-WL-134**		**BUILDING NO.**	**CPP-604**
NUMBER OF UNITS:	**1**	**PROCESS CODE:**	**S02**	
DESCRIPTION:	**Size:** The tank is cylindrical and vertical-oriented, with domed ends. The dimensions of the tank are an outside diameter of 3' 6", and a length of 8' 9", with a tangent-to-tangent length of 7'. The tank construction is Type 304L SS. **Secondary Containment:** The tank is located in a cell constructed of reinforced concrete, with the floors and the lower 1' of the walls lined with SS. A barrier that is 6" high is located in front of the condensate collection cell door to prevent leakage to the access corridor. The cell has the dimensions of 46' x 21' x 35'6". The containment area drains to either SU-WL-145 or SU-WL-146. Upon high alarm, liquid in the sump is jetted as part of the PWL Collection System to VES-WL-133.			
CAPACITY:	**~500 Gallons**			
NOTES:	**Receives:** Inputs come from HE-WL-308 (acidic condensate). Waste is gravity fed into the tank. **Outputs:** In series operation, this tank provides feed for EVAP-WL-161. The waste is pumped to VES-WL-161.			

UNIT NAME:	**Evaporator Flash Column, VES-WL-161**		**BUILDING NO.**	**CPP-604**
NUMBER OF UNITS:	**1**	**PROCESS CODES:**	**S02, X99**	
DESCRIPTION:	**Size:** The column is vertical and cylindrical, with domed ends. The dimensions of the tank are an outside diameter of 3', and a length of 19' 6", with a tangent-to-tangent length of 14' 9". The tank construction material is Nitronic 50 SS. **Secondary Containment:** The unit is located in a cell constructed of reinforced concrete, with the floors and lower 3' of the walls lined with SS. The cell has the dimensions of 22' x 18' x 34'. The cell drains to an SS-lined sump (10" x 1') in the NW corner of the cell. Upon high alarm, liquid in the sump is jetted as part of the PWL Collection System to VES-WL-133.			
CAPACITY:	**~1,000 Gallons**			
NOTES:	**Receives:** Inputs come from VES-WL-109 or VES-WL-134. Waste is gravity fed into the column. **Outputs:** The overheads are collected in VES-WL-131. The bottoms are gravity fed to VES-WL-133, VES-WL-101, or VES-WL-111.			

UNIT NAME:	**Process Condensate Surge Tank, VES-WL-131**		**BUILDING NO.**	**CPP-604**
NUMBER OF UNITS:	**1**	**PROCESS CODE:**	**S02**	
DESCRIPTION:	**Size:** The tank is cylindrical and horizontal-oriented, with domed ends. The dimensions of the tank are an outside diameter of 2', and a length of 2' 10" with a tangent-to-tangent length of 2' 9". The tank construction material is Type 304L SS. **Secondary Containment:** The tank is located in a cell constructed of reinforced concrete, with the floor and lower 1' of the walls lined with SS. The barrier is 6" high and is located in front of the condensate collection cell door to prevent leakage to the access corridor. The cell has the dimensions of 46' x 21' x 35' 6". The cell drains to either SU-WL-145 or SU-WL-146. Upon high alarm, liquid in the sump is jetted as part of the PWL Collection System to VES-WL-133.			
CAPACITY:	**~66 Gallons**			
NOTES:	**Receives:** Inputs come from HE-WL-301 or HE-WL-308 (acidic condensate). Waste is gravity-fed into the tank. **Outputs:** The waste is pumped to VES-WL-106, VES-WL-107, and VES-WL-163.			

UNIT NAME:	**Process Off-gas Condensate Knock-Out Pot, VES-WL-108**		**BUILDING NO.**	**CPP-604**
NUMBER OF UNITS:	**1**	**PROCESS CODE:**	**S02**	
DESCRIPTION:	**Size:** The tank is cylindrical and vertical-oriented, with domed ends. The dimensions of the tank are an outside diameter of 2', and a length of 5' 8", with a tangent-to-tangent length of 2' 8". The tank construction material is Type 347 SS. **Secondary Containment:** The tank is located in the same cell as VES-WL-106, VES-WL-107, and VES-WL-163.			
CAPACITY:	**~98 Gallons**			
NOTES:	**Receives:** Inputs are the condensed liquid from the evaporator VOG before the off-gas is released to the plant VOG system. **Outputs:** The waste is gravity-fed to VES-WL-133.			

UNIT NAME:	**Bottoms Collection Tank, VES-WL-111**		**BUILDING NO.**	**CPP-604**
NUMBER OF UNITS:	**1**	**PROCESS CODES:**	**S02, T01**	
DESCRIPTION:	**Size:** The tank is rectangular and horizontal-oriented. The dimensions of the tank are 12' long, 4' 8" wide, and 3' 6" high. The tank construction material is Type 304L SS. **Secondary Containment:** The tank is located in a cell constructed of reinforced concrete, with the floors and lower 3' of the walls lined with SS. The cell has the dimensions of 22' x 18' x 34'. The cell drains to a SS-lined sump (10" x 1') in the NW corner of the cell. Upon high alarm, liquid in the sump is jetted as part of the PWL Collection System to VES-WL-133.			
CAPACITY:	**~1,500 Gallons**			
NOTES:	**Receives:** Inputs come from VES-WL-129 and VES-WL-161 (concentrated acidic bottoms). Waste is gravity-fed into the tank. **Outputs:** The waste is normally jetted to the CPP-604 TFT, the TFF, VES-WL-101 or the ETS.			

UNIT NAME:	**Bottoms Collection Tank, VES-WL-101**		**BUILDING NO.**	**CPP-604**
NUMBER OF UNITS:	**1**	**PROCESS CODES:**	**S02, T01**	
DESCRIPTION:	**Size:** The tank is cylindrical and horizontal-oriented, with domed ends. The dimensions of the tank are an outside diameter of 10', and a length of 33', with a tangent-to-tangent length of 30'. The tank construction material is Type 347 SS. **Secondary Containment:** The tank is located in a vault constructed of reinforced concrete, with floors and lower 3' of walls lined with Hypalon. The vault has the dimensions of 30' 6" x 43' x 16'. The cell drains to a SS-lined floor sump in the center of the cell. Upon high alarm, the sump is jetted to VES-WL-150 and then to VES-WL-132.			
CAPACITY:	**~18,400 Gallons**			
NOTES:	**Receives:** Inputs come from VES-WL-129 and VES-WL-161 (concentrated acidic bottoms). The waste is gravity-fed into the tank. **Outputs:** The waste is normally jetted to the CPP-604 TFT, the TFF, or the ETS.			

UNIT NAME:	**Tank Farm Tank, VES-WM-100**		**BUILDING NO.**	**CPP-604**
NUMBER OF UNITS:	**1**	**PROCESS CODES:**	**S02, T01**	
DESCRIPTION:	**Size:** The tank is cylindrical and horizontal-oriented with domed ends. The dimensions of the tank are an outside diameter of 10' and a length of 33', with a tangent-to-tangent length of 30'. The tank construction material is Type 347 SS. **Secondary Containment:** This tank is located in a vault constructed of reinforced concrete, with the floor and lower 3' 6" of the walls lined with SS. The vault has the dimensions of 17' x 43' x 16'. The floor of the vault slopes to a sump with the dimensions of 2' x 2' x 4' along east wall of the vault. Upon high alarm, the liquid in the sump is jetted to VES-WL-132.			
CAPACITY:	**~18,400 Gallons**			
NOTES:	**Receives:** Inputs come from CPP-659, the Deep Tanks, VES-WL-101, 111, and fuel storage basins. Waste is gravity-fed, jetted, or pumped into the tank. **Outputs:** Waste is normally jetted to VES-WL-132, the ETS, or the TFF.			

UNIT NAME:	**Tank Farm Tanks, VES-WM-101 and VES-WM-102**		**BUILDING NO.**	**CPP-604**
NUMBER OF UNITS:	**2**	**PROCESS CODES:**	**S02, T01**	
DESCRIPTION:	**Size:** The tanks are cylindrical and horizontal-oriented with domed ends. The dimensions of the tanks are an outside diameter of 10' and a length of 33', with a tangent-to-tangent length of 30'. The tank construction material is Type 347 SS. **Secondary Containment:** The tanks are located in a vault constructed of reinforced concrete, with the floor and the lower 3' 6" of the walls lined with SS. The vault has the dimensions of 30' 6"' x 43' x 16'. The vault floor slopes to a sump with the dimensions of 2' x 2' x 4' in the center of the vault. Upon high alarm, the liquid in the sump is jetted to VES-WL-132.			
CAPACITY:	**~18,400 Gallons Each**			
NOTES:	**Receives:** Inputs come from VES-WM-100. The waste is gravity-fed or jetted into the tanks. **Outputs:** Waste is jetted to VES-WL-132, VES-WM-100, VES-WM-101, the ETS, or the TFF.			

UNIT NAME:	**Process Waste Liquid System: VES-WL-135, VES-WL-136, VES-WL-139, VES-WL-142**		**BUILDING #**	**CPP-604**
NUMBER OF UNITS:	**4**	**PROCESS CODE:**	**S02**	
DESCRIPTION:	**Size:** Each tank is cylindrical and vertical-oriented with domed ends. The dimensions of the tanks are an outside diameter of 1' 6" and a length of 10", with a tangent-to-tangent length of 8". The tanks' construction material is Type 304L SS. **Secondary Containment:** The tanks are located in sumps constructed of reinforced concrete lined with SS. The sump has the dimensions of 2' x 2' x 1' 8". VES-WL-135 is located in Valve Box D5, which has measurements of 6' x 8' x 11' 9". Upon high alarm, all are jetted to a common header and transferred to VES-WL-133.			
CAPACITY:	**~10 Gallons Each**			
NOTES:	**Receives:** Off-gas condensate from CPP-604, CPP-649, and associated valve boxes. Waste is gravity-fed into the tanks. **Outputs:** Waste is jetted to VES-WL-133.			

UNIT NAME:	**Process Waste Liquid System: VES-WL-137, VES-WL-138, VES-WL-144**		**BUILDING #**	**CPP-604**
NUMBER OF UNITS:	**3**	**PROCESS CODE:**	**S02**	
DESCRIPTION:	**Size:** Each tank is cylindrical and vertical-oriented with domed ends. The dimensions of the tanks are an outside diameter of 2' and a length of 13", with a tangent-to-tangent length of 1'. The construction material of each tank is Type 304L SS. **Secondary Containment:** The tanks are located in sumps constructed of reinforced concrete and lined with SS. The sumps have the dimensions of 2' 6" x 2' 6" x 2'. Upon high alarm liquid from the sumps is jetted to a common header and transferred to VES-WL-133.			
CAPACITY:	**~25 Gallons Each**			
NOTES:	**Receives:** Inputs are off-gas condensate from CPP-604, CPP-649, and associated valve boxes. Waste is gravity-fed into the tanks. **Outputs:** Waste is jetted to VES-WL-133.			

UNIT NAME:	**Process Waste Liquid System: VES-WL-150**		**BUILDING #**	**CPP-604**
NUMBER OF UNITS:	**1**	**PROCESS CODE:**	**S02**	
DESCRIPTION:	**Size:** The tank is cylindrical and vertical-oriented with domed ends. The dimensions of the tank are a diameter of 2' and a length of 2' 3", with a tangent-to-tangent length of 2'. The tank construction material is Type 304L SS. **Secondary Containment:** The tank is located in the same cell as VES-WL-101/102.			
CAPACITY:	**~50 Gallons**			
NOTES:	**Receives**: Inputs come from floor drains. Waste is jetted or gravity-fed from floor drains into the tank. **Outputs:** Waste is jetted to VES-WL-132.			

UNIT NAME:	**Process Condensate Collection Tanks: VES-WL-106 and VES-WL-107**		**BUILDING #**	**CPP-604**
NUMBER OF UNITS:	**2**	**PROCESS CODES:**	**S02, T01**	
DESCRIPTION:	**Size:** Each tank is cylindrical and vertical-oriented with domed ends. The dimensions of the tanks are an outside diameter of 8' and a length of 14', with a tangent-to-tangent length of 12'. The tanks construction material is Type 347 SS. **Secondary Containment:** The tanks are located in a cell constructed of reinforced concrete, with the floor and lower 1' of the wall lined with SS. A 6-inch high barrier is located in front of the condensate collection cell door to prevent leakage to the access corridor. The cell has the dimensions of 46' x 21' x 35' 6". The liquid drains to either SU-WL-145 or SU-WL-146. Upon high alarm, the liquid in the sump is jetted as part of the PWL Collection System to VES-WL-133.			
CAPACITY:	**~5,000 Gallons Each**			
NOTES:	**Receives:** Inputs are evaporator vapor condensate from VES-WL-131. Waste is pumped into the tank. **Outputs:** Waste is normally pumped to the LET&D facility.			

UNIT NAME:	**Process Condensate Collection Tank: VES-WL-163**		**BUILDING #**	**CPP-604**
NUMBER OF UNITS:	**1**	**PROCESS CODES:**	**S02, T01**	
DESCRIPTION:	**Size:** This tank is cylindrical and vertical-oriented with domed ends. The dimensions of the tank are an outside diameter of 8' and a length of 14', with a tangent-to-tangent length of 12'. The tank construction material is Type 304L SS. **Secondary Containment:** The tank is located in a cell constructed of reinforced concrete, with the floor and lower 1' of the wall lined with SS. A 6-inch high barrier is located in front of the condensate collection cell door to prevent leakage to the access corridor. The vault has the dimension of 46' x 21' x 35' 6". The liquid drains to either SU-WL-145 or SU-WL-146. Upon high alarm, the liquid in the sump is jetted as part of the PWL Collection System to VES-WL-133.			
CAPACITY:	**5,000 Gallons**			
NOTES:	**Receives:** Input is evaporator vapor condensate from VES-WL-131. Waste is pumped into the tank. **Outputs:** Waste is normally pumped to the LET&D Facility.			

IV.A.2.1. The following components are integral equipment to the PEWE Distillation Systems. Failure of one of these components will result in the shut down of the associated PEWE distillation unit. These components may contain *de minimus* volumes of waste during operations and shut down.

<u>EVAPORATOR UNIT (EVAP-WL-129)</u>

VES-WL-130 Mist Eliminator
HE-WL-307 Evaporator Reboiler
HE-WL-308 Evaporator Condenser

<u>EVAPORATOR UNIT (EVAP-WL-161)</u>

VES-WL-162 Evaporator Separator
HE-WL-300 Evaporator Reboiler
HE-WL-301 Evaporator Condenser

IV.A.3. Liquid Effluent Treatment and Disposal Tanks (LET&D)

UNIT NAME:	**Acid Fractionator Waste Feed Head Tank: VES-WLK-197**		**BUILDING #**	**CPP-1618**
NUMBER OF UNITS:	**1**	**PROCESS CODE:**	**S02**	
DESCRIPTION:	**Size:** The tank is cylindrical and horizontal-oriented with domed ends. The dimensions of the tank are an outside diameter of 3' and a length of 5' 6", with a tangent-to-tangent length of 4'. The tank construction material is Type 304L SS. **Secondary Containment:** The tank is located in the top of CPP-1618, above the Fractionator Cell 1 containment. The tank is located in a vault made of steel-reinforced concrete, with the floors and lower 3' of the walls lined with SS. The floor dimensions of the vault are 17' x 14' 6". The cell drains to a SS lined sump located slightly northeast of the center of the cell. Liquid in the sump is jetted to VES-WL-195 or VES-WL-133. Upon high-high alarm, the feed inlet valve and pump are automatically shut down.			
CAPACITY:	**~270 Gallons**			
NOTES:	**Receives:** Inputs come from VES-WL-106, 107, and 163. Waste is pumped into the tank. **Outputs:** The waste is gravity fed to either Acid Fractionator FRAC-WLL-170 or FRAC-WLK-171.			

UNIT NAME:	**Acid Fractionator: FRAC-WLL-170**		**BUILDING #**	**CPP-1618**
NUMBER OF UNITS:	**1**	**PROCESS CODES:**	**S02, X99**	
DESCRIPTION:	**Size:** The two acid fractionators are identical thermal siphon units, with an inside diameter of 42 " and a height of approximately 28' 6" (24' from tangent to tangent). Both units consist of vertical-oriented, cylindrical tanks, with domed ends. Hastelloy G-30 is used for equipment and piping. **Secondary Containment:** Acid Fractionator Cell 2 is 17' long and 14' 6" wide. The cell is constructed of steel-reinforced concrete with a stainless-steel liner that is 3' high. The cell has a door in the east wall. In front of the door is a step measuring 3' 10" by 3' 10" by 4". The floor is sloped toward a sump, which is located slightly to the northeast of the center of the cell.			
CAPACITY:	**~460 Gallons**			
NOTES:	**Receives:** Waste is gravity-fed from VES-WLK-197. **Outputs:** Overheads pass through air pollution control equipment and are transferred out the INTEC Main Stack. Bottoms are collected in VES-WLL-195.			

UNIT NAME:	**Acid Fractionator: FRAC-WLK-171**		**BUILDING #**	**CPP-1618**
NUMBER OF UNITS:	**1**	**PROCESS CODES:**	**S02, X99**	
DESCRIPTION:	**Size:** The two acid fractionators are identical thermal siphon units, with an inside diameter of 42" and a height of approximately 28' 6" (24' from tangent to tangent). Both units consist of vertical-oriented, cylindrical tanks, with domed ends. Hastelloy G-30 is used for equipment and piping. **Secondary Containment:** Acid Fractionator Cell 1 is 17' long and 14' 6" wide. The cell is constructed of steel-reinforced concrete with a stainless-steel liner that is 3' high. The cell has a door in the west wall. The floor is sloped toward a sump, which is located in the cell.			
CAPACITY:	**~460 Gallons**			
NOTES:	**Receives:** Waste is gravity-fed from VES-WLK-197. **Outputs:** Overheads pass through air pollution control equipment and are transferred out the INTEC Main Stack. Bottoms are collected in VES-WLL-195.			

UNIT NAME:	**Acid Fractionator Bottoms Tank: VES-WLL-195**		**BUILDING #**	**CPP-1618**
NUMBER OF UNITS:	**1**	**PROCESS CODE:**	**S02**	
DESCRIPTION:	**Size:** The tank is a cylindrical and horizontal-oriented tank with domed ends. The dimensions of the tank are an inner diameter of 3' and a length of 5' 9", with a tangent-to-tangent length of 4'. The tank construction material is Type 304L SS. **Secondary Containment:** The tank is located in a pit in Acid Fractionator Cell 2 of CPP-1618, constructed of steel-reinforced concrete with a SS liner. The pit has the dimensions of 7' 10" x 6' 9" x 6'. Upon high alarm, the operator is notified of a potential overfill condition and the need to transfer the waste. The secondary containment can contain 100% of the volume of VES-WLL-195.			
CAPACITY:	**~270 Gallons**			
NOTES:	**Receives:** Inputs are the fractionator bottoms, from either VES-WLL-170 or VES-WLK-171. Waste is gravity fed into the tank. **Outputs:** The waste is pumped to VES-WL-133, VES-WL-101/111, VES-NCR-171, or the TFF.			

UNIT NAME:	**Acid Recycle Tank: VES-NCR-171**	**BUILDING #**	**CPP-659 Annex**
NUMBER OF UNITS:	**1**	**PROCESS CODE:**	**S02**
DESCRIPTION:	**Size:** The tank is cylindrical and horizontal-oriented. The dimensions of the tank are an outside diameter of 11' and a length of 33' 8". The tank construction material is Type 304 SS. **Secondary Containment:** The tank is located in a vault constructed of reinforced concrete with the floor and lower 4' 8" lined with Type 304L SS. The vault has the floor dimensions of 17' 4" x 41' 3", with a minimum containment volume of 24,676 gallons. The cell drains to a gutter on the south side of the vault, which drains to the southeast into a sump unit. Upon high level alarm, liquid in the sump is jetted to VES-NCR-171.		
CAPACITY:	**~22,500 Gallons**		
NOTES:	**Receives:** Inputs come from the fractionator bottoms tank, VES-WLL-195. Waste is pumped into the tank. **Outputs:** Waste is airlifted to VES-NCR-173 and distributed into a common header for use elsewhere at the INTEC.		

UNIT NAME:	**Nitric Acid Head Tank: VES-NCR-173**	**BUILDING #**	**CPP-659 Annex**
NUMBER OF UNITS:	**1**	**PROCESS CODE:**	**S02**
DESCRIPTION:	**Size:** The tank is cylindrical and vertical-oriented. The dimensions of the tank are a diameter of 2' and a length of 4' 8". The tank construction material is Type 304L SS. **Secondary Containment:** The tank is located in the Acid Recycle Tank Vault, constructed of reinforced concrete with the floor and lower 4' 8" of the walls lined with Type 304L SS. The vault has the floor dimensions of 17' 4" x 41' 3", with a minimum containment volume of 24,676 gallons. The cell drains to a gutter on the south side of the vault, which drains to the southeast into a sump unit. Upon high level alarm, the liquid in the sump is jetted to VES-NCR-171.		
CAPACITY:	**~90 Gallons**		
NOTES:	**Receives:** Inputs come from VES-NCR-171. Waste is airlifted into the tank. **Outputs:** The waste is gravity fed to a common header that can be routed for reuse throughout the INTEC.		

IV.A.3.1. The following components make up the LET&D Treatment Unit. Failure of one component will result in the shut down of the associated LET&D Distillation Unit. These components may contain waste during operation shut downs.

ACID FRACTIONATOR (FRAC-WLL-170)

HE-WLL-391 Heat Exchanger
HE-WLL-396 Condenser
HE-WLL-398 Reboiler
VES-WLL-198 Liquid Separator
HE-WLL-394 Superheater

ACID FRACTIONATOR (FRAC-WLK-171)

HE-WLK-392 Heat Exchanger
HE-WLK-397 Condenser
HE-WLK-399 Reboiler
VES-WLK-198 Liquid Separator
HE-WLK-395 Superheater

IV.A.4. EVAPORATOR TANK SYSTEM (ETS)

UNIT NAME:	**Blend Tank VES-NCC-101**		**BUILDING NO.**	CPP-659
NUMBER OF UNITS	1	**PROCESS CODE**	S02/T01	
DESCRIPTION:	**Size:** The tank has an approximate diameter of 9 ft 6 in. and a height of 13 ft. It is a vertical, cylindrical tank with domed ends. It is constructed of Nitronic 50 stainless steel. **Secondary Containment:** Located in a concrete cell – 32' 4". x 24'. The floor and lower 3' of the walls are lined with stainless steel. The floor slopes to a drain. An alarm sounds when liquid is detected. Floor is drained to VES-NCC-119.			
CAPACITY	**~5,870 Gallons**			
NOTES:	**Receives:** Inputs normally come from VES-NCC-102, VES-NCC-103, VES-NCC-119, VES-NCC-122, VES-NCD-123, VES-NCD-129, PEWE, and the TFF. May also receive liquid from VES-SRC-131, since transfers from VES-SCR-131 may occur to this tank, if necessary. **Output:** The waste is jetted to VES-NCC-102, VES-NCC-103, VES-NCC-119, PEWE, or back to the TFF and is airlifted to VES-NCC-152. May also be airlifted to VES-NCC-102 or VES-NCC-103.			

UNIT NAME:	**Hold Tanks VES-NCC-102 and VES-NCC-103**		**BUILDING NO.**	CPP-659
NUMBER OF UNITS	2	**PROCESS CODE**	S02/T01	
DESCRIPTION:	**Size:** The tanks have an approximate diameter of 8' and a height of 12'. These vertical cylindrical tanks are equipped with domed ends. They are constructed of Nitronic 50 stainless steel. **Secondary Containment:** Located in a concrete cell 32' 4" x 24'. The floor and lower 3' of the walls are lined with stainless steel. The floor slopes to a drain. An alarm sounds when liquid is detected. Floor is drained to VES-NCC-119.			
CAPACITY	**~4,000 Gallons Each**			
NOTES:	**Receives:** Input is normally from VES-NCC-101, VES-NCC-102, VES-NCC-103, VES-NCC-119, VES-NCC-122, VES-NCD-123, VES-NCD-129, PEWE, and the TFF. May also receive liquid from VES-SRC-131, since transfers from VES-SCR-131 may occur to this tank, if necessary. **Output:** The waste is jetted to VES-NCC-101, VES-NCC-102, VES-NCC-103, VES-NCC-119, PEWE, back to the TFF, or pumped to VES-SRC-131.			

UNIT NAME:	**Constant Head Feed Tank VES-NCC-152**		**BUILDING NO.**	CPP-659
NUMBER OF UNITS	1	**PROCESS CODE**	S02	
DESCRIPTION:	**Size:** The tank has an approximate diameter of a 2' and a length of 9'. The tank is horizontally oriented, cylindrical and has domed ends. It is constructed of Nitronic 50 stainless steel. **Secondary Containment:** Located in a concrete cell 32' 4" x 24'. The floor and lower 3' of the walls are lined with stainless steel. The floor slopes to a drain. An alarm sounds when liquid is detected. Floor is drained to VES-NCC-119.			
CAPACITY	**~200 Gallons**			
NOTES:	**Receives:** The waste is airlifted to VES-NCC-152 from VES-NCC-101. **Output:** The waste is gravity fed to the EVAP-NCC-150 or overflows back to VES-NCC-101.			

UNIT NAME:	**Evaporator Flash Column VES-NCC-150**		**BUILDING NO.**	**CPP-659**
NUMBER OF UNITS	1	**PROCESS CODE**	S02/X99	
Description:	Size: The column tank has an approximate diameter of 5' 6". and a height of 21' 6" from bottom to the top 14" flange. This tank is vertical and cylindrical with domed ends. It is constructed of G-30 Hastelloy stainless steel. Secondary Containment: Located in a concrete cell 32' 4" x 24'. The floor and lower 3' of the walls are lined with stainless steel. The floor slopes to a drain. An alarm sounds when liquid is detected. Floor is drained to VES-NCC-119.			
Capacity	**~2,600 Gallons**			
Notes:	Receives: Waste is airlifted to VES-NCC-152 and then gravity fed to VES-NCC-150. Output: The overheads are transferred to VES-NCC-122. The bottoms are transferred to VES-NCC-119 or VES-NCC-101.			

UNIT NAME:	**Fluoride Hot Sump Tank VES-NCC-119**		**BUILDING NO.**	**CPP-659**
NUMBER OF UNITS	1	**PROCESS CODE**	S02/T01	
Description:	Size: The tank is a horizontal, cylindrical tank with domed ends. It has an approximate diameter of is 9' and length of 16'. It is constructed of Nitronic 50 stainless steel. Secondary Containment: Located in a concrete cell – 24' 2" x 24' 6" x 17' 6". The floor and walls are lined with stainless steel. This area is also connected to an adjacent valve access room 19' 6" by 11' 10". The floor and lower 3' of the wall is lined with stainless-steel. The floor is sloped to a sump that can be jetted to VES-NCC-119. The sump is equipped with a liquid level indicator and an alarm.			
Capacity	**~6,500 Gallons**			
Notes:	Receives: Normally receives wastes from floor drains, VES-NCC-150, VES-NCC-101, VES-NCC-102, VES-NCC-103, and VES-NCC-108. Output: The waste can be jetted or pumped to the evaporator feed system, the PEWE, or TFF.			

UNIT NAME:	**Non-fluoride Hot Sump Tank VES-NCC-122**		**BUILDING NO.**	**CPP-659**
NUMBER OF UNITS	1	**PROCESS CODE**	S02/T01	
Description:	Size: The tank is a horizontal cylindrical tank with domed ends. It has an approximate diameter is 7' 6" and a length of 14'. It is constructed of Nitronic 50 stainless steel. Secondary Containment: Located in a concrete cell 24' 2" x 24' 6" x 17' 6". The floor and walls are lined with stainless steel. This area is also connected to an adjacent valve access room – 19' 6" by 11' 10". The floor and lower 3' of the wall is lined with stainless-steel. The floor is sloped to a sump that can be jetted to VES-NCC-119. The sump is equipped with a liquid level indicator and an alarm.			
Capacity	**~4,300 Gallons**			
Notes:	Receives: Normally receives wastes from floor drains, HE-NCC-351, VES-NCD-122, and VES-NCD-129. Output: The waste can be jetted to the evaporator feed system, the PEWE, VES-NCC-119, or TFF.			

UNIT NAME:	**Scrub Hold Tank VES-NCC-108**		**BUILDING NO.**	**CPP-659**
NUMBER OF UNITS	1	**PROCESS CODE**	S02/T01	
Description:	Size: The tank is a horizontal, cylindrical tank with domed ends, an approximate diameter of 5' and a length of 12'. Secondary Containment: Located in a concrete cell – 33' 4" x 16' 3". The floor and lower 3' of the walls are lined with stainless steel. A sloped, 1"-deep gutter runs along the length of the east wall. The floor drain line is equipped with a liquid level indicator and an alarm. Containment of solution is provided by the floor drain, which directs solution to VES-NCC-119.			
Capacity	**~2,000 Gallons**			
Notes:	Receives: Condensed liquid from the equipment vent system. Output: The waste can be jetted to VES-NCC-119.			

UNIT NAME:	**Mist Collector VES-NCC-116**		**BUILDING NO.**	**CPP-659**
NUMBER OF UNITS	1	**PROCESS CODE**	S02	
Description:	Size: The tank is vertical and cylindrical with domed ends, an approximate diameter of 3' 6" and a height of 7' 6". It is designed to remove any liquid from the process and vessel offgas mixture entering the vessel. It is constructed of Type 304 stainless steel Secondary Containment: Located in a concrete cell – 26' 6" x 31' 6". The floor and lower 3' of the walls are lined with stainless steel. The floor has a sump with leak detection. Upon high level alarm, the collected liquid is drained to VES-NCC-122.			
Capacity	**~500 Gallons**			
Notes:	Receives: Vapor from the evaporator POG before the off-gas is released to APS. Output: The waste is gravity fed to VES-NCC-119.			

UNIT NAME:	**Vent Condenser Knockout Drum VES-NCC-136**		**BUILDING NO.**	**CPP-659**
NUMBER OF UNITS	1	**PROCESS CODE**	S02	
Description:	Size: The tank is a vertical, cylindrical vessel with domed ends, an approximate diameter of 16" and a height of 6'. It is constructed of Type 304 stainless steel. Secondary Containment: Located in a concrete cell – 26' 6" x 31' 6". The floor and lower 3' of the walls are lined with stainless steel. The floor has a sump with leak detection. Upon high level alarm, the collected liquid is drained to VES-NCC-122.			
Capacity	**~60 Gallons**			
Notes:	Receives: Vapor from the evaporator POG before the off-gas is released to the APS. Output: The waste is gravity fed to VES-NCC-108.			

IV.A.5 The following component is integral equipment to the ETS distillation system. Failure of this component will result in the shut down of the ETS distillation unit. This component may contain de minimus volumes of waste during operations and shut down.

<u>EVAPORATOR UNIT (EVAP-NCC-150)</u>

HE-NCC-351 Condenser

IV.A.6. INTEGRATED WASTE TREATMENT UNIT (IWTU)

UNIT NAME:	**Waste Feed Tank, VES-SRC-131**		**BUILDING NO.**	**CPP-1696**
NUMBER OF UNITS	1	**PROCESS CODE**	S02/T01	
DESCRIPTION:	**Size:** The feed tank is a vertical, cylindrical vessel with domed ends, with an approximate diameter of 7' and 8' 9" in height. It is constructed of Type 304L stainless steel. **Secondary Containment:** Located in a shielded cell – 37' 2" x 34' 5. The floor and lower 2' of the walls are lined with stainless steel. The floor has a sump (1'6" x 1'6" x 1'6") with leak detection. Upon high level alarm, the collected liquid is jetted to VES-NCC-101, VES-NCC-102, or VES-NCC-103. The sump may be jetted back to VES-SRC-131 if this vessel is not the source of the liquid.			
CAPACITY	**~2,170 Gallons**			
NOTES:	**Receives:** Liquid waste from the NWCF Hold Tanks, VES-NCC-102 and -103 and CPP-1696 sumps **Outputs:** The waste is normally pumped to the DMR. It can also be pumped to VES-NCC-101, VES-NCC-102, or VES-NCC-103.			

UNIT NAME:	**Product Receiver/Coolers VES-SRC-190 and -191**		**BUILDING NO.**	CPP-1696
NUMBER OF UNITS	3	**PROCESS CODE**	S02	
DESCRIPTION:	**Size:** The two Product Receiver/Cooler tanks are identical vertical, cylindrical vessels with domed tops and cone-shaped bottoms. They are approximately 4' in diameter and 7' 9" in height. They are constructed of Type 316H stainless steel. **Secondary Containment:** Located in shielded cells – 17' 6" x 23' 8". The floor and lower 1' of the walls are lined with stainless steel. The floor has a sump (1' x 1' x 1') with leak detection. Upon high level alarm, the collected liquid is pumped to VES-SRC-131.			
CAPACITY	**~512 Gallons Each**			
NOTES:	**Receives:** Primarily receives sodium carbonate based granular solid treatment product from the DMR. Also, receives fines from the Process Filter, Offgas Filter, Product Receiver Filter, and Vacuum Filter. **Outputs:** The IWTU treatment product is gravity loaded into canisters for storage and transport for ultimate disposal.			

UNIT NAME:	**Firewater Collection Tank TK-SRE-196**		**BUILDING NO.**	**CPP-1696**
NUMBER OF UNITS	1	**PROCESS CODE**	S02	
DESCRIPTION:	**Size:** The Firewater Collection Tank is a horizontal, cylindrical vessel with domed ends. It is approximately 32' long and 9' in diameter. **Secondary Containment:** The Firewater Collection Tank is a double shelled tank that is directly buried in the soil. The tank is equipped with leak detection and the ability to remove liquid from the annulus to appropriate containers. Any liquids collected in the tank will be removed via an external portable pump.			
CAPACITY	**~15,000 Gallons**			
NOTES:	**Receives:** During a fire incident, this tank will collect firewater from the Process and Building HEPA Filters and the Mercury Adsorbers. **Output:** If removal of firewater from this tank is necessary, a portable pump will be used to empty the contents.			

UNIT NAME:	**Condensate Collection Tank TK-SRH-141**		**BUILDING NO.**	**CPP-1696**
NUMBER OF UNITS	1	**PROCESS CODE**	S02	
DESCRIPTION:	**Size:** The Condensate Collection Tank is a horizontal, double walled, rectangular vessel. It's dimensions are approximately 4' x 2' x 2'. **Secondary Containment:** Double walled tank with leak detection. Any collected liquid is removed and placed in appropriate containers.			
CAPACITY	**~120 Gallons**			
NOTES:	**Receives:** condensate from the off-gas system including the IWTU stack. **Output:** pumped to the VES-SRC-131.			

IV.A.6.1. The following components are integral to the Integrated Waste Treatment Unit. Failure of one of these components will result in the shut down of the associated IWTU. These components may contain waste during operation and/or shut downs.

P-SRC-231	Waste Feed Pump
VES-SRC-140	Denitration and Mineralization Reformer
SPL-SRC-440	DMR Coal Separator
F-SRC-153	Process Gas Filter
VES-SRC-160	Carbon Reduction Reformer
COL-SRC-160	Offgas Cooler
F-SRC-160	Offgas Filter
F-SRH-141A/B	Mercury Adsorbers
F-SRC-191	Product Receiver Filter
VES-SRC-180	Product Receiver Filter Product Pump
F-SRC-190	Product Handling Vacuum Filter

IV.B. PERMITTED AND PROHIBITED WASTES IN THE INTEC LIQUID WASTE MANAGEMENT SYSTEM UNITS

IV.B.1. Storage of mixed wastes in tanks is authorized in the tanks identified in Permit Condition IV.A. of this Permit.

IV.B.2. Discharge of hazardous only waste, including de minimus volumes, to the ILWMS is not authorized.

IV.B.3. The Permittee may store the mixed waste identified in the Part A of Attachment 1 of this Permit, in the tanks identified in Permit IV.A., as modified below:

IV.B.3.a. If a prohibited waste [see Attachment 2, Section C-2a(1)] is identified in the ILWMS the following shall occur:

IV.B.3.a.1. The affected tanks and process lines shall be isolated from the remainder of the ILWMS until such time as the Director approves the completed remedial measures.

IV.B.3.a.2. A notification will be sent to DEQ within seven (7) days, in accordance with Permit Condition I.Y., and shall include at least the following information:

- A list of the affected tanks and process lines isolated;
- A description of the prohibited waste including volume and potential hazards;
- Proposed measures necessary to neutralize or remove the prohibited waste;
- Proposed schedule to remediate the affected tanks; and
- Proposed measures to prevent recurrences.

IV.B.3.b. The Director shall approve all remedial measures prior to implementation.

IV.B.3.c. The affected tanks and ancillary equipment shall remain isolated until such time as the Director approves the completed remedial measures.

IV.C. SECONDARY CONTAINMENT AND CONTAINMENT SYSTEM SUMPS

IV.C.1. The Permittee shall operate and maintain Secondary Containment Systems that are capable of detecting and collecting releases, and which prevent any migration of waste or accumulated liquid out of the system to the soil, ground water, or surface water during use of the tank systems, in accordance with IDAPA 58.01.05.008 [40 CFR § 264.193] and Attachment 1 of this Permit.

IV.C.2. Secondary Containment Systems, materials of construction, and design calculations are located in Attachment 1 [D-2f(1)(b) and B-1] of the Permit.

IV.C.3. The following requirements apply to all ILWMS tank containment sumps:

IV.C.3.a. The liquid level in all tank sumps shall be monitored and recorded daily;

IV.C.3.b. The Permittee shall note in the Operating Record any rise in the sump level during waste management operations.

IV.C.3.c. If the liquid level in a sump exceeds the high/high setpoint or overflows the sump, the Permittee shall immediately comply with the requirements of IDAPA 58.01.05.008 [40 CFR § 264.196].

IV.C.4. The following requirements apply to ILWMS ancillary equipment (valve-box) containment sumps:

IV.C.4.a. Ancillary equipment sumps shall be checked for free liquids prior to initiating waste transfers. The presence of liquids shall be noted in the Facility Operating Record.

IV.C.4.b. The Permittee shall note in the Operating Record any rise in the sump level during waste management operations.

IV.C.4.c. If liquid levels overtop a sump during waste transfer operations, the Permittee shall immediately discontinue the waste transfer operation and take the necessary response actions, in accordance with Permit Condition IV.C.6. and IDAPA 58.01.05.008 [40 CFR § 264.196].

IV.C.4.d. If the liquid level in a sump increases during waste transfer operations but do not overtop the containment sump, the waste transfer may continue. Upon completion of the waste transfer, the Permittee shall comply with Permit Condition IV.C.6. and IDAPA 58.01.05.008 [40 CFR § 264.196(b)].

IV.C.5. In addition to the requirements of Permit Condition IV.C.3., the following requirements apply to VES-NCC-119 only:

IV.C.5.a. Detection of liquids in the VES-NCC-119 sump shall be reported in accordance with Permit Condition I.T.

IV.C.5.b. The operator shall determine if the source of sump liquids is a leak in VES-NCC-119

IV.C.5.b.i. If the source of liquids is determined to be non-waste (e.g., steam leak, pump priming water, etc) then operations of VES-NCC-119 may continue provided the level of liquids remains below the action levels set in Permit Condition IV.C.3;

IV.C.5.b.ii. If the source of liquids either is a leak in VES-NCC-119 or can not be determined, the Permittee shall respond in accordance with IDAPA 58.01.05.008 [40 CFR §264.196]. This includes closing the secondary containment sump drain lines that empty to VES-NCC-119.

IV.C.6. The Permittee shall immediately remove a tank system from service if there is a leak or spill from the tank system Secondary Containment, or if the system or Secondary Containment are unfit for use, in accordance with IDAPA 58.01.05.008 [40 CFR § 264.196]. The Permittee shall then:

IV.C.6.a. Immediately stop the flow of hazardous waste into the tank system or Secondary Containment System and inspect the system to determine the cause of the release, in accordance with IDAPA 58.01.05.008 [40 CFR § 264.196(a)] and Attachment 1 and 7 [D-2f(1)(b) and G-4] of this Permit.

IVC.6.b. Within 24 hours, remove as much of the waste as is necessary to prevent further releases of hazardous waste and to allow inspection and repair of the tank system, including the Secondary Containment System, in accordance with IDAPA 58.01.05.008 [40 CFR § 264.196(a) and (b)], and Attachment 1 (D-2f(1)(b)) of this Permit.

IV.C.6.b.1. If, after pumpable waste is removed from a sump, liquids continue to be detected, the facility shall:

- Notify DEQ of the sump involved, volume of liquid, and proposed path forward within seven (7) days; and
- The Permittee shall initiate corrective measures to remove liquids from the sump within seven (7) days of notifying DEQ. Removal by evaporation of non-pumpable (using existing steam jets) volumes of liquid is authorized.

IV.C.6.c. Follow the verbal and written reporting requirements for any release to the environment, in accordance with Permit Condition I.T. of this Permit.

IV.C.6.d. The Permittee shall follow Permit Conditions IV.C.6.b and IV.C.6.c of this Permit for de minimis spills into the secondary containment system from normal treatment processes (i.e., transfers into and out of tanks, condensate drippage, etc.).

IV.C.7. The Permittee shall isolate and close any unfit portion of the ILWMS System, in accordance with IDAPA 58.01.05.008 [40 CFR § 264.197], Permit Condition II.K., and Attachments 8 and 8A of this Permit unless he satisfies the following requirements:

IV.C.7.a. For a release caused by a spill that has not damaged the integrity of the system, the Permittee shall remove the released waste and make any necessary repairs before returning the tank system to service, in accordance with IDAPA 58.01.05.008 [40 CFR § 264.196(e)(2)].

IV.C.7.b. For a release caused by a leak from a primary tank system to a Secondary Containment System, the Permittee shall repair the tank system prior to returning it to service, in accordance with IDAPA 58.01.05.008 [40 CFR § 264.196(e)(3)].

IV.C.7.c. If the Permittee replaces a component of the tank system to eliminate the leak, that component must satisfy the requirements for new tank systems or components in IDAPA 58.01.05.008 [40 CFR §§ 264.192 and 264.193].

IV.C.8. If the Permittee has repaired a tank system, in accordance with Permit Condition III.C.7. of this Permit, and the repair has been extensive (e.g., installation of an internal liner, repair of a ruptured primary containment or Secondary Containment vessel), the tank system must not be returned to service until the Permittee obtains a certification by an independent, qualified, registered, professional engineer that the repaired system is capable of handling hazardous waste without release for the intended life of the system. The certification shall be submitted to the Director within seven (7) days after returning the tank system to use, in accordance with IDAPA 58.01.05.008 [40 CFR § 264.196(f)], Permit Condition I.W., and retained in accordance with Permit Conditions I.Z. and II.J., and Attachment 4 [F-2b(2)(a)] of this Permit.

IV.D. TANK SYSTEM OPERATING CONDITIONS

IV.D.1. The Permittee shall not place waste or treatment reagents in a tank system if they could cause the tank, ancillary equipment, or containment system to rupture, leak, corrode, or otherwise fail, in accordance with IDAPA 58.01.05.008 [40 CFR § 264.194(a)] and Attachments 1, 2, and 6 of this Permit.

IV.D.2. The Permittee shall use appropriate controls and practices to prevent spills and overflows from the tank or containment systems, in accordance with IDAPA 58.01.05.008 [40 CFR § 264.194(b)(1)(2)] and the following Table:

INTEC LIQUID WASTE MANAGEMENT SYSTEM

TANK DIMENSIONS, HIGH ALARM SETPOINTS, AND OVERFLOW

TANK	APPROXIMATE OUTSIDE DIMENSIONS	HIGH ALARM SETPOINTNOT TO EXCEED[1]	OVERFLOW (IF ALARMS IGNORED)
VES-WL-132	11’ 0” × 9’ 0”	9” water column (wc) (4,230 Gallons)	Designed to Overflow to VES-WL-133
VES-WL-133	10’ 0” × 34’ 0”	109” wc[4] (18,000 gallons)	Overflows to the Vault Sump, Which is Equipped with Leak Detection
VES-WL-102	10’ 0” × 33’ 0”	104” wc[4] (17,000 gallons)	Overflows to VES-WL-101
VES-WL-108	5’ 8” × 2’ 0”[2]	NA	Designed to Overflow to VES-WL-131 or VES-WL-133
VES-WL-109	7’ 2”× 3’ 0”[2]	NA	Designed to Overflow to VES-WL-133 or VES-WL-102
EVAP-WL-129	19’ 6” × 3’ 0”	75” wc[4] (750 gallons)	Overflows to VES-WL-131 or VES-WL-134
EVAP-WL-161	19’ 6” × 3’ 0”	75” wc[4] (750 gallons)	Overflows to VES-WL-131
VES-WL-131	2’ 0” × 2’ 10”	18” wc[3] (59 gallons)	Overflows to VES-WL-161, VES-WL-129, VES-WL-106, VES-WL-107, VES-WL-163, or VES-WL-134

INTEC LIQUID WASTE MANAGEMENT SYSTEM TANK DIMENSIONS, HIGH ALARM SETPOINTS, AND OVERFLOW			
TANK	**APPROXIMATE OUTSIDE DIMENSIONS**	**HIGH ALARM SETPOINTNOT TO EXCEED[1]**	**OVERFLOW (IF ALARMS IGNORED)**
VES-WL-134	8’ 9” × 3’ 6”	90” wc (450 gallons)	Overflows to VES-WL-129, VES-WL-161, VES-WL-131, VES-WL-106, VES-WL-107, or VES-WL-163
VES-WL-101	10’ 0” × 33’ 0”	104” wc[4] (E), 123” wc (P) (17,000 gallons)	Overflows to VES-WL-102
VES-WL-111	3’ 6” × 4’ 8” × 12’ 0”	34” wc[4] (1,275 gallons)	Overflows to VES-WL-101, VES-WL-102, or VES-WL-133
VES-WL-106	14’ 0” × 8’ 0”	130” wc[3] (4,250 gallons)	Overflows to VES-WL-107, VES-WL-163, VES-WL-131, VES-WL-129, VES-WL-161, or VES-WL-134
VES-WL-107	14’ 0” × 8’ 0”	130” wc[3] (4,250 gallons)	Overflows to VES-WL-106, VES-WL-163, VES-WL-131, VES-WL-129, VES-WL-161, or VES-WL-134
VES-WL-163	14’ 0” × 8’ 0”	130” wc[3] (4,250 gallons)	Overflows to VES-WL-106, VES-WL-107, VES-WL-131, VES-WL-129, VES-WL-161, or VES-WL-134
VES-WM-100	10’ 0” × 33’ 0”	100” wc[4] (16,950 gallons)	Administratively controlled to prevent overflow.
VES-WM-101	10’ 0” × 33’ 0”	100” wc[4] (16,950 gallons)	Administratively controlled to prevent overflow.
VES-WM-102	10’ 0” × 33’ 0”	94” wc[4] (E), 135” wc (P) (16,000 gallons)	Overflows to VES-WM-101

INTEC LIQUID WASTE MANAGEMENT SYSTEM TANK DIMENSIONS, HIGH ALARM SETPOINTS, AND OVERFLOW			
TANK	**APPROXIMATE OUTSIDE DIMENSIONS**	**HIGH ALARM SETPOINTNOT TO EXCEED[1]**	**OVERFLOW (IF ALARMS IGNORED)**
VES-WL-135	10” × 1’ 6”	12” wc (10 gallons)	New Waste Calcining Facility Off-gas Line or the Vault Sump, Which is Equipped with Leak Detection
VES-WL-136	10” × 1’ 6”	12” wc (10 gallons)	New Waste Calcining Facility Off-Gas Line or the Vault Sump, Which is Equipped with Leak Detection
VES-WL-137	13” × 2’ 0”	18” wc (28 gallons)	Overflows to VES-OGF-132, VES-WL-104, or the Vault Sump, Which is Equipped with Leak Detection
VES-WL-138	13” × 2’ 0”	18” wc (28 gallons)	Overflows to the Vault Sump, Which is Equipped with Leak Detection
VES-WL-139	10” × 1’ 6”	12” wc (10 gallons)	Overflows to the Vault Sump, Which is Equipped with Leak Detection
VES-WL-142	10” × 1’ 6”	12” wc (10 gallons)	Overflows to the Vault Sump, Which is Equipped with Leak Detection
VES-WL-144	13” × 2’ 0”	18” wc (28 gallons)	Overflows to the Vault Sump, Which is Equipped with Leak Detection
VES-WL-150	2’ 3” × 2’ 0”	31” wc[3] (48 gallons)	Overflows to the Vault Sump, Which is Equipped with Leak Detection
VES-WLK-197	3’ 0” × 5’ 6”	28” wc[3] (225 gallons)	Overflows to VES-WLL-195
FRAC-WLL-170	28’ 6” × 3’ 6”[2]	40” wc[3, 4] (325 gallons)	Overflows to VES-WLL-195

INTEC LIQUID WASTE MANAGEMENT SYSTEM TANK DIMENSIONS, HIGH ALARM SETPOINTS, AND OVERFLOW			
TANK	**APPROXIMATE OUTSIDE DIMENSIONS**	**HIGH ALARM SETPOINTNOT TO EXCEED[1]**	**OVERFLOW (IF ALARMS IGNORED)**
FRAC-WLK-171	28' 6" × 3' 6"[2]	40" wc[3, 4] (325 gallons)	Overflows to VES-WLL-195
VES-WLL-195	3' 0" × 5' 9"	28" wc[4] (220 gallons)	Overflows to FRAC-WLL-170, FRAC-WLK-171, or the Vault Sump, Which is Equipped with Leak Detection
VES-NCR-171	11' 0" × 33' 8"	109" wc[4] (21,300 gallons)	Overflows to the Vault Sump, Which is Equipped with Leak Detection
VES-NCR-173	4' 8" × 2' 0"	NA	Designed to Overflow to VES-NCR-171
VES-NCC-101	9' 6" x 13'	113" wc[3 and 4] (4910 gallons)	Overflows to VES-NCC-119
VES-NCC-102	8' 1" x 12'	111" wc[3 and 4] (3455 gallons)	Overflows to VES-NCC-119
VES-NCC-103	8' 1" x 12'	111" wc[3 and 4] (3455 gallons)	Overflows to VES-NCC-119
VES-NCC-152	2' 1" x 9' 2"	N/A	Designed to Overflow to VES-NCC-101
VES-NCC-150	5' 6" x 21' 6"	158" wc[3 and 4] (2362 gallons)	Overflows to VES-NCC-122
VES-NCC-119	9' 1" x 13' 6"	84" wc[3 and 4] (5765 gallons)	Overflows to room 101 that has a sump with leak detection
VES-NCC-122	7' 6" x 14'	78" wc[3 and 4] (4180 gallons)	Overflows to VES-NCC-119
VES-NCC-108	5' x 14'	36" wc[4] (1500 gallons)	Overflows to VES-NCC-119
VES-NCC-116	3' 6" x 7' 6"	12" wc (70 gallons)	Overflows to the offgas system
VES-NCC-136	1' 4" x 6'	12 inches (17 gallons)	Overflows to the offgas system
VES-SRC-131	7' x 8' 9"	95% of capacity[3] (2,050 gallons)	Overflows to the SU-SRC-190 sump, which is equipped with leak detection

INTEC LIQUID WASTE MANAGEMENT SYSTEM TANK DIMENSIONS, HIGH ALARM SETPOINTS, AND OVERFLOW			
TANK	**APPROXIMATE OUTSIDE DIMENSIONS**	**HIGH ALARM SETPOINTNOT TO EXCEED[1]**	**OVERFLOW (IF ALARMS IGNORED)**
TK-SRE-196	9' x 32'	95% of capacity (14,250 gallons)	Overflows to the Building HEPA filter enclosure
VES-SRC-190, VES-SRC-191	4' x 7' 9"	95% of capacity	Dry solids
TK-SRH-141	4' x 2' x 2'	~50% of capacity (~60 gallons) and high-high alarm at 86% (103 gallons)	Overflows to vent inlet

1 High alarm set points may be exceeded on a case-by-case basis (e.g., to allow tanks to be filled to capacity with water to provide shielding during periods of maintenance, or when tanks are designed to overflow to other tanks). When allowed, notations will be made in the Operating Record. In actual practice the high alarm setpoint will be set at or below the indicated value. Alarm set points for tanks with more than one instrument have a setpoint for both instruments listed. The new electronic, or DCS, instruments are designated as (E) and the older pneumatic-type instruments are designated as (P). Volume given is based on liquids with a specific gravity of 1.0; actual volume is calculated based on the measured specific gravity.
2 Height measured from the bottom of the lower connection to the top of the upper connection.
3 This is a high-high alarm setpoint.
4 Density compensated instrument. Density compensation is used to read true level that will not be affected by the solution density.

IV.D.2.a. Any overfill events, except as authorized in IV.D.7., shall be recorded in the Facility Operating Record and included in either the Permit Condition I.T. or I.U. Report (as appropriate).

IV.D.2.b. The tank operating procedures shall be reviewed and modified, as appropriate, to prevent recurrences of overfill situations.

IV.D.3. Waste transfers are to be minimized to reduce the potential for releases to the environment.

IV.D.4. Tank inventory records, including tank volume changes as a result of transfers, shall be maintained as part of the Operating Record, in accordance with Permit Condition II.J.

IV.D.5. If the waste volume increase in the influent and the related decrease in the effluent tanks vary by more than (+)10 percent (10%) or (-)3 percent (3%), but there is no evidence of a release, then the circumstances must be reported in the Permit Condition I.U. Report. Out of specification transfers between tanks with significant capacity differences (i.e., where one tank is greater than three times the size of the other), that have no evidence of release, will be documented in the operating record but do not have to be included in this report.

IV.D.6. If a release during transfer is suspected, based on inconsistent tank volumes, detection of liquids in the Secondary Containment System or other information, the requirements of Permit Condition I.T.1. shall be followed.

IV.D.7. Completely filling a tank with water for shielding purposes during maintenance/ manned entry shall be noted in the Facility Operating Record. No additional reporting is required unless the procedure overfills the tank, resulting in a discharge to the Secondary Containment System.

IV.D.8. Transfers through lines equipped with carboys, or other containers, used as leak detection devices, must be monitored before, during (as appropriate), and immediately following transfers to ensure that the containers do not overflow, resulting in a spill or release to the environment. Such monitoring will be documented in the facility operating record. If liquids are detected in quantities that exhibit a potential for overflow, the transfer will be terminated.

IV.E. INSPECTION SCHEDULES AND PROCEDURES

IV.E.1. The Permittee shall develop and maintain a schedule and procedures for inspecting the overfill controls, in accordance with IDAPA 58.01.05.008 [40 CFR § 264.195(a)] and Attachment 4 of this Permit.

IV.E.2. The Permittee shall inspect the following, at least once each operating day, in accordance with Attachment 4 (F-2a and Appendices F-2 – F-7) of this Permit:

IV.E.2.a. Data gathered from monitoring and leak detection equipment and overfill controls to ensure that the tank system is being operated according to design; and

IV.E.2.b. The construction materials and the area immediately surrounding the externally accessible portion of the tank system, including the Secondary Containment System and ancillary equipment, to detect corrosion or signs of release of hazardous waste when performing equipment maintenance or repair inside a cell or vault.

IV.E.3. The Permittee shall visually inspect tanks and ancillary equipment, located within radiological containment areas, daily whenever the cells are entered. The inspection protocols for the initial entrance inspection, and on-going daily inspections, may be established as part of the specific work permit.

IV.E.4. The inspection protocols shall be placed in the Facility Operating Record.

IV.E.5. The results of all inspections shall be documented in accordance with Permit Condition II.J.1.

IV.F. IGNITABLE OR REACTIVE WASTES

Ignitable or reactive waste shall not be placed in the tank systems unless the waste is treated, rendered, or mixed before or immediately after placement in the tank systems so that:

IV.F.1. The resulting waste, mixture, or dissolved material no longer meets the definition of ignitable or reactive waste under IDAPA 58.01.05.005 [40 CFR §§ 261.21 or 261.23]; and

IV.F.2. The requirements of IDAPA 58.01.05.008 [40 CFR § 264.17(b)] are satisfied.

IV.G. INCOMPATIBLE WASTE

The Permittee shall not place incompatible waste or materials that are incompatible in the same tank system, except in accordance with IDAPA 58.01.05.008 [40 CFR § 264.199(a)].

MODULE V - TREATMENT IN TANKS

V.A. SOLIDS SETTLING, CHEMICAL ADDITION, WASTE BLENDING AND PH ADJUSTMENT

V.A.1. Treatment by solids settling is authorized in VES-WL-132.

V.A.2. Chemical addition, waste blending, and pH adjustment are permitted treatment activities in the following tanks:

VES-WL-133, VES-WL-102, VES-WL-101, VES-WL-111, VES-WM-100, VES-WM-101, VES-WM-102, VES-WL-106, VES-WL-107, VES-WL-163, VES-NCC-101, VES-NCC-102, VES-NCC-103, VES-NCC-108, VES-NCC-119, VES-NCC-122, and VES-SRC-131.

V.A.3. Treatment failure shall be indicated by the following:

V.A.3.a. The inability to achieve the treatment objective of creating waste that is acceptable to the ILWMS according to the WAC; or

V.A.3.b. The treatment tank reaching operational capacity prior to completion of the pH adjustment or blending operation.

V.A.4. If a specific treatment method fails the following shall occur:

V.A.4.a. All treatment failures shall be reported in the Permit Condition I.U. Report.

V.A.4.b. If a second treatment is performed on the same batch and the waste still does not meet the WAC, then:

- DEQ shall be notified within 72 hours via telephone or facsimile;
- The waste shall be re-characterized, and DEQ shall be provided with the new proposed treatment plan for that batch; and
- The current treatment procedure shall be revised through a Permit Modification to prevent repeated failures.

V.A.4.c. If a treatment procedure fails a second time, but on a different batch than that which failed earlier, the failure shall not only be reported in the Permit Condition I.U. Report, but the treatment procedure shall also be analyzed to determine the cause of the failures and how to prevent further failures.

V.A.4.d. If a treatment procedure fails three (3) times, it shall be reported in the Permit Condition I.U. Report and a new treatment method must be implemented through a Permit Modification in accordance with Permit Condition I.D.

V.A.5. Treatment volumes for each tank shall be subject to the limits found on Page 3c and 3d of 6 in the Part A, found in Attachment 1 of this Permit.

V.B. PERMITTED/PROHIBITED WASTE TO BE TREATED

V.B.1. Treatment of hazardous only (no radioactive waste component) waste is not authorized.

V.B.2. The Permittee may pH adjust or blend the wastes identified in Permit Condition IV.B.3. of this Permit, except that blending or pH adjustment of wastes to comply with LDR is not authorized.

V.B.3. Blending and/or pH adjustment is a pre-treatment process meant only to facilitate further treatment by evaporation/distillation in the PEWE, LET&D, ETS, or other INTEC Treatment Units.

V.B.4. Blending or pH adjustment to meet Land Disposal Restriction requirements is not authorized.

V.B.5. The Permittee shall minimize waste and material transfers through the ILWMS process lines since transfers increase the potential for releases to the environment.

V.B.6. Addition of acid to ensure radioactive components of the waste remain in solution to preclude the possibility of a criticality event, is not subject to regulation under this Permit except for the following:

V.B.6.a. The addition of materials to a tank shall not result in overfilling of the tank.

V.B.6.b. The Permittee shall ensure compliance with Permit Conditions IV.F. and IV.G. prior to initiating chemical addition procedures.

V.C. RECORD KEEPING

V.C.1. The Permittee shall record the following information associated with each blending operation or pH adjustment:

V.C.1.a. Date and time of treatment;

V.C.1.b. Tank where treatment occurs;

V.C.1.c. Initial volume of waste in tank;

V.C.1.d. Volume of waste added for blending or volume of acid/base added for pH adjustment;

V.C.1.e. Cross references to any waste analyses, including field methods, performed on the tank contents or documentation of the process knowledge used to determine the need for treatment;

V.C.1.f. Treatment failures as defined in Permit Condition V.A.3.; and

V.C.1.g. Final volume and composition (parameters of concern and underlying hazardous constituents) of the waste after blending and/or pH adjustment.

MODULE VI - MISCELLANEOUS TREATMENT

VI.A. TREATMENT BY DISTILLATION, EVAPORATION, OR STEAM REFORMING

The Permittee may treat aqueous liquid waste in the following treatment units:

VI.A.1. Process Equipment Waste Evaporators (PEWE).

VI.A.1.a. The PEWE consists of two (2) similarly designed thermo-siphon evaporators and associated ancillary equipment.

VI.A.1.b. A complete description of the PEWE is found in Attachment 1 of this Permit and summarized in Exhibit D-1 Attachment 1 of this Permit.

VI.A.2. Liquid Effluent Treatment and Disposal Facility (LET&D).

VI.A.2.a. The LET&D consists of two (2) fractionation columns and associated ancillary equipment.

VI.A.2.b. A complete description of the LET&D is found in Attachment 1 of this Permit and summarized in Exhibit D-2 Attachment 1 of this Permit.

VI.A.3. Evaporator Tank System (ETS)

VI.A.3.a. The ETS consists of a thermo-siphon evaporator and associated ancillary equipment.

VI.A.3.b. A complete description of the ETS is found in Attachment 1 of this Permit and summarized in Exhibit D-3 Attachment 1 of this Permit.

VI.A.4. Integrated Waste Treatment Unit (IWTU)

VI.A.4.a. The IWTU consists of two steam reformers and associated ancillary equipment.

VI.A.4.b. A complete description of the IWTU is found in Attachment 1 of this Permit.

VI.B. PERMITTED AND PROHIBITED WASTE

VI.B.1. The PEWE may process the waste described in Permit Condition IV.B., subject to the following supplemental conditions:

VI.B.1.a. Waste containing greater than or equal to 260 mg/l Hg may not be processed in the PEWE;

VI.B.1.b. Total organic carbon concentration in the feed shall be less than 800 parts per million;

VI.B.1.c. If the feed contains ≥ 50 ppm but ≤ 150 ppm chlorides, the following equation applies:
$[No_3]$ (in Molar) ≥ [Cl] (in ppm) x 0.006 + 0.1

This equation ensures that there are enough nitrates to passivate the stainless steel.

Waste containing greater than 150 ppm chlorides will not be processed in the PEWE.

VI.B.1.d. Feed shall contain a minimum of a 1:1 mole ratio of aluminum to fluoride; and

VI.B.1.e. Sulfate concentration shall be limited to less than, or equal to, 500 parts per million as fed.

VI.B.2. The LET&D may process only PEWE overhead condensate waste containing the waste codes identified in Permit Condition IV.B, subject to the following supplemental conditions:

VI.B.2.a. Waste containing greater than or equal to 260 mg per liter Hg may not be processed in the LET&D;

VI.B.2.b. Waste subject to regulation under IDAPA 58.01.05.008 [40 CFR Part 264 Subpart AA] may not be processed in the LET&D unless the requirements of Permit Condition II.M are satisfied; and

VI.B.2.c. Feed shall contain a minimum of a 1:1 mole ratio of aluminum to fluoride.

VI.B.3. The ETS may process the waste described in Permit Condition IV.B., subject to the following supplemental conditions;

VI.B.3.a. Waste containing greater than or equal to 3,000 ppm mercury will not be processed in the ETS;

VI.B.3.b. Feed shall contain a minimum of a 1:1 mole ratio of aluminum to fluoride, if fluoride is present in the feed;

VI.B.3.c. Maintain at least a 2:1 mole ratio of sodium to sulfate, as fed if the feed contains ≥ 500 ppm sulfate

VI.B.3.d. Waste containing greater than 5,000 ppm chloride in solution will not be processed in the ETS.

VI.B.4. The IWTU may process the waste described in Permit Condition IV.B., subject to the following supplemental conditions;

VI.B.4.a. Waste containing greater than or equal to 3,000 ppm mercury in solution will not be processed in the IWTU;

VI.B.4.b. Waste containing greater than 5,000 ppm chloride in solution will not be processed in the IWTU;

VI.B.4.c. Waste containing greater than 3,000 ppm fluoride in solution will not be processed in the IWTU

VI.C. OPERATING CONDITIONS

Permit conditions for PEWE, LET&D, ETS, and IWTU. If liquid is detected in the treatment unit sump the facility shall determine the following;

Source of the liquids. If the source can not be determined or if the source is mixed waste, the affected treatment unit shall be shut down until the source of the liquid is determined and appropriate action is taken in accordance with Permit Condition IV.C.

VI.C.1. Operating conditions for each of the distillation columns associated with the PEWE System shall include, but not be limited to, the following:

VI.C.1.a. The waste feed limit to each distillation column shall not exceed 500 gallons per hour throughput. Total combined waste feed for both evaporators shall not exceed 12,000 gallons per each twenty-four (24) -hour period.

VI.C.1.b. Steam, fed to the reboiler, shall be manually discontinued in the event the operating temperature exceeds 108°C.

VI.C.1.c. Shutdown shall be initiated when the specific gravity of the liquids in the evaporator equals or exceeds 1.3.

VI.C.1.d. Shutdown shall be initiated if the condenser outlet temperature exceeds 50°C.

VI.C.1.e. Shutdown shall be initiated if negative atmospheric pressure cannot be maintained in the VOG system providing vacuum for the PEWE.

VI.C.1.f. Shutdown shall be initiated if the 604 VOG System or the INTEC Process APS is malfunctioning, or the differential pressure across any HEPA filter bank exceeds five (5) inches of water.

VI.C.2. Operating conditions for each of the fractionation columns associated with the LET&D shall include, but not be limited to, the following:

VI.C.2.a. The combined maximum operating throughput for the two (2) LET&D fractionation columns shall be 1,100 gallons per hour, or 550 gallon per hour per fractionation column;

VI.C.2.b. Process shutdown shall be initiated if the fractionator level drops below ten (10) inches water column;

VI.C.2.c. Process shutdown shall be initiated if the temperature on Tray #1 exceeds 130°C;

VI.C.2.d. Process shutdown shall be initiated if the fractionator level rises above 40 inches water column;

VI.C.2.e. Process shutdown shall be initiated if the separator level exceeds ten (10) inches water column; or

VI.C.2.f. Process shutdown shall be initiated if the differential pressure across the HEPA filter exceeds five (5) inches water column or suddenly decreases.

VI.C.3. Operating conditions for the distillation column associated with the ETS shall include, but not be limited to, the following;

VI.C.3.a. The waste feed limit to the distillation column shall not exceed 500 gallons per hour throughput as determined by tank depletion in VES-NCC-101. Total waste feed shall not exceed 12,000 gallons per each twenty-four (24) -hour period.

VI.C.3.b. Steam fed to the reboiler shall be manually discontinued in the event the operating temperature exceeds 117°C as read on T150-1C thru 10C.

VI.C.3.c. Shutdown shall be initiated before the specific gravity of the liquids in the evaporator equals or exceeds 1.4 as read on D150-1C.

VI.C.3.d. Start-up shall not begin or shutdown shall be initiated if T-351-1 is not operating within normal parameters.

VI.C.3.e. Shutdown shall be initiated if the condenser HE-NCC-351 outlet temperature exceeds 60° C as read on T-351-1.

VI.C.3.f. Shutdown shall be initiated if atmospheric pressure exceeds 18 in. water column in the ETS as read on P150-1C.

VI.C.4. Operating conditions for the IWTU shall include, but not be limited to, the following:

VI.C.4.a. The waste feed limit to the DMR shall not exceed 3.5 gallons per minute;

VI.C.4.b. Shutdown of the liquid waste feed shall be initiated if the average bed temperature in the DMR drops below 580°C;

VI.C.4.c. Shutdown of the liquid waste feed shall be initiated if the average bed temperature in the DMR exceeds 700°C;

VI.C.4.d. Shutdown of the liquid waste feed shall be initiated if the average pressure above the bed in the DMR exceeds 12 psig;

VI.C.4.e. Shutdown of the liquid waste feed shall be initiated if the superficial fluidization velocity in the DMR drops below 0.3 ft/sec;

VI.C.4.f. Shutdown of the liquid waste feed shall be initiated if greater than 15% dry (rolling ten-minute average dry basis) hydrogen is detected in the DMR offgas as measured just after the Process Gas Filter ;

VI.C.4.g. Shutdown of the liquid waste feed shall be initiated if less than 1.0% dry (rolling ten-minute average dry basis) hydrogen is detected in the DMR offgas as measured just after the Process Gas Filter;

VI.C.4.h. Shutdown of the liquid waste feed shall be initiated if the average bed temperature in the CRR drops below 775°C;

VI.C.4.i. Shutdown of the liquid waste feed shall be initiated if the average bed temperature in the CRR exceeds 1150°C;

VI.C.4.j. Shutdown of the liquid waste feed shall be initiated if less than 0.5% (rolling ten-minute average dry basis) oxygen is detected in the CRR offgas;

VI.C.4.k. Shutdown of the liquid waste feed shall be initiated if the above-bed pressure in the CRR is greater than 0 psig (0” water column vacuum);

VI.C.4.l. Shutdown of the liquid waste feed shall be initiated if the temperature at the outlet of the Offgas Cooler exceeds 250°C;

VI.C.4.m. Shutdown of the liquid waste feed shall be initiated if the temperature at the inlet of the Process HEPA filters drops below 120°C;

VI.C.4.n. Shutdown of the liquid waste feed shall be initiated if the offgas temperature at the inlet to the Mercury Adsorber exceeds 180°C;

VI.C.4.o. Shutdown of the liquid waste feed shall be initiated if the offgas temperature at the inlet of the Mercury Adsorber drops below 120°C;

VI.C.4.p. Shutdown of the liquid waste feed shall be initiated if the level in the Nitrogen Supply System falls below 35,000 standard cubic feet, which is equal to approximately 5 system volume equivalents;

VI.C.4.q. If the differential pressure of any Process HEPA filter element exceeds 5" water column or suddenly decreases, the affected HEPA must be isolated and the filter replaced;

VI.C.4.r. If one of the in-bed thermocouples differs from the average temperature by more than 50°C, then corrective action will be taken including, as necessary:

- Checking the operability of the varying thermocouple;
- Modifying process parameters such as decreasing operating temperature, decreasing or isolating injection lines, and/or increasing the steam fluidizing gas rate to control any temperature variation in the fluidized bed;
- Decreasing or terminating the waste feed to the DMR;
- Replacing steam and oxygen fluidizing gas flow with nitrogen.

VI.C.4.s. There shall be no visible emissions, except water in an uncombined form from STK-SRE-140.

VI.C.5. The following requirements apply to the ILWMS miscellaneous units containment sumps:

VI.C.5.a The liquid level in all tank sumps shall be monitored and recorded daily;

VI.C.5.b. The Permittee shall note in the Operating Record any rise in the sump level during waste management operations.

VI.C.5.c. If the liquid level in a sump exceeds the high/high setpoint or overflows the sump, the Permittee shall immediately comply with the requirements of IDAPA 58.01.05.008 [40 CFR § 264.196].

VI.D. INSPECTIONS

The Permittee shall conduct inspections of the PEWE, LET&D, ETS, and IWTU in accordance with the schedules found in Attachment 4 as amended by Permit Condition IV.E.

VI.E. RECORD KEEPING AND REPORTING

VI.E.1. The Permittee shall document the following PEWE operations data in the Facility Operating Record:

VI.E.1.a. Volume of waste fed to the PEWE;

VI.E.1.b. Volume of PEWE bottoms waste and disposition;

VI.E.1.c. Volume of PEWE condensate waste and disposition;

VI.E.1.d. A calculation of material (steam) discharged per cycle from the PEWE System as a gas (i.e., Volume of discharge equals volume of input minus [volume of condensate plus volume of bottoms]);

VI.E.1.e. Waste analysis data, including underlying hazardous constituents, for each waste stream processed;

VI.E.1.f. Data demonstrating compliance with the operating requirements for the PEWE; and

VI.E.1.g. Waste feed shut downs including cause of shutdown, if unscheduled, and measures to prevent repeat shutdowns from the same cause/operating conditions.

VI.E.2. The Permittee shall document the following LET&D operations data in the Facility Operating Record:

VI.E.2.a. Volume of waste fed to the LET&D;

VI.E.2.b. Volume of nitric acids bottoms removed from the LET&D;

VI.E.2.c. Material balance determination of the volume of water vapor discharged to the INTEC Main stack as a result of processing PEWE condensate;

VI.E.2.d. Waste analysis data, including organic concentration and underlying hazardous constituents, for the condensate feed;

VI.E.2.e. Data demonstrating compliance with the operating requirements for the LET&D; and

VI.E.2.f. Waste feed shutdowns, including cause of shutdown if unscheduled, and measures to prevent repeat shutdowns from the same cause/operating conditions.

VI.E.3. The Permittee shall document the following ETS operations data in the Facility Operating Record:

VI.E.3.a. Volume of waste fed to the ETS;

VI.E.3.b. Volume of ETS bottoms waste and disposition;

VI.E.3.c. Volume of ETS condensate waste and disposition;

VI.E.3.d. Waste analysis data, including underlying hazardous constituents, for each waste stream;

VI.E.3.e. Data demonstrating compliance with the operating requirements for the ETS; and

VI.E.3.f. Unscheduled waste feed shutdowns, including cause of the unscheduled shutdown and measures to prevent repeat unscheduled shutdowns from the same cause/operating conditions.

VI.E.4 The Permittee shall document the following IWTU operations data in the Facility Operating Record:

VI.E.4.a. Volume of waste fed to the DMR;

VI.E.4.b. Volume of IWTU solids generated and disposition;

VI.E.4.c. Waste analysis data, including underlying hazardous constituents, for each waste stream;

VI.E.4.d. Data demonstrating compliance with the operating requirements for the IWTU; and

VI.E.4.e. Unscheduled waste feed shutdowns, including cause of the unscheduled shutdown and measures to prevent repeat unscheduled shutdowns from the same cause/operating conditions.

VI.F. START OF STEAM REFORMER OPERATIONS

VI.F.1. Prior to start of hazardous waste operations, DEQ must receive the certification of construction documents of Permit Condition I.R.

VI.F.2. Upon start of hazardous waste operations, consistent with IDAPA 58.01.05.008 and .012 [40 CFR § 264.601 and 40 CFR §270.62(a)], the Permittee may operate for up to 720 hours on waste feed to determine operational readiness prior to initiating the IWTU performance test described at Condition II.P.4 of this permit.

VI.F.3. The Permittee shall operate the IWTU consistent with the operational parameters set forth in Permit Condition VI.C.4. during this 720 hour period.

VI.F.4. This 720 hour start up period may be extended once for up to 720 additional hours, by the Director at the request of the applicant when good cause is shown.

VI.F.5. The Permittee shall maintain a running total of hours operated in the facility operating record to demonstrate compliance with the 720 operating hour limit.

VI.G. CLOSURE

The Permittee shall close the PEWE, LET&D, ETS Units, and IWTU in accordance with the approved Closure Plan, Attachments 8 and 8A of this Permit, as modified by Permit Condition II.K.

MODULE VII - CORRECTIVE ACTION

The Corrective Action Requirements for INTEC are addressed in the Volume 18 Partial-Permit.

OMB#: 2050-0034 Expires 11/30/2011

SEND COMPLETED FORM TO: The appropriate State or Regional Office.	United States Environmental Protection Agency **RCRA SUBTITLE C SITE IDENTIFICATION FORM**	
1. Reason for Submittal MARK ALL BOX(ES) THAT APPLY	**Reason for Submittal:** ❑ To provide an Initial Notification (first time submitting site identification information / to obtain an EPA ID number for this location). ❑ To provide Subsequent Notification of Regulated Waste Activity (to update site identification information for this location). ❑ As a component of a First RCRA Hazardous Waste Part A Permit Application. ☒ As a component of a Revised RCRA Hazardous Waste Part A Permit Application **(Amendment # Vol 14-April 12, 2011)** ❑ As a component of the Hazardous Waste Report (If marked, see sub-bullet below)	
	❑ Site was a TSD facility and/or generator of ≥1,000 kg of hazardous waste, >1 kg of acute hazardous waste, or >100 kg of acute hazardous waste spill cleanup in one or more months of the report year (or State equivalent LQG regulations	
2. Site EPA ID Number	**EPA ID Number:** ID4890008952	
3. Site Name	**Name:** IDAHO NATIONAL LABORATORY	
4. Site Location Information	**Street Address:**	
	City, Town, or Village: SCOVILLE	**County:** BUTTE. CLARK, JEFFERSON, BONNEVILLE, BINGHAM
	State: ID	**Country:** USA / **Zip Code:** 83415
5. Site Land Type	❑ Private ❑ County ❑ District ☒ Federal ❑ Tribal ❑ Municipal ❑ State ❑ Other	
6. NAICS Code(s) for the Site (at least 5-digit codes)	**A.** 92411	**B.** 54171
	C. 336992	**D.** Not Applicable
7. Site Mailing Address	**Street or P. O. Box:** 1955 FREMONT AVENUE	
	City, Town, or Village: IDAHO FALLS	
	State: ID	**Country:** USA / **Zip Code:** 83415
8. Site Contact Person	**First Name:** DONALD	**MI:** N / **Last Name:** RASCH
	Title: Team Lead, Compliance Team, Environmental Technical Support Division	
	Street or P. O. Box: 1955 FREMONT AVENUE	
	City, Town, or Village: IDAHO FALLS	
	State: ID	**Country:** USA / **Zip Code:** 83415
	Email: RASCHDN@ID.DOE.GOV	
	Phone: (208) 526-1511	**Ext.:** N/A / **Fax:** 208-526-1926
9. Legal Owner and Operator of the Site	**A. Name of Site's Legal Owner:** US DEPARTMENT OF ENERGY IDAHO OPERATIONS OFFICE	**Date Became Owner:** 01/01/1952
	Owner Type: ❑ Private ❑ County ❑ District ☒ Federal ❑ Tribal ❑ Municipal ❑ State ❑ Other	
	Street or P. O. Box: 1955 FREMONT AVENUE	**Phone:** (208) 526-1511
	State: ID	**Country:** USA / **Zip Code:** 83415
	B. Name of Sites Operator: CH2M-WG Idaho, LLC	**Date Became Operator:** 05/01/2005
	Operator Type: ☒ Private ❑ County ❑ District ❑ Federal ❑ Tribal ❑ Municipal ❑ State ❑ Other	

10. Type of Regulated Waste Activity (at your site)

Mark "Yes" or "No" for all current activities (as of the date submitting the form); complete any additional boxes as instructed.

A. Hazardous Waste Activities; Complete all parts 1-7.

Y ☒ N ❑ 1. Generator of Hazardous Waste

If "Yes" mark only one of the following - a,b, or c

☒ a. LQG: Generates, in any calendar month, 1,000 kg/mo kg/mo (2,200 lbs./mo) or more of hazardous waste; **or** Generates an any calendar month, or accumulates at any time, more than 1 kg/mo (2.2 lbs./mo) of acute hazardous waste **or** Generates, in any calendar month **or** accumulates at any time, more than 199 kg/mo (220 lbs./mo) of acute hazardous spill cleanup material.

❑ b. SQG: 100 to 1,000 kg/mo (220 - 2,200 lbs./mo.) of non-acute hazardous waste.

❑ c. CESQG: Less than 100 kg/mo (220 lbs./mo.) of non-acute hazardous waste

If "Yes" above, indicate other generator activities.

Y ❑ N ☒ d. Short-Term Generator (generate from a short term or one-time event and not from on-going processes). If "Yes", provide an explanation in the Comments section

Y ☒ N ❑ e. United States Importer of Hazardous Waste

Y ☒ N ❑ f. Mixed Waste (hazardous and radioactive) Generator

Y☒ N ❑ 2. Transporter of Hazardous Waste. If "Yes", mark all that apply

☒ a. Transporter

❑ b. Transfer Facility (at your site)

Y☒ N ❑ 3. Treater, Storer, or Disposer of Hazardous Waste: Note: A hazardous waste permit is required for these activities

Y☒ N ❑ 4. Recycler of Hazardous Waste

Y❑ N ☒ 5. Exempt Boiler and/or Industrial Furnace. If "Yes", mark all that apply.

❑ a. Small Quantity On-site Burner Exemption

❑ b. Smelting, Melting, and Refining Furnace Exemption

Y❑ N ☒ 6. Underground Injection Control

Y☒ N ❑ 7. Receives Hazardous Waste from Off-site

B. Universal Waste Activities; Complete all parts 1-2

Y☒ N ❑ 1. Large Quantity Handler of Universal Waste (you accumulate 5,000 kg or more) [refer to your State regulations to determine what is regulated]. Indicate types of universal waste managed at your site. If "Yes", mark all that apply

a. Batteries	☒
b. Pesticides	☒
c. Mercury containing equipment	☒
d. Lamps	☒
e. Other (specify)_____	❑
f. Other (specify)_____	❑
g. Other (specify)_____	❑

Y ☒ N ❑ 2. Destination Facility for Universal Waste

Note: A hazardous waspte permit may be required for this activity

C. Used Oil Activities; Complete all parts 1-4.

Y❑ N ☒ 1. Used Oil Transporter

If "Yes", mark all that apply.

❑ a. Transporter

❑ b. Transfer Facility

Y❑ N ☒ 2. Used Oil Processor and/or Re-refiner

If "Yes", mark each that applies

❑ a. Processor

❑ b. Re-refiner

Y❑ N ☒ 3. Off-Specification Used Oil Burner

Y❑ N ☒ 4. Used Oil Fuel Marketer

If "Yes", mark each that applies

❑ a. Marketer Who Directs Shipment of Off-Specification Used Oil to Off-Specification Used Oil Burner

❑ b. Marketer Who First Claims the Used Oil Meets the Specifications

D. Eligible Academic Entities with Laboratories - Notification for opting into or witdrawing from managing laboratory hazardous wastes pursuant to 40 CFR Part 262 Subpart K.

♦ You must check with your State to determine if you are eligible to manage laboratory hazardous wastes pursuant to 40 CFR Part 262 Subpart K

❑ 1. Opting into or currently operating under 40 CFR Part 262 Subpart K for the management of hazardous wastes in laboratories

See the item-by-item instructions for definitions of types of eligible academic entities. Mark all that apply:

❑a. College or University

❑b. Teaching Hospital that is owned by or has a formal written affilation agreement with a college or university

❑c. Non-profit Institute that is owned by or has a formal written affiliation agreement with a college or university

❑ 2. Withdrawing from 40 CFR Part 262 Subpart K for the management of hazardous wastes in laboratories

11. Description of Hazardous Wastes

A. Waste Codes for Federally Regulated Hazardous Wastes. Please list the waste codes of the Federal hazardous wastes handled at your site. List them in the order they are presented in the regulations (e.g., D001, D003, F007, U112). Use an additional page if more spaces are needed.

See Attached Form OMB#: 2050-0034, Item 9 page(s) 5 of 6

B. Waste Codes for State-Regulated (i.e., non-Federal) Hazardous Wastes. Please List the waste codes of the State-regulated hazardous wastes handled at your site. List them in the order they are presented in the regulations. Use an additional page if more spaces are needed.

12. Notification of Hazardous Secondary Material (HSM) Activity

Y☐ N ☒ Are you notifying under 40 CFR 260.41 that you will begin managing, are managing or will stop managing hazardous secondary material under 40 CFR 261.2(2)(2)(ii), 40 CFR 261.4(2)(23), (24), or (25)?

If "Yes", you must fill out the Addendum to the Site Identification Form: Notification for Managing Hazardous Secondary Material.

13. Comments

14. Certification. I certify under penalty of law that this document and all attachments were prepared under my direction or supervision in accordance with a system designed to assure that qualified personnel properly gather and evaluate the information submitted. Based on my inquiry of the person or persons who manage the system, or those persons directly responsible for gathering the information, the information submitted is, to the best of my knowledge and belief, true, accurate, and complete. I am aware that there are significant penalties for submitting false information, including the possibility of fines and imprisonment for knowing violations. For the RCRA Hazardous Part A Permit Application, all owner(s) and operator(s) must sign (se 40 CFR 270.10(b) and 270.11).

Signature of legal owner, operator, or an authorized representative	Name and Official Title (type or print)	Date Signed (mm/dd/yyyy)
	K. W. Daniels, ESH&QA Vice President, CH2M-WG Idaho, LLC	5/16/2011
	R. B. Provencher, Manager, Department of Energy Idaho Operations Office	5/28/11

EPA ID NO: ID4890008952 OMB#: 2050-0034; Expires 7/31/2012

United States Environmental Protection Agency

HAZARDOUS WASTE PERMIT INFORMATION FORM

1. Facility Permit Contact	First Name: **DONALD**	MI: **N**	Last Name: **RASCH**
	Contact Title: **Team Lead, Compliance Team, Environmental Technical Support Division**		
	Phone: **(208) 526-1511**	Ext.: **N/A**	Email: **RASCHDN@ID.DOE.GOV**
2. Facility Permit Contact Mailing Address	Street or P.O. Box: **1955 FREMONT AVENUE**		
	City, Town, or Village: **IDAHO FALLS**		
	State: **ID**		
	Country: **USA**		Zip Code: **83145**
3. Operator Mailing Address and Telephone Number	Street or P.O. Box: **P.O. BOX 2010**		
	City, Town, or Village: **IDAHO FALLS**		
	State: **ID**		Phone: **(208) 533-3475**
	Country: **USA**		Zip Code: **83403-2010**
4. Facility Existence Date	Facility Existence Date (mm/dd/yyyy): **06/01/1949**		

5. Other Environmental Permits

A. Facility Type *(Enter code)*	B. Permit Number												C. Description
R	I	D	4	8	9	0	0	0	8	9	5	2	Final HWMA Storage & Treatment Permit for the INTEC on the INL (Volumes 14 and 18)
R	I	D	4	8	9	0	0	0	8	9	5	2	HWMA/RCRA Part B Permit Application for the INL (Volume 3)
R	I	D	4	8	9	0	0	0	8	9	5	2	HWMA/RCRA Part B Post-Closure Permit for the INL - Waste Calcining Facility (Volume 21)
R	I	D	4	8	9	0	0	0	8	9	5	2	HWMA/RCRA Part B Storage Permit for the CSSF at the INTEC on the INL (Volume 22)
R	I	D	4	8	9	0	0	0	8	9	5	2	HWMA/RCRA Part B Storage and Treatment Permit for the EBR-II located at the MFC on the INL (PER-120)
R	I	D	4	8	9	0	0	0	8	9	5	2	HWMA/RCRA Part A Permit Application for the INL (Volume 1)
P, E, U													See Additional Information Supplement to Item 5_-Other Permits List

6. Nature of Business

The Idaho National Laboratory (INL) was established in 1949, as a center where nuclear power reactors and support facilities could be built, tested, and operated. The INL site covers approximately 890 square miles and is 25 miles west of Idaho Falls, ID. For many years the INL was the site of the largest nuclear power research & development effort in the world. During the 1970's the INL's mission broadened to include such areas as biotechnology, energy and materials research, and conservation and renewable energy. At the end of the Cold War, waste treatment and cleanup of previously contaminated sites became a priority. Today the INL is a science-based, applied engineering national laboratory dedicated to completing its waste cleanup mission and meeting the nation's environmental, energy, nuclear science and technology, and national security needs. Additionally, in 2002, it was announced that the INL will serve as the nation's leading nuclear technology center.

Additional Information
Supplement to Item 5.
Other Environmental Permits

AIR PERMITS

(Permit Type P)

Idaho National Laboratory (INL)

- **Title V Operating Permit -** Permit Number T1-030520

Idaho Nuclear Technology and Engineering Center (INTEC)

PTC (Permit Number PTC-023-00001)
- New Waste Calcining Facility/Decontamination Area, CPP-659

PTC (Permit Number P-030505)
- CPP-606 Distillate Oil-Fired Boilers

PTC (Permit Number 060520)
- Integrated Waste Treatment Unit at the INL - Idaho Nuclear Technology and Engineering Center

PTC (Permit Number P-2007.0076)
- INL, INTEC Initial PTC for Standby Compressor (COM-UTI-606)

Critical Infrastructure Test Range Center (CITRC)

PTC (Permit Number P-020521)
- WROC/PBF boiler permitted under the INTEC Site-wide NOx permit - PER-620-023

WATER PERMITS

State of Idaho Monitoring Well Permit (IDWR)

(Permit Type U)

INL monitoring well permit applications are sent annually to the IDWR for wells (greater than 18 feet dee to be constructed in the current calendar year. Permits are authorized by agreement between the DOE-ID and the IDWR.

State of Idaho Wastewater Land Application Permits (WLAP)

(Permit Type E)
- INTEC Service Waste System and Sewage Treatment Plant - Permit Number LA-000130-04

Ground Water Rights

(Permit Type E)

INL operations use water guaranteed by both a Federal Reserved Water Right and a water rights agreement with the State of Idaho.

7. Process Codes and Design Capacities - Enter information in the Sections on Form Page 3.

A. PROCESS CODE - Enter the code from the list of process codes below that best describes each process to be used at the facility. If more lines are needed, attach a separate sheet of paper with the additional information. For "other" processes (i.e., D99, S99, T04 and X99), describe the process (including its design capacity) in the space proveded in Item 8.

B. PROCESS DESIGN CAPACITY - For each code entered in Item 7.A; enter the capacity of the process, enter the capacity of the process.

1. AMOUNT - Enter the amount. In a case where design capacity is not applicable (such as in a closure/post-closure or enforcement action) enter the total amount of waste for that process.

2. UNIT OF MEASURE - For each amount entered in Section 7.B(1), enter the code in Section 7.B(2) from the list of unit of measure codes below that describes the unit of measure used. Select only from the units of measure in this list.

C. PROCESS TOTAL NUMBER OF UNITS - Enter the total number of units for each corresponding process code.

Process Code	Process	Appropriate Unit of Measure for Process Design Capacity
	Disposal	
D79	Underground Injection Well Disposal	Gallons; Liters; Gallons Per Day; or Liters Per Day
D80	Landfill	Acre-feet; Hectare-meter; Acres; Cubic Meters; Hectares; Cubic Yards
D81	Land Treatment	Acres or Hectares
D82	Ocean Disposal	Gallons Per Day or Liters Per Day
D83	Surface Impoundment Disposal	Gallons; Liters; Cubic Meters; or Cubic Yards
D99	Other Disposal	Any Unit of Measure Listed Below
	Storage	
S01	Container	Gallons; Liters; Cubic Meters; or Cubic Yards
S02	Tank Storage	Gallons; Liters; Cubic Meters; or Cubic Yards
S03	Waste Pile	Cubic Yards or Cubic Meters
S04	Surface Impoundment	Gallons; Liters; Cubic Meters; or Cubic Yards
S05	Drip Pad	Gallons; Liters; Acres; Cubic Meters; Hectares; or Cubic Yards
S06	Containment Building Storage	Cubic Yards or Cubic Meters
S99	Other Storage	Any Unit of Measure Listed Below
	Treatment	
T01	Tank Treatment	Gallons Per Day; Liters Per Day; Short Tons Per Hour; Gallons Per Hour; Liters Per Hour; Pounds Per Hour; Short Tons Per Day; Kilograms Per Hour; Metric Tons Per Day; or Metric Tons Per Hour
T02	Surface Impoundment Treatment	Gallons Per Day; Liters Per Day; Short Tons Per Hour; Gallons Per Hour; Liters Per Hour; Pounds Per Hour; Short Tons per Day; Kilograms Per Hour; Metric Tons Per Day; or Metric Tons Per Hour
T03	Incinerator	Short Tons Per Hour; Metric Tons Per Hour; Gallons Per Hour; Liters Per Hour; BTU Per Hour; Pounds Per Hour; Short Tons Per Day; Kilograms Per Hour; Gallons Per Day; Liters Per Day; Metric Tons Per Hour; or Million BTU Per Hour
T04	Other Treatment	Gallons Per Day; Liters Per Day; Pounds Per Hour; Short Tons Per Hour; Kilograms Per Hour; Metric Tons Per Day; Metric Tons Per Hour; Short Tons Per Day; Btu Per Hour; Gallons Per Day; Liters Per Hour; or Million BTU Per Hour
T80	Boiler	Gallons; Liters; Gallons Per Hour; Liters Per Hour; BTU Per Hour; or Million BTU Per Hour

Process Code	PROCESS	APPROPIRATE UNITS OF MEASURE FOR PROCESS DESIGN CAPACITY
	Treatment (continued)	**(for T81 - T94)**
T81	Cement Kiln	Gallons Per Day; Liters Per Day; Pounds Per Hour; Short Tons Per Hour; Kilograms Per Hour; Metric Tons Per Day; Metric Tons Per Hour; Short Tons Per Day; BTU Per Hour; Liters Per Hour; Kilograms Per Hour; or Million BTU Per Hour
T82	Lime Kiln	
T83	Aggregate Kiln	
T84	Phosphate Kiln	
T85	Coke Oven	
T86	Blast Furnace	
T87	Smelting, Melting, or Refining Furnace	
T88	Titanium Dioxide Chloride Oxidation Reactor	
T89	Methane Reforming Furnace	
T90	Pulping Liquor Recovery Furnace	
T91	Combustion Device Used In the Recovery Of Sulfur Values From Spent Sulfuric Acid	
T-2	Halogen Acid Furnaces	
T93	Other Industrial Furnaces Listed In 40 CFR §260.10	
T94	Containment Building - Treatment	Cubic Yards; Cubic Meters; Short Tons Per Hour; Gallons Per Hour; Liters Per Hour; BTU Per Hour; Pounds Per Hour; Short Tons Per Day; Kilograms Per Hour; Metric Tons Per Day; Gallons Per Day; Liters Per Day; Metric Tons Per Hour; or Million BTU Per Hour
	Miscellaneous (Subpart X)	
X01	Open Burning/Open Detonation	Any Unit of Measure in Code Table Below
X02	Mechanical Processing	Short Tons Per Hour; Metric Tons Per Hour;Short Tons Per Day; Metric Tons Per Day; Pounds Per Hour; Kilograms Per Hour; Gallons Per Hour; Liters Per Hour, or Gallons Per Day
X03	Thermal Unit	Gallons Per Day; Liters Per Day; Pounds Per Hour; Short Tons Per Hour; Kilograms Per Hour; Metric tons Per Day; Metric Tons Per Hour; Short Tons Per Day; Btu Per Hour; or Million BTU Per Hour
X04	Geologic Repository	Cubic Yards; Cubic Meters; Acre-feet; Hectare-meter; Gallons; or Liters
X99	Other Subpart X	Any Unit of Measure Listed Below

Unit of Measure	Unit of Measure Code	Unit of Measure	Unit of Measure Code	Unit of Measure	Unit of Measure Code
Gallons	**G**	**Short Tons Per Hour**	**D**	**Cubic Yards**	**Y**
Gallons Per Hour	**E**	**Short Tons Per Day**	**N**	**Cubic Meters**	**C**
Gallons Per Day	**U**	**Metric Tons Per Hour**	**W**	**Acres**	**B**
Liters	**L**	**Metric Tons Per Day**	**S**	**Acre-feet**	**A**
Liters Per Hour	**H**	**Pounds Per Hour**	**J**	**Hectares**	**Q**
Liters Per Day	**V**	**Kilograms Per Hour**	**X**	**Hectare-meter**	**F**
		Million Btu Per Hour	**X**	**Btu Per Hour**	**I**

7. Process Codes and Design Capacities (Continued)

EXAMPLE FOR COMPLETING Item 7 (shown in line number X-1 below): A facility has a storage tank, which can hold 533.788 gallons.

Line Number		A. Process Code (From list above)			B. PROCESS DESIGN CAPACITY (1) Amount (Specify)	(2) Unit of Measure	C. Process Total Number of Units	For Official Use Only
X	1	S	0	2	533.788	G	001	
	1	S	0	1	179,070	G	001	
	2	S	0	2	207,693	G	25	
	3	T	0	1	215,480	U	11	
	4							
	5							
	6							
	7							
	8							
	9							
1	0							
1	1							

NOTE: If you need to list more than 13 process codes, attach an additional sheet(s) with the information in the same format as above. Number the lines sequentially, taking into account any lines that will be used for "other" processes (i.e., D99, S99, T04 and X99) in Item 8.

8. Other Processes (Follow instructions from Item 7 for D99, S99, T04 and X99 process codes)

Line Number (Enter #s in sequence with item 7)		A. Process Code (from list above)			B. PROCESS DESIGN CAPACITY (1) Amount (Specify)	(2) Unit of Measure	C. Process Total Number of Units	For Official Use Only
X	2	T	0	4	100.00	U	001	
	4	X	9	9	1,100	E	001	
	5	X	9	9	1,500	E	002	
	6	X	9	9	210	E	001	

ITEM 7. PROCESS CODES AND DESIGN CAPACITIES SUPPLEMENT

LINE NUMBER	PROCESS TYPE UNIT NAME		PROCESS DESIGN CAPACITY
1	**S01- CONTAINER STORAGE INCLUDES:**		
	Integrated Waste Treatment Unit (IWTU)		
	• Vault Storage Area		175,000 gallons
	• Vault Staging Area		4,070 gallons
		Line 1 Total:	**680 m^3 or 179,070 gallons**
2	**S02 - TANK STORAGE INCLUDES:**		
	CPP-604 Evaporator Feed Sediment Tank:		4,700 gallons
	• VES-WL-132 @ 4,700 gallons		
	CPP-604 Evaporator Feed Collection Tank:		19,000 gallons
	• VES-WL-133 @ 19,000 gallons		
	CPP-604 Surge Tank For VES-WL-133:		18,400 gallons
	• VES-WL-102 @ 18,400 gallons		
	CPP-604 Evaporator Head Tank:		270 gallons
	• VES-WL-109 @ 270 gallons		
	CPP-604 Evaporator Units:		2,000 gallons
	• EVAP-WL-129 @ 1,000 gallons		
	• EVAP-WL-161 @ 1,000 gallons		
	CPP-604 Process Condensate Surge Tanks:		566 gallons
	• VES-WL-134 @ 500 gallons		
	• VES-WL-131 @ 66 gallons		
	CPP-604 Off-gas Condensate Knock Out Tank:		98 gallons
	• VES-WL-108 @ 98 gallons		
	CPP-604 Bottoms Collection Tanks:		19,900 gallons
	• VES-WL-111 @ 1,500 gallons		
	• VES-WL-101 @ 18,400 gallons		
	CPP-604 Tank Farm Tanks:		55,200 gallons
	• VES-WM-100 @ 18,400 gallons		
	• VES-WM-101 @ 18,400 gallons		
	• VES-WM-102 @ 18,400 gallons		

ITEM 7. PROCESS CODES AND DESIGN CAPACITIES SUPPLEMENT

LINE NUMBER	PROCESS TYPE UNIT NAME		PROCESS DESIGN CAPACITY
2	**S02 - TANK STORAGE INCLUDES:**		
(continued)	**CPP-604 Process Waste Liquid (PWL) System Tanks:** • VES-WL-135 @ 10 gallons • VES-WL-136 @ 10 gallons • VES-WL-137 @ 25 gallons • VES-WL-138 @ 25 gallons • VES-WL-139 @ 10 gallons • VES-WL-142 @ 10 gallons • VES-WL-144 @ 25 gallons • VES-WL-150 @ 50 gallons		165 gallons
	CPP-604 Process Condensate Collection Tanks: • VES-WL-106 @ 5,000 gallons • VES-WL-107 @ 5,000 gallons • VES-WL-163 @ 5,000 gallons		15,000 gallons
	Acid Fractionator Waste Feed Head Tank: • VES-WLK-197 @ 270 gallons		270 gallons
	Acid Fractionator: • VES-WLL-170 @ 460 gallons • VES-WLK-171 @ 460 gallons		920 gallons
	Acid Fractionator Bottoms Tank: • VES-WLL-195 @ 270 gallons		270 gallons
	LET&D Nitric Acid Recycle Tank System: • VES-NCR-171 @ 22,500 gallons • VES-NCR-173 @ 90 gallons		22,590 gallons
	CPP-659 Blend/Hold Tanks: • VES-NCC-101 @ 5,870 gallons • VES-NCC-102 @ 4,000 gallons • VES-NCC-103 @ 4,000 gallons		13,870 gallons
	CPP-659 Fluoride Hot Sump Tank: • VES-NCC-119 @ 6,500 gallons		6,500 gallons
	CPP-659 Non-Fluoride Hot Sump Tank: • VES-NCC-122 @ 4,300 gallons		4,300 gallons
	CPP-659 Evaporator Unit: • EVAP-NCC-150 (includes VES-NCC-150, HE-NCC-350, HE-NCC-351) @ 2,600 gallons		2,600 gallons

ITEM 7. PROCESS CODES AND DESIGN CAPACITIES SUPPLEMENT

LINE NUMBER	PROCESS TYPE UNIT NAME		PROCESS DESIGN CAPACITY
2	**S02 - TANK STORAGE INCLUDES:**		
(continued)	**CPP-659 Process Off-gas Condensate System:**		2,560 gallons
	• VES-NCC-108 @ 2,000 gallons		
	• VES-NCC-116 @ 500 gallons		
	• VES-NCC-136 @ 60 gallons		
	CPP-659 Constant Head Feed Tank:		200 gallons
	• VES-NCC-152 @ 200 gallons		
	CPP-1696 Waste Feed Tank:		2,170 gallons
	• VES-SRC-131 @ 2,170 gallons		
	CPP-1696 Product Receiver/Cooler Tanks:		1,024 gallons
	• VES-SRC-190 @ 512 gallons		
	• VES-SRC-191 @ 512 gallons		
	CPP-1696 Firewater Collection Tank:		15,000 gallons
	• TK-SRE-196 @15,000 gallons		
	CPP-1696 Offgas Condensate Collection Tank:		
	• TK-SRH-141 @ 120gallons		120 gallons
		Line 2 Total:	**207,693 gallons**
3	**T01 - TANK TREATMENT INCLUDES:**		
	CPP-604 Evaporator Feed Sediment Tank:		28,000 gallons/day
	• VES-WL-132 @ 28,000 gallons/day		
	CPP-604 Evaporator Feed Collection Tank:		28,000 gallons/day
	• VES-WL-133 @ 28,000 gallons/day		
	CPP-604 Surge Tank for VES-WL-133:		18,400 gallons/day
	• VES-WL-102 @ 18,400 gallons/day		
	CPP-604 Bottoms Collection Tanks:		19,000 gallons/day
	• VES-WL-111 @ 3,000 gallons/day		
	• VES-WL-101 @ 16,000 gallons/day		
	CPP-604 Tank Farm Tanks:		55,200 gallons/day
	• VES-WM-100 @ 18,400 gallons/day		
	• VES-WM-101 @ 18,400 gallons/day		
	• VES-WM-102 @ 18,400 gallons/day		

ITEM 7. PROCESS CODES AND DESIGN CAPACITIES SUPPLEMENT

LINE NUMBER	PROCESS TYPE UNIT NAME		PROCESS DESIGN CAPACITY
3	**T01 - TANK TREATMENT INCLUDES:**		
(continued)	**CPP-604 Process Condensate Collection Tanks:** • VES-WL-106 @ 5,000 gallons/day • VES-WL-107 @ 5,000 gallons/day • VES-WL-163 @ 5,000 gallons/day		15,000 gallons/day
	CPP-659 Blend/Hold Tanks: • VES-NCC-101 @ 11,740 gallons/day • VES-NCC-102 @ 8,000 gallons/day • VES-NCC-103 @ 8,000 gallons/day		27,740 gallons/day
	CPP-659 Fluoride Hot Sump Tank: • VES-NCC-119 @ 6,500 gallons/day		6,500 gallons/day
	CPP-659 Non-Fluoride Hot Sump Tank: • VES-NCC-122 @ 8,600 gallons/day		8,600 gallons/day
	CPP-659 Process Off-gas Condensate System: • VES-NCC-108 @ 4,000 gallons/day		4,000 gallons/day
	IWTU Waste Feed Tank: • VES-SRC-131 @ 5,040 gallons/day		5,040 gallons/day
		Line 3 Total:	**215,480 gallons/day**

ITEM 8. ADDITIONAL TREATMENT PROCESSES SUPPLEMENT

LINE NUMBER	PROCESS TYPE UNIT NAME		PROCESS DESIGN CAPACITY
4	**X99 - OTHER SUBPART X TREATMENT - FRACTIONATION INCLUDES:** **CPP-1618 LET&D Fractionators:** • FRAC-WLL-170 @ 550 gallons/hour • FRAC-WLK-171 @ 550 gallons/hour		1,100 gallons/hour
		Line 4 Total:	**1,100 gallons/hour**
5	**X99 - OTHER SUBPART X TREATMENT - EVAPORATION INCLUDES:** **CPP-604 PEW Evaporators:** • EVAP-WL-129 @ 500 gallons/hour • EVAP-WL-161 @ 500 gallons/hour **CPP-659 Evaporator Unit:** • VES-NCC-150 (included VES-NCC-150, HE-NCC-350, HE-NCC-351) @ 500 gallons/hour		1,000 gallons/hour 500 gallons/hour
		Line 5 Total:	**1,500 gallons/hour**
6	**X99 - OTHER SUBPART X TREATMENT - STEAM REFORMING INCLUDES:** • **CPP-1696 Steam Reforming System** (includes VES-SRC-140 Denitration/Mineralization Reformer and VES-SRC-160 Carbon Reduction Reformer) @ 210 gallons/hour		
		Line 6 Total:	**210 gallons/hour**

9. Description of Hazardous Wastes - Enter information in the Sections on Form Page 5.

A. EPA HAZARDOUS WASTE NUMBER - Enter the four-digit number from 40 CFR, Part 261 Subpart D of each listed hazardous waste you will handle. For hazardous wastes which are not listed in 40 CFR, Part 261 Subpart D, enter the four-digit number(s) from 40 CFR Part 261, Subpart C that describes the characteristics and/or the toxic contaminants of those hazardous wastes.

B. ESTIMATED ANNUAL QUANTITY - For each listed waste entered in Item 9.A, estimate the quantity of that waste that will be handled on an annual basis. For each characteristic or toxic contaminant entered in Item 9.A, estimate the total annual quantity of all the non-listed waste(s) that will be handled which possess that characteristic or contaminant.

C. UNIT OF MEASURE - For each quantity entered in Item 9.B, enter the unit of measure code. Units of measure which must be used and the appropriate codes are:

ENGLISH UNIT OF MEASURE	CODE	METRIC UNIT OF MEASURE	CODE
POUNDS	P	KILOGRAMS	K
TONS	T	METRIC TONS	M

If facility records use any other unit of measure for quantity, the units of measure must be converted into one of the required units of measure, taking into account the appropriate density or specific gravity of the waste.

D. PROCESSES

1. PROCESS CODES:

For listed hazardous waste: For each listed hazardous waste entered in Item 9.A, select the code(s) from the list of process codes contained in Items 7.A and 8.A on page 3 to indicate all the processes that will be used to store, treat, and/or dispose of all the listed hazardous wastes.

For non-listed hazardous waste: For each characteristic or toxic contaminant entered in Item 9.A, select the code(s) from the list of process codes contained in Items 7.A and 8.A on page 3 to indicate all the processes that will be used to store, treat, and/or dispose of all the non-listed hazardous wastes that possess that characteristic or toxic contaminant.

NOTE: THREE SPACES ARE PROVIDED FOR ENTERING PROCESS CODES. IF MORE ARE NEEDED:

1. Enter the first two as described above.
2. Enter "000" in the extreme right box of Item 9.D(1).
3. Use additional sheet, enter line number from previous sheet, and enter additional code(s) in Item 9.E.

2. PROCESS DESCRIPTION: If a code is not listed for a process that will be used, describe the process in Item 9.D(2) or in Item 9.E(2).

NOTE: HAZARDOUS WASTES DESCRIBED BY MORE THAN ONE EPA HAZARDOUS WASTE NUMBER - Hazardous wastes that can be described by more than one EPA Hazardous Waste Number shall be described on the form as follows:

1. Select one of the EPA Hazardous Waste Numbers and enter it in Item 9.A. On the same line complete Items 9.B, 9.C, and 9.D by estimating the total annual quantity of the waste and describing all the processes to be used to store, treat, and/or dispose of the waste.

2. In Item 9.A of the next line enter the other EPA Hazardous Waste Number that can be used to describe the waste. In Item 9.D.2 on that line enter "included with above" and make no other entries on that line.

3. Repeat step 2 for each EPA Hazardous Waste Number that can be used to describe the hazardous waste.

EXAMPLE FOR COMPLETING Item 9 (shown in line numbers X-1, X-2, X-3, and X-4 below) - A facility will treat and dispose of an estimated 900 pounds per year of chrome shavings from leather tanning and finishing operations. In addition, the facility will treat and dispose of three non-listed wastes. Two wastes are corrosive only and there will be an estimated 200 pounds per year of each waste. The other waste is corrosive and ignitable and there will be an estimated 100 pounds per year of that waste. Treatment will be in an incinerator and disposal will be in a landfill.

Line Number		A. EPA Hazardous Waste No. (Enter code)				B. Estimated Annual Qty of Waste	C. Unit of Measure (Enter code)	D. PROCESSES									
								(1) PROCESS CODES (Enter code)									(2) PROCESS DESCRIPTION (If code is not entered in 9.D(1))
X	1	K	0	5	4	900	P	T	0	3	D	8	0				
X	2	D	0	0	2	400	P	T	0	3	D	8	0				
X	3	D	0	0	1	100	P	T	0	3	D	8	0				
X	4	D	0	0	2												Included With Above

ITEM 9. DESCRIPTION OF HAZARDOUS WASTE
TABLE OF CONTENTS

Unit Name	Page Number
CPP-604 Evaporator Feed Sediment Tank	Page 5A of 6
CPP-604 Evaporator Feed Collection Tank	Page 5B of 6
CPP-604 Surge Tank for VES-WL-133	Page 5C of 6
CPP-604 Evaporator Head Tank	Page 5D of 6
CPP-604 Evaporator Units	Page 5E of 6
CPP-604 Process Condensate Surge Tanks	Page 5F of 6
CPP-604 Proccess Off-gas Condensate Knock Out Tank	Page 5G of 6
CPP-604 Bottoms Collection Tanks	Page 5H of 6
CPP-604 Tank Farm Tanks	Page 5I of 6
CPP-604 Process Waste Liquid System Tanks	Page 5J of 6
CPP-604 Process Condensate Collection Tanks	Page 5K of 6
CPP-1618 Acid Fractionator Waste Feed Head Tank	Page 5L of 6
CPP-1618 Acid Fractionators	Page 5M of 6
CPP-1618 Acid Fractionator Bottoms Tank	Page 5N of 6
CPP-1618 LET&D Nitric Acid Recycle Tank	Page 5O of 6
CPP-659 Blend/Hold Tanks (VES-NCC-101, VES-NCC-102, and VES-NCC-103)	Page 5P of 6
CPP-659 Fluoride Hot Sump Tank (VES-NCC-119)	Page 5Q of 6
CPP-659 Non-Fluoride Hot Sump Tank (VES-NCC-122)	Page 5R of 6
CPP-659 Evaporator Unit (EVAP-NCC-150)	Page 5S of 6
CPP-659 Process Off-gas Condensate Tank (VES-NCC-108)	Page 5T of 6
CPP-659 Process Off-gas Condensate Tanks (VES-NCC-116 & VES-NCC-136)	Page 5U of 6
CPP-659 Constant Head Feed Tank (VES-NCC-152)	Page 5V of 6
CPP-1696 Integrated Waste Treatment Unit (IWTU)	Page 5W of 6

9. Description of Hazardous Wastes ***(Continued. Use the additional sheet(s) as necessary; number pages as 5a, etc.)***

Line Number		A. EPA Hazardous Waste No. (Enter code)				B. Estimated Annual Qty of Waste	C. Unit of Measure (Enter code)	D. PROCESSES									
								(1) PROCESS CODES (Enter code)									(2) PROCESS DESCRIPTION (If a code is not entered in 9.D(1))
	1	D	0	0	1	13,600	T	S	0	2	T	0	1				CPP-604 Evaporator Feed Sediment Tank (VES-WL-132)
	2	D	0	0	2												INCLUDED WITH ABOVE
	3	D	0	0	4												INCLUDED WITH ABOVE
	4	D	0	0	5												INCLUDED WITH ABOVE
	5	D	0	0	6												INCLUDED WITH ABOVE
	6	D	0	0	7												INCLUDED WITH ABOVE
	7	D	0	0	8												INCLUDED WITH ABOVE
	8	D	0	0	9												INCLUDED WITH ABOVE
	9	D	0	1	0												INCLUDED WITH ABOVE
1	0	D	0	1	1												INCLUDED WITH ABOVE
1	1	D	0	1	8												INCLUDED WITH ABOVE
1	2	D	0	1	9												INCLUDED WITH ABOVE
1	3	D	0	2	1												INCLUDED WITH ABOVE
1	4	D	0	2	2												INCLUDED WITH ABOVE
1	5	D	0	2	6												INCLUDED WITH ABOVE
1	6	D	0	2	8												INCLUDED WITH ABOVE
1	7	D	0	3	2												INCLUDED WITH ABOVE
1	8	D	0	3	4												INCLUDED WITH ABOVE
1	9	D	0	3	5												INCLUDED WITH ABOVE
2	0	D	0	3	6												INCLUDED WITH ABOVE
2	1	D	0	3	8												INCLUDED WITH ABOVE
2	2	D	0	3	9												INCLUDED WITH ABOVE
2	3	D	0	4	0												INCLUDED WITH ABOVE
2	4	F	0	0	1												INCLUDED WITH ABOVE
2	5	F	0	0	2												INCLUDED WITH ABOVE
2	6	F	0	0	3												INCLUDED WITH ABOVE
2	7	F	0	0	5												INCLUDED WITH ABOVE
2	8	U	1	3	4												INCLUDED WITH ABOVE
2	9																
3	0																
3	1																
3	2																
3	3																
3	4																
3	5																
3	6																

9. Description of Hazardous Wastes ***(Continued. Use the additional sheet(s) as necessary; number pages as 5a, etc.)***

Line Number		A. EPA Hazardous Waste No. (Enter code)				B. Estimated Annual Qty of Waste	C. Unit of Measure (Enter code)	D. PROCESSES									
								(1) PROCESS CODES (Enter code)									(2) PROCESS DESCRIPTION (If a code is not entered in 9.D(1))
	1	D	0	0	1	13,600	T	S	0	2	T	0	1				CPP-604 Evaporator Feed Collection Tank (VES-WL-133)
	2	D	0	0	2												INCLUDED WITH ABOVE
	3	D	0	0	4												INCLUDED WITH ABOVE
	4	D	0	0	5												INCLUDED WITH ABOVE
	5	D	0	0	6												INCLUDED WITH ABOVE
	6	D	0	0	7												INCLUDED WITH ABOVE
	7	D	0	0	8												INCLUDED WITH ABOVE
	8	D	0	0	9												INCLUDED WITH ABOVE
	9	D	0	1	0												INCLUDED WITH ABOVE
1	0	D	0	1	1												INCLUDED WITH ABOVE
1	1	D	0	1	8												INCLUDED WITH ABOVE
1	2	D	0	1	9												INCLUDED WITH ABOVE
1	3	D	0	2	1												INCLUDED WITH ABOVE
1	4	D	0	2	2												INCLUDED WITH ABOVE
1	5	D	0	2	6												INCLUDED WITH ABOVE
1	6	D	0	2	8												INCLUDED WITH ABOVE
1	7	D	0	3	2												INCLUDED WITH ABOVE
1	8	D	0	3	4												INCLUDED WITH ABOVE
1	9	D	0	3	5												INCLUDED WITH ABOVE
2	0	D	0	3	6												INCLUDED WITH ABOVE
2	1	D	0	3	8												INCLUDED WITH ABOVE
2	2	D	0	3	9												INCLUDED WITH ABOVE
2	3	D	0	4	0												INCLUDED WITH ABOVE
2	4	F	0	0	1												INCLUDED WITH ABOVE
2	5	F	0	0	2												INCLUDED WITH ABOVE
2	6	F	0	0	3												INCLUDED WITH ABOVE
2	7	F	0	0	5												INCLUDED WITH ABOVE
2	8	U	1	3	4												INCLUDED WITH ABOVE
2	9																
3	0																
3	1																
3	2																
3	3																
3	4																
3	5																
3	6																

9. Description of Hazardous Wastes ***(Continued. Use the additional sheet(s) as necessary; number pages as 5a, etc.)***

Line Number		A. EPA Hazardous Waste No. (Enter code)				B. Estimated Annual Qty of Waste	C. Unit of Measure (Enter code)	D. PROCESSES									
								(1) PROCESS CODES (Enter code)									(2) PROCESS DESCRIPTION (If a code is not entered in 9.D(1))
	1	D	0	0	1	16,600	T	S	0	2	T	0	1				CPP-604 Surge Tank for VES-WL-133 (VES-WL-102)
	2	D	0	0	2												INCLUDED WITH ABOVE
	3	D	0	0	4												INCLUDED WITH ABOVE
	4	D	0	0	5												INCLUDED WITH ABOVE
	5	D	0	0	6												INCLUDED WITH ABOVE
	6	D	0	0	7												INCLUDED WITH ABOVE
	7	D	0	0	8												INCLUDED WITH ABOVE
	8	D	0	0	9												INCLUDED WITH ABOVE
	9	D	0	1	0												INCLUDED WITH ABOVE
1	0	D	0	1	1												INCLUDED WITH ABOVE
1	1	D	0	1	8												INCLUDED WITH ABOVE
1	2	D	0	1	9												INCLUDED WITH ABOVE
1	3	D	0	2	1												INCLUDED WITH ABOVE
1	4	D	0	2	2												INCLUDED WITH ABOVE
1	5	D	0	2	6												INCLUDED WITH ABOVE
1	6	D	0	2	8												INCLUDED WITH ABOVE
1	7	D	0	3	2												INCLUDED WITH ABOVE
1	8	D	0	3	4												INCLUDED WITH ABOVE
1	9	D	0	3	5												INCLUDED WITH ABOVE
2	0	D	0	3	6												INCLUDED WITH ABOVE
2	1	D	0	3	8												INCLUDED WITH ABOVE
2	2	D	0	3	9												INCLUDED WITH ABOVE
2	3	D	0	4	0												INCLUDED WITH ABOVE
2	4	F	0	0	1												INCLUDED WITH ABOVE
2	5	F	0	0	2												INCLUDED WITH ABOVE
2	6	F	0	0	3												INCLUDED WITH ABOVE
2	7	F	0	0	5												INCLUDED WITH ABOVE
2	8	U	1	3	4												INCLUDED WITH ABOVE
2	9																
3	0																
3	1																
3	2																
3	3																
3	4																
3	5																
3	6																

9. Description of Hazardous Wastes ***(Continued. Use the additional sheet(s) as necessary; number pages as 5a, etc.)***

Line Number		A. EPA Hazardous Waste No. (Enter code)				B. Estimated Annual Qty of Waste	C. Unit of Measure (Enter code)	D. PROCESSES									
								(1) PROCESS CODES (Enter code)									(2) PROCESS DESCRIPTION (If a code is not entered in 9.D(1))
	1	D	0	0	1	13,600	T	S	0	2							CPP-604 Evaporator Head Tank (VES-WL-109)
	2	D	0	0	2												INCLUDED WITH ABOVE
	3	D	0	0	4												INCLUDED WITH ABOVE
	4	D	0	0	5												INCLUDED WITH ABOVE
	5	D	0	0	6												INCLUDED WITH ABOVE
	6	D	0	0	7												INCLUDED WITH ABOVE
	7	D	0	0	8												INCLUDED WITH ABOVE
	8	D	0	0	9												INCLUDED WITH ABOVE
	9	D	0	1	0												INCLUDED WITH ABOVE
1	0	D	0	1	1												INCLUDED WITH ABOVE
1	1	D	0	1	8												INCLUDED WITH ABOVE
1	2	D	0	1	9												INCLUDED WITH ABOVE
1	3	D	0	2	1												INCLUDED WITH ABOVE
1	4	D	0	2	2												INCLUDED WITH ABOVE
1	5	D	0	2	6												INCLUDED WITH ABOVE
1	6	D	0	2	8												INCLUDED WITH ABOVE
1	7	D	0	3	2												INCLUDED WITH ABOVE
1	8	D	0	3	4												INCLUDED WITH ABOVE
1	9	D	0	3	5												INCLUDED WITH ABOVE
2	0	D	0	3	6												INCLUDED WITH ABOVE
2	1	D	0	3	8												INCLUDED WITH ABOVE
2	2	D	0	3	9												INCLUDED WITH ABOVE
2	3	D	0	4	0												INCLUDED WITH ABOVE
2	4	F	0	0	1												INCLUDED WITH ABOVE
2	5	F	0	0	2												INCLUDED WITH ABOVE
2	6	F	0	0	3												INCLUDED WITH ABOVE
2	7	F	0	0	5												INCLUDED WITH ABOVE
2	8	U	1	3	4												INCLUDED WITH ABOVE
2	9																
3	0																
3	1																
3	2																
3	3																
3	4																
3	5																
3	6																

9. Description of Hazardous Wastes ***(Continued. Use the additional sheet(s) as necessary; number pages as 5a, etc.)***

Line Number		A. EPA Hazardous Waste No. (Enter code)				B. Estimated Annual Qty of Waste	C. Unit of Measure (Enter code)	D. PROCESSES									
								(1) PROCESS CODES (Enter code)									(2) PROCESS DESCRIPTION (If a code is not entered in 9.D(1))
	1	D	0	0	1	13,600	T	S	0	2	X	9	9				CPP-604 PEW Evaporators (EVAP-WL-129, EVAP-WL-161)
	2	D	0	0	2												INCLUDED WITH ABOVE
	3	D	0	0	4												INCLUDED WITH ABOVE
	4	D	0	0	5												INCLUDED WITH ABOVE
	5	D	0	0	6												INCLUDED WITH ABOVE
	6	D	0	0	7												INCLUDED WITH ABOVE
	7	D	0	0	8												INCLUDED WITH ABOVE
	8	D	0	0	9												INCLUDED WITH ABOVE
	9	D	0	1	0												INCLUDED WITH ABOVE
1	0	D	0	1	1												INCLUDED WITH ABOVE
1	1	D	0	1	8												INCLUDED WITH ABOVE
1	2	D	0	1	9												INCLUDED WITH ABOVE
1	3	D	0	2	1												INCLUDED WITH ABOVE
1	4	D	0	2	2												INCLUDED WITH ABOVE
1	5	D	0	2	6												INCLUDED WITH ABOVE
1	6	D	0	2	8												INCLUDED WITH ABOVE
1	7	D	0	3	2												INCLUDED WITH ABOVE
1	8	D	0	3	4												INCLUDED WITH ABOVE
1	9	D	0	3	5												INCLUDED WITH ABOVE
2	0	D	0	3	6												INCLUDED WITH ABOVE
2	1	D	0	3	8												INCLUDED WITH ABOVE
2	2	D	0	3	9												INCLUDED WITH ABOVE
2	3	D	0	4	0												INCLUDED WITH ABOVE
2	4	F	0	0	1												INCLUDED WITH ABOVE
2	5	F	0	0	2												INCLUDED WITH ABOVE
2	6	F	0	0	3												INCLUDED WITH ABOVE
2	7	F	0	0	5												INCLUDED WITH ABOVE
2	8	U	1	3	4												INCLUDED WITH ABOVE
2	9																
3	0																
3	1																
3	2																
3	3																
3	4																
3	5																
3	6																

9. Description of Hazardous Wastes ***(Continued. Use the additional sheet(s) as necessary; number pages as 5a, etc.)***

Line Number		A. EPA Hazardous Waste No. (Enter code)				B. Estimated Annual Qty of Waste	C. Unit of Measure (Enter code)	D. PROCESSES									
								(1) PROCESS CODES (Enter code)									(2) PROCESS DESCRIPTION (If a code is not entered in 9.D(1))
	1	D	0	0	1	13,600	T	S	0	2							CPP-604 Process Condensate Surge Tanks (VES-WL-134, VES-WL-131)
	2	D	0	0	2												INCLUDED WITH ABOVE
	3	D	0	0	4												INCLUDED WITH ABOVE
	4	D	0	0	5												INCLUDED WITH ABOVE
	5	D	0	0	6												INCLUDED WITH ABOVE
	6	D	0	0	7												INCLUDED WITH ABOVE
	7	D	0	0	8												INCLUDED WITH ABOVE
	8	D	0	0	9												INCLUDED WITH ABOVE
	9	D	0	1	0												INCLUDED WITH ABOVE
1	0	D	0	1	1												INCLUDED WITH ABOVE
1	1	D	0	1	8												INCLUDED WITH ABOVE
1	2	D	0	1	9												INCLUDED WITH ABOVE
1	3	D	0	2	1												INCLUDED WITH ABOVE
1	4	D	0	2	2												INCLUDED WITH ABOVE
1	5	D	0	2	6												INCLUDED WITH ABOVE
1	6	D	0	2	8												INCLUDED WITH ABOVE
1	7	D	0	3	2												INCLUDED WITH ABOVE
1	8	D	0	3	4												INCLUDED WITH ABOVE
1	9	D	0	3	5												INCLUDED WITH ABOVE
2	0	D	0	3	6												INCLUDED WITH ABOVE
2	1	D	0	3	8												INCLUDED WITH ABOVE
2	2	D	0	3	9												INCLUDED WITH ABOVE
2	3	D	0	4	0												INCLUDED WITH ABOVE
2	4	F	0	0	1												INCLUDED WITH ABOVE
2	5	F	0	0	2												INCLUDED WITH ABOVE
2	6	F	0	0	3												INCLUDED WITH ABOVE
2	7	F	0	0	5												INCLUDED WITH ABOVE
2	8	U	1	3	4												INCLUDED WITH ABOVE
2	9																
3	0																
3	1																
3	2																
3	3																
3	4																
3	5																
3	6																

9. Description of Hazardous Wastes ***(Continued. Use the additional sheet(s) as necessary; number pages as 5a, etc.)***

Line Number		A. EPA Hazardous Waste No. (Enter code)				B. Estimated Annual Qty of Waste	C. Unit of Measure (Enter code)	D. PROCESSES									
								(1) PROCESS CODES (Enter code)									(2) PROCESS DESCRIPTION (If a code is not entered in 9.D(1))
	1	D	0	0	1	13,500	T	S	0	2							CPP-604 Process Off-gas Condensate Knock Out Tank (VES-WL-108)
	2	D	0	0	2												INCLUDED WITH ABOVE
	3	D	0	0	4												INCLUDED WITH ABOVE
	4	D	0	0	5												INCLUDED WITH ABOVE
	5	D	0	0	6												INCLUDED WITH ABOVE
	6	D	0	0	7												INCLUDED WITH ABOVE
	7	D	0	0	8												INCLUDED WITH ABOVE
	8	D	0	0	9												INCLUDED WITH ABOVE
	9	D	0	1	0												INCLUDED WITH ABOVE
1	0	D	0	1	1												INCLUDED WITH ABOVE
1	1	D	0	1	8												INCLUDED WITH ABOVE
1	2	D	0	1	9												INCLUDED WITH ABOVE
1	3	D	0	2	1												INCLUDED WITH ABOVE
1	4	D	0	2	2												INCLUDED WITH ABOVE
1	5	D	0	2	6												INCLUDED WITH ABOVE
1	6	D	0	2	8												INCLUDED WITH ABOVE
1	7	D	0	3	2												INCLUDED WITH ABOVE
1	8	D	0	3	4												INCLUDED WITH ABOVE
1	9	D	0	3	5												INCLUDED WITH ABOVE
2	0	D	0	3	6												INCLUDED WITH ABOVE
2	1	D	0	3	8												INCLUDED WITH ABOVE
2	2	D	0	3	9												INCLUDED WITH ABOVE
2	3	D	0	4	0												INCLUDED WITH ABOVE
2	4	F	0	0	1												INCLUDED WITH ABOVE
2	5	F	0	0	2												INCLUDED WITH ABOVE
2	6	F	0	0	3												INCLUDED WITH ABOVE
2	7	F	0	0	5												INCLUDED WITH ABOVE
2	8	U	1	3	4												INCLUDED WITH ABOVE
2	9																
3	0																
3	1																
3	2																
3	3																
3	4																
3	5																
3	6																

9. Description of Hazardous Wastes ***(Continued. Use the additional sheet(s) as necessary; number pages as 5a, etc.)***

Line Number		A. EPA Hazardous Waste No. (Enter code)				B. Estimated Annual Qty of Waste	C. Unit of Measure (Enter code)	D. PROCESSES									
								(1) PROCESS CODES (Enter code)									(2) PROCESS DESCRIPTION (If a code is not entered in 9.D(1))
	1	D	0	0	1	270	T	S	0	2	T	0	1				CPP-604 Bottoms Collection Tanks (VES-WL-111, VES-WL-101)
	2	D	0	0	2												INCLUDED WITH ABOVE
	3	D	0	0	4												INCLUDED WITH ABOVE
	4	D	0	0	5												INCLUDED WITH ABOVE
	5	D	0	0	6												INCLUDED WITH ABOVE
	6	D	0	0	7												INCLUDED WITH ABOVE
	7	D	0	0	8												INCLUDED WITH ABOVE
	8	D	0	0	9												INCLUDED WITH ABOVE
	9	D	0	1	0												INCLUDED WITH ABOVE
1	0	D	0	1	1												INCLUDED WITH ABOVE
1	1	D	0	1	8												INCLUDED WITH ABOVE
1	2	D	0	1	9												INCLUDED WITH ABOVE
1	3	D	0	2	1												INCLUDED WITH ABOVE
1	4	D	0	2	2												INCLUDED WITH ABOVE
1	5	D	0	2	6												INCLUDED WITH ABOVE
1	6	D	0	2	8												INCLUDED WITH ABOVE
1	7	D	0	3	2												INCLUDED WITH ABOVE
1	8	D	0	3	4												INCLUDED WITH ABOVE
1	9	D	0	3	5												INCLUDED WITH ABOVE
2	0	D	0	3	6												INCLUDED WITH ABOVE
2	1	D	0	3	8												INCLUDED WITH ABOVE
2	2	D	0	3	9												INCLUDED WITH ABOVE
2	3	D	0	4	0												INCLUDED WITH ABOVE
2	4	F	0	0	1												INCLUDED WITH ABOVE
2	5	F	0	0	2												INCLUDED WITH ABOVE
2	6	F	0	0	3												INCLUDED WITH ABOVE
2	7	F	0	0	5												INCLUDED WITH ABOVE
2	8	U	1	3	4												INCLUDED WITH ABOVE
2	9																
3	0																
3	1																
3	2																
3	3																
3	4																
3	5																
3	6																

9. Description of Hazardous Wastes ***(Continued. Use the additional sheet(s) as necessary; number pages as 5a, etc.)***

Line Number		A. EPA Hazardous Waste No. (Enter code)				B. Estimated Annual Qty of Waste	C. Unit of Measure (Enter code)	D. PROCESSES									
								(1) PROCESS CODES (Enter code)									(2) PROCESS DESCRIPTION (If a code is not entered in 9.D(1))
	1	D	0	0	1	13,600	T	S	0	2	T	0	1				CPP-604 Tank Farm Tanks (VES-WM-100, VES-WM-101, VES-WM-102)
	2	D	0	0	2												INCLUDED WITH ABOVE
	3	D	0	0	4												INCLUDED WITH ABOVE
	4	D	0	0	5												INCLUDED WITH ABOVE
	5	D	0	0	6												INCLUDED WITH ABOVE
	6	D	0	0	7												INCLUDED WITH ABOVE
	7	D	0	0	8												INCLUDED WITH ABOVE
	8	D	0	0	9												INCLUDED WITH ABOVE
	9	D	0	1	0												INCLUDED WITH ABOVE
1	0	D	0	1	1												INCLUDED WITH ABOVE
1	1	D	0	1	8												INCLUDED WITH ABOVE
1	2	D	0	1	9												INCLUDED WITH ABOVE
1	3	D	0	2	1												INCLUDED WITH ABOVE
1	4	D	0	2	2												INCLUDED WITH ABOVE
1	5	D	0	2	6												INCLUDED WITH ABOVE
1	6	D	0	2	8												INCLUDED WITH ABOVE
1	7	D	0	3	2												INCLUDED WITH ABOVE
1	8	D	0	3	4												INCLUDED WITH ABOVE
1	9	D	0	3	5												INCLUDED WITH ABOVE
2	0	D	0	3	6												INCLUDED WITH ABOVE
2	1	D	0	3	8												INCLUDED WITH ABOVE
2	2	D	0	3	9												INCLUDED WITH ABOVE
2	3	D	0	4	0												INCLUDED WITH ABOVE
2	4	F	0	0	1												INCLUDED WITH ABOVE
2	5	F	0	0	2												INCLUDED WITH ABOVE
2	6	F	0	0	3												INCLUDED WITH ABOVE
2	7	F	0	0	5												INCLUDED WITH ABOVE
2	8	U	1	3	4												INCLUDED WITH ABOVE
2	9																
3	0																
3	1																
3	2																
3	3																
3	4																
3	5																
3	6																

9. Description of Hazardous Wastes ***(Continued. Use the additional sheet(s) as necessary; number pages as 5a, etc.)***

Line Number		A. EPA Hazardous Waste No. (Enter code)				B. Estimated Annual Qty of Waste	C. Unit of Measure (Enter code)	D. PROCESSES									
								(1) PROCESS CODES (Enter code)									(2) PROCESS DESCRIPTION (If a code is not entered in 9.D(1))
	1	D	0	0	1	8	T	S	0	2							CPP-604 Process Waste Liquid System Tanks (VES-WL-135, VES-WL-136, VES-WL-137, VES-WL-138, VES-WL-139, VES-WL-142, VES-WL-144, VES-WL-150)
	2	D	0	0	2												INCLUDED WITH ABOVE
	3	D	0	0	4												INCLUDED WITH ABOVE
	4	D	0	0	5												INCLUDED WITH ABOVE
	5	D	0	0	6												INCLUDED WITH ABOVE
	6	D	0	0	7												INCLUDED WITH ABOVE
	7	D	0	0	8												INCLUDED WITH ABOVE
	8	D	0	0	9												INCLUDED WITH ABOVE
	9	D	0	1	0												INCLUDED WITH ABOVE
1	0	D	0	1	1												INCLUDED WITH ABOVE
1	1	D	0	1	8												INCLUDED WITH ABOVE
1	2	D	0	1	9												INCLUDED WITH ABOVE
1	3	D	0	2	1												INCLUDED WITH ABOVE
1	4	D	0	2	2												INCLUDED WITH ABOVE
1	5	D	0	2	6												INCLUDED WITH ABOVE
1	6	D	0	2	8												INCLUDED WITH ABOVE
1	7	D	0	3	2												INCLUDED WITH ABOVE
1	8	D	0	3	4												INCLUDED WITH ABOVE
1	9	D	0	3	5												INCLUDED WITH ABOVE
2	0	D	0	3	6												INCLUDED WITH ABOVE
2	1	D	0	3	8												INCLUDED WITH ABOVE
2	2	D	0	3	9												INCLUDED WITH ABOVE
2	3	D	0	4	0												INCLUDED WITH ABOVE
2	4	F	0	0	1												INCLUDED WITH ABOVE
2	5	F	0	0	2												INCLUDED WITH ABOVE
2	6	F	0	0	3												INCLUDED WITH ABOVE
2	7	F	0	0	5												INCLUDED WITH ABOVE
2	8	U	1	3	4												INCLUDED WITH ABOVE
2	9																
3	0																
3	1																
3	2																
3	3																
3	4																
3	5																
3	6																

9. Description of Hazardous Wastes ***(Continued. Use the additional sheet(s) as necessary; number pages as 5a, etc.)***

Line Number		A. EPA Hazardous Waste No. (Enter code)				B. Estimated Annual Qty of Waste	C. Unit of Measure (Enter code)	D. PROCESSES									
								(1) PROCESS CODES (Enter code)									(2) PROCESS DESCRIPTION (If a code is not entered in 9.D(1))
	1	D	0	0	1	13,500	T	S	0	2	T	0	1				CPP-604 Process Condensate Collection Tanks (VES-WL-106, VES-WL-107, VES-WL-163)
	2	D	0	0	2												INCLUDED WITH ABOVE
	3	D	0	0	4												INCLUDED WITH ABOVE
	4	D	0	0	5												INCLUDED WITH ABOVE
	5	D	0	0	6												INCLUDED WITH ABOVE
	6	D	0	0	7												INCLUDED WITH ABOVE
	7	D	0	0	8												INCLUDED WITH ABOVE
	8	D	0	0	9												INCLUDED WITH ABOVE
	9	D	0	1	0												INCLUDED WITH ABOVE
1	0	D	0	1	1												INCLUDED WITH ABOVE
1	1	D	0	1	8												INCLUDED WITH ABOVE
1	2	D	0	1	9												INCLUDED WITH ABOVE
1	3	D	0	2	1												INCLUDED WITH ABOVE
1	4	D	0	2	2												INCLUDED WITH ABOVE
1	5	D	0	2	6												INCLUDED WITH ABOVE
1	6	D	0	2	8												INCLUDED WITH ABOVE
1	7	D	0	3	2												INCLUDED WITH ABOVE
1	8	D	0	3	4												INCLUDED WITH ABOVE
1	9	D	0	3	5												INCLUDED WITH ABOVE
2	0	D	0	3	6												INCLUDED WITH ABOVE
2	1	D	0	3	8												INCLUDED WITH ABOVE
2	2	D	0	3	9												INCLUDED WITH ABOVE
2	3	D	0	4	0												INCLUDED WITH ABOVE
2	4	F	0	0	1												INCLUDED WITH ABOVE
2	5	F	0	0	2												INCLUDED WITH ABOVE
2	6	F	0	0	3												INCLUDED WITH ABOVE
2	7	F	0	0	5												INCLUDED WITH ABOVE
2	8	U	1	3	4												INCLUDED WITH ABOVE
2	9																
3	0																
3	1																
3	2																
3	3																
3	4																
3	5																
3	6																

9. Description of Hazardous Wastes ***(Continued. Use the additional sheet(s) as necessary; number pages as 5a, etc.)***

Line Number		A. EPA Hazardous Waste No. (Enter code)				B. Estimated Annual Qty of Waste	C. Unit of Measure (Enter code)	D. PROCESSES									
								(1) PROCESS CODES (Enter code)									(2) PROCESS DESCRIPTION (If a code is not entered in 9.D(1))
	1	D	0	0	1	13,500	T	S	0	2							CPP-1618 Acid Fractionator Waste Feed Head Tank (VES-WL-197)
	2	D	0	0	2												INCLUDED WITH ABOVE
	3	D	0	0	4												INCLUDED WITH ABOVE
	4	D	0	0	5												INCLUDED WITH ABOVE
	5	D	0	0	6												INCLUDED WITH ABOVE
	6	D	0	0	7												INCLUDED WITH ABOVE
	7	D	0	0	8												INCLUDED WITH ABOVE
	8	D	0	0	9												INCLUDED WITH ABOVE
	9	D	0	1	0												INCLUDED WITH ABOVE
1	0	D	0	1	1												INCLUDED WITH ABOVE
1	1	D	0	1	8												INCLUDED WITH ABOVE
1	2	D	0	1	9												INCLUDED WITH ABOVE
1	3	D	0	2	1												INCLUDED WITH ABOVE
1	4	D	0	2	2												INCLUDED WITH ABOVE
1	5	D	0	2	6												INCLUDED WITH ABOVE
1	6	D	0	2	8												INCLUDED WITH ABOVE
1	7	D	0	3	2												INCLUDED WITH ABOVE
1	8	D	0	3	4												INCLUDED WITH ABOVE
1	9	D	0	3	5												INCLUDED WITH ABOVE
2	0	D	0	3	6												INCLUDED WITH ABOVE
2	1	D	0	3	8												INCLUDED WITH ABOVE
2	2	D	0	3	9												INCLUDED WITH ABOVE
2	3	D	0	4	0												INCLUDED WITH ABOVE
2	4	F	0	0	1												INCLUDED WITH ABOVE
2	5	F	0	0	2												INCLUDED WITH ABOVE
2	6	F	0	0	3												INCLUDED WITH ABOVE
2	7	F	0	0	5												INCLUDED WITH ABOVE
2	8	U	1	3	4												INCLUDED WITH ABOVE
2	9																
3	0																
3	1																
3	2																
3	3																
3	4																
3	5																
3	6																

9. Description of Hazardous Wastes ***(Continued. Use the additional sheet(s) as necessary; number pages as 5a, etc.)***

Line Number		A. EPA Hazardous Waste No. (Enter code)				B. Estimated Annual Qty of Waste	C. Unit of Measure (Enter code)	D. PROCESSES									
								(1) PROCESS CODES (Enter code)									(2) PROCESS DESCRIPTION (If a code is not entered in 9.D(1))
	1	D	0	0	1	13,500	T	S	0	2	X	9	9				CPP-1618 Acid Fractionators (VES-WLL-170, VES-WLK-171)
	2	D	0	0	2												INCLUDED WITH ABOVE
	3	D	0	0	4												INCLUDED WITH ABOVE
	4	D	0	0	5												INCLUDED WITH ABOVE
	5	D	0	0	6												INCLUDED WITH ABOVE
	6	D	0	0	7												INCLUDED WITH ABOVE
	7	D	0	0	8												INCLUDED WITH ABOVE
	8	D	0	0	9												INCLUDED WITH ABOVE
	9	D	0	1	0												INCLUDED WITH ABOVE
1	0	D	0	1	1												INCLUDED WITH ABOVE
1	1	D	0	1	8												INCLUDED WITH ABOVE
1	2	D	0	1	9												INCLUDED WITH ABOVE
1	3	D	0	2	1												INCLUDED WITH ABOVE
1	4	D	0	2	2												INCLUDED WITH ABOVE
1	5	D	0	2	6												INCLUDED WITH ABOVE
1	6	D	0	2	8												INCLUDED WITH ABOVE
1	7	D	0	3	2												INCLUDED WITH ABOVE
1	8	D	0	3	4												INCLUDED WITH ABOVE
1	9	D	0	3	5												INCLUDED WITH ABOVE
2	0	D	0	3	6												INCLUDED WITH ABOVE
2	1	D	0	3	8												INCLUDED WITH ABOVE
2	2	D	0	3	9												INCLUDED WITH ABOVE
2	3	D	0	4	0												INCLUDED WITH ABOVE
2	4	F	0	0	1												INCLUDED WITH ABOVE
2	5	F	0	0	2												INCLUDED WITH ABOVE
2	6	F	0	0	3												INCLUDED WITH ABOVE
2	7	F	0	0	5												INCLUDED WITH ABOVE
2	8	U	1	3	4												INCLUDED WITH ABOVE
2	9																
3	0																
3	1																
3	2																
3	3																
3	4																
3	5																
3	6																

9. Description of Hazardous Wastes ***(Continued. Use the additional sheet(s) as necessary; number pages as 5a, etc.)***

Line Number		A. EPA Hazardous Waste No. (Enter code)				B. Estimated Annual Qty of Waste	C. Unit of Measure (Enter code)	D. PROCESSES									
								(1) PROCESS CODES (Enter code)									(2) PROCESS DESCRIPTION (If a code is not entered in 9.D(1))
	1	D	0	0	1	270	T	S	0	2							CPP-1618 Acid Fractionator Bottoms Tank (VES-WLL-195)
	2	D	0	0	2												INCLUDED WITH ABOVE
	3	D	0	0	4												INCLUDED WITH ABOVE
	4	D	0	0	5												INCLUDED WITH ABOVE
	5	D	0	0	6												INCLUDED WITH ABOVE
	6	D	0	0	7												INCLUDED WITH ABOVE
	7	D	0	0	8												INCLUDED WITH ABOVE
	8	D	0	0	9												INCLUDED WITH ABOVE
	9	D	0	1	0												INCLUDED WITH ABOVE
1	0	D	0	1	1												INCLUDED WITH ABOVE
1	1	D	0	1	8												INCLUDED WITH ABOVE
1	2	D	0	1	9												INCLUDED WITH ABOVE
1	3	D	0	2	1												INCLUDED WITH ABOVE
1	4	D	0	2	2												INCLUDED WITH ABOVE
1	5	D	0	2	6												INCLUDED WITH ABOVE
1	6	D	0	2	8												INCLUDED WITH ABOVE
1	7	D	0	3	2												INCLUDED WITH ABOVE
1	8	D	0	3	4												INCLUDED WITH ABOVE
1	9	D	0	3	5												INCLUDED WITH ABOVE
2	0	D	0	3	6												INCLUDED WITH ABOVE
2	1	D	0	3	8												INCLUDED WITH ABOVE
2	2	D	0	3	9												INCLUDED WITH ABOVE
2	3	D	0	4	0												INCLUDED WITH ABOVE
2	4	F	0	0	1												INCLUDED WITH ABOVE
2	5	F	0	0	2												INCLUDED WITH ABOVE
2	6	F	0	0	3												INCLUDED WITH ABOVE
2	7	F	0	0	5												INCLUDED WITH ABOVE
2	8	U	1	3	4												INCLUDED WITH ABOVE
2	9																
3	0																
3	1																
3	2																
3	3																
3	4																
3	5																
3	6																

9. Description of Hazardous Wastes ***(Continued. Use the additional sheet(s) as necessary; number pages as 5a, etc.)***

Line Number		A. EPA Hazardous Waste No. (Enter code)				B. Estimated Annual Qty of Waste	C. Unit of Measure (Enter code)	D. PROCESSES									
								(1) PROCESS CODES (Enter code)									(2) PROCESS DESCRIPTION (If a code is not entered in 9.D(1))
	1	D	0	0	1	270	T	S	0	2							CPP-1618 LET&D Nitric Acid Recycle Tank System (VES-NCR-171, VES-NCR-173)
	2	D	0	0	2												INCLUDED WITH ABOVE
	3	D	0	0	4												INCLUDED WITH ABOVE
	4	D	0	0	5												INCLUDED WITH ABOVE
	5	D	0	0	6												INCLUDED WITH ABOVE
	6	D	0	0	7												INCLUDED WITH ABOVE
	7	D	0	0	8												INCLUDED WITH ABOVE
	8	D	0	0	9												INCLUDED WITH ABOVE
	9	D	0	1	0												INCLUDED WITH ABOVE
1	0	D	0	1	1												INCLUDED WITH ABOVE
1	1	D	0	1	8												INCLUDED WITH ABOVE
1	2	D	0	1	9												INCLUDED WITH ABOVE
1	3	D	0	2	1												INCLUDED WITH ABOVE
1	4	D	0	2	2												INCLUDED WITH ABOVE
1	5	D	0	2	6												INCLUDED WITH ABOVE
1	6	D	0	2	8												INCLUDED WITH ABOVE
1	7	D	0	3	2												INCLUDED WITH ABOVE
1	8	D	0	3	4												INCLUDED WITH ABOVE
1	9	D	0	3	5												INCLUDED WITH ABOVE
2	0	D	0	3	6												INCLUDED WITH ABOVE
2	1	D	0	3	8												INCLUDED WITH ABOVE
2	2	D	0	3	9												INCLUDED WITH ABOVE
2	3	D	0	4	0												INCLUDED WITH ABOVE
2	4	F	0	0	1												INCLUDED WITH ABOVE
2	5	F	0	0	2												INCLUDED WITH ABOVE
2	6	F	0	0	3												INCLUDED WITH ABOVE
2	7	F	0	0	5												INCLUDED WITH ABOVE
2	8	U	1	3	4												INCLUDED WITH ABOVE
2	9																
3	0																
3	1																
3	2																
3	3																
3	4																
3	5																
3	6																

9. Description of Hazardous Wastes ***(Continued. Use the additional sheet(s) as necessary; number pages as 5a, etc.)***

Line Number		A. EPA Hazardous Waste No. (Enter code)				B. Estimated Annual Qty of Waste	C. Unit of Measure (Enter code)	D. PROCESSES									
								(1) PROCESS CODES (Enter code)									(2) PROCESS DESCRIPTION (If a code is not entered in 9.D(1))
	1	D	0	0	1	54,800	T	S	0	2	T	0	1				CPP-659 Blend/Hold Tanks (VES-NCC-101, VES-NCC-102, VES-NCC-103)
	2	D	0	0	2												INCLUDED WITH ABOVE
	3	D	0	0	4												INCLUDED WITH ABOVE
	4	D	0	0	5												INCLUDED WITH ABOVE
	5	D	0	0	6												INCLUDED WITH ABOVE
	6	D	0	0	7												INCLUDED WITH ABOVE
	7	D	0	0	8												INCLUDED WITH ABOVE
	8	D	0	0	9												INCLUDED WITH ABOVE
	9	D	0	1	0												INCLUDED WITH ABOVE
1	0	D	0	1	1												INCLUDED WITH ABOVE
1	1	D	0	1	8												INCLUDED WITH ABOVE
1	2	D	0	1	9												INCLUDED WITH ABOVE
1	3	D	0	2	1												INCLUDED WITH ABOVE
1	4	D	0	2	2												INCLUDED WITH ABOVE
1	5	D	0	2	6												INCLUDED WITH ABOVE
1	6	D	0	2	8												INCLUDED WITH ABOVE
1	7	D	0	3	2												INCLUDED WITH ABOVE
1	8	D	0	3	4												INCLUDED WITH ABOVE
1	9	D	0	3	5												INCLUDED WITH ABOVE
2	0	D	0	3	6												INCLUDED WITH ABOVE
2	1	D	0	3	8												INCLUDED WITH ABOVE
2	2	D	0	3	9												INCLUDED WITH ABOVE
2	3	D	0	4	0												INCLUDED WITH ABOVE
2	4	F	0	0	1												INCLUDED WITH ABOVE
2	5	F	0	0	2												INCLUDED WITH ABOVE
2	6	F	0	0	3												INCLUDED WITH ABOVE
2	7	F	0	0	5												INCLUDED WITH ABOVE
2	8	U	1	3	4												INCLUDED WITH ABOVE
2	9																
3	0																
3	1																
3	2																
3	3																
3	4																
3	5																
3	6																

9. Description of Hazardous Wastes ***(Continued. Use the additional sheet(s) as necessary; number pages as 5a, etc.)***

Line Number		A. EPA Hazardous Waste No. (Enter code)				B. Estimated Annual Qty of Waste	C. Unit of Measure (Enter code)	D. PROCESSES									
								(1) PROCESS CODES (Enter code)									(2) PROCESS DESCRIPTION (If a code is not entered in 9.D(1))
	1	D	0	0	1	12,800	T	S	0	2	T	0	1				CPP-659 Fluoride Hot Sump Tank (VES-NCC-119)
	2	D	0	0	2												INCLUDED WITH ABOVE
	3	D	0	0	4												INCLUDED WITH ABOVE
	4	D	0	0	5												INCLUDED WITH ABOVE
	5	D	0	0	6												INCLUDED WITH ABOVE
	6	D	0	0	7												INCLUDED WITH ABOVE
	7	D	0	0	8												INCLUDED WITH ABOVE
	8	D	0	0	9												INCLUDED WITH ABOVE
	9	D	0	1	0												INCLUDED WITH ABOVE
1	0	D	0	1	1												INCLUDED WITH ABOVE
1	1	D	0	1	8												INCLUDED WITH ABOVE
1	2	D	0	1	9												INCLUDED WITH ABOVE
1	3	D	0	2	1												INCLUDED WITH ABOVE
1	4	D	0	2	2												INCLUDED WITH ABOVE
1	5	D	0	2	6												INCLUDED WITH ABOVE
1	6	D	0	2	8												INCLUDED WITH ABOVE
1	7	D	0	3	2												INCLUDED WITH ABOVE
1	8	D	0	3	4												INCLUDED WITH ABOVE
1	9	D	0	3	5												INCLUDED WITH ABOVE
2	0	D	0	3	6												INCLUDED WITH ABOVE
2	1	D	0	3	8												INCLUDED WITH ABOVE
2	2	D	0	3	9												INCLUDED WITH ABOVE
2	3	D	0	4	0												INCLUDED WITH ABOVE
2	4	F	0	0	1												INCLUDED WITH ABOVE
2	5	F	0	0	2												INCLUDED WITH ABOVE
2	6	F	0	0	3												INCLUDED WITH ABOVE
2	7	F	0	0	5												INCLUDED WITH ABOVE
2	8	U	1	3	4												INCLUDED WITH ABOVE
2	9																
3	0																
3	1																
3	2																
3	3																
3	4																
3	5																
3	6																

9. Description of Hazardous Wastes ***(Continued. Use the additional sheet(s) as necessary; number pages as 5a, etc.)***

Line Number		A. EPA Hazardous Waste No. (Enter code)				B. Estimated Annual Qty of Waste	C. Unit of Measure (Enter code)	D. PROCESSES									
								(1) PROCESS CODES (Enter code)									(2) PROCESS DESCRIPTION (If a code is not entered in 9.D(1))
	1	D	0	0	1	15,800	T	S	0	2	T	0	1				CPP-659 Non-Fluoride Hot Sump Tank (VES-NCC-122)
	2	D	0	0	2												INCLUDED WITH ABOVE
	3	D	0	0	4												INCLUDED WITH ABOVE
	4	D	0	0	5												INCLUDED WITH ABOVE
	5	D	0	0	6												INCLUDED WITH ABOVE
	6	D	0	0	7												INCLUDED WITH ABOVE
	7	D	0	0	8												INCLUDED WITH ABOVE
	8	D	0	0	9												INCLUDED WITH ABOVE
	9	D	0	1	0												INCLUDED WITH ABOVE
1	0	D	0	1	1												INCLUDED WITH ABOVE
1	1	D	0	1	8												INCLUDED WITH ABOVE
1	2	D	0	1	9												INCLUDED WITH ABOVE
1	3	D	0	2	1												INCLUDED WITH ABOVE
1	4	D	0	2	2												INCLUDED WITH ABOVE
1	5	D	0	2	6												INCLUDED WITH ABOVE
1	6	D	0	2	8												INCLUDED WITH ABOVE
1	7	D	0	3	2												INCLUDED WITH ABOVE
1	8	D	0	3	4												INCLUDED WITH ABOVE
1	9	D	0	3	5												INCLUDED WITH ABOVE
2	0	D	0	3	6												INCLUDED WITH ABOVE
2	1	D	0	3	8												INCLUDED WITH ABOVE
2	2	D	0	3	9												INCLUDED WITH ABOVE
2	3	D	0	4	0												INCLUDED WITH ABOVE
2	4	F	0	0	1												INCLUDED WITH ABOVE
2	5	F	0	0	2												INCLUDED WITH ABOVE
2	6	F	0	0	3												INCLUDED WITH ABOVE
2	7	F	0	0	5												INCLUDED WITH ABOVE
2	8	U	1	3	4												INCLUDED WITH ABOVE
2	9																
3	0																
3	1																
3	2																
3	3																
3	4																
3	5																
3	6																

9. Description of Hazardous Wastes ***(Continued. Use the additional sheet(s) as necessary; number pages as 5a, etc.)***

Line Number		A. EPA Hazardous Waste No. (Enter code)				B. Estimated Annual Qty of Waste	C. Unit of Measure (Enter code)	D. PROCESSES									
								(1) PROCESS CODES (Enter code)									(2) PROCESS DESCRIPTION (If a code is not entered in 9.D(1))
	1	D	0	0	1	19,750	T	S	0	2	X	9	9				CPP-659 Evaporator (EVAP-NCC-150 includes: VES-NCC-150, HE-NCC-150, HE-NCC-351)
	2	D	0	0	2												INCLUDED WITH ABOVE
	3	D	0	0	4												INCLUDED WITH ABOVE
	4	D	0	0	5												INCLUDED WITH ABOVE
	5	D	0	0	6												INCLUDED WITH ABOVE
	6	D	0	0	7												INCLUDED WITH ABOVE
	7	D	0	0	8												INCLUDED WITH ABOVE
	8	D	0	0	9												INCLUDED WITH ABOVE
	9	D	0	1	0												INCLUDED WITH ABOVE
1	0	D	0	1	1												INCLUDED WITH ABOVE
1	1	D	0	1	8												INCLUDED WITH ABOVE
1	2	D	0	1	9												INCLUDED WITH ABOVE
1	3	D	0	2	1												INCLUDED WITH ABOVE
1	4	D	0	2	2												INCLUDED WITH ABOVE
1	5	D	0	2	6												INCLUDED WITH ABOVE
1	6	D	0	2	8												INCLUDED WITH ABOVE
1	7	D	0	3	2												INCLUDED WITH ABOVE
1	8	D	0	3	4												INCLUDED WITH ABOVE
1	9	D	0	3	5												INCLUDED WITH ABOVE
2	0	D	0	3	6												INCLUDED WITH ABOVE
2	1	D	0	3	8												INCLUDED WITH ABOVE
2	2	D	0	3	9												INCLUDED WITH ABOVE
2	3	D	0	4	0												INCLUDED WITH ABOVE
2	4	F	0	0	1												INCLUDED WITH ABOVE
2	5	F	0	0	2												INCLUDED WITH ABOVE
2	6	F	0	0	3												INCLUDED WITH ABOVE
2	7	F	0	0	5												INCLUDED WITH ABOVE
2	8	U	1	3	4												INCLUDED WITH ABOVE
2	9																
3	0																
3	1																
3	2																
3	3																
3	4																
3	5																
3	6																

9. Description of Hazardous Wastes ***(Continued. Use the additional sheet(s) as necessary; number pages as 5a, etc.)***

Line Number		A. EPA Hazardous Waste No. (Enter code)				B. Estimated Annual Qty of Waste	C. Unit of Measure (Enter code)	D. PROCESSES									
								(1) PROCESS CODES (Enter code)									(2) PROCESS DESCRIPTION (If a code is not entered in 9.D(1))
	1	D	0	0	1	7,900	T	S	0	2	T	0	1				CPP-659 Process Off-gas Condensate Tank (VES-NCC-108)
	2	D	0	0	2												INCLUDED WITH ABOVE
	3	D	0	0	4												INCLUDED WITH ABOVE
	4	D	0	0	5												INCLUDED WITH ABOVE
	5	D	0	0	6												INCLUDED WITH ABOVE
	6	D	0	0	7												INCLUDED WITH ABOVE
	7	D	0	0	8												INCLUDED WITH ABOVE
	8	D	0	0	9												INCLUDED WITH ABOVE
	9	D	0	1	0												INCLUDED WITH ABOVE
1	0	D	0	1	1												INCLUDED WITH ABOVE
1	1	D	0	1	8												INCLUDED WITH ABOVE
1	2	D	0	1	9												INCLUDED WITH ABOVE
1	3	D	0	2	1												INCLUDED WITH ABOVE
1	4	D	0	2	2												INCLUDED WITH ABOVE
1	5	D	0	2	6												INCLUDED WITH ABOVE
1	6	D	0	2	8												INCLUDED WITH ABOVE
1	7	D	0	3	2												INCLUDED WITH ABOVE
1	8	D	0	3	4												INCLUDED WITH ABOVE
1	9	D	0	3	5												INCLUDED WITH ABOVE
2	0	D	0	3	6												INCLUDED WITH ABOVE
2	1	D	0	3	8												INCLUDED WITH ABOVE
2	2	D	0	3	9												INCLUDED WITH ABOVE
2	3	D	0	4	0												INCLUDED WITH ABOVE
2	4	F	0	0	1												INCLUDED WITH ABOVE
2	5	F	0	0	2												INCLUDED WITH ABOVE
2	6	F	0	0	3												INCLUDED WITH ABOVE
2	7	F	0	0	5												INCLUDED WITH ABOVE
2	8	U	1	3	4												INCLUDED WITH ABOVE
2	9																
3	0																
3	1																
3	2																
3	3																
3	4																
3	5																
3	6																

9. Description of Hazardous Wastes ***(Continued. Use the additional sheet(s) as necessary; number pages as 5a, etc.)***

Line Number		A. EPA Hazardous Waste No. (Enter code)				B. Estimated Annual Qty of Waste	C. Unit of Measure (Enter code)	D. PROCESSES									
								(1) PROCESS CODES (Enter code)									(2) PROCESS DESCRIPTION (If a code is not entered in 9.D(1))
	1	D	0	0	1	7,900	T	S	0	2							CPP-659 Process Off-gas Condensate Tanks (VES-NCC-116, VES-NCC-136)
	2	D	0	0	2												INCLUDED WITH ABOVE
	3	D	0	0	4												INCLUDED WITH ABOVE
	4	D	0	0	5												INCLUDED WITH ABOVE
	5	D	0	0	6												INCLUDED WITH ABOVE
	6	D	0	0	7												INCLUDED WITH ABOVE
	7	D	0	0	8												INCLUDED WITH ABOVE
	8	D	0	0	9												INCLUDED WITH ABOVE
	9	D	0	1	0												INCLUDED WITH ABOVE
1	0	D	0	1	1												INCLUDED WITH ABOVE
1	1	D	0	1	8												INCLUDED WITH ABOVE
1	2	D	0	1	9												INCLUDED WITH ABOVE
1	3	D	0	2	1												INCLUDED WITH ABOVE
1	4	D	0	2	2												INCLUDED WITH ABOVE
1	5	D	0	2	6												INCLUDED WITH ABOVE
1	6	D	0	2	8												INCLUDED WITH ABOVE
1	7	D	0	3	2												INCLUDED WITH ABOVE
1	8	D	0	3	4												INCLUDED WITH ABOVE
1	9	D	0	3	5												INCLUDED WITH ABOVE
2	0	D	0	3	6												INCLUDED WITH ABOVE
2	1	D	0	3	8												INCLUDED WITH ABOVE
2	2	D	0	3	9												INCLUDED WITH ABOVE
2	3	D	0	4	0												INCLUDED WITH ABOVE
2	4	F	0	0	1												INCLUDED WITH ABOVE
2	5	F	0	0	2												INCLUDED WITH ABOVE
2	6	F	0	0	3												INCLUDED WITH ABOVE
2	7	F	0	0	5												INCLUDED WITH ABOVE
2	8	U	1	3	4												INCLUDED WITH ABOVE
2	9																
3	0																
3	1																
3	2																
3	3																
3	4																
3	5																
3	6																

9. Description of Hazardous Wastes ***(Continued. Use the additional sheet(s) as necessary; number pages as 5a, etc.)***

Line Number		A. EPA Hazardous Waste No. (Enter code)				B. Estimated Annual Qty of Waste	C. Unit of Measure (Enter code)	D. PROCESSES									
								(1) PROCESS CODES (Enter code)									(2) PROCESS DESCRIPTION (If a code is not entered in 9.D(1))
	1	D	0	0	1	19,750	T	S	0	2							CPP-659 Constant Head Feed Tank (VES-NCC-152)
	2	D	0	0	2												INCLUDED WITH ABOVE
	3	D	0	0	4												INCLUDED WITH ABOVE
	4	D	0	0	5												INCLUDED WITH ABOVE
	5	D	0	0	6												INCLUDED WITH ABOVE
	6	D	0	0	7												INCLUDED WITH ABOVE
	7	D	0	0	8												INCLUDED WITH ABOVE
	8	D	0	0	9												INCLUDED WITH ABOVE
	9	D	0	1	0												INCLUDED WITH ABOVE
1	0	D	0	1	1												INCLUDED WITH ABOVE
1	1	D	0	1	8												INCLUDED WITH ABOVE
1	2	D	0	1	9												INCLUDED WITH ABOVE
1	3	D	0	2	1												INCLUDED WITH ABOVE
1	4	D	0	2	2												INCLUDED WITH ABOVE
1	5	D	0	2	6												INCLUDED WITH ABOVE
1	6	D	0	2	8												INCLUDED WITH ABOVE
1	7	D	0	3	2												INCLUDED WITH ABOVE
1	8	D	0	3	4												INCLUDED WITH ABOVE
1	9	D	0	3	5												INCLUDED WITH ABOVE
2	0	D	0	3	6												INCLUDED WITH ABOVE
2	1	D	0	3	8												INCLUDED WITH ABOVE
2	2	D	0	3	9												INCLUDED WITH ABOVE
2	3	D	0	4	0												INCLUDED WITH ABOVE
2	4	F	0	0	1												INCLUDED WITH ABOVE
2	5	F	0	0	2												INCLUDED WITH ABOVE
2	6	F	0	0	3												INCLUDED WITH ABOVE
2	7	F	0	0	5												INCLUDED WITH ABOVE
2	8	U	1	3	4												INCLUDED WITH ABOVE
2	9																
3	0																
3	1																
3	2																
3	3																
3	4																
3	5																
3	6																

9. Description of Hazardous Wastes ***(Continued. Use the additional sheet(s) as necessary; number pages as 5a, etc.)***

Line Number		A. EPA Hazardous Waste No. (Enter code)				B. Estimated Annual Qty of Waste	C. Unit of Measure (Enter code)	D. PROCESSES									
								(1) PROCESS CODES (Enter code)									(2) PROCESS DESCRIPTION (If a code is not entered in 9.D(1))
	1	D	0	0	1	925	T	S	0	1							CPP-1696 Integrated Waste Treatment Unit
	2	D	0	0	2	5,400	T	S	0	2							INCLUDED WITH ABOVE
	3	D	0	0	4	5,400	T	T	0	1							INCLUDED WITH ABOVE
	4	D	0	0	5	5,400	T	X	9	9							INCLUDED WITH ABOVE
	5	D	0	0	6												INCLUDED WITH ABOVE
	6	D	0	0	7												INCLUDED WITH ABOVE
	7	D	0	0	8												INCLUDED WITH ABOVE
	8	D	0	0	9												INCLUDED WITH ABOVE
	9	D	0	1	0												INCLUDED WITH ABOVE
1	0	D	0	1	1												INCLUDED WITH ABOVE
1	1	D	0	1	8												INCLUDED WITH ABOVE
1	2	D	0	1	9												INCLUDED WITH ABOVE
1	3	D	0	2	1												INCLUDED WITH ABOVE
1	4	D	0	2	2												INCLUDED WITH ABOVE
1	5	D	0	2	6												INCLUDED WITH ABOVE
1	6	D	0	2	8												INCLUDED WITH ABOVE
1	7	D	0	3	2												INCLUDED WITH ABOVE
1	8	D	0	3	4												INCLUDED WITH ABOVE
1	9	D	0	3	5												INCLUDED WITH ABOVE
2	0	D	0	3	6												INCLUDED WITH ABOVE
2	1	D	0	3	8												INCLUDED WITH ABOVE
2	2	D	0	3	9												INCLUDED WITH ABOVE
2	3	D	0	4	0												INCLUDED WITH ABOVE
2	4	F	0	0	1												INCLUDED WITH ABOVE
2	5	F	0	0	2												INCLUDED WITH ABOVE
2	6	F	0	0	3												INCLUDED WITH ABOVE
2	7	F	0	0	5												INCLUDED WITH ABOVE
2	8	U	1	3	4												INCLUDED WITH ABOVE
2	9																
3	0																
3	1																
3	2																
3	3																
3	4																
3	5																
3	6																

10. Map

Attach to this application a topographical map, or other equivalent map, of the area extending to at least one mile beyond property boundaries. The map must show the outline of the facility, the location of each of its existing and proposed intake and discharge structures, each of its hazardous waste treatment, storage, or disposal facilities, and each well where it injects fluids underground. Include all springs, rivers and other surface water bodies in this map area. See instructions for precise requirements.

11. Facility Drawing

All existing facilities must include a scale drawing of the facility (see instructions for more detail).

12. Photographs

All existing facilities must include photographs (aerial or ground-level) that clearly delineate all existing structures; existing storage, treatment and disposal areas; and sites of future storage, treatment or disposal areas (see instructions for more detail).

13. Comments

EPA ID NO: ID4890008952 OMB #: 2050-0034 Expires 07/31/2012

Proposed Integrated Waste Treatment Unit - Looking West

EPA ID NO: ID4890008952 OMB #: 2050-0034 Expires 07/31/2012

Proposed Integrated Waste Treatment Unit - Looking East

RCRA PERMIT

FOR THE

IDAHO NATIONAL LABORATORY

Volume 14
INTEC Liquid Waste Management System

Attachment 1, Section B
Facility Description

Revision Date: April 12, 2011

CONTENTS

ACRONYMS iii

B. FACILITY DESCRIPTION 1

B-1. General Description 1

EXHIBITS

B-1. Location of the INTEC at the INL 2

B-2. Buildings CPP-604, CPP-659, CPP-1618, and CPP-1696 at the INTEC 3

B-3. Topographic map of the INTEC. 4

B-4. Plant drainage system at the INTEC 5

B-5. Plant sanitary waste system at the INTEC 6

B-6. Building CPP-604 8

B-7. LET&D facility first floor plan. 12

B-8. Isometric View of Building CPP-659 16

B-9. Isometric Drawing of the IWTU, Building CPP-659 20

ACRONYMS

APS	Atmospheric Protection System
CFR	Code of Federal Regulations
CPP	Chemical Processing Plant
CRR	Carbon Reduction Reformer
DMR	Denitration and Mineralization Reformer
ETS	Evaporator Tank System
GAC	granular activated carbon
HEPA	high efficiency particulate air (filter)
HWMA	Hazardous Waste Management Act
IDAPA	Idaho Administrative Procedures Act
ILWMS	INTEC Liquid Waste Management System
INL	Idaho National Laboratory
INEEL	Idaho National Engineering and Environmental Laboratory
INTEC	Idaho Nuclear Technology and Engineering Center
IWTU	Integrated Waste Treatment Unit
LET&D	Liquid Effluent Treatment and Disposal
NWCF	New Waste Calcining Facility
PEWE	Process Equipment Waste Evaporator
RCRA	Resource Conservation and Recovery Act
TFF	Tank Farm Facility
TFT	Tank Farm Tank

B. FACILITY DESCRIPTION

B-1. General Description [IDAPA 58.01.05.012; 40 CFR 270.14(b)(1)]

This Hazardous Waste Management Act (HWMA)/Resource Conservation and Recovery Act (RCRA) permit addresses the Idaho Nuclear Technology and Engineering Center (INTEC) Liquid Waste Management System (ILWMS). The system consists of the Process Equipment Waste Evaporator (PEWE) system, the Liquid Effluent Treatment and Disposal (LET&D) system, the Evaporator Tank System (ETS), and the Integrated Waste Treatment Unit (IWTU). The ETS was previously referred to as the High Level Liquid Waste Evaporator. The ILWMS is located at INTEC at the Idaho National Laboratory (INL).

The INTEC is located in the south-central portion of the INL Site in Butte County. The location of this complex on the INL Site is shown in Exhibit B-1. The locations of Building Numbers CPP-604, CPP-649, CPP-659, CPP-1618, and CPP-1696 are shown in Exhibit B-2. The physical conditions around these buildings are typical for the INL Site, approximately 5,000 ft above mean sea level, as shown on the topographical map, Exhibit B-3. The area is relatively flat and receives little rainfall. However, poor drainage patterns can produce localized flooding that consists of shallow puddles that form near buildings during periods of rapid snowmelt or heavy rainfall. Due to the lack of rainfall and the poor quality of the surface soils, the site has little agricultural value. Wind patterns are generally in a northeast/southwest axis, with some seasonal variability.

Exhibit B-4 shows the surface water drainage at the INTEC. Drawing 632340 illustrates the site drainage around the IWTU (see Appendix II to this permit). Exhibit B-5 shows the sanitary waste system at the INTEC. There are no recreational areas present on or adjacent to the INTEC.

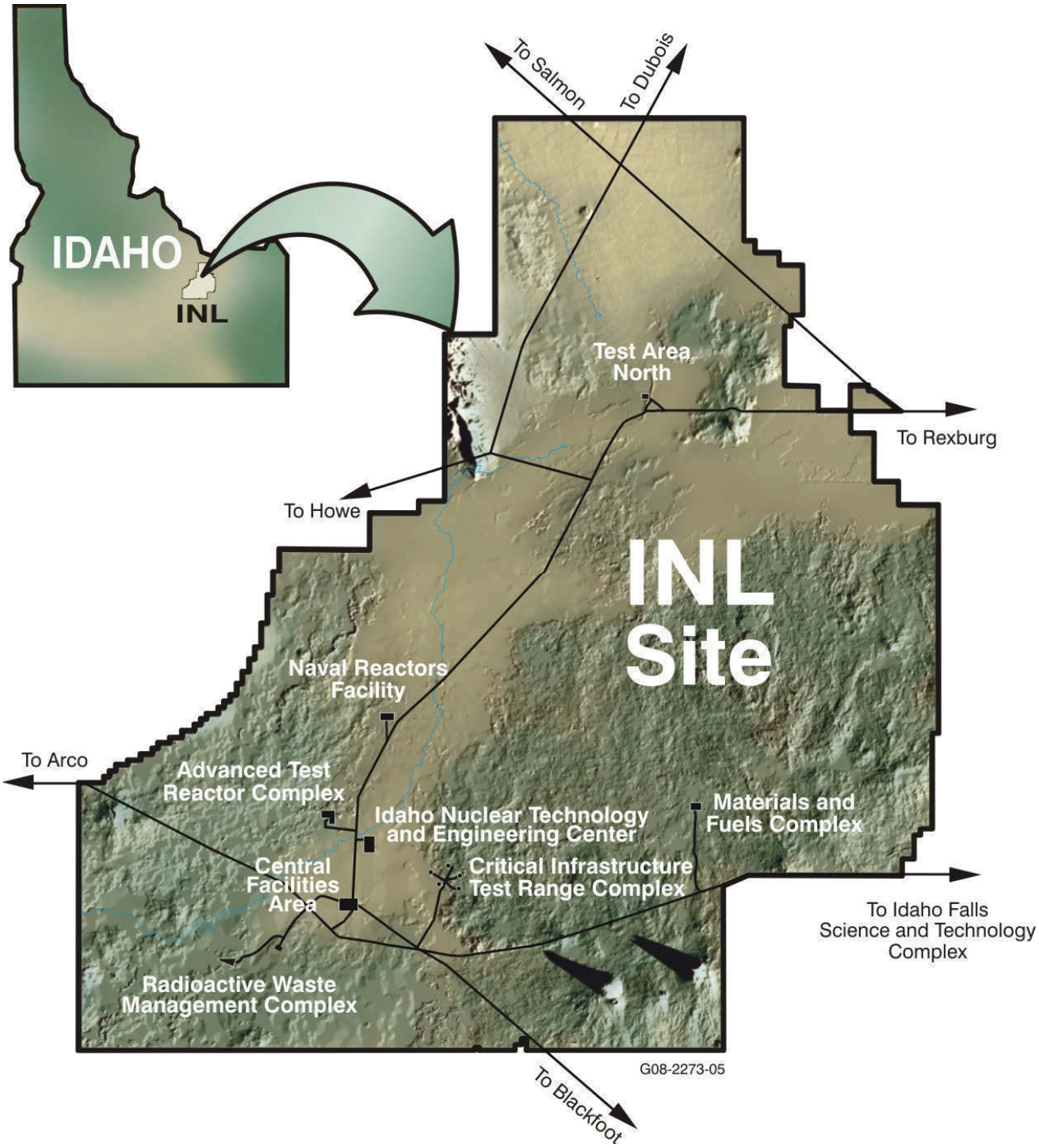

Exhibit B-1. Location of the INTEC at the INL.

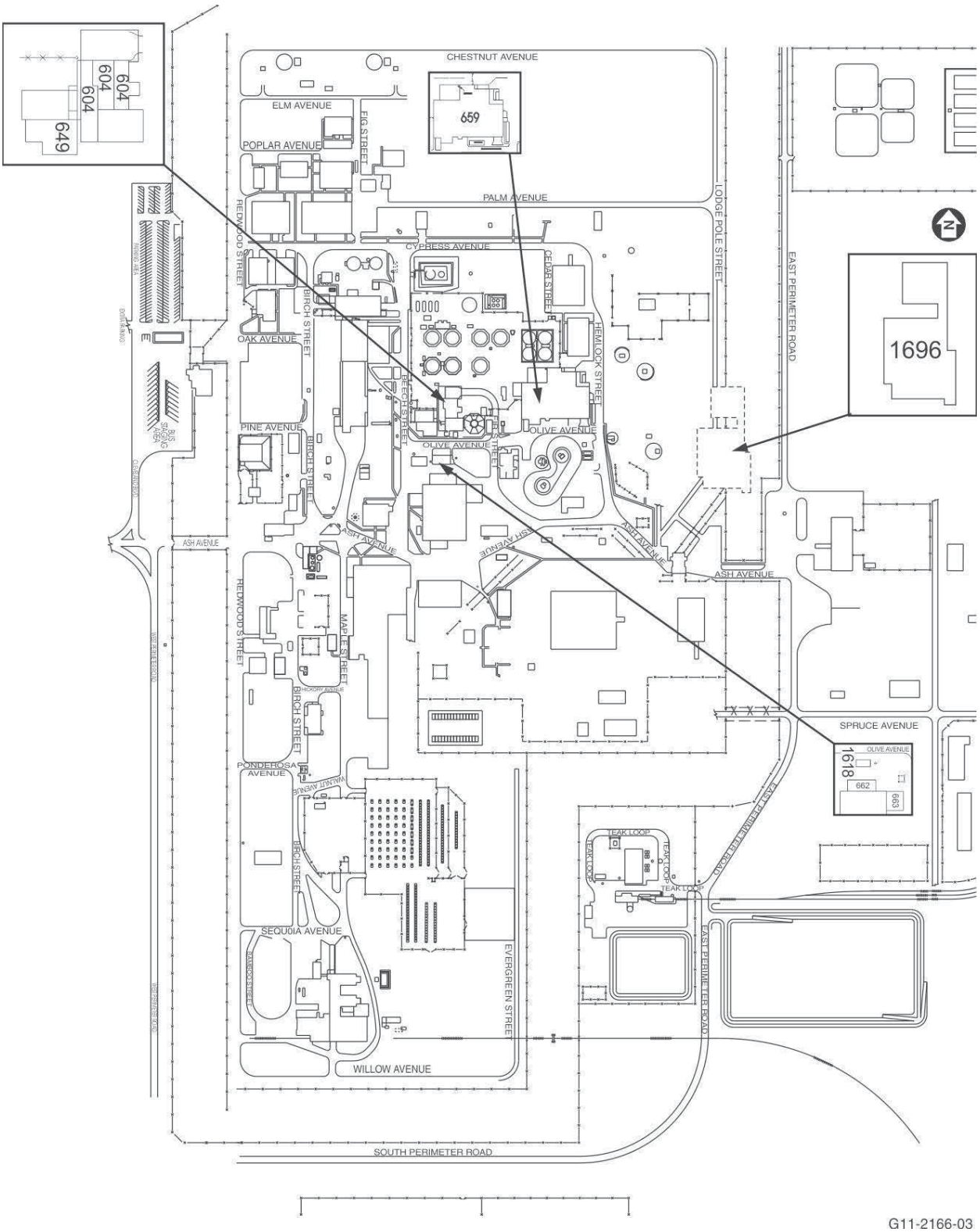

Exhibit B-2. Buildings CPP-604, CPP-659, CPP-1618, and CPP-1696 at the INTEC.

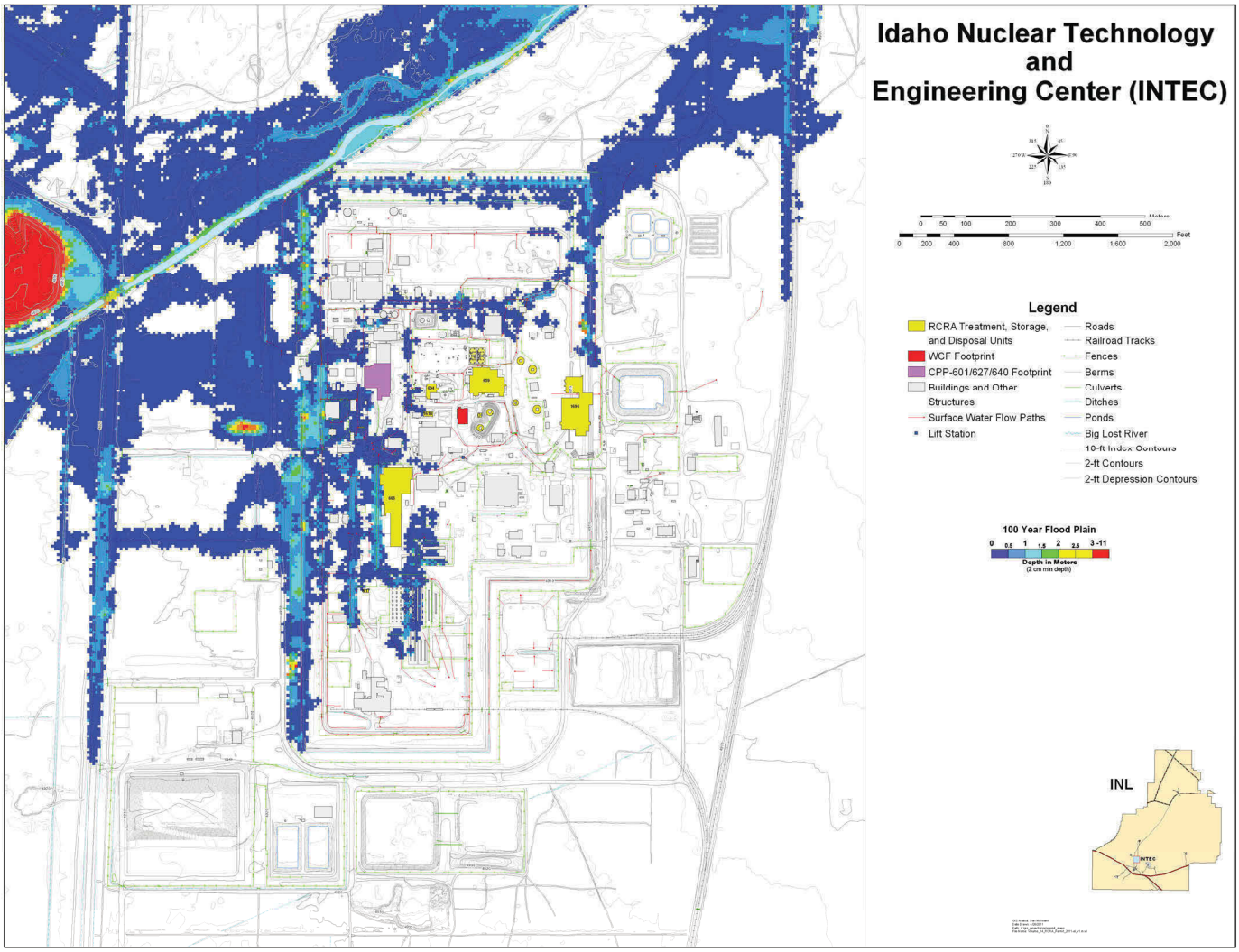

Exhibit B-3. Topographic map of the INTEC.

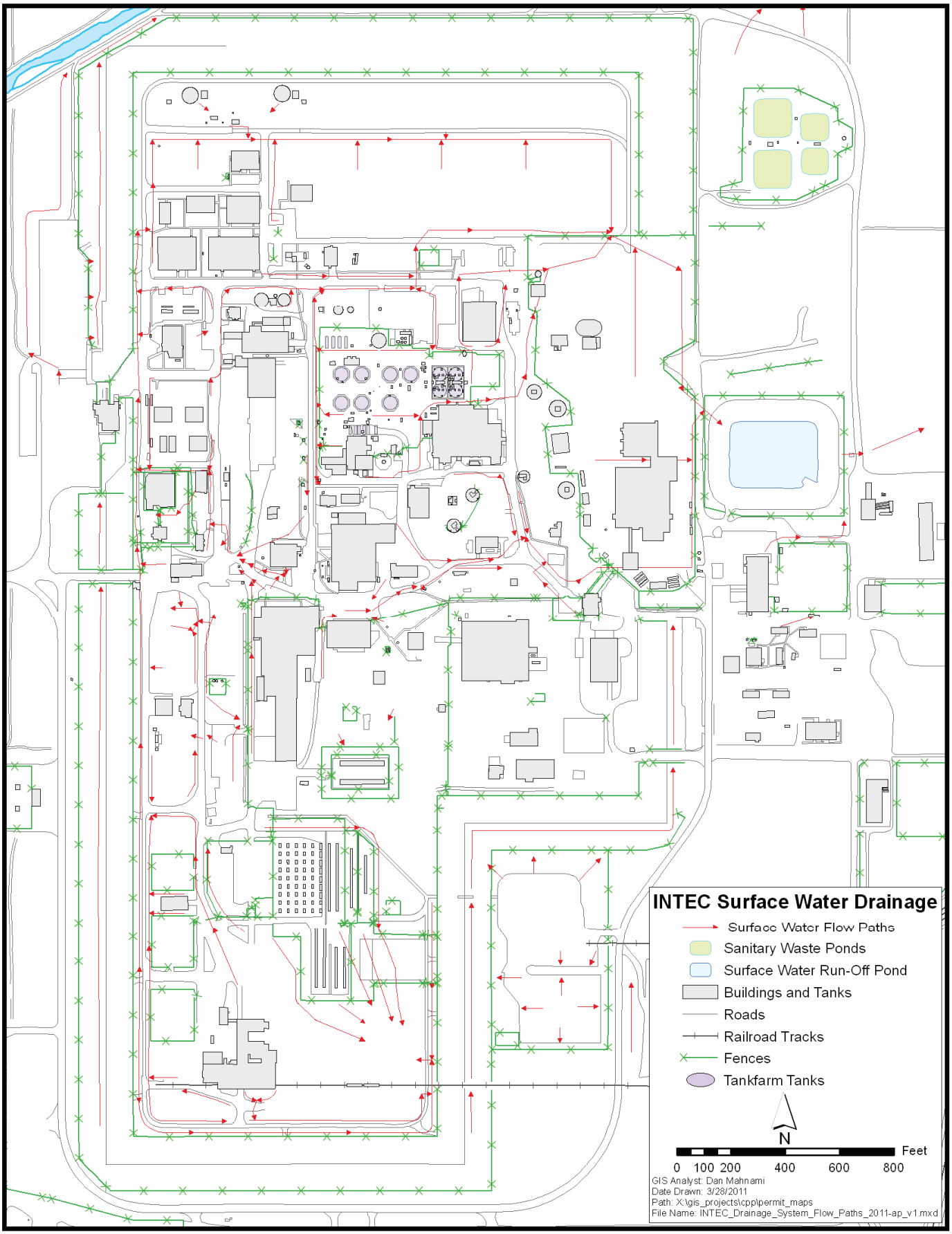

Exhibit B-4. Plant drainage system at INTEC .

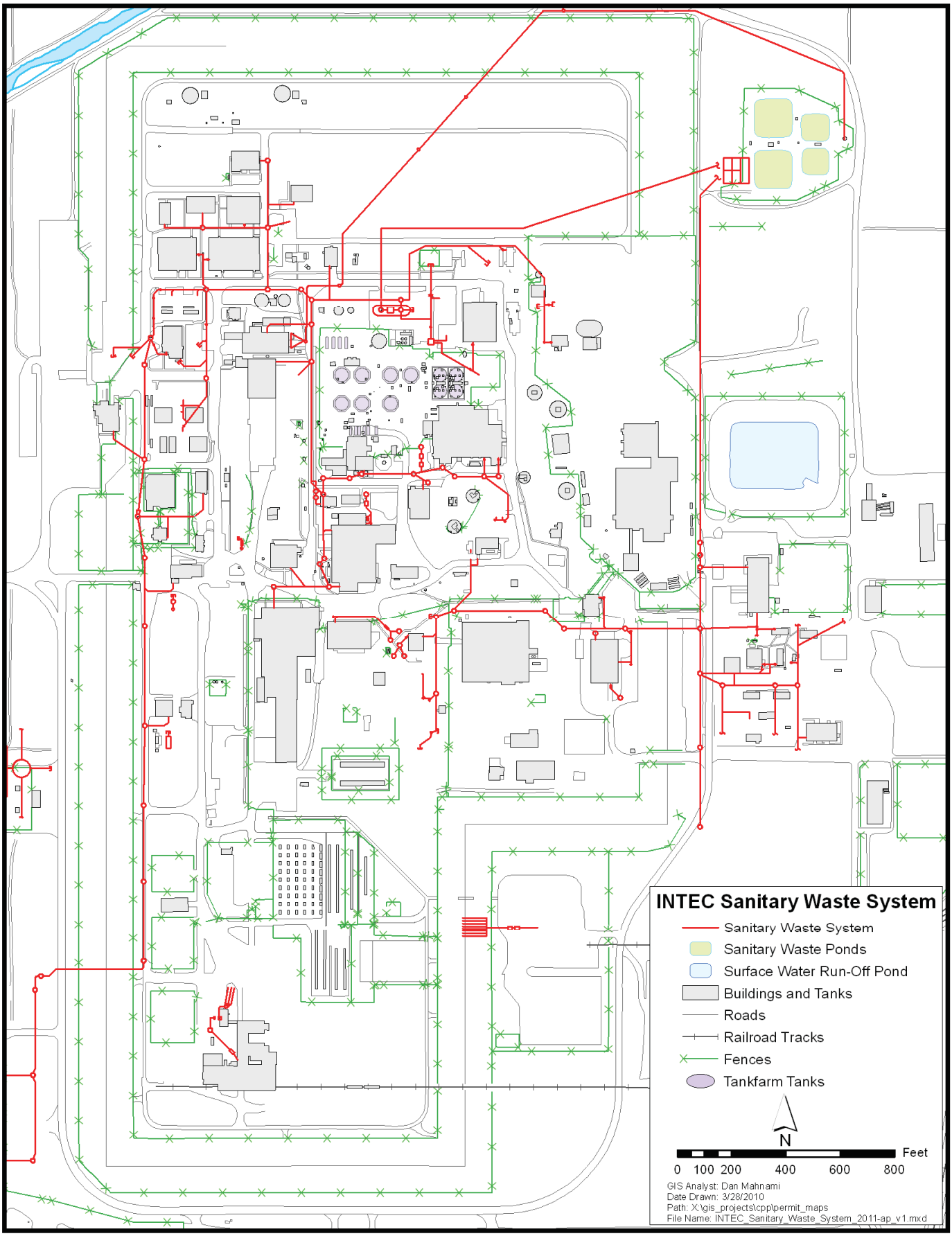

Exhibit B-5. Plant sanitary waste system at the INTEC.

PEWE System Storage and Treatment

The PEWE system reduces the volume of hazardous waste sent to the INTEC Tank Farm Facility (TFF). The PEWE system evaporates the wastes, producing concentrated wastes (bottoms) and vapor condensates (overheads). The overheads are transferred to the LET&D for further processing. The bottoms generated from the PEWE go to VES-WL-101 or VES-WL-111 or are recycled back to VES-WL-133 for further processing. From VES-WL-101 or VES-WL-111, the bottoms can be sent to the CPP-604 Tank Farm Tanks (TFT), VES-WM-100, VES-WM-101, and VES-WM-102, the TFF, or to the ETS.

Building CPP-604

The Waste Treatment Building, CPP-604, contains equipment for treating INTEC liquid wastes. The Atmospheric Protection System (APS), Building CPP-649, contains equipment for further treatment of the PEWE and ETS offgas.

CPP-604 is located south of the TFF. Exhibit B-6 is an isometric drawing of CPP-604, showing the physical arrangement of the various cells, corridors, and other areas.

CPP-604 was originally constructed in the 1951 to 1953 timeframe. In the early 1970s, an additional evaporator, EVAP-WL-129, was installed. In the early 1980s, the Evaporator Feed Sediment Tank, VES-WL-132, and the new Feed Collection Tank, VES-WL-133, were installed. Finally, in the early 1990's the CPP-604 Bottoms Collection Tank, VES-WL-111, was added to the system. The main portion of CPP-604 is located below grade and is constructed of reinforced concrete. The building is approximately 115 ft wide on its widest end (north end) and 130 ft long on its longest side (west side). Drawings 400814 and 400815 in the drawing package (Appendix II) included with this permit represent the space occupancy floor plan for CPP-604.

The building CPP-604 consists of three primary areas (See Exhibit B-6) associated with this permit.

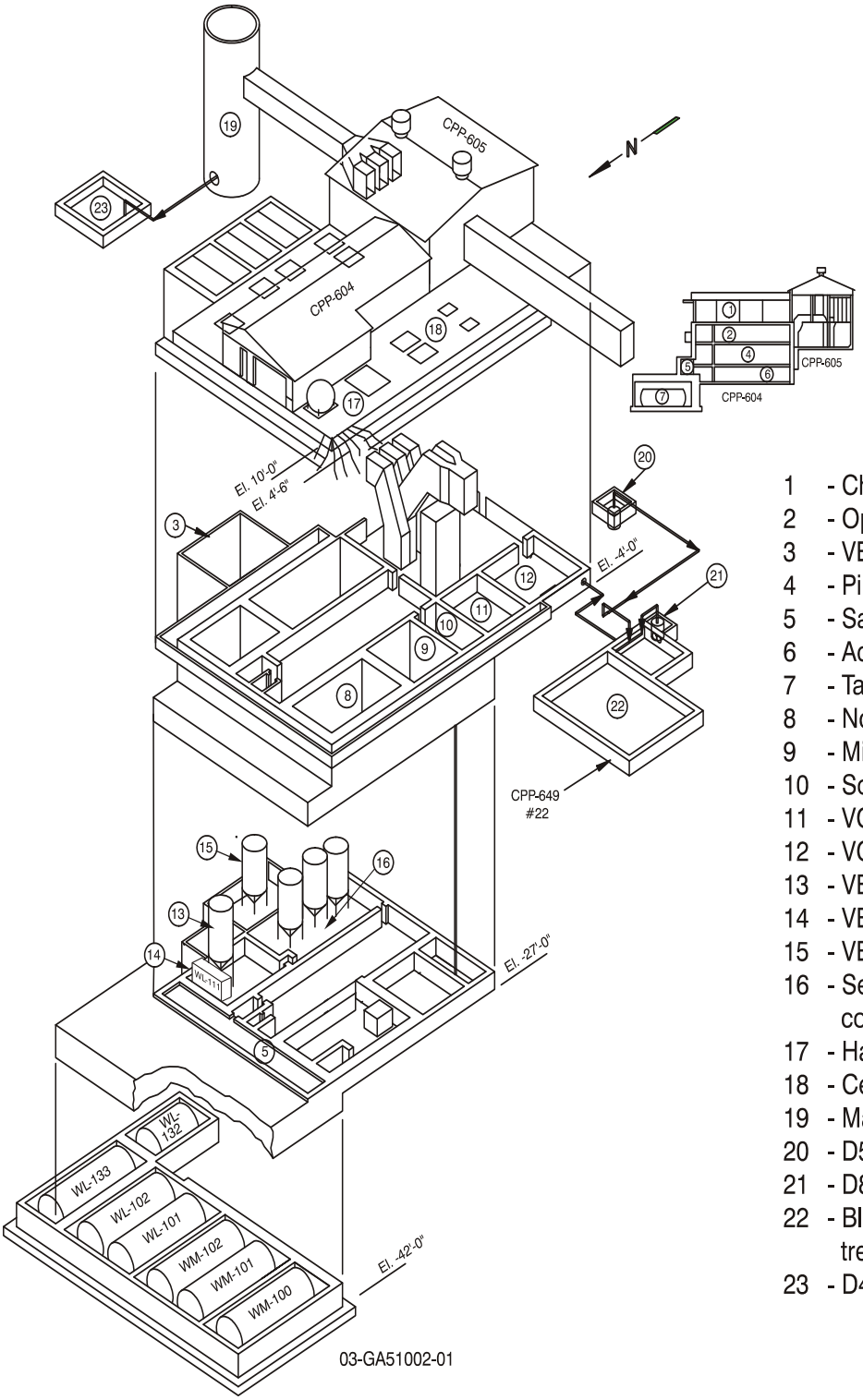

Legend

1 - Chemical Makeup Area
2 - Operating corridor
3 - VES-WL-129 evaporator cell
4 - Pipe corridor
5 - Sample corridor
6 - Access corridor
7 - Tank storage vault
8 - North cell
9 - Middle cell
10 - South cell
11 - VOG filter cell
12 - VOG blower cell
13 - VES-WL-161 Evaporator
14 - VES-WL-111
15 - VES-WL-129 Evaporator
16 - Separation and Condensation collection cell
17 - Hatch access to north cell
18 - Cell hatches
19 - Main exhaust stack
20 - D5 vault
21 - D8 vault
22 - Bldg. 649 process off-gas treatment area
23 - D4 vault

Building CPP-604

Exhibit B-6. Building CPP-604.

Evaporator Feed Collection/Feed Sediment Tank Vaults

The vaults for the Evaporator Feed Collection Tank, VES-WL-133, and the Evaporator Feed Sediment Tank, VES-WL-132, are connected by a doorway in a common wall. A ladder provides access to the VES-WL-133 vault from the VES-WL-132 vault, and a concrete hatch seals the VES-WL-132 vault from the above-grade portion of the building. The VES-WL-133 vault is in the northeast corner of the CPP-604 building. The vault has internal dimensions of 16 ft 6 in. by 42 ft. The VES-WL-132 vault is located just south of the VES-WL-133 vault and has internal dimensions of 16 ft 6 in. by 17 ft. The vault is constructed of reinforced concrete and the floor and lower 2 ft 6 in. of the walls are lined with stainless steel. This information is described in section, D-2f (1)(b), "Requirements for Secondary Containment and Leak Detection."

Evaporator Cells, Process Condensate Collection Cell, and Feed Pump Cell

The two evaporator cells contain the evaporators, EVAP-WL-161 and EVAP-WL-129. The process condensate collection cell contains the Process Condensate Collection Tanks (VES-WL-106, VES-WL-107, and VES-WL-163). The feed pump cell contains the two feed pumps, P-WL-228 and P-WL-229. The cells are all interconnected. Access to these cells is gained through a doorway into the condensate collection cell from the access corridor or by removing the cell hatches. The process condensate collection cell has internal dimensions of 21 ft by 46 ft. The EVAP-WL-161 evaporator cell is located just north of the process condensate collection cell; it has internal dimensions of 18 ft by 22 ft. The EVAP-WL-161 evaporator cell also houses VES-WL-111. The EVAP-WL-129 evaporator cell, located east of the condensate collection cell, has internal dimensions of 14 ft by 15 ft 8 in. The feed pump cell is located just north of the VES-WL-129 evaporator cell and has internal dimensions of 9 ft 2 in. by 14 ft 6 in. Drawings 155069, 155070, and 103171 show typical concrete installation, and Drawings 103180, 158768 and 162748 show the stainless steel liner installation (See Appendix II).

CPP-604 Tank Farm Tanks, VES-WM-100, VES-WM-101, and VES-WM-102 Vaults

The TFT system tanks are located in two connected and below-grade vaults at the north end of CPP-604.

The west vault, containing VES-WM-100, is constructed of reinforced concrete and is 17 ft wide, 43 ft long, and 16 ft high. The adjacent vault contains VES-WM-101 and VES-WM-102 and is 30 ft 6 in. by 43 ft by 16 ft high. The floors and lower 3 ft 6 in. of the walls in both vaults are lined with stainless steel. Drawing 400815 in the drawing package (Appendix II) included with the permit represents the space occupancy floor plan for the CPP-604 building. Drawing 103171 shows the typical concrete and

stainless steel liner installations (See Appendix II). Drawing 103544 shows the typical stainless steel floor and wall lining details for VES-WM-100 vault and VES-WM-101 and -102 vault (See Appendix II). Drawing 103530 shows the foundation and enclosure plans, sections, and details for the VES-WM-100 vault and the VES-WM-101/VES-WM-102 vault (See Appendix II).

Bottoms Tank (VES-WL-101) and Feed Collection Tank (VES-WL-102) Vault

The vault contains VES-WL-101 and VES-WL-102 and is constructed of reinforced concrete that ranges in thickness from 2 to 4 feet. This vault is 30 ft wide, 43 ft long, and 16 ft high.

The secondary containment is constructed of concrete floor lined with a Hypalon® membrane (registered trademark of DuPont), which extends three feet up the walls. The main body of the membrane has a 45-mil nominal thickness and is reinforced with denier polyester fabric scrim. Unreinforced membrane that is used for corner reinforcement and around the sump liner insert, which must be molded to fit, is 60-mil nominal thickness. The Hypalon® membrane conforms to the requirements of the National Sanitation Foundation Standard 54 (revised May 1991) Type 3-45, (industrial grade chlorosulfonated polyethylene). All seams in the secondary containment are heat-welded or adhesive bonded to avoid any cracks or gaps. The membrane is sealed around the tank saddles by silicone rubber sealant that is capable of withstanding the expected waste solutions for extended periods of time. Drawing 103530 shows the foundation and enclosure plans, sections, and details, and Drawings 370862, 370863, 370864, 370865, 370866, and 370867 show the liner installations and sections for the VES-WL-101/VES-WL-102 vault (See Appendix II).

Building CPP-1618 LET&D System Storage and Treatment

The LET&D treatment process reduces the volume of liquid waste by fractionating PEWE overhead condensates into saturated steam/offgas and acid fractions. The fractionators separate the waste solution into water (overheads) and nitric acid (bottoms).

Wastes are treated and stored in tanks in CPP-1618. The LET&D system includes tanks and ancillary equipment in the CPP-659 Annex and in CPP-1618. For a detailed description of the LET&D system, see Section D of this permit.

The Liquid Effluent Treatment and Disposal (LET&D) facility is currently used to concentrate nitric acid solutions. Construction of the facility was completed in 1992. System operability tests were completed and waste storage and treatment were started in January 1993.

The LET&D facility is a three-story, steel-frame, metal-sided structure. It has two reinforced concrete process cells. The Acid Fractionator Cells have internal dimensions of 17 ft by 14 ft 6 in. The cell walls are epoxy-coated, and the lower 3 ft of the walls and the floors are lined with stainless steel. The cells contain the Acid Fractionator Waste Feed Head Tank, VES-WLK-197; the acid fractionator units, FRAC-WLL-170 and FRAC-WLK-171; the Bottoms Tank, VES-WLL-195; and associated ancillary equipment. The remaining portions of the three-story structure contain the process offgas system, sample cell, and utility support systems. Drawing 092440 represents the space occupancy floor plan for CPP-1618 (see Appendix B-1 of the original application). Exhibit B-7 shows the equipment arrangement in the first floor plan of the LET&D facility. Drawings 347791, 347796, and 347798 (see Appendix II) illustrate the CPP-1618 concrete and liner details.

LET&D Acid Recycle Tank Building and Acid Head Tank (CPP-659 Annex)

The Acid Recycle Tank, VES-NCR-171, and Acid Head Tank, VES-NCR-173, are located in the CPP-659 Annex adjacent to the New Waste Calcining Facility (NWCF, CPP-659). The CPP-659 Annex is used to house a 22,500 gallon stainless steel tank which stores acid produced by the LET&D fractionation process. VES-NCR-173 is a stainless steel tank, which stores nitric acid prior to being transferred throughout the INTEC for reuse. The tank has capacity of approximately 90 gallons. A sump, 4 ft by 4 ft by 9 ft 9 in., is located in the corner of the annex. The vault has internal dimensions of 17 ft 4 in. by 41 ft 3 in., with a stainless steel wainscot 4 ft 8 in. high. The floor, sump, and walls are lined with stainless steel to a height of 4 ft 8 in., to contain leaks and spills. Drawing 176263 illustrates the CPP-659 Annex concrete and drawing 176265 (see Appendix II) illustrates the stainless steel liner.

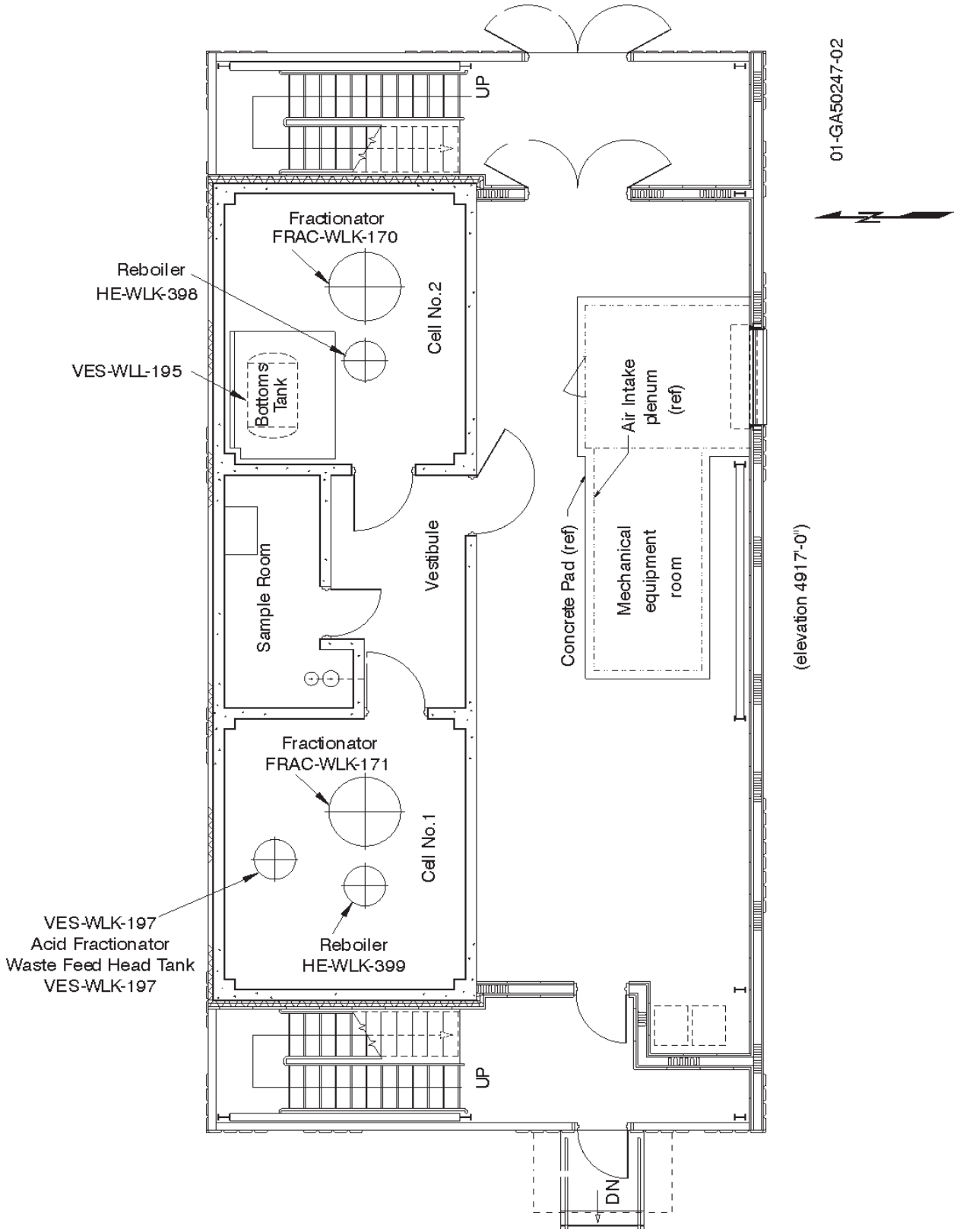

Exhibit B-7. LET&D facility first floor plan.

LET&D Cells and Vaults

LET&D Fractionator Cell 1

Acid Fractionator Cell 1 is 17 ft long and 14 ft 6 in. wide, with a stainless steel liner on the floor and 3-ft up the walls. The cell is constructed of steel-reinforced concrete. The cell has a door in the east wall. In front of the door is a step measuring 3 ft 10 in. by 3 ft 10 in. by 4 in. The floor is sloped toward a sump, which is located slightly to the northeast of the center of the cell. The cell walls are steel-reinforced concrete coated with epoxy.

LET&D Fractionator Cell 2

Acid Fractionator Cell 2 is 17 ft long and 14 ft 6 in. wide. The cell is constructed of steel-reinforced concrete with a stainless-steel liner on the floor and 3-ft up the walls. The cell has a door in the east wall. The floor is sloped toward a sump, which is located in the cell.

The vault containing the Bottoms Tank, VES-WLL-195 is located in northwest corner of Fractionator Cell 2. Although the floor of the fractionator cell does not slope directly to the Bottoms Tank vault, the vault would serve as the containment mechanism if a leak caused the sump to overflow. The vault containing the Bottoms Tank is completely lined with stainless steel. The floor of the Bottoms Tank vault slopes toward the west, where the vault sump is located.

Construction Specifications for CPP-604 and CPP-1618

Building CPP-604 was constructed using the same construction specifications (Specification RC-542). Concrete floors and walls were constructed in accordance with the “Concrete and Reinforced Concrete” section of that specification (included as Appendix B-2 of the original application). Painting was done in accordance with the “Painting” section (included as Appendix B-3 of the original application), and structural steel was fabricated and erected in accordance with the “Structural Steel” section (included as Appendix B-4 of the original application).

These specifications are typical of the specifications used for the construction of the PEWE system. Modifications were performed under very similar specifications, using standards applicable at the time of construction. A sample modification specification for the addition of the spare evaporator, EVAP-WL-129, is provided in Appendix B-7 of the original application.

Appendix II contains applicable structural drawings for the PEWE system. All of the PEWE system vaults are lined with stainless steel, except DVB-OGF-D8, and the VES-WL-101/VES-WL-102 vault. The valve box DVB-OGF-D8 is painted with acid resistant epoxy coating that is compatible with the waste. The VES-WL-101/VES-WL-102 vault is lined with a Hypalon® membrane, which is compatible with the waste being stored/treated. The containment and liners are further discussed in Section D-2f.

Building CPP-659 ETS Treatment and Storage

The ETS reduces the volume of hazardous waste sent to and stored in the INTEC TFF. The ETS evaporates the wastes, producing concentrated wastes (bottoms) and vapor condensates (overheads). The overheads are collected in VES-NCC-122 and transferred to the PEWE for further processing. The bottoms are collected in VES-NCC-119 and sent to the TFF. Other transfer routes are available for VES-NCC-119 and VES-NCC-122 as needed to meet operational requirements.

The ETS includes tanks and ancillary equipment in building CPP-659. For a detailed description of the ETS, see Section D of this permit. Drawing 057807, 057808, and 057812 represents the space occupancy floor plan for CPP-659 (see Appendix II to this permit). An isometric of the building is shown in Exhibit B-8. The cells are shown in the space occupancy floor plan for CPP-659. Drawings 132376 through 132383, 132390 through 132397, and 132444 through 132446 illustrate the CPP-659 concrete details (see Appendix II to this permit). Drawings 132358 through 132359, 132361, 134619 through 134624, and 383716 illustrate the CPP-659 liner details (see Appendix II to this permit).

Blend and Hold Cell

The blend and hold cell (room 215) is used to house the feed tanks for the ETS (VES-NCC-101, VES-NCC-102, VES-NCC-103), the constant head feed tank (VES-NCC-152), and EVAP-NCC-150 (includes VES-NCC-150, HE-NCC-351, HE-NCC-350). The blend and hold cell has a 32 ft 4 in. by 24 ft, floor area and is constructed of steel reinforced concrete with a stainless steel liner and a 3-ft high stainless-steel wainscot. The cells stainless-steel liner system slopes to a floor drain and provides secondary containment to the tanks. The floor drain is equipped with a valve that is normally closed and leak detection in the stainless steel piping that is connected to VES-NCC-119. The stainless steel is compatible with the waste and decontamination solutions received at the ETS.

Offgas Cell

The offgas cell (room 207) houses the Scrub Hold Tank (VES-NCC-108) and the scrub solution-recycle pumps. The offgas cell has a 33 ft 4 in. by 16 ft 3 in. floor area and is constructed of steel reinforced concrete with a stainless steel liner and a 3-ft-high wainscot. A sloped, 1-ft-deep gutter runs along the length of the east wall. The floor drain is equipped with a valve that is normally closed and leak detection in the stainless steel piping that is connected to VES-NCC-119. The stainless steel is compatible with the waste and decontamination solutions received at the ETS.

Adsorber Cell

The adsorber cell (room 206) houses the Vent Condenser Knockout Drum (VES-NCC-136), and the Mist Collector (VES-NCC-116 and associated heat exchangers. The adsorber cell has a 26.5 ft by 31.5 ft floor area constructed of steel reinforced concrete with a stainless steel liner and a 3-ft-high wainscot. The floor has a sump that is drained to VES-NCC-119. The stainless steel is compatible with the waste and decontamination solutions received at the ETS.

Hot Sump Tank Cell

The hot sump tank cell (room 101 and 102), located on the fourth level, house the two hot sump tanks (VES-NCC-119 and VES-NCC-122) and a recirculation pump. The hot sump tank cell is 24 ft 2 in. by 24 ft 6 in. with a height of 17ft 6 in and is constructed of steel reinforced concrete with a stainless steel liner. The valve access room is 19 ft 6 in. by 11 ft 10 in. and is constructed of steel reinforced concrete with a stainless steel liner and a 3-ft-high stainless-steel wainscot. The floor has a sump, which can be jetted to the fluoride hot sump tank. The cell floor is sloped to drain to a gutter on the west side of the cell, and the gutter drains to the south and into the sump.

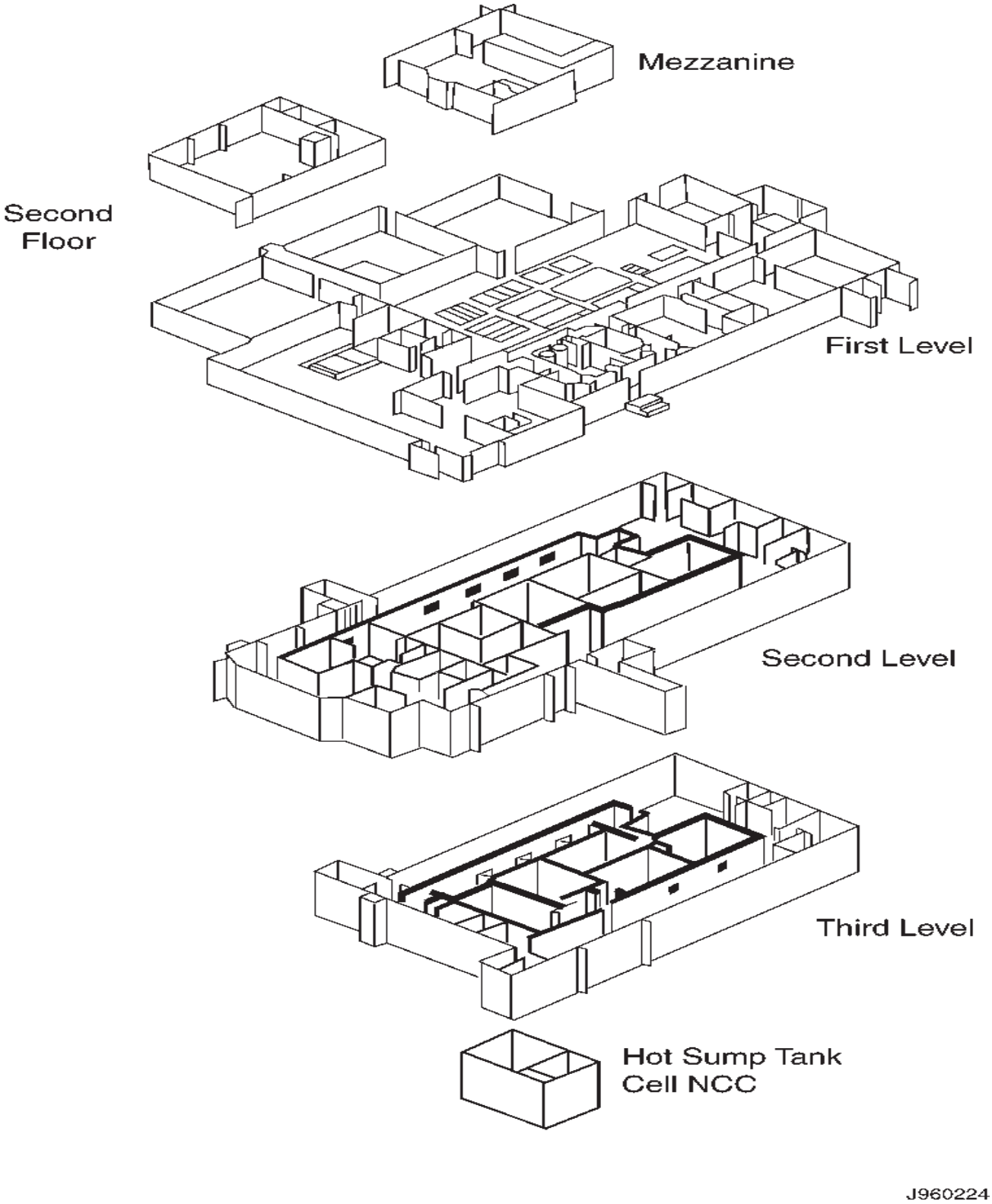

Exhibit B-8. Isometric View of Building CPP-659

Building CPP-1696 IWTU Treatment and Storage

Sodium bearing waste and newly generated liquid waste are transferred to the Waste Feed Tank, and fed to the first steam reformer, the Denitration and Mineralization Reformer (DMR). The DMR, operating in a chemically reducing mode, evaporates liquids, volatilizes trace organics, converts nitrates to nitrogen gas, and converts all nonvolatile constituents of the feed into a sodium carbonate-based, granular, solid treatment product. The reducing condition in the DMR is created by the injection of fluidizing steam, coal, and a small amount of oxygen to react with the coal to produce energy in the bed.

The solid product from the DMR is pneumatically transferred to the Product Receiver/Cooler before being drained from the process.

The process gas from the DMR; consisting mostly of steam, nitrogen, carbon dioxide, and hydrogen, with small amounts of carbon monoxide, nitrogen oxides (NO_x), short-chained organics, and acidic gases; is then filtered through the high temperature Process Gas Filter. This filtration removes the finely divided product solids and carbon fines that elutriate out of the DMR along with the process gas stream. The filtered gas stream is then introduced into the bottom of the second steam reformer, the Carbon Reduction Reformer (CRR). A measured quantity of oxygen/air is also introduced at three locations within the CRR fluidized bed through a set of distributors located at the same level and above the fluidizing process gas input distributors. The CRR, operating in a reducing mode in the bottom of the fluidized bed reduces a significant portion of the residual NOx in the process gas to nitrogen. The CRR operates in an oxidizing mode in the upper section of and above the fluidized bed that oxidizes the hydrogen, carbon monoxide, and organics in the gas stream to carbon dioxide and water. Carbon is required to maintain the CRR in the desired operating temperature range.

The CRR process gas stream, now almost entirely nitrogen, oxygen, water vapor, and carbon dioxide, is cooled in the Offgas Cooler, filtered in the Offgas Filter, passed through high efficiency particulate air (HEPA) filters and a granular activated carbon bed to remove mercury. The final offgas is monitored by a Continuous Emissions Monitoring System (CEMS), combined with HEPA-filtered building ventilation, and discharged to the stack.

Approximately 20 to 50% of the solid products produced in the DMR are elutriated to the Process Gas Filters as fines. The product fines collected in the Process Gas Filter are transferred to one of the Product Receiver/Coolers. Small quantities of solid materials may also be withdrawn from the Offgas Filter and collected in the Product/Receiver Coolers.

The IWTU includes tanks and ancillary equipment located in Building CPP-1696. CPP-1696 is a two-story, steel-frame, metal sided structure, with the exception of the lower 15 ft of the Vault Storage Area, which is constructed of reinforced concrete. The building is 380 ft 6 in. in its longest dimension (north-south) and 197 ft 6 in. in its widest dimension (west-east). The building contains a multi-tiered roof that is 75 ft at its tallest point. The building contains shielded process areas, some non-shielded filtration and air pollution control equipment, a covered link to the Vault Storage Area, and the container storage area itself. There is also a mezzanine adjacent to the process area that houses the Building Ventilation HEPA Filters. For a detailed description of the IWTU, see Section D of this permit. Drawings 632830 and 632831 represent the space occupancy floor plan for CPP-1696 (see Appendix II to this permit). An isometric drawing of the building is shown in Exhibit B-9. The camera locations for CPP-1696 are depicted in Drawing 633652 (see Appendix II to this permit). Drawings 632451, 632452, 632503, 632504, 632512, and 632513 illustrate typical CPP-1696 concrete details (see Appendix II to this permit). Drawings 632483 and 632484 show typical CPP-1696 liner details (see Appendix II to this permit).

IWTU Process Cell

The IWTU Process Cell contains the Waste Feed Tank, DMR, Process Gas Filter, and Offgas Filter. The total floor space is 37 ft 2 in. by 34 ft 5 in. The IWTU Process Cell is constructed of steel reinforced concrete. The floor and lower 2 ft of the walls are lined with stainless steel. The walls above the lined containment are epoxy-coated.

The floor slopes to a collection trough along the north wall of the cell. The trough drains to a sump equipped with leak detection. Upon a sump alarm, the collected liquid is jetted to the Waste Feed Tank, VES-SRC-131, or the NWCF (VES-NCC-101, VES-NCC-102, or VES-NCC-103). Both the stainless-steel liner and the epoxy coating are compatible with the wastes and decontamination solutions managed at the IWTU.

Carbon Reduction Reformer Cell

The CRR cell houses the CRR and Offgas Cooler. The CRR cell has a 19 ft 6 in. by 34 ft 5 in. floor area and is constructed of steel reinforced concrete with a stainless steel liner that extends 1 ft 8 in. up the walls. The walls above the lined containment are epoxy coated. Both the stainless-steel liner and the epoxy coating are compatible with the wastes and decontamination solutions managed at the IWTU.

The floor slopes to a collection trough along the south wall of the cell. The trough drains to a sump equipped with leak detection. Upon a sump alarm, the collected liquid is jetted to the Waste Feed Tank, VES-SRC-131, or the NWCF (VES-NCC-101, VES-NCC-102, or VES-NCC-103). Both the stainless-steel liner and the epoxy coating are compatible with the wastes and decontamination solutions managed at the IWTU.

Canister Filling Cells

The Canister Filling Cells house the Product Receiver/Cooler tanks (above), the tank cooling/filtering loop, and the canister filling and capping stations (below). Each Canister Filling Cell has a 17 ft 6 in. by 23 ft 8 in floor area and is constructed of steel reinforced concrete with a stainless steel liner that extends 1 ft up the walls. The walls above the lined containment are epoxy-coated. The stainless-steel liner and epoxy coating are compatible with the wastes and decontamination solutions managed at the IWTU.

The floor slopes to a collection trough that drains to a sump equipped with leak detection. Upon a sump alarm, the collected liquid is jetted to the Waste Feed Tank, VES-SRC-131, or the NWCF (VES-NCC-101, VES-NCC-102, or VES-NCC-103).

Solids Sample Cell

The Solids Sample Cell contains the sample receiver. The cell has a 4 ft by 8 ft floor area and is constructed of steel reinforced concrete with a stainless steel liner that covers the floor and lower 1 ft of the walls. The walls above the lined containment are epoxy-coated. Both the stainless-steel liner and the epoxy coating are compatible with the wastes and decontamination solutions managed at the IWTU.

The floor slopes to a collection trough that drains to a sump equipped with leak detection. Upon a sump alarm, the collected liquid is jetted to the Waste Feed Tank, VES-SRC-131, or the NWCF (VES-NCC-101, VES-NCC-102, or VES-NCC-103).

Vault Storage Area

The vault storage area houses the storage vaults that contain the filled canisters. The filled canisters are placed in concrete vaults that can accommodate a 4X4 array of canisters. A concrete lid is placed on the vault and the vaults are then moved to the Vault Storage Area. The Vault Storage Area has a 114 ft by 123 ft 6 in. floor area constructed of steel reinforced concrete.

RCRA PERMIT

FOR THE

IDAHO NATIONAL LABORATORY

Volume 14
INTEC Liquid Waste Management System

Attachment 1, Section D
Process Information

Revision Date: September 13, 2011

CONTENTS

ACRONYMS v

D. PROCESS INFORMATION 1

D-1. Containers 36

D-1b Containers Without Free Liquids 37

D-1b(1) Test for Free Liquids 37
D-1b(2) Description of Containers 37
D-1b(3) Container Management Practices 37
D-1b(4) Container Storage Area Drainage 38

D-2 Tank Systems 38

D-2a Existing Tank Systems 38

D-2a(2) Existing Corrosion Practices 38

D-2b New Tank Systems 39

D-2b(1) Assessment of New Tank System's Integrity 40
D-2b(2) External Corrosion Protection 41
D-2b(3) Description of Tank System Installation and Testing Plans and Procedures 41

D-2c Dimensions and Capacity of Each Tank 41

D-2d Description of Feed Systems, Safety Cutoffs, Bypass Systems, and Pressure Controls 53

D-2e Diagrams of Piping, Instrumentation, and Process Flow 69

D-2f Containment and Detection of Releases 74

D-2f(1) Plans and Description of the Design, Construction, and Operation of the Secondary Containment System 74

D-2f(1)(a) Tank Age Determination 74
D-2f(1)(b) Requirements for Secondary Containment and Leak Detection 74

D-2g Controls and Practices to Prevent Spills and Overflows 93

D-8. Miscellaneous Units 96

D-8a. Description of Miscellaneous Units 96

D-8b Environmental Performance Standards for Miscellaneous Units 97

D-8b(1) Miscellaneous Unit Wastes 100

D-8b(2) Containment System 100
D-8b(3) Site Air Conditions....100
D-8b(4) Prevention of Air Emissions....100
D-8b(5) Operating Standards 101
D-8b(6) Site Hydrogeologic Conditions 106
D-8b(7) Site Precipitation 106
D-8b(8) Groundwater Usage....107
D-8b(9) Surface Waters and Surface Soils 107
D-8b(10) Area Land Use....107
D-8b(11) Migration of Waste Constituents....107
D-8b(12) Evaluation of Risk to Human Health and the Environment 107

EXHIBITS

Exhibit D-1. PEWE System flow diagram and inputs....12

Exhibit D-2. LET&D System flow diagram....15

Exhibit D-3. ETS Flow Diagram....18

Exhibit D-4. ETS Inputs....19

TABLES

Table D-1. PEWE Tanks. 42

Table D-2. LET&D Tanks....46

Table D-3. ETS Tanks....47

Table D-4. IWTU Tanks....50

Table D-5. Tank Inputs & Outputs....53

Table D-6. IWTU Pressure Relief Valves 69

Table D-7. List of ILWMS System Diagrams....71

Table D-8. Instrument Table 108

APPENDICES

Appendix D-1. Feed Pump P-SRC-231 Equipment Data Sheet IWTU

Appendix D-2. Sintered Metal Filter Elements - Equipment Data Sheets

Appendix D-3. GAC Bed Adsorbers Breakthrough Calculations

Appendix D-4. Warm-up and Initiation of Feed to the IWTU

Appendix D-5. IWTU Commissioning, Transition, and Readiness Plan, PLN-2020, Rev. 10, Effective Date: 03/03/11

System Plan for the Treatment of INTEC Sodium-Bearing Waste Using the Steam Reforming Process, PLN-2019, Rev 5, Effective Date: 05/11/11

Appendix D-6. Risk Assessment for Air Emissions from the Integrated Waste Treatment Unit and INTEC Liquid Waste Management System

ACRONYMS

AE	Architectural Engineer
API	American Petroleum Institute
APS	Atmospheric Protection System
ASME	American Society of Mechanical Engineers
CFR	Code of Federal Regulations
COPC	compounds of potential concern
CPP	Chemical Processing Plant
CRR	Carbon Reduction Reformer
DCS	Distributed Control System
DEQ	Department of Environmental Quality
DMR	Denitration and Mineralization Reformer
EPA	Environmental Protection Agency
ETS	Evaporator Tank System
gpm	gallons per minute
HEPA	high efficiency particulate air
HLLWE	High Level Liquid Waste Evaporator
HWMA	Hazardous Waste Management Act
IDAPA	Idaho Administrative Procedures Act
INEEL	Idaho National Engineering and Environmental Laboratory
INL	Idaho National Laboratory
INTEC	Idaho Nuclear Technology and Engineering Center
IWTU	Integrated Waste Treatment Unit
ILWMS	INTEC Liquid Waste Management System
LET&D	Liquid Effluent Treatment and Disposal (facility)
LRA	level recorder alarm

NGLW	newly generated liquid waste
NWCF	New Waste Calcining Facility
PE	professional engineer
PEWE	Process Equipment Waste Evaporator
P&ID	piping and instrumentation diagram
POG	process offgas
PWL	process waste liquid
RCRA	Resource Conservation and Recovery Act
RH	remote-handled (waste)
RSS	Rapid Shutdown System
SBW	Sodium Bearing Waste
SLRA	Screening Level Risk Assessment
TFF	Tank Farm Facility
TFT	Tank Farm Tank
TOC	Total Organic Carbon
TRU	Transuranic
VOG	vessel offgas
WAC	waste acceptance criteria
WC	water column

SECTION D. PROCESS INFORMATION

As defined under the Resource Conservation and Recovery Act (RCRA), the Idaho Hazardous Waste Management Act (HWMA), the Code of Federal Regulations (CFR), and the Idaho Administrative Procedures Act (IDAPA), there are four process codes associated with the regulated hazardous waste management units in the Idaho Nuclear Technology and Engineering Center (INTEC) Liquid Waste Management System (ILWMS). The process codes are S01, container storage; S02, tank storage; T01, tank treatment; and X99, other miscellaneous treatment.

The system consists of the Process Equipment Waste Evaporator (PEWE) system, the Liquid Effluent Treatment and Disposal (LET&D) facility, the Evaporator Tank System (ETS), and the Integrated Waste Treatment Unit (IWTU). The system includes tanks and ancillary equipment in Buildings CPP-604, CPP-649, CPP-659, CPP-1618, CPP-1696, and associated tank farm valve boxes (e.g., C-37, A-7, B-1, B-4, B-5, B-6, B-9, B-10, B-11) at the INTEC. The equipment associated with these units is addressed separately within this permit. The PEWE system is discussed first, then the LET&D, the ETS, and finally the IWTU. The regulated tanks and ancillary equipment specific to the PEWE system are listed below:

- VES-WL-132, CPP-604 Evaporator Feed Sediment Tank (regulated under IDAPA as a storage/treatment tank)
- VES-WL-133, CPP-604 Evaporator Feed Collection Tank (regulated under IDAPA as a storage/treatment tank)
- VES-WL-102, CPP-604 Surge Tank for VES-WL-133 (regulated under IDAPA as a storage/treatment tank)
- VES-WL-109, CPP-604 Evaporator Head Tank (regulated under IDAPA as a storage tank)
- EVAP-WL-129, CPP-604 Evaporator Unit, including VES-WL-129, VES-WL-130, HE-WL-307, and HE-WL-308 (regulated under IDAPA as a miscellaneous unit with treatment/storage tanks)
- VES-WL-134, CPP-604 Process Condensate Surge Tank (regulated under IDAPA as a storage tank)
- EVAP-WL-161, CPP-604 Evaporator Unit, including VES-WL-161, VES-WL-162, HE-WL-300, and HE-WL-301 (regulated under IDAPA as a miscellaneous unit with treatment/storage tanks)

- VES-WL-131, CPP-604 Process Condensate Surge Tank (regulated under IDAPA as a storage tank)
- VES-WL-108, CPP-604 Process Offgas Condensate Knock-Out Pot (regulated under IDAPA as a storage tank)
- VES-WL-111, CPP-604 Bottoms Collection Tank (regulated under IDAPA as a storage/treatment tank)
- VES-WL-101, CPP-604 Bottoms Collection Tank (regulated under IDAPA as a storage/treatment tank)
- VES-WM-100, VES-WM-101, and VES-WM-102, CPP-604 Tank Farm Tanks (regulated under IDAPA as storage/treatment tanks)
- VES-WL-135 (DVB-OGF-D5), VES-WL-136 (DVB-OGF-D8) VES-WL-137 (CPP-649), VES-WL-138, VES-WL-139, VES-WL-142, VES-WL-144 and VES-WL-150 (CPP-604), Process Waste Liquid System (regulated under IDAPA as storage tanks)
- VES-WL-106, VES-WL-107, and VES-WL-163, CPP-604 Process Condensate Collection Tanks (regulated under IDAPA as treatment/storage tanks).

Functional descriptions of the regulated tanks and ancillary equipment specific to the PEWE system are listed below:

VES-WL-132, Evaporator Feed Sediment Tank

VES-WL-132 functions as a settling basin for solids that would otherwise settle out in the Evaporator Feed Collection Tank, VES-WL-133. When the waste stream enters VES-WL-132, it encounters a baffle-and-weir system. The solids settle out of the solution as it flows under the baffle and over the weir.

VES-WL-133, Evaporator Feed Collection Tank

VES-WL-133 serves both evaporators, EVAP-WL-129 and EVAP-WL-161, and receives wastes from various sources. Wastes are transferred from VES-WL-133 to either the Evaporator Head Tank, VES-WL-109, or directly to EVAP-WL-129.

VES-WL-102, Surge Tank for VES-WL-133

The original function of this tank was as a feed collection tank for the PEWE system. The PEWE system was upgraded, and VES-WL-133 now serves as the evaporator feed collection tank. The current function of this tank is to provide surge capacity for VES-WL-133. It is also possible to feed the evaporators from this tank.

VES-WL-109, Evaporator Head Tank

The function of this tank is to provide a constant head for feed solution for EVAP-WL-161. Feed is pumped to this tank from the Evaporator Feed Collection Tanks, VES-WL-102 or VES-WL-133. The Evaporator Head Tank has an overflow that returns to VES-WL-102 or VES-WL-133.

EVAP-WL-129, Evaporator Unit (includes VES-WL-129, VES-WL-130, HE-WL-307 and HE-WL-308)

The function of the evaporator is to reduce the volume of waste sent to the INTEC Tank Farm Facility (TFF). The evaporator is composed of a flash column, VES-WL-129, a mist eliminator, VES-WL-130, a reboiler, HE-WL-307, and a condenser, HE-WL-308. The feed pumps draw waste from the Evaporator Feed Collection Tank, VES-WL-133, and transfer the waste to the evaporator. The evaporator uses steam to heat the solution in reboiler HE-WL-307. The solution is circulated from the reboiler through the flash column, where the liquid flashes and vapor is separated from the liquid. Liquid drops to the bottom of the flash column and is recycled back to HE-WL-307. Constituents of the waste that have a lower boiling point than the system temperature flash and produce vapor. The constituents with a higher boiling point remain liquid and are re-circulated through the evaporator.

The vapor rises in the flash column, passes a baffle and then passes through a coarse wire mesh to remove entrained liquid droplets from the vapor. The vapor then enters the mist eliminator, VES-WL-130, which contains a fine wire mesh to remove additional entrained liquid droplets (light constituents and water). The remaining vapors from the evaporator flow to condenser HE-WL-308. The condensates from HE-WL-308 are normally drained to VES-WL-131, the Process Condensate Surge Tank. The condensates can alternately be drained to VES-WL-134, the Process Condensate Surge Tank. The remaining non-condensable vapor is routed to the Vessel Offgas (VOG) system.

When the level in the Process Condensate Surge Tank, VES-WL-131, reaches a preset level, the liquid is transferred to one of the Process Condensate Collection Tanks (VES-WL-106, VES-WL-107, or VES-WL-163).

VES-WL-134, Process Condensate Surge Tank

VES-WL-134 collects condensate from the evaporator. VES-WL-134 provides the capability for the evaporators to be operated in series. For series operation, EVAP-WL-129 is operated until VES-WL-134 is full. The tank provides feed for EVAP-WL-161.

Future plans for this tank are to store nitric acid recovered from the LET&D process via VES-WLL-195 to allow more efficient operation of the process.

EVAP-WL-161, Evaporator Unit (includes VES-WL-161, VES-WL-162, HE-WL-300 and HE-WL-301)

The EVAP-WL-161 is similar to EVAP-WL-129 in both design and operation. A difference is that EVAP-WL-161 is fed from an Evaporator Head Tank, VES-WL-109, rather than receiving feed directly from the feed pumps. The feed pumps draw waste from the Evaporator Feed Collection Tank, VES-WL-133, and transfer the waste to VES-WL-109. The evaporator is fed by gravity from VES-WL-109. The evaporator is composed of a flash column, VES-WL-161, a separator, VES-WL-162, a reboiler, HE-WL-300, and a condenser, HE-WL-301.

The evaporator uses steam to heat the solution in reboiler HE-WL-300. The solution is circulated from the reboiler through the flash column, where the liquid flashes and vapor is separated from the liquid. Liquid drops to the bottom of the flash column and is recycled back to HE-WL-300. Constituents of the waste that have a lower boiling point than the system temperature flash and produce vapor. The constituents with a higher boiling point remain liquid and are re-circulated through the evaporator.

The vapor rises in the flash column, passes a baffle and then passes through a coarse wire mesh to remove entrained liquid droplets from the vapor. The vapor then enters the separator (mist eliminator), VES-WL-162, which contains a fine wire mesh to remove additional entrained liquid droplets (light constituents and water). The remaining vapors from the evaporator flow to condenser HE-WL-301. The condensates are normally drained to VES-WL-131, the Process Condensate Surge Tank. The remaining non-condensable vapor is routed to the VOG system.

When the level in VES-WL-131 reaches a preset level, the liquid is transferred to one of the Process Condensate Collection Tanks (VES-WL-106, VES-WL-107, or VES-WL-163).

VES-WL-131, Process Condensate Surge Tank

VES-WL-131 collects condensate from the evaporator. When the tank reaches a preset level, the contents are transferred to one of the Process Condensate Collection Tanks (VES-WL-106, VES-WL-107, or VES-WL-163). A heel of approximately 20 percent is maintained in the tank to protect the pumps.

VES-WL-108, Process Condensate Knock-Out Pot

The function of the Process Condensate Knock-Out Pot is to remove and collect condensed liquid from the evaporator VOG before the offgas is released to the plant VOG.

VES-WL-101 and VES-WL-111, Bottoms Collection Tanks

VES-WL-101 and VES-WL-111 are collection points for waste to be transferred from the PEWE system, TFF, or other facilities. These tanks collect, store, and/or treat the PEWE system concentrated bottoms.

VES-WM-100, VES-WM-101, and VES-WM-102, CPP-604 Tank Farm Tanks (TFT)

VES-WM-100, VES-WM-101, and VES-WM-102 are collection points for waste to be transferred to the PEWE system. These tanks can be used as surge capacity for the PEWE feed storage/treatment or for the storage/treatment of PEWE bottoms.

VES-WL-135, VES-WL-136, VES-WL-137, VES-WL-138, VES-WL-139, VES-WL-142, VES-WL-144, and VES-WL-150, Process Waste Liquid (PWL) Tanks and Sumps

The PWL system collects hazardous waste liquid from CPP-604, CPP-649, and associated valve boxes and transfers the waste to the PEWE system.

The PWL tanks and sumps are located in CPP-604, CPP-649, and associated valve boxes. The purpose of the system is to collect offgas condensate and liquid from floor drains and transfer the waste to the PEWE Evaporator Feed Collection Tank, VES-WL-133. The system is comprised of tanks VES-WL-135, -136, -137, -138, -139, -142, -144, -150, and various cell sumps. VES-WL-150 collects liquids from the floor drains and the other tanks collect offgas condensate. A sump or vault secondarily contains each of the tanks.

Sumps SU-WL-140, -143, -145, -146, -147 and -148 do not contain PWL tanks. Sumps SU-WL-140 and SU-WL-143 are located in the Rare Gas Plant in CPP-604. Since the Rare Gas Plant is no longer active there are no sources of waste that would be collected in either sump. Sump SU-WL-148 is located

at the INTEC main stack. In the event of equipment failure, condensate from the main stack could collect in this sump. These sumps are emergency equipment and do not routinely collect waste; therefore, the sumps are exempt from requiring secondary containment. Sumps SU-WL-145, SU-WL-146, and SU-WL-147 are part of the secondary containment and leak detection system for the PEWE Condensate Collection Cell and PEWE EVAP-WL-161 Cell. As such, these sumps do not require the emergency structure exemption set forth in IDAPA 58.01.05.008 [40 CFR §264.1(g)(8)(i)].

The tanks and sumps are jetted upon high level detection. All are transferred into a common header and then transferred into VES-WL-133, except VES-WL-150, which is transferred into the Evaporator Feed Sediment Tank, VES-WL-132, which is a settling tank. The settling tank drains directly into VES-WL-133.

VES-WL-106, VES-WL-107, and VES-WL-163, CPP-604 Process Condensate Collection Tanks

The Process Condensate Collection Tanks (VES-WL-106, VES-WL-107, and VES-WL-163) collect the evaporator vapor condensate (overheads) from the PEWE process.

Tank Farm Valve Boxes

The reinforced concrete diversion valve boxes are buried underground in the TFF. Access to the diversion valve boxes is provided for inspection, repair, or upgrade to the valves, transfer lines, and associated equipment. Diversion valve boxes with radioactive waste transfer lines are equipped with stainless steel liners which extend 30 to 60 centimeters (12 to 24 inches) up the walls.

Diversion valve boxes with radioactive waste transfer lines are equipped with sumps for the collection of wastes that may leak from the line into its encasement or valves. The remaining diversion valve boxes are equipped with drains that discharge to diversion valve boxes equipped with sumps.

Leak detection systems are installed in the active diversion valve boxes. These systems consist of radiation monitors designed to detect changes in radiation levels, liquid level detection instrumentation, or cameras. For the radiation monitors, a background radiation level is determined at the time of the calibration and alarms are set accordingly. An alarm indicates a possible leak into the sump of a diversion valve box.

During grouting of the VES-WM-181 vault to support TFF closure activities, grout was inadvertently introduced into valve boxes DVB-WM-PW-B4, DVB-WM-PW-B5, and DVB-WM-PW-B9. The operability of the radiation monitors, level instrumentation, sumps, and jets in these valve boxes

became questionable when the grout was inadvertently introduced. Leak detection cameras have been installed in valve boxes DVB-WM-PW-B4, DVB-WM-PW-B5, and DVB-WM-PW-B9 to replace the level instrumentation. New liquid level detection instrumentation was also installed in DVB-WM-PW-B9. Likewise, a sump pump has been installed in valve box DVB-WM-PW-B9 to provide a means to remove any potential liquid accumulation in the valve box (both DVB-WM-PW-B4 and DVB-WM-PW-B5 gravity drain to DVB-WM-PW-B9).

Any liquid that might leak into either DVB-WM-PW-B4 or DVB-WM-PW-B5 would immediately gravity drain to DVB-WM-PW-B9; therefore only DVB-WM-PW-B9 is inspected on a daily basis for leaks (INTEC-8185, RCRA Tank Farm Daily Inspections and Process Monitoring Sheet). However, during waste transfers through these valve boxes, all three are monitored continuously for leaks using the leak detection cameras.

PEWE System Operation

The PEWE system reduces the volume of hazardous wastes sent to the TFF. The PEWE system evaporates the wastes, producing concentrated wastes (bottoms) and vapor condensates (overheads). The overheads are transferred to the LET&D facility for further processing. Bottoms generated from the PEWE go to VES-WL-101 or VES-WL-111. Solutions may be transferred back to VES-WL-133 and blended with other wastes for further evaporation when appropriate concentration of the waste has not been achieved (i.e., all available feed solutions have been processed, loss of utilities, etc.). Returning the waste to VES-WL-133 reduces the volume of waste being transferred to the TFF.

The evaporator is operated on a semi-continuous basis. While the evaporator is operating, feed is added to the evaporator to keep the liquid in the operating evaporator at a preset level. Feed is continuously added to make up for the liquid that is boiled off. The evaporator operates as a thermal siphon. Bubbles form and rise in the tubes as waste is boiled in the reboiler. This produces a motive force that pulls liquid from the evaporator into the reboiler tubes. The rising bubbles flow to the flash column from the reboiler. At a predetermined level, based on density or temperature, the evaporator is shut down and the evaporator contents (bottoms) are transferred to either VES-WL-101 or VES-WL-111 or are recycled back to VES-WL-133 for further processing. From VES-WL-101 or VES-WL-111, the bottoms can be sent to the CPP-604 TFTs, (VES-WM-100, VES-WM-101, and VES-WM-102), to the TFF, or to the ETS. The overheads are sent to the LET&D for further processing. All of these tanks were designed and constructed to contain the types of solutions stored. The P.E. certifications for these units

attest that the tank systems are adequately designed and are compatible with the waste(s) to be stored or treated in accordance with IDAPA 58.01.05.008 [40 CFR § 264.192(a)].

As described above, there may be instances where complete concentration of the waste feed does not occur. When this happens, the remaining feed may be blended with other wastes and reintroduced to the ILWMS. Depending on the characteristics of the new feed solution (e.g., high chlorides, fluorides, or radionuclide concentration), it may be appropriate to route the mixture to the ETS for processing, rather than the PEWE, to ensure optimum treatment and protection of equipment.

With the addition of the C-40 valve box, the PEWE bottoms (from both VES-WL-101 and VES-WL-111) can be transferred to the ETS, TFF, and the CPP-604 TFT. From the CPP-604 TFT, waste can be transferred to the TFF, the ETS, or the PEWE. The transfer lines are encased in stainless steel and equipped with leak detection. Drawings showing transfer routes are included in the Section D Plant Drawing package for the permit, Appendix III.

Occasionally, PEWE process condensate does not meet the feed limits or operational constraints (e.g., fluorides, TOC, radionuclide concentration) established for the LET&D facility, as identified in Attachment 1, Section D-8b(5) of the Part B Permit. In these instances, the condensate is routed back to the evaporator feed tank and blended with other solutions for further processing.

The temperature of the evaporator liquid is controlled below 110° C. At much higher temperatures unstable chemical compounds can form. The temperature limit is further discussed in Attachment 1, Section D-2d of this permit.

The density of the waste in the evaporator is controlled to reduce the possibility that the heat exchanger tubes will scale up and eventually plug and to maintain heat transfer efficiencies. A solution density > 1.3 indicates the possibility of large quantities of dissolved solids. At very high densities, the amount of dissolved solids could exceed the solubility of certain species in the solution. Dissolved solids (especially silicates, carbonates, and phosphates) form solid precipitates if the solution has too many dissolved solids. The precipitates can form in the heat exchanger tubes, where the waste is most concentrated, and coat the tubes with a thin layer of solids (scale). Over time, the scale will increase in thickness as more precipitates form. Eventually the scale can become so thick that it reduces heat transfer and evaporator efficiency and may even plug the heat exchanger tubes. One method to help prevent formation of scale is to control (limit) the solution density (specific gravity). When the solution in the evaporator approaches a specific gravity of approximately 1.2 to 1.3, the feed is shut off. The waste is further concentrated to a specific gravity of approximately 1.3 and drained to the Bottoms Collection

Tanks, VES-WL-101 and VES-WL-111. From the Bottoms Collection Tanks, the waste can be transferred for storage or further treatment.

Feed flowing to the Evaporator Feed Collection Tank, VES-WL-133, may first pass through the Feed Sediment Tank, VES-WL-132, to allow potential solids to settle out of the stream. When the waste stream enters VES-WL-132, it encounters a baffle and weir system, which allows time for solids to settle out of the solution as the fluid flows under the baffle and over the weir. The waste is accumulated in the Evaporator Feed Collection Tank, VES-WL-133, before being fed to one of two evaporator units, EVAP-WL-129 or EVAP-WL-161. EVAP-WL-161 receives feed from the Evaporator Head Tank, VES-WL-109, and EVAP-WL-129 receives feed directly from the Evaporator Feed Collection Tank, VES-WL-133.

Normally, one evaporator is operated at a time. However, the system was designed so that the evaporators could be operated simultaneously (in series or parallel). The liquid waste is fed to the operating evaporator continuously, until the concentrated liquid reaches a procedurally designated specific gravity or temperature in the PEWE as previously discussed. The evaporators are shut down upon reaching one of the set points.

Other factors that could result in the PEWE being shut down are a lack of feed to the evaporators or a lack of available storage space in the Process Condensate Collection Tanks (VES-WL-106, VES-WL-107, and VES-WL-163). The remaining material in the flash column (bottoms) is concentrated and drained to one of the Bottoms Collection Tanks, VES-WL-101 or VES-WL-111, for temporary storage/treatment or recycled back through VES-WL-133. Sample analysis determines if the total organic carbon (TOC) limit may exceed LET&D processing parameters and therefore would be routed back to the Evaporator Feed Tank, VES-WL-133, and blended with other solutions for further treatment. From VES-WL-101 or VES-WL-111 the waste may be transferred to the TFF. The liquid may be left in the evaporators until more feed is made available to continue evaporator operation.

When an evaporator is operating, liquid waste enters the flash column of the evaporator and circulates through the reboiler, where it is boiled in the operating reboiler, HE-WL-307 or HE-WL-300. The boiling waste (liquid/vapor phase) then flows into the flash column, where the liquid phase separates from the vapor phase and drops into the flash column. The liquid phase mixes with liquid waste in the flash column and is re-circulated through the reboiler.

The vapor rises in the flash column, passes a baffle, and then passes through a coarse wire mesh to remove entrained liquid droplets before exiting the flash column. The vapor then enters the mist

eliminator, VES-WL-130 or VES-WL-162, which contains a fine wire mesh to further remove entrained liquid droplets. The vapors from the evaporator flow from the wire mesh to a condenser, HE-WL-308 or HE-WL-301, and the condensates drain to the Condensate Surge Tank, VES-WL-131.

When the liquid level in the surge tank reaches a preset level, the liquid is transferred by one of two pumps, to the Process Condensate Collection Tanks (VES-WL-106, VES-WL-107 and VES-WL-163). From the Process Condensate Collection Tanks, the waste is pumped to the Acid Fractionator Waste Feed Head Tank, VES-WLK-197. The waste in VES-WLK-197 is fed by gravity to the LET&D fractionators. Aluminum nitrate may be added in the condensate collection tanks to complex the fluorides to reduce corrosion in the downstream LET&D equipment. When one of the Process Condensate Collection Tanks becomes full, process samples are taken as described in Attachment 2, Section C of this permit. Depending on the results of this analysis, the contents are either routed to the LET&D facility for further processing or are returned to the Evaporator Feed Tank for re-evaporation.

When the evaporators are operated in series, waste is first concentrated in EVAP-WL-129. Condensate from this evaporator is collected in the Condensate Surge Tank, VES-WL-134, which is used for series operation. The condensate in VES-WL-134 is then used as feed for EVAP-WL-161. The condensate from evaporator VES-WL-161 is transferred to the Process Condensate Collection Tanks, via Condensate Surge Tank VES-WL-131.

The evaporators are equipped to allow demineralized water to be injected into the system during a run. The demineralized water is injected while the system is operated. This allows the system to strip acid into the condensate (overheads) more efficiently.

A process flow diagram for the PEWE system is presented in Exhibit D-1. The direct primary hazardous waste sources to the PEWE system are also shown in Exhibit D-1. In addition, the process flow for the PEWE system is represented on Piping and Instrumentation Diagram (P&ID) No. 096156 and 094276 (Sheets 1 – 4) in the diagram package (Appendix III) included with this permit.

CPP-604 Tank Farm Tanks (TFT)

The CPP-604 TFT system can receive wastes for temporary storage before they are transferred to PEWE feed tanks, the TFF, or the ETS, also known as the High Level Liquid Waste Evaporator (HLLWE), located in the New Waste Calcining Facility (NWCF). The CPP-604 TFT system includes VES-WM-100, VES-WM-101, and VES-WM-102. The process flow for the CPP-604 TFT system is

represented on P&ID No. 057498 in Appendix III of this permit. VES-WM-100 receives the incoming waste.

VES-WM-100, VES-WM-101, and VES-WM-102 are also each equipped with a transfer jet that transfers waste from the CPP-604 TFT system to the PEWE, the ETS, and TFF, or back to the TFTs.

The jet, JET-WM-503, in VES-WM-100 has been isolated to prevent transfers to VES-WM-102, a jet in VES-WM-102 transfers solution to VES-WM-101, and the jet, JET-WM-504, in VES-WM-101 has been isolated to prevent transfers solution to VES-WM-100.

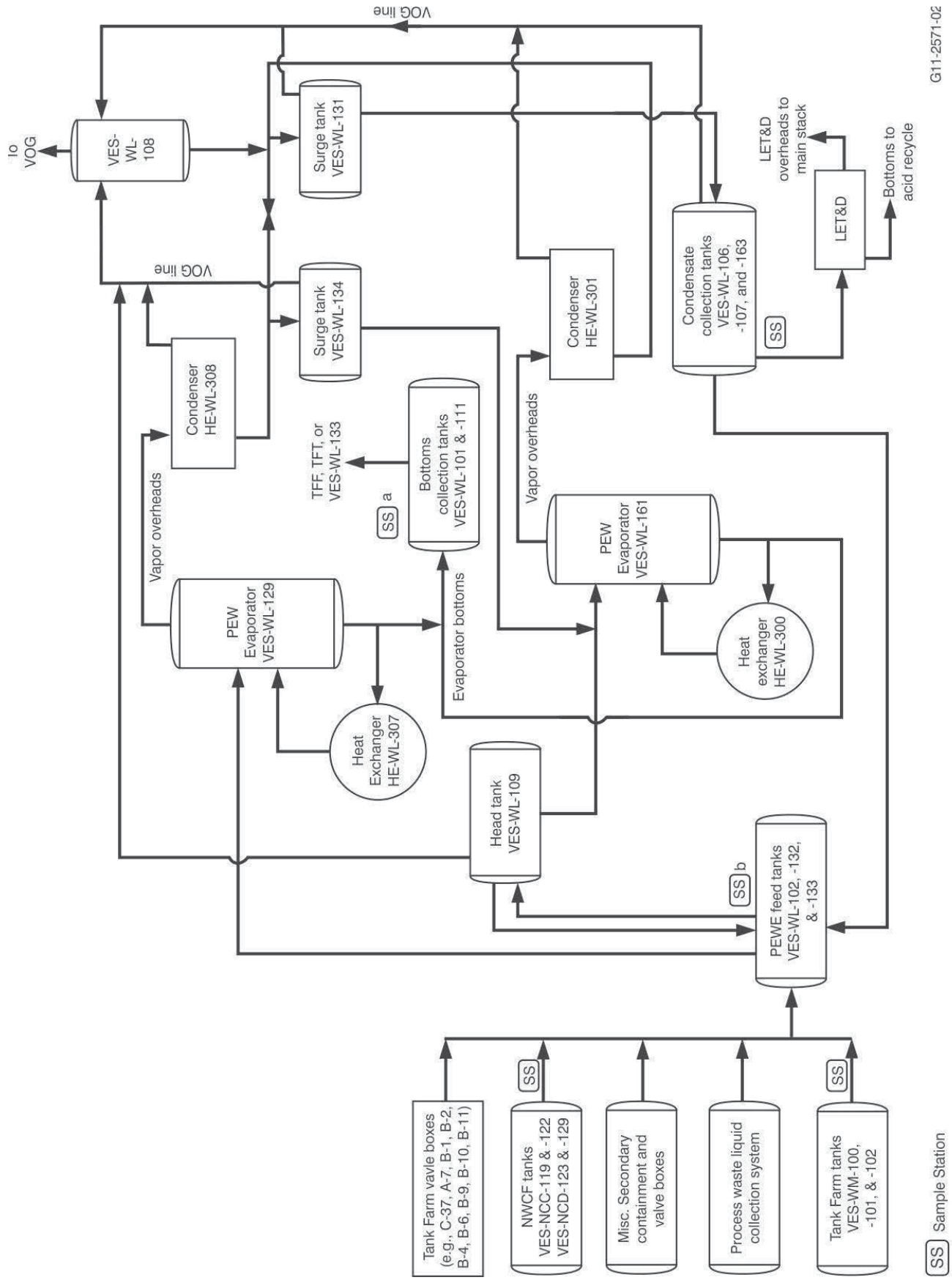

Exhibit D-1. PEWE System flow diagram and inputs.

CPP-1618 Liquid Effluent Treatment and Disposal Facility

The LET&D is part of the liquid waste treatment system at the INTEC. The LET&D system equipment functions very similarly to the PEWE system equipment. The LET&D processes the PEWE overhead condensate waste stream to recover nitric acid. Exhibit D-2 schematically shows the tanks and equipment that are included in the LET&D system. The regulated tanks and ancillary equipment specific to the LET&D system are listed below:

- VES-WLK-197, CPP-1618 Acid Fractionator Waste Feed Head Tank (regulated under IDAPA as a storage tank)
- FRAC-WLL-170, CPP-1618 Acid Fractionator, including FRAC-WLL-170, HE-WLL-391, HE-WLL-396, HE-WLL-398, and VES-WLL-198 (regulated under IDAPA as a miscellaneous unit with treatment/storage tanks)
- FRAC-WLK-171, CPP-1618 Acid Fractionator, including FRAC-WLK-171, HE-WLK-392, HE-WLK-397, HE-WLK-399, and VES-WLK-199 (regulated under IDAPA as a miscellaneous unit with treatment/storage tanks)
- VES-WLL-195, CPP-1618 Acid Fractionator Bottoms Tank (regulated under IDAPA as a storage tank)
- VES-NCR-171, CPP-659 Annex LET&D Nitric Acid Recycle Tank (regulated under IDAPA as a storage tank)
- VES-NCR-173, CPP-659 Annex Nitric Acid Head Tank (regulated under IDAPA as a storage tank).

Acid Fractionators System and Process

The LET&D treatment process reduces the volume of liquid waste by fractionating PEWE overhead condensates into saturated steam/offgas and acid fractions. The fractionators separate the waste solution into water (overheads) and nitric acid (bottoms). Normally, only one fractionator operates at a time.

The feed is transferred from the Process Condensate Collection Tanks to the Acid Fractionator Waste Feed Head Tank (VES-WLK-197) in Cell 1 of the LET&D. The waste is gravity fed to the fractionators, FRAC-WLL-170 or FRAC-WLK-171, via the Acid Fractionator Waste Feed Head Tank.

The feed is heated to its boiling point by introducing steam to the reboilers, HE-WLL-398 or HE-WLK-399. The vapors from the boiling liquid rise through several stacked sieve trays in VES-WLL-170 or VES-WLK-171. The sieve trays (perforated plates) installed in the fractionator column mix the

vapors and liquid. As the descending liquid cools the rising vapor, the nitric acid condenses and remains in solution on the trays, and flows to the bottom of the fractionator.

The bottoms retain approximately 99% of the acid contained in the feed. The density is controlled to produce an approximately 12 Molar nitric acid. When the density setpoint (specific gravity of approximately 1.2 to 1.3) of the nitric acid in the fractionator bottoms is reached, a portion of the solution is drawn off and collected in VES-WLL-195. The nitric acid is used for INTEC waste treatment and decontamination activities. The nitric acid solution stored in VES-WLL-195 is transferred to:

- the PEWE, VES-WL-133, to acidify the PEWE feed,
- VES-WL-101/111 to acidify the PEWE bottoms,
- VES-NCC-101, -102, -103 to acidify ETS or IWTU feed solutions,
- VES-NCR-171 for reuse at the INTEC, or
- the TFF.

The saturated steam offgas generated from the fractionation process is drawn through a condenser, HE-WLL-396 or HE-WLK-397, where it is partially condensed, producing a reflux stream and steam offgas. The steam and reflux flow through a liquid separator, VES-WLL-198 or VES-WLK-199, where the reflux is removed and returned to the top of the acid fractionator. The reflux flows downward through the upper trays as a final scrub. The remaining steam flows through the separator, and then is heated by a superheater, HE-WLR-394 or HE-WLR-395, is filtered through the High Efficiency Particulate Air (HEPA) filters (F-WLR-176 or F-WLR-177) for radioactive particles, and exhausted to the atmosphere via the INTEC Main Stack.

The Acid Recycle Tank (VES-NCR-171) and Acid Head Tank (VES-NCR-173) are located in the CPP-659 Annex adjacent to the New Waste Calcining Facility (NWCF, CPP-659). VES-NCR-171 has a capacity of approximately 22,500 gallons. The tank is a stainless steel tank that stores acid produced by the LET&D fractionation process. VES-NCR-173 is a stainless steel tank, which stores nitric acid. VES-NCR-173 has capacity of approximately 90 gallons.

Acid from VES-NCR-171 is airlifted into VES-NCR-173 and placed into a common header that can be routed for reuse throughout the INTEC.

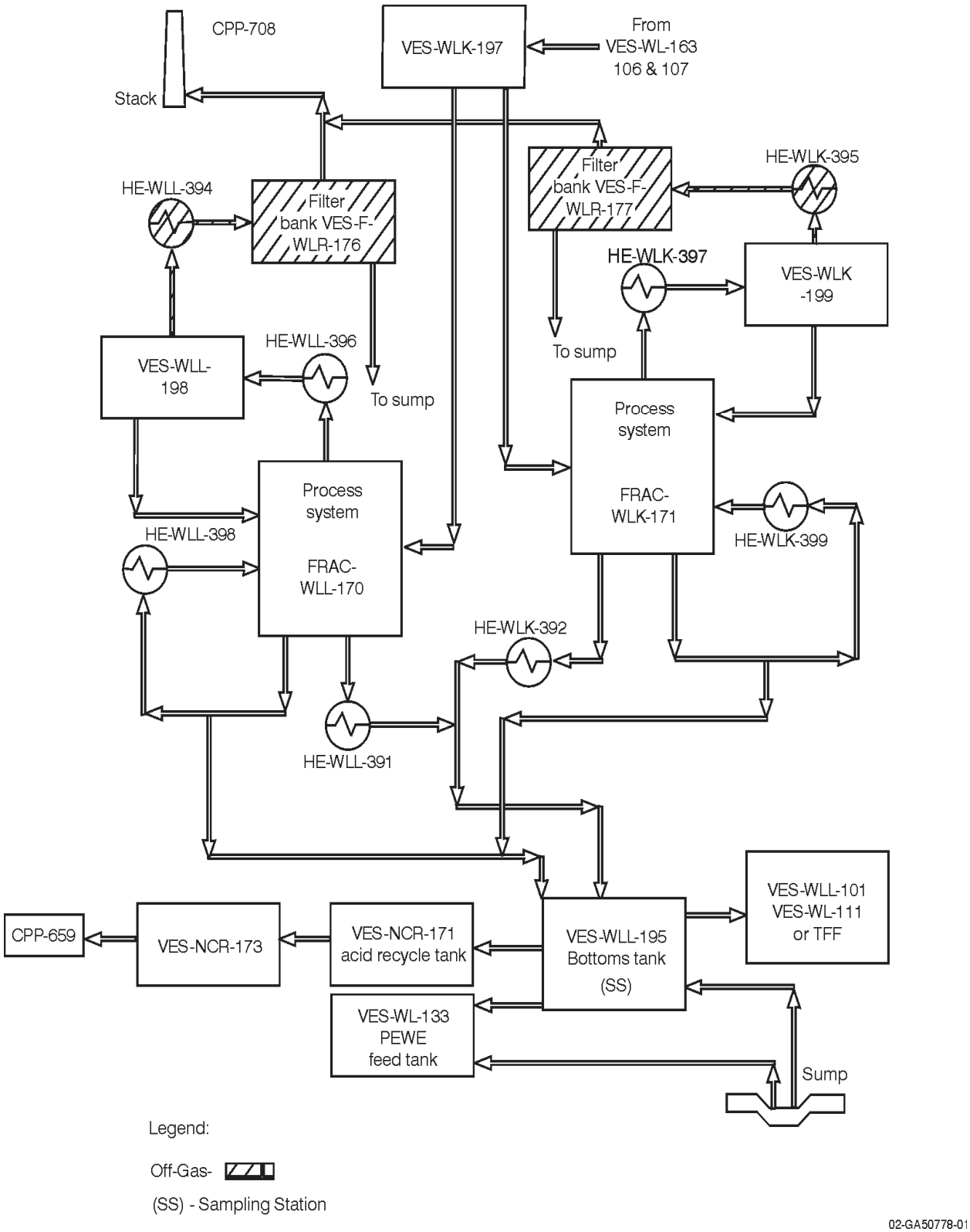

Exhibit D-2. LET&D System flow diagram.

CPP-659 Evaporator Tank System

The ETS equipment functions similarly to the PEWE system equipment. The purpose of the ETS is to reduce the volume of waste sent to and stored in the TFF.

A process flow diagram for the ETS is presented in Exhibit D-3. Exhibit D-4 schematically shows the tanks and equipment that are included in the ETS.

The regulated tanks and ancillary equipment specific to the ETS are listed below:

- VES-NCC-152, CPP-659 Constant Head Feed Tank (regulated under IDAPA as a storage tank)
- EVAP-NCC-150, CPP-659 Evaporator Unit (includes VES-NCC-150, HE-NCC-350, HE-NCC-351) (regulated under IDAPA as a miscellaneous treatment (evaporation) unit with tank storage
- VES-NCC-101, CPP-659 Blend/Hold Tank (regulated under the IDAPA as a storage/treatment tank)
- VES-NCC-102, CPP-659 Blend/Hold Tank (regulated under the IDAPA as a storage/treatment tank)
- VES-NCC-103, CPP-659 Blend/Hold Tank (regulated under the IDAPA as a storage/treatment tank)
- VES-NCC-119, CPP-659 Fluoride Hot Sump Tank (regulated under the IDAPA as a storage/treatment tank)
- VES-NCC-122, CPP-659 Non-Fluoride Hot Sump Tank (regulated under the IDAPA as a storage/treatment tank)
- VES-NCC-108, CPP-659 Scrub Hold Tank (regulated under the IDAPA as a storage/treatment tank)
- VES-NCC-136, CPP-659 Vent Condenser Knockout Drum (regulated under the IDAPA as a storage tank)
- VES-NCC-116, CPP-659 Mist Collector (regulated under the IDAPA as a storage tank)

ETS Operation

The function of the ETS is to concentrate liquid waste sent to and stored in the TFF. The overheads are condensed and transferred to the PEWE System for further treatment of the liquid waste. The ETS bottoms are concentrated and transferred to TFF, which reduces the overall volume of waste

stored in the TFF. Other transfer routes are available for VES-NCC-119 and VES-NCC-122 as needed to meet operational requirements.

To begin the evaporation process, the Constant Head Feed Tank (VES-NCC-152) is filled to operational capacity with liquid hazardous waste from the NWCF Blend Tank (VES-NCC-101). The waste is gravity fed from the Constant Head Feed Tank into the flash column (VES-NCC-150).

Once the waste has risen to the normal liquid level within the flash column, steam is introduced into the shell side of the Reboiler (HE-NCC-350) to create a thermal siphon effect. The thermal siphon effect draws the liquid waste from the bottom of the flash column, up through the tube side of the reboiler, vaporizing a portion of the liquid waste, and returning the vapor/liquid waste into the upper portion of the flash column. At this point, the liquid/vapor waste enters a cyclone separator that removes liquid droplets from the vapors, creating an overhead vapor waste stream. These overhead vapors then pass through a demister mesh pad and flow into the tube side of the Condenser (HE-NCC-351). The overhead vapors are condensed by a flow of cooling water through the shell side of the condenser and drained into the Non-Fluoride Hot Sump Tank (VES-NCC-122). The droplets removed from the vaporized waste fall towards the bottom of the flash column and mix with the liquid waste feed stream from the constant head feed tank.

The cycle is repeated until the specific gravity of the liquid waste in the flash column reaches a procedurally designated value. At this point the liquid waste feed stream from the constant head feed tank is turned off. The remaining contents are allowed to concentrate to the desired specific gravity, then the steam to the reboiler is shut off and the thermal siphon effect ends. Concentrated bottoms from the unit are drained into the Fluoride Hot Sump Tank (VES-NCC-119).

The concentration of liquid waste is accomplished in a manner similar to a distillery. The low boiling point materials in the waste are boiled and then condensed. This separates the feed in to the Non-Fluoride Hot Sump Tank (VES-NCC-122) for low boiling point materials and the Fluoride Hot Sump Tank (VES-NCC-119) for higher boiling point materials. The condensates are normally transferred to the PEWE system and the bottoms are transferred to the TFF. The material entering the system is separated in to the condensate tank or the bottom tanks. The PEWE system further processes the ETS condensates. The PEWE (overheads) condensates are transferred to the LET&D facility for processing and the PEWE bottoms can be routed back to VES-WL-133 for further processing or can be transferred to the TFF or ETS.

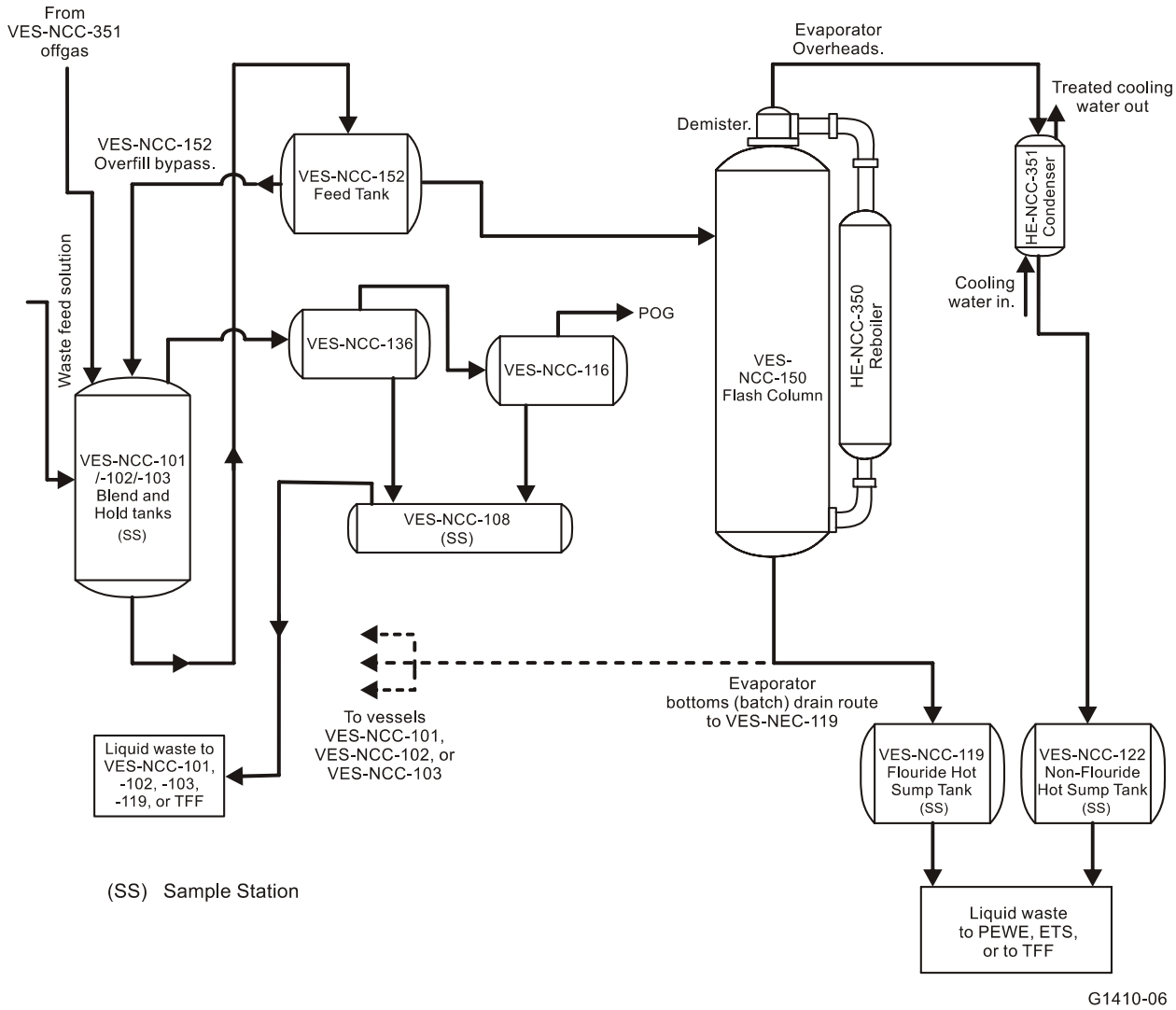

Exhibit D-3. ETS Flow Diagram.

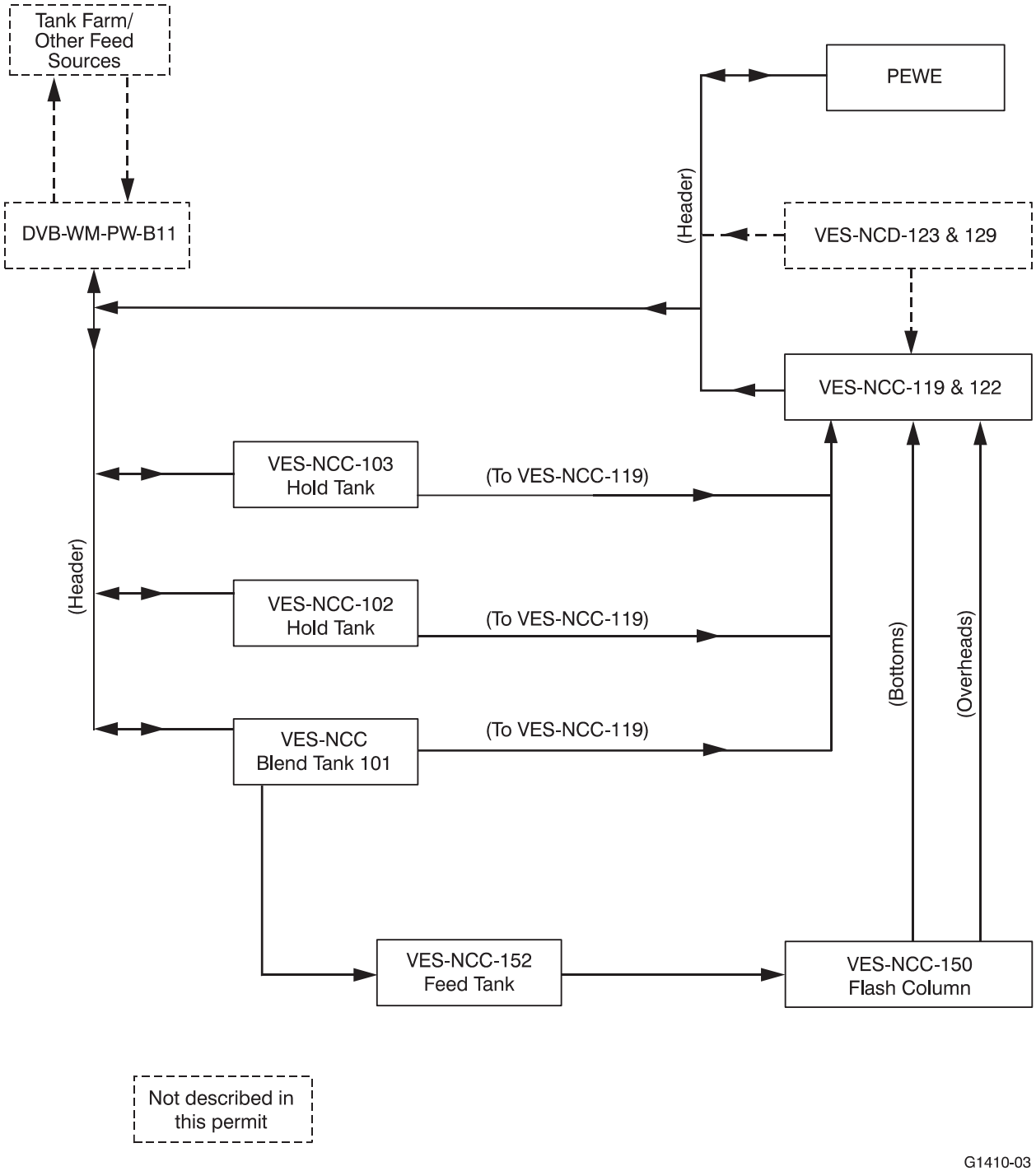

Exhibit D-4. ETS Inputs.

CPP-1696 Integrated Waste Treatment Unit

The IWTU utilizes dual fluidized bed steam reformers to convert liquid waste to a solid granular treatment product. The IWTU is classified as a miscellaneous unit under IDAPA 58.05.05.008 (40 CFR 264.600). The IWTU also utilizes six storage tanks; one to manage liquid feed and IWTU process solutions, two tanks to cool and collect solid treatment product prior to loading it into canisters for storage and ultimate disposal, one to collect offgas condensate from the emission monitors and stack, one to collect treatment product samples, and one tank to collect fire water in the event of IWTU ventilation treatment system upset conditions. Two container storage areas are associated with the IWTU to allow storage of the canisters in portable concrete vaults. The vaults have a maximum storage capacity of 16 canisters and the storage areas allow for 43 vaults and an additional vault in the Vault Loading Area for a total capacity of 44 vaults containing up to 704 canisters.

The regulated tanks and ancillary equipment specific to the IWTU facility are listed below:

- VES-SRC-131, Waste Feed Tank (regulated under IDAPA as a storage/treatment tank)
- VES-SRC-190 and -191, Product Receiver/Coolers (regulated under IDAPA as storage tanks)
- TK-SRE-196, Fire Water Collection Tank (regulated under IDAPA as a storage tank)
- TK-SRH-141, Condensate Collection Tank (regulated under IDAPA as a storage tank)
- Integrated Waste Treatment Unit (regulated under IDAPA as a miscellaneous treatment unit), which can be divided into the following two subsystems; 1) Sodium Bearing Waste (SBW) Treatment System, which manages the liquid and offgas phases of the process; and 2) Product Transfer and Loadout System, which deals with solids management. The components of each of these subsystems are identified below:
    - SBW Treatment System, includes VES-SRC-140 [Denitration and Mineralization Reformer (DMR)], F-SRC-153 (Process Gas Filter), VES-SRC-160 [Carbon Reduction Reformer (CRR)], COL-SRC-160 (Offgas Cooler), F-SRC-160 (Offgas Filter), BLO-SRH-260 A and B (Offgas Blowers), F-SRH-140 A, B, C, and D (Process HEPA Filters), F-SRH-141 A and B (Mercury Adsorbers), and BLO-SRH-240 A and B (Process Exhaust Blowers);
    - Product Transfer and Loadout System, which includes AUG-SRC-440 (DMR Auger/Grinder), F-SRC-191 (Product Receiver Filter), VES-SRC-180 (Product Receiver Filter Product Pump), F-SRC-190 (Product Handling Vacuum Filter), and the Canister Filling Stations (2).

Process flow diagrams for the IWTU (diagrams 632750, 632752, 632753, and 632754) are included in Appendix III to this permit. Also included in Appendix III to this permit are diagram

numbers 632756 and 632757, which contain IWTU typical piping and instrumentation diagram symbols and nomenclature.

IWTU Operations

The SBW Treatment System treats mixed liquid wastes; both SBW and newly generated liquid waste (NGLW) resulting from normal operations and facility deactivation and decommissioning activities. The mixed liquid wastes at the INL consist of radioactive, aqueous solutions with high concentrations of nitric acid, nitrates, alkali metals, aluminum, and a wide variety of other inorganic oxides. The SBW steam reforming process: 1) converts nitric acid, nitrates, and nitrites to nitrogen gas and a small quantity of NOx; 2) converts organic material in the SBW to carbon dioxide and water vapor; 3) converts the radionuclides, sodium, potassium, sulfate, chlorides, fluorides, and non-volatile heavy metals into a radioactive dry, solid mineral waste product.

SBW Feed System

The IWTU Feed System is shown on the following P&IDs; SBW Transfers, diagram numbers 632759, 635083, 635084, 637285, 637293, and IWTU Waste Feed Tank, diagram number 632760.

The IWTU Feed System includes waste transfer equipment located in the New Waste Calcining Facility (NWCF), CPP-659, located at INTEC and waste feed equipment in the IWTU. Waste characteristics of the liquid waste that will be treated in the IWTU are presented in Attachment 2 of this permit.

SBW to be treated in the IWTU is transferred from the INTEC TFF to either of three NWCF Blend and Hold Tanks, VES-NCC-101, VES-NCC-102, or VES-NCC-103. The waste is adjusted, blended, and/or sampled, as necessary, in the NWCF before being pumped to the IWTU for treatment. The SBW is sent to the IWTU through a remote transfer operation controlled by IWTU personnel. Two of the three NWCF Hold Tanks, VES-NCC-102 and VES-NCC-103, are equipped with waste transfer pumps, which feed a common waste transfer pipe for transfer of SBW to the Waste Feed Tank, VES-SRC-131. The piping design also provides the capability of transferring SBW back from the Waste Feed Tank to NWCF or Tank Farm. The transfer line is comprised of stainless steel pipe-in-pipe construction to afford adequate and compatible secondary containment. The transfer line drains back to the NWCF Hold Tanks. The secondary containment line, which is equipped with leak detection and alarm, drains to the Valve Cubicle sump in CPP-659.

The Waste Feed Tank is composed of 304L stainless steel and has a capacity of approximately 2,170 gallons. The Waste Feed Tank is provided with a stainless steel feed pump, P-SRC-231, which pumps SBW to the DMR for processing and also provides tank recirculation. The waste may be adjusted by adding acid or water, as necessary, before being pumped to the DMR for treatment. The pump recirculates the waste feed to keep the anticipated fine heel solids in the SBW fully suspended in solution. A small slip stream is continuously drawn off the recirculation flow for processing in the reformer system. The Waste Feed Tank is provided with bubbler level probes for level measurement. This enables the level to be accurately determined even if the specific gravity of the tank contents varies. The Waste Feed Tank is also supplied with an emergency overflow vent to the Process Cell sump.

The Process Cell contains the Waste Feed Tank, DMR, Process Gas Filter, and Offgas Filter. The shielding on the Process Cell and Canister Packaging Cells generally consists of 32-in.-thick concrete walls and steel roof hatches. The roof hatches of the Process Cell can be opened to allow access to the cell. Access doors are located to provide remote access to components that may need maintenance.

The Waste Feed Pump is equipped with a variable speed drive that provides the ability to control the tank recirculation rate and discharge pressure. The pump speed is controlled from the DCS. The specifications for the Waste Feed Pump are provided as Appendix D-1.

The waste from the tank is pumped by the Waste Feed Pump into the DMR through three waste feed injectors. Three flow control valves control the waste feed to the gas cooled injectors at 0.5 to 1.75 gpm each, with a combined not-to-exceed total feed rate limit of 3.5 gpm. Feed pressure and waste flow in each of the DMR injector feed lines is monitored and alarmed to provide indications of either a restriction in flow or a line break. The waste enters the injectors and is atomized into the DMR with a controlled flow of compressed nitrogen and/or instrument air. The Waste Feed Injectors are provided with purge nitrogen connections to allow the line to be pressurized with nitrogen to clear any build up of solids in the injector, should this occur. The three injectors can also be flushed with water, sodium hydroxide, oxalic acid, potassium permanganate, and/or nitric acid solution, if necessary.

The Waste Feed Tank is provided with a wash-down nozzle installed inside the tank to allow the tank to be flushed with water, sodium hydroxide, oxalic acid, potassium permanganate, and/or nitric acid solution to clean the system prior to any required maintenance or at the time of closure. In addition, the bubbler level instruments can be purged with nitrogen, water, sodium hydroxide, oxalic acid, potassium permanganate, or nitric acid solutions to remove solids that may accumulate inside the bubbler tube.

Denitration and Mineralization Reformer and Carbon Reduction Reformer

The DMR and CRR, and related equipment, are shown on the following P&IDs; Denitration and Mineralization Reformer, diagram number 632762, Process Gas Filter, diagram number 632763, Carbon Reduction Reformer, diagram number 632764, Offgas Filter, diagram number 632765, and Offgas Cooler, diagram number 632766.

The DMR and CRR are the core of the IWTU processing system. In these two units, the waste feed is combined with co-reactants and low pressure superheated steam in a fluidized bed. The DMR volatilizes trace organic materials; nitric acid, nitrates, and nitrites are converted to nitrogen gas and small quantities of NOx; and inorganic constituents in the waste are converted to a radioactive dry, solid mineral product.

Denitration and Mineralization Reformer (DMR)

The DMR, VES-SRC-140, is a vertical cylindrical vessel constructed of Haynes 556 alloy. The DMR contains a steam and coal-heated fluidized bed that operates in an oxygen-starved or reducing environment to treat SBW and NGLW. The DMR is operated under reducing conditions throughout the bed and the entire zone above the bed.

Low-pressure superheated steam enriched with controlled quantities of nitrogen/oxygen is injected into the bottom of the DMR through four fluidizing gas distributors located at the same elevation and spaced evenly through the diameter of the vessel, providing the motive force for the bed. A sparge ring near the bottom of the vessel aids in fluidizing the lower portion of the bed near the vessel wall.

Coal is added to the DMR at regular intervals via a hopper and air-lock at the top of the vessel. The coal provides a heat source to maintain bed temperature and reacts with the superheated steam to provide chemical reactants that promote destruction of nitrogen oxides (NOx).

The waste is fed into the DMR through three nitrogen/air cooled injectors just above the fluidizing gas (oxygen enriched steam) distributor. The three gas-atomized feed nozzles are located on the same side of the vessel. The waste feed is atomized into the vessel using nitrogen and instrument air, and is instantly evaporated and superheated to the bed temperature by the large mass of hot, fluidized treatment product solids. The resulting dried waste solids quickly heat to reaction temperatures. The organics in the feed are volatized, pyrolyzed, and steam reformed upon contact with the hot bed solids.

During start-up, the bed consists of alumina-based bed media. However, during operations, this material is quickly replaced by carbonate-based treatment product, so that within approximately 4 to 5 days of standard operation, the original bed media is substantially converted to treatment product solids. The DMR generally operates between 2 and 8 psig in the area above the bed with an average bed temperature of 580°C - 700°C when producing a carbonate-rich treatment product.

A set of three cyclone separation devices internal to the upper head of the DMR serves to separate larger particles entrained in the gas, returning the captured particles to the bed via gravity drain through downcomer pipes and allowing the process gas to flow from the DMR to the Process Gas Filter.

A portion of the DMR bed solids are removed from the bottom of the DMR as necessary through an auger/grinder assembly and transferred to the Product Receiver/Coolers and Canister Packaging systems. The DMR Auger/Grinder is constructed of stainless steel and consists of two rotating paddles with small augers on each side to rotate the solid material towards the paddles. The paddles rotate with the motor shaft to grind the material over a mesh screen, which will allow particles up to 3/8 in. to flow through the screen to a collection pot. The DMR solids transfer eductor uses nitrogen to pneumatically convey the solids to the Product Receiver/Coolers. After the required amount of solids have been removed, the transfer piping is isolated from the DMR and purged with nitrogen to facilitate complete solids removal from the system and branch lines to avoid plugging.

Process Gas Filter

The process gas from the DMR flows to the Process Gas Filter, F-SRC-153. The Process Gas Filter is comprised of sintered metal powder-type filter elements contained in a Haynes 556 vessel, provided to capture any DMR product fines carried over in the process gas. The Process Gas Filter operates at approximately 50º to 100°C below the DMR temperature and is constructed of appropriate high temperature alloy metals.

The Process Gas Filter is designed to remove 99 % of particles greater than 2.0 microns in size and includes a tubesheet comprised of bundles containing multiple filter elements that filter the process gas. Each bundle can be remotely removed and replaced if filter change-out is needed. The inlet pressure and outlet pressure of the Process Gas Filter are monitored, and the differential pressure across the filter is calculated. Upon high differential pressure across the filter, the filter can be cleaned online using pulse cleaning with nitrogen. Nitrogen is pulsed sequentially through the filter bundles and removed filter cake particulates drop by gravity to the bottom cone of the filter vessel for collection. The filtered solids are fluidized into the Process Gas Filter Transfer Eductor, JET-SRC-553, using nitrogen to prevent bridging

prior to and during pneumatic transfer to the Product Receivers/Coolers. The specifications for the sintered metal filter elements are provided in Appendix D-2.

Carbon Reduction Reformer (CRR)

The CRR is a vertical, cylindrical, carbon steel vessel that is entirely refractory-lined. The refractory throughout the system is composed of high alumina/chrome oxide. The CRR is fluidized by the process gases from the DMR. Carbon is added to the reformer as the primary heat source and to provide further chemical reactions for the process. A stainless steel shroud that is offset from the outer surface of the CRR surrounds most of the vessel. The purpose of the shroud is to channel cooling air flow around the CRR outer shell to limit heat losses to the building. The CRR interior wall temperature is thereby regulated to prevent gases from condensing at the internal vessel walls. The piping between the CRR and Offgas Cooler is also refractory lined and encased within a shroud. Thermocouples monitor the external temperature of the vessel and/or piping and regulate the air flow through the shroud by adjusting damper positions that control the flow of air through the shroud and into the heating, ventilating, and air conditioning system.

The process gases from the DMR flow through the Process Gas Filter to the fluid gas inlet distributors of the CRR, VES-SRC-160, located near the bottom of the vessel. Oxygen/air is fed into the CRR at three locations within the bed; at the elevation of the fluid gas inlet distributors, at the mid bed, and at the splash zone at the top of the bed. This creates distinct reducing and oxidizing zones in the CRR. In the reducing sections residual NOx from the DMR is further reduced to nitrogen gas. The temperatures throughout the fluidized bed are uniform and only minimal levels of thermal NOx are generated. Organic materials, hydrogen, and carbon monoxide are oxidized and steam reformed in the oxidizing zone (upper portions of the bed and above) of the CRR to produce carbon dioxide and water.

The average normal operating temperature of the CRR is maintained between 775°C - 1150°C. Under normal operating conditions the CRR operates under a vacuum of approximately –30” water column at the top of the bed.

The CRR fluidized bed media is a semi-permanent fluidized bed comprised of granular alumina. Since essentially all solids are removed from the DMR process gases before input as fluidizing gas in the CRR, the only increase in bed solids in the CRR is from planned additions from the additive feeder system. The additives consist of alumina and/or aluminum tri-hydrate from the additive feeder system to prevent agglomeration in the bed. Feed bed media is added only to make-up for bed media particle attrition and carryover (elutriation) of bed media particles to the offgas treatment system.

Offgas Cooler

The Offgas Cooler, COL-SRC-160 is a vertically suspended vessel located adjacent to the CRR. The Offgas Cooler is constructed of allegheny-ludlum (AL-6XN®) for the upper shell, Hastelloy C276 for the lower cone, and Haynes 556 for the inner liner through the entire vessel.

The Offgas Cooler is designed to cool the treated offgas from the CRR to below 200°C. The cooling of the offgas is achieved by direct water cooling of the offgas vapor with a nitrogen-atomized water spray. All of the water is evaporated and is carried with the cooled offgas as water vapor to the Offgas Filter.

In order to protect downstream equipment in case of system upset, offgas cooling is provided by means of a pressurized water surge tank which discharges water into the Offgas Cooler through a manifold pipe into the cooling spray nozzle located inside the Offgas Cooler vessel. The Offgas Cooler Surge Water Tank provides 200 gallons of plant water storage.

Offgas Filter

The Offgas Filter is comprised of sintered metal pleated fiber filter elements contained in an AL-6XN® stainless-steel vessel. These elements are provided to capture primarily carbon fines carried over from the CRR in the now cooled process gas in order to reduce loading on the downstream HEPA filters. The filter is operated continuously at approximately -30 to -40 inch water column and 120-250°C. The filter and piping are insulated to maintain temperature in the offgas system. The sintered metal filters are designed to remove 97 % of particles greater than 5.0 microns in size. The specifications for the sintered metal filter elements are provided in Appendix D-2. Collected filter solids are pneumatically transferred using nitrogen to the Product Receiver/Coolers where the fines are combined with the granular solids removed from the bottom of the DMR.

The Offgas Filter includes a tubesheet comprised of multiple filter bundles that filter the process gas. Each bundle can be remotely removed and replaced if filter change-out is needed. The inlet pressure and outlet pressure are monitored, and the differential pressure across the filter is calculated. Upon high differential pressure across the filter, the filter can be cleaned online using pulse cleaning with nitrogen. Nitrogen is pulsed sequentially through the filter bundles and removed filter cake particulates drop by gravity to the bottom cone of the filter vessel for collection. The filtered solids are fluidized into the Offgas Filter Transfer Eductor, JET-SRC-560, using nitrogen to prevent bridging prior to and during pneumatic transfer to the Product Receivers/Coolers.

Offgas Blowers

Offgas Blowers, BLO-SRH-260 A/B provide vacuum for the Process Gas Filter, CRR, and Offgas Filter. One blower will operate and the other will act as an installed spare. These blowers are designed to generate a suction pressure of approximately –84" water column at 8,400 actual cubic feet per minute.

The Offgas Blowers discharge pressure, temperature, and flow rate are monitored. Blower discharge is maintained at approximately –5" water column by the Process Exhaust Blowers, BLO-SRH-240 A/B, located downstream of the Process HEPA Filters and Mercury Adsorbers.

Process Exhaust System

The Process Exhaust System includes the Process HEPA Filters, the Mercury Adsorbers, and the Process Exhaust Blowers. The Process Exhaust System is shown on the following P&IDs; Process HEPA Filters, diagram number 632797, Mercury Adsorbers, diagram number 632798, and Process Exhaust Monitoring and Discharge, diagram number 632799.

The Process HEPA Filters, F-SRH-140 A/B/C/D, are located upstream of the Mercury Adsorbers and are provided to filter out any trace radioactive particulate components in the offgas. The Process HEPA Filter system consists of four filter tiers. The filter tiers are provided with individual inlet/outlet connections and inlet/outlet bubble-tight dampers and contain a pre-filter, test inlet section, primary HEPA filter, test combination section, secondary HEPA filter, and a test outlet section. The Process HEPA Filters provide a total of approximately 10,000 acfm filtration capacity. The filter tiers are stacked vertically with the gas flow split equally between the tiers. All offgas piping and the Process HEPA Filters are insulated to maintain temperature in the offgas system above 120°C.

The total combined stream inlet temperature to the process HEPA Filters is monitored, as are the inlet pressure, outlet pressure, and the differential pressure across the HEPA filters.

Mercury Adsorbers

The Mercury Adsorbers, F-SRH-141 A/B, utilize sulfur impregnated granular activated carbon (GAC) beds to remove vapor phase mercury that may be present in the process gas. The adsorber system is designed to operate the adsorbers in series and provides for vertical upflow through two vertical GAC beds of equal volume.

Each of the Mercury Adsorbers is conservatively designed with a 30 to 50 fpm face velocity and greater than a 7-second gas residence time at normal flow conditions.

Manufacturer specifications indicate that fully depleted GAC media can hold in excess of 20% by weight mercury. Pilot-scale testing based on the IWTU bed design confirms this level of mercury retention; demonstrating GAC adsorption approaching 20 weight percent (see Section 7.7.9.1 of *Pilot Plant Report for Treating Sodium-Bearing Waste Surrogates Carbonate Flowsheet*, Appendix XII to this permit). For purposes of determination of average mercury loading at the time of bed changeout, it is estimated that each bed of GAC media will hold approximately 4,300 lbs of mercury. This value is conservatively based on a bed loading of 15 weight percent. Calculation details are featured in Appendix D-3.

Mercury sample nozzles are provided across each of the carbon beds and also across both combined beds. Mercury detection will be performed by obtaining samples and having the samples analyzed at a laboratory facility. When the mercury concentration in the offgas from the primary bed exceeds 50,000 µg/dscm, the feed will be stopped and GAC changeout will commence. Since the Mercury Adsorbers are configured in series, any mercury that passes through the primary bed upon breakthrough is captured in the secondary bed. Additional information regarding Mercury Adsorber sampling frequency and criteria necessitating changeout of spent GAC media is provided in Attachment 2, Section C-2c(3) of this permit.

Process Exhaust and Building Ventilation Exhaust Blowers

The Process Exhaust Blowers, BLO-SRH-240A/B, provide vacuum pressure to the Process HEPA Filters and the Mercury Adsorbers to inhibit leaking out of the process. Each blower is designed for approximately 8,400 acfm with a design static differential pressure of approximately -85 inches of water column. Normally, one blower will operate at a time at 100% capacity with a parallel installed spare. The blowers operating capacity is controlled via a variable frequency drive motor that operates under a constant flow controller. The pressure differential between blower inlet and outlet lines is continuously monitored. These blowers discharge to the Air Mixing Box, MIX-SRH-140.

Three Building Ventilation Exhaust Blowers, BLO-SRH-200A/B/C are provided for CPP-1696. To ensure 100% availability, two blowers will be in service and one in standby. Each blower is equipped with a variable frequency drive motor and designed for 30,000 acfm with approximately a 20 in water differential pressure. These blowers discharge to the Air Mixing Box, MIX-SRH-140.

Air Mixing Box

The Air Mixing Box, MIX-SRH-140, is designed to improve the blending of the process exhaust and building ventilation exhaust streams. The air mixing box provides and maintains the volume needed to contain the air exhausted from the two systems (process and building) and also supplies the greatest level of mixing in the shortest distance. The air mixer box is 8 ft 8 in x 8 ft 8 in x 16 ft and includes dampers, damper actuators, static mixers for each inlet stream, and a mixing section. The air mixing box discharges to the Stack, STK-SRE-140.

Stack

The Stack, STK-SRE-140, is constructed of carbon steel and designed to ensure that gases are exhausted in a safe manner. Stack height is approximately 120 ft, with a base diameter of approximately 8 ft and a diameter of approximately 5 ft at the discharge point.

Condensate occurring in the stack drains directly from the base of the stack to the Offgas Condensate Collection Tank, TK-SRH-141. The contents of this tank will be pumped to the Waste Feed Tank, VES-SRC-131.

Continuous Emissions Monitoring System (CEMS)

The discharge gas from the Process Exhaust Blowers, downstream of the Mercury Adsorbers, but upstream of the air mixing box, is continuously monitored for carbon monoxide and oxygen. The continuous gas sample stream is analyzed in the instrument, and the sample is discharged back into the process ductwork. Offgas condensate from operation of the CEMS is collected in the Offgas Condensate Collection Tank.

Additive Systems

Additives are used in the DMR and CRR to control fluidized bed temperature and fluidized bed chemistry. These additives include but are not limited to: coal, used in the DMR to help control temperature and the CRR to facilitate startup; carbon (petroleum coke), used to help maintain fluidized bed temperature in the CRR; fluidized bed media, which is granular alumina bead media of varying sizes for either the DMR or CRR and to provide seed particles for control of particle size distribution in the reformers; and alumina hydroxide to prevent alkali agglomeration in the CRR.

The additive system (see diagrams 632752, 632779, 632780, 632782, and 632783 in Appendix III) receives coal, carbon, fluidized bed media, and alumina hydroxide in bags, which are loaded into their respective storage bins with a bag loading system. A nitrogen-inert atmosphere is provided for the coal and carbon storage silos and transport systems. Two separate mechanical conveyor systems are provided: one each for the DMR and CRR. Additives are fed to the process by mechanical loss-in-weight systems.

The coal (granular, non activated carbon) additive system is designed to receive, store, and feed coal at a variable rate to a mechanical conveyor. The coal is received in bulk bags delivered by truck. The bags are emptied into the Coal Storage Silos that are designed to hold a minimum of 36 hour normal operation capacity. The mechanical conveyor delivers the coal to the DMR or CRR during initial heat-up. The coal additive system is purged with nitrogen to maintain an inert atmosphere.

The carbon (petroleum coke) additive system is designed to receive, store, and feed granular carbon at a variable rate to the mechanical conveyor. The carbon is received in bulk bags delivered by truck. The bags are emptied into the Carbon Storage Silo that is designed to hold a minimum of 36 hour normal operation capacity. The mechanical conveyor delivers the carbon to the CRR. The carbon additive system and mechanical conveyor is purged with nitrogen to maintain an inert atmosphere.

- The fluidized bed media (alumina/sintered bauxite) additive system is designed to receive, store, and feed fluidized bed media. A local loss-in-weight vibratory feeder feeds the media to the DMR and the CRR, as needed. The fluidized bed media is received in bulk bags. The bags are emptied into the storage bin located above the CRR or DMR depending on where it is needed.

The alumina hydroxide additive system is designed to receive, store, and feed granular alumina hydroxide to the CRR. The alumina hydroxide is received in bulk bags. The bags are emptied into the storage bin located above the CRR. A local loss-in-weight vibratory feeder is used to feed the alumina hydroxide to the CRR.

DMR bed seed particles (alumina/bauxite) may be added to the DMR during operation if the undissolved solids in the waste feed are not adequate to provide seed particles and maintain control of bed particle size. Clay and/or alumina hydroxide may be added to either fluidized bed to prevent agglomeration of low melting point alkali salts.

Product Transfer and Load-out System

The Product Transfer and Load-out System is shown on the following P&IDs:

- Product Receiver and Canister Filling - Sheet 1, P&ID diagram number 632787
- Product Receiver and Canister Filling - Sheet 2, P&ID diagram number 632788
- Product Cooling, P&ID diagram number 632790
- Canister Vacuum, P&ID diagram number 632791
- Canister Handling, P&ID diagram number 632792.

The Product Transfer and Load-out System consists of the DMR Auger/Grinder, the Product Receiver/Coolers, a Product Receiver Filter and Product Receiver Filter Product Pump, a Product Handling Vacuum Filter, and mechanical equipment for handling, moving, capping, scanning, and decontaminating canisters of treated waste.

Product Receiver/Cooler and Cooling Loop

The Product Receiver/Coolers, VES-SRC-190/191 are 316 stainless-steel vessels that receive treatment product and elutriated fines from the DMR and CRR, the Process Gas Filter, and the Offgas Filter. Nitrogen is supplied to the Product Receiver/Coolers to cool the treatment product. Level detection is provided for the bottom cones of the receivers. When the solids cool to a predetermined temperature, the solids are transferred to a remote handled transuranic (RH-TRU) canister located below each Receiver/Cooler. The temperature of the solids accumulation section of the receiver/cooler is monitored by thermocouples.

From the Product Receiver/Coolers, the vent gas flows to the Product Receiver Filter, F-SRC-191, then to the offgas filter. Only one Product Receiver/Cooler is aligned with the nitrogen cooling flow at a time. The Product Receiver Filter is a 316 stainless-steel vessel containing high temperature-rated sintered metal filter elements designed to remove 99.95 % of all solids greater than 0.5 microns in the loop stream. The Product Receiver Filter is continuously monitored for temperature. The inlet pressure and outlet pressure are monitored, and the differential pressure across the filter is calculated. Upon high differential pressure the sintered metal filter elements are cleaned online using pulse nitrogen cleaning. Level detection is provided for the bottom cone of the filter. When the solids reach a predetermined level, the solids are transferred to the Product Receiver Filter Product Pump, VES-SRC-180, and then

transported to one of the Product Receiver Coolers, depending on the valve lineup. The specifications for the sintered metal filter elements are provided in Appendix D-2.

Canister Fill Stations

The canister fill stations are two parallel trains of equipment to fill, cap, and decontaminate canisters. These canisters are filled with the waste treatment product collected in the DMR and the Process Gas and Offgas Filters. The filled canisters are transferred via the Transfer Bell/Crane and placed in canister storage vaults for interim storage in the Vault Storage Area for subsequent shipment and ultimate disposal. Each of the two parallel trains consists of the following: a shielded loading cell with overhead plug to allow the Transfer Bell to place and remove canisters from the canister loading cell, a canister fill station conveyor and lift, to move the canisters though the filling and capping process, a canister sealing nozzle to prevent leakage to the outside of the canister, and a canister decontamination station to swipe and decontaminate the canister surface. Also included is a vacuum system to draw air and potential product spills away from the canister and into a collection system. Included in the vacuum system is the Product Handling Vacuum Filter, F-SRC-190. This vessel is composed of 304 stainless steel and contains sintered metal filter elements that are designed to remove 99.95 % of all solids greater than 0.5 microns in the vacuum flow. The specifications for the sintered metal filter elements are provided in Appendix D-2. After passing through the Product Handling Vacuum Filter the air is drawn through the Offgas Filter and subsequently to all down stream process gas air pollution control equipment.

Operators view and control operations through a shielded window and locally mounted control panel. The operator is also required to perform a number of tasks (e.g., canister swab for survey to release) and visualizations before initiating the next operational cycle.

Treatment product produced by the process is transferred to the Product Receiver/Coolers. The Product Receiver/Coolers fluidize and cool the treatment product through the introduction of nitrogen into the bottom the vessel.

An empty canister is placed in the cell on the canister cart using the Transfer Bell/Crane. The canister cart is moved to the pintle plug removal station. The canister cart lifting mechanism is activated and the canister is raised to engage the pintle plug removal system, which removes the plug. The pintle plug removal system retains the pintle plug and the canister cart lifting mechanism lowers the canister.

The canister cart is then moved to the filling station. The canister cart lifting mechanism is activated and the canister is raised to engage the canister fill port. Once the pressure seal between the canister and the canister fill port is verified, an operator lowers the canister filling feed nozzle and fills the canister. The canister fill level is verified and catalogued prior to disengaging the fill port.

The canister cart is then moved back to the pintle plug removal station and the pintle plug is re-inserted into the canister top. The canister cart lifting mechanism lowers the canister from the pintle plug removal system.

Next, the canister cart is moved to the canister entry/exit station. Operators survey and prepare the canister for exit from the filling cell by using the master/slave manipulators, the rotating canister cart platform, vacuum decontamination system, shield windows, closed circuit television, and double door pass-through (glovebox). Prior to removal there is verification that the pintle plug is in place.

The Transfer Bell Crane brings the Transfer Bell assembly into position over the entry portal of the filling cell and the Transfer Bell/Crane grapple is lowered into the filling cell and engages the canister pintle. The Transfer Bell Crane raises the canister into the Shielding Bell. The shield door on the bottom of the Shielding Bell closes to completely shield the canister.

The Transfer Bell Crane then moves the Shield Bell to the Vault Loading Area of the process building to either load the canister into a portable storage vault or into a RH-72B shipping cask for transport.

Solids Sample Cell

A Solids Sample Cell is provided adjacent to the Canister Packaging Cells to allow sampling of the treatment product, limited analysis such as particle size and bulk density, and transfer of the samples to the Remote Analytical Laboratory at INTEC for analyses.

Canisters

The canister that will be utilized for packaging the sodium carbonate treatment product from the IWTU is the remote handled transuranic RH-TRU canister. The IWTU treatment product is considered to be remote-handled waste due to the high radioactivity content.

Transfer Bell Assembly

The Transfer Bell is employed to transfer loaded waste containers (canisters) within the IWTU. The Transfer Bell is a bottom-loaded, shielded bell that is a fixed component on the dedicated transfer crane carrier. To accommodate construction and general tolerance differences, the Transfer Bell is fitted with an extendable shielded skirt mounted on the bottom. This skirt provides radiological protection during canister lifting/transfer activities. A dedicated rail bridge crane carrier, consisting of bridge and trolley, is configured for automatic and manual operation. Its travel is confined by physical configuration to cover only the necessary operations just above the canister fill and decontamination cell, storage vault loading, and the transportation cask-loading (truck) bay. Crane and Transfer Bell controls, along with video feed of the secondary positioning camera system are fed to a pedestal mounted control panel located near the loading vaults.

A separate maintenance crane is also provided for IWTU operations. This crane is used primarily to move hatch covers and equipment for remote maintenance. The maintenance crane spans the whole process area from west to east.

DMR Fluid Gas System

This system combines low pressure oxygen, steam, and nitrogen from their respective systems for the IWTU to use as fluidizing gas in the DMR. It also superheats these combined gases in a low pressure superheater that heats the gases up to the desired process temperature, approximately 600°C. The DMR Fluid Gas System is shown on the following P&IDs; DMR Fluid Gas System, diagram number 632801, and Denitration and Mineralization Reformer, diagram number 632762.

Steam from the IWTU Steam System is mixed with oxygen upstream of the DMR Fluidizing Gas Superheater, HTR-SRB-365. The oxygen stream is provided from the leased IWTU Oxygen System.

The oxygen flow rate to enrich the steam flowing to the DMR is determined and set by the operating temperature conditions in the DMR. The oxygen flow rate in the superheated steam is one of the means of temperature control in the DMR during waste processing operations.

The oxygen enriched steam flows through the DMR Fluidizing Gas Superheater. The Fluidizing Gas Superheater is an in-line electric heater. The temperature and pressure of the DMR Fluidizing Gas feed to the unit is monitored. The temperature of the steam exiting the second in-line heating unit is monitored and controlled. Upon low-low temperature alarm of the steam exiting the superheater, the

steam and oxygen and waste feed injection to the DMR will be shut down and the DMR fluidizing gas will be switched to nitrogen.

For start-up and upset conditions in the DMR, nitrogen is heated in the Fluidizing Gas Superheater, and is used in place of steam and/or steam/oxygen to fluidize the bed in the DMR. Nitrogen for the system is provided by the leased IWTU Nitrogen System.

IWTU Support Systems

Nitrogen

The IWTU Nitrogen System is comprised of a liquid nitrogen tank, ambient vaporizers and a receiver. The leased equipment is located on the west side of the IWTU.

Breathing Air

If required, breathing air can be supplied via dedicated portable compressors at INTEC or through portable self-contained breathing apparatus.

Fire Water Collection Tank

Fire Water Collection Tank, TK-SRE-196, is provided to collect fire suppression water from the Process HEPA Filters, Building Ventilation HEPA Filters, and the Mercury Adsorbers.

Warm-Up and Initiation of Feed to the IWTU

A general protocol delineating activities required during warm-up and initiation of feed to the IWTU is provided as Appendix D-4 to this permit. These steps ensure that all process controls are functioning appropriately and that the system safely reaches predetermined operating parameters prior to initiating waste feed, thus ensuring protection of workers, the public, and the environment.

ILWMS Tank Treatment

Tank treatment (T01) may be conducted in any of the following tanks: VES-WL-133, VES-WL-102, VES-WL-101, VES-WL-111, VES-WM-100, VES-WM-101, VES-WM-102, VES-WL-106, VES-WL-107, VES-WL-163, VES-NCC-101, VES-NCC-102, VES-NCC-103, VES-NCC-119, VES-NCC-122, VES-NCC-108, and VES-SRC-131. Tank treatment consists of chemical addition and/or solids removal. Typical chemical additives used are described in Section C-2f

of the permit. Tank treatment is also performed in the PEWE Feed Sediment Tank, VES-WL-132, which contains a baffle-and-weir system designed to separate solids from the PEWE waste feed stream.

D-1 CONTAINERS

A general building description of CPP-1696 is located in Section B of this permit. Supporting drawings are in the drawing package, Appendix II, in this permit. The container storage areas of CPP-1696 are located in the filling/capping area (Vault Loading Area) and the north end of CPP-1696 (Vault Storage Area).

The containers in this section are also referred to as canisters. These RH-TRU canisters are constructed of stainless steel and are compatible with the sodium carbonate-based granular solid that is produced by the IWTU. The treatment product is pneumatically transported using nitrogen to the canister filling stations. A canister is placed under one of the Product Receiver/Cooler tanks (VES-SRC-190/191), filled to its designated capacity, and capped. Afterwards, the canister is examined for external contamination, cleaned as necessary, monitored for surface dose, and visually inspected. The canister is then conveyed by the Transfer Bell and carrier crane to a concrete portable storage vault in the Vault Loading Area.

The portable storage vaults are composed of concrete with a nominal thickness of approximately 2 ft along each side, including the bottom and the lid. The vault lid is removable via hydraulic jacks that slide beneath the lid overhang, approximately 8 in. on each side, and lift the lid straight above the vault. The inside of the vault contains a metal framework that divides the vault into sixteen discrete areas allowing each vault to contain up to 16 canisters. The vaults are transported via air pallets and portable tractors or forklifts.

The Vault Loading Area is comprised of a concrete cell that is approximately 15 ft 1 in. wide and 16 ft 3 in. deep. At the top of the cell are a series of 16 concrete plugs arranged in a 4x4 pattern to coincide with the 16 canister storage spaces inside the vault. To transfer canisters into or out of a portable storage vault, the vault is first positioned in front of the Vault Loading Area where the lid is removed via air jacks. The vault is then moved into the Vault Loading Area. Only one vault may be stored in the Vault Loading Area at a time. Using the Transfer Bell and crane, one of the concrete plugs at the top of the Vault Loading Area is removed. The Transfer Bell and crane are then used to load/unload a canister and the plug is replaced. Once the vault is full, the lid is lowered onto the vault and it is moved to the Vault Storage Area.

The Vault Storage Area is located at the north end of CPP-1696 and is designed to hold up to 36 storage vaults in a 6x6 configuration (see diagram 632359 in Appendix III to this permit). The vaults are transported using air pallets and a portable tractor or forklift. Upon approval for ultimate disposal, one vault at a time will be conveyed to the Vault Loading Area. Then one canister per shipment will be loaded into a shipping cask at the truck bay and sent to the ultimate disposal facility.

D-1b Containers without Free Liquids

D-1b(1) Test for Free Liquids: [IDAPA 58.01.05.012; 40 CFR 270.15(b)(1)]

Wastes to be stored in the Vault Storage or Loading Areas in CPP-1696 will not contain free liquids. This condition is assured through normal monitoring of IWTU operating conditions.

The following process information assures no free liquids are in the IWTU waste. The dry sodium carbonate-based granular waste treatment product is produced in steam reformers that operate at temperatures between 580 and 1150˚C. The treatment process drives off all liquids.

D-1b(2) Description of Containers: [IDAPA 58.01.05.008; 40 CFR 264.171 and 264.172]

The canisters that will be used for packaging the sodium carbonate-based granular treatment product from the steam reformers are RH-TRU canisters approved for shipment in a 72B cask to the ultimate disposal facility. The stainless-steel canisters are compatible with the sodium carbonate-based treatment product. Each canister is approximately 26 in. in diameter and 10 ft high and has a capacity of approximately 34 ft^3.

D-1b(3) Container Management Practices: [IDAPA 58.01.05.008; 40 CFR 264.173]

The containers (canisters) are vented through a HEPA filter while stored. Containers will be kept closed during storage, except when waste is being added or removed inside the shielded canister filling cells. Containers will not be opened, handled, or stored in a manner that may cause them to rupture or to leak. INTEC personnel follow established procedures designed to minimize the probability of waste container accidents.

The IWTU process operations are geared towards producing full canisters. Each canister may be slightly overfilled and then vacuumed down to achieve a “full” level condition. If a process anomaly

occurs and there is insufficient treatment product inventory in the Receiver/Cooler vessel to completely fill a canister, then the canister will remain connected and sealed at the filling station within the cell until more treatment product is transferred and available to fill the canister. If it becomes necessary for personnel to enter the cell to perform system maintenance or repairs, then any partially filled canister will be capped and transferred to a storage vault prior to personnel entry. The capability also exists to empty the partially filled canister in the canister fill cell using system vacuum.

Containers will be moved using equipment such as cranes, forklifts, and/or air pallets within CPP-1696. Inside the truck bay of CPP-1696 one canister per shipment will be loaded into an RH-72B transportation cask on a flatbed semi-trailer for shipment to the ultimate disposal facility. These shipments must comply with applicable U.S. Department of Energy, Department of Transportation, U.S. Environmental Protection Agency, U.S. Nuclear Regulatory Commission, and disposal facility requirements.

D-1b(4) Container Storage Area Drainage: [IDAPA 58.01.05.008, 012; 40 CFR 264.175(c)(2), 270.15(b)(2)]

As described earlier, the RH-TRU canisters are loaded into concrete portable storage vaults for shielding during storage. The Vault Storage and Loading Areas are located in an enclosed building that prevents accumulated liquid from precipitation coming in contact with the vaults that contain the canisters. The vaults are also equipped with approximately 8-inch shoes that would further prevent accumulated liquids from coming into contact with the waste containers.

D-2 TANK SYSTEMS

D-2a Existing Tank Systems

ILWMS existing tank systems are equipped with secondary containment and leak detection devices that are compatible with the types of waste managed. See Section D-2f for additional information regarding containment and detection of releases.

D-2a(2) Existing Corrosion Practices: [IDAPA 58.01.05.008; 40 CFR 264.191(b)(3)]

The Cathodic Protection System is inspected for proper operation at least annually; and all sources of impressed current are inspected and/or tested bi-monthly, in accordance with IDAPA 58.01.05.008 [40 CFR § 264.195(g)(1) and (2)].

D-2b New Tank Systems

The PWL Collection System is a new system with several tanks, which collects hazardous waste liquid from CPP-604 and CPP-649, and transfers the waste to the PEWE system.

VES-WL-111 is a new tank system to supplement the existing Bottoms Collection Tank, VES-WL-101.

The LET&D facility is a new system, which includes several tanks. The tanks store and treat hazardous waste.

The INTEC Tank Farm Valve Box C-40, from a regulatory standpoint, is considered ancillary equipment to existing ILWMS tanks. No new tanks were installed as part of this project. This upgrade allows more operational flexibility for transfers between PEWE tank systems.

The Acid Recycle Tank, VES-NCR-171, and Acid Head Tank, VES-NCR-173, are a new tank system. VES-NCR-171 stores acid produced by the LET&D fractionation process. VES-NCR-173 is a stainless steel tank, which stores acid prior to being routed for reuse throughout the INTEC.

The Process Condensate Collection Tank, VES-WL-150, is a new tank system. The tank collects floor drains and offgas condensate, which is transferred to the PEWE feed tanks.

The Constant Head Feed Tank, VES-NCC-152, and EVAP-NCC-150 are new tank systems which manage hazardous waste liquids associated with the ETS.

The IWTU is a new treatment system that contains six tanks for storage. Two of these tanks are designed to store liquids.

The Waste Feed Tank, VES-SRC-131, is a new tank system. VES-SRC-131 stores liquid feed solutions for the DMR.

The Fire Water Collection Tank, TK-SRE-196, is a new tank system that stores used fire water in the event of an IWTU Process HEPA Filter, Building Ventilation HEPA Filter, or Mercury Adsorber fire.

The Condensate Collection Tank, TK-SRH-141, is a new tank system that stores condensate from the process off-gas and the IWTU stack.

The Product Receiver/Cooler Tanks, VES-SRC-190/191 store solid treatment product for cooling or transfer prior to loading the waste into canisters for ultimate disposal.

For a detailed description of these new tanks, see Attachment 1, Section D of this permit.

D-2b(1) Assessment of New Tank System's Integrity [IDAPA 58.01.05.008 and 58.01.05.012; 40 CFR 264.192 and 270.16(a)]

A written assessment, which has been reviewed and certified by an independent, qualified, registered professional engineer (P.E.), as to the structural integrity and suitability of the PWL Collection System for handling hazardous waste, is included in Appendix D-2 of the original application.

A written assessment, which has been reviewed and certified by an independent, qualified, registered P.E., as to the structural integrity and suitability of the bottoms collection tank system, VES-WL-111, for handling hazardous waste, is included in Appendix D-2 of the original application.

A written assessment, which has been reviewed and certified by an independent, qualified, registered P.E., as to the structural integrity and suitability of the LET&D facility for handling hazardous waste, is included in Appendix D-2 of the original application.

A written assessment, which has been reviewed and certified by an independent, qualified, registered P.E., as to the structural integrity and suitability of the INTEC Tank Farm Valve Box C-40 for handling hazardous waste, is included in Appendix D-2 of the original application.

A written assessment, which has been reviewed and certified by an independent, qualified, registered P.E., as to the structural integrity and suitability of the Acid Recycle Tank, VES-NCR-171, and Acid Head Tank, VES-NCR-173, is included in Appendix D-2 of the original application.

Written assessments, which have been reviewed and certified by an independent, qualified, registered P.E., as to the structural integrity and suitability of VES-WL-101/VES-WL-102 vault secondary containment and the isolation of VES-WL-102 project, which includes the installation of the Process Condensate Collection Tank, VES-WL-150, are included in Appendix D-2 of the original application.

A written assessment attesting to the structural integrity and suitability of VES-NCC-152 and VES-NCC-150 for handling hazardous waste was prepared and certified by an independent, qualified registered PE.

Written assessments, which have been reviewed and certified by an independent, qualified, registered P.E., as to the structural integrity and suitability of the IWTU components for handling hazardous waste have been submitted to DEQ separately.

D-2b(2) External Corrosion Protection: [IDAPA 58.01.05.008; 40 CFR 264.192(f)]

The Cathodic Protection System is inspected for proper operation at least annually; and all sources of impressed current are inspected and/or tested bi-monthly, in accordance with IDAPA 58.01.05.008 [40 CFR § 264.195(g)(1) and (2)].

D-2b(3) Description of Tank System Installation and Testing Plans and Procedures [IDAPA 58.01.05.008; 40 CFR 264.192(b)-(e) and 270.16(f)]

The P.E. certifications of the Design and Installation of the PWL Collection System, VES-WL-111, the LET&D facility, the INTEC Tank Farm Valve Box C-40, the Acid Recycle Tank (VES-NCR-171), the Acid Head Tank (VES-NCR-173), and the Process Condensate Collection Tank (VES-WL-150) are included in Appendix D-2 of the original application. These systems were installed and tested per approved construction packages.

P.E. certification of IWTU design has been transmitted to DEQ as a separate submittal.

D-2c Dimensions and Capacity of Each Tank [IDAPA 58.01.05.012; 40 CFR 270.16(b)]

PEWE Tanks

Table D-1 lists the tank numbers and descriptions, the year operations began, materials of construction, and the design standards used for the tanks in the PEWE system. Many of the tanks were constructed to the current American Petroleum Institute (API) Standard or American Society of Mechanical Engineers (ASME) Section VIII standards of that time period, or qualified later as such, but were not stamped as such. Table D-1 identifies which tanks were certified.

Because the liquid waste solutions processed through the PEWE system are acidic (primarily nitric acid), the tank materials of construction were selected on the basis of their ability to withstand corrosive attack by acidic nitrate solutions in the temperature range from ambient to boiling. Even at boiling temperatures, the stainless steel used is resistant to attack by acidic nitrate solutions.

Additionally, the relatively large quantities of nitric acid in the waste solutions in the PEWE system form a passive layer on the stainless steel in the tanks, thus minimizing the corrosion rates on the tanks.

Table D-1. PEWE Tanks.

Tank Number/ Description	Year of Operation	Materials of Construction	Design Standards
VES-WL-132 Evaporator Feed Sediment	1983	Nitronic 50	ASME Section VIII Stamped
VES-WL-133 Evaporator Feed Collection	1983	Nitronic 50	ASME Section VIII Stamped
VES-WL-102 Surge Tank For VES-WL-133	1951	Type 347 SS	See Note *
VES-WL-109 Evaporator Head	1953	Type 347 SS	See Note *
VES-WL-129 Evaporator	1985	Nitronic 50	ASME Section VIII Stamped
VES-WL-161 Evaporator	1984	Nitronic 50	ASME Section VIII Stamped
VES-WL-131 Condensate Surge	1975	Type 304L SS	Unknown
VES-WL-134 Condensate Surge	1984	Type 304L SS	ASME Section VIII Stamped
VES-WL-111 Bottoms Collection	2001	Type 304L SS	ASME Section VIII Stamped
VES-WL-101 Bottoms Collection	1951	Type 347 SS	See Note *
VES-WM-100 CPP-604 TFT	1953	Type 347 SS	See Note *
VES-WM-101 CPP-604 TFT	1953	Type 347 SS	See Note *
VES-WM-102 CPP-604 TFT	1953	Type 347 SS	See Note *
VES-WL-106 Process Condensate Collection Tank	1953	Type 347 SS	See Note *
VES-WL-107 Process Condensate Collection Tank	1953	Type 347 SS	See Note *
VES-WL-108 Process Condensate Knock-out Pot	1951	Type 347 SS	See Note *
VES-WL-163 Process Condensate Collection Tank	1984	Type 304L SS	ASME Section VIII Division 1
VES-WL-135	1991	Type 304L SS	ASME Section VIII Division 1
VES-WL-136	1991	Type 304L SS	ASME Section VIII Division 1
VES-WL-137	1991	Type 304L SS	ASME Section VIII Division 1
VES-WL-138	1991	Type 304L SS	ASME Section VIII Division 1
VES-WL-139	1991	Type 304L SS	ASME Section VIII Division 1
VES-WL-142	1991	Type 304L SS	ASME Section VIII Division 1
VES-WL-144	1991	Type 304L SS	ASME Section VIII Division 1
VES-WL-150	1996	Type 304L SS	ASME Section VIII Division 1

Note *: Due to the age of these tanks, no documentation exists to confirm standards. Conversation with the vendor indicates the tanks were built to API or to ASME Standards. It is common practice for the vendor to maintain the documentation for 20 years.
Note **: Not Stamped – Built to ASME Section VIII. No code stamp required.

Evaporator Feed Sediment Tank, VES-WL-132

VES-WL-132 is a flow-through vertical, cylindrical tank with domed ends. It measures 7 ft 9 in. from tangent to tangent, and has a 9-ft outside diameter. The tank has an approximate capacity of 4,700 gal. An internal baffle and weir system forces the water to drop particles before flowing out of the tank. Diagram 096156 in Appendix III of this permit depicts VES-WL-132.

Evaporator Feed Collection Tank, VES-WL-133

VES-WL-133 is a horizontal, cylindrical tank with domed ends. It has a 10-ft outside diameter, and measures 30 ft long from tangent to tangent. The tank has an approximate capacity of 19,000 gal. Diagram 096156 in Appendix III of this permit depicts VES-WL-133.

VES-WL-102

VES-WL-102 is a surge tank for VES-WL-133. It is a horizontal, cylindrical tank with domed ends. It has a 10-ft outside diameter, and measures 30 ft long from tangent to tangent. The tank has an approximate capacity of 18,400 gal. Diagram 096156 in Appendix III of this permit depicts VES-WL-102.

Process Offgas Condensate Knock-Out Pot, VES-WL-108

VES-WL-108 is the Process Offgas Condensate Knock-Out Pot in the offgas system. It is a vertical cylindrical tank with domed ends. It has a 24-in. outside diameter and measures 32 in. from tangent to tangent. The tank has an approximate capacity of 100 gals. Diagram 094276 Sheet 3 in Appendix III of this permit depicts this tank.

Condensate Surge Tank VES-WL-134

Tank VES-WL-134 is a vertical, cylindrical tank with domed ends. It has a 3 ft 6 in.-outside diameter and is 7 ft long from tangent to tangent. The tank has an approximate capacity of 500 gal. Diagram 094276, Sheet 3 in Appendix III of this permit depicts VES-WL-134.

Bottoms Collection Tank, VES-WL-101

VES-WL-101 is a horizontal-oriented, cylindrical tank with domed ends, measuring 10 ft by 30 ft. The tank has an approximate capacity of 18,400 gal. Diagram 096156 in Appendix III of this permit depicts VES-WL-101.

Bottoms Collection Tank, VES-WL-111

VES-WL-111 is designed as a rectangular, horizontal-oriented tank. It measures 12 ft long, 4 ft 8 in. wide, and 3 ft 6 in. high. The tank has an approximate capacity of 1,500 gal. Diagram 094276, Sheet 2 in Appendix III of this permit depicts VES-WL-111.

Evaporator Head Tank, VES-WL-109

VES-WL-109 is a vertical, cylindrical tank with domed ends. It has a 3-ft outside diameter, and measures 5 ft from tangent to tangent. The tank has an approximate capacity of 270 gal. Diagram 094276, Sheet 1 in Appendix III of this permit depicts VES-WL-109.

Evaporators VES-WL-129 and VES-WL-161

VES-WL-129 and VES-WL-161 are vertical cylindrical tanks with domed ends. The tanks have a 3-ft diameter and are 14 ft 9 in. long, from tangent to tangent. Both evaporators have an approximate capacity of 1,000 gal each. Diagram 094276, Sheet 1 in Appendix III of this permit depicts VES-WL-129 and VES-WL-161.

Condensate Surge Tank VES-WL-131

VES-WL-131 is a horizontal, cylindrical tank with domed ends. It has a 2-ft outside diameter and measures 2 ft 9 in. from tangent to tangent. The tank has an approximate capacity of 66 gal. Diagram 094276, Sheet 3 in Appendix III of this permit depicts VES-WL-131.

CPP-604 Process Condensate Collection Tanks, VES-WL-106, VES-WL-107, and VES-WL-163

Tanks VES-WL-106, VES-WL-107 and VES-WL-163 are vertical-oriented cylindrical tanks with domed ends. The tanks are each approximately 12 ft long and have an 8 ft diameter. The tanks have an approximate capacity of 5,000 gal each. Diagram 094276, sheet 3 in Appendix III of this permit depicts the tanks.

CPP-604 TFT, VES-WM-100, VES-WM-101, VES-WM-102

VES-WM-100, VES-WM-101, and VES-WM-102 are horizontal-oriented, cylindrical tanks with domed ends. All three tanks have an outside diameter of 10 ft and are 30 ft from tangent to tangent. Each tank has an approximate capacity of 18,400 gal. Diagram 103308 in Appendix III of this permit depicts these tanks.

VES-WL-135, VES-WL-136, VES-WL-137, VES-WL-138, VES-WL-139, VES-WL-142, and VES-WL-144 Process Waste Liquid (PWL) Tanks

Tanks VES-WL-135, VES-WL-136, VES-WL-139, and VES-WL-142 are vertical-oriented cylindrical tanks with domed ends. The tanks have approximately a 1 ft 6 in.-diameter and are approximately 8 in. from tangent to tangent. The tanks have an approximate capacity of 10 gal. Tanks VES-WL-137, VES-WL-138, and VES-WL-144 are vertical-oriented cylindrical tanks with domed ends. The tanks have approximately a 2 ft diameter and are approximately 1 ft from tangent to tangent. The tanks have an approximate capacity of 25 gal. Diagrams 368921, 368922, 368923, 368924, 368925, 368927, 368929, 368930, and 368931 in Appendix III of this permit depict the PWL tanks.

VES-WL-150 Tank

Tank VES-WL-150 is a vertical-oriented cylindrical tank with domed ends. The tank has approximately a 2 ft diameter and is approximately 2 ft from tangent to tangent. The tank has an approximate capacity of 50 gal. Diagram 179009 in Appendix III of this permit depicts the tank.

LET&D Tanks

This section provides the LET&D tank numbers, the year each tank was placed into service, the materials of construction, and the design standards. Table D-2 summarizes the LET&D tanks.

Fractionator Waste Feed Head Tank VES-WLK-197

The Acid Fractionator Waste Feed Head Tank is a horizontal tank with domed ends. The tank has an approximate 3-ft diameter and is 4 ft from tangent to tangent. The maximum capacity of the tank is 270 gal. The tank is located approximately 16 ft above the highest feed point of Acid Fractionator FRAC-WLL-170 or FRAC-WLK-171. Waste solutions are pumped from the Process Condensate Collection Tanks to this tank. This tank gravity feeds the fractionators. Diagram 356596, Sheet 10 in Appendix III of this permit depicts VES-WLK-197.

Acid Fractionators FRAC-WLL-170 and FRAC-WLK-171

The two acid fractionators are identical thermal siphon units, with an inside diameter of 42 in. and a height of approximately 24 ft from tangent to tangent. Both units consist of vertical-oriented, cylindrical tanks, with domed ends. The fractionator, associated equipment, and piping have a maximum capacity of 460 gallons. Hastelloy G-30 is used for equipment and piping in contact with the hot acid because of its strength and resistance to the corrosive solution. The fractionators separate the waste solution into water (overheads) and nitric acid (bottoms). Diagram 356596, Sheets 5 and 8 in Appendix III of this permit depict FRAC-WLL-170 and FRAC-WLK-171, respectively.

Table D-2. LET&D Tanks

Tank Number/ Description	Year of Operation	Materials of Construction	Design Standards
VES-WLK-197	1993	Type 304L SS	ASME Section VIII Division 1
VES-WLL-170	1993	Hastelloy G-30	ASME Section VIII Division 1
VES-WLK-171	1993	Hastelloy G-30	ASME Section VIII Division 1
VES-WLL-195	1993	Type 304L SS	ASME Section VIII Division 1
VES-NCR-171	1995	Type 304 SS	ASME Section VIII Division 1
VES-NCR-173	1995	Type 304L SS	Fabricated per Project Drawings

Acid Fractionator Bottoms Tank VES-WLL-195

The Bottoms Tank is a horizontal-oriented, cylindrical tank with domed ends. The tank has an inner diameter of 36 in. and a length of 4 ft from tangent to tangent. The maximum capacity of the tank is 270 gal. This tank stores nitric acid intended for use in the INTEC waste treatment processes. Diagram 356596, Sheet 3 in Appendix III of this permit depicts VES-WLL-195.

LET&D Nitric Acid Recycle Tank VES-NCR-171

The Acid Recycle Tank is a horizontal, cylindrical tank, 11 ft in diameter and 33 ft 8 in. long from end to end. The tank has a maximum capacity of 22,500 gal. This tank stores nitric acid intended for use in NWCF debris treatment, the filter leach process, and decontamination activities. Diagram 176274 in Appendix III of this permit depicts VES-NCR-171.

Nitric Acid Head Tank VES-NCR-173

The Nitric Acid Head Tank is a vertical cylindrical tank with flat ends. It has a 24-in. outside diameter and measures approximately 56 in. from end to end. It is constructed from 300 series stainless steel. The tank has an approximate capacity of 90 gallons. Diagram 176274 in Appendix III of this permit depicts VES-NCR-173.

ETS Tanks

This section provides the ETS tank numbers, the year each tank was placed into service, the materials of construction, and the design standards. Table D-3 summarizes the ETS tanks.

Table D-3. ETS Tanks.

Tank Number/ Description	Year of Operation	Materials of Construction	Design Standards
VES-NCC-101	1982	Nitronic 50	ASME Section VIII Division 1*
VES-NCC-102	1982	Nitronic 50	ASME Section VIII Division 1*
VES-NCC-103	1982	Nitronic 50	ASME Section VIII Division 1*
VES-NCC-119	1982	Nitronic 50	ASME Section VIII Division 1*
VES-NCC-122	1982	Nitronic 50	ASME Section VIII Division 1*
VES-NCC-150	1996	G-30 Hastelloy	ASME Section VIII Division 1
VES-NCC-152	1996	Nitronic 50	ASME Section VIII Division 1
VES-NCC-108	1982	Nitronic 50	ASME Section VIII Division 1*
VES-NCC-136	1982	Type 304 SS	ASME Section VIII Division 1*
VES-NCC-116	1982	Type 304 SS	ASME Section VIII Division 1*

Note *: Not Stamped – Built to ASME Section VIII. No code stamp required.

Blend Tank VES-NCC-101

The Blend Tank (VES-NCC-101) has an approximate diameter of 9 ft 6 in. and a height of 13 ft. It is a vertical, cylindrical tank with domed ends. The approximate capacity of the tank is 5,870 gallons. However, an overflow outlet 8.5 ft above the bottom tangent limits the operating volume to approximately 5,000 gallons. Diagram 133410 in Appendix III depicts VES-NCC-101.

Hold Tanks VES-NCC-102 and VES-NCC-103

The Hold Tanks (VES-NCC-102 and VES-NCC-103) have an approximate diameter of 8 ft and a height of 12 ft. These vertical cylindrical tanks are equipped with domed ends. The approximate capacity of each tank is 4,000 gallons. Each tank has an overflow outlet 8.5 ft above the tank bottom tangent. The overflow outlet limits the operating volume of each tank to approximately 3,500 gallons. Diagram 133411 and 133412 in Appendix III depicts VES-NCC-102 and VES-NCC-103 respectively.

Fluoride Hot Sump Tank VES-NCC-119

The Fluoride Hot Sump Tank (VES-NCC-119) is a horizontal, cylindrical tank with domed ends. It has an approximate diameter of 9 ft and a length of 16 ft. The tank has an approximate capacity of 6,500 gallons. Diagram 133409 in Appendix III depicts VES-NCC-119.

Non-fluoride Hot Sump Tank VES-NCC-122

The Non-fluoride Hot Sump Tank (VES-NCC-122) is a horizontal cylindrical tank with domed ends. It has an approximate diameter of 7 ft 6 in. and a length of 14 ft. The tank has an approximate capacity of 4,300 gallons. Diagram 133408 in Appendix III depicts VES-NCC-122.

VES-NCC-150

The evaporator consists of a flash column and a reboiler. The Flash Column (VES-NCC-150) has an approximate diameter of 5 ft 6 in. and a height of 21 ft 6 in. from bottom to the top 14 in. flange. This tank is vertical and cylindrical with domed ends. The approximate capacity of the tank is 2,600 gallons. Diagram 134251 Sheet 2 in Appendix III depicts EVAP-NCC-150.

Constant Head Feed Tank VES-NCC-152

The Constant Head Feed Tank (VES-NCC-152) has an approximate diameter of a 2 ft and a length of 9 ft. The tank is horizontally oriented, cylindrical and has domed ends. A feed outlet to VES-NCC-150 is centered at the bottom of one end of the tank. The approximate capacity of the tank is 200 gallons. VES-NCC-152 has an overflow line back to VES-NCC-101, which limits capacity to approximately 170 gallons. Diagram 134251 Sheet 3 in Appendix III depicts VES-NCC-150.

Scrub Hold Tank VES-NCC-108

The scrub hold tank (VES-NCC-108) is a horizontal, cylindrical tank with domed ends, an approximate diameter of 5 ft and a length of 12 ft. The capacity at overflow is approximately 2,000 gal. Diagram 133424 in Appendix III depicts VES-NCC-108.

Vent Condenser Knockout Drum VES-NCC-136

The vent condenser knockout drum (VES-NCC-136) is a vertical, cylindrical vessel with domed ends, an approximate 16 in. diameter and 6 ft in height. The approximate capacity of the tank is 60 gallons. Diagram 133428 in Appendix III depicts VES-NCC-136.

Mist Collector VES-NCC-116

The mist collector (VES-NCC-116) is a vertical, cylindrical vessel with domed ends, an approximate 3 ft 6 in. diameter and 7 ft 6 in. in height. It is designed to remove any liquid from the

process and vessel offgas mixture entering the vessel. The approximate capacity of the tank is 500 gallons. Diagram 133428 in Appendix III depicts VES-NCC-116.

IWTU Tanks

Table D-4 lists the tank numbers and descriptions, the approximate year operations will begin, materials of construction, and the design standards used for the tanks in the IWTU. The tanks are constructed to the current American Society of Mechanical Engineers (ASME) Section VIII standards of that time period. Table D-4 identifies which tanks were certified.

Because the liquid waste solutions processed through the IWTU are highly acidic (primarily nitric acid), the tank materials of construction were selected on the basis of their ability to withstand corrosive attack by acidic nitrate solutions and acidic atmospheres in the IWTU operating temperature ranges. The materials of construction were evaluated by an independent professional engineer and were determined to be appropriate for the waste and conditions of service as noted in RCRA Design Assessment and Certification of the IWTU.

Waste Feed Tank VES-SRC-131

The Waste Feed Tank is a vertical, cylindrical tank with domed ends, with an approximate diameter of 6 ft 1 in. and 10 ft in height. It is designed as the feed tank to the DMR. The approximate capacity of the tank is 2,170 gallons. Diagram 632760 in Appendix III depicts VES-SRC-131.

Steam Reforming System

The DMR is a vertical, cylindrical vessel with a domed top, a top expansion section that is approximately 5 ft 8 in. in diameter, a reducer mid section, lower fluidized bed section that is 4 ft in diameter, and a total height of approximately 18 ft 9 in. The bottom of the reformer is cone-shaped. It is designed to convert the liquid waste to a solid treatment product that is suitable for disposal at the ultimate disposal facility. The approximate capacity of the vessel is approximately 3,400 gallons. Diagram 632762 in Appendix III depicts VES-SRC-140.

Table D-4. IWTU Tanks

Tank Number Description	Expected Year of Operation	Materials of Construction	Design Standard(s)
VES-SRC-131 Waste Feed Tank	2011	Type 304L SS	ASME Section VIII Division 1*
VES-SRC-140 Denitration and Mineralization Reformer	2011	Haynes 556 Alloy	ASME Section VIII Division 1*
VES-SRC-160 Carbon Reduction Reformer	2011	Carbon Steel and Alumina/Chrome Oxide Based Refractory Lined	ASME Section VIII Division 1*
VES-SRC-190 and -191 Product Receivers/Coolers	2011	Type 316H SS	ASME Section VIII Division 1*
TK-SRE-196 Fire Water Collection Tank	2011	Carbon Steel (Double Wall)	N/A
TK-SRH-141	2011	Polypropylene	ASTM F2389-07E1 or D4101-08

Note *: Not Stamped – Built to ASME Section VIII. No code stamp required.

The Process Gas Filter is a vertical cylindrical vessel with a domed top and conical bottom. It is approximately 8 ft 9 in. in diameter and 7 ft 9 in. high tangent to tangent. The conical bottom is approximately 8 ft 9 in. on top and tapering to 1 ft 6 in. on the bottom in diameter and 10 ft. high. The over all height of the filter vessel is approximately 19 ft 6 in. The filter is designed to remove particulate matter from the DMR offgas. The approximate capacity of the vessel is 2,300 gallons. Diagram 632763 in Appendix III depicts F-SRC-153.

The CRR is a vertical, cylindrical vessel with domed ends. The upper portion of the reformer is approximately 6 ft 4 in. in diameter. The lower portion of the reformer is approximately 4 ft 6 in. in diameter and a total of 24 ft 4 in. in height. It is designed to treat the process gas from the DMR and destroy the residual NOx and organics. The approximate capacity of the vessel is approximately 4,300 gallons. Diagram 632764 in Appendix III depicts VES-SRC-160.

The Offgas Cooler is a vertical, cylindrical vessel with domed top and conical bottom. It is approximately 8 ft in diameter and total height of 16 ft 8 in. It is designed to cool the offgas from the

CRR. The approximate capacity of the vessel is 2,300 gallons. Diagram 636766 in Appendix III depicts COL-SRC-160.

The Offgas Filter is a vertical cylindrical vessel with a domed top and conical bottom. It is approximately 8 ft 9 in. in diameter and 7 ft 9 in. high tangent to tangent. The conical bottom is approximately 8 ft 9 in. on top and tapering to 1 ft 6 in. on the bottom in diameter and 10 ft. high. The overall height of the filter vessel is approximately 19 ft 6 in. The filter is designed to remove particulate matter from the CRR offgas. The approximate capacity of the vessel is 3,250 gallons. Diagram 632765 in Appendix III depicts F-SRC-160.

The Mercury Adsorbers are identical vertical vessels with domed ends. They are approximately 12 ft in diameter and 15 ft 6 in. tall with an active bed depth of approximately 6 ft 6 in. deep and each contains a sulfur-impregnated granular activated carbon (GAC) bed. The adsorbers are designed to remove mercury from the offgas stream. The approximate capacity of the vessels is approximately 11,600 gallons each. Diagram 632798 in Appendix III depicts F-SRH-141A and B.

The Product Receiver/Coolers are vertical, cylindrical tanks with a domed top and cone-shaped bottom. They are approximately 4 ft in diameter and 7 ft 9 in. in height. The tanks are designed to receive and cool solids from the IWTU system and provide storage capacity until enough is stored to fill the canisters. The approximate capacity of each tank is 512 gallons. Diagrams 632787 and 632788 in Appendix III depict VES-SRC-190/191, respectively.

The Product Receiver Filter is a vertical, cylindrical vessel with a domed top and cone-shaped bottom. It is approximately 4 ft 6 in. in diameter and 8 ft 9 in. in height. The filter is designed to remove solids from the nitrogen gas used as the transfer and cooling gas in the cooling loop, collect them in the bottom cone section of the filter, and transfer the solids to the Product Receiver Filter Product Pump, VES-SRC-180. The approximate capacity of the filter vessel is 900 gallons. Diagram 632790 in Appendix III depicts F-SRC-191.

The Product Handling Vacuum Filter is a vertical, cylindrical vessel with a domed top and cone-shaped bottom. It is approximately 4 ft 5 in. in diameter and 8 ft 9 in. in height. The filter is designed to remove solids from the vacuum flow used to draw air and potential product spills away from the canisters and into a collection system. The approximate capacity of the filter vessel is 900 gallons. Diagram 632791 in Appendix III depicts F-SRC-190.

The Fire Water Collection Tank is a horizontal, cylindrical tank with domed ends. It is approximately 32 ft long and 9 ft in diameter. It is a double-walled tank with leak detection and equipped with the ability to remove liquid from the annulus. It is used to collect fire water from the Process and Building HEPA Filters and the Mercury Adsorbers during a fire incident. The approximate capacity of the tank is 15,000 gallons. Diagram 632822 in Appendix III depicts TK-SRE-196.

The Offgas Condensate Collection Tank is a double walled, horizontal, rectangular tank. It is approximately 4 ft x 2 ft x 2 ft in dimension. It is used to collect condensate from the stack and off-gas sampling equipment. The approximate capacity of the tank is 120 gallons. Diagram 632799 in Appendix III depicts TK-SRH-141.

D-2d Description of Feed Systems, Safety Cutoffs, Bypass Systems, and Pressure Controls [IDAPA 58.01.05.012; 40 CFR 270.16(c)]

Table D-5. Tank Inputs & Outputs

TANK NUMBER/ DESCRIPTION	DRAWING NUMBER	INPUTS	OUTPUTS
VES-NCR-171 Acid Recycle Tank	176274	Pumped	Air-Lifted
VES-NCR-173 Acid Recycle Head Tank	176274	Air-Lifted	Gravity
VES-WL-101 Bottoms Collection	096156	Gravity, Jetted, Pumped	Jetted
VES-WL-102 Surge Tank for VES-WL-133	096156	Gravity	Pumped
VES-WL-106 Process Condensate Collection Tank	094276-3	Pumped	Gravity/Pumped
VES-WL-107 Process Condensate Collection Tank	094276-3	Pumped	Pumped/Gravity
VES-WL-108 Waste Evaporator Condensate Knock-out Pot	094276-3	Offgas Condensate	Gravity
VES-WL-109 Evaporator Feed	094276-1	Jetted, Pumped	Gravity
VES-WL-111 Bottoms Collection Tank	094276-2	Gravity, Jetted, Pumped	Jetted
VES-WL-129 Evaporator	094276-1	Pumped	Gravity
VES-WL-131 Condensate Surge Tank	094276-3	Gravity	Pumped
VES-WL-132 Evaporator Feed Sediment Tank	096156	Jetted, Pumped	Gravity, Jetted
VES-WL-133 Evaporator Feed Collection Tank	096156	Gravity	Jetted, Pumped
VES-WL-134 Condensate Surge Tank	094276-3	Gravity	Pumped
VES-WL-135 Sump Tank	368921	Gravity	Jetted
VES-WL-136 Process Condensate Collection Tank	368922	Gravity	Jetted
VES-WL-137 Process Condensate Collection Tank	368923	Gravity	Jetted
VES-WL-138 Process Condensate Collection Tank	368924	Gravity	Jetted
VES-WL-139 Process Condensate Collection Tank	368925	Gravity	Jetted

Table D-5. Tank Inputs & Outputs (continued)

TANK NUMBER/ DESCRIPTION	DRAWING NUMBER	INPUTS	OUTPUTS
VES-WL-142 Process Condensate Collection Tank	368927	Gravity	Jetted
VES-WL-144 Process Condensate Collection Tank	368929	Gravity	Jetted
VES-WL-150 Process Condensate Collection Tank	096156	Jetted/Gravity	Jetted
VES-WL-161 Evaporator	094276-1	Gravity	Gravity
VES-WL-163 Process Condensate Collection Tank	094276-3	Pumped	Gravity
VES-WLK-171 Acid Fractionator	356596-8	Gravity	Gravity
VES-WLK-197 Fractionator Waste Feed Head Tank	356596-10	Pumped	Gravity
VES-WLL-170 Acid Fractionator	356596-5	Gravity	Gravity
VES-WLL-195 Acid Fractionator Bottoms Tank	356596-3	Gravity	Pumped
VES-WM-100 CPP-604 TFT	057498	Gravity, Jetted, Pumped	Jetted
VES-WM-101 CPP-604 TFT	057498	Gravity, Jetted, Pumped	Jetted
VES-WM-102 CPP-604 TFT	057498	Gravity, Jetted, Pumped	Jetted
VES-NCC-152 Constant Head Feed Tank	13425103	Air-Lifted	Gravity
VES-NCC-150	13425102	Gravity	Gravity, Jetted
VES-NCC-101 Blend Tank	133410	Gravity, Jetted, Air-Lifted, Pumped	Gravity, Air-Lifted, Jetted
VES-NCC-102 Hold Tank	133411	Gravity, Jetted, Pumped	Gravity, Jetted
VES-NCC-103 Hold Tank	133412	Gravity, Jetted, Pumped	Gravity, Jetted
VES-NCC-119 Fluoride Hot Sump Tank	133409	Gravity, Jetted, Pumped	Jetted, Pumped
VES-NCC-122 Non-Fluoride Hot Sump Tank	133408	Gravity, Jetted, Pumped	Jetted
VES-NCC-108 Scrub Hold Tank	133424	Gravity	Jetted
VES-NCC-136 Vent Condenser Knock Drum	133428	Offgas Condensate	Gravity
VES-NCC-116 Mist Collector	133428	Offgas Condensate	Gravity
VES-SRC-131 Waste Feed Tank	632760	Gravity, Jetted, Pumped	Pumped, Jetted

Table D-5. Tank Inputs & Outputs (continued)

TANK NUMBER/ DESCRIPTION	DRAWING NUMBER	INPUTS	OUTPUTS
VES-SRC-140 Denitration and Mineralization Reformer	632762	Pumped, Gravity	Auger/Grinder, Pneumatic, Process Gas/Particulate
VES-SRC-160 Carbon Reduction Reformer	632764	Offgas, Gravity	Auger/Grinder, Pneumatic (nitrogen), Offgas
VES-SRC-190/191 Product Receiver/Coolers	632787, 88, & 89	Pneumatic	Gravity
TK-SRE-196 Fire Water Collection Tank	632822	Gravity	Portable Pump
TK-SRH-141 Off-gas Condensate Collection Tank	632799	Gravity	Pumped

PEWE Feed Systems

The piping systems that feed to the PEWE system are designed to slope downward to the PEWE Feed Sediment and Feed Collection Tanks. Wastes flow by gravity or are jetted or pumped to VES-WL-132 or VES-WL-133.

Wastes passing through VES-WL-132 encounter a baffle and weir system, which allows time for solids to settle out of the solution, as the fluid flows under the baffle and over the weir. Waste in VES-WL-132 overflows to VES-WL-133.

From VES-WL-133, waste is pumped by one of two feed pumps either directly to EVAP-WL-129 or to Evaporator Head Tank VES-WL-109, which gravity-feeds to EVAP-WL-161. Additionally, a jet is available to transfer waste from VES-WL-133 to VES-WL-109.

The liquid flow to the evaporators is regulated by feed valves, which are controlled by level recorders/controllers in the control room. The feed valve for EVAP-WL-129 is located between the feed pumps and the evaporator. The feed valve for EVAP-WL-161 is located between Evaporator Head Tank, VES-WL-109, and the evaporator. Evaporator Head Tank VES-WL-109 will overflow back to VES-WL-102 or VES-WL-133.

The PWL tanks and sumps are located in CPP-604, CPP-649, and associated valve boxes. The purpose of the system is to collect offgas condensate and liquids from floor drains via gravity, and then

transfer the waste to the PEWE Evaporator Feed Collection Tank, VES-WL-133. The system is comprised of tanks VES-WL-135, -136, -137, -138, -139, -142, -144, and -150. A sump or vault secondarily contains each of the tanks. The tanks and sumps are jetted upon high level detection. All are transferred into a common header and then transferred into VES-WL-133, except for VES-WL-150, which is transferred into the Evaporator Feed Sediment Tank, VES-WL-132. VES-WL-132 drains directly into VES-WL-133.

PEWE Safety Cutoffs

The instruments for the PEWE system are located on control panels and the Distributed Control System (DCS) in the Waste Processing Control Room. The control panels consist of instruments and alarms to detect system upsets. The DCS operating consoles display data from the instrumentation and transmit control actions, alarms, and shutoffs of the process control unit.

The DCS monitors and controls processes in the ILWMS. These processes include the LET&D, Service Waste, PEWE, Process Offgas (POG), Atmospheric Protection System (APS), PWL, VOG, and Main Stack Monitor processes or systems. The DCS is a microprocessor-based control system that uses a combination of free-standing operator consoles networked to electronic I/O interfaces to field devices.

To ensure a high degree of integrity, redundancy is used where possible. These include redundant controllers, power supplies, communications modules, consoles, and data highway cabling. This redundancy, along with utilization of equipment only from a vendor with documented previous experience of providing successful complex process control systems, and adherence to the vendor's recommended preventive maintenance practices provide the necessary assurance of reliability for meeting the requirements of EPA regulations, Technical Specifications/Standards, and plant mission.

Examples of other instruments that are monitored by the DCS include steam flow, water flow, instrument air pressure, and differential pressure across the HEPA filters.

The PEWE is manually shut down by the operator when the evaporator reaches a temperature of 108° C. This process includes eliminating the feed and isolating the steam supply to the reboiler. A temperature of 186° C is the theoretical threshold PEWE evaporator process temperature, at which under only the most “favorable” conditions, a potentially explosive self-sustaining tributyl phosphate (TBP)-nitric acid reaction could occur. To provide a significant margin of safety, 130° C is established as the safety limit to ensure that an explosion due to the rapid decomposition of organic nitrated complexes cannot occur under any circumstances. A limiting control setting of 120° C is set to ensure that the

130° C temperature is never reached. As an added measure of safety, INTEC Waste Operations has established the operating limit of 110° C, to further minimize the possibility of an organic-nitric acid explosion. Upon reaching the evaporator process temperature of 110° C, the system alarms and undergoes automatic steam shutoff if the process has not already been halted manually, via the DCS for VES-WL-129 & VES-WL-161. Automatic safe shutdown at 110° C not only eliminates the possibility of an organic-nitric acid explosion, but also serves to limit scale formation in the evaporator reboiler.

On high temperature alarm, the steam to the reboiler is automatically shut off. As the boiling action stops, the level controllers shut off the feed. The air system controllers maintain a positive pressure on the shell (steam) side of the reboiler to prevent waste from entering the steam condensate system, in the event there is a leak in the reboiler tube bundle.

The Bottoms Collection Tanks, VES-WL-101 and VES-WL-111, are monitored from the DCS to control liquid volume and leak detection. Each tank has a high level alarm to alert operators before the tank overfills.

The ILWMS is monitored and controlled by the DCS. As part of the DCS, the field instrumentation interfaces to electronic hardware in process control unit cabinets. Operating consoles located in the Waste Processing Control Room display data from the instrumentation and transmit control actions to the process control unit. The consoles interface to the process control units over a system network.

The conditions that require operator response include high and low level in the evaporator, high temperature, high density, lack of feed, and/or loss of utilities.

The PWL tanks and sumps are considered part of the PEWE collection system. The tanks and sumps have high level alarms that, upon activation, are jetted to the appropriate tank. The tanks and sumps are monitored by the DCS located in the Waste Processing Control Room.

VES-WL-132, VES-WL-133, VES-WL-102, VES-WL-106, VES-WL-107, and VES-WL-163 all have high level alarms. VES-WL-109 has an overfill line that drains back to tanks VES-WL-133 or VES-WL-102. Upon high level alarm, the condition is investigated and appropriate action taken.

PEWE Bypass Systems

Waste can be transferred through the evaporators to VES-WL-101 or VES-WL-111 without operating the evaporators. Such transfers may occur when:

- The evaporators are not operable due to scheduled maintenance activities or are in need of repairs

- The system requires testing following repairs or maintenance (this minimizes waste by not introducing new materials to the system)

- The PEWE Feed Tanks can be emptied to allow additional storage capacity during periods of system maintenance and/or testing.

In the unlikely event that VES-WL-132 was to completely fill, solids would be carried over into VES-WL-133. As VES-WL-132 approached its capacity, solids would be detected as a result of plugging in the vessel's instrument lines. VES-WL-132 would then be immediately bypassed, diverting feed solutions directly to VES-WL-133. Once full of solids, VES-WL-132 is designed to be remotely removed/replaced. The full sediment tank will be managed as a RCRA solid waste and disposed in accordance with all applicable regulations. However, if the solids content in PEWE feed remains low, the INL may elect not to install a new feed sediment tank.

There are no bypass systems associated with the PWL tanks and sumps. No safety or waste treatment issues are associated with an inability to bypass these tanks or sumps.

PEWE Pressure Controls

Waste treatment and storage vessels at INTEC are connected to a gaseous waste treatment system called the VOG system. All ILWMS storage and treatment systems discharge gases such as instrument air purges (used in level, density, and pressure instrumentation), air spargers (agitators), and gases displaced from a vessel when it fills with liquid.

Gases from the PEWE and other INTEC processes, such as the Tank Farm and CPP-659 vessels, vent to the CPP-604 VOG system. The CPP-604 VOG system consists of a mist eliminator, superheater, and HEPA filter banks. The mist eliminator and superheater are included to protect and extend the life expectancy of the HEPA filters.

Several facility process and vessel offgas systems, including the CPP-604 VOG system, combine in the Process APS located in CPP-649. The Process APS is a back-up system that treats the combined process and vessel offgas streams from CPP-604, Tank Farm, and the NWCF. The Process APS treatment consists of a mist eliminator, superheater, and HEPA filters. Next, the process and vessel offgases are routed to the INTEC Main Stack (CPP-708) where they mix with building ventilation air and

are exhausted to the atmosphere. The vessel and process offgas systems are maintained under a vacuum to control contamination. The system equipment and piping are fabricated from acid resistant stainless steel for corrosion resistance. Additionally, the Process Condensate Collection Tanks can be vented to the process condensate collection cells, which vent to the CPP-604 building ventilation system. The VOG and APS systems are described further in Attachment 1, Section D-8b of this permit.

Each PWL tank has an open vent line to prevent over pressurization.

CPP-604 TFT Feed Systems

Wastes are jetted or pumped to VES-WM-100. From VES-WM-100, waste may overflow to VES-WM-101, which in turn overflows to VES-WM-102. Additionally, each of the three tanks (VES-WM-100, VES-WM-101, and VES-WM-102) is equipped with a transfer jet that can transfer waste to a companion CPP-604 TFT system tank. A jet in VES-WM-100 transfers solution to VES-WM-102, a jet in VES-WM-102 transfers solution to VES-WM-101, and a jet in VES-WM-101 transfers solution to VES-WM-100. Additionally, each of the tanks can be jetted to the PEWE, the ETS, TFTs, or the TFF.

CPP-604 TFT Safety Cutoffs

If liquid accumulates in either of the two sumps associated with the CPP-604 TFT system, the accumulated liquid in the sump will initiate an alarm on the DCS. These sumps are equipped with steam jets to remove the liquid. Liquid accumulation in both sumps is jetted to the PEWE feed tanks or to the TFF.

The instruments for the CPP-604 TFT system tanks are monitored by the DCS from control panels in the Waste Processing Control Room. The instrumentation consists of instruments and alarms to detect system upset.

The purpose of the level drop alarms is to alert operators of potential leakage. The purpose of the high level alarms is to warn operators of the potential for tank overfilling. In the event of a level drop alarm or high level alarm for these tanks, the condition is investigated and appropriate action taken.

CPP-604 TFT Bypass Systems

The CPP-604 TFTs may be used to store dilute waste feed, concentrated evaporator bottoms, or for segregation of wastes. INTEC management decides on the type of waste stored in the tanks and the frequency of use based on plant operating conditions and needs. The CPP-604 TFTs may be used to segregate wastes based on chemical or radionuclide content. The CPP-604 TFTs can be used as surge tanks to store dilute evaporator feed solution should the normal feed collection be full or otherwise unable to receive additional waste. Likewise, the CPP-604 TFTs can also be used to store concentrated evaporator bottoms if the normal bottoms system is unable to receive waste. When used to segregate wastes or to store evaporator feed or bottoms solutions, the CPP-604 TFTs are used as surge tanks for additional waste storage. When surge capacity is not needed, the tanks may be bypassed. There are no safety or waste treatment issues associated with either using or bypassing the tanks.

CPP-604 TFT Pressure Controls

The CPP-604 TFT system tanks vent to the INTEC VOG System.

CPP-1618 LET&D Feed Systems

Waste accumulated in the condensation tanks at the PEWE is pumped directly to the Fractionator Waste Feed Head Tank, VES-WLK-197, in Fractionator Cell 1. The ancillary piping for VES-WLK-197 begins at the transfer pump from the PEWE overhead condensate tanks. From VES-WLK-197, the waste stream is gravity fed to either of the acid fractionators for treatment. There are no other feed systems for the LET&D.

Concentrated nitric acid recovered in the LET&D fractionators gravity drains to the Acid Fractionator Bottoms Tank, VES-WLL-195.

CPP-1618 LET&D Safety Cutoffs

The LET&D is operated from the DCS for waste side operations. The LET&D process control contains instrumentation and a control system to monitor process variables and provide for safe and efficient operation and shutdown of the process by remote control of process equipment. The control room is used to control both LET&D and PEWE process systems.

Conditions that may cause the fractionators to be shut down or feed to the fractionators to be discontinued are high and low level in the fractionator, low vacuum in the fractionator, low fractionator

differential pressure, high Tray 1 temperature, high separator level, high differential pressure across HEPA filters, lack of feed, and/or loss of utilities.

The systems that the DCS monitors and controls include PEWE waste transfers to the LET&D feed tank, fractionation, bottoms tank transfers to CPP-604 or the Acid Recycle Tank, and building ventilation. Indication of transfer to the Acid Recycle Tank is also provided in the NWCF control room.

VES-WLL-195 is equipped with a high level alarm. Upon high alarm the recovered nitric acid is transferred to VES-NCR-171, VES-WL-133, VES-WL-101, or the TFF.

CPP-1618 LET&D Bypass Systems

There are no bypass systems at the LET&D facility. No safety or waste treatment issues are associated with an inability to bypass this facility.

CPP-1618 LET&D Pressure Controls

The LET&D is vented to the Main Stack via its offgas system.

CPP-659 Annex Acid Recycle System (VES-NCR-171, VES-NCR-173) Feed Systems

VES-NCR-171 receives recovered nitric acid, which is pumped from VES-WLL-195 via the LET&D facility. The acid is then airlifted to VES-NCR-173 and distributed into a header for use elsewhere at the INTEC.

CPP-659 Annex Acid Recycle System Safety Cutoffs

VES-NCR-171 is equipped with a high level alarm. Transfers to the vessel are stopped when the high level alarm is reached. In the case of a high liquid level alarm, the condition will be investigated and appropriate action taken.

VES-NCR-173 is equipped with an overflow that returns the concentrated nitric acid to VES-NCR-171.

CPP-659 Annex Acid Recycle System Bypass Systems

There are no bypass systems associated with the Acid Recycle Tanks system. No safety or waste treatment issues are associated with an inability to bypass these tanks.

CPP-659 Annex Acid Recycle System Pressure Controls

VES-NCR-171 and VES-NCR-173 are vented to the NWCF VOG system.

CPP-659 ETS Feed Systems

The feed for the ETS is jetted from VES-NCC-101 to VES-NCC-152. The excess feed overflows back to VES-NCC-101. Feed from VES-NCC-152 is gravity fed to the evaporator (VES-NCC-150). The liquid level in the evaporator is controlled by a combination of a flow control valve located in the feed line and evaporation of the liquid.

CPP-659 ETS Safety Cutoffs

The ETS is operated from the DCS located in the control room, Building CPP-659. The ETS process control contains instrumentation and a control system to monitor process variables and provide for safe and efficient operation and shutdown of the process by remote control of process equipment.

The VES-NCC-150 is equipped with redundant thermo-wells at the following points:

- Bottom of VES-NCC-150.
- One foot above sparging airline.
- One foot below operating liquid level.
- Below the lower de-mister mesh.
- Above the upper de-mister mesh.

If any of the above points reach a high temperature, an alarm will sound on the DCS. At a high-high temperature alarm, the steam supply to HE-NCC-350 is automatically shut off. Steam supply to HE-NCC-350 is also automatically shut off if a low flow on the cooling water supply to HE-NCC-351 is detected.

The instrumentation for VES-NCC-150 liquid level and density is located on the DCS. The level instrument controls the level control valve on the feed line from VES-NCC-152. The level instrument will also sound an alarm if a high- or low-level is detected. The density instrument sounds an alarm when high density is indicated.

A flow control valve (remotely operated) and flow-sensing element are provided on the steam supply line to HE-NCC-350. The steam flow control valve and the level control valve are automatically

shut under the following conditions (with the provision that the listed shutdown conditions may be overridden if required to place the evaporator in a safe configuration):

- High-high alarm on any of the ten thermocouples on VES-NCC-150 as read on T150-1C through T150-10C (this cannot be overridden)
- High-high/low-low liquid level in VES-NCC-150 as read on L150-1C
- High density in VES-NCC-150 as read on D150-1C
- VES-NCC-150 high-high-pressure as read on P150-1C (this cannot be overridden)
- VES-NCC-351 low cooling water flow-rate as read on F351-1C
- Manual activation of Rapid Shutdown System (this cannot be overridden)

Shutdown conditions for any of the above will also activate an air pressure system on HE-NCC-350 except for loss of plant air. The air pressure system keeps a positive pressure on the HE-NCC-350 steam chest, preventing leaking from the HE-NCC-350 tubes into the steam side of the bundle.

CPP-659 ETS Bypass Systems

There are no bypass systems at the ETS. No safety or waste treatment issues are associated with an inability to bypass this facility.

CPP-659 ETS Pressure Controls

This unit is vented to the NWCF process offgas system. For more information regarding the NWCF process offgas system refer to Section D-8b.

CPP-1696 IWTU Feed Systems

The transfer line from the NWCF is secondarily contained in a stainless steel pipe. The IWTU Waste Feed Tank is provided with a bubbler type level instrument, L-C-131-2. The tank level is read on the DCS and automatically stops the waste feed pump when the waste level in the tank reaches the low-low level set point. The tank inlet valve, LV-SRC-131-003, will shut at the high-high level set point. The IWTU Waste Feed Tank is supplied with an overflow/vent to the cell sump. In addition to the tank level control logic, the waste feed pump is equipped with a variable speed drive and a current indicator to provide required flows and pressures. Each waste feed line is also equipped with a flow meter near the injector to allow monitoring of the feed rate of each line.

Feed pressure in each of the DMR injector feed lines is monitored and alarmed for high and low pressure on instruments located on the DCS to provide indication of plugging of the injector or line

break. If a high pressure alarm occurs, it is an indication that the associated waste feed injector may be plugged with solids. The waste feed injectors are provided with water and acid purge and nitrogen connections to allow the line to be pressurized with acid, water, or nitrogen to clear any built up solids in the injector, should this occur. If a low pressure alarm occurs, the waste feed to the DMR is stopped by closing the DMR feed valves. The waste feed pump will remain in tank recirculation mode.

CPP-1696 IWTU Safety Cutoffs

DMR

The DMR is provided with the following instrumentation to provide safe, reliable operation:

- Multiple pressure indication
- Multiple redundant temperature indication at different levels throughout the fluidized bed
- Redundant hydrogen monitors in the offgas

If the average bed temperature in the DMR drops below 580°C, the waste feed injection will be stopped.

If the average bed temperature increases above 700˚C, the waste feed injection and oxygen flow rates to the DMR are automatically stopped.

The DCS provides the average temperature of the DMR bed as measured by the operable in-bed thermocouples (a minimum of seven) as listed in Table D-8. If one of the in-bed thermocouples differs from the average temperature by more than 50°C, then corrective action will be taken, including as necessary:

- Checking the operability of the varying thermocouple;
- Modifying process parameters such as decreasing operating temperature, decreasing or isolating injection lines, and/or increasing the steam fluidizing gas rate to control any temperature variation in the fluidized bed;
- Decreasing or terminating the waste feed to the DMR;

- Replacing steam and oxygen fluidizing gas flow with nitrogen.

For IWTU purposes, average is defined as the mean temperature of the operable in-bed thermocouples as calculated by the DCS. When a thermocouple indication varies from the mean, the DCS will continue to use the data in its calculation of the average until such time that the thermocouple is determined to be inoperable and is taken out of service.

DMR pressure will normally float between 2 and 8 psig depending on the pressure losses in the Process Gas Filter and the CRR. If the pressure above the bed of the DMR exceeds 12 psig, an automatic waste feed cutoff will be initiated, and steam/oxygen fluidization will be isolated and the DMR will be purged with nitrogen at varying rates depending on process conditions.

The IWTU will be shut down if the nitrogen supply falls below five system volume equivalents, so that adequate nitrogen supply is available to supply nitrogen purge in the event of a system upset.

Process Gas Filter

The Process Gas Filter utilizes sintered metal filter elements arranged in groups for ease of installation and removal. The sintered filters are pulse-cleaned by high pressure nitrogen. The cleaning period is adjusted by monitoring the pressure drop across the Process Gas Filter during operation on the DCS.

CRR

The CRR is provided with the following instrumentation to provide safe, reliable operation:

- Multiple pressure indication
- Multiple redundant temperature indication at different levels throughout the bed
- Redundant oxygen monitors in the offgas

If the average bed temperature decreases below 775˚C, the waste feed injection to the DMR will be stopped and the DMR will be switched from steam to nitrogen fluidization.

If the average bed temperature increases above 1,150˚C, waste feed injection is automatically stopped.

The DCS provides the average temperature of the CRR bed as measured by the operable in-bed thermocouples (a minimum of 3) as listed in Table D-8. If one of the in-bed thermocouples differs from the average temperature by more than 50°C, then corrective action will be taken, including as necessary:

- Checking the operability of the varying thermocouple;
- Modifying process parameters such as decreasing operating temperature, decreasing or isolating injection lines, and/or increasing the steam fluidizing gas rate to control any temperature variation in the fluidized bed;
- Decreasing or terminating the waste feed to the DMR;
- Replacing steam and oxygen fluidizing gas flow with nitrogen.

In the event of a high-high offgas temperature alarm, the IWTU is shut down and the reformers and offgas system are purged with nitrogen.

If the pressure above the bed in the CRR exceeds 0 psig (0" water column vacuum), the liquid waste feed will be shutdown.

Offgas Cooler

To protect downstream equipment from above-design temperatures, emergency offgas cooling is provided by means of pressurized water surge tank which discharges water into the Offgas Cooler through the cooling spray nozzle located inside the Offgas Cooler. The Offgas Cooler Surge Water Tank provides approximately 200 gallons of storage.

Offgas Filter

The Offgas Filter utilizes sintered metal filter elements arranged in groups for ease of installation and removal. The sintered filters are pulse-cleaned by high pressure nitrogen. The cleaning period is adjusted by monitoring the pressure drop across the Offgas Filter during operation on the DCS.

Process HEPA Filters and Mercury Adsorbers

The total combined stream inlet temperature to the Process HEPA Filters is monitored. The IWTU will be shut down upon a low-low temperature alarm in this vent line.

Filter elements will be changed when pressure drop across the HEPA filter element exceeds 5" water column or when testing indicates loss of collection efficiency. To change filter elements the inlet and outlet dampers for the filter tier to be changed out are closed and the element replaced. This is repeated until all filters have been changed.

Thermocouples are provided in the supply and exhaust duct for the Mercury Adsorbers. The IWTU will be shut down if a high-high alarm set point of 180°C is reached at the inlet to the Mercury Adsorbers. If a low-low temperature alarm set point of 120˚C is reached the IWTU will be shut down or the Mercury Adsorber can be temporarily bypassed. If a high-high differential alarm set point is reached, the waste feed to the DMR will be stopped and the system is purged with nitrogen.

The Mercury Adsorbers are also bypassed by the Rapid Shutdown System (RSS) under the following conditions:

- There will be a time delay of 300 seconds before the Mercury Adsorbers are bypassed to ensure that all the Mercury in the system has passed through the Mercury Adsorbers prior to being bypassed. The following are on a time delay after an RSS trip:
    - High-High DMR Pressure
    - Low-Low DMR Fluidizing Gas Flow
    - Low-Low Oxygen Concentration in the CRR off-gas outlet
    - High-High Oxygen Concentration in the CRR off-gas outlet
    - Seismic Switch
    - Low-Low INTEC Supplied Compressed Air Pressure
    - Low-Low SBW Off-gas Blower Motors Current
    - Low-Low Process exhaust blower motors current
    - Loss of Pressure in Off-gas Cooler Surge Water Tank
    - Low-Low Liquid Level in Off-gas Cooler Surge Water Tank
    - High-High Off-gas Temperature after the Off-gas Cooler (after a 3 minute delay)
    - Manual Shutdown Switch
- The following are the RSS trips that are concerned with personnel safety and protecting equipment and require immediate bypass of the Mercury Adsorbers with no time delay:
    - Low-Low Temperature in the CRR
    - High-High CO at Outlet of Mercury Adsorber
    - High-High Temperature in Outlet Process HEPA Filter/Inlet to Mercury Adsorbers
    - Loss of Nitrogen
    - Low-Low DMR Fluidizing Gas Pressure
    - Loss of Electrical Power
    - Pressure Relief Valves Release DMR & Process Gas Filter
    - High-High-High DMR Pressure

- Low-Low DMR Pressure
- High-High-High CRR Pressure
- Pressure Relief Valve Activated Fluidizing Gas Superheater
- Pressure Relief Valve Activated Off-gas Cooler Outlet
- Pressure Relief Valve Activated HEPA Filter Inlet.

The above trips require immediate bypass of the Mercury Adsorbers to allow purging with nitrogen to prevent condensation or support fire suppression. The rest of the IWTU would be purged and cooled slowly to prevent thermal shock and possible failure of the equipment.

Product Receiver/Coolers and Cooling Loops

The Product Receiver Filter is continuously monitored for temperature with a thermocouple. The inlet pressure and outlet pressure is continuously monitored, and the differential pressure across the filter is calculated by the DCS. Upon high differential pressure the sintered metal filter elements are cleaned on-line using pulse nitrogen cleaning. Level detection is provided for the bottom cone of the filter. When the solids reach a predetermined value, the solids are transferred to the Product Receiver Filter Product Pump.

CPP-1696 IWTU Bypass Systems

The Mercury Adsorber has valves available to bypass the GAC beds in the event of a system upset. Feed is stopped prior to any GAC bed bypass stopping all mercury addition into the process gas system. Before a bypass of the Mercury Adsorbers occurs, sufficient time (approximately 5 minutes) will be allowed to elapse to ensure the process offgas is appropriately treated unless personnel safety or equipment concerns require immediate bypass of the GAC beds.

CPP-1696 IWTU Pressure Controls

The DMR operating pressure in the top of the bed will normally be maintained between 2 to 8 psig. If the pressure above the bed in the DMR exceeds 12 psig, an automatic waste feed cutoff will be initiated, and steam/oxygen fluidization will be isolated and the DMR will be purged with nitrogen. The DMR is a fully welded ASME pressure vessel and all removable connections are flanges equipped with high temperature gaskets. These controls assure no release of hazardous wastes or hazardous waste constituents from the DMR during operations. The Process is equipped with pressure relief valves listed in Table D-6 to protect the DMR and CRR if wide pressure fluctuations are experienced. In the event of system upset, any fugitive emissions are directed to and processed by the Building Ventilation System.

Table D-6. IWTU Pressure Relief Valves

Description	Vent to	Drawing
Process Gas Filter pressure relief valve PSV-SRC-153-011	Building HVAC Duct	632763
Off-Gas Cooler and CRR pressure relief valve PSV-SRC-160-012	Building HVAC Duct	632766
Product Receiver Cooler pressure relief valve PSV-SRC-190-011	Vacuum Filter	632787
Canister Fill Port pressure relief valve PSV-SRC-890-010	Vacuum Filter	632787
Product Receiver Cooler pressure relief valve PSV-SRC-191-011	Vacuum Filter	632788
Canister Fill Port pressure relief valve PSV-SRC-891-012	Vacuum Filter	632788
Product Receiver Cooler pressure relief valve PSV-SRC-192-011	Vacuum Filter	632789
Canister Fill Port pressure relief valve PSV-SRC-892-012	Vacuum Filter	632789
Product Receiver Filter pressure relief valve PSV-SRC-191-005	Vacuum Filter	632790
Process HEPA Filters pressure relief valve PSV-SRC-140-006	Building HVAC Duct	632797
Mercury Adsorber pressure relief valve PSV-SRC-141-007A/B	IWTU Stack	632798

The IWTU gas flow and pressure is maintained by the Offgas Blowers that pull gases through the IWTU. The flows are controlled using instrumentation and valves as described above.

D-2e Diagrams of Piping, Instrumentation, and Process Flow [IDAPA 58.01.05.012; 40 CFR 270.16(d)]

The piping systems to be permitted with the PEWE include the piping and tanks depicted in Exhibit D-1. The piping systems to be permitted with the LET&D system include the piping and tanks depicted in Exhibit D-2. The piping system to be permitted with the ETS includes the piping and tanks depicted in Exhibit D-3. The piping system to be permitted with the IWTU includes the piping and tanks depicted in diagrams 632750, 632753, and 632754 in Appendix III.

Ancillary piping and equipment associated with the ILWMS are included in this permit, except the piping and equipment identified below:

- This permit does not include piping and equipment associated with the TFF. The piping and equipment associated with the TFF will be operated under interim status/Consent Order and will be RCRA closed with the tank farm closure.

- This permit does not include piping and equipment associated with CPP-666. The CPP-666 (Fluorinel Dissolution Process) lines are not included because they carry only radioactive waste.

The ancillary piping and equipment upstream of the collection tanks are included in the Diagram Package, Appendix III of this permit.

The INTEC was designed and built using a variety of Architectural Engineers (AE) over the past 50 years. Those AEs used different line identifiers, instrumentation identifiers, etc. As buildings were designed and constructed, the current architectural engineering standards for the time period were used. The diagrams of the processes submitted to the Idaho Department of Environmental Quality (DEQ) span more than 50 years. Therefore, when looking at these diagrams, careful attention must be paid to the identifiers to ensure proper interpretation.

The following is an explanation of the symbols the Idaho National Laboratory (INL) has chosen to identify the RCRA-regulated tank systems associated with the INTEC on the diagrams:

R Indicates an active RCRA-regulated liquid transport line requiring secondary containment and inspections.

E Indicates that the lines in question are not used to routinely manage hazardous waste. They would only receive hazardous waste if an unplanned spill or release occurred. As such, the lines are not subject to secondary containment, daily inspections, or closure. Where drains are located with the secondary containment system for regulated units, they are considered an integral part of a secondary containment system and subject to applicable regulatory requirements associated with secondary containment systems.

O Indicates an active evaporator/fractionator offgas line.

C Indicates an inactive transfer line. The line may have been used for the RCRA waste in the past but is no longer being used.

The design drawings for the IWTU do not contain the line designations presented above. These symbols may be added to the drawings at the time the facility is constructed.

Drawings depicting the standard symbols and nomenclature used on facility diagrams are provided in Appendix III to this permit. These legends do not include all symbols used at the INTEC. The symbols may differ, depending on the timeframe in which the buildings/processes were designed and built. The diagram list for the ILWMS is provided in Table D-7. DEQ selected drawings for the permit are included in Appendix III of this permit.

Table D-7. List of ILWMS Diagrams

Diagram Number	System
057498	Process Flow for CPP-604 Tank Farm Primary Waste Collection and Storage Facilities Flowsheet
057499[a]	CPP-Area Tank Farm CPP Primary Waste Collection and Storage Facilities Flowsheet, Sheet 2 of 6.
094276 Sheets 1 – 4	CPP-604 PEWE Evaporators Process P&ID
096156	CPP-604 PEW Evaporators Collection Tanks
103308	CPP-604 Sampler Flowsheet Waste Storage Tanks
103589	CPP-604 Waste Treatment Building Drain & Service Waste Flowsheet
133400	CPP-659 Utility Flow Diagram Process & Utility Drain Lines Level No. 1, 2, and 3 NWCF
133401	CPP-659 Utility Flow Diagram Process & Utility Drain Lines At Levels No. 1, 2, and 3 NWCF
133402	CPP-659 Utility Flow Diagram Process & Utility Drain Lines Levels No. 1, 2, and 3 NWCF
133406	CPP-659 Outside Yard Piping Flow Diagram
133407	CPP-659 Outside Yard Piping Flow Diagram NWCF
133408	CPP-659 Mechanical P & ID Hot Sump Tanks Cell NWCF
133409	CPP-659 Mechanical Flow Diagram Hot Sump Tanks Cell NWCF
133410	CPP-659 NWCF Mechanical P & ID Blend & Hold Cell & Valve Cubicle Sheet 1 of 4
133411	CPP-659 Mechanical Flow Diagram Blend & Hold Cell & Valve Cubicle NWCF
133412	CPP-659 NWCF Mechanical Flow Diagram Blend & Hold Cell & Valve Cubicle
133413	CPP-659 Mechanical Flow Diagram Blend & Hold Cell & Valve Cubicle NWCF
133417	CPP-659 Mechanical Flow Diagram Calciner Cell & Flow Meter Cubicle Sheet 4 of 8 NWCF
133418	CPP-659 Mechanical Flow Diagram Calciner Cell And Flow Meter Cubicle Sheet 5 of 8 NWCF
133420	CPP-659 Mechanical P & ID Calciner Cell & Flow Meter Cubicle NWCF Sheet 7 of 8 NWCF
133423	CPP-659 Mechanical Flow Diagram Offgas Cell Sheet 2 of 4 NWCF
133424	CPP-659 Mechanical Flow Diagram Offgas Cell Sheet 3 of 4 NWCF
133425	CPP-659 Mechanical Flow Diagram Offgas Cell Sheet 4 of 4 NWCF
133426	CPP-659 Mechanical Flow Diagram Adsorber Cell & Valve Cubicle Sheet 1 of 3 NWCF
133427	CPP-659 Mechanical Flow Diagram Adsorber Cell & Valve Cubicle Sheet 2 of 3 NWCF

Table D-7. List of ILWMS Diagrams (continued)

Diagram Number	System
133428	CPP-659 Mechanical Flow Diagram Adsorber Cell & Valve Cubicle Sheet 3 of 3 NWCF
176274	CPP-659 LET&D Acid Recycle System P&ID
176275	CPP-659 LET&D Acid Recycle System P&ID
179009	CPP-604 Vessel VES-WL-150 P&ID
347791	LET&D Facility Notes & Abbreviations
356596 Sheets 1-11	CPP-1618 Liquid Effluent Treatment and Disposal Facility P&ID
368921	CPP-604 and CPP-649 PWL Collection System Process and Instrument Diagram DVB-OGF-DG-D5 Vault
368922	CPP-604 and CPP-649 PWL Collection System Process and Instrument Diagram DVB-OGF-DG-D8 Vault
368923	CPP-604 and CPP-649 PWL Collection System Process and Instrument Diagram APS Process
368924	CPP 604and CPP-649 PWL Collection System and Instrument Diagram Offgas Blower Cell
368925	CPP-604 and CPP-649 PWL Collection System P&ID Offgas Filter Cell
368926	CPP-604 and CPP-649 PWL Collection System P&ID South Cell
368927	CPP-604 and CPP-649 PWL Collection System Middle Cell P&ID
368929	CPP-604 and CPP-649 PWL Collection System North Cell P&ID
368930	CPP-604 and CPP-649 PWL Collection System Separation/Condensation P&ID
368931	CPP-604, CPP-605, CPP-649, and CPP-708 PWL Collection System Process & Instrument Diagram Main Stack & 161 Evaporator Cell
632359	Arch General Arrangements Product Storage Building Floor Plan
632750	Process Flow Diagram Sodium Bearing Waste Treatment Carbonate HS Case Sheet 1
632752	Process Flow Diagram Additive Feed Carbonate HS Case Sheet 1
632753	Process Flow Diagram SBW Product Transfer and Loadout Carbonate HS Case Sheet 1
632754	Process Flow Diagram Process Exhaust & Building Ventilation Carbonate HS Case Sheet 1
632756	Piping & Instrument Diagram Symbols and Nomenclature Sheet 1
632757	Piping & Instrument Diagram Symbols and Nomenclature Sheet 2
632759	CPP-1696 Piping & Instrument Diagram SBW Waste Transfer

Table D-7. List of ILWMS Diagrams (continued)

Diagram Number	System
632760	CPP-1696 Piping & Instrument Diagram SBW Waste Feed System
632762	CPP-1696 Piping & Instrument Diagram Denitration Mineralization Reformer
632763	CPP-1696 Piping & Instrument Diagram Process Gas Filters
632764	CPP-1696 Piping & Instrument Diagram Carbon Reduction Reformer
632765	CPP-1696 Piping & Instrument Diagram SBW Offgas
632766	Piping & Instrument Diagram Offgas Cooler
632779	Piping & Instrument Diagram Reformer Additives Sheet 1
632780	Piping & Instrument Diagram Reformer Additives Sheet 2
632782	Piping & Instrument Diagram DMR Additive Bin
632783	Piping & Instrument Diagram CRR Additive Bin
632787	CPP-1696 Piping & Instrument Diagram Product Receiver and Canister Filling-Sheet 1
632788	CPP-1696 Piping & Instrument Diagram Product Receiver and Canister Filling-Sheet 2
632790	CPP-1696 Piping & Instrument Diagram Product Cooling
632791	CPP-1696 Piping & Instrument Diagram Canister Vacuum
632792	CPP-1696 Piping & Instrument Diagram Canister Handling
632797	CPP-1696 Piping & Instrument Diagram Process HEPA Filters
632798	CPP-1696 Piping & Instrument Diagram Mercury Adsorbers
632799	CPP-1696 Piping & Instrument Diagram Process Exhaust Monitoring & Discharge
632801	CPP-1696 Piping & Instrument Diagram DMR Fluid Gas System
632821	CPP-1696 Piping & Instrument Diagram Drains and Sumps Sheet 1
632822	CPP-1696 Piping & Instrument Diagram Drains and Sumps Sheet 2
635083	INTEC IWTU Modifications to NWCF Valve Cubicle P&ID
635084	INTEC IWTU Modifications to NWCF Valve Cubicle Installation Plan
637285	INTEC IWTU Infrastructure Piping Tie-Ins Process Line Plan and Profile
637293	INTEC IWTU Modifications to NWCF Valve Cubicle Installation Plan Sheet 2

a. Drawing identifies ancillary equipment upstream of the collection tanks.

D-2f Containment and Detection of Releases

D-2f(1) Plans and Description of the Design, Construction, and Operation of the Secondary Containment System [IDAPA 58.01.05.012 and 008; 40 CFR 270.16(g) and 264.193]

D-2f(1)(a) Tank Age Determination [IDAPA 58.01.05.008; 40 CFR 264.193(a)]

Tables D-1, D-2, D-3, and D-4 list the tank numbers and descriptions, the year operations began, materials of construction, and the design standards used for the tanks in the PEWE, LET&D, ETS, and IWTU.

D-2f(1)(b) Requirements for Secondary Containment and Leak Detection [IDAPA 58.01.05.012 and 008; 40 CFR 270.16(g) and 264.193]

Details regarding construction specifications for the concrete, stainless steel liners, Hypalon® membranes, and paint are located in Attachment 1, Section B, of this permit.

Water stops were installed during construction of buildings, vaults, and cells associated with the PEWE, LET&D, and ETS where required. The IWTU will be constructed following the same considerations to prevent run-on to the regulated units or run-off of hazardous wastes in the event of equipment failures.

Level data for all of the sumps/tanks are recorded at least once every 24 hours. For further discussion on PEWE, LET&D, ETS, and IWTU inspections, see Section F, Procedures to Prevent Hazards.

Since the requirements of IDAPA 58.01.05.008 (40 CFR § 264.196) apply to spills or leaks that constitute a threat to human health or the environment, the following activities will be performed in response to the detection of system discharges in order to determine whether the requirements cited above will be implemented.

- Evaluate the system to determine if an integrity issue exists (this may not involve entering the radiological area). In making this determination, facility personnel will consider whether a discharge has migrated or could potentially migrate and whether it constitutes or could constitute a threat to human health or the environment. Any system discharge that is indicative of an integrity issue will trigger a response under

40 CFR § 264.196. Examples of system discharges that might indicate an integrity issue include pipe breaks, through-wall failures of tank or component boundaries, and system breeches resulting from incorrect maintenance (e.g., pipe or component not reinstalled). A system discharge that is not indicative of an integrity issue will not trigger a response under 40 CFR § 264.196. Examples include discharges caused by opening a pipe system and discharging residual liquids, pump and valve package discharges, mechanical joint and fitting discharges, discharges resulting from transients or maintenance activities that cause pressure surges, discharges from openings in systems where normal operations are at vacuum, and planned decontamination activities.

- Integrity assessments will be conducted in accordance with written and approved procedures
- Results of integrity assessments will be documented in the facility operating record
- For discharges into secondary containment, the liquids will be transferred to compliant storage areas within 24 hours or at the earliest practicable time.

Upon detection of spilled or leaked materials, the following actions are taken:

- Within 24 hours, remove as much of the waste as is necessary to prevent further releases of hazardous waste to the environment and to allow inspection and repair of the treatment system, in accordance with IDAPA 58.01.05.008 [40 CFR § 264]
- Prevent migration of and remove visible contamination from soil or surface water, in accordance with IDAPA 58.01.05.008 [40 CFR § 264]
- If the collected material is an HWMA/RCRA-regulated material, manage it in accordance with all applicable requirements of IDAPA 58.01.05.005 through 58.01.05.008 [40 CFR Parts 261 through 264].

The offgas piping for the ILWMS, while subject to HWMA/RCRA regulations as ancillary equipment to the regulated unit, does not require secondary containment because it is not intended to manage free liquids. However, any liquid condensate from such a gas/vapor stream may be subject to RCRA requirements (December 11, 1989, 54 FR 50968). The ILWMS is designed to remove condensable liquids from offgas. These condensable liquids are collected in tanks equipped with secondary containment and leak detection devices.

The offgas systems at the INTEC are designed, constructed, and managed in a manner that protects human health and the environment. Through a series of control devices (e.g., mist eliminators, condensers, superheaters, piping insulation, and heat traces) the offgas systems are designed to remove condensate from the offgas stream, thereby minimizing the potential for failure of downstream offgas equipment and releases to the environment. While the offgas systems are designed to remove condensate from the offgas streams, the systems are designed to handle liquids, should they form. The offgas lines are constructed of Series 300 stainless steel or Inconel®. Each of these alloys provides excellent corrosion and temperature resistance. Additionally, the offgas piping is sloped to drain to low spots located throughout the offgas system. Each low spot where hazardous waste may accumulate is equipped with a drain line that drains to an HWMA/RCRA-regulated tank system and each drain line is secondarily contained. Prior to discharge to the INTEC Main Stack (CPP-708) or IWTU dedicated stack, each offgas stream is passed through a series of HEPA filters to minimize the potential release of airborne radioactive contamination.

With the exception of the 12-in. offgas line exiting the LET&D, each ILWMS out-of-cell offgas line manages a dry offgas stream. The formation of condensate within these lines would be detected via collection of liquids in downstream condensate collection tanks or high differential pressure across associated HEPA filters. Formation of condensate in these offgas lines or an increase in the pressure differential across associated HEPA filters could constitute an off-specification or upset condition. Such upset conditions are noted in the facility operating record and corrective actions taken, as appropriate.

Moist offgas from the LET&D first passes through a superheater, followed by a HEPA filter, prior to discharging to the heat-traced, insulated, out-of-cell offgas piping to the INTEC Main Stack. The offgas stream is maintained at an elevated temperature to minimize the potential formation of condensate. Off-specification and upset conditions are detected via an increase in the pressure differential across the LET&D HEPA filters and via monitoring of the heat trace. Any upset conditions are recorded in the facility operating record and corrective actions taken, as appropriate.

PEWE System Feed Sediment and Feed Collection Tank Vaults

The PEWE Feed Sediment and Feed Collection Tanks, VES-WL-132 and VES-WL-133, are located in connected underground vaults at the north end of CPP-604. Although these vaults are located at different floor elevations, they share a common sump for leak detection.

The VES-WL-132 vault is constructed of reinforced concrete and is 17 ft long, 16 ft 6 in. wide, and 13 ft 8 in. high. The floor and lower 2 ft 6 in. of the walls are lined with stainless steel.

The VES-WL-133 vault is constructed of reinforced concrete and is 42 ft long, 16 ft 6 in. wide, and 17 ft high. The floor of the cell and the lower 5 ft of the walls are lined with stainless steel.

The floor of the VES-WL-133 vault slopes to a sump along the west wall of the cell, which measures 2 ft by 2 ft by 2 ft. The floor of the VES-WL-132 vault slopes to a 3-in. drain line that leads to the VES-WL-133 vault sump. Liquid accumulation in this sump is monitored and, upon high alarm, liquid is jetted to the inlet line to VES-WL-132.

VES-WL-135, -136, -137, -138, -139, -142, -144, and -150

The PWL tanks are located in sumps in CPP-604, CPP-649, and associated valve boxes. The system is comprised of tanks VES-WL-135, -136, -137, -138, -139, -142, -144, and -150. VES-WL-136, -139, and -142 are located in sumps with measurements of 2 ft by 2 ft by 1 ft 8 in. VES-WL-137, -138, and -144 are located in sumps with measurements of 2 ft 6 in. by 2 ft 6 in. by 2 ft. VES-WL-135 is located in valve box D5, with measurements of 6 ft by 8 ft by 11 ft 9 in. VES-WL-150 is located in the VES-WL-101/102 cell with measurements of 30 ft 6 in. wide, 43 ft long, and 16 ft high. Upon high alarm, the tanks/sumps are jetted as part of the PWL collection system to VES-WL-133 or VES-WL-132.

VES-WL-101 and VES-WL-102 Cell

The vault floor, walls, and ceiling of the VES-WL-101/VES-WL-102 cell are constructed of reinforced concrete that range in thickness from two to four feet. The vault is 30 ft 6 in. wide, 43 ft long, and 16 ft high.

The secondary containment consists of the concrete floor lined with a Hypalon® membrane that extends four feet up the walls.

This cell drains to a stainless-steel-lined floor sump in the center of the cell. Upon high alarm, the sump is jetted to the PWL collection system VES-WL-150 and then to VES-WL-132.

EVAP-WL-161 Cell

The EVAP-WL-161 cell is located on the northeast side of CPP-604. The cell is constructed of reinforced concrete and is 22 ft long, 18 ft wide, and 34 ft high. The cell floor and lower 3 ft of the walls are lined with stainless steel. The Evaporator Head Tank, VES-WL-109, and the Bottoms Collection Tank, VES-WL-111, are also located in this cell. This cell drains to a stainless-steel-lined floor sump

(SU-WL-147) 10 in. in diameter and 1 ft deep, in the northwest corner of the cell. Upon high alarm, the sump is jetted as part of the PWL collection system to VES-WL-133.

There are known defects (cracks) in the CPP-604 EVAP-WL-161 Evaporator cell concrete walls. INTEC structural engineering personnel have evaluated the condition of the WL-161 Evaporator cell and have determined the cell to be structurally sound. RCRA regulations [40 CFR § 264.15(c)] require repair of structures to ensure the problem does not lead to an environmental or human health hazard. The existing condition of the WL-161 cell does not pose a hazard to the environment or to human health. The portion of the cell that provides secondary containment and leak detection is the lower three-foot stainless steel cell liner, which has no defects. The defects in the cell are only in portions of the concrete walls located above the cell liner. Any leaks from the process vessels or ancillary piping will be completely contained within the stainless steel liner and will not subject the concrete wall to any sustained exposure to hazardous waste. The cell is maintained under negative pressure. Any offgas from a leak or spill would be collected in the CPP-604 VOG system. Inspections of the cell during periods of maintenance or repair are made to ensure that deterioration of the concrete does not lead to an environmental or human health hazard.

EVAP-WL-129 Cell and Feed Pump Cell

The EVAP-WL-129 cell and the feed pump cell are located on the east side of CPP-604. Access to both cells is gained through the condensate collection cell. Both cells are constructed of reinforced concrete. The EVAP-WL-129 cell has internal dimensions of 14 ft by 21 ft 4 in. (including the access area) by 34 ft high (the access area is only 8 ft high). The EVAP-WL-129 cell floor and walls are lined with stainless steel. The access area floor and lower 1 ft of the walls are lined with stainless steel. The EVAP-WL-129 cell floor slopes to a 2-in. floor drain that drains to the feed pump cell sump.

The feed pump cell is located just north of the EVAP-WL-129 cell and has internal dimensions of 9 ft 2 in. by 14 ft 6 in. by 8 ft high. The cell floor and lower 1 ft of the walls are lined with stainless steel. The feed pump cell floor also slopes to a 2-in. floor drain that drains to the sump in the northeast corner of the cell. This sump has dimensions of 1 ft 6 in. by 1 ft 6 in. by 2 ft 6 in. Upon high alarm, the sump is jetted to VES-WL-133.

If liquid accumulates in one of the above-mentioned sumps, the accumulated liquid in the sump will initiate an alarm in the Waste Processing Control Room. These sumps are all equipped with steam jets to remove the waste from the secondary containment systems.

Process Condensate Collection Cell

Tanks VES-WL-106, VES-WL-107, and VES-WL-163 are located in the process condensate collection cell. The Condensate Surge Tanks, VES-WL-131 and VES-WL-134, are located in this cell as well. This cell is located on the east side of CPP-604. The cell is constructed of reinforced concrete and has dimensions of 46 ft by 21 ft by 35 ft 6 in. high. The cell floor and lower 1 ft of the walls are lined with stainless steel, which is sealed to the concrete walls to prevent liquid from getting between the liner and the walls. This configuration is common to all stainless steel liners in the ILWMS. A 6-in.-high barrier is located in front of the condensate collection cell door to prevent leakage to the access corridor. This cell drains to either of two sumps, both of which are 10 in. diameter and 1 ft deep. Upon high alarm, the sumps (SU-WL-145 and SU-WL-146) are jetted as part of the PWL collection system to VES-WL-133.

Level data for all of the above-mentioned sumps are recorded at least once every 24 hours. For further discussion on PEWE system inspections, see Section F, Procedures to Prevent Hazards.

If liquid accumulates in one of the above-mentioned sumps, the accumulated liquid in the sump will initiate an alarm in the Waste Processing Control Room. These sumps are all equipped with steam jets to remove the waste from the secondary containment systems.

CPP-604 TFT Vaults

The CPP-604 TFT system tanks are located in two underground connected vaults at the north end of CPP-604.

The west vault, containing VES-WM-100, is constructed of reinforced concrete and is 17 ft wide, 43 ft long, and 16 ft high. The vault adjacent to it on the east contains VES-WM-101 and VES-WM-102, and is 30 ft 6 in. wide, 43 ft long, and 16 ft high. The floors and lower 3 ft 6 in. of the walls in both vaults are lined with stainless steel.

The VES-WM-100 vault slopes to a sump that is 2 ft by 2 ft by 4 ft-deep along the east wall of the vault. The VES-WM-101/VES-WM-102 vault slopes to a sump that is 2 ft by 2 ft by 4 ft deep in the center of the vault. Upon high alarm the sump is jetted to VES-WL-132.

PEWE Secondary Containment System Calculations

The secondary containment structures for the regulated tanks within the PEWE will contain 100 percent of the capacity of the largest tank, and are lined with stainless steel, Hypalon® or equivalent materials.

PEWE System Feed Sediment and Feed Collection Vault

In the event that VES-WL-132 was to fail, its contents would drain to the VES-WL-133 vault. The VES-WL-133 vault will contain 100 percent of the capacity of the largest tank, which is 19,000 gallons, within this secondary containment system. The volume of the VES-WL-133 secondary containment system is 3,465 ft^3 or 25,918 gal.

Equation 1: (42 ft × 16 ft 6 in × 5 ft)

= 3,465 ft^3

= 25,918 gal

VES-WL-101 and VES-WL-102 Cell

The vault will contain 100 percent of the capacity of the largest tank (18,400 gal) within this secondary containment system. This vault also contains VES-WL-150. The volume of the secondary containment system is 3,935 ft^3 or 29,432 gal.

Equation 2: (43 ft × 30 ft 6 in. × 3 ft)

= 3,935 ft^3

= 29,432 gal

Evaporator 161 Cell, EVAP-WL-129, the Feed Pump Cell, Condensate Cell, and the Access Area

40 CFR 264.193(e)(1)(i) and 264.193(e)(2)(i), state that external liner systems and vault systems must be designed or operated to contain 100 percent of the capacity of the largest tank within its boundary.

EVAP-WL-161, EVAP-WL-129, the Feed Pump Cell, the Condensate Cell, and the access area are considered to be contained within one boundary. They are separated by personnel doorways or labyrinths, which only provide personnel protection from radiation exposure and do not act as liquid containment.

In the event that the largest tank within this secondary containment system boundary was to fail, its contents would drain to the Condensate Collection Cell sumps. The floor linings in the Condensate Cell, the pump pit, and the access area slope uniformly towards these sumps. The stainless steel liner in the lower portion of the cell would contain 100 percent of the contents of the largest tank (5,000 gallons) in the cell.

Equation 3:

Total Volume = condensate collection cell volume [*equation 3(a)*] +
evaporator VES-WL-129 cell volume [*equation 3(b)*] +
feed pump cell volume [*equation 3(c)*] +
access area volume [*equation 3(d)*] +
feed pump cell sump volume [*equation 3(e)*] +
VES-WL-161 cell volume [*equation 3(f)]*

Total Volume = 483 ft^3 + 109.6 ft^3 + 66.5 ft^3 + 23.3 ft^3 + 5.6 ft^3 + 198 ft^3

Total Volume = 886 ft^3 or 6,627 gal

Equation 3(a):

Condensate Collection Cell Volume = 46 ft × 21 ft × 6 in.

Condensate Collection Cell Volume = 483 ft^3

Equation 3(b):

Evaporator VES-WL-129 Cell Volume = 15 ft 8 in. × 14 ft × 6 in.

Evaporator VES-WL-129 Cell Volume = 109.6 ft^3

Equation 3(c):

Feed Pump Cell Volume = 14 ft 6 in. × 9 ft 2 in. × 6 in.

Feed Pump Cell Volume = 66.5 ft^3

Equation 3(d):

Access Area Volume = 14 ft × 3 ft 4 in. × 6 in.

Access Area Volume = 23.3 ft^3

Equation 3(e):

Feed Pump Cell Sump Volume = 1 ft 6 in. × 1 ft 6 in. × 2 ft 6 in.

Feed Pump Cell Sump Volume = 5.6 ft^3

Equation 3(f):

161 cell volume = 18 ft × 22 ft × 6 in.

161 cell volume = 198 ft^3

CPP-604 TFT Secondary Containment System Calculations

Both of the stainless-steel liner systems that provide secondary containment for the regulated tanks within the CPP-604 TFT system will contain 100 percent of the capacity of the largest tank (18,400 gal.) within the secondary containment systems.

VES-WM-100 Vault

The VES-WM-100 vault will contain 100 percent of the capacity of the largest tank (18,400 gal) within this secondary containment system. The volume of the VES-WM-100 secondary containment system is 2,558 ft^3 or 19,135 gal.

Equation 4: (17 ft × 43 ft × 3 ft 6 in.)

= 2,558 ft^3

= 19,135 gal

VES-WM-101/VES-WM-102 Vault

The VES-WM-101/VES-WM-102 vault will contain 100 percent of the capacity of the largest tank (18,400 gal) within this secondary containment system. The volume of the VES-WM-101/VES-WM-102 secondary containment system is 4,590 ft^3 or 34,335 gal.

Equation 5: (30 ft 6 in. × 43 ft × 3 ft 6 in.)

= 4,590 ft^3

= 34,335 gal

PWL Tanks Containment System Calculations

VES-WL-135, Vessel in Sump SU-WL-135

This tank collects offgas condensate. The tank is located in the D5 Valve Box. The tank has an approximate capacity of 10 gallons. The approximate capacity of the secondary containment including the sump is 1,346 gallons.

Equation 8: $6.0\text{ft} \times 8.0\text{ft} \times 3\text{ft } 9\text{in} = 180\text{ft}^3$

$180\ \text{ft}^3 = 1{,}346$ gallons

VES-WL-136, Vessel in Sump SU-WL-136

This tank collects offgas condensate. The tank is located in the D8 Valve Box. This tank has an approximate capacity of 10 gallons. The approximate capacity of the sump is 50 gallons.

Equation 9: $2\text{ft} \times 2\text{ft} \times 1\text{ft } 8\text{in} = 6.67\text{ft}^3$

$6.67\text{ft}^3 = 50$ gallons.

VES-WL-137, Vessel in Sump SU-WL-137

This tank collects offgas condensate. The tank has an approximate capacity of 25 gal. The approximate capacity of the sump is 93 gallons.

Equation 10: $2\text{ft } 6\text{in} \times 2\text{ft } 6\text{in} \times 2\text{ft} = 12.5\text{ft}^3$

$12.5\text{ft}^3 = 93$ gallons.

VES-WL-138, Vessel in Sump SU-WL-138

This tank collects condensate from the vessel offgas system. The tank has an approximate capacity of 25 gal. The approximate capacity of the sump is 93 gallons.

Equation 11: $2\text{ft } 6\text{in} \times 2\text{ft } 6\text{in} \times 2\text{ft} = 12.5\text{ft}^3$

$12.5\text{ft}^3 = 93$ gallons.

VES-WL-139, Vessel in Sump SU-WL-139

This tank collects offgas condensate. The tank has an approximate capacity of 10 gal. The approximate capacity of the sump is 50 gallons.

Equation 12: $2ft \times 2ft \times 1ft\ 8in = 6.67ft^3$

$6.67ft^3 = 50$ gallons.

VES-WL-142, Vessel in Sump SU-WL-142

This tank collects offgas condensate. The tank has an approximate capacity of 10 gal. The approximate capacity of the sump is 50 gallons.

Equation 13: $2ft \times 2ft \times 1ft\ 8in = 6.67ft^3$

$6.67ft^3 = 50$ gallons.

VES-WL-144, Vessel in sump SU-WL-144

This tank currently collects liquids released to the pump pit enclosure sump. The tank has an approximate capacity of 25 gal. The approximate capacity of the sump is 93 gallons.

Equation 14: $2ft\ 6in \times 2ft\ 6in \times 2ft = 12.5ft^3$

$12.5ft^3 = 93$ gallons.

LET&D Cells and Vaults

LET&D Fractionator Cell 1

For discussion on LET&D system inspections, see Section F, Procedures to Prevent Hazards.

Acid Fractionator Cell 1 is 17 ft long and 14 ft 6 in. wide. The cell is constructed of steel-reinforced concrete with a stainless-steel liner that is 3 ft high. The cell has a door in the east wall. In front of the door is a step measuring 3 ft 10 in. by 3 ft 10 in. by 4 in. The floor is sloped toward a sump, which is located slightly to the northeast of the center of the cell. The cell walls are steel-reinforced, concrete. The stainless steel is compatible with the waste and decontamination solutions received at the LET&D.

The floor sump is provided with liquid level detection. The liquid level detection transmits an alarm to the DCS, which alerts the operator to the presence of any liquid that has spilled and drained to the sump, which is the low point in the cell. The sump is provided with a steam jet to remove accumulated material from the sump. These wastes are jetted to the Bottoms Tank, VES-WLL-195, PEWE tanks, VES-WL-101 and VES-WL-133, or the Acid Recycle Tank, VES-NCR-171.

LET&D Fractionator Cell 2

Acid Fractionator Cell 2 is 17 ft long and 14 ft 6 in. wide. The cell is constructed of steel-reinforced concrete with a stainless-steel liner that is 3 ft high. The cell has a door in the west wall. The floor is sloped toward a sump, which is located in the cell.

The floor is sloped to drain toward the sump. In the northwest corner of Fractionator Cell 2 is the vault containing the Bottoms Tank, VES-WLL-195. Although the floor of the fractionator cell does not slope directly to the bottoms tank vault, the vault would serve as the containment mechanism if a leak caused the sump to become full. The vault containing the Bottoms Tank is completely lined with stainless steel. The floor of the bottoms tank vault slopes toward the west, where the vault sump is located.

A floor sump is provided in the acid fractionator cell. Level transmitters actuate alarms on the DCS and alert the operator to the presence of any liquid that has spilled and drained to the sump, which is the low point in the cell. In addition, the bottoms tank vault sump is equipped with level instrumentation monitored by the DCS.

The sumps in the cell are provided with steam jets to remove any spilled material from the sumps promptly. The liquid wastes that accumulate in either of the sumps are removed via a steam jet to the Bottoms Tank, VES-WLL-195, PEWE tanks, VES-WL-101 and VES-WL-133, or the Acid Recycle Tank, VES-WL-171.

Acid Recycle Tank Vault

The Acid Recycle Tank, VES-NCR-171, and Head Tank, VES-NCR-173, are located in the CPP-659 Annex. The Annex is approximately 17 ft wide and 42 ft long, with a stainless-steel liner that is 4 ft 8 in. high. In the southeast corner of the vault is a large sump, which conservatively is not included in the capacity calculation.

The floor is sloped to drain to the gutter on the south side of the vault. The gutter drains to the southeast into the sump unit.

A floor sump is provided at the southeast corner of the vault. The liquid level detector is a pneumatic system that measures leaks using differential pressure. The detector transmits a signal to the NWCF DCS system. Any leaks will initiate an alarm on the DCS and alert the operator to the presence of any liquid that has spilled and drained to the sump, which is the low point in the vault. The sump in the vault is provided with a steam jet to remove any spilled material from the sump promptly. The liquid wastes that accumulate in the sump are jetted to appropriate tanks.

LET&D and Acid Recycle Tank Vault Secondary Containment System Calculations

Most of the ancillary equipment and piping for the tank systems in the LET&D system are contained in the same cells as the waste tanks. Those process piping systems that are not located within cells with secondary containment are underlain with drip troughs comprised of stainless steel, which has been shown to be compatible with the types of wastes exiting the cells. The lines in the pipe bridge are equipped with leak detection that alarms on the DCS. Drip troughs and collection bottles are discussed in greater detail later in this section.

The acid recycle line from the Bottoms Tank to the Acid Recycle Tank has full secondary containment. The waste and secondary containment pipe are both stainless steel. Any leaks in the acid recycle line will gravity drain toward the acid recycle vault sump.

Acid Fractionator Cell 1

Cells 1 and 2 have the same dimensions. Acid Fractionator Cell 1 has a 17-ft by 14 ft 6 in.-floor area. The cell is constructed of steel-reinforced concrete with a stainless-steel liner that is 3 ft high. The cell has a door in the east wall. In front of the door is a step measuring 3 ft 10 in. by 3 ft 10 in. by 4 in. The floor is sloped toward a sump, which is located slightly to the northeast of the center of the cell.

The Acid Fractionator (FRAC-WLK-171) and associated equipment in Cell 1 have a maximum capacity of 460 gal. The capacity of the secondary containment system is 577 gal. The cell will contain 100 percent of the capacity of the Acid Fractionator. This cell also contains VES-WLK-197. The maximum capacity of the tank is 270 gal.

The secondary containment system capacity exceeds the capacity of the Acid Fractionator (460 gal).

Equation 16: (cell – step off pad)

(17 ft × 14 ft 6 in. × 4 in.) – (3 ft 10 in. × 3 ft 10 in. × 4 in.)

= 82.17 ft^3 – 4.9 ft^3 = 77.19 ft^3

= 577 gal

Acid Fractionator Cell 2

Acid Fractionator Cell 2 has a floor area of 17 ft by 14 ft 6 in. The cell is constructed of steel-reinforced concrete with a stainless-steel liner that is 3 ft high. The cell has a door in the east wall. The floor is sloped toward a sump, which is in the cell.

The Acid Fractionator (FRAC-WLL-170) and associated equipment in Cell 2 have a maximum capacity of 460 gal. The capacity of the secondary containment system is 2,103 gal. The cell will contain 100 percent of the capacity of the Acid Fractionator. This cell also contains VES-WLL-195, which is located in a pit. VES-WLL-195 has a maximum capacity of 270 gal. The pit volume minus VES-WLL-195 volume will contain 100 percent of the capacity of the Acid Fractionator.

Equation 17: (PIT – VES-WLL-195)

(7 ft 10 in. × 6 ft 9 in. × 6 ft) – 36.1 ft^3

= 317.2 ft^3 – 36.1 ft^3 = 281.1 ft^3

= 2,103 gal

Acid Recycle Tank Vault

The Acid Recycle Tank, VES-NCR-171, and Head Tank, VES-NCR-173, vault is 17 ft 4 in. wide and 41 ft 3 in. long and has a stainless-steel liner that is 4 ft 8 in. high. In the southeast corner of the vault is a large sump, which conservatively is not included in the capacity calculation. The overall capacity of the vault is 24,955 gallons.

The capacity of the secondary containment in the acid recycle vault will contain 100 percent of the capacity of the largest tank (22,500 gal).

Equation 18: (17 ft × 41 ft 7 in. × 4 ft 8 in.)

= 3,299 ft^3

= 24,676 gal

ETS Cells

Blend and Hold Cell

The blend and hold cell contains the feed blend tank (VES-NCC-101), the feed hold tanks (VES-NCC-102, VES-NCC-103), the evaporator flash column (VES-NCC-150), and the constant head feed tank (VES-NCC-152). It has a 32 ft 4 in. by 24 ft, floor area and a 3-ft high stainless-steel liner. The capacity of the stainless-steel lined secondary containment is approximately 17,400 gal. The capacity of the largest tank (VES-NCC-101) is approximately 6,000 gallons.

The cell is equipped with a stainless-steel liner system, which slopes to a floor drain and serves as secondary containment to the tanks. The drains are equipped with instrumentation (e.g., bubbler probe) to detect leaks. An alarm sounds when liquid is detected. Floor drains are connected to VES-NCC-119 or VES-NCC-122 with stainless-steel piping. The stainless steel is compatible with the waste and decontamination solutions received at ETS.

Offgas Cell

The offgas cell houses the Scrub Hold Tank (VES-NCC-108) and the scrub solution-recycle pumps. The Scrub Hold Tank (VES-NCC-108) is the largest tank in the cell. The capacity of VES-NCC-108 is approximately 2,000 gallons.

The offgas cell has a 33 ft 4 in. by 16 ft 3 in. floor area and a 3-ft-high stainless-steel liner. A sloped, 1-ft-deep gutter runs along the length of the east wall. The capacity of the stainless-steel lined secondary containment is approximately 12,200 gal.

The floor drain line is equipped with a liquid level indicator and an alarm provides primary indication of a breach of primary containment. Containment of solution is provided by the floor drain, which directs solution to VES-NCC-119. The stainless steel is compatible with the waste and decontamination solutions received at ETS.

Adsorber Cell

The Adsorber cell houses VES-NCC-116 and VES-NCC-136 and associated heat exchangers. The adsorber cell has a 26 ft 6 in. by 31 ft 6 in. floor area and a 3-ft-high stainless-steel liner. The capacity of VES-NCC-116 is approximately 500 gallons, which is the largest operational tank in the cell.

The floor and walls are lined with stainless steel. The floor has a sump with leak detection. Upon alarm, the collected liquid is drained to VES-NCC-119. The capacity of the stainless-steel lined

secondary containment is approximately 18,700 gal. The stainless steel is compatible with the waste and decontamination solutions received at ETS.

Hot Sump Tank Cell

The hot sump tank cell (102), located on the forth level, houses the two hot sump tanks (VES-NCC-119 and VES-NCC-122) and a recirculation pump. The hot sump tank cell is 24 ft 2 in. by 24 ft 6 in. with a 17 ft 6 in.-high stainless steel liner. The valve access room is 19 ft 6 in. by 11 ft 10 in. with a 3-ft-high stainless-steel liner.

The floor has a sump, which can be jetted to the fluoride hot sump tank. The cell floor is sloped to drain to a gutter on the west side of the cell, and the gutter drains to the south and into the sump. The capacity of the secondary containment system encompassing the sump tanks cell, entry corridor, and the valve access room is approximately 19,800 gallons. The largest tank in the cell is the Fluoride Hot Sump Tank (VES-NCC-119), which holds approximately 6,500 gal.

ETS Secondary Containment System Calculations

Blend and Hold Cell

The Blend and Hold Cell has a 32 ft 4 in. by 24 ft floor area. The cell is constructed of steel-reinforced concrete with a stainless-steel liner on the floor and 3 ft up the walls. The floor is sloped toward a sump.

The capacity of the secondary containment exceeds the capacity of the largest tank (VES-NCC-101) in the cell, which holds approximately 5,870 gal.

Equation 19: (32.3 ft x 24 ft x 3 ft)

$= 2{,}326\ ft^3$

= 17,400 gallons

Offgas Cell

The offgas cell has a 33 ft 4 in. by 16 ft 3 in. floor area and a 3-ft-high liner (from the high point of the floor). The low point of the floor is 4 in. below the high point. A sloped, 1-ft-deep gutter runs along the length of the east wall. The capacity of the stainless-steel liner system that provides secondary containment is 1625 ft^3 or approximately 12,156 gal.

The largest tank in the cell VES-NCC-108 scrub hold tank holds approximately 2,000 gallons. The secondary containment system capacity exceeds the capacity of the scrub hold tank.

Equation 20: (16.25 ft × 33.33 ft × 3 ft)

= 1,625 ft^3

= 12,156 gal.

Adsorber Cell

The Adsorber cell houses VES-NCC-116 and VES-NCC-136 and associated heat exchangers. The adsorber cell has a 26 ft 6 in. by 31 ft 6 in. floor area and a 3-ft-high stainless-steel liner. The capacity of VES-NCC-116 is approximately 500 gallons, which is the largest operational tank in the cell.

The largest tank in the cell VES-NCC-116 mist collector holds approximately 500 gal. The secondary containment system capacity exceeds the capacity of the mist collector.

Equation 21: (26.5 ft × 31.5 ft × 3 ft)

= 2504 ft^3

= 18,731 gal.

Hot Sump Tank Cell

The hot sump tanks cell and the valve access room are connected. The hot sump tank cell is 24 ft 2 in. by 24 ft 6 in. with a 17 ft 6 in.-high stainless steel liner. The valve access room is 19 ft 6 in. by 11 ft 10 in. with a 3-ft-high stainless-steel liner. A sloped entry corridor from the valve access room to the hot sump tanks cell is about 4 ft by 11 ft 10 in. with a 3-ft-high stainless-steel liner. The capacity of the secondary containment system encompassing the sump tanks cell, entry corridor, and the valve access room is approximately 19,800 gallons.

The largest tank in the cell, VES-NCC-119 fluoride hot sump tank, holds approximately 6,500 gal. The capacity of the secondary containment system exceeds the capacity of the fluoride hot sump tank.

Equation 22: volume valve access room and doorway

(19.5 ft × 11.83 ft × 3) = 692 ft^3

Equation 23: volume entry corridor

(4 ft × 14.83 ft × 3 ft) = 178 ft^3

Equation 24: volume hot sump tanks cell

$(24.5 \text{ ft} \times 24.17 \text{ ft} \times 3 \text{ ft}) = 1{,}777 \text{ ft}^3$

Equation 25: total volume

$(692 \text{ ft}^3 + 178 \text{ ft}^3 + 1777 \text{ ft}^3) = 2{,}647 \text{ ft}^3$

$= 19{,}800$ gal

IWTU Process Cell

The IWTU Process Cell contains the Waste Feed Tank, DMR, Process Gas Filter, and the Offgas Filter. The total floor space is approximately 37 ft 2 in. by 34 ft 5 in. The sump measures approximately 1 ft 6 in. by 1 ft 6 in. by 1 ft 6 in. The floor and lower 2 ft of the walls are lined with stainless steel. The capacity of the Waste Feed Tank, VES-SRC-131, is approximately 2,170 gallons, which is the largest liquid containing tank in the cell.

The floor drains to a sump that has leak detection. Upon alarm, the collected liquid is jetted to the NWCF, Tank Farm, or VES-SRC-131. The sump is not jetted to VES-SRC-131 if this tank is the source of the liquid. The capacity of the stainless-steel lined secondary containment is approximately 19,170 gal. The stainless steel is compatible with the waste treated and decontamination solutions used at the IWTU.

IWTU Secondary Containment System Calculations

Process Cell

The Process Cell floor and sump will contain 100 percent of the capacity of the largest tank, which is approximately 2,170 gallons, within this secondary containment system. The volume of the Process Cell secondary containment system is approximately 19,000 gal.

Equation 26 floor: $(37 \text{ ft } 2 \text{ in.} \times 34 \text{ ft } 5 \text{ in.} \times 2 \text{ ft})$

$= 2{,}558 \text{ ft}^3$

$= 19{,}137$ gal

Equation 27 sump: (1 ft 6 in. x 1 ft 6 in. x 1 ft 6 in.)

$= 3 \text{ ft}^3$

$= 25$ gal

Offgas Condensate Collection Tank

The Offgas Condensate Collection Tank is a polypropylene horizontal, rectangular, double walled tank, measuring approximately 4 ft x 2 ft x 2 ft in dimension. A breach of the primary containment would be detected and collected in the tank annulus. The collected liquids will be removed and the source of the leak identified. The tank will either be repaired, replaced, or other provisions made prior to restarting affected IWTU process equipment.

Fire Water Collection Tank

The Fire Water Collection Tank is a double walled tank. A breach of the primary containment would be detected and collected in the tank annulus. The collected liquids will be removed and the source of the leak identified. The tank will either be repaired, replaced, or other provisions made for fire water collection prior to restarting affected IWTU process equipment.

Transfer Line Secondary Containment

Sections of ILWMS transfer lines not located within buildings are secondarily contained inside piping that is compatible with the types of waste being managed. The secondary containment piping slopes to either a cell within a building or a valve box equipped with a stainless steel liner and leak detection instrumentation (e.g., radiation monitors, level indicating instrumentation). These cells and valve boxes contain sumps equipped with steam jets to remove the waste from the secondary containment systems.

The transfer line from the NWCF to the IWTU Waste Feed Tank is secondarily contained in a stainless steel pipe. The transfer line is sloped back to the NWCF. The secondary containment pipe is sloped back to the NWCF valve cubicle where any liquid would be collected, detected, and removed.

The transfer line from CPP-1696 to the Fire Water Collection Tank is equipped with secondary containment and sloped to the Fire Water Collection Tank. Any leak from the transfer line to the secondary containment piping is routed to the tank annulus, which is equipped with leak detection.

The transfer line from CPP-1696 stack to the Offgas Condensate Collection Tank is equipped with secondary containment and sloped to the Offgas Condensate Collection Tank. Any leak from the transfer line to the secondary containment piping is routed to the tank secondary containment, which is equipped with leak detection.

ILWMS transfer lines located within buildings are contained in cells that are lined with barriers compatible with the types of waste being managed. Cell floors slope toward sumps equipped with leak detection instrumentation. These sumps are also equipped with steam jets to remove the waste from the secondary containment systems.

Drip troughs are located beneath process transfer lines within CPP-604, CPP-605, and CPP-1618. A drip trough also extends below the pipe bridge that spans from CPP-605 to the LET&D facility. The troughs are designed to collect liquid (e.g., recovered nitric acid) in the event of a leak from the process transfer lines. These drip troughs are sloped and drain to collection bottles located within each system.

The drip troughs located within the LET&D facility are not equipped with leak detection devices. Therefore, LET&D collection bottles are inspected daily for the presence of liquid when the fractionators are operating. These inspections are noted on Form INTEC-4055, which is included in Appendix F-1. Documentation of all inspections is maintained in the facility operating record.

All drip troughs located in CPP-604, CPP-605, and the pipe bridge are equipped with leak detection cables that are continuously monitored by the DCS.

Upon alarm, or when liquids are discovered in the LET&D collection bottles, samples are taken to determine whether the source of the liquid is a hazardous waste (e.g., pH, acidity). If the liquid is hazardous, it is characterized as described in Section C of this permit and managed appropriately.

Run-on or Infiltration of Precipitation

This is addressed in Attachment 6, Section F-4b of this permit.

D-2g Controls and Practices to Prevent Spills and Overflows [IDAPA 58.01.05.012 and 008; 40 CFR 270.16(i) and 264.194(b)]

Overfilling of the Feed Collection Tank, evaporators, Condensate Surge Tanks, Bottoms Collection Tank, Process Condensate Collection Tanks, the Acid Fractionator Waste Feed Head Tank, the IWTU Waste Feed Tank, and Fire Water Collection Tank is prevented by instrumentation in the Control Room that monitors liquid levels and by operators controlling liquid flow accordingly.

In addition to these operating controls, liquid level instrumentation for the Feed Collection Tank, evaporators, Condensate Surge Tanks, Bottoms Collection Tank, and Waste Feed Tank will alarm upon high level (or high-high level, if equipped). In the case of a high (or high-high) liquid level alarm, the condition will be investigated and appropriate action taken.

Facility personnel monitor the processes for the tank systems addressed in this permit. System instrumentation and alarms are monitored to ensure that no errors have been made or process changes have occurred. Administrative controls are implemented to ensure that the processes are performed safely.

To prevent hazardous waste spills and overflows, facility personnel visually inspect or monitor instrumentation for tanks, piping, valves, and secondary containment devices on a daily basis when these tank systems are in use. For more information regarding inspections and monitoring, refer to Attachment 4, Section F of this permit.

CPP-604 TFT System

The overflow lines that are connected between VES-WM-100 to VES-WM-101 have been administratively removed from service. The alarm set point has been established that prevents overflow between the tanks. Monitoring level instrumentation located in the CPP-604 alerts the operators to prevent overfilling of VES-WM-102. In addition to these operating controls, liquid level instrumentation for VES-WM-102 will alarm in the Waste Processing Control Room upon high level. In the case of a high liquid level alarm, the condition will be investigated and appropriate action taken.

The PWL Tanks, VES-WL-150, and the Acid Recycle Storage Tank

Overfilling of the collection tanks is prevented by monitoring the level instrumentation in the waste processing DCS via a combination of tank level instrumentation and monitoring of the secondary containment system. Any leaks or spills from the unit would be detected in the sumps and removed upon high-level alarm. In the case of a high liquid level alarm, the condition will be investigated and appropriate action taken.

CPP-1618 LET&D

Spills and overflows in the LET&D facility are controlled and prevented by administrative and DCS process control systems. The Acid Fractionator Waste Feed Head Tank, VES-WLK-197, has a high level alarm on the DCS to alert the operators of a potential overfill condition and a high-high alarm that automatically shuts down the feed inlet valve and pump. The feed tank is equipped with a line that drains into the Bottoms Tank. The fractionators and associated separators have high level alarms on the DCS, which will alert the operators and a high-high level alarm that automatically shuts the system down. The Bottoms Tank has a high level alarm on the DCS to alert the operators of a potential overfill condition and the need to transfer the waste. Fractionators have low and low-low alarms, which would alert the

operators to a possible leak. In the case of a high liquid level alarm, the condition will be investigated and appropriate action taken.

CPP-659 Annex LET&D Nitric Acid Recycle Tank

Spills and overflows in the CPP-659 Annex LET&D Nitric Acid Recycle Tank are controlled and prevented by administrative and DCS process control systems. Prior to a transfer to VES-NCR-171, the level indicator is checked to verify adequate capacity to accept a transfer. As an added measure of protection, a high level alarm for VES-NCR-171 notifies facility personnel when a predetermined set point is reached. Upon high alarm, all transfers to VES-NCR-171 are discontinued and no further transfers to the tank are made. The condition will be investigated and appropriate action will be taken.

CPP-659 Annex VES-NCR-173, Acid Head Tank

CPP-659 Annex VES-NCR-173, Acid Head Tank, has an overflow line that drains back to VES-NCR-171. VES-NCR-173 has no instrumentation installed in the vessel.

CPP-659 ETS

Overfilling of the ETS tanks is prevented by observing instrumentation in the NWCF Control Room that monitors liquid levels and by operators controlling liquid flow accordingly. In addition to these operating controls, liquid level instrumentation for the ETS tanks will alarm in the control room upon high level or high-high level. In the case of a high or high-high liquid level alarm, the condition will be investigated and appropriate action taken.

To prevent hazardous waste spills and overflows, facility personnel visually inspect or monitor instrumentation for tanks, piping, valves, and secondary containment devices on a daily basis when the evaporator is in use. For more information regarding inspections and monitoring, refer to Section F of this permit.

CPP-1696 IWTU

Overfilling of the IWTU Waste Feed Tank, Offgas Condensate Collection Tank, and Fire Water Collection Tank is prevented by observing instrumentation in the CPP-1696 Control Room that monitors levels and by operators controlling flows accordingly. In addition to these operating controls, level instrumentation for the IWTU tanks will alarm in the control room upon low, low-low, high, or high-high

level. In the case of a low, low-low, high, or high-high level alarm, the condition will be investigated and appropriate action taken.

To prevent hazardous waste spills and overflows, facility personnel visually inspect or monitor instrumentation for tanks, piping, valves, and secondary containment devices on a daily basis when the IWTU is in use. For more information regarding inspections and monitoring, refer to Section F of this permit.

D-8. MISCELLANEOUS UNITS [IDAPA 58.01.05.012 AND 58.01.05.008; 40 CFR 270.23 AND 264.601]

D-8a. Description of Miscellaneous Units [IDAPA 58.01.05.012; 40 CFR 270.23(a)(1) and (2)]

The ILWMS buildings are described in the Facility Description in Attachment 1, Section B and the processes are described in the Attachment 1, Process Information section of Section D of this permit.

The miscellaneous units are:

- PEW evaporator EVAP-WL-129, which includes flash column (VES-WL-129), a mist eliminator (VES-WL-130), a reboiler (HE-WL-307), and a condenser (HE-WL-308);
- PEW evaporator EVAP-WL-161, which includes flash column (VES-WL-161), a separator (VES-WL-162), a reboiler (HE-WL-300), and a condenser (HE-WL-301);
- FRAC-WLL-170, which includes the fractionator, a condenser (HE-WLL-396), a reboiler (HE-WLL-398), and a separator (VES-WLL-198);
- FRAC-WLK-171, which includes the fractionator, a condenser (HE-WLK-397), a reboiler (HE-WLK-399), and a separator (VES-WLK-199);
- EVAP-NCC-150, which includes flash column (VES-NCC-150), reboiler (HE-NCC-350), and a condenser (HE-NCC-351);
- Integrated Waste Treatment Unit, which can be divided into the following two subsystems; 1) SBW Treatment System, which manages the liquid and offgas phases of the process; and 2) Product Transfer and Loadout System, which deals with solids management. The components of each of these subsystems are identified below:

- SBW Treatment System, includes VES-SRC-140 [Denitration and Mineralization Reformer (DMR)], F-SRC-153 (Process Gas Filter), VES-SRC-160 [Carbon Reduction Reformer (CRR)], COL-SRC-160 (Offgas Cooler), F-SRC-160 (Offgas Filter), BLO-SRH-260 A and B (Offgas Blowers), F-SRH-140 A, B, C, and D (Process HEPA Filters), F-SRH-141 A and B (Mercury Adsorbers), and Process Exhaust Blowers BLO-SRH-240 A and B

- Product Transfer and Loadout System, which includes AUG-SRC-440 (DMR Auger/Grinder), F-SRC-191 (Product Receiver Filter), VES-SRC-180 (Product Receiver Filter Product Pump), F-SRC-190 (Product Handling Vacuum Filter), and the Canister Filling Stations (3).

See "Pilot Plant Report for Testing Sodium-Bearing Waste Surrogates Carbonate Flowsheet," Document No. RT-ESTD-PMR-001, Revision 0, October 2006, in Appendix XII to this permit for background information on the IWTU including: metallurgy data utilized to select materials of construction; design basis information for certain process components; laboratory data demonstrating the effectiveness of the treatment process; and supporting information used to determine operating procedures, process limits, monitoring strategies, and maintenance techniques.

D-8b Environmental Performance Standards for Miscellaneous Units [IDAPA 58.01.05.008 and 58.01.05.012; 40 CFR 264.601 and 270.23(c)]

No viable pathway exists for migration of hazardous waste or hazardous constituents from the waste treated in the PEWE, LET&D, ETS, or IWTU to the soil, ground water, and/or surface water.

A potential pathway for release of waste constituents is through exhaust air either from the PEWE, LET&D, ETS, or IWTU. Any release would be limited to the period during which the PEWE, LET&D, ETS, or IWTU are operating.

The potential for a release through the exhaust air system of hazardous constituents that could potentially have adverse effects on human health or the environment is minimized by the PEWE, LET&D, ETS, or IWTU offgas systems.

The PEWE system condenses and collects the process offgas (POG) and transfers it to the LET&D system for further treatment as discussed previously. The only releases from the PEWE system are non-condensables such as instrument air. The PEWE offgas is routed to the VOG system, the APS,

and then is released to the atmosphere via the Main Stack. The LET&D POG is HEPA filtered before it is released to the Main Stack. Although they are not specifically designed to trap organic constituents, HEPA filters trap any particulates that may contain hazardous constituents. The process will contain the waste constituents in the liquid and, thus, only minute amounts of waste constituents can potentially escape the process. The ETS condenses and collects the POG and transfers it to the PEWE system for further treatment as discussed previously. The only releases from the ETS are non-condensables such as instrument air. The ETS offgas is routed to the APS and then is released to the atmosphere via the main stack. The IWTU utilizes steam reformers to convert organics and nitrogen oxides into carbon dioxide, elemental nitrogen, and water vapor. The IWTU offgas is filtered then treated in mercury adsorbers prior to release from its dedicated stack. The PEWE, LET&D, ETS, and IWTU exhaust air systems are discussed below.

Vessel Offgas (VOG) System and Process Atmospheric Protection System

The PEWE system tanks vent to the INTEC VOG system. The system provides vacuum and HEPA filtration for the offgas from the tanks in the connected facilities. The ETS utilizes the existing NWCF VOG and POG systems for the ETS offgas. The VOG and POG systems flow to the process APS, which is located in CPP-649. The process APS system provides additional HEPA filtration to the VOG and POG systems. From the APS, the offgas is exhausted to the INTEC Main Stack.

When the LET&D system is operating, the tanks vent to the INTEC Main Stack through the LET&D process offgas HEPA filters. When the LET&D is not operating, the tanks vent to the Ventilation Atmospheric Protection System.

The ETS offgas is connected to the NWCF VOG. The vent from VES-NCC-351 connects to the VES-NCC-101 overfill line into the vapor space of VES-NCC-101. The ETS offgas combined with VES-NCC-101 offgas are condensed by HE-NCC-336. Any remaining liquids in the offgas enter the NWCF POG and are removed in mist eliminators, VES-NCC-136 and VES-NCC-116. The offgas then passes through HEPA filters prior to being discharged to the APS and main stack.

The IWTU Waste Feed Tank is vented to the Process Cell. The process gas is steam reformed, filtered, treated in a mercury adsorber, monitored, and then exhausted through a dedicated stack.

Ventilation Atmospheric Protection System Sources

The ventilation air system for the PEWE, LET&D, and ETS is composed of ventilation air from CPP-604, -640, -649, and -1618. This air is used to heat, to ventilate, and to provide contamination

control for the above facilities. The ventilation air, which is the bulk of the flow to the Main Stack, flows from the occupied office/laboratory areas, through the operating corridors, through the cells, and finally, passes through the Ventilation Atmospheric Protection System.

The ventilation offgas cleanup system consists of a fiberglass bed prefilter (CPP-756) and HEPA filters arranged in 26 parallel banks of four parallel filters. The ventilation air is exhausted to the Main Stack through blowers.

Building CPP-1696 is equipped with its own dedicated building ventilation system. Ventilation is directed from areas of lower potential contamination, such as the intermediate zoned area for maintenance and truck bay and eventually to areas of higher potential contamination, such as the Process Cell. Building ventilation inlet air is filtered, as is the ventilation air entering the Process Cell and other shielded cells. The air from the shielded cells is then routed through the Building Ventilation HEPA Filters and ultimately combined with process offgas in the Air Mixing Box downstream of the Continuous Emissions Monitoring System and exhausted through the IWTU stack.

Performance Testing

Following fabrication of the IWTU, the full-scale process components will be transported to INTEC and assembled in CPP-1696. Once assembled, the system will undergo necessary tightness testing to verify proper construction. Component testing will then be conducted to ensure proper operation of subsystems. System testing will then be performed using water to ensure the system functions properly and meets the specifications dictated by the design. Once it is determined that the process components meet the desired specifications and system operability has been demonstrated, performance testing will be conducted using non-radioactive SBW surrogate or actual SBW to gauge system performance, demonstrate effective treatment, and verify/revise final operating parameters. A test plan for IWTU performance testing will be submitted to the DEQ at least one year prior to the initiation of the test.

Details concerning the start-up protocols that will be used to take the IWTU process from system testing to full operations are found in Appendix D-5, "IWTU Commissioning, Transition, and Readiness Plan, PLN-2020, Rev. 10, Effective Date: 03/03/11 and System Plan for the Treatment of INTEC Sodium-Bearing Waste Using the Steam Reforming Process, PLN-2019, Rev. 5, Effective Date: 05/11/11. These plans will continue to be updated as the system nears full operation. Updates of these plans will be included in the permit with future permit modification requests, as necessary. During the start-up phase, all RCRA inspections will be performed twice as frequently as the permit requires during

normal operations. The control parameters to be utilized during the start-up are the same as those proposed for normal operations.

D-8b(1) Miscellaneous Unit Wastes [IDAPA 58.01.05.008; 40 CFR 264.601(a)(1), 264.601(b)(1), and 264.601(c)(1)]

The chemical characteristics of the wastes are described in Attachment 2, Section C of this permit.

D-8b(2) Containment System [IDAPA 58.01.05.008 and 58.01.05.012; 40 CFR 264.601(b)(2) and 270.23(a)(2)]

The containment systems are described in Attachment 1, Section D-2f of this permit. The structure of the building is described in Section B, and run-on or infiltration of precipitation is addressed in Attachment 6, Section F-4b of this permit.

D-8b(3) Site Air Conditions [IDAPA 58.01.05.008 and 58.01.05.012; 40 CFR §§ 264.601(c)(4) and (5), and 270.23(b)]

The climatology and meteorology at the INL are addressed in the *DOE Programmatic Spent Nuclear Fuel Management and INEEL Environmental Restoration and Waste Management Programs Final Environmental Impact Statement* (DOE/EIS –0203F, Volume 1, Appendix B). A copy of this document has already been provided to DEQ.

D-8b(4) Prevention of Air Emissions [IDAPA 58.01.05.008 and 58.01.05.012; 40 CFR §§ 264.601(c) and 270.23(b)]

The NWCF Screening Level Risk Assessment [(SLRA) INEEL, 1999c, *Screening Level Risk Assessment for the New Waste Calcining Facility*, INEEL/EXT-97-000686, Rev. 5a, May] conservatively assessed potential atmospheric releases of all known and potentially present compounds of potential concern (COPC) in the INTEC liquid waste system (including the PEWE, LET&D, and ETS). The emission rate calculations assumed that 100 percent of the inventory (total mass) of organic COPCs in the total tank farm volume of 1,400,000 gallons of liquid waste was released out the INTEC main stack over a period of a year (a few compounds were assumed to have 99% thermal destruction in the calciner). Conservative modeling results indicated that human health and ecological impacts from all organic compounds were significantly less than EPA acceptance criteria for combustion units (1×10^{-5} total risk and 0.25 total hazard index for all COPCs). The majority of these calculated risks resulted from

calculated Products of Incomplete Combustion emissions formed by combustion of the kerosene fuel in the calciner and chlorine in the offgas, not from organic constituents present in the feed. Since the potential mass of COPCs managed by the PEWE, LET&D, and ETS in a year is significantly less than the 1,400,000 gallons of liquid waste assumed to be released in the SLRA, the potential COPC emission rates and resulting environmental impacts from these units' operations will be significantly less than the acceptable values calculated in the NWCF SLRA.

A Risk Assessment that builds upon the existing "Human and Ecological Risk Assessment of Air Emissions from the INTEC Liquid Waste Management System" is included as Appendix D-6 to this permit. Upon agreement by the DEQ with the actions identified in the Risk Assessment Work Plan, a risk assessment was prepared to include emissions from the IWTU and submitted to the DEQ.

An assessment of the risk posed by the IWTU has been prepared and is provided as Appendix D-6 to this permit. The assessment estimates the risk posed by the IWTU and adds it to the combined risk for existing emission sources identified in "Risk Assessment for Air Emissions from the Integrated Waste Treatment Unit and INTEC Liquid Waste Management System," RPT-354, April 2007, to estimate risk to human health and the environment following initiation of operations at the IWTU. The assessment concludes that the risks posed by IWTU emissions and other contributing sources are less than EPA target criteria and that operation of the IWTU will not adversely affect human health or the environment.

D-8b(5) Operating Standards [IDAPA 58.01.05.008 and 58.01.05.012; 40 CFR 264.601(c)(3) and 270.23(a)(2)]

In order to ensure safe and effective operation of the miscellaneous treatment units, the following physical and chemical operational constraints and tolerance limits have been imposed. A list of items prohibited from treatment by these miscellaneous treatment units is provided in Attachment 2, Section C-2a(1) of this permit. The list of instruments to be monitored to ensure operating limits are not exceeded is located in Table D-8, Instrument Table. These instruments are monitored and recorded in the operating record.

Process Equipment Waste Evaporators (EVAP-WL-129 and EVAP-WL-161)

Operational Limits

Total suspended solids	$\geq$ 10% must be transferred through VES-WL-132

Feed Limits

If the feed contains ≥ 50 ppm chlorides the following equation applies:

$[No_3]$ (in *M*olar) ≥ [Cl] (in ppm) x 0.006 + 0.1

Fluoride	maintain at least a 1:1 mole ratio of aluminum to fluoride, as fed
Sulfate	≤ 500 ppm, as fed
Mercury	≤ 260 ppm
Total organic carbon	≤ 800 ppm

Operational Constraints – shutdown of the process is initiated when:

Evaporator operating temperature exceeds 110° C

Specific gravity in the evaporator exceeds 1.3

Liquid Effluent Treatment and Disposal Facility Fractionators (FRAC-WLL-170, FRAC-WLK-171)

Feed Limits

Fluoride	maintain at least a 1:1 mole ratio of aluminum to fluoride, as fed
Mercury	≤ 260 ppm
Total organic carbon	≤ 800 ppm

Operational Constraints – shutdown of the process is initiated when:

Fractionator level drops below 10 in. water column (WC)

Fractionator level rises above 40 in. WC

Differential pressure across the fractionator exceeds 30 in. WC

Temperature on Tray #1 exceeds 265° F

Separator level exceeds 10 in. WC

Differential pressure across each HEPA filter stage exceeds 5 in. WC

Evaporator Tank System (EVAP-NCC-150)

Feed to the ETS originates from liquid wastes stored in the INTEC Tank Farm or from liquid waste newly generated in CPP-659 processes, such as debris treatment, decontamination rinses of process equipment, and moisture de-entrained from tank offgas systems. Feed streams are collected and sampled in VES-NCC-101, -102, -103, -108, -119, or VES-NCD-123 or -129, then analyzed. Laboratory analytical results are then analyzed using a computer model that is based on an industry-standard computer program. By inputting actual INTEC data and confirming accurate output the model has been validated. The model predicts concentrations of chemical species in the evaporator bottoms and overheads during the evaporation process. Iterative runs of the computer model allow determination of the point at which ETS batch operation should end based on prevention of precipitation in the evaporator bottoms in the ETS or after transfer to the Tank Farm. The operating end point is usually defined as a value of specific gravity for the evaporator bottoms.

Modeled concentrations in the evaporator bottoms and overheads are also evaluated for the potential to cause excessive corrosion of the ETS tanks, the Tank Farm tanks, and the offgas system components. Additional iterations of computer modeling are performed, if necessary, to adjust the operating endpoint such that corrosion is minimized. The general basis for the corrosion evaluation is knowledge of the corrosion properties of materials used to fabricate the tanks and components in the service environment. This basis is augmented by specific corrosion studies performed at the INL and elsewhere.

Finally, the modeled evaporator overheads are evaluated to determine what adjustments may be necessary before treatment in the PEWE. The evaporator overheads are sampled after generation to confirm acceptability into the PEWE feed tanks. Final adjustments may be made in the PEWE feed tanks prior to processing the waste through the PEWE.

Once an operating endpoint that optimizes both the precipitation stability and corrosion minimization has been determined, technical personnel document the endpoint and other model output parameters to recommend operation within the defined parameters.

Feed Limits

Fluoride	Maintain at least a 1:1 mole ratio of aluminum to fluoride, as fed, if fluoride is present in the feed
Chlorides	Waste containing > 5,000 ppm chlorides will not be processed in the ETS
Sulfates	Maintain at least a 2:1 mole ratio of sodium to sulfate, as fed if the feed contains ≥ 500 ppm sulfate
Mercury	Waste containing ≥ 3,000 ppm mercury will not be processed in the ETS

Operational Constraints – shutdown of the process is initiated:

When Evaporator operating temperature exceeds 117° C

Before the specific gravity of the liquids in the evaporator equals or exceeds 1.4 as read on D150-1C

IWTU

The IWTU is designed to process wastes currently stored in the INTEC tank farm and any waste that may be generated as NGLW.

Feed Limits

Chloride	Waste containing greater than 5,000 ppm chloride in solution will not be processed in the IWTU;
Fluoride	Waste containing greater than 3,000 ppm fluoride in solution will not be processed in the IWTU;
Mercury	Waste containing greater than 3,000 ppm mercury in solution will not be processed in the IWTU.

Operational Constraints – Waste feed is terminated and other actions initiated as necessary when one or more of the following process conditions occur.

DMR feed rate exceeds 3.5 gpm, based on the maximum anticipated throughput of SBW and NGLW for the IWTU;

The average bed temperature in the DMR drops below 580˚C, to ensure effective reaction conditions are maintained in the fluidized bed;

The average bed temperature in the DMR exceeds 700˚C, due to the potential for bed agglomeration at temperatures greater than 725˚C;

DMR average pressure above the bed exceeds 12 psig, to ensure that Process Gas Filter efficiency is not adversely impacted;

The superficial fluidization velocity in the DMR drops below 0.3 ft/sec;

The hydrogen concentration detected in the DMR process gas drops below 1.0% (dry basis) or exceeds 15% (dry basis) as measured at the Process Gas Filter on a 10-minute rolling average basis, to ensure effective reduction of nitrogen oxides in the DMR;

The average bed temperature in the CRR drops below 775˚C, to ensure effective destruction of organics;

The average bed temperature in the CRR exceeds 1150˚C, to ensure protection of the refractory material;

The oxygen concentration detected in the CRR offgas drops below 0.5% (wet basis), on a 10-minute rolling average basis, to ensure effective destruction of organics and hydrogen;

The pressure above the bed in the CRR is greater than 0 psig (0” water column vacuum):

The temperature at the outlet of the Offgas Cooler exceeds 250˚C, to ensure protection of downstream equipment;

The offgas temperature at the inlet to the Process HEPA Filters or Mercury Adsorber drops below 120˚C, to prevent condensation in downstream equipment;

The offgas temperature at the inlet to the Mercury Adsorbers exceeds 180˚C, to ensure protection of the GAC bed media;

The volume of nitrogen in the Nitrogen Supply System falls below 35,000 standard cubic feet, which is equal to approximately 5 system volume equivalents, to ensure adequate volume of nitrogen to purge the system for shutdown;

If the differential pressure of any Process HEPA filter element exceeds 5" water column or suddenly decreases, the affected HEPA must be isolated and the filter replaced (does not require termination of waste feed);

If one of the in-bed thermocouples differs from the average temperature by more than 50°C, then corrective action will be taken including, as necessary:

- Checking the operability of the varying thermocouple;
- Modifying process parameters such as decreasing operating temperature, decreasing or isolating injection lines, and/or increasing the steam fluidizing gas rate to control any temperature variation in the fluidized bed;
- Decreasing or terminating the waste feed to the DMR;
- Replacing steam and oxygen fluidizing gas flow with nitrogen.

D-8b(6) Site Hydrogeologic Conditions [IDAPA 58.01.05.008 and 58.01.05.012; 40 CFR 264.601(a)(2), (3), and (4), 264.601(b)(3) and (5), and 270.23(b)]

The hydrology conditions at the INL are addressed in the *DOE Programmatic Spent Nuclear Fuel Management and INEEL Environmental Restoration and Waste Management Programs Final Environmental Impact Statement* (DOE/EIS - 0203F, Volume 1, Appendix B). A copy of this document has already been provided to DEQ.

D-8b(7) Site Precipitation [IDAPA 58.01.05.008; 40 CFR 264.601(b)(4)]

Site precipitation is addressed in *DOE Programmatic Spent Nuclear Fuel Management and INEEL Environmental Restoration and Waste Management Programs Final Environmental Impact Statement* (DOE/EIS - 0203F, Volume 1, Appendix B). A copy of this document has already been provided to DEQ.

D-8b(8) Groundwater Usage [IDAPA 58.01.05.008; 40 CFR 264.601(a)(5)]

The ground water usage is addressed in *DOE Programmatic Spent Nuclear Fuel Management and INEEL Environmental Restoration and Waste Management Programs Final Environmental Impact Statement* (DOE/EIS - 0203F, Volume 1, Appendix B). A copy of this document has already been provided to DEQ.

D-8b(9) Surface Waters and Surface Soils [IDAPA 58.01.05.008; 40 CFR 264.601(b)(6), (7), and (8)]

The surface waters and surface soils are addressed in *DOE Programmatic Spent Nuclear Fuel Management and INEEL Environmental Restoration and Waste Management Programs Final Environmental Impact Statement* (DOE/EIS - 0203F, Volume 1, Appendix B). A copy of this document has already been provided to DEQ.

D-8b(10) Area Land Use [IDAPA 58.01.05.008 and 58.01.05.012; 40 CFR 264.601(a)(6) and (b)(9), and 270.23(b)]

The area land uses is addressed in *DOE Programmatic Spent Nuclear Fuel Management and INEEL Environmental Restoration and Waste Management Programs Final Environmental Impact Statement* (DOE/EIS - 0203F, Volume 1, Appendix B). A copy of this document has already been provided to DEQ.

D-8b(11) Migration of Waste Constituents [IDAPA 58.01.05.008; 40 CFR 264.601(a)(7)]

The PEWE, LET&D, ETS, and IWTU are not land treatment facilities and do not involve surface or subsurface soils; hence, application of this section is not appropriate.

D-8b(12) Evaluation of Risk to Human Health and the Environment [IDAPA 58.01.05.008; 40 CFR 264.601(a)(8) and (9), 264.601(b)(10) and (11), and 264.601(c)(6) and (7)]

For information on the risk to human health and the environment, see Section D-8b(4).

Table D-8. Instrument Table

INSTRUMENT TABLE						
	Point (DCS Tag Name)	P&ID	Control Parameter	Description	Required For Operation	O&M (Mos)-
Evaporator VES-WL-161	L-WL-161	094276-1	Level	Level Controller WL-161 Evaporator	Yes	12
	D-WL-161	094276-1	Density	Density WL-161 Evaporator	Yes	12
	F-WL-300	094276-1	Flow	Steam Flow for HE WL-300	Yes	12
	T-WL-161-1	094276-1	Temperature	WL-161 Liquid Temperature	1 of 3 Instruments must be in service to operate.	12
	T-WL-161-2	094276-1	Temperature	WL-161 Vapor temperature		12
	T-WL-161-3	094276-1	Temperature	WL-162 Vapor temperature		12
	T-WL-301-1	094276-3	Temperature	WL-301 Condensate Out Temperature	Yes	24
	R-WL-156	172280	Radiation	Radiation of 604 Steam Condensate	Yes	12
Evaporator VES-WL-129	D-WL-129	094276-1	Density	WL-129 Evaporator Density	Yes	12
	L-WL-129	094276-1	Level	WL-129 Evaporator Level / Controller	Yes	12
	F-WL-307	094276-1	Flow	Steam to WL-307 Reboiler	Yes	12
	T-WL-129-1	094276-1	Temperature	WL-129 Liquid Temperature	1 of 3 Instruments must be in service to operate.	12
	T-WL-129-2	094276-1	Temperature	WL-129 Vapor temperature		12
	T-WL-129-3	094276-1	Temperature	WL-130 Vapor temperature		12
	T-WL-308-1	094276-1	Temperature	WL-308 Condensate Out Temperature	Yes	24
	R-WL-156	172280	Radiation	Radiation of 604 Steam Condensate	Yes	12
LET&D HVAC and Utilities	P WLR 389-2	356640/1	Pressure	HP Steam to Air Preheater	Yes	24
LET&D FRAC-WLK-171	D-WLK- 171-2	356596-8	Density	Fractionator #1 Bottoms Density	Yes	12
	L- WLK- 171-1	356596-8	Level	Fractionator #1 Level	Yes	12
	L- WLK- 171-39	356596-9	Level	Cell #1 Sump Level	Yes	12
	L- WLK- 197-2	356596-10	Level	Feed Tank Level	Yes	12
	P- WLK- 171-3	356596-8	Pressure	Fractionator #1 Vacuum	Yes	12
	T- WLK- 171-19	356596-8	Temperature	Temperature of Fractionator #1 Tray #1	1 of 2 must be in service to operate	12
	T- WLK- 171-21	356596-8	Temperature	Temperature of Fractionator #1 Bottoms		12
	T- WLK- 199-2	356596-7	Temperature	Temperature of Separator #1	Yes	12
	R- WL- 604-1	172280	Radiation	Radiation of 604 Process Condensate	1 of 2 must be in service to operate	24
	R- WL- 604-2	172280	Radiation	Radiation of 604 Process Condensate		24

Table D-8. Instrument Table (continued)

INSTRUMENT TABLE						
	Point (DCS Tag Name)	P&ID	Control Parameter	Description	Required For Operation	O&M (Mos)-
LET&D FRAC-WLL-170	D- WLL- 170-2	356596-5	Density	Fractionator #2 Bottoms Density	Yes	12
	L-WLL-170-1	356596-5	Level	Fractionator #2 Level	Yes	12
	L- WLL- 169-1	356596-3	Level	Bottoms Tank Sump Level	Yes	12
	L- WLL- 170-38	356956-6	Level	Cell #2 Sump Level	Yes	12
	L- WLL- 195-2	356596-3	Level	Bottoms Tank Level	Yes	12
	P- WLL- 170-3	356596-5	Level	Fractionator #2 Vacuum	Yes	12
	T- WLL- 170-19	356596-5	Temperature	Temperature of Fractionator #2 Tray #1	1 of 2 must be in service to operate	12
	T- WLL- 170-21	356596-5	Temperature	Temperature of Fractionator #2 Bottoms		12
	R- WL- 604-1	172280	Radiation	Radiation of 604 Process Condensate	1 of 2 must be in service to operate	24
	R- WL- 604-2	172280	Radiation	Radiation of 604 Process Condensate		24
LET&D off-gas Train #2	PD- WLR- 176-1	356596-1	Pressure Diff	Vapor HEPA Filter #2 Differential Pressure	Yes	12
	PD- WLR- 176-2	356596-1	Pressure Diff	Vapor HEPA Filter #2 Differential Pressure	Yes	12
	T- WLR- 394-1	356596-1	Temperature	Superheater #2 Outlet Temperature	Yes	12
	P- WLR- 394-3	356640-1	Pressure	HP Steam to Superheater #2	Yes	24
	T- WLR- 176-5	356596-5	Temperature	Vapor HEPA Filter #2 Outlet Temperature	Yes	12
	T- WLQ- 298-5	356596-1	Temperature	Temperature of Vapor to Stack	Yes	12
LET&D off-gas Train #1	PD- WLR- 177-1	356596-2	Pressure Diff	Vapor HEPA Filter #1	Yes	12
	PD- WLR- 177-2	356596-2	Pressure Diff	Vapor HEPA Filter #1	Yes	12
	T- WLR –395-1	356596-2	Temperature	Superheater #1 Outlet Temperature	Yes	12
	T- WLR 177-5	356596-2	Temperature	Vapor HEPA Filter #1 Outlet Temperature	Yes	12
	P- WLR 395-3	356640-1	Pressure	HP Steam to Superheater #1	Yes	24
	T- WLQ 298-5	356596-1	Temperature	Temperature of Vapor to Stack	Yes	12

Table D-8. Instrument Table (continued)

INSTRUMENT TABLE						
	Point (DCS Tag Name)	P&ID	Control Parameter	Description	Required For Operation	O&M (Mos)-
Evaporator Feed Sediment Tank VES-WL-132	L-WL-132-1	057947	Level	WL-132 Level	Yes	12
Evaporator Feed Collection Tank VES-WL-133	L-WL-133-2	183137	Level	WL-133 Level	Yes	12
Vault Sump for VES-WL-132/133	L-WL-132/133S	057947	Level	WL-132 /-133 Vault Sump Level	Yes	12
Bottoms Tank VES-WL-101	L-WL-101-1	057946	Level	WL-101 Level	Yes	12
	LRA-WL-101	057946	Level	WL-101 Level	Yes	12
Surge Tank VES-WL-102	L-WL-102	057946	Level	WL-102 Level	Yes	12
Vault Sump for VES-WL-101/102	L-WL-101/102S	057946	Level	WL-101/102 Vault Sump Level Gauge	Yes	12
Evaporator Head Tank VES-WL-109	L-WL-109	094276	Level	WL-109 Level	Yes	12
Sump for EVAP-WL-129 (WL-129 Pump Pit)	L-WL-528	094276	Level	Pump Pit Sump Level	Yes	12
Process Condensate Surge Tank VES-WL-134	L-WL-134	094276-3	Level	WL-134 Level	Yes	12
Sump for EVAP-WL-161 (SU-WL-147)	L-WL- 147- 1	368931	Level	SU-WL-147 Level for Evaporator Cell	Yes	12

Table D-8. Instrument Table (continued)

INSTRUMENT TABLE						
	Point (DCS Tag Name)	P&ID	Control Parameter	Description	Required For Operation	O&M (Mos)-
Process Condensate Surge Tank VES-WL-131	L-WL- 131	094276-3	Level	WL-131 Level	Yes	12
Process Off-Gas Condensate Knock-Out Pot VES-WL-108	T-WL-108	094276-3	Temperature	WL-108 Liquid Temperature	Yes	24
Bottoms Collection Tank VES-WL-111	L-WL-111	178989	Level	WL-111 Level	Yes	12
	T-WL-511	178989	Temperature	Temperature of Jet WL-511 Discharge	Yes	12
VES-WL-104/105 Vault Sump	LA-WL-950	111804	Level	WL-104/105 Vault Sump Level	Yes	12
Tank Farm Tank VES-WM-100	L-WM-100-1	057945	Level	Level WM-100 (DCS)	1 of 2 must be in service to operate	12
	LRA-WM-100	103300	Level	Level WM-100		12
Sump For VES-WM-100	L-WM-100S-1	057946	Level	WM-100 Vault Sump Level	1 of 2 must be in service to operate	12
	LRA-WM-100S	057946	Level	WM-100 Vault Sump Level		12
Tank Farm Tank VES-WM-101	L-WM-101-1	057945	Level	Level WM-101 (DCS)	1 of 2 must be in service to operate	12
	LRA-WM-101	103300	Level	Level WM-101		12
Tank Farm Tank VES-WM-102	L-WM-102-1	057945	Level	Level WM-102 (DCS)	1 of 2 must be in service to operate	12
	LRA-WM-102	103300	Level	Level WM-102		12

Table D-8. Instrument Table (continued)

INSTRUMENT TABLE						
	Point (DCS Tag Name)	P&ID	Control Parameter	Description	Required For Operation	O&M (Mos)-
Vault Sump for VES-WM-101/102	L-WM-101/102S-1	057945	Level	WM-101/-102 Vault Sump Level	1 of 2 must be in service to operate	12
	LRA-WM-101/102S	057945	Level	WM-101/-102 Vault Sump Level		12
Process Waste Liquid System VES-WL-135	L-WL-135-1	368921	Level	D5 Valve Box Collection Tank Level	Yes	12
Sump for VES-WL-135 (SU-WL-135)	L-WL-135-2	368921	Level	D5 Valve Box Sump Level	Yes	12
Process Waste Liquid System VES-WL-136	L-WL-136-1	368922	Level	D8 Valve Box Collection Tank Level	Yes	12
Sump for VES-WL-136 (SU-WL-136)	L-WL-136-2	368922	Level	D8 Valve Box Sump Level	Yes	12
Process Waste Liquid System VES-WL-137	L-WL-137-1	368923	Level	CPP-649 Process Filter Room Collection Tank Level	Yes	12
Sump for VES-WL-137 (SU-WL-137)	L-WL-137-2	368923	Level	CPP-649 Process Filter Room Sump Level	Yes	12
Process Waste Liquid System VES-WL-138	L-WL-138-1	368924	Level	VOG Blower Room Collection Tank Level	Yes	12
Sump for VES-WL-138 (SU-WL-138)	L-WL-138-2	368924	Level	VOG Blower Room Sump Level	Yes	12
Process Waste Liquid System VES-WL-139	L-WL-139-1	368925	Level	VOG Filter Room Collection Tank Level	Yes	12
Sump for VES-WL-139 (SU-WL-139)	L-WL-139-2	368925	Level	VOG Filter Room Sump Level	Yes	12

Table D-8. Instrument Table (continued)

INSTRUMENT TABLE						
	Point (DCS Tag Name)	P&ID	Control Parameter	Description	Required For Operation	O&M (Mos)-
Process Waste Liquid System VES-WL-142	L-WL-142-1	368927	Level	CPP-604 Middle Cell Collection Tank Level	Yes	12
Sump for VES-WL-142 (SU-WL-142)	L-WL-142-2	368927	Level	CPP-604 Middle Cell Sump Level	Yes	12
Process Waste Liquid System VES-WL-144	L-WL-144-1	368929	Level	CPP-604 North Cell Collection Tank Level	Yes	12
Sump for VES-WL-144 (SU-WL-144)	L-WL-144-2	368929	Level	CPP-604 North Cell Sump Level	Yes	12
Process Waste Liquid System VES-WL-150	L-WL-150-1	179009	Level	WL-150 Level	Yes	12
Process Condensate Collection Tanks VES-WL-106	Q-WL-106	094276-3	Volume	WL-106 Volume	Yes	12
Process Condensate Collection Tanks VES-WL-107	Q-WL-107	094276-3	Volume	WL-107 Volume	Yes	12
Process Condensate Collection Tanks VES-WL-163	Q-WL-163	094276-3	Volume	WL-163 Volume	Yes	12
Sump for VES-WL-106/107/163 (SU-WL-145) (SU-WL-146)	L-WL-145-1	368930	Level	SU-WL-145 Level Condensate Cell	Yes	12
	L-WL-146-1	368930	Level	SU-WL-146 Level Condensate Cell	Yes	12
Sump SU-WL-148	L-WL-148-1	368931	Level	Main Stack Sump Level	Yes	12

Table D-8. Instrument Table (continued)

INSTRUMENT TABLE						
	Point (DCS Tag Name)	P&ID	Control Parameter	Description	Required For Operation	O&M (Mos)-
Evaporator VES-NCC-150	L150-1C	13425102	Level	Evaporator Level	Yes	12
	D150-1C	13425102	Density	Evaporator Density	Yes	12
	P150-1C	13425102	Pressure	Evaporator Pressure	Yes	12
	T351-1C	134251	Temperature	Condenser HE-NCC-351 Drain Line Temperature	Yes	12
	T150-1C	13425102	Temperature	Vapor Temperature Above Mesh	2 of 10 Instruments must be in service to operate	12
	T150-2C	13425102	Temperature	Vapor Temperature Above Mesh		12
	T150-3C	13425102	Temperature	Vapor Temperature Below Mesh		12
	T150-4C	13425102	Temperature	Vapor Temperature Below Mesh		12
	T150-5C	13425102	Temperature	Evaporator Liquid Temperature		12
	T150-6C	13425102	Temperature	Evaporator Liquid Temperature		12
	T150-7C	13425102	Temperature	Evaporator Liquid Temperature		12
	T150-8C	13425102	Temperature	Evaporator Liquid Temperature		12
	T150-9C	13425102	Temperature	Evaporator Liquid Temperature		12
	T150-10C	13425102	Temperature	Evaporator Liquid Temperature		12
Blend Tank VES-NCC-101	L101-1C	133410	Level	Blend Tank Level	Yes	12
Hold Tank VES-NCC-102	L102-1C	133411	Level	Blend and Hold Tank Level	Yes	12
Hold Tank VES-NCC-103	L103-1C	133412	Level	Blend and Hold Tank Level	Yes	12
Constant Head Feed Tank VES-NCC-152	L152-1C	13425103	Level	Feed Tank Level	Yes	12
Fluoride Hot Sump Tank VES-NCC-119	L119-1C	133409	Level	Bottoms Collection Tank Level	Yes	12
	D119-1C	133409	Density	Bottoms Collection Tank Density	Yes	12
Non-Fluoride Hot Sump Tank VES-NCC-122	L122-1C	133408	Level	Overheads Collection Tank Level	Yes	12
	D122-1C	133408	Density	Overheads Collection Tank Density	Yes	12
Scrub Hold Tank VES-NCC-108	L108-1C	133424	Level	Scrub Hold Tank Level	Yes	12

Table D-8. Instrument Table (continued)

INSTRUMENT TABLE						
	Point (DCS Tag Name)	P&ID	Control Parameter	Description	Required For Operation	O&M (Mos)
POG Vent Condenser Knock Out Drum VES-NCC-136	L136-1C	133428	Level	Knock Out Drum Level	Yes	12
Mist Collector VES-NCC-116	L116-1C	133428	Level	Mist Collector Level	Yes	12
	P116-1C	133428	Pressure	Mist Collector differential pressure	Yes	12
Waste Feed Tank VES-SRC-131	L-C-131-2	632760	Level	Monitors liquid waste feed level.	Yes	12
Liquid Waste Feed System	FC-C-540-11 FC-C-540-12 FC-C-540-13 FC-C-540-14 FC-C-540-15 FC-C-540-16	632760	Flow	Monitors the liquid waste feed injector atomizing gas.	Yes, although one, two, or three feeders can be used. If a feeder is used its corresponding gas flow meter must be in service – the other flow meters can be on-line or off-line	12
Liquid Waste Feed System	FC-C-140-1 FC-C-140-2 FC-C-140-3	632760	Flow	Monitors liquid waste feed flow.	Yes, although one, two, or three feeders can be used. If a feeder is used its corresponding waste feed flow meter must be in service – the other flow meters can be on-line or off-line	12

Table D-8. Instrument Table (continued)

INSTRUMENT TABLE						
	Point (DCS Tag Name)	P&ID	Control Parameter	Description	Required For Operation	O&M (Mos)
DMR	T-C-140-2A T-C-140-2B T-C-140-2C T-C-140-3A T-C-140-3B T-C-140-3C T-C-140-4 T-C-140-5A T-C-140-5B T-C-140-5C T-C-140-12A T-C-140-12B T-C-140-12C	632762	Temperature	Monitors fluidized bed temperature.	7 of 13 instruments must be in service to operate	12
DMR	P-C-140-1 P-C-140-7	632762	Pressure	Monitors above-bed pressure.	One of two, although they can be temporarily taken out of service to calibrate or purge/clean without shutting down the process.	12
DMR	FC-B-365-5 (steam) FC-B-365-2 (nitrogen)	632801	Flow	Monitors fluidizing gas flow.	Yes	12
Process Gas Filter	AY-C-153-1	632763	Concentration	Monitors H_2. Shuts down IWTU.	Yes	12
DMR	P-C-153-1	632763	Pressure	Monitors differential pressure in the process gas filter.	Yes, although they can be temporarily taken out of service to calibrate or purge/clean without shutting down the process.	12

Table D-8. Instrument Table (continued)

INSTRUMENT TABLE						
	Point (DCS Tag Name)	P&ID	Control Parameter	Description	Required For Operation	O&M (Mos)-
CRR	T-C-160-8 T-C-160-16 T-C-160-25 T-C-160-26 T-C-160-4 T-C-160-12	632764	Temperature	Monitors fluidized bed temperature.	3 of 6 instruments must be in service to operate	12
CRR	A-C-760-1A A-C-760-1B A-C-760-1C	632764	Concentration	Monitors O_2.	Yes, one of three must be in operation, although two at a time can be temporarily taken out of service to calibrate or purge/clean without shutting down the process.	12
CRR	P-C-760-10 P-C-760-16	632764	Pressure	Monitors outlet pressure.	Yes, one of two must be in operations, although they can be temporarily taken out of service to calibrate or purge/clean without shutting down the process.	12

Table D-8. Instrument Table (continued)

INSTRUMENT TABLE						
	Point (DCS Tag Name)	P&ID	Control Parameter	Description	Required For Operation	O&M (Mos)-
Offgas System	T-C-160-1A T-C-160-1B	632766	Temperature	Monitors offgas temperature after the cooler.	Yes, one of the two instruments must be in service. They can be temporarily taken out of service to calibrate or purge/clean without shutting down the process.	12
Offgas Filter	P-C-160-3	632765	Pressure	Monitors the differential pressure across the offgas filter.	Yes, although they can be temporarily taken out of service to calibrate or purge/clean without shutting down the process.	12
Process Cell Sump	L-C-190-1	632821	Level	Monitors liquid level in sump.	Yes	12
HEPA Filters /GAC Bed	T-C-140-3A (Filter outlet) T-C-140-3B (GAC inlet)	632797	Temperature	Monitors temperature.	Yes	12
HEPA Filters	PD-H-140-5A PD-H-140-5B PD-H-140-5C PD-H-140-5D PD-H-140-6A PD-H-140-6B PD-H-140-6C PD-H-140-6D	632797	Pressure	Monitors the differential pressure in the individual HEPA filters	Yes, although they can be temporarily taken out of service to calibrate or purge/clean without shutting down the process.	12

Table D-8. Instrument Table (continued)

INSTRUMENT TABLE						
	Point (DCS Tag Name)	P&ID	Control Parameter	Description	Required For Operation	O&M (Mos)-
DMR Fluidizing Gas	T-B-365-17	632801	Temperature	Monitors DMR fluidizing gas temperature.	Yes	12
Fire Water Collection Tank	L-E-196-1	632826	Level	Monitors Level	No	12
TK-SRH-141	L-H-141-1	632799	Level	Monitors Level	Yes	12

Note: Some DCS instrumentation shown on P&IDs may terminate at the transmitter. For example, an instrument named L-WL-XYZ-1 will show LT-XYZ-1.

APPENDIX D-1

P-SCR-231 Feed Pump Specifications

Rev 6. 3/3/2009

PROCESS CONDITIONS OF SERVICE - CENTRIFUGAL PUMPS

REV

1 APPLICABLE TO: ○ STUDY ○ INQUIRY ● PURCHASE ○ AS-BUILT TAG NO. P-SRC-231
2 CLIENT CH2M WG Idaho LLC LOCATION Idaho National Laboratory
3 FACILITY ICP Integrated Waste Treatment Unit SERVICE WASTE FEED PUMP
4 NO. REQ 1 + spare PUMP SIZE ■ 2 x 4 - 11 A TYPE ■ Horiz. Centrifugal NO. STAGES ONE
5 MANUFACTURER ■ Goulds MODEL ■ 3700 SERIAL NO. ■
6 INFORMATION BELOW TO BE COMPLETED: ○ BY PURCHASER ■ BY MANUFACTURER ○ BY MFR OR PURCHASER

7 **GENERAL**

8	PUMPS TO OPERATE IN (PARALLEL)		NO. MOTOR DRIVEN	2 (1 Warehouse spare)	NO. TURBINE DRIVEN N/A
9	(SERIES) WITH	N/A	PUMP ITEM NO.	P-SRC-231	PUMP ITEM NO. ---
10	GEAR ITEM NO.	N/A	MOTOR ITEM NO.	---	TURBINE ITEM NO. ---
11	GEAR PROVIDED BY	---	MOTOR PROVIDED BY	PUMP SUPPLIER	TURBINE PROVIDED BY ---
12	GEAR MOUNTED BY	---	MOTOR MOUNTED BY	PUMP SUPPLIER	TURBINE MOUNTED BY ---
13	GEAR DATA SHT. NO.	---	MOTOR DATA SHT. NO.	See pg 8 & 9	TURBINE DATA SHT. NO. ---

14 **OPERATING CONDITIONS**

15 CONDITIONS:	MINIMUM	NORMAL	RATED MAX.
16 ● CAPACITY	30 GPM	30 GPM	80 GPM
17 ■ IMPELLER SPEED	RPM	1645 RPM	1880 RPM
18 ● SUCTION PRESSURE	-3.8 PSIG	-3.8 PSIG	-5.4 PSIG
19 ● DISCHARGE PRESSURE	50 PSIG	63 PSIG	65 PSIG
20 ● DIFFERENTIAL PRESSURE	53.8 PSI	66.8 PSI	67 PSI
21 ● DIFFERENTIAL HEAD (TDH)	93.4 FT	116 FT	148 FT
22 ● NPSHA	8.1 FT	8.1 FT	5.3 FT

23 SERVICE: ● CONT. ○ INTERMITTENT (STARTS/DAY)
24 ○ PARALLEL OPERATION REQ'D ● STARTING CONDITIONS: Loaded

25 **SITE AND UTILITY DATA**

26 LOCATION:
27 ● INDOOR ● HEATED ○ UNDER ROOF
28 ○ OUTDOOR ○ UNHEATED ○ PARTIAL SIDES
29 ○ GRADE ○ MEZZANINE ● Pipe Chase
30 ● ELECTRIC AREA CLASSIFICATION - Unclassifed
31 CL -- GR -- DIV --
32 ○ WINTERIZATION REQ'D ○ TROPICALIZATION REQ'D.
33 SITE DATA (SEE GEN. NOTE #1, DATA SHT PG. 3)
34 ● ALTITUDE 4913.5 (FT) BAROMETER 12.38 (PSIA)
35 ● RANGE OF AMBIENT TEMPS: MIN/MAX. 52 / 130 (°F)
36 ○ RELATIVE HUMIDITY: MIN / MAX / (%)
37 UNUSUAL CONDITIONS: ○ DUST ○ FUMES
38 ● OTHER AREA INACCESSIBLE FOR NORM. MAINTENANCE
39 ○ UTILITY CONDITIONS:
40 STEAM: N/A DRIVERS HEATING
41 MIN (PSIG) (°F) (PSIG) (°F)
42 MAX (PSIG) (°F) (PSIG) (°F)

43 ELECTRICITY	DRIVERS	HEATING	CONTROL	SHUTDOWN
44 VOLTAGE	460	--	--	--
45 HERTZ	60	--	--	--
46 PHASE	3	--	--	--

47 COOLING WATER:
48 TEMP. INLET (°F) MAX. RETURN (°F)
49 PRESS. NORM 55 (PSIG) DESIGN 225 (PSIG)
50 MIN RETURN (PSIG) MAX ALLOW DP (PSI)

SITE AND UTILITY DATA (CONT'D)

SEAL WATER SOURCE Filtered pressure regulated treated water
PRESSURE: MIN.: 55 PSIG MAX.: 120 PSIG DESIGN 225 PSIG
CHLORIDE CONCENTRATION (PPM) 6.72 mg/l (PPM)
INSTRUMENT AIR: MAX/MIN PRESS n/a / -- (PSIG)

LIQUID

● LIQUID TYPE OR NAME SODIUM BEARING WASTE (RADIOACTIVE SLURRY)
SEE REMARKS BELOW FOR FURTHER DESCRIPTION OF LIQUID

	MIN.	NORMAL	MAX.
PUMPING TEMP (°F)	52	79	130 Note 11 pg 3
VAPOR PRESS (PSIA)	0.13	2.20	2.20
RELATIVE DENSITY (SG)	1	1.33	1.33 @ 130°F
VISCOSITY (cP)		100	

○ SPECIFIC HEAT, Cp (BTU/LB °F)
● CORROSIVE/EROSIVE AGENT See Remark 2. page 2 below
● CHLORIDE CONCENTRATION (PPM) 800
○ H_2S CONCENTRATION (PPM) NA
LIQUID ● HAZARDOUS ○ FLAMMABLE
● OTHER Water or Decon Solution (2 Molar Nitric Acid Solution)

PERFORMANCE

PROPOSAL CURVE NO. 6552-0 ■ RPM Variable
■ IMPELLER DIA. RATED 11.12 MAX. 11.125 MIN. 11.125 (IN.)
■ 30 gpm: RATED POWER 6 (BHP) EFFICIENCY 15 (%)
■ 80 gpm: RATED POWER 12.5 (BHP) EFFICIENCY 33 (%)
■ MINIMUM CONTINUOUS FLOW:
THERMAL (GPM) STABLE 26 (GPM)
■ PREFERRED OPERATING REGION TO (GPM)
■ ALLOWABLE OPERATING REGION TO (GPM)
■ MAX HEAD @ RATED IMPELLER (FT)
■ MAX POWER @ RATED IMPELLER (BHP)
■ NPSHR AT 30/100 gpm RATED CAPACITY (FT)
● SUCTION SPECIFIC SPEED
● MAX. SOUND PRESS. LEVEL REQ'D (dBA)
■ EST MAX SOUND PRESS. LEVEL (dBA)

REMARKS: 1. Solids content ' 200 grams/liter
2. Corrosion/erosion due to up to 6 Molar nitric acid concentration for slurry.
3. Solids size range from 0.5 to 100 microns.

51 NOTES: (1) SUPPLIER SHALL PROVIDE TWO COMPLETE UNITS - ONE TO BE INSTALLED

ISSUE	DATE	SHEET	PROJECT / REQ'N
6	3/3/2009	1 OF 10	25051

EQUIPMENT DATA SHEET - CENTRIFUGAL PUMP

REV

APPLICABLE TO: ○ STUDY ○ INQUIRY ● PURCHASE ○ AS-BUILT

Client:	CH2M WG Idaho LLC	Tag No.:	P-SRC-231
Facility:	ICP Integrated Waste Treatment Unit	Service:	Waste Feed Pump
Location:	Idaho National Laboratory - Scoville, ID	No. Req'd:	1 + spare
Manufacturer:	Goulds	Model & Type:	3700 horizontal centrifugal

GENERAL NOTES:

1. N/A

2. Pump shall be a horizontal centrifugal pump in accordance with API-610. Pump arrangement shall be as shown on the Data Sheets, sheet 7.

3. Priming of the suction line and pump system shall be accomplished by the use of an eductor in the discharge piping to draw pumping fluid from the tank and through the pump.

4. Decontamination solution will be flushed through the pump into the tank, prior to performing maintenance.

5. The pump baseplate shall be installed on a stainless steel mounting plate located on a concrete floor.

6. Supplier shall provide pump allowable nozzle loads with proposal and after order with Supplier Data.

7. Pump shall operate at normal flow rate and up to rated flow rate. VFD shall be provided by Buyer to allow pump operation between both design points on the pump curves.

8. N/A

9. Supplier shall complete all information requested on the Data Sheets or the data requested from the manufacturer on the NEMA Frame Motor Data Sheet. If any of the requested information is not applicable, then the Pump Supplier shall mark the information "N/A" for not applicable.

10. The lubricants used on the motor bearing shall be Exxon Unirex or Chevron SRI-2 grease Pump shall be shipped without lubrication oil. Plant Operations will fill oil reservoir with oil that will comply with manufacturer's recommendations.

11. The slurry is pumped from a tank that can absorb heat from the surroundings up to 130 $^{\circ}$F. The pump is located in a pipe chase which is ventilated to maintain a temperature no higher than 125 $^{\circ}$F.

12. All accessories/components (seal water system, drive shafts, seals, couplings, baseplate, etc.) not of stainless steel shall, be rated for washdown duty using 2 molar nitric acid solution.

13. Pump pressure boundary shall be designed to a minimum of the piping design pressure of 180 psig. Seal water system components shall be designed to a maximum pressure of 225 psig.

14. Supplier shall complete and correct these data sheets and submit to Buyer for review.

EQUIPMENT DATA SHEET - CENTRIFUGAL PUMPS

REV

3 APPLICABLE TO: ○ STUDY ○ INQUIRY ● PURCHASE ○ AS-BUILT TAG NO. P-SRC-231
4 CLIENT CH2M WG Idaho LLC LOCATION Idaho National Laboratory
5 FACILITY ICP Integrated Waste Treatment Unit SERVICE WASTE FEED PUMP
6 NO. REQ 1 + spare PUMP SIZE ■ 2 x 4 - 11 A TYPE ■ Horiz. Centrifugal NO. STAGES ONE

CONSTRUCTION

9 **APPLICABLE STANDARD:**
10 ● API 610 10TH EDITION
11 ● OTHER HI (SEE REMARKS)
12 **PUMP TYPE:** SEE SKETCH PAGE 8
13 ● OH2 ○ BB1 ○ VS1 ○ VS6
14 ○ OH3 ○ BB2 ○ VS2 ○ VS7
15 ○ OH6 ○ BB3 ○ VS3 ○ OTHER
16 ○ BB4 ○ VS4
17 ○ BB5 ○ VS5
18 ■ **NOZZLE CONDITIONS:** See Note 2 below

	SIZE (IN)	FLANGE RATING	FAC'G	POSITION
Note 2				
SUCTION	4	300 lb	RF	top
DISCHARGE	2	300 lb	RF	end
BALANCE DRUM				

24 **PRESSURE CASING CONNECTIONS:**

	NO.	SIZE (NPS)	TYPE
☐ DRAIN	none		
☐ VENT	none		
☐ PRESSURE GAUGE	none		
☐ TEMP GAUGE	none		
☐ WARM-UP			
☐ BALANCE / LEAK-OFF			

33 ○ CYLINDRICAL THREADS REQUIRED
34 **CASING MOUNTING:**
35 ☐ CENTERLINE ☐ NEAR CENTERLINE
36 ☐ FOOT ☐ SEPARATE MOUNTING PLATE
37 ☐ IN-LINE
38 **CASING SPLIT:**
39 ☐ AXIAL ■ RADIAL
40 **CASING TYPE:** ADVISE
41 ☐ SINGLE VOLUTE ☐ MULTIPLE VOLUTE ☐ DIFFUSER
42 ○ OVERHUNG ○ BETWEEN BEARINGS ○ BARREL
43 **CASE PRESSURE RATING:** Note 13, sheet 2
44 ■ MAX ALLOWABLE WORKING PRESSURE (PSIG)
46 @ (°F)
47 ■ HYDROTEST PRESSURE (PSIG)
48 ● SUCT'N PRESS. REGIONS MUST BE DESIGNED FOR MAWP
49 **ROTATION:** (VIEWED FROM COUPLING END) ADVISE
50 ☐ CW ☐ CCW
51 ○ IMPELLERS INDIVIDUALLY SECURED
52 **REMARKS:**
53
54 ● BOLT PUMP TO BASEPLATE AND BASEPLATE TO MTG PL
55 **SHAFT:**
56 ■ SHAFT DIAMETER AT COUPLING (IN)

CONSTRUCTION (CONT)

■ SHAFT DIAMETER BETWEEN BEARINGS (IN)
■ SPAN BETWEEN BEARING CENTERS (IN)
■ SPAN BETWEEN BEARING & IMPELLER (IN)
REMARKS

COUPLINGS: (3.2.2) DRIVER - PUMP
● MAKE Metastream
■ MODEL TSCS 0013-S.F. compliant to API 610 Standard
■ RATING (HP/100 RPM)
● LUBRICATION NON-LUBRICATED
○ LIMITED END FLOAT REQUIRED
○ SPACER LENGTH (IN)
● SERVICE FACTOR 1.0
DRIVER HALF COUPLING MOUNTED BY:
● PUMP MFR. ○ DRIVER MFR. ○ PURCHASER
○ COUPLING
BASEPLATES:
☐ API BASEPLATE NUMBER (APPENDIX M)
● NON-GROUT CONSTRUCTION: MATERIAL: 304 OR 316 SS
REMARKS: PUMP SHALL BE MOUNTED ON A HEAVY DUTY RIGID BASEPLATE. INSTALLATION SHALL NOT BE GROUTED. BASEPLATE SHALL BE SUITABLE FOR REMOTE INSTALLATION

MATERIALS

○ APPENDIX H CLASS API A-8 (Goulds A-8N)
○ MIN DESIGN METAL TEMP 40 (°F)
■ BARREL/CASE 316L IMPELLER 316L GLAND 316 SS
■ CASE/IMPELLER WEAR RINGS 316L \ Nitronic 60
■ SHAFT 316 SS (Note (3)) ■ BEARING FRAME Stainless Steel
■ DIFFUSERS 316L ■ BOLTING Stainless Steel
■ COUPLING SPACER/HUBS Stainless Steel
■ COUPLING DIAPHAGMS (DISKS) Stainless Steel
REMARKS:
All wear parts shall be chrome hardened for corrosion resistance.
See Note (3) below

BEARINGS AND LUBRICATION

BEARING (TYPE/MFR-NO.): Ball /
■ RADIAL Ball double row / 7312BEGAM
■ THRUST Ball single row / 6213 Inboard
○ REVIEW AND APPROVE THRUST BEARING SIZE
LUBRICATION: See note 10, sheet 2
○ GREASE ○ FLOOD ■ RING OIL
○ FLINGER ○ PURGE OIL MIST ○ PURE OIL MIST
○ CONSTANT LEVEL OILER PREFERENCE
○ PRESSURE LUBE SYS ○ API-610 ○ API-614
○ OIL VISC. ISO GRADE

58 **REMARKS:** (1) N/A
59 (2) Suction piping to pump is 4" dia.; discharge piping connection from pump is 1 1/2" dia. with 1 1/2" to 2" reducer
60 (3) Based on materials information and slurry velocity within the pump, Supplier shall recommend materials of construction to
61 prevent corrosion and erosion of the pump wetted parts.
62 (4) Data Sheets shall be completed by Supplier

EQUIPMENT DATA SHEET - CENTRIFUGAL PUMPS

REV

3 APPLICABLE TO: ○ STUDY ○ INQUIRY ● PURCHASE ○ AS-BUILT TAG NO. P-SRC-231
4 CLIENT CH2M WG Idaho LLC LOCATION Idaho National Laboratory
5 FACILITY ICP Integrated Waste Treatment Unit SERVICE WASTE FEED PUMP
6 NO. REQ 1 + spare PUMP SIZE ■ 2 x 4 - 11 A TYPE ■ Horiz. Centrifugal NO. STAGES ONE

8 **BEARINGS AND LUBRICATION (CONT)**
9 ☒ OIL HEATER REQ'D ○ ELECTRIC ○ STEAM
10 ○ OIL PRESS TO BE GREATER THAN COOLANT PRESS
11 **REMARKS** Bearings shall be designed to last a minimum of 5 years.
12 Oil Level sight glass to be provided
13

15 **MECHANICAL SEAL OR PACKING**
16 SEAL DATA: Note (1) below
17 ○ API-682 SEAL
18 ○ NON-API 682 SEAL
19 ○ APPENDIX H SEAL CODE
20 ☒ SEAL MANUFACTURER John Crane
21 ☒ SIZE AND TYPE / Cartridge - Pressurized Dual
22 ☒ MANUFACTURER CODE 3648-2 X P147 1 X D81 H/ X P147 1 X D81 H
23 SEAL CHAMBER DATA: 586/548;X058X058H316/HC/XF481X058H316/HC
24 ☒ TEMPERATURE (°F)
25 ☒ PRESSURE (PSIG)
26 ☒ FLOW (GPM)
27 ☐ SEAL CHAMBER SIZE
28 ☐ TOTAL LENGTH (IN) ☐ CLEAR LENGTH (IN)
29 **SEAL CONSTRUCTION:**
30 ■ SLEEVE MATERIAL 304L or 316L or Alloy
31 ■ GLAND MATERIAL 304L or 316L or Alloy
32 ○ AUX SEAL DEVICE
33 ☒ JACKET REQUIRED
34 **GLAND TAPS:**
35 ■ FLUSH (F) ■ DRAIN (D) ☒ BARRIER/BUFF. (B)
36 ☒ QUENCH (Q) ☒ COOLING (C) ☒ LUBRICATION (G)
37 ☒ HEATING (H) ☒ LEAKAGE ☒ PUMPED FLUID (P)
38 ☒ BAL'NCE FLUID (E) ☒ EXTERNAL FLUID INJECTION (X)
39 **SEAL FLUIDS REQUIREM'T AND AVAILABLE FLUSH LIQUID:**
40 NOTE: IF FLUSH LIQUID IS PUMPAGE LIQUID (AS IN API-610 FLUSH
41 PIPING PLANS 11 TO 41), FOLLOWING FLUSH LIQUID DATA IS NOT REQ'D.
42 ● SUPPLY TEMPERATURE MAX/MIN 125 / 60 (°F)
43 ○ RELATIVE DENSITY (SPECIFIC GRAVITY) 1.0 @ 70 (°F)
45 ○ NAME OF FLUID treated water
46 ○ SPECIFIC HEAT, Cp 1 (BTU/LB °F)
47 ○ VAPOR PRESSURE (PSIA) @ (°F)
48 ○ HAZARDOUS ○ FLAMMABLE ○ OTHER
49 ☐ FLOW RATE MAX/MIN / (GPM)
50 ☐ PRESSURE REQUIRED MAX/MIN / (PSIG)
51 ☐ TEMPERATURE REQUIRED MAX/MIN / (°F)
52 **BARRIER/BUFFER FLUID:**
53 ○ SUPPLY TEMPERATURE MAX/MIN see above / (°F)
54 ○ RELATIVE DENSITY (SPECIFIC GRAVITY) @ (°F)
55 ○ NAME OF FLUID treated water

MECHANICAL SEAL OR PACKING (CONT)
○ VAPOR PRESSURE (PSIA) @ (°F)
● HAZARDOUS ○ FLAMMABLE ○ OTHER
☐ FLOW RATE MAX/MIN / (GPM)
☐ PRESSURE REQUIRED MAX/MI / (PSIG)
☒ TEMPERATURE REQUIRED MAX/MIN / (°F)

QUENCH FLUID:
○ NAME OF FLUID treated water
☐ FLOW RATE (GPM)

SEAL FLUSH PIPING: (See referenced P&ID No. 632760)
■ SEAL FLUSH PIPING PLAN API 610 Plan 53A
■ TUBING ☒ CARBON STEEL
☒ PIPE ■ STAINLESS STEEL
○ AUXILIARY FLUSH PLAN
☒ TUBING ☒ CARBON STEEL
☒ PIPE ☒ STAINLESS STEEL
○ PIPING ASSEMBLY:
☒ THREADED ☒ UNIONS ■ BUTTWELDED
☒ FLANGED ☒ TUBE TYPE FITTINGS
☒ PRESSURE SWITCH TYPE
○ PRESSURE GAUGE
☒ LEVEL SWITCH TYPE
○ LEVEL GAUGE ● RESERVOIR Mounted
○ TEMP INDICATOR ● VENT TANK Shipped Loose
○ HEAT EXCHANGER ● VENT VALVE On vent tank
REMARKS 1. Seal water tubing to be socket welded
2. Seal water components to be bedplate mounted except vent tank.
3. Connection for 1/2" Sch. 40S 304 SS socket welded pipe req'd.

PACKING DATA: (APPENDIX C) N/A
MANUFACTURER
TYPE
SIZE NO. OF RINGS
☐ PACKING INJECTION REQUIRE
☐ FLOW (GPM) @ (°F)
☐ LANTERN RING

STEAM AND COOLING WATER PIPING
☒ COOLING WATER PIPING PLAN N/A
☐ COOLING WATER REQUIREMENTS
SEAL JACKET/BRG HSG (GPM) @ (PSIG)
SEAL HEAT EXCHANGER (GPM) @ (PSIG)
QUENCH (GPM) @ (PSIG)
TOTAL COOLING WATER (GPM)
○ STEAM PIPING: ○ TUBING ○ PIPE
REMARKS

57 **ADDITIONAL REMARKS:** 1.Vendor to specify a double (tandem) seal configuration and material selection compatible with
58 process service requirements and referenced API standards.
59
60
61

ISSUE	DATE	SHEET	PROJECT / REQ'N
6	3/3/2009	4 OF 10	25051

EQUIPMENT DATA SHEET - CENTRIFUGAL PUMPS

REV

3 APPLICABLE TO: ○ STUDY ○ INQUIRY ● PURCHASE ○ AS-BUILT TAG NO. P-SRC-231

4 CLIENT CH2M WG Idaho LLC LOCATION Idaho National Laboratory

5 FACILITY ICP Integrated Waste Treatment Unit SERVICE WASTE FEED PUMP

6 NO. REQ 1 + spare PUMP SIZE ■ 2 x 4 - 11 A TYPE ■ Horiz. Centrifugal NO. STAGES ONE

INSTRUMENTATION

VIBRATION:

○ NONCONTACTING (API 670) ○ TRANSDUCER

● PROVISION FOR MOUNTING ONLY

● FLAT SURFACE REQ'D

○ SEE ATTACHED API 670 DATA SHEET

○ MONITORS AND CABLES

REMARKS

TEMPERATURE AND PRESSURE:

○ RADIAL BRG METAL TEMP ○ THRUST BRG METAL TEMP

○ PROVISION FOR INSTRUMENTS ONLY

○ SEE ATTACHED API-670 DATA SHEET

○ TEMP GAUGES (WITH THERMOWELLS)

OTHER

○ PRESSURE GAUGE TYPE

LOCATION

REMARKS

SPARE PARTS

● START-UP ● NORMAL MAINTENANCE

● SPECIFY Five (5) YEARS OPERATING - QUOTE SEPARATE

PRICING FOR SPARE PARTS

MOTOR DRIVE - SEE MOTOR DATA SHEET ALSO

○ MANUFACTURER Pump Mfg's Choice - Reliance Preferred

■ 15 (HP) ☐ 1750 (RPM)

● HORIZONTAL ○ VERTICAL

☐ FRAME 254T

● SERVICE FACTOR 1.15

● VOLTS/PHASE/HERTZ 460 / 3 / 60

● TYPE INVERTER DUTY

● ENCLOSURE TEFC - XT

○ MINIMUM STARTING VOLTAGE

● TEMPERATURE RISE 80 (OC)

○ FULL LOAD AMPS

○ LOCKED ROTOR AMPS

● INSULATION Class F with Class B Temp. Rise

■ STARTING METHOD Loaded

● LUBE Grease per Note 10, pg 3

☐ VERTICAL THRUST CAPACITY

UP (LBS) DOWN (LBS)

BEARINGS (TYPE / NUMBER):

☐ RADIAL /

☐ THRUST /

RELIABILITY

● PUMP RELIABILITY %

● MOTOR RELIABILITY %

● COUPLING RELIABILITY %

● OVERALL PUMP/MOTOR RELIABILITY %

MOTOR DRIVE (CONT)

REMARKS REFER TO EQUIP. DATA SHEETS, PG 8 AND 9

MOTOR. MOTOR BEARINGS ARE INACCESSIBLE FOR LIFE OF PUMP

OPERATION. MOTOR BEARINGS SHALL BE PERMANENTLY LUBED.

SURFACE PREPARATION AND PAINT

● MANUFACTURER'S STANDARD FOR THE INTENDED SERVICE

OTHER .

PUMP: N/A PUMP IS STAINLESS STEEL

○ PUMP SURFACE PREPARATION

○ PRIMER

○ FINISH COAT

BASEPLATE: N/A BASEPLATE IS STAINLESS STEEL

○ BASEPLATE SURFACE PREPARATION

○ PRIMER

○ FINISH COAT

SHIPMENT:

● DOMESTIC ○ EXPORT ○ EXPORT BOXING REQUIRED

○ OUTDOOR STORAGE MORE THAN 6 MONTHS

SPARE ROTOR ASSEMBLY PACKAGED FOR:

○ HORIZONTAL STORAGE ○ VERTICAL STORAGE

○ TYPE OF SHIPPING PREPARATION

REMARKS

WEIGHTS - ADVISE

MOTOR DRIVEN:

WEIGHT OF PUMP (LBS)

WEIGHT OF BASEPLATE (LBS)

WEIGHT OF MOTOR (LBS)

WEIGHT OF GEAR (LBS)

TOTAL WEIGHT (LBS)

TURBINE DRIVEN: (N/A)

WEIGHT OF BASEPLATE (LBS)

WEIGHT OF TURBINE (LBS)

WEIGHT OF GEAR (LBS)

TOTAL WEIGHT (LBS)

REMARKS SELLER TO FILL IN ALL APPLICABLE BLANK ITEMS.

OTHER PURCHASE REQUIREMENTS

● COORDINATION MEETING REQUIRED

● REVIEW FOUNDATION DRAWINGS

○ REVIEW PIPING DRAWINGS

○ OBSERVE PIPING CHECKS

● OBSERVE INITIAL ALIGNMENT CHECK

○ CHECK ALIGNMENT AT OPERATING TEMPERATURE

● CONNECTION DESIGN APPROVAL

REMARKS:

ISSUE	DATE	SHEET	PROJECT / REQ'N
6	3/3/2009	5 OF 10	25051

EQUIPMENT DATA SHEET - CENTRIFUGAL PUMPS

REV

3 APPLICABLE TO: ○ STUDY ○ INQUIRY ● PURCHASE ○ AS-BUILT TAG NO. P-SRC-231

4 CLIENT CH2M WG Idaho LLC LOCATION Idaho National Laboratory

5 FACILITY ICP Integrated Waste Treatment Unit SERVICE WASTE FEED PUMP

6 NO. REQ 1 + spare PUMP SIZE ■ 2 x 4 - 11 A TYPE ■ Horiz. Centrifugal NO. STAGES ONE

7 **OTHER PURCHASER REQUIREMENTS (CONT)**

8 ● RIGGING DEVICE REQ'D FOR TYPE OH2 PUMP
9 ○ HYDRODYNAMIC THRUST BRG SIZE REVIEW REQ'D
10 ○ LATERAL ANALYSIS REQUIRED
11 ● ROTOR DYNAMIC BALANCE
12 ■ MOUNT SEAL RESERVOIR & CIRCULATION PIPING ON BASEPLATE
13 ○ INSTALLATION LIST IN PROPOSAL
14 ○
15 ○ TORSIONAL ANALYSIS/REPORT
16 ● PROGRESS REPORTS REQUIRED
17 ■ MEAN TIME BETWEEN FAILURES (HRS)
18 ■ MEAN TIME TO FAILURE (HRS)
19 ■ AVAILABILITY (%) (98% MIN REQD)

21 **QA INSPECTION AND TEST**

22 ● REVIEW VENDOR'S QA PROGRAM
24 ● PERFORMANCE CURVE APPROVAL
25 ● SHOP INSPECTION
26 ○ TEST WITH SUBSTITUTE SEAL

27 TEST	NON-WIT	WIT	OBSERVE
28 HYDROSTATIC (SEE REMARK 2)	●	○	○
29 PERFORMANCE	●	○	○
30 NPSH (SEE REMARK 1)	●	○	○
31 COMPLETE UNIT TEST	●	○	○
32 SOUND LEVEL TEST	○	○	○
33 ● CLEANLINESS PRIOR TO 34 FINAL ASSEMBLY	●	○	○
35 ○ NOZZLE LOAD TEST	○	○	○
36 ○ BRG HSG RESONANCE TEST	○	○	○
37 ● 4 POINT NPSHR TEST	●	○	○
38 ○ REMOVE/INSPECT 39 HYDRODYNAMIC BEARINGS 40 AFTER TEST	○	○	○
41 ○ AUXILIARY EQUIPMENT 42 TEST	○	○	○
43 ○	○	○	○
44 ○	○	○	○

45 ● MATERIAL CERTIFICATION REQUIRED
46 ● CASING ● IMPELLER ● SHAFT
47 ● OTHER COVER, BEARING FRAME, SEAL GLAND
48 ○ CASTING REPAIR PROCEDURE APPROVAL REQ'D
49 ● INSPECTION REQUIRED FOR CONNECTION WELDS
50 ○ MAG PARTICLE ● LIQUID PENETRANT
51 ○ RADIOGRAPHIC ○ ULTRASONIC
52 ○ INSPECTION REQUIRED FOR CASTINGS
53 ○ MAG PARTICLE ○ LIQUID PENETRANT
54 ○ RADIOGRAPHIC ○ ULTRASONIC

QA INSPECTION AND TEST (CONT'D)

○ ADDITIONAL INSPECTION REQUIRED FOR:
○ MAG PARTICLE ○ LIQUID PENETRANT
○ RADIOGRAPHIC ○ ULTRASONIC
○ ALTERNATE ACCEPTANCE CRITERIA
○ HARDNESS TEST REQUIRED FOR:
○ WETTING AGENT HYDROTEST
● VENDOR SUBMIT TEST PROCEDURES
○ RECORD FINAL ASSEMBLY RUNNING CLEARANCES
○ INSPECTION CHECK-LIST TO INCLUDE API - 610 INSPECTION CHECKLIST

REMARKS

GENERAL REMARKS

REMARK 1: N/A

REMARK 2: HYDRO TEST TO BE HELD FOR A MINIMUM DURATION OF 30 MINUTES AT 1.5 TIMES MAXIMUM ALLOWABLE WORKING PRESSURE OF THE PUMP CASING.

REMARK 3: N/A

REMARK 4: N/A

REMARK 5 N/A

REMARK 6: N/A

56 **ADDITIONAL REMARKS:**

ISSUE	DATE	SHEET	PROJECT / REQ'N
6	3/3/2009	6 OF 10	25051

EQUIPMENT DATA SHEET - CENTRIFUGAL PUMPS

REV

APPLICABLE TO:	○ STUDY	○ INQUIRY	● PURCHASE	○ AS-BUILT	TAG NO.	P-SRC-231
CLIENT	CH2M WG Idaho LLC		LOCATION	Idaho National Laboratory		
FACILITY	ICP Integrated Waste Treatment Unit		SERVICE	WASTE FEED PUMP		
NO. REQ	1 + spare	PUMP SIZE ■ 2 x 4 - 11 A	TYPE ■	Horiz. Centrifugal	NO. STAGES	ONE

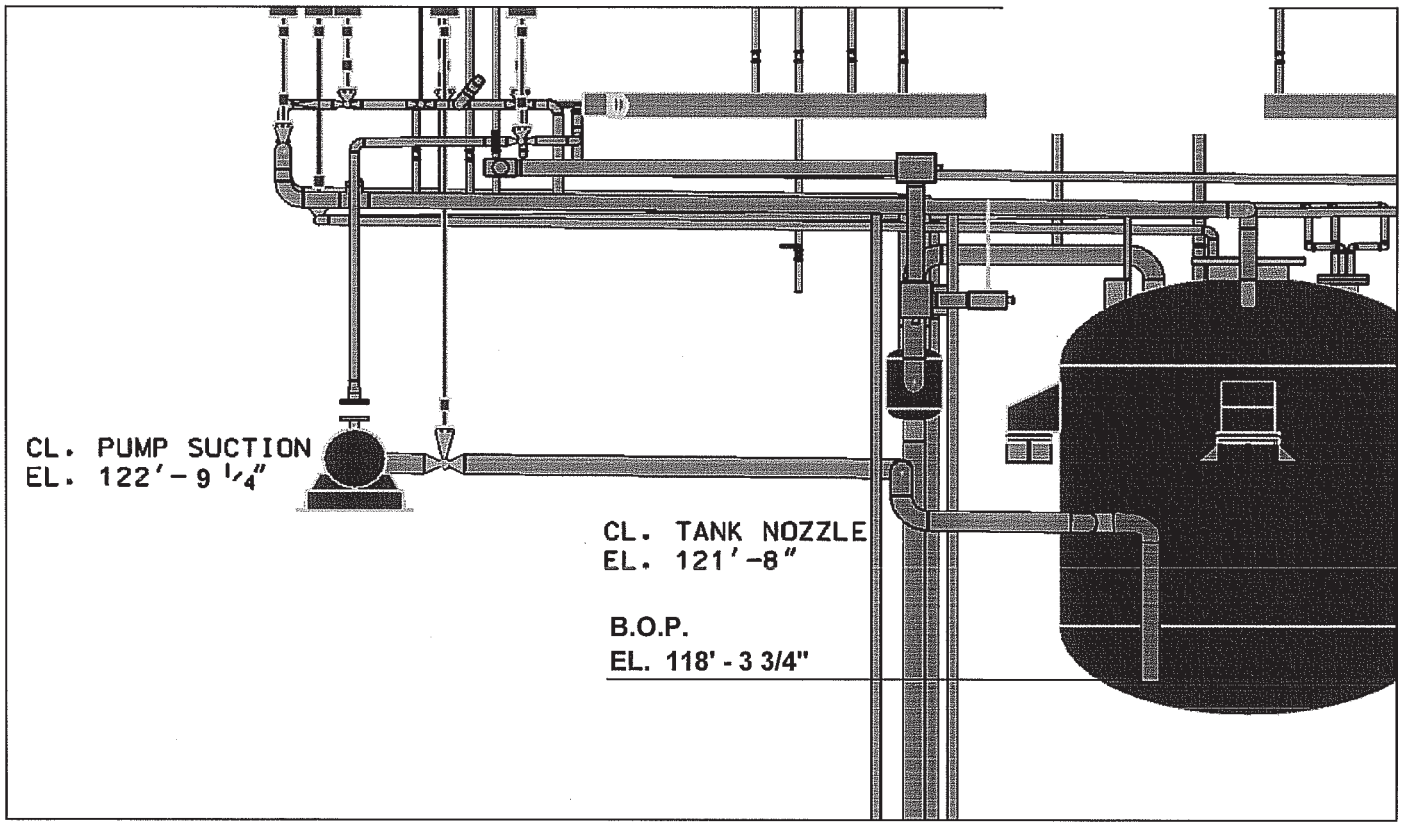

ELEVATION OF PUMP, TANK AND PIPING

ISSUE	DATE	SHEET	PROJECT / REQ'N
6	3/3/2009	7 OF 10	25051

REV

EQUIPMENT DATA SHEET - NEMA FRAME INDUCTION MOTOR

REV

3 APPLICABLE TO: ○ STUDY ○ INQUIRY ● PURCHASE ○ AS BUILT

4 CLIENT: CH2M WG Idaho LLC — ITEM No. P-SRC-231 — NO. REQ'D: 2

5 FACILITY: ICP Integrated Waste Treatment Unit — SERVICE Waste Feed Pump Driver

6 LOCATION: Idaho National Laboratory - Scoville, ID — MFR/MODEL: ■ PUMP MFG'S CHOICE — SERIAL NO.

CONDITIONS OF SERVICE AND CONSTRUCTION FEATURES

10 NAMEPLATE HP: 15 — EFFICIENCY: ● HIGH ○ STANDARD — SYNCH SPEED: 1800 RPM

11

12 460 VOLTS 3 Ø 60 HZ — NEMA DSGN B

13 SERVICE FACTOR ○ 1.0 ● 1.15 — TEMP RISE: Class B 80°C

14 ○ ○

15 **MULTISPEED** — NOT APPLICABLE

16 ○ SINGLE WINDING ○ TWO WINDING

17 ○ VARIABLE TORQUE ○ CONSTANT HORSEPOWER

18 ○ CONSTANT TORQUE ● INVERTER DUTY **(NOTE 3)**

19 LOCATION: ALTITUDE 4913.5 FT DESIGN AMB 52 (Note 9) °C

20 SEISMIC ZONE :

21 NEC AREA CLASSIFICATION : CL GRP DIV

22 AUTO IGNITION TEMP : °C | OPERATING ATM.: Indoor

23 **ENCLOSURE :** ○ OPEN-DRIP PROOF

24 ○ WEATHER PROTECTED (I) (II) ● TEFC - XT ○ TENV

25 ○ FORCE VENTILATED ● SEVERE DUTY

26 ○ DUST-IGNITION PROOF ○ TEAAC

27 ○ EXPLOSION-PROOF WITH "T" CODE MARKING

28 **STARTING CONDITIONS**

29 ● LOADED ○ UNLOADED

30 ● FULL VOLTAGE ○ REDUCED VOLTAGE/SOFT START

31 MINIMUM STARTING VOLTAGE AS % OF RATED %

32 **INSULATION :** CLASS F WITH 80°C TEMP. RISE

33 TYPE : ● MFR. STD ○ ENCAPSULATED ○ VPI

34 **ROTATION FACING NON-DRIVE END :**

35 ○ CLOCKWISE ○ COUNTERCLOCKWISE ○

36 **BEARINGS** ● ANTI-FRICTION ○ SPLIT SLEEVE

37 Note 10 sht 2 ● GREASE LUBE ○ OIL LUBE

38 **MOUNTING** ● HORIZONTAL ○ VERTICAL SOLID SHAFT

39 ○ VERTICAL HOLLOW SHAFT

40 **DRIVE SYSTEM** ● DIRECT COUPLED ○ GEAR UNIT

41 ○ V-BELTS ○ CHAIN

42 ● HALF COUPLING PRESSED ON BY DRIVEN EQUIPMENT SELLER

43 ○ SHEAVE PRESSED ON BY DRIVEN EQUIPMENT SELLER

44 **ACCESSORY EQUIPMENT**

45 ● BASEPLATE FURNISHED BY : **PUMP SUPPLIER**

46 ● COUPLING FURNISHED BY : **PUMP SUPPLIER**

47 ○ SPACE HEATER : N/A VOLTS PHASE

48 ○ AIR FILTERS ○ GUARD SCREENS

49 ○ STATOR WINDING TEMPERATURE DETECTORS

50 ○ 100 OHM PLAT RTD, 2 PER PHASE, WIRED TO J-BOX

51 ○ THERMOSTAT, 1 PER PHASE, WIRED TO JUNCTION BOX

52 ○ DRAIN / BREATHER :

53 ○ CTs FOR DIFFERENTIAL PROTECTION

54 ○ BEARING TEMPERATURE DETECTORS

55 ○ 100 OHM PLAT RTD, 1 PER BEARING, WIRED TO J-BOX

56 ○ THERMOSTAT, 1 PER BEARING, WIRED TO JUNCTION BOX

57 ○ BEARING OIL SUMP HEATERS

58 ○ BEARING VIBRATION DETECTORS ○ ACCELERATION PAD ONLY

59 ○ SURGE CAPACITOR MTD. IN TERMINAL BOX

60 ○ VFD BY PUMP SELLER

61 **TERMINAL BOX:** ● ENCLOSURE: NEMA 4X

62 ○ SIZED FOR MOTOR LEADS ONLY

63 ● OVERSIZED FOR MOTOR LEADS (LARGER THAN NEMA STD)

64 ● GROUNDING LUG MOUNTED INSIDE SIZE: #8 Cu AWG

65 ○ SEPARATE AUXILIARY TERMINAL BOX

66 ○ SEPARATE EXTERNAL GROUND PAD OR STUD (50 HP & ABOVE)

67

68

DATA SUPPLIED BY MOTOR MANUFACTURER OR BIDDER

FRAME No.: MTR TEMP RISE : °C OVER °C AMB.

LOAD	1/2	3/4	FL	SF
EFFICIENCY (%)				
CURRENT (AMPS)				
POWER FACTOR (%)				
kW LOSSES				

LOCKED ROTOR TORQUE: % OF FULL LOAD

BREAKDOWN TORQUE: % OF FULL LOAD

PULL-UP TORQUE: % OF FULL LOAD

FULL LOAD TORQUE: # - FT

LOCKED ROTOR CURRENT: AMP

LOCKED ROTOR KVA CODE LETTER:

LOCKED RTR WITHSTAND TIME: SEC (COLD) SEC (HOT)

SUCCESSIVE STARTING LIMITATIONS: PER HOUR

FULL LOAD SPEED: RPM

FAN ROTATION: ☐ UNI-DIRECTIONAL ☐ REVERSIBLE

LOAD WK^2 : $FT\text{-}LB^2$

ROTOR WK^2 : $FT\text{-}LB^2$

LOAD CAPABILITY WK^2 : $FT\text{-}LB^2$

SPACE HEATER POWER: WATTS

MOTOR NET WEIGHT: LBS

MAX ERECTION WEIGHT: LBS

MAX OVERALL L: W: H:

ADDITIONAL SPECIFICATION REQUIREMENTS OR REMARKS:

1) MOTOR SUPPLIER TO FILL IN ALL BLANK ITEMS, MARK (N/A) IF NOT APPLICABLE, AND SUBMIT COMPLETED DATA SHEET FOR REVIEW.
2) N/A
3) MOTOR WILL BE OPERATED FROM VARIABLE FREQUENCY DRIVE (VFD) AND SHALL BE RATED FOR INVERTER DUTY PER NEMA MG-1 PART 31. MOTOR SHALL BE RATED TO OPERATE CONTINUOUSLY UNDER LOAD AT ALL SPECIFIED SPEEDS.
4) N/A
5) ACCEPTABLE MOTOR MANUFACTURERS ARE AS FOLLOWS:
TECO/WESTINGHOUSE
TOSHIBA
GENERAL ELECTRIC
SIEMENS
RELIANCE
6) QUALITY LEVEL REQUIREMENTS:
SEE PROCUREMENT DOCUMENTS FOR REQUIREMENTS
7) MOTOR SHALL BE INSTALLED IN AN ENCLOSED AREA INACCESSIBLE FOR NORMAL MAINTENANCE. MOTOR BEARINGS SHALL BE SEALED AND LUBRICATED FOR LIFE.
8) N/A
9) TEMPERATURE IRANGE NSIDE ENCLOSURE 52º-130ºF.
10) N/A
11) ONE INSTALLED PUMP/MOTOR AND ONE UNINSTALLED SPARE PUMP/MOTOR.
12) Motor to be NRTL listed and/or labelled
13) N/A
14) N/A

ISSUE	DATE	SHEET	PROJECT # / REQ'N
6	3/3/2009	8 OF 10	25051

REV

EQUIPMENT DATA SHEET - NEMA FRAME INDUCTION MOTOR

REV

APPLICABLE TO: ○ STUDY ○ INQUIRY ● PURCHASE ○ AS BUILT

CLIENT: CH2M WG Idaho LLC | ITEM No. P-SRC-231 | NO. REQ'D: 2

FACILITY: ICP Integrated Waste Treatment Unit | SERVICE: Waste feed Pump Driver

LOCATION: Idaho National Laboratory - Scoville, ID | MFR/MODEL: | SERIAL NO.

CRITICAL CHARACTERISTICS QUALITY LEVEL REQUIREMENTS		ACCEPTANCE METHODS SUPPLIED BY MOTOR MANUFACTURER OR BIDDER
MANUFACTURER'S TYPE AND FRAME DESIGNATION	●	THE CRITICAL CHARACTERISTICS DATA ARE AVAILABLE IN EXISTING DOCUMENTS SUCH AS THE DATA SHEETS.
HORSEPOWER OUTPUT	●	
TIME RATING	○	
MAXIMUM AMBIENT TEMPERATURE, DESIGNED	○	
TEMPERATURE RISE	○	
INSULATION SYSTEM	○	
RPM AT RATED LOAD	○	
FREQUENCY	○	ACCEPTANCE OF CRITICAL CHARACTERISTICS SHALL BE VERIFIED AND DOCUMENTED BY EQUIPMENT RECEIPT INSPECTION PERFORMED BY BUYER OR BUYER'S REPRESENTATIVE.
NUMBER OF PHASES	○	
RATED LOAD AMPERES	○	
VOLTAGE	○	
LOCKED ROTER AMPERES	○	
DESIGN LETER FOR MOTOR	○	
EFFICIENCY	○	
SERVICE FACTOR	○	
ENCLOSURE TYPE	○	
OTHER	○	

ISSUE	DATE	SHEET	PROJECT # / REQUISITION #
6	3/3/2009	9 OF 10	25051

REV

EQUIPMENT DATA SHEET - LUBRICATION SCHEDULE

REV

APPLICABLE TO: ○ STUDY ○ INQUIRY ● PURCHASE ○ AS-BUILT

Client: CH2M WG Idaho LLC | Tag No.: P-SRC-231

Facility: Integrated Waste Treatment Unit | Service: WASTE FEED PUMP AND DRIVER

Location: Idaho National Laboratory | No. Req'd: 2

LUBRICATION REQUIREMENTS

EQUIPMENT TYPES **CENTRIFUGAL PUMP** NO. OF UNITS **2**

PARTS REQUIRING LUBRICATION **RADIAL AND THRUST BALL BEARINGS**

LUBRICANT TYPE (OIL/GREASE) **OIL SUPPLIED BY FIELD OPERATIONS THAT MEETS MFG. REQUIREMENTS**

LUBE SPECIFICATION

RECOMMENDED VISCOSITY (SUMMER) ____ SSU ____ °F (WINTER) ____ SSU ____ °F

INITIAL FILL CAPACITY ____ EST. ANNUAL FILL CAPACITY ____

PERIODIC REQUIREMENT ____ FREQUENCY ____

LUBRICANT TRADE NAMES

EQUIPMENT TYPES **ELECTRIC MOTOR** NO. OF UNITS **2**

PARTS REQUIRING LUBRICATION **ANTI-FRICTION BEARINGS - SEALED BEARINGS**

LUBRICANT TYPE (OIL/GREASE) **GREASE**

LUBE SPECIFICATION

RECOMMENDED VISCOSITY (SUMMER) ____ SSU ____ °F (WINTER) ____ SSU ____ °F

INITIAL FILL CAPACITY ____ EST. ANNUAL FILL CAPACITY ____

PERIODIC REQUIREMENT ____ FREQUENCY ____

LUBRICANT TRADE NAMES **EXXON UNIREX OR CHEVRON SRI-2**

EQUIPMENT TYPES ____ NO. OF UNITS ____

PARTS REQUIRING LUBRICATION

LUBRICANT TYPE (OIL/GREASE)

LUBE SPECIFICATION

RECOMMENDED VISCOSITY (SUMMER) ____ SSU ____ °F (WINTER) ____ SSU ____ °F

INITIAL FILL CAPACITY ____ EST. ANNUAL FILL CAPACITY ____

PERIODIC REQUIREMENT ____ FREQUENCY ____

LUBRICANT TRADE NAMES

EQUIPMENT TYPES ____ NO. OF UNITS ____

PARTS REQUIRING LUBRICATION

LUBRICANT TYPE (OIL/GREASE)

LUBE SPECIFICATION

RECOMMENDED VISCOSITY (SUMMER) ____ SSU ____ °F (WINTER) ____ SSU ____ °F

INITIAL FILL CAPACITY ____ EST. ANNUAL FILL CAPACITY ____

PERIODIC REQUIREMENT ____ FREQUENCY ____

LUBRICANT TRADE NAMES

NOTES:

APPENDIX D-2

Sintered Metal Filter Specifications

APPENDIX D-3

IWTU GAC Bed Adsorbers Breakthrough Calculations

Thor Treatment Technologies / Washington Group International	Mercury Adsorbers GAC Bed Breakthrough Calc. 28276-21-089	**Project No.:** 28276

DESIGN DOCUMENT COVER SHEET

Project Name: IWTU **Document #:** 28276-21-089

Client: CWI

Latest Revision: 1

Revision Signatures

Mary Pong	5·1·08	John Tressell	5·2·08
Prepared by	Date	Approved by QA	Issue Date
Sarah Morrow	5/1/08	N. D. Amawia	5-2-08.
Reviewed/Checked by	Date	Approved by Engineering Manager	Date

Safety Significant

Yes ☒ No ☐

Quality Level QL1 ☐ QL2 ☒ QL3 ☐ QL4 ☐

Status	Rev. No.	Date	Prepared By	Pages	Description of Changes
Final	0	1/17/07	N. Kendl	7	Issue for design freeze
Final	1	5/1/08	M. Pong mp	7	Increased bed height and gas flowrate per cost reduction. Reduced mercury flowrate per latest mass balance.

THOR Treatment Technologies	Calculation Set No. 28276-21-089		Rev No. 1
Calculation Summary & Control Sheet	Prelim	Final X	Void

Project:	ICP – Integrated Waste Treatment Unit	Sheet 1 of 3	
Discipline:	Process	Project No:	28276
Structure or System	Process Off-gas	Quality Classification:	2
Subject:	Mercury Adsorbers GAC Bed Breakthrough		

Completed by:	Max Pong Max Pong	Date	5/1/08
Checked by:	Sarah Morroni Sarah Morroni	Date	5/1/08
Approved by (LDE or Department Manager)	Rich Henkel	Date	5/2/08

Distribution: Lead Process Engineer

Affected Documents:

Reason for Revision:
Increased bed height and gas flowrate per cost reduction. Reduced mercury flowrate per latest mass balance.

Total number of sheets in this issue: 7

Sheets revised, added or deleted: Sheets 1-3, Att. 1

Problem Statement:
Determine when the mercury adsorber primary GAC bed will be depleted.

Summary Conclusions:
Based on the HF-1250 Case Material and Energy Balance Rev. 4, with an average SBW feedrate of 2.5 gpm, the mercury adsorber primary bed will breakthrough in 168 days of continuous operation. The mercury adsorber will be loaded at a slower rate if the process is operating at less than the average flowrate.

Thor Treatment Technologies	Calculation Set No. 28276-21-089		Rev No. 1
Calculation Summary & Control Sheet	Prelim	Final X	Void

Project:	ICP – Integrated Waste Treatment Unit	Sheet 2 of 3	
Discipline:	Process	Project No:	28276
Structure or System	Process Off-gas	Quality Classification:	2
Subject:	Mercury Adsorbers GAC Bed Breakthrough		

Design Basis:

1. Mercury concentration in the SBW feed is the average concentration from the SBW tank farm feed tanks (WM-187, WM-188, and WM-189), 4.261 x 10^{-3} gmole/liter (Ref. 1, sheet SBW Feed).
2. Quantity of SBW to be treated in the IWTU (944,097 gallons) includes estimates for rinse water. (Ref. 1, sheet SBW Feed)
3. Mercury in off-gas (485.3 g/hr = 1.070 lb/hr) based on the on the HF-1250 stream summary for stream 98 (Ref. 1).
4. Mercury adsorber bed size (12 ft dia x 7.5 ft high) based on Rev. 3 of the Mercury Adsorbers conditions of service data sheet. (Ref. 2).
5. An average throughput of 2.5 gpm of SBW feed is used in the calculation (Ref. 1).
6. Mersorb (3 mm) or typical to be used for granular activated carbon (GAC) bed. Density information from the Mersorb product data sheet is used in the calculation (Ref. 4).
7. Adsorption capacity of the GAC is >20 g Hg / 100 g Mersorb based on vendor information (Ref. 3). Mercury capacity before breakthrough is conservatively estimated at 15 g Hg per 100 g of Mersorb (GAC) based on Hazen testing per B. Mason.
8. Depletion of the GAC bed due to high temperature is assumed negligible.

Unverified assumptions/Open items:

None

References: (Specifications, Drawings, codes, calculations, texts, reports, computer data design input documents, etc.)

1. CWI calculation 28276-21-001 Rev. 4, Mass and Energy Balance.
2. Mercury Adsorbers Conditions of Service, COS-F-SRH-141-A/B, Rev. 3.
3. Nucon International, Inc. vendor information, NUCON Bulletin 11B28, August 2004.
4. Mersorb product data information (Attachment 2, 2 pages).
5. Calculation 28276-21-005 Rev. 2, Process Exhaust Blowers

Computer Program Disclosure Information: N/A

Program Used: (name)	Rev. No.	Rev. Date	Program Type	TTT Verified Yes No
None				

Analysis description:	Run No.	Result:

The attached computer output has been reviewed, the input data checked, and the results approved for release.

Input criteria by:	Date:	Checked by:	Date:
Run by:	Date:	Approved by:	Date:

THOR Treatment Technologies **General Computation Sheet**	Calculation Set No. 28276-21-089	Rev No. 1	Comp. by MP 5.1.08 Date	Chk'd by Smm 5/1/08 Date
	Prelim / Final x			
Project: **Integrated Waste Treatment Unit**	Sheet __3__ of __3___			
Subject: Mercury Adsorbers GAC Bed Breakthrough	Project No. 28276			

Mercury Present in the SBW (Ref. 1, sheet SBW Feed)
See Attachment 1 for composition of SBW
Total SBW = 944,097 gal
Mercury concentration = .004261 gmoles/liter
Mercury molecular wt = 200.6 grams/liter

944,097 gal x 3.785 liter/gal x .004261 gmoles/liter x 200.6 g/gmole x lb/453.6 g = 6734 lb Hg

From the MEB (Ref. 1) stream 98
Average mercury flowrate = 485.3 g/hr x lb/453.6 g = 1.070 lb/hr Hg

Process Off-gas Conditions (Ref. 5)
Pressure = 11.37 psia
Temperature = 145°C, 170°C max.
Off-Gas Flow = 5596 acfm for HF-1250 case
Design Off-Gas Flow = (5596 * 1.25) = 7108 acfm

Granular Activated Carbon (GAC) Specifications
Mercury Adsorber Vessel Diameter = 12 ft (Ref. 2)
Mercury Adsorber Vessel Height (approx.) = 15.5 ft (Ref. 2)
GAC Bed depth = 7.5 ft (Ref. 2)
GAC cross sectional area = (pi * (12 ft /2)^2) = 113 ft^2
GAC bed volume = 113 ft^2 x 7.5 ft = 848.25 ft^3
Density of GAC bed = 34 lb/ ft^3 (Ref. 4, 3 mm Mersorb pellets)
GAC weight each bed = 34 lb/ft^3 * 848.25 ft^3 = 28,840 lb

Mersorb Adsorption Capacity and Bed Change Requirement
Design Condition: 15 g Hg / 100 g Mersorb

Mercury Bed Change: 28,840 lbs Mersorb * 15 wt% = 4326 lbs Hg adsorbed / GAC bed
The SBW process in the IWTU has approximately 6734 lbs Hg ÷ (4326 lb Hg / GAC bed) = 1.56 primary GAC bed replacements required. (This does not include the disposal of the secondary bed upon IWTU conclusion.)

If operating at 2.5 gpm SBW feedrate, Hg vapor average flow rate equals 1.070 lbs/hr. The first GAC bed adsorbs 99.99% of the mercury in the off-gas vapor (1.07 lb/hr *.9999) = 1.0699 lb/hr adsorbed.

At constant operation: 4326 lbs Hg will load the first GAC bed at a rate of 1.0699 lbs/hr, therefore the first bed will need to be changed out every 4043 hours or every 168 days (4326 lbs Hg ÷ 1.0699 lb/hr).

Assume IWTU plant availability 70%, at this plant rate, the primary mercury adsorber GAC breakthrough will occur after approximately 241 days of operation.

Data from sheet SBW Feed (Ref. 1)

		Tank	WM-187	WM-188	WM-189	Jet water	Total
		Gallons	276,463	282454.43	282354	102825.95	944097.38
		sg	1.28E+00	1.31E+00	1.32E+00	1.00E+00	1.27E+00
			mol/l	mol/l	mol/l	mol/l	mol/l
1.01	H+	H+	1.58E+00	3.09E+00	2.66E+00	0.00E+00	2.18E+00
26.98	Al	Al+3	5.43E-01	7.45E-01	6.89E-01	0.00E+00	5.88E-01
243.00	Am	Am+	0.00E+00	0.00E+00	0.00E+00	0.00E+00	0.00E+00
121.76	Sb	Sb+5	5.07E-06	8.62E-06	1.89E-06	0.00E+00	4.63E-06
74.92	As	As+5	3.60E-06	3.91E-06	3.92E-06	0.00E+00	3.40E-06
137.37	Ba	Ba+2	6.21E-05	1.06E-04	5.89E-05	0.00E+00	6.76E-05
9.01	Be	Be+2	8.15E-06	1.74E-05	1.68E-05	0.00E+00	1.26E-05
10.81	B	B+3	9.27E-03	2.10E-02	1.94E-02	0.00E+00	1.48E-02
79.90	Br	Br-	0.00E+00	0.00E+00	0.00E+00	0.00E+00	0.00E+00
112.41	Cd	Cd+2	7.45E-04	3.15E-03	3.58E-03	0.00E+00	2.23E-03
40.08	Ca	Ca+2	4.25E-02	7.29E-02	7.13E-02	0.00E+00	5.56E-02
12.01	C		3.39E-02	3.39E-02	1.22E-02	8.33E-02	3.28E-02
140.12	Ce	Ce+4	0.00E+00	0.00E+00	0.00E+00	0.00E+00	0.00E+00
132.91	Cs	Cs+	1.05E-05	3.90E-05	2.67E-05	0.00E+00	2.27E-05
35.45	Cl	Cl-	2.01E-02	1.69E-02	2.61E-02	0.00E+00	1.88E-02
52.00	Cr	Cr+3	3.19E-03	6.09E-03	5.64E-03	0.00E+00	4.44E-03
58.93	Co	Co+2	0.00E+00	0.00E+00	0.00E+00	0.00E+00	0.00E+00
63.55	Cu	Cu+2	2.38E-09	8.62E-04	9.51E-04	0.00E+00	5.42E-04
	Cm		0.00E+00	0.00E+00	0.00E+00	0.00E+00	0.00E+00
	Dy		0.00E+00	0.00E+00	0.00E+00	0.00E+00	0.00E+00
151.97	Eu	Eu+3	0.00E+00	0.00E+00	0.00E+00	0.00E+00	0.00E+00
19.00	F	F-	3.71E-03	7.63E-03	7.79E-03	0.00E+00	5.70E-03
157.25	Gd	Gd+3	0.00E+00	0.00E+00	0.00E+00	0.00E+00	0.00E+00
72.61	Ge	Ge+4	0.00E+00	0.00E+00	0.00E+00	0.00E+00	0.00E+00
114.82	In	In+3	0.00E+00	0.00E+00	0.00E+00	0.00E+00	0.00E+00
126.90	I	I-	0.00E+00	0.00E+00	0.00E+00	0.00E+00	0.00E+00
55.85	Fe	Fe+3	1.91E-02	2.73E-02	2.67E-02	0.00E+00	2.18E-02
138.91	La	La+3	0.00E+00	0.00E+00	0.00E+00	0.00E+00	0.00E+00
207.20	Pb	Pb+2	1.07E-03	1.12E-03	1.15E-03	0.00E+00	9.92E-04
6.94	Li	Li+	0.00E+00	0.00E+00	0.00E+00	0.00E+00	0.00E+00
24.31	Mg	Mg+2	2.37E-02	2.77E-02	2.21E-02	0.00E+00	2.18E-02
54.94	Mn	Mn+4	1.35E-02	1.67E-02	1.93E-02	0.00E+00	1.47E-02
200.59	Hg	Hg+2	1.65E-03	6.31E-03	6.32E-03	0.00E+00	4.261E-03
95.94	Mo	Mo+6	0.00E+00	0.00E+00	0.00E+00	0.00E+00	0.00E+00
144.24	Nd	Nd+3	0.00E+00	0.00E+00	0.00E+00	0.00E+00	0.00E+00
237.00	Np	Np+4	0.00E+00	0.00E+00	0.00E+00	0.00E+00	0.00E+00
58.69	Ni	Ni+2	2.03E-03	2.88E-03	2.37E-03	0.00E+00	2.16E-03
92.91	Nb	Nb+5	0.00E+00	0.00E+00	0.00E+00	0.00E+00	0.00E+00
62.01	NO3	NO3	5.16E+00	7.55E+00	7.09E+00	0.00E+00	5.89E+00
106.42	Pd	Pd+4	0.00E+00	0.00E+00	0.00E+00	0.00E+00	0.00E+00
94.97	PO4	PO4	7.66E-03	7.47E-04	2.34E-03	0.00E+00	3.17E-03
239.00	Pu	Pu+	0.00E+00	0.00E+00	0.00E+00	0.00E+00	0.00E+00
39.10	K	K+	1.86E-01	2.08E-01	2.40E-01	0.00E+00	1.88E-01
140.91	Pr	Pr+	0.00E+00	0.00E+00	0.00E+00	0.00E+00	0.00E+00
145.00	Pm	Pm+	0.00E+00	0.00E+00	0.00E+00	0.00E+00	0.00E+00
102.91	Rh	Rh+	0.00E+00	0.00E+00	0.00E+00	0.00E+00	0.00E+00

Data from sheet SBW Feed (Ref. 1)

		Tank	WM-187	WM-188	WM-189	Jet water	Total
		Gallons	276,463	282454.43	282354	102825.95	944097.38
		sg	1.28E+00	1.31E+00	1.32E+00	1.00E+00	1.27E+00
			mol/l	mol/l	mol/l	mol/l	mol/l
85.47	Rb	Rb+	0.00E+00	0.00E+00	0.00E+00	0.00E+00	0.00E+00
101.07	Ru	Ru+	0.00E+00	0.00E+00	0.00E+00	0.00E+00	0.00E+00
150.36	Sm	Sm+	0.00E+00	0.00E+00	0.00E+00	0.00E+00	0.00E+00
78.96	Se	Se+	0.00E+00	4.73E-06	9.76E-07	0.00E+00	1.71E-06
28.09	Si	Si+	3.27E-04	4.12E-04	4.03E-04	0.00E+00	3.40E-04
107.87	Ag	Ag+	1.68E-06	4.39E-06	2.89E-06	0.00E+00	2.67E-06
22.99	Na	Na+	1.76E+00	1.74E+00	1.94E+00	0.00E+00	1.62E+00
87.62	Sr	Sr+	0.00E+00	0.00E+00	0.00E+00	0.00E+00	0.00E+00
96.06	SO4	SO4	6.44E-02	5.93E-02	5.95E-02	0.00E+00	5.44E-02
98.91	Tc	Tc+	0.00E+00	0.00E+00	0.00E+00	0.00E+00	0.00E+00
127.60	Te	Te+	0.00E+00	0.00E+00	0.00E+00	0.00E+00	0.00E+00
158.93	Tb	Tb+	0.00E+00	0.00E+00	0.00E+00	0.00E+00	0.00E+00
204.38	Tl	Tl+	0.00E+00	0.00E+00	0.00E+00	0.00E+00	0.00E+00
232.04	Th	Th+	0.00E+00	0.00E+00	0.00E+00	0.00E+00	0.00E+00
	Tm		0.00E+00	0.00E+00	0.00E+00	0.00E+00	0.00E+00
118.71	Sn	Sn+	0.00E+00	0.00E+00	0.00E+00	0.00E+00	0.00E+00
47.87	Ti	Ti+	0.00E+00	0.00E+00	0.00E+00	0.00E+00	0.00E+00
238.03	U	U+	0.00E+00	0.00E+00	0.00E+00	0.00E+00	0.00E+00
50.94	V	V+	1.47E-05	2.74E-05	2.54E-05	0.00E+00	2.01E-05
88.91	Y	Y+	0.00E+00	0.00E+00	0.00E+00	0.00E+00	0.00E+00
65.39	Zn	Zn+	9.53E-04	1.07E-03	1.14E-03	0.00E+00	9.42E-04
91.22	Zr	Zr+	2.54E-05	2.57E-03	3.58E-04	0.00E+00	8.85E-04
18.02		H2O	4.53E+01	4.20E+01	4.38E+01	5.55E+01	4.50E+01
32.00		O-	0.00E+00	0.00E+00	0.00E+00	0.00E+00	0.00E+00
	Totals						
	SG	sg	1.27565009	1.31496996	1.32167477	1.001	
			g/liter	g/liter	g/liter	g/liter	
12.01	TOC	TOC	0.41	0.41	0.15	0	
	SBW Solid	UDS	62.9681686	2.93488861	2.934019	0	

28276-21-089 Rev 1
Att. 2 SWA 1 of 2

Selective Adsorption Associates, Inc.
534 Gables Court Langhorne, PA 19047 USA
YOUR ONE-STOP ADSORBENT SHOP

PRODUCT DATA

MERSORB®

MERCURY ADSORBENT

MERCURY VAPOR REMOVAL FROM: AIR, HYDROGEN, & OTHER GASES

BENEFITS

- Longer Service Life
- High Hg Removal Efficiency
- Less Blower Horsepower Required
- Clean Operation
- Proven Performance
- Dependable Technical Support

PERFORMANCE FEATURES

- Pellets Minimize Flow Channelling, thus Maximizing Adsorbent Performance
- 50 % Lower Pressure Drop than 4x10 granular
- Hard, Low Dust Pellets
- Many Commercial Installations, Worldwide
- Backed by Extensive Lab & Field Test Data

PRODUCT FEATURES

- FORM: Extruded Pellets of Uniform Diameter, Available in Pellet Diameters of 1.5 mm, 3 mm, or 4 mm.
- IMPREGNATION: Elemental Sulfur Dispersed on High Surface Area Activated Carbon.
- SURFACE AREA of CARBON SUBSTRATE: 1,000 sq. meters per gram (by N_2 BET test method)
- HARDNESS: 97 % Hardness, Minimum (ASTM D 3802)
- PACKED BULK DENSITY: 34 Lbs per Cu. Ft. (550 Kg/Cu. Meter)(ASTM D 2854)
- SULFUR CONTENT: 13 Wt. %, Typical
- MERCURY CAPACITY: ≥ 20 Wt. % Hg Adsorption Capacity is Typical in Dynamic, Gas-Treatment Applications
- MOISTURE CONTENT: 3 Wt. %, Maximum (ASTM D 2867)
- pH: 6-8 (ASTM D 3838)
- RECYCLING: Spent, Hg-loaded Adsorbent Can Be Processed by Mercury Recycling Companies.

APPLICATIONS

MERSORB® mercury adsorbent has proven performance in many commercial applications requiring removal of mercury vapor to extremely low concentrations in air, hydrogen, and other gases. Typically, a gas contact time of 10 seconds is used in designing process systems with MERSORB® adsorbent. MERSORB® mercury adsorbent installations have

28276-21-089 Rev 1
Att. 2 Sht 2 of 2

demonstrated performance for reducing mercury concentrations to < 1 microgram Hg/Nm^3 in both dry and water saturated gases, with appropriate gas contact times. Extensive technical data, adsorption design and field technical services are available.

CAUTION: Wet activated carbon removes oxygen from air. Thus, an asphyxiation hazard exists inside enclosed spaces containing activated carbon. Use appropriate safety precautions when entering vessels or other enclosed spaces containing activated carbon.

MERSORB® is a registered trademark of NUCON International, Inc. (NUCON®) for impregnated activated carbons used to remove mercury from gases and liquids. Information presented herein is believed to be accurate and reliable but does not provide any guarantee or warrantee by NUCON International, Inc. or by Selective Adsorption Associates, Inc. Nothing herein shall be construed as an invitation to use processes covered by patents without proper arrangements with individuals or companies owning those patents.

Selective Adsorption Associates, Inc. 534 Gables Court Langhorne, PA 19047 USA
Telephone: (215) 702-0323 FAX: (215) 702-0577 Email: saai@selectiveadsorption.com

---

Copyright 1998-2001 © Selective Adsorption Associates, Inc.
Site design by Competitive Design Services
http://www.selectiveadsorption.com

APPENDIX D-4

Protocol for IWTU Systems Warm-Up and Initiation of Waste Feed

IWTU Heat-Up Sequence

Purpose

This document provides an overview of the start-up sequence of the Integrated Waste Treatment Unit (IWTU). The start-up sequence begins with the plant at cold shutdown with all systems de-energized or isolated. The sequence assumes that the plant has been constructed, has passed all required commissioning and Operational Readiness Review requirements, and has no procedural hold-points that prevent start-up.

Heat-Up Sequence

1. Verify that the following utility services are aligned and prepared to support system start-up:

    a. Electrical power to Power Distribution Centers and to each individual motor and panel,

    b. Compressed air to plant is available at required pressure,

    c. Nitrogen storage tanks have sufficient volume and/or additional nitrogen tankers are on order as needed to maintain liquid nitrogen levels above minimum inventory requirements,

    d. Oxygen storage tanks have sufficient volume and and/or additional oxygen tankers are on order as needed to maintain liquid oxygen levels above minimum inventory requirements,

    e. Treated water is available at the required pressure and quality,

    f. Ensure steam is available.

2. Verify that the following consumables are available in the amounts needed to support start-up and continued operation following start-up:

    g. Coal storage silos have sufficient volume and/or additional bulk supplies are available as needed.

h. Coke carbon storage silo has sufficient volume and/or additional bulk supplies are available as needed.

i. Aluminum hydroxide Carbon Reduction Reformer (CRR) additive hopper has sufficient volume and/or additional bulk supplies are available as needed.

j. CRR alumina fluidized bed media hopper has sufficient volume and/or additional bulk supplies are available as needed.

k. Denitration and Mineralization Reformer (DMR) alumina start-up bed media hopper has sufficient volume and/or additional bulk supplies are available as needed.

l. DMR alumina seed particle media hopper has sufficient volume and/or additional bulk supplies are available as needed.

3. Start up or verify operation of the IWTU building ventilation system including inlet air supply conditioning units, ventilation blowers, building high efficiency particulate air (HEPA) filters, and radiation and other stack monitor systems.

4. Perform process system checkout valve alignment.

5. Align nitrogen, treated water, and air to all process instrument and purge racks.

6. Verify nitrogen purges are on to the following:

m. Pressure transmitters;

n. Solids transfer and packaging system line purges;

o. Additive feeders and airlocks;

p. Process equipment including hoppers, feeders, and filters;

q. Waste feed injectors on the DMR;

r. Oxygen/air injectors on the CRR.

7. Start up the process offgas system, including offgas and process exhaust blowers, and process HEPA filters.

8. Start up and ensure calibration checks on the process and offgas monitor systems:

    s. Continuous Emissions Monitoring System (CEMS),

    t. Hydrogen monitors on the outlet of the Process Gas Filter/DMR,

    u. Stack monitors.

9. Start nitrogen fluidizing gas flow through the superheater to the DMR and on through the stack.

10. Adjust DMR bed level by adding start-up alumina media to the DMR bed.

11. Start heat-up of the process system by energizing the superheater and slowly increasing the nitrogen fluidizing gas temperature. (The Process Gas Filter, CRR, Offgas Cooler, Offgas Filter, HEPAs, and offgas systems will gradually heat-up in series using heat from the hot nitrogen introduced into the DMR.)

12. During heat-up verify that the Process Gas Filter and Offgas Filter nitrogen pulse back systems are functional and operating.

13. During heat-up verify that Offgas Cooler water spray cooling is working and all functions of the Offgas Cooler water and nitrogen atomizing gas supply are functional and at required levels and pressures.

14. Continue DMR heat-up until the DMR reaches $\geq 350^{o}C$, then introduce coal into the DMR bed and add oxygen to the DMR to provide additional energy input. (Oxygen to the DMR is provided by a combination of air to the atomizing gas input to the waste feed injectors and oxygen input with the nitrogen to the fluidizing gas injectors.)

15. Continue DMR heat-up until the DMR reaches operating temperature. Adjust oxygen and coal inputs to the DMR to maintain steady operating temperature.

16. Adjust the CRR bed level as necessary by adding start-up alumina media to the CRR.

17. Continue CRR heat-up using hot nitrogen from the DMR. When the CRR temperature reaches $\geq 350^{o}C$, add coal and oxygen/air input to the CRR to provide additional energy input. (The Offgas Filter, HEPAs, and offgas systems will be at normal operating temperatures by this time using heat from the hot nitrogen introduced into the DMR and heat generated in the DMR bed by the coal/oxygen inputs into the DMR.)

18. Start up or verify the oxygen monitors at the outlet of the CRR are operational and ensure calibration is current.

19. Continue CRR heat-up. Adjust the CRR bed level as needed. Once CRR temperature reaches approximately $700^{o}C$, switch from coal to coke carbon usage and initiate process gas flow through the Mercury Adsorbers.

20. Continue CRR heat-up until the CRR reaches operating temperature. Adjust oxygen/air and coal inputs to the CRR to maintain steady operating temperature.

21. Review process system operations and verify that operating parameters are within the tolerance limits specified by the permit, safety analysis, and other process requirements.

22. Switch from nitrogen fluidizing gas to steam fluidizing gas by swapping from nitrogen to steam input to the superheater. Verify that the hydrogen monitors on the outlet of the Process Gas Filter are functioning properly.

23. Ensure process samples have been taken from the feed stream, as appropriate.

24. Ensure the Waste Feed Tank level is sufficient for IWTU operations.

25. Start up the Waste Feed Pump to provide flow through the recirculation loop. Verify Waste Feed Pump operation and flow.

26. Flush the Waste Feed Injectors with water from the recirculation loop to the DMR.

27. Initiate water feed to the DMR.

28. Initiate waste feed to the DMR.

APPENDIX D-5

PLN-2020, IWTU Commissioning, Transition, and Readiness Plan, Rev 10 (Effective Date: 03/03/11)

PLN-2019, System Plan for the Treatment of INTEC Sodium-Bearing Waste Using the Steam Reforming Process, Rev. 5 (Effective Date: 05/11/11)

Document ID: PLN-2020
Revision ID: 10
Effective Date: 03/03/11

Plan

Project No. 25051

IWTU Commissioning, Transition, and Readiness Plan

Idaho Cleanup Project

CH2M◆WG Idaho, LLC is the Idaho Cleanup Project contractor for the U.S. Department of Energy

CONTENTS

1. INTRODUCTION 6

1.1 Purpose of the Commissioning, Transition, and Readiness Plan....7

1.2 Scope of the Commissioning, Transition, and Readiness (CTR) Plan 8

1.3 Commissioning, Transition, and Readiness Objectives....9

2. OVERVIEW 10

3. CHECKOUT, TESTING, AND COMMISSIONING PLAN 11

3.1 Project Organizational Relationship 11

3.2 Approach....12

3.3 Commissioning Structure....13

3.4 Commissioning Methodology....15

3.5 Roles and Responsibilities 18

3.6 INTEC Support Coordination 27

3.7 Conduct of Commissioning 29

3.8 Equipment Commissioning Activities 38

3.9 Acceptance Testing....46

3.10 Testing Closeout 48

4. TRANSITION TO OPERATIONS 50

4.1 Operations Preparations and Authorization to Start Up 50

4.2 Nuclear Operations Startup and Transition to Unrestricted Hot Operations 53

5. READINESS PROCESS 54

5.1 Preparations and General Information 54

5.2 Management Self-Assessment and Integrated Testing....58

5.3 DOE Operational Readiness Review and Authorization to Start Up Nuclear Operations 62

6. DEFINITIONS 63

7. REFERENCES 66

8. APPENDIXES 67

Appendix A, System/Subsystem List 68

FIGURES

1. CTR Plan elements and relationships 11

2. IWTU Project functional relationship 11

3. IWTU Startup organization 13

4. Interrelationship of commissioning activities 30

ACRONYMS

CAM	continuous air monitor
CC	construction component (test)
CCTV	closed-circuit television
CEMS	continuous emissions monitoring system
CORR	contractor operational readiness review
CORRTL	contractor operational readiness review team leader
CRR	carbon reduction reformer
CTR	commissioning, transition, and readiness
CWCP	construction work control package
CWI	CH2M-WG Idaho, LLC
DCS	distributed control system
DEQ	Idaho Department of Environmental Quality
DMR	denitration mineralization reformer
DOE	Department of Energy
DOE-ID	Department of Energy Idaho Operations Office
DOE-HQ	Department of Energy Headquarters
DSA	documented safety analysis
ECG	Equipment Commissioning Group (organization)
EDMS	Electronic Document Management System
ES&H	Environment, Safety, and Health
FORR	federal operational readiness review
FTSR	Final Test and Summary Report
HEPA	high-efficiency particulate air (filter)
HVAC	heating, ventilating, and air conditioning

ICARE	Issue Communication and Resolution Environment
ICP	Idaho Cleanup Project
INL	Idaho National Laboratory
INTEC	Idaho Nuclear Technology and Engineering Center
IP	implementation plan
ISMS	Integrated Safety Management System
ITAAC	inspections, tests, analyses, and acceptance criteria
IWCP	Integrated Work Control Process
IWTU	Integrated Waste Treatment Unit
I&C	instrumentation and control
JTG	Joint Test Group
LMA	line management assessment
M&TE	measuring and test equipment
MCP	management control procedure
MCR	minimum core requirement
MSA	management self-assessment
NWCF	New Waste Calcining Facility
OGF	off-gas filter
ORR	operational readiness review
OSB	Operational Safety Board
OSHA	Occupational Safety and Health Administration
PDC	power distribution center
PDD	program description document
PEL	process equipment list
PGF	process-gas filter
PLN	plan

POA	plan of action
POD	plan of the day
POW	plan of the week
PRD	program requirements document
QA	quality assurance
QAPjP	quality assurance project plan
QPP	quality program plan
RAM	radiation area monitor
RCRA	Resource Conservation and Recovery Act
RMS	radiation monitoring system
SNR	startup notification report
SO	system operability (test)
SPT	System Performance Test
TDR	Test Deficiency Report
TFR	technical and functional requirements
THOR®	Thermal Organic Reduction
TOBD	Turnover Boundary Drawing
TPR	technical procedure
TSR	technical safety requirements
TTT	THOR Treatment Technologies
UPS	uninterruptible power supply
URS-WD	United Research Services-Washington Division
URSC	United Research Services Construction
USQ	unreviewed safety question
VOC	volatile organic compound
WGS	Waste Generator Services

1. INTRODUCTION

The Integrated Waste Treatment Unit (IWTU) is to be constructed and operated at the Idaho Nuclear Technology and Engineering Center (INTEC) for the Department of Energy (DOE). Initial operations at IWTU will treat approximately 900,000 gal of liquid waste that remains from past INTEC operations. Due to the relatively high sodium content, this waste is referred to as sodium-bearing waste. The treatment process uses fluidized-bed steam reforming technology to treat the waste, producing a granular solid product suitable for packaging in waste containers and future disposal for final disposition. This Commissioning, Transition, and Readiness (CTR) Plan will be used to facilitate a smooth transition of IWTU systems, structures, components, procedures, programs, and personnel from the construction phase through equipment commissioning, transition to operations, and readiness activities, culminating in full IWTU operations.

The IWTU Project has completed its CD-3 milestone (Approval to Start Construction) and construction is currently underway. The next milestone is CD-4, Approval to Start Operations. DOE Order 413.3A, "Program and Project Management for the Acquisition of Capital Assets," Change 1 (November 17, 2008), lists the following CD-4 requirements. This CTR Plan describes how these requirements will be accomplished.

CD-4 Requirement	Addressed By
Verify Key Performance Parameters or Project Completion Criteria have been met and mission requirements achieved.	Commissioning activities, as governed by this CTR Plan and referenced documents. See Section 3.
Complete a Readiness Assessment or an Operational Readiness Review and resolve all prestart findings, including ensuring Operations and Maintenance staff are properly trained and qualified to operate and maintain the equipment, systems, and facilities being turned over.	Readiness activities, as governed by this CTR Plan and referenced documents. **NOTE:** *As this is the initial startup of a new Hazard Category 2 nuclear facility, an operational readiness review will be required.* See Section 5.
Issue a Checkout, Testing, and Commissioning Plan that identifies subtasks, systems, and equipment. The commissioning plan ensures that the equipment, systems, and facilities including high performance sustainable building systems, perform as designed and are optimized for greatest energy efficiency, resource conservation, and occupant satisfaction. The commissioning plan includes checkout and testing criteria required for initial operations.	Commissioning activities, as governed by this CTR Plan and referenced documents. **NOTE:** *This CTR Plan will serve as the IWTU Checkout, Testing, and Commissioning Plan.*

CD-4 Requirement	Addressed By
Issue a Project Transition to Operations Plan that clearly defines the basis for attaining initial operating capability, full operating capability, or project closeout, as applicable. The plan includes documentation, training, interfaces, and draft schedules.	Transition activities, are outlined in this CTR Plan and described in detail in PLN-3588.
Issue an updated Quality Assurance Plan to address testing, identified deficiencies, and startup, transition, and operation activities.	Transition activities, as governed by this CTR Plan and referenced documents. See Section 4.
Revise the environmental management system to ensure that it incorporates new environmental aspects related to turnover and operations.	Transition activities, as governed by this CTR Plan and referenced documents. See Section 4.
Prepare the Documented Safety Analysis with technical safety requirements for Hazard Category 1, 2, and 3 nuclear facilities.	Transition activities, as governed by this CTR Plan and referenced documents. See Section 4.
Update the Construction Project Safety and Health Plan.	Transition activities, as governed by this CTR Plan and referenced documents. See Section 4.
Finalize the Hazard Analysis Report and obtain DOE approval (field level).	Transition activities, as governed by this CTR Plan and referenced documents. See Section 4.
Prepare a Safety Evaluation Report based on a review of the documented safety analysis and technical safety requirements for Category 1, 2, and 3 nuclear facilities.	Transition activities, as governed by this CTR Plan and referenced documents. **NOTE:** *The safety evaluation report is issued by DOE-ID.* See Section 4.

1.1 Purpose of the Commissioning, Transition, and Readiness Plan

The purpose of this CTR Plan is to describe the approach taken in organizing and managing the commissioning activities of the IWTU facility, support utilities, components and systems that comprise the IWTU Project. It also defines the elements of commissioning, identify the equipment and systems to be tested, and provide a clear definition of the support requirements needed during the commissioning activities, such worker training and qualification; development of equipment and system test criteria, system test procedures (component and system *testing* [see def.]), maintenance procedures and technical procedures (TPRs); and a description of environmental, safety and health (ES&H), and security

requirements. This plan will also include a description for jurisdictional turnovers, from United Research Services Construction (URSC) to CH2M-WG Idaho, LLC (CWI) IWTU Equipment Commissioning Group (ECG) and from IWTU ECG to IWTU Operations and Maintenance.

1.2 Scope of the Commissioning, Transition, and Readiness (CTR) Plan

This plan applies to all plant-related activities conducted during the commissioning of the IWTU Project. The plan defines activities involved in plant commissioning, and defines the interfaces between the ECG test team and URSC, and other IWTU Project organizations involved in the commissioning process. Activities include preparation of plant equipment, personnel, and documents to conduct full scale operations of the IWTU. This plan provides a general overview of the commissioning methodology and activities required to prepare IWTU for full scale operations to treat the sodium-bearing waste.

The commissioning process consists of four stages: (1) Precommissioning, (2) commissioning and startup, (3) optimization, and (4) operational readiness.

The precommissioning stage is broken down into the following elements:

- *Vendor or factory acceptance testing* (see def.)
- *Mockup testing* (see def.)
- Document preparations and approvals
- System/subsystem turnover from Construction to ECG.

The commissioning and startup stage is further broken down into the following elements:

- Component *tests* (see def.)
- *System operability (SO) tests* (see def.)
- *Integrated test* (see def.)
- System turnover from ECG to Operations.

The Optimization stage is broken down into the following elements:

- *Other tests* (see def.) as required
- Operations and Maintenance personnel proficiency period
- Hot Nitrogen Demonstration Runs
- *System performance testing* (SPT; see def.)
- Deliberate nuclear operations.

The operational readiness stage is broken down into the following elements:

- Preparations
- Management self-assessment (MSA)
- Contractor operational readiness review (CORR)
- Federal operational readiness review (FORR).

All testing performed in support of IWTU commissioning is included within the scope of this plan. This includes vendor or factory acceptance testing, construction component (CC) testing, electrical and instrumentation and control (I&C) testing, SO testing, integrated testing of the process system that include the utilities required to support the process, and a SPT. Also in the scope of this plan is the system turnover process used to transfer control of each system to ECG when construction is completed and to Operations when commissioning is completed. In discussing these activities, this plan identifies the procedures to be followed to ensure a controlled and safe commissioning process.

MCP-2040, "IWTU—Turnover Process," provides the process for a phased and orderly turnover; MCP-2075, "Test Control Procedure for the Integrated Waste Treatment Unit (IWTU)," provides the process and test control for development and field implementation of the test procedures and work instructions that will be used for the acceptance testing activities. Lastly, this plan describes the documentation used to demonstrate compliance with the work planning documents and establishes a test and summary record that will provide evidence that the IWTU *structures, systems, and components* (see def.) meet or exceed the projects testable requirements as specified in the *inspections, tests, analyses, and acceptance criteria (ITAAC*; see def.*)* tables, procurement and system specifications and vendor manuals and any additional requirements that has been defined by the IWTU Design Authority.

Additional details on the readiness review plans and the startup of IWTU can be found in PLN-3722, "Management Self Assessment Plan for Startup of the Integrated Waste Treatment Unit," PLN-3485, "Contract Operations Readiness Review Plan of Action for the Integrated Waste Treatment Unit," and PLN-3350, "IWTU-Startup Plan."

1.3 Commissioning, Transition, and Readiness Objectives

As part of the IWTU Project, the facility will undergo testing to demonstrate that the IWTU structures, systems, and components meet or exceed project requirements as specified in the ITAAC tables, procurement and system specifications and vendor manuals, and any additional requirements defined by the IWTU Design Authority. More specifically, the IWTU ECG objectives include:

A. Documenting construction completion and turnover of systems from URSC

B. Demonstrating that equipment meets design requirements

C. Demonstrating that equipment operates safely

D. Verifying that remote maintenance tools function as intended

E. Demonstrating that the process operates as an integrated process system located in the IWTU facility

F. Tuning process control loops

G. Setting the operational parameters

H. Validating operating procedures during commissioning activities

I. Identifying and resolving component and system operational problems during commissioning activities

J. Utilizing IWTU Operations during commissioning activities

K. Demonstrating that the process meets environmental regulations

L. Establishing facility readiness for operation.

2. OVERVIEW

The remainder of this document provides the details of the CTR Plan. Each of the next sections discusses an aspect of the overall plan:

Section 3 is the Checkout, Testing, and Commissioning Section and is intended to provide an overview of the commissioning activities along with PLN-3588, "IWTU Transition to Operations Plan" that provides compliance with DOE O 413.3A. This section describes the activities necessary to complete checkout, component testing, system testing, system turnover, integrated testing, and system performance testing. It also covers the turnover of systems from URSC to ECG, and from ECG to Operations.

Section 4 is the Transition to Operations Section and is intended to provide compliance with DOE O 413.3A. This section describes the activities that Operations must complete prior to entering the readiness process. This section also describes the activities Operations performs following successful completion of the readiness process, beginning with deliberate nuclear operations and leading to full capacity operations.

Section 5 is the Readiness Plan. Although not explicitly required by DOE O 413.3A, it is required in support of DOE O 425.1D, "Verification of Readiness to Start Up or Restart Nuclear Facilities," and is included as a good practice and to ensure a complete picture of the total set of activities required to transition to full operations. This section describes the readiness activities, which generally take place between the two parts of transition to operations.

Figure 1 provides a high-level depiction of how these items relate to each other.

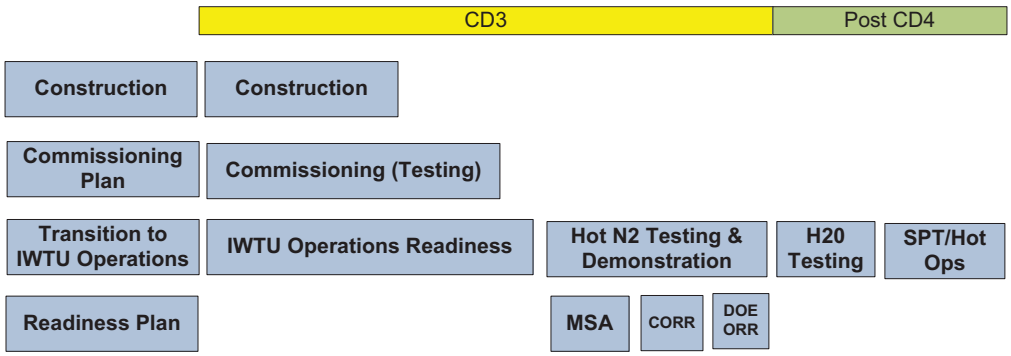

Figure 1. CTR Plan elements and relationships.

3. CHECKOUT, TESTING, AND COMMISSIONING PLAN

3.1 Project Organizational Relationship

The organizational relationships that exist between the IWTU Project organizations and the CWI support organizations during the commissioning process are important in order to achieve a successful startup of the facility and systems. This functional relationship is presented in Figure 2.

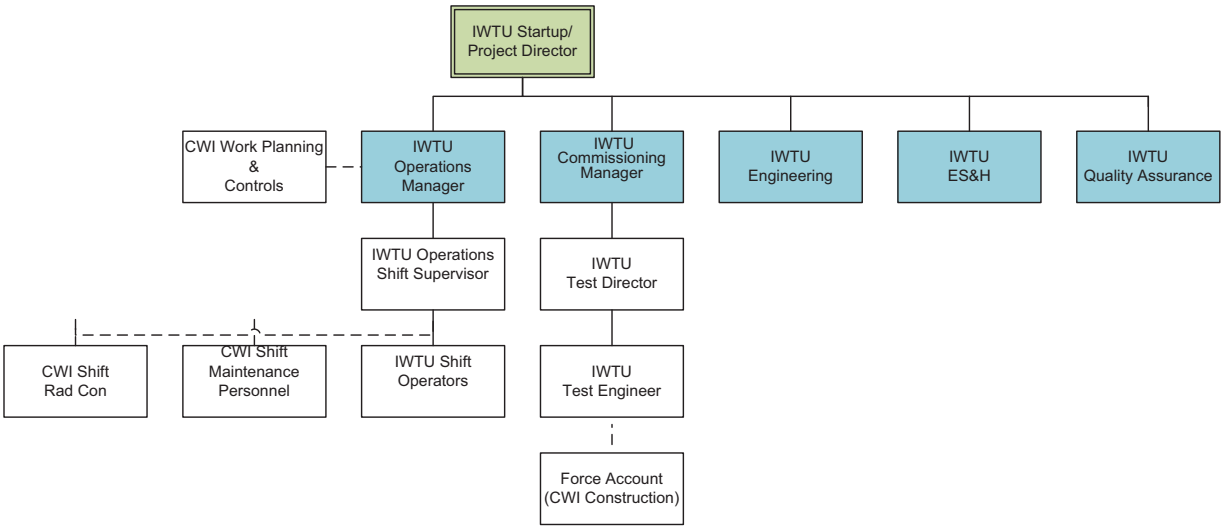

Figure 2. IWTU Project functional relationship.

3.2 Approach

This plan outlines the process to be followed during equipment commissioning activities. This plan also helps to organize commissioning activities in a logical order so that the required resources are obtained and are available when needed. In addition, this plan is intended to provide structure and rigor to the commissioning activities to ensure testing is carried out in an orderly and efficient manner. This is accomplished by establishing a formal commissioning process that includes:

- Early planning, organization, and preparation for testing and transition
- Systematically performing required testing
- Documenting testing, system turnover, and transition activities.

This methodical approach to commissioning will ensure that steps are not omitted and will assist in measuring commissioning progress and managing the commissioning budget. This plan is to inform IWTU Project management, IWTU Project personnel and CWI support organizations of the requirements and guidelines to be followed and the structure to be used in the commissioning process.

One of the key elements of the systemization approach is the establishment of a *Joint Test Group (JTG;* see def.). The JTG is responsible for review and approval of programs, test directives, and test instructions to ensure that the testable and operating requirements have been identified and are sufficient to demonstrate acceptability of systems. However, it is not intended to duplicate the management review process already in existence and established by other Idaho Cleanup Project (ICP) programs. A prime responsibility of the JTG is the oversight of the commissioning program and the approval of the test instructions and test results. The task of the JTG is to provide a comprehensive review and approval of the following documentation as described in CTR-283, "IWTU—Joint Test Group:"

- Component and SO test instructions
- Integrated test instructions (water run, and SPT)
- Final test and summary packages.

The JTG is a committee of key project personnel and CWI management that has been established to review and assess test results and related documentation, and provide final approval of the system(s) test and summary package that will be used as part of the objective evidence files to show the IWTU Project is ready for hot start operations.

There are several steps involved in the preparations to begin operations of IWTU in addition to the commissioning activities associated with testing of the components and systems. These additional steps are the responsibility of other IWTU organizations and are not discussed or described in this plan. Additional information and guidance related to these efforts is provided in PLN-3722, "Management Self Assessment Plan for Startup of the Integrated Waste Treatment Unit."

To ensure the successful commissioning and startup of IWTU, a strategy has been developed that is based on organization, structure, and process. The relationship of this organization, structure and process is integrated and a subset of the overall IWTU project. The functions that are part of the subset of the Startup organization are captured in the IWTU Project schedule. These activities and events are tied into the logic that supports the Construction schedule and provide the process and control of activities that transition the IWTU facility into an operational facility. The processes utilized in this transition are outlined within this plan and are further developed in MCP-2040 and MCP-2075; they will be discussed further at a later point within this plan. The IWTU Startup organization and structure are presented in Figure 3 below.

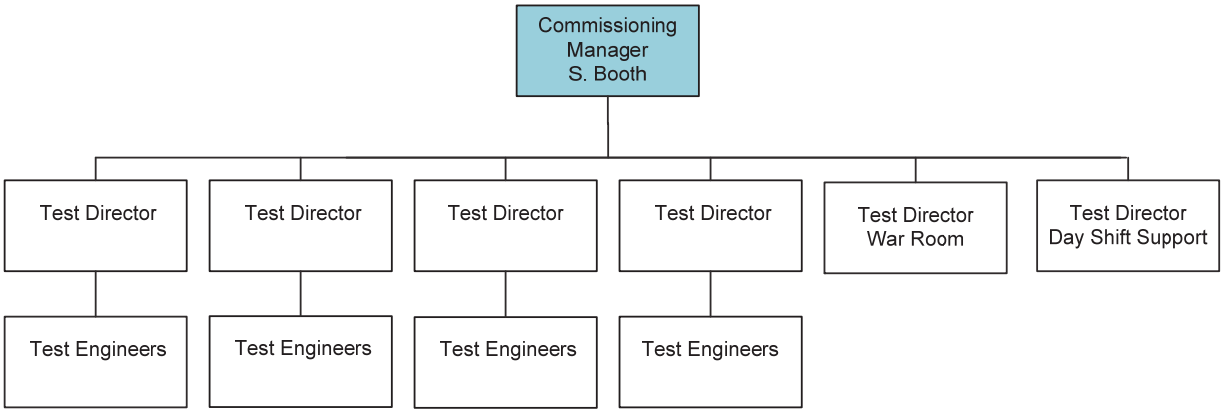

Figure 3. IWTU Startup organization.

3.3 Commissioning Structure

3.3.1 Equipment Commissioning Group (ECG)

The ECG reports to the IWTU Startup/Project Director and is the group within the IWTU Startup organization, which is responsible for the IWTU commissioning activities. This group consists of a *Commissioning manager* (see def.), *test directors* (see def.) and *test engineers* (see def.) and related personnel and will be the responsible organization for the preparation of the test directives and test instructions, providing the direction to Operations and Craft personnel during the field commissioning activities. During the transition period of commissioning,

ECG will provide the guidance and direction necessary to achieve a successful startup and testing program. The ECG will be responsible for collecting the essential data and documentation for the component, systems and integrated testing activities that will be used to demonstrate and prove the facility and systems meet the functional and operational performance requirements and meet the requirements of DOE O 425.1D.

The ECG along with the Design Authority group will establish and coordinate the acceptance testing required by equipment suppliers to the IWTU Project. This will include witness of selected vendor and factory acceptance tests and the URSC CC tests, review and approval of vendor data submittals that pertain to acceptance tests, and review and approval of CC testing documentation that will be submitted as part of the construction turnover package.

All ECG test personnel will be qualified as a test engineer per PLN-3038, "IWTU Training Program Description." The test engineer qualification will meet the intent of ASME NQA-1, Appendix 2A-1, to support the commissioning of the IWTU components and systems. This along with the training of the IWTU Operations personnel will enhance the ability of ECG to complete the commissioning of the IWTU facility.

3.3.2 Joint Test Group

The JTG plays a key role within the commissioning structure and is an integral part of the planning and execution of the commissioning phase of the IWTU Project and will meet periodically during the process to review and approve test plans and procedures as they are completed. The depth of review will ensure that the testable requirements and *acceptance criteria* (see def.) have been incorporated into the test directives and test instructions.

The JTG will also review completed test results and summary package that includes the testing documentation for the IWTU. At the completion of each system test, a test and summary package will be assembled with all required commissioning documentation. The JTG will review the test and summary package, and the completed test documents to determine the adequacy of the completed test documents prior to the system being turned over to IWTU Operations. In the event that the results of any given test do not produce clear proof of meeting the predefined acceptance criteria, the JTG will provide detailed comments on the deficiencies in the test documents. The ECG will provide recommendations for corrective actions that need to be implemented to remedy the deficiencies identified by the JTG review. The JTG will concur with the ECG recommended corrective actions.

The JTG provides an independent review of the commissioning process information to ensure that the expected standard of testing performance and documentation are achieved and maintained.

3.4 Commissioning Methodology

3.4.1 Division of the Process into Systems and Subsystems

One of the key elements of ECG is to define the IWTU testable boundaries of each system. Depending on the size and complexity of the system, systems may be divided into subsystems and/or minor subsystems. Ultimately, the systems, subsystems, and minor subsystems are delineated as individual components.

Systems, subsystems, minor subsystems, and components are organized in a comprehensive database (known as the commissioning database). This database includes the equipment and components that comprise each system. Turnover Boundary Drawings (TOBDs) are used to communicate the scope of a system to construction. The TOBDs reside in EDMS. The component databases are maintained as described in PLN-2907, "Software Management Plan for IWTU Instrument Database," and PLN-3436, "Software Management Plan for IWTU Process Equipment List (PEL)."

3.4.2 Control of Commissioning Activities

Control of the commissioning process will be in accordance with MCP-2075, which provides an orderly, structured process (but still allows for application of a graded approach) to deal with the unique aspects of each system and unforeseen events and/or test deficiencies that may arise during the commissioning process.

To guide the equipment turnover process, Construction will follow United Research Services-Washington Division (URS-WD) Manual No. 1, *Management Systems*, Procedure 1P-7.0, "Turnover Plan," while commissioning will follow MCP-2040.

To ensure that all of the required documentation that has been generated during the construction phase is turned over to ECG in an acceptable format, MCP-2040 is used to provide a turnover package checklist that identifies the required documentation to be included in the URSC turnover package. Additional items can be added to the checklist if needed. The turnover checklists will be initiated well in advance of system turnover, and agreed to by the IWTU ECG manager, IWTU Operations manager, IWTU Design Authority and URSC manager as to the content of the checklist. A copy of the checklist will be given to the

Construction manager or designee for the development of the turnover package.

Test directives and test instructions, which include work orders and TPRs, will be used to provide rigor in the organization, preparation, and execution of all tests, while allowing for a graded approach when and where appropriate. For example, more rigor is needed when performing a high-temperature, integrated test involving the entire facility and hazardous materials in comparison to testing a simple component at room temperature with no hazardous materials in the system. MCP-2075 will be used to guide personnel in preparing test procedures. It is based on PRD-5082, "Test Control," and is tailored to the commissioning of the IWTU facility and systems. MCP-2075 standardizes the test procedure development process, ensuring that (1) the needed structure is included in preparation of test directives and test instructions, and (2) that each test performed will be consistent with the content and format of the plans and procedures.

3.4.3 Types of Testing

Another key element in the testing strategy is to divide the testing up into basic test functions. Mockup tests will be conducted on unique equipment to demonstrate the equipment works as intended prior to or during installation. Factory acceptance testing on complex systems or components will be done at the vendor's facility to demonstrate the equipment meets the contract requirements prior to being shipped to the IWTU site. After the equipment is installed, Construction will perform CC testing to ensure the equipment is installed properly and complies with the functional requirements.

After a system is turned over from URSC, ECG will conduct component and system testing that will be used to verify that the components and equipment within a system function independently, and that the system operating parameters meet the requirements and acceptance criteria as defined. Electrical and I&C tests will be conducted on specified electrical and I&C controlled components. After completion of the necessary component and system testing, integrated testing will be conducted. This testing will be completed in two phases. The first test will use heated nitrogen due to the reduced hazards involved to tune the process under elevated temperatures. Once that is complete and the facility has achieved CD-4, the second phase will use water and radioactive waste to test and tune the process systems under operating conditions. During this last phase of testing will be the SPT. This test will demonstrate the plant is compliant with environmental regulations and will set the operating envelope to ensure the process remains compliant during normal operating conditions.

In general, the commissioning program starts out with component tests. The tests become more complex as they progress through the different phases. Using this approach, simple functions of the system are proven before more complex functions. This allows simple problems to be easily identified since they are not hidden by complex situations. Additionally, when the more complex testing is conducted, progress will not be hampered by the focus being diverted to simple problems.

3.4.4 Commissioning Sequence

Systems within IWTU will be commissioned in a logical order that is detailed in the integrated project schedule. The system turnover from construction will, to some extent, dictate the commissioning sequence along with the system prerequisites that may require additional systems to have been commissioned successfully prior to commissioning the next system. A system/subsystem list is located in Appendix A.

3.4.5 Commissioning Schedule

The commissioning schedule is integrated into the integrated project schedule. This will be done to minimize the overall project duration to the greatest extent possible. Systems will be turned over from URSC for commissioning as soon as they are completed. Component testing on these systems will begin shortly after turnover. Consequently, testing will be ongoing as Construction completes installation and CC testing of the other systems. Likewise, as soon as a system is successfully tested, it will be turned over to IWTU Operations; again using a phased turnover process as outlined in MCP-2040.

3.4.6 Jurisdictional Control

When a system is turned over from URSC to ECG, jurisdictional control will be transferred to ECG. At that point, Operations will hang the jurisdictional control blue tags, on behalf of the ECG, on the components and equipment that is in the turnover boundary. This is to identify the physical control and system boundaries to URSC and IWTU operation personnel as described in MCP-2040. This is also the case for green tags when the system has been turned over to IWTU Operations. Tagging of the components and equipment is intended to prevent personnel from other organizations from working on a system without first notifying and obtaining permission from the organization having jurisdictional control of the system.

MCP-2040 further directs that personnel protection following turnover be accomplished in accordance with MCP-3651, “Chapter IX—Level I & II Lockouts and Tagouts.” It should be noted that jurisdictional control

tagging will not replace a lockout/tagout program. When equipment is turned over to ECG and/or IWTU Operations, the CWI lockout/tagout program (which will be controlled by IWTU Operations) will be used during the commissioning and operations activities. After a system has been turned over from URSC, it will be turned back to Construction when defects are found that requires URSC to fix or repair and for the completion of punchlist items. When this is required, then ECG will use the turnback to construction process, as detailed in MCP-2040. When minor problems are encountered during testing, the system will stay in control of the ECG organization and will use the process that is detailed in MCP-2075 to resolve the problem.

3.4.7 Corrective Actions

During the course of the testing process, it is anticipated that components and system defects, procedure changes and temporary modifications to system design may arise that require repairs and modifications to components or changes to the test instructions. This will be controlled using the *Test Deficiency Report* (TDR; see def.) process outlined in MCP-2075. The TDR process provides the mechanism to identify the problems and the corrective actions required to correct the problems. The ECG will generate the TDR by identifying the problem, the IWTU Design Authority will provide the disposition to correct the problem and then ECG will be responsible to correct the problem in the field. The same process will also be used if the problem requires a nonconformance report be written.

The TDR process will identify and track all deficiencies to closure during the commissioning activities.

3.5 Roles and Responsibilities

This section describes the roles, responsibilities, and relationships of those organizations that support the testing and startup of the IWTU facility and systems. These functions define the interfaces and interactions that are necessary for IWTU to successfully achieve the completion of the transition from Construction to Operations. The subsets of the IWTU Project and their respective contribution are identified below.

3.5.1 Equipment Commissioning Group (ECG)

A team of startup engineers are the core of the ECG organization. This core group will consist of process, mechanical, distributed control system (DCS), and electrical, and I&C engineers. These engineers are experienced in following the required ICP procedures, IWTU test control

procedures, radiological controls, and system commissioning, as well as their particular engineering discipline.

In addition to this core group, ECG is supplemented with IWTU operators, engineers from Thermal Organic Reduction (THOR) Treatment Technologies (TTT), and subcontract companies with the experience required to support all phases of commissioning.

The ECG will also be supported by additional IWTU support organizations such as System Engineering, ES&H and Quality Assurance. The ECG will also be supported by the CWI Work Planning and Controls, Maintenance and Construction organizations.

The responsibilities of ECG include:

- Revise this plan/process as needed
- Develop and maintain the facility testing-and-commissioning schedule
- Control Testing in accordance with MCP-2075
- Review testing procedures for factory acceptance testing and construction testing
- Witness and document selected factory acceptance testing of equipment and/or assemblies
- Develop mockup tests and procedures
- Coordinate system turnover from URSC, including establishing requirements for the construction turnover packages
- Develop a commissioning data base that will include the equipment and instruments that are required to be installed per the design documents. The commissioning database provides a user interface with the PEL and Instrument databases. This ensures the commissioning database is current with design.
- Development of the final test and summary package that will provide the documentation required for turnover to IWTU Operations
- Support the ITAAC and Specification Rolldown processes by helping to develop ITAAC and specification rolldown table tables

- Implement the testable requirements from equipment/procurement specifications along with the vendor manuals and additional requirements as defined by the IWTU Design Authority
- Coordinate and support the CWI work planning and control process in the preparation of the test package work orders to support component and system testing
- Coordinate and support the CWI work planning and control process in the preparation of the component calibration and maintenance work orders
- Ensure that the work is prioritized and scheduled on the plan of the week (POW)
- Prepare component test instructions
- Conduct component tests
- Prepare test directives and system operability (SO) test instructions
- Conduct SO tests
- Prepare integrated test instructions that include the following:
  - Water run
  - preliminary SPT dry
  - SPT
- Conducts integrated tests
- Support preparation of the SPT plan for submittal to the Idaho Department of Environmental Quality (DEQ)
- Support INTEC/IWTU Environmental as they work with DEQ
- Support IWTU during the MSA and operational readiness review (ORR) processes.

3.5.2 Joint Test Group

The JTG will provide senior management oversight of test planning and execution, and completion as outlined in CTR-283. The functions of the JTG are as follows:

- Review and approve ECG test documents for equipment and systems being commissioned as part of the IWTU to ensure they are comprehensive and have clear and objective success criteria

- Review and approve test result reports to evaluate whether test objectives are fully met

- Concur with recommendations for corrective actions in the event objectives are not fully attained

- Review the disposition of the corrective action(s) taken.

- Approve changes to test documents approved by the JTG as discussed in MCP-2075.

3.5.3 IWTU Design Authority

Design Authority engineers, also known as system engineers, are involved in all phases of IWTU startup, testing, and commissioning. As such, this organization is knowledgeable of equipment design and the overall plant configuration, procurement and fabrication of equipment, installation of equipment, and testing and operation of the equipment. Consequently, Design Authority engineers will have direct involvement in all factory acceptance testing and will provide extensive support to ECG during test instruction preparation and commissioning activities. Specifically, Design Authority engineers will:

- Concur with the boundaries of systems, subsystems, and minor subsystems that have been provided by ECG for use in turnover from Construction and for testing

- Own the ITAAC process to ensure comprehensive test criteria are established for all components, minor subsystems, subsystems, and systems

- Identify from the IWTU specifications the inspection and test requirements per PLN- 3692, “Plan For Specification Rolldown Process”

- Provide acceptance criteria by which the acceptability of components, minor subsystems, subsystems, and systems are determined

- Review and approve factory acceptance test procedures

- Witness and document factory acceptance testing

- Review mockup test plans and procedures
- Participate in URSC *walkdowns* (see def.)
- Review and approve the URSC turnover package
- Process facility design changes, if needed, to correct design deficiencies or system/component performance problems
- Provide the required information to ECG to support the planning and test instruction preparation
- Review test instructions and test plans
- Support ECG during test procedure implementation in the field
- Consult on the planning and preparation of the integrated test instructions
- Review integrated test instructions/procedures
- Support integrated testing
- Consult on the planning and preparation of the SPT
- Review the SPT plan, quality assurance project plan (QAPjP), and procedures
- Support the preliminary and SPT
- Maintain facility configuration control.

3.5.4 IWTU Operations

IWTU Operations will establish the infrastructure and staff required to provide operations support to the commissioning teams during commissioning and startup activities on a 24 hours/day, 7 days/week schedule, or as required. At the conclusion of component and system testing, jurisdictional control of subsystems, systems, and facilities will be turned over from ECG to Operations. In general, the process systems and solids handling systems will be turned over following the Hot Nitrogen testing. Operations will play a lead role in completing the optimization and ORR stages of commissioning in preparation for beginning nuclear operations.

An experienced operations staff, including experienced nuclear operators, has been formed. This staff will play a key role in the

commissioning process during the commissioning of the components and systems. The IWTU Operations personnel will utilize the DCS to perform the components and system valve and electrical lineups that are required to support startup and commissioning test activities. They will operate the systems as required by the test instruction(s) in support of the commissioning activities. They will also operate systems as required to provide for additional run-in time. Additional responsibilities are:

- Participate as the lead of the ITAAC process
- Participate and/or conduct the shift turnover
- Provide limited field use validation operational procedures for procedure validation during commissioning activities
- Provide and use TPRs to operating equipment and systems as required by ECG for testing or while the system is waiting for final turnover to Operations
- Review and approve all turnover package checklists
- Review test directives and test instructions for test accuracy
- Provide trained and qualified operators to support equipment commissioning in the completion of component, system, and integrated testing
- Operations manager authorizes work via the POW process.

3.5.4.1 Plan of the Day (POD) Meeting

A POD meeting will be held on a daily basis to status the scheduled work, which supports IWTU commissioning, testing, and operations. The POD meeting includes activities such as outage/work order planning, engineering design activities, SAR updates, etc. (activities that may lead up to field work by Maintenance, Construction, Operations or other field execution groups).

Any group who has work represented on the schedule must be present at this meeting. The Startup director or Operations manager will oversee the conduct of the meeting as the scheduler facilitates status of the schedule. The POD activities are based on the POW. The POW is issued weekly and covers a one week work window of authorized work. The POW will be signed by the URS Construction Manager

or the CWI Force Account Manager, Commissioning Manager and Operations Manager. The Operations manager's signature documents the work authorization function as required by PDD-1005, "ICP Management and Operations Manual."

3.5.4.2 Conduct of Work Release

The IWTU Operations Shift Supervisor performs the start-of-work release function per PDD-1005 for all Operations, ECG, or Maintenance work to be performed that shift. The Shift Supervisor will only release work that is authorized on the POW or via the emergent work process. The URSC superintendent will continue to release URS construction work until systems are turned over to the ECG. Following turnover, URSC work on systems owned by the ECG is addressed in MCP-2040. The Shift Supervisor and the URSC Superintendent must coordinate each shift to ensure that the facility can safely support all the work that is being released.

Most work will be given the start-of-work release during the shift brief; however, emergent issues may require the Shift Supervisor to release work later in the shift.

3.5.5 IWTU Quality Assurance (QA)

IWTU Quality Assurance will provide support during equipment commissioning activities using quality assurance personnel (quality engineers) and quality control personnel (quality inspectors) to verify that systems, structures, and components conform to specified requirements. IWTU QA will review test directives and test instructions and determine quality "HOLD" and witness points as needed to verify compliance to specific testing activities.

IWTU QA will support ECG as required during the commissioning activities to witness and document field testing activities (such as component testing, performance testing, and integrated testing of IWTU components and systems). They will focus on problem identification, problem analysis, and problem correction. After repairs or modifications are made, the effectiveness of these repairs or modifications will be verified as testing continues. IWTU QA personnel will provide feedback to ECG and other organizations on test performance activities and test data documentation.

IWTU QA will ensure that testing program activities and processes specified in testing documents meet identified acceptance and hold point criteria. They formally review test documents, including test instructions (e.g., SO test, integrated test, SPT), test directives, and test data sheets to ensure test and acceptance criteria have been incorporated. Test results and test data will be reviewed and validated against acceptance criteria and hold-point criteria. Audits and surveillances will be performed on program and process activities associated with commissioning.

3.5.6 IWTU Environmental

An ES&H organization has been formed as part of the IWTU Project. The Environmental group within ES&H is responsible for ensuring the project objectives are in compliance with environmental permits and regulations, and for maintaining environmental permits and plans as they pertain to IWTU. Specifically, the Environmental group:

- Ensures compliance with approved environmental permits and plans by providing oversight
- Participates in the development of the test instructions
- Prepares and submits environmental permit applications, plans and update existing permits for DOE review and DEQ approval
- Participates in the development and planning of the integrated tests to ensure environmental compliance and acceptance
- Regularly communicates with regulators to keep them informed and considers input they may have
- Observes operations, monitoring, and sampling.

3.5.7 IWTU Safety

Worker safety is the highest priority at IWTU. All workers have the authority to stop work or call for a step back as described in MCP-553, “Step Back and Stop Work Authority,” if they feel an unsafe condition exists or an unsafe step is being taken. The Safety group within ES&H assists the IWTU work force in maintaining a safe work environment. Their responsibilities include:

- Establishing a safety program that includes fire protection
- Providing support to establish protective equipment and administrative controls

- Performing oversight, including monitoring and walkthroughs
- Ensuring safety equipment is available, functional, and used appropriately
- Observing activities during testing to ensure compliance with CWI safety procedures, programs, and expectations
- Providing guidance to workers to help them work in a safe manner.

3.5.8 URS-WD Construction (URSC)

The URSC organization is responsible for overall construction project management, construction, installation, and procurement of equipment and materials for IWTU. URSC will be responsible for jurisdictional turnover of subsystems, systems and facilities; supporting post-turnover commissioning and startup activities, as requested; and completing and/or turning over punch-list items. They will be responsible for construction component (CC) testing to validate that all components were installed correctly and meet their installation requirements. Specifically, Construction will:

- Provide CC checkout procedures
- Conduct CC checkouts to demonstrate that IWTU has been built in accordance with design, construction plans and specifications
- Provide skilled crafts for installation of components and systems
- Provide the required documentation for system turnover to ECG per MCP-2040 and URS/WD 1P-7.0, "Turnover Plan"
- Provide skilled crafts to make repairs or modifications when problems or configuration improvements are identified during commissioning see MCP-2040.

3.5.9 THOR Engineering

THOR Treatment Technologies (TTT) is the developer of the technology to be used in the IWTU process. They have operational experience from pilot-plant testing and from the operation of their facility in Irwin, Tennessee. Based on this experience, TTT engineers will support ECG in developing test plans and procedures, and consulting on the process vessels and integrated tests as required. They will provide technical support as required to resolve process related issues as they arise.

3.5.10 Training

Training and qualification of personnel is an integral part of the overall commissioning and startup effort. To accomplish this, the IWTU Training Department will be responsible for managing the IWTU personnel-training and qualification program. Although commissioning and Operations management will identify the specific training requirements for individuals; scheduling and conduct of training will be performed by the Training Department. The training program will ensure IWTU has a qualified workforce to satisfy operational needs. Commissioning personnel will attend selected informational briefings and training in preparation for precommissioning and commissioning activities. The goal of commissioning team personnel training is to prepare the test directors and startup engineers to plan and conduct component and system testing and to execute these activities in a safe and efficient manner.

3.6 INTEC Support Coordination

Support from organizations that reside within the INTEC organization is provided through the Integrated Work Control Process (IWCP) identified in STD-101, "ICP Integrated Work Control Process." The interface agreement with the INTEC organizations is controlled by IAG-410, "Interface Agreement Between IWTU, IAO/LWFC, and CWI Construction, for the IWTU Construction Project."

3.6.1 CWI (INTEC) Work Planning and Controls

The INTEC Work Planning and Controls organization will support the ECG by providing the required work orders that support the commissioning test procedures for the field testing activities. Work orders will also be generated for preventive maintenance and maintenance activities. All work orders will provide the required guidance and direction to control the work in a safe and compliant manner along with the hazard identification and mitigation process, used for the implementation of the Integrated Safety Management System (ISMS) into the work control process.

The principal duties of the Work Planning and Control organization include:

- Prepare test package work orders as required to support the ECG's test procedures during the commissioning activities
- Prepare for work orders for preventive maintenance and calibrations of instruments

- Prepare maintenance work orders as required to support commissioning and operational activities during testing.

3.6.2 CWI Force Account

The primary goals of the Force Account organization are to implement and support work within and during the commissioning process, perform the work necessary for safe and reliable plant operations, complete all activities on schedule to provide the information needed to maximize IWTU availability and efficiency during commissioning, and review work coordination and schedule adherence following implementation to identify improvements and achieve excellence in work management.

The Force Account organization plans, coordinates, and performs tasks that are indentified by the ECG during the commissioning phase of the project. The principal duties of the Force Account supervision and organization include:

- Participating in the POW and POD
- Participating in the shift turnover
- Preparing work packages as identified to support commissioning activities and to complete to work required to complete punch-list items and testing support
- Organizing and prioritizing site resources to ensure tasks are executed as planned to complete component and systems testing and initiate facility operation
- Coordinating performance of facility tasks, supporting IWTU commissioning plant activities, and assessing effectiveness of related work control
- Establishing methodologies to enable the CWI construction craft and other personnel to perform work with minimal impact to facility operations
- Managing the daily activities of Force Account personnel and providing a single management contact for CWI Construction Craft interface during the commissioning process.

3.6.3 CWI (INTEC) Maintenance

CWI Maintenance will establish the infrastructure and staff required to provide maintenance support to the commissioning teams during commissioning and startup; and to Operations during the optimization

and ORR reviews, to include support of 24 hours/day, 7 days/week operation of IWTU when this occurs. Specifically, the plant Maintenance organization will be responsible for training and certifying Maintenance personnel, preparing and practicing plant nuclear operations maintenance activities, demonstrating IWTU's ability to carry out nuclear operation maintenance activities, maintaining stored equipment (installed and warehoused) including maintaining approved property maintenance system and records, and performing equipment/system maintenance following turnover from Construction to ECG.

3.6.4 CWI Radiological Control

CWI Radiological Control support will not be required during commissioning activities. However, they will support IWTU Operations in the preparation for the MSA and the ORRs.

3.7 Conduct of Commissioning

The actual conduct of testing is the culmination of the efforts described in this plan. There are four major efforts related to this process: (1) Component identification (commissioning database), (2) checklist preparations (construction turnover checklist), (3) test instruction development, and (4) conduct of testing. These four efforts integrate the efforts of various organizations and focus these efforts into an approach that coordinates the completion of the requirements identified to ensure that the systems are ready to be utilized in IWTU operations as designed. Figure 4 is a simplified diagram illustrating the interrelationship of these activities.

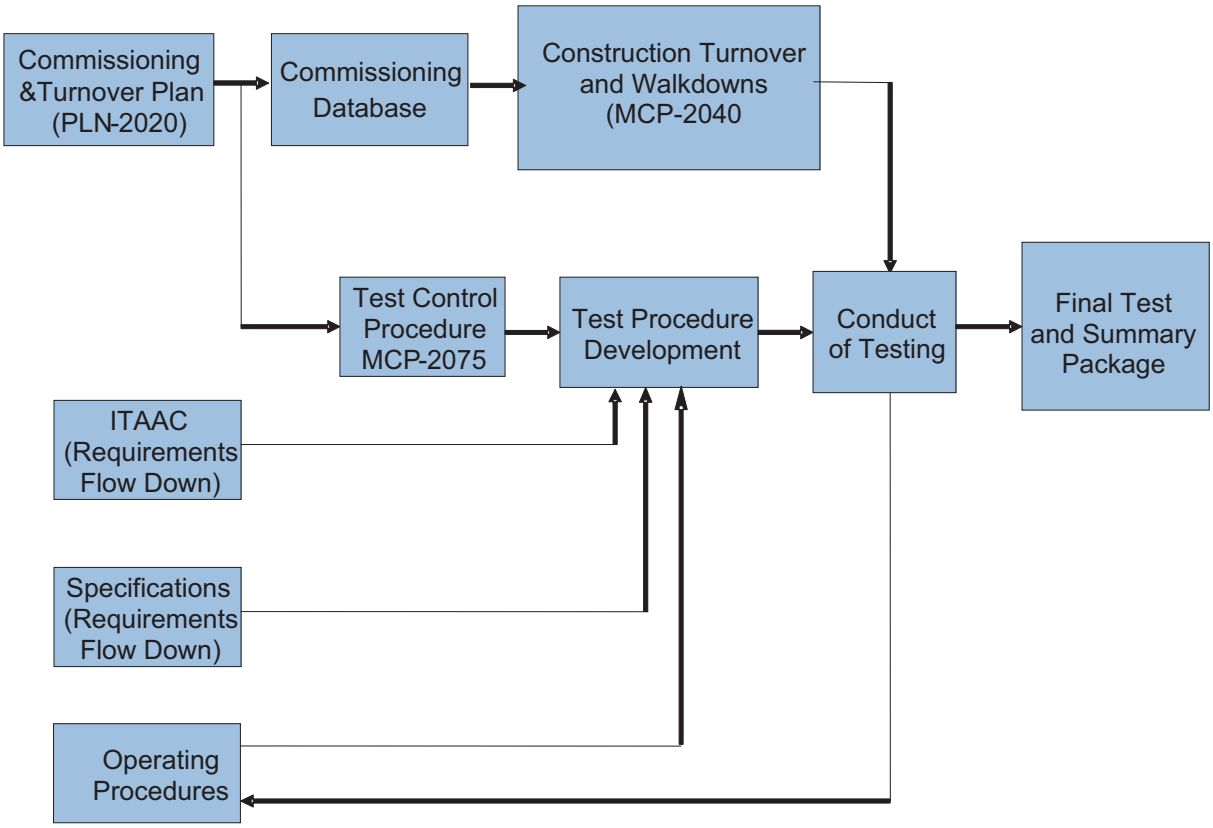

Figure 4. Interrelationship of commissioning activities.

3.7.1 Equipment Commissioning Group (ECG)

As Construction completes the installation of a system as identified by the turnover boundary, it will turn over to ECG to commence testing. This will provide for a phased turnover of the systems so ECG can test the systems in a specific sequence based on systems that are required to be tested prior to testing additional systems. Consequently, there will be construction and testing activities proceeding concurrently throughout a significant portion of the commissioning phase of the project. URSC and ECG will coordinate scheduling of planned activities and schedule updates if needed through the POD; each will maintain their respective activities on the project schedule. In addition, when problems with systems are identified during testing due to construction installation and/or workmanship, see MCP-2040 for resolution of the problem. URSC and ECG will require frequent communications to coordinate these activities during the testing process. ECG will interface with the Construction superintendent or designee during these activities to provide for a single point of contact to help resolve problems and scheduling issues. The Construction superintendent will:

- Help identify scheduling conflicts between URSC and ECG
- Consult with ECG on other issues as needed
- Coordinate activities between both organizations to minimize one organization interfering with the other
- Review the test boundaries that have been establish by ECG and provide the require direction to construction craft that construction will not do any construction work on systems that have be jurisdictionally transferred and controlled by ECG and tagged to show the boundary per MCP-2040.

The ECG manager or a test director will provide key interface between the ECG organization and URSC for test and turnover activities. The ECG manager or test director will perform the following:

- Provide coordination and implementation of MCP-2040 and URS-WD 1P-7.0, "Turnover Plan," for USRC turnover of the systems
- Provide direction and oversight of the commissioning activities and ensure testing is controlled per MCP-2075
- Ensure the proper number of qualified personnel is available for commissioning activities, that all prerequisites are met prior to component and system tests, and that problems are identified and corrected during commissioning activities per MCP-2075
- Coordinate with URSC on completed work scope for turnovers of individual systems from URSC Construction to ECG
- Coordinate with Construction on jurisdictional control of systems and ensure proper tagging of the equipment/systems has been completed per MCP-2040
- Review URSC's component checkout testing data to ensure that it is complete and acceptable for turnover per MCP-2040
- Coordinate with Construction on system turnover sequencing
- Coordinate between URSC and ECG pre-turnover walkdowns per MCP-2040
- Coordinate between URSC and ECG on final turnover walkdowns per MCP-2040

- Coordinate identification and resolution of A and B punch-list items per MCP-2040
- Coordinate turnover package identification, data location, and transfer to CWI per MCP-2040
- Coordinate turnback to construction tracking per MCP-2040
- Coordinate repair or replacement of defective equipment or components per MCP-2040
- Coordinate between Construction and CWI Life Safety Systems during the installation and testing of the IWTU fire alarm system to the Idaho National Laboratory (INL) Fire Alarm Center
- Coordinate between Construction and INTEC Plant Operations for the hookup and services of the required utilities to support the IWTU Project.

3.7.2 Test Teams

Utilizing personnel from the project organizations, commissioning teams will be organized to conduct the testing. IWTU Operations, Design Authority, and ECG have assigned systems or subsystems to specific personnel with additional support as required by IWTU QA. The size and makeup of the test team will be determined by the rigor and type of testing being performed, the complexity of the tests being conducted, and the size of the system or subsystem being tested.

A test director and one or more ECG engineers and IWTU operators will be responsible for organizing, preparing, and conducting the component and system testing. This will include preparation of test directives and test instructions, procuring needed materials or services, and ensuring that the proper number of personnel is present to conduct the tests and the required *measuring and test equipment (M&TE;* see def.*)* needed to conduct the test has been calibrated as required and has been staged and available for use.

During test performance, the test director is responsible for ensuring safe work practices by performing prejob briefings, attending the plan of the day to coordinate daily activities with Construction, providing oversight and compliance to the test procedure, obtaining required test data, identifying and planning necessary test modifications or corrective actions, reviewing and certifying test results, and obtaining final approval of the completed test and summary package per MCP-2075.

Expertise in the testing process will be provided as needed by consultants that are experts in the process of the IWTU, such as THOR Treatment Technologies (TTT). TTT engineers will be qualified and assigned as ECG test engineers for testing of the steam reformer portion of the process systems. Likewise, the Design Authority engineers who have participated in the Hazen Research facility testing, and participated in the design and procurement of the equipment, may be qualified and assigned as ECG test engineers as required during the commissioning phase.

Test teams will include personnel experienced in nuclear operations and personnel experienced in INL and INTEC policies and procedures. Operations and ECG personnel will be required to go through IWTU-specific training. This training is described in PLN-3038.

3.7.3 Commissioning Database

One of the key preliminary steps in preparing for testing of the IWTU process is the development of a commissioning database that identifies the equipment, components, and instruments that are required by the design to treat and store the sodium-bearing waste. This database will be generated by combining two existing databases, namely the instrument database and the process equipment list (PEL). These two databases are maintained by IWTU systems engineers. The component and instrument databases are maintained as described in PLN-2907 and PLN-3436, The combination of these two databases will become the master equipment list. The instrument database contains information about all IWTU instruments. This information is used to ensure accurate installation, configuration, and use of each instrument. The PEL contains information about all IWTU equipment, but does not contain the data required to configure the DCS. These two sources of information are synchronized to ensure accuracy between the two databases.

System engineers enter data into this database to define the system boundaries and the instruments and equipment within the boundary.

The PEL and the instrument database are broken down to the system level to populate the commissioning database.

This database will be as a guide for the ECG engineers as they organize their activities and ensure that all components and instrumentation are included within the indentified boundary to support walkdowns, and preparation of the test directives and test instructions.

3.7.4 Preparing Checklists

As a guide in walking down and turning over systems to other organizations, checklists will be prepared. The directions for preparing these checklists are found in MCP-2040.

The walkdown checklist lists the instruments and components that a located within the system boundary along with the indentified ITAAC and specification requirements. The checklist provides the information needed to ensure that all instrumentation and components have been installed and labeled. This will be verified during the system walkdown. The system walkdown also provides a mechanism for indentifying and recording defects per MCP-2040. The turnover package checklist identifies all items that must be included in the turnover package to ECG.

3.7.5 Test Instruction Development

Test directives and test instructions provide the structure to ensure compliance to the design requirements to ensure acceptability of the systems at the completion of the testing. The test directives and test instructions will identify the hazards and provide mitigation to those hazards. Documents used to perform system and component testing will be prepared using the STD-101 work order process or MCP-135 technical procedure process. Documents used to perform integrated plant testing will be developed and executed in accordance with MCP-2075. These test documents provide the rigor and structure during the testing process that is necessary to prove that the system meet the design requirements and the intended function.

Identification of Testing Requirements

Procedures and instructions will be developed for each test using three sources of testing requirements: (1) Vendor data, which includes instructions for preparing the equipment for operation and for starting up the equipment, (2) standard practices for testing of equipment, and (3) facility documents that set requirements for the plant (such as, design documents, engineering and equipment specifications, safety analysis, and environmental permits and regulations).

There are multiple sources of requirements that must be met to accomplish the verification of design requirements and functionality of the equipment and processes. These sources have been developed and facilitated to assist in identifying within the test procedures the basis for the test requirements. The first source is identified as the specifications roll-down database and the second is identified as the ITAAC. The

ITAAC process was instituted at IWTU to facilitate gathering information from numerous facility documents. ITAAC is a systematic approach to identifying requirements IWTU must meet. This process is directed by Operations, but includes personnel from the Design Authority, QA and ECG organizations. Documents that control the ITAAC process are:

- CTR-257, "IWTU Inspections, Tests, Analyses, and Acceptance Criteria (ITAAC) Working Group Charter"
- PLN-2909, "IWTU Inspections, Tests, Analyses, and Acceptance Criteria (ITAAC) Program Plan"
- MCP-2049, "IWTU Inspections, Tests, Analyses, and Acceptance Criteria (ITAAC) Program."

The specification rolldown process is defined in PLN-3692, "Plan for Specification Rolldown Process."

Basis for Test Instruction

After the testing requirements are identified, test procedures are developed. In general, manufacturers' instructions and procedures will be used for factory acceptance tests, URSC CC test (as stated in 3.3.4), component checkouts, and component testing. Manufacturers' test procedures may also be used when the testing is done by the manufacturer either at their shop or after the equipment is installed at IWTU. In a few cases, the required testing is specialized and requires specialized expertise or M&TE. In these cases, subcontractors may be hired to complete the required testing under the direction of URSC or ECG. The subcontractor will submit their test plan or procedure for review and approval by URSC and/or IWTU system engineers prior to testing activities to ensure that the necessary requirements and acceptance criteria have been identified and addressed with the subcontractor test plan or procedure, and that the data collected will be acceptable for turnover of the system. These documents may be reviewed and approved by the JTG as appropriate per MCP-2075.

Instructions for system testing, integrated testing, and the SPT will be based on operating procedures (TPR) developed by the Operations Department to the extent practical. Where practical, the system will actually be operated using operations procedures. Using operating procedures to develop test procedures will allow the operating procedures to be verified and validated while the equipment is tested. Operations procedure validation will be performed in accordance with the instructions in MCP-135. The operations procedures will be in

limited field use status during testing. When operations TPRs are not practical for use as the test procedure, then the test procedures will be developed as part of an ICP work order, which will follow the requirements of STD-101 per MCP-2075.

Work Control Expectations for Test Procedures

As previously stated, test procedures will be developed in accordance with MCP-2075. This procedure outlines topics that will be included in test procedures, such as:

- Identification of equipment to be tested
- Test objectives
- Acceptance criteria
- Scope of the test
- Precautions (safety hazards and mitigating steps)
- Prerequisites
- Identification of M&TE
- Identification of temporary changes to the system configuration
- Testing steps and directions
- Data collection
- Test approval
- Identification and resolution of all test deficiencies and nonconformances
- Documentation of removal of temporary modifications utilized to perform tests
- Proof and objective evidence that testing is complete.

MCP-2075 also requires that test instructions be reviewed by cognizant personnel and the JTG to ensure they meet the design and operating requirements prior to turnover to IWTU Operations. The JTG Chairman determines whether a test instruction requires a full JTG review or will be review by a single member.

3.7.6 Conduct of Testing

Component checkouts carried out by Construction will be controlled with URSC CWCPs, either as part of the installation CWCP or as a separate CWCP prepared specifically for the component checkout. The

construction CWCP process is defined in URS-WD Manual 2, *Construction Program*, Procedure 2A-2.0, "Construction Work Control Process."

Commissioning will be done as specified in MCP-2075, using either the work order process per STD-101 or the TPR process per MCP-135.

Component Lineups to Support Tests and Turnover

Component lineups are addressed by the test instructions. A pretest lineup is developed to ensure the system is properly configured to support the test. A post test lineup is included to align the system to the proper end state. This end state can align the system for subsequent testing or for system shutdown. The overall intent is to align the systems at the end of testing to allow for a smooth transition to the operations TPRs. These lineups will be reviewed and approved by the IWTU Operations as part of the test instruction development. IWTU Operations in support of ECG will perform all system lineups during the commissioning of the components and systems. This will allow for the rigor necessary that is required by DOE Order 5480.19, "Conduct of Operations," but will also provide valuable experience to Operations personnel during the phase of the project.

Control of Temporary Modifications

A graded approach to temporary modifications will be employed during component and system testing, the *work control document* (see def; test procedure) will identify and control the installation temporary modifications needed for conducting the test. The work control document will specify the modification for the test, and control the restoration back to the proper configuration once the test is complete. If during testing it is found that additional temporary modifications are needed, then these temporary modifications will be controlled in accordance with MCP-2075 and MCP-2230, "IWTU Temporary Modification Control," and will be approved by the Design Authority.

During integrated testing and the SPT, the same test control will still be in effect that was employed during system testing, MCP-2075 and MCP-2230, to control the process for tracking and closure of issues and the use of temporary modifications.

Supplies, Special Tools, and Services

Once the utilities systems have been tested and made ready for operation, these utilities will be used in the testing of other components, subsystems, and systems as well as during integrated testing and the SPT.

Materials and supplies of the following items will be needed for testing. It will be the responsibility of ECG to make sure the following material and supplies are procured and available when needed for testing:

- Granular alumina will be needed for testing the fluidized beds, solids transfer, product loadout, canister fill system, and sample system. (A fluorescent powder will be mixed with the granular alumina to demonstrate the effectiveness of seals for contamination prevention in the canister fill system.)
- Fine alumina material will be needed to test fines removal from filters.
- Sacrificial plugs will be used to test installation of canister plugs.
- Calibration gases will be needed to calibrate gas monitors.
- An appropriate test agent will be needed to verify high-efficiency particulate air (HEPA) particle removal efficiency.
- Swipes will be used to show that product loadout surfaces can be swiped to measure for contamination.
- It is anticipated that replacement filters will be needed for the radiation monitoring system (RMS) following component testing.
- Simulant (e.g., Alumina during Hot N2 Testing) may be used during integrated testing, the preliminary SPT, and the SPT.
- Canisters will be needed to collect product generated during testing.
- One canister vault will be needed for testing.

M&TE that will be needed for equipment testing and instrument calibration will be controlled by MCP-2391, "Control of Measuring and Test Equipment," as required. It is also the responsibility of the test director to ensure that this material and equipment is staged and available when needed.

3.8 Equipment Commissioning Activities

There are other activities, in addition to testing, that ECG is either responsible for or with which they will assist the responsible organization.

3.8.1 Mockup Testing

Prior to, or during installation, testing will be done on some of the unique elements of the IWTU process. These elements are new designs or concepts and have never been tested or proven during actual operations.

Auger/Grinder Mockup

A mockup will be made of the denitration mineralization reformer (DMR) and a solids pneumatic transport loop. The mockup will be assembled at a subcontractor's facility and testing will be accomplished by the subcontractor's personnel. An ECG or DA engineer will prepare the test description and will witness all testing. The auger/grinder will be attached to the solids outlet on the DMR mockup and the discharge of the auger/grinder will be attached to the solids pneumatic transport loop. This setup will allow the auger/grinder and solids transport system to be tested in one set of tests. More specifically, the auger/grinder will be tested to demonstrate that it will effectively grind process waste that may discharge in large, solid chunks that are generated in the DMR.

Additionally, the auger/grinder will be tested to verify that the clearances of all internal, moving parts are sufficient to allow the grinder shaft to turn when the unit is heated up to operating temperature. In other words, this test is intended to determine whether or not the internal components, which are subject to high temperature, will grow from thermal expansion more than the external components that are exposed to ambient conditions and will not be as hot and therefore will not grow as much from thermal expansion. Lastly, the auger/grinder will be checked for excess wear from erosion by the solid waste DMR product.

Solids Pneumatic Transport Mockup

As indicated above, the solids discharge from the auger/grinder in the auger/grinder mockup and are connected to a pneumatic loop. The purpose of this mockup is to verify that the unique block valves and block fittings used in the IWTU product transfer system will not result in plugging the transport lines. This testing will be done simultaneously with the auger/grinder mockup and will also include looking for indication of excessive erosion at the end of the testing.

The overall project strategy for development and testing of the IWTU remote capabilities is outlined in PLN-3491, "Mockup and Prototype Testing Plan." Additionally, acceptance criteria is defined in the ITAAC program. The following are examples of items addressed:

Maintenance activities that will require remote capabilities include:

- Process-gas filter (PGF) element changeout
- Off-gas filter (OGF) element changeout
- DMR equipment changeout, which includes the auger/grinder, fluidizing gas and waste fed nozzles, instrument nozzles and cyclone rod changeout
- Waste feed pump changeout
- Valve maintenance.

To accomplish these tasks, a suite of remote tools are used to accomplish the required remote activities. These tools require checkout and testing as part of the development process. In order to test and evaluate the remote tools and the procedures to be used, remote maintenance mockup tests will be conducted. The mockup design will be provide by IWTU Engineering and will provide the necessary interfaces to simulate the conditions needed to test and checkout the remote tools for the required maintenance activities. The maintenance activities are:

- Removal/installation of the DMR auger/grinder
- PGF eductor installation and removal
- PGF/OGF filter vessel head bolt installation and removal.

Some of the remote tools will be tested and checked out in a mockup stand that is located in the robotics lab at CPP-1662. Functional tests will be performed by trained and qualified IWTU operators on the prototype tools using the different mockup and simulated tests. The objectives of these functional tests will be to verify and record the operability of remote maintenance tool prototypes. The IWTU Engineering group that will design these tools will define the functional testing that will be performed. An ECG or DA engineer will write the test procedures and assist as necessary in conducting the tests. Performance, suggested modifications, and acceptance of the remote maintenance tools used for the various mockups will be documented in test procedures developed by the test engineer. Data collected during the functional tests, along with lessons learned, will allow modifications to be made to the prototype tools and procedures for the remote demonstrations of the tools.

Using the as-built prototype, the following demonstrations will be performed following the testing of the prototype and finished remote tools:

- PGF eductor changeout remote demo
- DMR auger/grinder remote demo
- Waste feed pump remote demo
- Remote valves maintenance demo
- DMR fluidizing gas and waste fed nozzle remote demo.

The final version of the remote tools will be turned over to IWTU Operations at the completion of mockup testing. The mockup test setups will also be turned over to Operations for use as maintenance training tools during IWTU production runs. The remote tools will also be used by Operations personnel during the commissioning phase to demonstrate the use of the tools on the intended systems within the IWTU facility to verify the tools meet the intended use and also validate the TPRs and operator training.

3.8.2 Factory Acceptance Testing

Many of the *systems and subsystems* (see def.) that make up IWTU are fabricated off the INL Site. Some of these systems or subsystems are one-of-a-kind and have not been used before. Others are standard products and have been used at other facilities. Equipment vendors will perform factory acceptance tests to demonstrate that the equipment complies with the designated procurement specifications. Some of these tests may actually be performed on-site such as the testing and balancing of the heating, ventilating, and air conditioning (HVAC) systems, fire protection and the power distribution center (PDC).

Test procedures and documentation are submitted by the vendor for review and approval prior to testing. The completed test results will be submitted to the ECG for review in accordance with the procurement contracts. The Design Authority and/or ECG may witness selected vendor tests. In general, the tests selected for observation should be those tests considered essential to demonstrate the adequacy of the equipment to support the process design. These tests may be used to in lieu of component testing. In these cases, the specification rolldown item that evaluated the vendor testing will be listed in the test instruction prerequisites to ensure it has been properly reviewed and approved (e.g., Status A, B or C per MCP 3573) prior to testing.

3.8.3 Construction Component (CC) Checkout

The CC checkouts will be the responsibility of URSC Construction and will be used to verify that all components were installed correctly. Component checkouts will include visual inspections, functional checks

for alignment of mechanical systems and testing of components. Construction will prepare component checkout procedures or instructions and the ECG or DA will review these procedures or instructions to ensure that the testing meets the applicable requirements and that the necessary data is collected and recorded.

Any problems identified during component checkouts will be corrected by Construction and the inspection or test will be repeated as required. At the discretion of ECG, the test engineer that is responsible for testing the system may witness the component checkout. All component checkouts for a system must be completed prior to the final walkdown per MCP-2040. At the time of the final walkdown, Construction will provide the turnover package with the required documentation that demonstrates all component checkouts were completed and that all the components have been installed correctly. The required CWI organizations will review and approve that the component checkouts are acceptable and adequately documented prior to turnover to ECG per MCP-2040.

Component checkouts will include but not limited to:

- Megger checks
- Point-to-point/continuity checks
- Functionality of electrical components
- Powering up electrical components to verify they function
- Verify motor rotation is in the correct direction
- Verify pump rotation is in the correct direction
- Verification that actuators work properly
- Valves, dampers, and doors open/close
- Verification that limit/proximity switches work properly
- Verification that piping components are installed in the proper location
- Inspection of components with directional flow to verify flow is in the proper direction
- Activating hydraulic and pneumatic components to verify they function

- Leak/hydro tests (i.e., pneumatic or hydraulic)
- Functional and load testing the cranes
- Functional checks for interface alignment of mechanical systems.

The above listed items may also be accomplished by CWI Force Account using a STD-101 work package.

3.8.4 Turnover from Construction

A subsystem or system will be turned over from URSC to ECG upon successful completion of CC checkouts, inspections, and walkdowns for the subsystem or system. Prior to turnover, a turnover package will be assembled by Construction and provided to ECG per MCP-2040. The turnover package will contain all of the documentation identified in the turnover checklist.

Per MCP-2040, the Operations manager, ECG manager, Design Authority and the URSC manager will approve the turnover package checklist prior to use and will sign off the checklist after all items to be included in the turnover package have been provided to ECG. In addition, representatives from the IWTU organizations that include Operations, Design Authority, QA, and ES&H will review the turnover checklist and sign off the checklist after they have verified that the documentation required by the turnover checklist is included.

In some instances, it may be necessary or desirable to turnover a portion of a system or subsystem. A partial turnover is allowed in this process.

As a system is turned over to ECG, the system will be tagged, as described in MCP-2040, indicating the system is under ECG jurisdictional control.

3.8.5 ECG Component Testing

Component testing is the responsibility of the ECG and will be conducted after turnover of a system or subsystem from URSC. Component testing will not generally be a repeat of component checkouts already conducted by Construction except in unusual circumstances such as those systems used for beneficial occupancy for construction. Examples of these systems are the maintenance crane, steam and condensate for building heat, and utility systems used by construction to aid in the construction activities. However, if any of the component checkouts described in Section 3.4.3 cannot be done by Construction, they will be done as a component test by the ECG. In this phase of the testing process, components that require preparation before

operation will be set up as necessary. This will include but is not limited to inputting set points, calibrating sensors, and tuning controllers. The testing done after component preparation will be used to demonstrate that equipment is configured and performs in accordance with design documents, and that all equipment is ready for operation.

Component testing involves verifying the following items:

- Components have been calibrated as required
- Instruments and sensors work properly
- Control devices properly respond to signals (i.e., actuators travel in the right direction and with the right amount of travel)
- Interlocks are activated
- Utilities are available in the required capacity and can be isolated and accessed
- Pump and blower outputs match performance curves.

Each system will be assigned to an ECG (test) engineer. It is the responsibility of the test engineer to identify the testing that is needed, plan the testing, prepare procedures for the testing, schedule needed support from Operations, and Craft personnel, and verify that the required M&TE is available, functional, and calibrated.

3.8.6 System Operability Testing

System testing will be done after all components in a system have been successfully tested. There are three primary goals of system testing. These are to verify that all components work together as a system, that the system operates as intended, and that the design is adequate. For example, testing will be done to verify that proper fluid flows can be established throughout a system, that solids can be moved through the additive feed system, that the DMR and carbon reduction reformer (CRR) beds will fluidize, that fluidizing gas is heated as designed, that solids can be pneumatically transferred and collected, and that all monitoring systems perform as required.

While this testing is conducted, it will also be necessary to continue to tune the process controllers, and the DCS logic for each system will be checked out and modified per PLN-576, "DCS Configuration Management Plan," as needed. This testing will be the responsibility of ECG, which will plan and coordinate all testing activities. In general, the test engineer responsible for a system during component testing will be

responsible for the same system during system testing. The test engineers will write the test plans and procedures and will direct the commissioning activities. Operations personnel will support commissioning during the conduct of these tests. This will provide Operations personnel on-the-job training on these systems.

Testing will be done on subsystems and/or systems, depending on the complexity of the subsystem and system. In some cases, if the subsystem or system is not complicated, component testing and system testing will be combined into one test. Specific acceptance criteria for system tests, including functional tests and integrated systems tests, will be provided by Design Authority and specified in the test procedures prepared by ECG. Acceptance criteria will be based on the requirements of design outputs, TFR-349, "Technical and Functional Requirements for the Integrated Waste Treatment Unit," the ITAAC process, approved system design description documents, engineering and equipment specifications, and vendor manuals.

Acceptance criteria will be based on the following general guidelines:

- Systems must satisfy the system and component functional performance requirements specified in the system design descriptions.

- Calibration of instruments, gauges, and equipment requiring calibration are calibrated per MCP-6303, "Calibration of Installed Facility Process and Control Instrumentation," to the tolerances specified in the governing engineering design documentation. The frequency will be established by the system engineering organization with the agreement of Operations and Maintenance, and that the calibration data will be entered into the Passport tracking system for the calibration cycles.

- All CC checkouts were completed satisfactorily (no unresolved deficiencies) and all punch-list items remaining have been review for impacts to testing.

- Safety systems and interlocks function as designed.

3.8.7 System Turnover to Operations

Each system will be turned over to IWTU Operations for the training of Operations and Maintenance personnel for the activities that are performed at the completion of testing. Turnover to Operations will be conducted as specified in MCP-2040. ECG will prepare a final test and summary package that provide the documentation that was provided by

construction to ECG for turnover and all commissioning documentation that was generated during the component and system tests. This will include copies of all test results, component calibration data, as-built drawings, and supporting information. Discrepancies will be resolved to the satisfaction of the JTG prior to turnover. Equipment configuration at the time of turnover will be specified in a baseline configuration form and controlled by the IWTU Operations Supervisor.

3.8.8 Facility/Building Turnover

A walkdown will be conducted on the civil, structural and architectural elements of the IWTU facility and punch-list items developed and processed in accordance with MCP-2040.

This will be controlled under the same process as system turnovers per MCP-2040.

3.9 Acceptance Testing

3.9.1 Integrated Testing

Integrated testing will be conducted to demonstrate that all systems work together as an integrated process. ECG will plan and coordinate this testing and will prepare test instructions that will corresponded to the IWTU TPRs. IWTU Operations will operate the process systems under normal conditions during the integrated tests using the TPRs. ECG test procedures will be used to collect the data and record system perimeters under normal IWTU operations and will also define and implement additional perimeters and test conditions that will be used to refine the process conditions.

In order to operate the process to achieve these conditions, the TPRs and the ECG test procedures will have to be used in parallel, or at specific points within their TPR Operations will have to step out of the TPR and refer to the test instructions and perform the required steps in the test instructions. Once those steps are complete for testing of the additional perimeters, the ECG test procedures will direct operations back to the required step in their TPR to resume normal operation of the process system. This may be done several times during the integrated testing of the IWTU system.

It is anticipated that the documented safety analysis (DSA) for IWTU will be in place and implemented prior to the hot nitrogen demonstration. Tests performed after DSA implementation will require additional approvals for this phase of the tests as required by the DSA and the technical safety requirements (TSRs) as defined in the implementation plan.

3.9.2 Hot Nitrogen Testing

Hot Nitrogen testing will be performed as part of CD-3, prior to the MSA. The use of nitrogen allows the plant to be tested in an integrated manner, without the use of chemical or radiological material that require DSA controls. The use of nitrogen will allow tuning process control loops and allow the operator to gain the necessary proficiency with the process to prepare for the MSA and ORRs. Following completion of the Hot Nitrogen Integrated Test, the systems will be turned over to IWTU Operations for demonstration runs and for conduct of the MSA and ORRs.

Water Feed

Additional integrated testing will be conducted post CD-4 following the Federal ORR using water as the feed. The use of water feed will allow testing of the process, but with lower risk and without the complications of radiological constituents, which makes any needed equipment modifications or repairs much simpler. Introduction of water feed into the process will result in fluctuations in temperatures and pressures and will allow a complete test of the control system. Operations using water feed will continue during the system shakedown period. This will include debugging the process and fine tuning the control system.

3.9.3 System Performance Test

IWTU is regulated under the Clean Air Act and the Resource Conservation and Recovery Act (RCRA). As codified, these environmental statutes, as well as the facility environmental permits, regulate emissions from IWTU. More specifically, there is a requirement to show effective destruction of any hazardous organic species that may be in the waste feed. Because IWTU has been permitted as a Miscellaneous Treatment Unit, as defined in RCRA, the actual performance requirement for organics destruction is not defined in the regulations. Rather, the regulations stipulate that the performance requirement is to be developed by the permittee and the regulatory agency that is responsible for permitting the process, in this case DEQ.

As a part of obtaining permits under RCRA, IWTU will have to demonstrate that the public is not at risk from facility emissions. This test will use mixed waste from the INTEC tank farm to verify that the IWTU is functioning as designed. The data collected during the SPT will be used to set operating parameters that are protective of human health and the environment and to validate the IWTU risk assessment previously submitted to DEQ.

After the preliminary test has been completed and the process has been demonstrated to be acceptable, the SPT will be conducted as required by PLN-3298. Samples will be collected that include the solid residue produced by the process, and all effluent samples.

To provide the quality assurance required in the SPT, duplicates of all samples will be collected and blanks will also be prepared and submitted for analysis.

Upon completion of the SPT, two reports will be prepared by the planning subcontractor that documents the results of SPT. The first report is for the emissions of nitrogen oxides that are measured (and this data will be immediately available). A report will be prepared and submitted to DEQ detailing the emissions of nitrogen oxides within 30 days of completing the test, as required by the regulation. The test report for the remaining portion of the testing will be prepared submitted to DEQ within 90 days of completing the test as required by the regulation. After the SPT is completed, the IWTU process, with approval of DEQ, can be operated at a reduced feed rate as stated in the SPT plan until the DEQ approves the report.

3.10 Testing Closeout

At the successful conclusion of the SPT, there are a few additional steps that ECG must complete to close out testing activities.

3.10.1 Equipment Configuration

At the conclusion of the SPT, all debris from testing activities will be collected and the facility will be left in a clean condition. Temporary equipment and connections will be removed (e.g., special equipment for metering the feed into the process). Lastly, some equipment that was specifically set up for the SPT will be returned to the configuration specified on the baseline configuration forms. If temporary modifications were install to support the SPT or other integrated tests, either by test procedure steps or MCP-2075 those will be removed and the system will be restored to re-establish system configuration per MCP-2075.

3.10.2 Test Documentation

All ECG tests will be formally documented, reviewed, and approved by the ECG manager and submitted to the JTG as the test and summary report as defined in MCP-2040. Vendors and subcontractors will provide submittals as required by the subcontract vendor data schedule. These submittals will contain the vendor tests plans and test reports to show acceptance of the required testing completed by the vendor or

subcontractor. These submittals will be reviewed and approved by the required IWTU and CWI organizations. Copies of the approved test reports will be provided to ECG as specified in the procurement specifications. ECG will also review and approve all construction acceptance tests as defined in MCP-2040. Vendor/subcontractor completed acceptance tests that are performed after the installation of the system in the IWTU facility during construction will be submitted and managed in accordance with MCP-3573. Vendor documentation that is used to satisfy ITAAC and specification rolldown requirements will be collected and maintained in system files as described in MCP-2049 and PLN-3692. These files will be used to demonstrate compliance with established requirements and other applicable design and performance specifications.

The ECG will maintain system test files which will include a record of all deficiencies identified during ECG testing, as well as a record of how these deficiencies were dispositioned per MCP-2075. These records are to be reviewed and placed into EDMS as a permanent record at the completion of each test. Likewise, turnover packages are to be reviewed and be retained by the ECG to be used as part of the required documentation for the final test and summary package. However, as part of the testing closeout and turnover to Operations, the test and summary reports will be presented to the JTG per MCP-2075. The test and summary report and the turnover package will be submitted to Technical Document Control for retention as records per MCP-557, "Records Management."

3.10.3 Secondary Waste Disposal

Secondary wastes expected to be generated during the SPT may include the following:

- Personal protective equipment
- Housekeeping debris from sampling and operations.

Waste Generator Services (WGS) provides the expertise necessary for setting up accumulation areas, packaging, and disposal of the secondary wastes. WGS will be notified well in advance of the generation of the secondary waste so that they can prepare paperwork and a disposal route. At the completion of the SPT, any excess simulants and test-treatment product produced during testing will be turned over to WGS along with any contaminated debris or personal protective equipment for proper treatment and disposal.

3.10.4 Preparation of the Final Test and Summary Report (FTSR)

At the completion of the component, system, and integrated testing activities, a final report will be prepared documenting testing completed and the testing results. This report will be the final step in the testing and commissioning of the IWTU facility. The FTSR is used as input to the closure of ECG testing requirements in the ITAAC and specification rolldown tables. FTSR are prepared as described in MCP-2075.

4. TRANSITION TO OPERATIONS

4.1 Operations Preparations and Authorization to Start Up

This phase contains all the major activities that Operations needs to complete prior to the start of the MSA. It should be noted that many of these activities do not need to wait for the completion of the construction and commissioning phases, and in fact, some of these activities are already underway. The activities described below should be commenced as soon as possible, and worked in parallel with construction and equipment commissioning activities to the extent practical. To compensate for the risks inherent in this parallel/accelerated approach, final checks to make sure all activities are complete and all documentation is in order and readily retrievable should be made prior to affirming readiness.

Prior to the MSA, all documentation and preparations necessary to conduct full nuclear operations must be complete and in place per PLN-3588. This section provides a brief description of some of the key documents and preparations that must be completed.

4.1.1 Final DSA and TSR

As part of the transition to full operations, the preliminary DSA and TSR must be transitioned to a final DSA and TSR that will be used to govern nuclear operations. The DSA/TSR will be developed, reviewed, approved by CWI, and submitted to Department of Energy Idaho Operations Office (DOE-ID) for review and approval. Upon resolution of DOE-ID comments, DOE-ID will issue a safety evaluation report to approve the final DSA and TSR. Once approved, the DSA and TSR will have to be implemented such that: (1) the required project documents must be in place and validated that satisfy the requirements set forth by the DSA, and (2) the TSRs have been identified and the required mitigations have been incorporated into procedures and operations round sheets and surveillances. Once the DSA and the TSRs have been approved, the unreviewed safety question (USQ) process will apply to all IWTU design changes, and to any new documents or work orders that will be generated to support IWTU operations.

4.1.2 Procedures

Operating and maintenance procedures will be developed and validated in the facility. Refinement of these procedures, and development of new procedures, will continue throughout the startup process. The procedure development process will include validation of procedures, application of the USQ process, and training on the procedures.

4.1.3 Training

Training program development and implementation is underway. The implementation of PLN-3038 will culminate in the qualification of test engineers, operators and supervisors, and the confirmation of adequate training of support personnel.

4.1.4 Integrated and Hot Nitrogen Testing and Procedures

During this phase, preparations will also be made for the performance of integrated and hot nitrogen system testing and demonstrations to be conducted during the MSA and the ORRs. Procedures governing these tests will make use of operating procedures to the maximum extent practical.

4.1.5 Documents Requiring DOE-ID Approval

The IWTU Project will also develop a number of documents that require DOE-ID approval. These documents include: the conduct of operations applicability matrix, the training implementation matrix, and the maintenance IP. IWTU will develop these documents, process them through the CWI review and approval process, and submit them to DOE-ID for approval.

DOE will also review the corrective action plans and closure evidence files associated with the DOE ORR findings, as well as closure of any items on previous manageable lists of open items. Upon final approval, the SAA will issue the authorization to start up nuclear operations and issue the signed nuclear operations authorization agreement.

4.1.6 Quality Assurance Plan

The CWI QA Program consists of systems used to manage, perform, and assess work including activities assigned to external organizations. Program requirements are contained in Manual 13. The CWI QA Program is based primarily on 10 CFR 830, Subpart A, “Quality Assurance Requirements”; DOE O 413.3A; and DOE O 414.1C, “Quality Assurance.” 10 CFR 830, Subpart A, provides QA requirements

for managing nuclear facilities. DOE O 413.3A provides project management requirements for major projects. DOE O 414.1C provides QA requirements for managing nuclear and nonnuclear facilities. Additional source documents include ASME NQA-1, Edition 2008 and DOE and industry standards.

PLN-2038, "Quality Program Plan for the Integrated Waste Treatment Unit Project," defines the specific QA criteria to be implemented by the IWTU Project. The IWTU Project uses the Quality Assurance Program for the ICP described in Company Manual 13, *Quality Assurance Program*, as the implementing mechanism for this quality program plan (QPP). This QPP conforms to ICP Contract Section H.14, "Quality Assurance Program" (DOE-ID 2005), and the CWI QA Program, and has been developed to cover project-specific activities. The scope of this QPP includes ICP activities performed in support of the IWTU Project during all phases of the project prior to operation beginning with design and progressing through procurement, fabrication, construction, equipment installation, testing and turnover. An updated plan will be issued for the commissioning of IWTU to address startup and operation of the facility.

4.1.7 Environmental Management System

A subcontractor is in place to provide the independent Idaho registered Professional Engineer certification as required by RCRA for the construction phase of the IWTU Project. This certification will include but not be limited to applicable sections of 40 CFR 264, Subpart J, "Tank Systems," and Subpart I, "Use and Management of Containers."

All as-built essential drawings need to be certified by CWI and DOE and submitted to DEQ no later than 60 days prior to conducting the SPT.

4.1.8 Safety and Health Plan

The health and safety program for the IWTU Project will identify the health and safety requirements and procedures that will be used to identify the hazards and mitigations used to eliminate and minimize risks to personnel performing work and operational tasks. The program will meet the requirements of the Occupational Safety and Health Administration (OSHA) standard. Work control documents associated with IWTU operations will be developed in accordance with STD-101 or MCP-3562, "Hazard Identification Analysis and Control of Operational Activities." The work control documents will roll down applicable safety and health requirements identified in company manuals such as ICP Manual 14A, *Occupational Safety and Fire Protection*, and also ICP Manual 14B, *Occupational Medical and Industrial Hygiene*. The use of

these CWI manuals and the safety and health professionals that will be assigned to support the IWTU Project will define the hazards and the appropriate controls and mitigations base on specific IWTU facility conditions and make the appropriate changes as needed.

4.2 Nuclear Operations Startup and Transition to Unrestricted Hot Operations

4.2.1 Startup Plan

IWTU-Startup Plan, PLN-3350, will control the startup activities of IWTU following the completion of readiness review activities and SAA (or designee) authorization to commence operations. The plan defines the startup process to control facility activities and systems until released for unrestricted operations.

Throughout the readiness preparations, including the determination of equipment operability, procedure viability, and verification that personnel knowledge, skills, and performance are adequate for operations; only hot nitrogen will be involved. No steam, water or actual radiological waste materials or samples will be handled prior to startup authorization.

The plan will be developed using the guidance given in DOE-STD-3006-2010, "Planning and Conduct of Operational Readiness Reviews," and as a phased approach defining acceptance criteria to transition from one phase to the other. This plan describes a deliberate and managed approach to ensure that operations are performed safely and compliantly.

4.2.2 Nuclear Operations Performance

After the SPT is completed as controlled by the Startup Plan, the IWTU process, with approval of DEQ, can be operated at a reduced feed rate until the test results are obtained; the test report is prepared and submitted to DEQ for review and final approval to proceed to operate the process at the maximum feed rate (full capacity operations).

Following receipt of authorization to start up nuclear operations, and receipt of the nuclear authorization agreement, IWTU will commence startup operations under the control of the deliberate nuclear operations startup plan.

4.2.3 Idaho Department of Environmental Quality Permit Approval

Receipt of the ID-DEQ permit approval is a milestone that is a prerequisite for full capacity operations to commence.

4.2.4 Commencement of Full-Capacity Operations

Once the deliberate nuclear operations startup plan has been completed, and ID-DEQ permit approval has been received, IWTU may commence full capacity operations.

5. READINESS PROCESS

The operational readiness activities are described below. These activities consist of the elements utilized to satisfy management and outside organizations that the facility, its processes, and its personnel are capable and ready to begin treatment of the sodium-bearing waste by IWTU Operations.

5.1 Preparations and General Information

5.1.1 Startup Notification Report

The preparation of the startup notification report (SNR) and its prerequisite activities are governed by MCP-2783, "Startup and Restart of Nuclear Facilities." The general sequence is summarized below.

Initial Hazard Identification and Screening for Startup Requirements

The IWTU Project director will prepare MCP-2783, Appendix B, Activity Description, and MCP-2783, Appendix C, Activity Evaluation. The Operational Safety Board (OSB) chairman will convene the OSB to review and evaluate the appendices consistent with the OSB charter CTR-245, "Integrated Waste Treatment Unit Combined Operational Safety Board and Hazard Review Board." The IWTU Project director will provide copies of the completed Appendix B and Appendix C to the nuclear facility startup/restart subject-matter expert.

Readiness Review Project Case File

Because the IWTU is required to undergo an ORR, the IWTU Startup director will establish a readiness review project case file, comprised of both hardcopy documents and electronic files, and maintain it throughout the startup review process, adding to the file the documents listed below, as appropriate, when each step in the process is executed.

- MCP-2783, Appendix B, Activity Description
- MCP-2783, Appendix C, Activity Evaluation
- SNR applicable to IWTU
- SNR approval by DOE

- Plan of action (POA)
- IP
- Readiness to proceed memorandum(s)
- ORR final report(s)
- Closure packages containing prestart finding and/or poststart finding closure or resolution documentation
- Startup approval documentation.

Initial Startup Notification Report

The IWTU Project director will provide input to the CWI SNR submittals based on the information contained in the MCP-2783, Appendix B, and Appendix C that were completed above.

Quarterly Startup Notification Report Updates

Once the initial SNR has been submitted, the IWTU Project director will provide input to the quarterly CWI SNR updates to DOE-ID for approval.

5.1.2 Contractor Operational Readiness Review Plan of Action

The preparation of the CORR POA and its related activities are governed by MCP-2783. The IWTU Project director will develop the CORR POA using DOE-STD-3006-2010 as a guide and will appoint a CORR team leader (CORRTL) with the qualifications for managing and conducting the CORR as described in DOE-STD-3006-2010.

The IWTU Project was not in operation when ICP underwent its ISMS reverification in 2006, but in an effort to reduce the scope of the ORRs, the project will conduct ISMS and safety management program reviews using CWI program owners and DOE SMEs.

5.1.3 Contractor Operational Readiness Review Implementation Plan

When the POA is approved by DOE-HQ, the IWTU Project director will issue the POA to the CORRTL for action. The CORRTL will appoint members to the CORR Team (CORRT) with the qualifications described in DOE-STD-3006-2010. The CORRT will develop the CORR IP based on the approved POA, using DOE-STD-3006-2010, as a guide. The CORRTL will approve the IP, after any comments are dispositioned. The CORRTL will then provide a copy of the IP to DOE-ID for review.

5.1.4 Management Self-Assessment Plan

Development of the MSA plan is governed by MCP-1126, "Performing Management Self-Assessments for Readiness." The MSA Plan will define the requirements for a full MSA, which is required to achieve readiness of a nuclear facility to conduct an ORR.

The IWTU Project director will identify the MSA lead and at least one MSA team member who are independent of the IWTU Project.

The MSA lead will develop the MSA plan ensuring that the MSA plan fully addresses all of the MCRs, criteria, and prerequisites defined in the POA, including those related to the IWTU-specific ISMS Phase 2 verification criteria, either (1) by being covered by one or more existing MCP-1126, Appendix A criteria, or (2) by the addition of new or modified criteria.

The IWTU Startup director and IWTU Operations Manager will review and comment on the MSA plan in order to ensure that the specified criteria are adequate to achieve readiness. The MSA plan will also be submitted to and reviewed by the members of the OSB.

The OSB members will review and comment on the MSA plan, including the MSA criteria, and determine if the criteria are adequate to achieve readiness. The MSA plan will be signed by the MSA lead (as author), the IWTU Startup director and IWTU Operations Manager (for concurrence), and the IWTU Project Director (for approval).

In parallel with developing the MSA plan, the MSA lead should identify the MSA team members and define their responsibilities. No team member should review work that they performed or reviewed for the IWTU Project. MSA team members will be documented in the MSA report.

5.1.5 Readiness Task List

Development of the readiness task list is governed by MCP-1126.

The IWTU Startup director will develop a detailed, activity-specific readiness task list that is cross-referenced to the MSA criteria. This is a list of tasks that must be completed and verified as complete before the MSA performance-based review period begins.

5.1.6 Readiness Task List Completion and Affirmation of Readiness

Completion of the readiness task list, and affirmation of readiness by the IWTU Operations Manager, is governed by MCP-1126.

The purpose of the readiness task list is to provide an orderly method for identifying all the items that need to be completed for full facility startup and operation, and then tracking each of these items to completion and capturing them in an evidence file.

Following are some principles that should be implemented for the readiness task list:

- Each item on the readiness task list should be clearly stated, along with a clear statement of what constitutes acceptable evidence of completion.
- Each item on the readiness task list should be assigned to a single individual for completion. Once an item has been completed, the item should be signed off and dated by the responsible individual.
- For each item, there should also be a signature of a member of the team responsible for collecting and maintaining all of the readiness task list checklists and evidence. This provides assurance of quality and consistency.
- Evidence may be in the form of hardcopy (paper files) or electronic (computer files)—either is acceptable. Paper files should be stored in fireproof file cabinets if they have not been copied or electronically backed-up. Computer files should be backed up to an offsite location on at least a daily basis to protect against loss.

Using the approved activity-specific readiness task list, the IWTU MSA Activity lead will conduct the following:

- Coordinate the completion of tasks to achieve readiness.
- Verify the completion is documented by having the responsible personnel sign the specific task verification.
- Coordinate the collection of detailed objective evidence for each MSA criterion that includes all applicable documentation substantiating task completion/readiness, such as copies of procedures or drawings, records of interviews or inspections, etc.
- Review the objective evidence with the responsible manager to obtain concurrence that the evidence is acceptable and complete.

Once all items on the readiness task list have been completed for a functional area, the respective IWTU managers will complete a final review of the task list and present, with an affidavit of affirmation, their objective evidence, and evidence of the processes used to confirm to a senior management review board that their area of responsibility is conclusively evident to support startup.

5.2 Management Self-Assessment and Integrated Testing

5.2.1 Management Self-Assessment – General Information

NOTE: *During the MSA and its follow-on activities, a DOE line management assessment (LMA) team will conduct observations of the readiness process. These observations will continue during the CORR. The purpose of the LMA is for DOE-ID to independently confirm that the readiness process is being conducted properly, and that the IWTU is ready for the federal ORR, as required by DOE O 425.1D. The LMA team's feedback will be provided to the DOE-ID manager and DOE-HQ for consideration during the decision to commence the federal ORR.*

5.2.2 Management Self-Assessment Report

After the MSA is complete, the MSA team will develop the MSA report. The MSA lead will issue the MSA report to the IWTU Project director. The MSA lead will identify prestart and poststart findings, if any, in the MSA report.

5.2.2.1 Include the team member assignments, reports on the approved MSA plan criteria, and a conclusion on the readiness of the activity/facility in the MSA report.

5.2.2.2 If the activity is to be sequentially placed in operation over a period of time, uniquely identify findings and their associated corrective actions for each phase of activity operations. Findings and their corrective actions that are required for compliance of each phase of the activity operations must be identified as prestart findings applicable to the associated operational phase.

The MSA lead will review the MSA report with the IWTU Startup director, IWTU Operations manager, and IWTU Project director to verify a clear understanding of the findings. The MSA lead will provide recommendations for corrective actions for prestart and poststart findings, as appropriate.

5.2.3 Corrective Action Process for Findings from the MSA and Readiness Reviews

Findings from the readiness reviews (MSA, CORR, and DOE ORR) will be categorized as either prestart or poststart findings. These are defined by MCP-1126, as follows:

- Prestart Findings: Findings that must be corrected prior to allowing unrestricted operation of an activity. Such findings must demonstrably impact the capability of the operation to be performed safely and in compliance with the applicable requirements as determined by the MSA lead. Management and process efficiency findings should normally be classified as poststart findings.

- Poststart Findings: Findings that should be corrected as soon as practical but are not required to be corrected prior to unrestricted operation.

Prestart findings must be resolved before the activity can commence. In preparation for an ORR, if the prestart findings cannot be resolved prior to commencement of the ORR, the findings must be identified as an open item on a manageable list that will be closed prior to startup or restart.

The IWTU Operations Manager will document response actions to findings in a closure package using DOE-STD-3006-2010 as a guide. At a minimum, the closure package will contain the documentation and evidence required for resolution of an ORR finding.

Prestart and poststart findings will be screened for inclusion into the Issue Communication and Resolution Environment (ICARE) following the requirements of MCP-598, "Corrective Action System," and those requiring tracking in accordance with the requirements of MCP-598 will be entered into ICARE.

The IWTU Project Director will approve the corrective actions, assignees, and due dates.

The IWTU Operations Manager will ensure completion of prestart corrective actions and demonstrate closure, documenting this on the Form 3. In addition, the IWTU Operations Manager will:

- Place closure evidence in the applicable project document file

- Manage records in accordance with MCP-557.

The IWTU Operations Manager will also ensure that the appropriate concurrence signatures are obtained for corrective actions and closure documentation. The required signatures vary depending on the particular review.

5.2.4 Contractor Operational Readiness Review Pre-Visit

Members of the CORR team may perform a previsit. The purpose of the previsit is to provide the team with background information and documentation on the facility. This enables the Team to prepare in advance of the CORR, so that the team can focus more on interviews and field observations, and so that the CORR can be completed as quickly as possible.

If a previsit is desired, the CORRTL will coordinate with the IWTU Activity lead to arrange a mutually convenient time that minimizes impacts on facility readiness preparation activities.

5.2.5 Declaration of Readiness to Proceed with the CORR

At the conclusion of the MSA, when findings have been dispositioned and all prerequisites specified in the POA have been met, the IWTU Project director will formally declare readiness to proceed with the CORR. This will be accomplished via memo to the CORRTL.

A small list of well defined open items may exist when readiness to proceed with the CORR is declared. This manageable list of open items should not be of such a nature individually or in aggregate to preclude an adequate review of any area by the CORR. The manageable list of open items, if any, will be addressed in the declaration of readiness to proceed memorandum.

5.2.6 Contractor Operational Readiness Review Report

At the conclusion of the CORR, the CORR team will develop a final report, which will address:

- A conclusion as to whether startup or restart of the nuclear facility can proceed safely.
- All readiness review findings.
- A lessons learned section that may relate to design, construction, operation and commissioning of similar facilities and to future CORR efforts, as appropriate. Note that the lessons learned section may be deferred until after operations begin.

- A statement that a set of requirements to govern safe operations of the facility has been formalized and agreed upon with DOE through the contract and the status of implementation.
- A statement regarding the CORRTL's assessment of the adequacy of the implementation of core functions and guiding principles of ISMS, as described in PDD-1004, "Integrated Safety Management System."
- The qualifications of CORR team members.

The CORRTL will approve and issue the CORR final report.

When the CORR final report is issued, the IWTU Project director will notify DOE-ID that the CORR has been successfully completed.

5.2.7 Corrective Action Process for Findings

The IWTU Operations Manager will address CORR prestart and poststart findings in accordance with the general guidance of Section 5.1.7 of this CTR Plan.

Prestart findings must be resolved before the activity can commence. In preparation for an ORR, if the prestart findings cannot be resolved prior to commencement of the ORR, the findings must be identified as an open item on a manageable list that will be closed prior to startup or restart.

The CORR team (lead) and IWTU Project director will concur with corrective actions and closure documentation for prestart items. They will also concur with corrective actions for poststart items per MCP-2783.

5.2.8 DOE Operational Readiness Review Pre-Visit

Members of the DOE ORR team may perform a previsit. The purpose of the previsit is to provide the team with background information and documentation on the facility.

If a previsit is desired, the FORR team leader will coordinate with the IWTU Readiness Activity lead to arrange a mutually convenient time that minimizes impacts on facility readiness preparation activities.

5.2.9 Readiness to Proceed Memorandum

When actions required for IWTU startup have been completed, including the completion of evidence packages for all CORR findings, the IWTU Project Director will develop a readiness to proceed memorandum. A small list of well defined open items may exist when readiness to proceed with the DOE ORR is declared. This manageable list of open items should not be of such a nature individually or in aggregate to preclude an adequate review of any area by the DOE ORR. The manageable list of open items, if any, will be addressed in the readiness to proceed memorandum. The readiness to proceed memorandum is used to certify readiness for startup upon completion of the identified open prestart items on the manageable list, and completion of the DOE ORR.

The IWTU Project Director will forward the readiness to proceed memorandum and a copy of the CORR final report to DOE-ID, who will forward it to DOE-HQ, the DOE startup authority for IWTU.

5.3 DOE Operational Readiness Review and Authorization to Start Up Nuclear Operations

5.3.1 DOE Operational Readiness Review Performance

Once DOE-ID and DOE-HQ (the DOE startup authority for IWTU) have reviewed the evidence and agreed that IWTU is ready, the DOE ORR will be scheduled. Participating in these discussions will be representatives of the DOE LMA team, who were responsible for providing an independent perspective of the contractor readiness process and the facility's readiness to operate.

The DOE ORR will start on a date agreed to by the ORR team lead and the IWTU Project Director. The ORR will nominally last two weeks, but may take longer if necessary to complete an adequate level of review. Similar to the previous readiness reviews, the ORR team will conduct document reviews, personnel interviews, and performance demonstration observations.

5.3.2 DOE Operational Readiness Review Report

Upon completing the ORR, the team will develop and issue a final report, which will include any findings identified.

5.3.3 Corrective Action Process for Findings

Once the IWTU Project Director is in receipt of the findings from the ORR, IWTU will initiate the corrective action process for the findings.

To receive authorization to start up nuclear operations, prestart findings require approved corrective action plans and complete closure evidence, and post start findings require approved corrective action plans at a minimum. All prestart findings must be fully closed, including those identified at earlier stages of the readiness process.

The ORR team (lead) and IWTU Project Director will concur with the corrective actions and closure documentation for prestart items. They will also concur with corrective actions for poststart items.

5.3.4 Request for Authorization to Start Up

When all prestart findings are closed and all poststart finding corrective action plans are approved, the IWTU Project director will certify by correspondence to DOE-ID that IWTU is ready for startup. DOE-ID will review the correspondence and forward it to DOE-HQ, the DOE startup authority for IWTU.

5.3.5 Authorization to Start Up and Nuclear Operations Authorization Agreement

When DOE-HQ has reviewed the evidence and determined that IWTU is ready to start up, DOE-HQ will grant approval. Along with this approval, DOE will provide the signed Nuclear Operations authorization agreement which was prepared and submitted earlier in this process (e.g., prior to the MSA).

Receipt of the authorization to start up and the nuclear operations authorization agreement will allow IWTU to commence nuclear operations as controlled by the Startup Plan.

6. DEFINITIONS

Acceptance criteria. Refers to the performance, physical condition, or quantitative analysis results that will be monitored and measured during the performance of the test. These characteristics and attributes define the parameters for the success or failure of a component or system that demonstrates the R/C is met.

Commercial testing. Testing of mockups is conducted using documented work instructions per STD-101; test results are documented in the WO. Mockup type testing are commercial tests.

Commissioning manager. Individual with overall organizational responsibility for test planning, performance, and completion of all testing on IWTU. Within this procedure, the Testing and Startup manager normally represents the Design Authority.

Deficiency. A measured or observed condition of performance of an item or SSC being tested that does not meet a specific acceptance criterion.

Instrumentation and control (I&C) computer system. For the purposes of this procedure, any type of electronic hardware that utilizes a microprocessor for the purposes of monitoring or controlling operations in nuclear and non-nuclear facilities. This can include, but is not limited to data acquisition computers, distributed control systems, and programmable logic controllers.

Integrated test. Documented trial use of a facility or system to ensure overall, integral performance of equipment that was SO tested in separate units. This test includes demonstrating the compatibility and operability of new items with existing or auxiliary items. These tests may be performed before or after turnover to Operations.

Inspections, tests, analyses, and acceptance criteria (ITAAC). A program utilized by the IWTU Project that ensures key project requirements/commitments are identified and expectations are defined regarding the verification or requirements/commitments implementation during the construction and testing phases of the project life cycle. The ITAAC process uses a systematic, phased approach in measuring and demonstrating project readiness for turnover from construction to through startup to operation.

Joint Test Group (JTG). A senior level management team established for the oversight of test planning, execution, and completion of testing all levels of testing on the IWTU Project (see CTR-283, "IWTU—Joint Test Group").

Measuring and test equipment (M&TE). All tools, gauges, instruments, devices, or systems used to inspect, test, measure, calibrate, or troubleshoot to control or acquire data to specified requirements.

Mockup testing. Testing that uses simulated equipment, rather than the actual equipment, to verify performance of selected components and skid-mounted systems (see commercial testing).

Structures, systems, and components (SSC). Structures are elements that provide support or enclosure, such as buildings, freestanding tanks, basins, dikes, and stacks. Systems are collections of components assembled to perform a function, such as heating, ventilating, and air conditioning, control systems, utility systems, reactor cooling systems, or fuel storage systems. Components are items of equipment such as pumps, valves, and relays; or elements of a larger array such as computer software, lengths of pipe, elbows, or reducers.

System and subsystem (S/S). This primarily refers to S/Ss shown in the graphic in the S/S appendix of PLN-2909. S/S may also refer to equipment, building, rooms, structures, and other areas that will be turned over.

System operability (SO) *test.* Documented trial use of an SSC to ensure it functions as designed and in accordance with designated acceptance criteria.

System performance test. Testing required by the Idaho Department of Environmental Quality (DEQ) to demonstrate the facility will perform within the requirements of the environmental permits.

Test deficiency. The occurrence of an unanticipated event identified during testing (for example, equipment or component failure, acceptance criteria not met, a procedure that provides inadequate direction to perform the intended task, or a conflict between procedures).

Test Deficiency Report. A form administered by the Testing organization that documents a test deficiency found during testing.

Test director (TD). The TD is responsible for individual testing activities in the field. The TD provides technical support to the Commissioning manager by performing the following:

A. Scoping that identifies the boundaries of a system and the items within these boundaries to facilitate timely installation, turnover, testing, and future calibration/maintenance activities. Troubleshooting within these boundaries is permitted by parameters identified by the Design Authority or Commissioning manager, provided that the system or component has not already been incorporated into the facility baseline (accepted and turned over to the Operations/Maintenance organization).

B. Walkdowns, submitting items to the installation organization for inclusion on the punch list of incomplete items, preparing test specifications, verifying calibration of instruments, conducting checkout and initial operation, and conducting functional testing.

C. Oversight of commissioning activities, this includes supervision of the test engineers, interface with Construction and Operations to coordinate the plan of the day.

D. Upon successful completion of this testing, the TD is responsible for preparing, certifying the test results summary packages for JTG approval. Where no TD is specifically designated, the Commissioning manager or Design Authority for the project serves as the TD.

Test engineer. Individual with overall responsibility for test planning, performance, and completion. Within this procedure, the test engineer normally represents the Design Authority.

Tests. A series of tests that require actuation, operation, or establishment of specified conditions to evaluate the performance and integrity of the as-built SSCs. The preferred means to satisfy the ITAAC is in-situ testing, where possible, of the as-built facility and the as-installed condition. Testing may be mockup/pilot, vendor construction, component, system, integrated, system performance test, or a combination thereof.

Testing. An element of verification for determining the capability of an item to meet specified requirements by subjecting the item to a set of chemical, physical, environmental, or operating conditions.

Vendor or Factory Acceptance Testing. Testing performed by a supplier to verify performance of a component or system, manufacture testing, or shop testing).

Walkdown. A physical inspection, to the maximum extent possible, to observe the location at which activities will be performed and to inspect the equipment that will be used to perform the test, to validate that the test procedure can be performed as written.

Work control documents. Includes URS-WD construction work control packages (CWCPs), and CWI test procedures or inspection checklists.

7. REFERENCES

CTR-257, "IWTU Inspections, Tests, Analyses, and Acceptance Criteria (ITAAC) Working Group Charter"

CTR-283, "IWTU—Joint Test Group"

DOE Order 413.3A, "Program and Project Management for the Acquisition of Capital Assets," Change 1

DOE-STD-3006-2000, "Planning and Conduct of Operational Readiness Reviews"

DOE-STD-3027-99, "Integrated Safety Management System (ISMS) Team Leader's Handbook"

MCP-135, "Document Management"

MCP-550, "Software Management"

MCP-557, "Records Management"

MCP-598, "Corrective Action System"

MCP-1126, "Performing Management Self-Assessments for Readiness"

MCP-2040, "IWTU—Turnover Process"

MCP-2049, "IWTU Inspections, Tests, Analyses, and Acceptance Criteria (ITAAC) Program"

MCP-2075, "Test Control Procedure for the Integrated Waste Treatment Unit (IWTU)"

MCP-2230, "IWTU Temporary Modification Control"

MCP-2391, "Control of Measuring and Test Equipment"

MCP-2446, "Controlling Lists of Nuclear Facilities, and Nuclear Facility Managers"

MCP-2783, "Startup and Restart of Nuclear Facilities"

MCP-3056, "Test Control"

MCP-3562, "Hazard Identification, Analysis, and Control of Operational Activities"

MCP-3651, "Chapter IX—Level I & II Lockouts and Tagouts"

MCP-6303, "Calibration of Installed Facility Process and Control Instrumentation"

PDD-1004, "Integrated Safety Management System"

PLN-3491, "Mockup and Prototype Testing Plan"

PLN-2038, "Quality Program Plan for the Integrated Waste Treatment Unit Project"

PLN-2909, "IWTU Inspections, Tests, Analyses, and Acceptance Criteria (ITAAC) Program Plan"

PLN-3038, "IWTU Training Program Description and Training Implementation Matrix"

PLN-3298, IWTU Comprehensive Performance Test Plan"

PLN- 3588, "IWTU Transition to Operations Plan"

PLN-3722, "Management Self Assessment Plan for Startup of the Integrated Waste Treatment Unit"

PRD-5082, "Test Control"

STD-101, "ICP Integrated Work Control Process"

TFR-349, "Technical and Functional Requirements for the Integrated Waste Treatment Unit"

URS-WD Manual No. 1, *Management Systems*, Procedure 1P-7.0, "Turnover Plan"

URS-WD Manual 2, *Construction Program*, Procedure 2A-2.0, "Construction Work Control Process"

8. APPENDIXES

Appendix A, System/Subsystem List

Appendix A

System/Subsystem List

No.	System/Subsystem
1.	Power distribution center (PDC)
2.	Control room/DCS room
3.	UPS
4.	DCS
5.	Electrical grounding
6.	Sewer
7.	Potable water/Eyewash Stations
8.	Not Used
9.	Plant air
10.	HVAC/Building Steam/condensate
11.	Control room/DCS room HVAC
12.	Not Used
13.	Treated water/nitric acid
14.	Closed-circuit television (CCTV)
15.	Nitrogen (headers and manifolds)
16.	Oxygen (headers and manifolds)
17.	Canister fill systems 0
18.	Canisters
19.	Transfer Bell Crane
20.	Remote surveying (airlock) 0
21.	Product receiver/cooler 0
22.	Product handling vacuum system/filter
23.	Canister fill systems 1
24.	Remote surveying (airlock) 1
25.	Product receiver/cooler 1
26.	Product Receiver Filter/Product Transfer
27.	Vault Air Compressor

No.	System/Subsystem
28.	Vault
29.	Air Pallet/Tow Vehicle
30.	Vault Lid/Delid
31.	Process Steam
32.	Lightening Protection
33.	Cathodic Protection
34.	Stack/Mixing Box/Condensate Tank
35.	Product Storage Building
36.	Process Exhaust Blowers
37.	Mercury Adsorbers (i.e., granular activated carbon [GAC] beds)
38.	Process HEPAs
39.	Offgas Blowers
40.	Offgas Cooler
41.	Remote Tools for OGF
42.	Off Gas Cooler Surge Water Tank
43.	Off Gas Filter (OGF)
44.	Remote Tools for PGF
45.	Process Gas Filter (PGF)
46.	Carbon reduction reformer (CRR)
47.	Remote Tools for DMR
48.	Denitration mineralization reformer (DMR)
49.	Waste feed tank system
50.	Fluidizing Gas
51.	Main HVAC (chillers, blowers, ducting, HEPAs, etc.)
52.	Coal and Carbon Funnels and Airlocks (DMR/CRR)
53.	Additive Conveyors and Hoppers
54.	Not Used – Combined with 53.
55.	Coal and Carbon Silos
56.	Silo Vacuum/Bag Filter
57.	Plugs, Doors and Shielding

No.	System/Subsystem
58.	Maintenance crane
59.	Solids sampling system
60.	Drains and Sumps
61.	Fire Water Collection Tank
62.	Fire Suppression/Protection
63.	Communications/Fire Detection and Alarms
64.	Communications/Voice Paging
65.	Communications/Telecom Fiber
66.	Communications/ECS
67.	Off-gas continuous emissions monitoring system (CEMS)
68.	Off-gas radiation monitoring system (RMS)
69.	O_2 monitor
70.	Continuous air monitors (CAMs)
71.	Radiation area monitors (RAMs)
72.	Safety-significant instrumented system (ANSI/ISA-84.00.01)
73.	Nitrogen (tank & evaporator)
74.	Oxygen (tank & evaporator)
75.	Waste feed from NWCF
76.	Nitric Acid/Decon
77.	IWTU civil, structural and architectural (facility)

Document ID: PLN-2019
Revision ID: 5
Effective Date: 05/11/11

Plan

Project No. 25051

System Plan for the Treatment of INTEC Sodium-Bearing Waste Using the Steam Reforming Process

Idaho Cleanup Project

CH2M ◆ WG Idaho, LLC is the Idaho Cleanup Project contractor for the U.S. Department of Energy

ABSTRACT

This document describes the plan and schedule for treating sodium-bearing waste (SBW) during the period following the completion of the Operational Readiness Review for the steam reforming facility through the filling and storage of the solid product containers. There are approximately 900,000 gal of SBW, a mixed liquid waste containing both hazardous and radioactive components, stored in three 300,000-gal tanks at the Idaho Nuclear Technology and Engineering Center Tank Farm. The bulk of the waste is to be treated by steam reforming in the Integrated Waste Treatment Unit (IWTU) over approximately a 12-month period. There will be an approximately 9-in. waste heel left in the bottom of each tank after pumping with currently installed equipment. The waste remaining in the heels will be removed as required and treated over approximately a 2-month period. This document also describes some of the key scheduling issues and assumptions associated with the operation of the steam reforming system. This document also defines the plan for blending tank waste from the three Tank Farm tanks to provide the most consistent waste stream to the IWTU.

CONTENTS

1. INTRODUCTION 4
2. INTEC WASTE BACKGROUND 4
3. STEAM REFORMING PROCESS OVERVIEW 5
4. SBW PROCESSING PLAN AND SCHEDULE 6
   4.1 Waste Processing Schedule 6
      4.1.1 Transition to Hot Operations 9
      4.1.2 Tank Processing 9
      4.1.3 Treatment of Tank 187, 188, 189, and 190 Heel and Rinse Liquids 11
      4.1.4 Treatment of Tank 187, 188, and 189 Heel Solids 11
   4.2 Product Shipment and Storage 12
   4.3 Process Consumables 12
   4.4 Sensitivity of Schedule and Containers Count to Process Feed Rate 12
   4.5 Canister Count Uncertainty 13
5. KEY SCHEDULE ISSUES AND ASSUMPTIONS 14
   5.1 Production/Characterization/Sampling Steps are Identified and Integrated into System Plan 14
   5.2 Assumed Throughput and Production Efficiencies are Defined and Reasonable 14
   5.3 Assumptions are Supported by Time and Motion Studies, Calculations, and Operating Experience 15
   5.4 Resource Requirements for Each Step Identified 15
   5.5 Failure/Reject Rate Assumptions Documented and Supported 15
   5.6 Equipment and Material Needs Including Availability and Reliability Defined 16
   5.7 Initial Production Plan Formulated 16
   5.8 Design Approach has Optimized Processing and Production Objectives Considering Spare Capacity 16
   5.9 Volume of Newly Generated Liquid Waste (NGLW) will have Minor Impacts on IWTU Operations and Canister Count 17
6. REFERENCES 17

FIGURES

1. IWTU SBW processing plan assuming 100% availablity. 7

TABLES

1. IWTU processing scenarios. 8

ACRONYMS

CH	contact handled
CRR	Carbon Reduction Reformer
DEQ	Idaho Department of Environmental Quality
DMR	Denitration Mineralization Reformer
DOE	U.S. Department of Energy
HEPA	high-efficiency particulate air
HLW	high-level waste
HVAC	heating, ventilating, and air conditioning
INTEC	Idaho Nuclear Technology and Engineering Center
IWTU	Integrated Waste Treatment Unit
NGLW	newly generated liquid waste
NWCF	New Waste Calcining Facility
ORR	Operational Readiness Review
PEWE	process equipment waste evaporator
RAM	reliability, availability, and maintainability
RH	remote handled
SBW	sodium-bearing waste
SPT	System Performance Test
THOR®	Thermal Organic Reduction
TRU	transuranic
UDS	undissolved solids

1. INTRODUCTION

Approximately 900,000 gal of mixed liquid waste, containing both hazardous and radioactive components, are stored in three 300,000-gal tanks at the Idaho Nuclear Technology and Engineering Center (INTEC) Tank Farm. This waste is collectively known as sodium-bearing waste (SBW). The U.S. Department of Energy (DOE) has selected steam reforming as its preferred technology for treating the SBW. The specific steam reforming technology to be used is called THOR®.[a] THOR® is a thermal, fluidized-bed process that uses superheated steam, carbon, and other additives to convert the SBW into a solid granular product that is packaged in canisters suitable for disposal as remote-handled (RH) transuranic (TRU) waste.

This plan includes a schedule for treating the SBW, as well as flush solutions to be generated by waste removal activities that occur after the tanks are emptied to prepare them for closure. This document describes some of the key scheduling issues and assumptions associated with the operation of the steam reforming system. This document also describes the plan and schedule for treating the SBW during and following the period following the completion of the Operational Readiness Review (ORR) and System Performance Test (SPT) for the steam reforming facility through the filling and storage of the solid product containers.

2. INTEC WASTE BACKGROUND

Spent nuclear fuel was reprocessed between 1953 and 1992 at INTEC. Fuel reprocessing recovered enriched uranium for DOE and generated, as a byproduct, radioactive liquid wastes that were stored in the INTEC Tank Farm. The uranium recovery and purification processes included three steps, often called "cycles." The first cycle separated the uranium in the dissolver product solution from the bulk of the fission products, cladding material, and other components of the spent nuclear fuel. The second and third cycles purified the recovered uranium and separated it from actinides such as plutonium. Each uranium recovery and purification cycle produced an aqueous waste (raffinate) that was stored in the Tank Farm. First-cycle raffinate accounted for most of the radioactive fission products originally in the fuel and met today's criteria for high-level waste (HLW). The second- and third-cycle raffinates were smaller in volume and contained much less (orders of magnitude) radioactivity than first-cycle raffinate.

In addition to the three-step fuel reprocessing system, there were several other sources of waste to the Tank Farm. Most of these sources generated dilute wastes. These sources included off-gas condensers, ion exchange regeneration, laboratories, and process equipment decontamination. Dilute wastes were concentrated in an evaporator and then sent to the Tank Farm for storage.

First-cycle raffinate was generally stored separately from other wastes because of its high fission product content and heat generation rate. Second- and third-cycle raffinates were often stored with the evaporator concentrate due to their low fission product activity and heat generation rates. Between 1963 and 2000, most of the liquid waste (about 8,000,000 gal), including all of the first-cycle waste, was removed from the Tank Farm, treated, and converted into a solid, granular form called calcine. Calcination of the Tank Farm waste ceased in 2000, pending a decision on how to treat the remaining waste.

---

a. The THOR® fluidized bed steam reforming process technology is owned by Studsvik, Inc.

Today, the INTEC Tank Farm contains about 900,000 gal of primarily evaporator concentrate mixed with a small amount of second- and third-cycle raffinate (this raffinate comprises ~6% of the remaining waste). This waste is called SBW due to its relatively high sodium ion concentration (1-2 molar). The sodium came from sources that used sodium-containing chemicals such as sodium carbonate and sodium hydroxide. In addition to sodium, SBW also contains large amounts of acid (1-3 molar), nitrate (5–8 molar), potassium (0.2 molar), and aluminum (0.5–0.8 molar). SBW is classified as transuranic waste due to its relatively high content of alpha-emitting radionuclides that have a greater atomic weight than uranium.

3. STEAM REFORMING PROCESS OVERVIEW

The steam reforming process to be used for treatment of the INTEC SBW consists of two steam reformers that are integrated into a single process system. The system converts the SBW into a dry, solid, carbonate product.

The steam reforming process includes a feed collection and transfer system through which waste from the Tank Farm is transferred into the first of two steam reformers, the Denitration Mineralization Reformer (DMR). The DMR contains a moderate temperature (~640°C) fluidized bed. The bed particles are fluidized by low pressure superheated steam. The superheated steam and a small amount of added oxygen react with carbon (a process additive) to produce process heat and a chemically reducing environment. The liquid waste is sprayed into the fluidized bed where it evaporates. As the waste evaporates in the DMR, the dissolved constituents form additional bed material that is removed as solid product.

The DMR destroys organics, nitric acid, and nitrates in the feed, and converts the bulk of the dissolved chemicals into a solid, mineral product. The DMR converts organics in the waste into CO, CO_2, H_2, and short-chained organic molecules such as CH_4. The strong reducing environment inside the DMR transforms nitrates and nitric acid into elemental nitrogen. NO_x formation is minimal. The DMR converts most of the dissolved constituents in the waste into a mineral form, comprised primarily of alkali metal-based carbonates, aluminates, and other oxides.

Process gas from the DMR goes through a cyclone separator, which removes small particles and returns them to the DMR. The process gas then goes through a set of sintered metal filters that remove ~97% of fine particles. The fine particles are periodically removed from the filter and combined with the solid granular product from the DMR for product packaging. The filtered process gas then flows to the second steam reformer.

The second reformer, the Carbon Reduction Reformer (CRR), operates at a higher temperature (900 to 1000°C) than the first and contains a semipermanent fluidized bed of alumina particles. Oxygen is introduced into the CRR, which changes the off-gas environment from reducing to oxidizing. The H_2, CO, and short-chained organics in the DMR process gas are oxidized to CO_2 and water vapor in the CRR.

Gases from the CRR (mainly oxygen, carbon dioxide, nitrogen, and water vapor) are cooled in a spray cooler, filtered through sintered metal filters and high-efficiency particulate air (HEPA) filters, processed through a mercury adsorber (mercury is volatilized in the DMR and is removed from the off-gas stream), and vented to the atmosphere through a monitored, permitted stack.

The carbonate product from the DMR and sintered metal filters is pneumatically transferred to a solid product packaging station. At the packaging station, the product is cooled and then loaded into remote-handled canisters.

4. SBW PROCESSING PLAN AND SCHEDULE

The INTEC SBW processing schedule is shown in Figure 1, which is divided into five sections. The top section shows the processing of the SBW divided into two operating campaigns. These campaigns are differentiated by the source of the waste being processed. The top section includes a schedule for processing the concentrated SBW in Tanks VES-WM-187, -188, and-189; transferring waste between tanks in the Tank Farm; cleaning tanks; and treating the waste generated by tank cleaning activities assuming no downtime of the IWTU. An additional 69 days of operation are expected to account for operational downtime and time to change out the mercury adsorbers. The second section of Figure 1 shows the amount of waste processed during each month time period. The third section of Figure 1 shows solid product canister storage activities. The fourth and fifth sections of Figure 1 contain both a monthly and a cumulative summary of materials such as process additives and consumables used by the steam reforming process.

4.1 Waste Processing Schedule

Figure 1 shows the treatment of SBW broken down into two operating campaigns, characterized by whether the system is processing tank waste or processing wash solution used for final cleaning of the tanks. The tank processing campaign treats the existing, concentrated SBW from Tanks VES-WM-187, -188 and -189. This campaign treats the bulk of the waste and empties the three tanks to their “heel” volumes (the small amount of waste that cannot be removed with installed transfer equipment). The last campaign treats the tank heels (~10,000 gal per tank) and rinse water used to move the heels from the waste tanks.

The waste is transferred to the IWTU via a set of three intermediate tanks known as the New Waste Calcining Facility (NWCF) Blend and Hold tanks. The Blend and Hold tanks have a combined volume of 10,000 gal—two have a volume of 3,000 gal each, and the third has a volume of 4,000 gal. An advantage to using the Blend and Hold tanks is that the waste can be mixed and sampled. This sampling capability will be used to for performing solids settling tests of the waste to estimate solids loading in a batch. This sampling capability may also be used for characterization of the waste, if desired. The usage and sampling schemes for the Blend and Hold tanks are discussed in detail in Section 4.1.2.

Before solid product canisters may be shipped offsite, the waste must be characterized. The baseline assumption is that historical sampling of the SBW composition in the VES-WM-187, -188, and -189 tanks, combined with process knowledge, dose measurements, and weight of final product containers, can be used to generate the acceptable knowledge to calculate the composition of the final product and that these are adequate to ensure the final waste form meets waste acceptance characterization needs.

After completion of the SPT, it could be several months before receipt of final approval from the Idaho Department of Environmental Quality (DEQ) for full operation authority. During this time, the IWTU intends to continue to operate full-time at a rate limited to 3.0 gpm as stated in the approved IWTU SPT Plan (PLN-3298). After receipt of final approval from the DEQ for full operation authority, the environmental permit will set the limit for processing at the IWTU. This permit limit is expected to be not to exceed 3.5 gpm. This plan assumes that the IWTU will run at a nominal rate of 2.5 gpm for all of the processing campaigns.

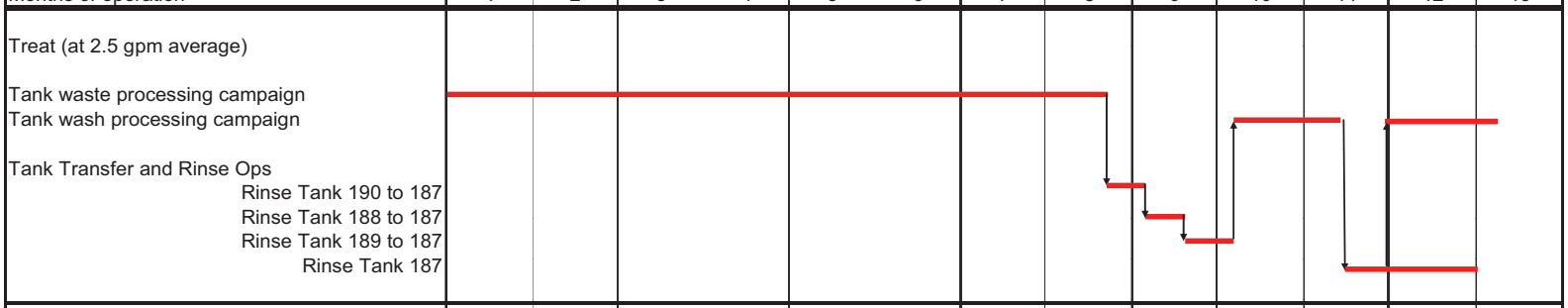

Months of operation	1	2	3	4	5	6	7	8	9	10	11	12	13
Tank													
Volume WM-187 processed	3.26E+04	6.84E+04	1.04E+05	1.40E+05	1.77E+05	2.14E+05	2.51E+05	2.66E+05	2.66E+05	2.76E+05	2.76E+05	2.76E+05	2.76E+05
Volume WM-188 processed	7.15E+04	1.40E+05	2.08E+05	2.72E+05	2.72E+05	2.72E+05	2.72E+05	2.72E+05	2.72E+05	2.82E+05	2.82E+05	2.82E+05	2.82E+05
Volume WM-189 processed	0.00E+00	0.00E+00	0.00E+00	4.17E+03	7.47E+04	1.45E+05	2.16E+05	2.72E+05	2.72E+05	2.82E+05	2.82E+05	2.82E+05	2.82E+05
Volume water processed	5.39E+03	1.08E+04	1.62E+04	2.14E+04	2.33E+04	2.51E+04	2.70E+04	2.77E+04	2.77E+04	2.31E+05	2.83E+05	2.83E+05	2.83E+05
Store													
Number of canisters per month	79	79	79	80	85	85	85	54	0	44	10	0	7
Cumulative canisters count	79	158	238	317	403	488	573	627	627	671	681	681	688
Total Consumables Used per Month													
Alumina	5.32E+02	5.32E+02	5.32E+02	5.32E+02	5.32E+02	5.32E+02	5.32E+02	3.47E+02	0.00E+00	1.13E+03	2.60E+02	0.00E+00	0.00E+00
Aluminum Hydroxide	3.49E+01	3.50E+01	3.50E+01	3.54E+01	4.16E+01	4.16E+01	4.16E+01	2.76E+01	0.00E+00	1.11E+01	8.08E-01	0.00E+00	0.00E+00
Coal	1.89E+05	1.90E+05	1.90E+05	1.91E+05	1.98E+05	1.98E+05	1.98E+05	1.28E+05	0.00E+00	3.63E+05	8.38E+04	0.00E+00	0.00E+00
Coke	7.78E+04	7.78E+04	7.78E+04	7.78E+04	7.75E+04	7.75E+04	7.75E+04	5.07E+04	0.00E+00	1.70E+05	3.88E+04	0.00E+00	0.00E+00
Water for Cooling	1.56E+06	1.56E+06	1.56E+06	1.56E+06	1.57E+06	1.57E+06	1.57E+06	1.02E+06	0.00E+00	3.35E+06	7.67E+05	0.00E+00	0.00E+00
Steam	6.78E+05	6.78E+05	6.78E+05	6.77E+05	6.74E+05	6.74E+05	6.74E+05	4.40E+05	0.00E+00	1.17E+06	2.61E+05	0.00E+00	0.00E+00
N2	1.79E+06	1.78E+06	1.78E+06	1.77E+06	1.75E+06	1.75E+06	1.75E+06	1.17E+06	0.00E+00	3.73E+06	8.54E+05	0.00E+00	0.00E+00
Instrument Air	7.17E+05	7.32E+05	7.32E+05	7.34E+05	7.61E+05	7.61E+05	7.61E+05	4.66E+05	0.00E+00	1.63E+06	3.72E+05	0.00E+00	0.00E+00
O2	3.23E+05	3.23E+05	3.23E+05	3.23E+05	3.30E+05	3.30E+05	3.30E+05	2.14E+05	0.00E+00	1.18E+06	2.83E+05	0.00E+00	0.00E+00
Cumlative Consumables Used at End of Month													
Alumina	5.32E+02	1.06E+03	1.60E+03	2.13E+03	2.66E+03	3.19E+03	3.72E+03	4.07E+03	4.07E+03	5.20E+03	5.46E+03	5.46E+03	5.46E+03
Aluminum Hydroxide	3.49E+01	6.99E+01	1.05E+02	1.40E+02	1.82E+02	2.24E+02	2.65E+02	2.93E+02	2.93E+02	3.04E+02	3.05E+02	3.05E+02	3.05E+02
Coal	1.89E+05	3.80E+05	5.70E+05	7.60E+05	9.58E+05	1.16E+06	1.35E+06	1.48E+06	1.48E+06	1.84E+06	1.93E+06	1.93E+06	1.93E+06
Coke	7.78E+04	1.56E+05	2.33E+05	3.11E+05	3.89E+05	4.66E+05	5.44E+05	5.94E+05	5.94E+05	7.64E+05	8.03E+05	8.03E+05	8.03E+05
Water for Cooling	1.56E+06	3.12E+06	4.69E+06	6.25E+06	7.82E+06	9.39E+06	1.10E+07	1.20E+07	1.20E+07	1.53E+07	1.61E+07	1.61E+07	1.61E+07
Steam	6.78E+05	1.36E+06	2.03E+06	2.71E+06	3.38E+06	4.06E+06	4.73E+06	5.17E+06	5.17E+06	6.35E+06	6.61E+06	6.61E+06	6.61E+06
N2	1.79E+06	3.57E+06	5.34E+06	7.12E+06	8.87E+06	1.06E+07	1.24E+07	1.35E+07	1.35E+07	1.73E+07	1.81E+07	1.81E+07	1.81E+07
Instrument Air	7.17E+05	1.45E+06	2.18E+06	2.91E+06	3.68E+06	4.44E+06	5.20E+06	5.66E+06	5.66E+06	7.29E+06	7.66E+06	7.66E+06	7.66E+06
O2	3.23E+05	6.46E+05	9.69E+05	1.29E+06	1.62E+06	1.95E+06	2.28E+06	2.49E+06	2.49E+06	3.67E+06	3.95E+06	3.95E+06	3.95E+06

Figure 1. IWTU SBW processing plan assuming 100% availability.

Table 1 summarizes the scenarios that were run in the mass and energy balance as well as the calculated duration for processing the waste and canister count. The scenarios are described in more detail below.

Table 1. IWTU processing scenarios.

Scenario	Description	Days to Process	Canisters Produced
1	9,524 gal of WM-188 476 gal jet water dilution 2.5 gpm feed rate	3	6.6
2	131,240 gal of WM-187 liquid 262,479 gal of WM-188 liquid 51,075 kg WM-187 solids 20,823 gal jet water dilution 2.5 gpm feed rate	117	305.9
3	121,563 gal of WM-187 liquid 243,127 gal of WM-189 liquid 47,309 kg WM-187 solids 6,391 gal jet water dilution 2.5 gpm feed rate	105	293.8
4	28,776 gal of WM-189 liquid 0 gal jet water dilution 2.5 gpm feed rate	8	21.1
Operational Downtime		69[a]	N/A
SUBTOTAL to Empty Tanks to Heel Volume		**302**	**628**
5	9,103 gal of WM-187 liquid 9,103 gal of WM-188 liquid 9,103 gal of WM-189 liquid 122,641 gal of wash water/jet water dilution 2.5 gpm feed rate	42	28.3

Table 1. (continued).

Scenario	Description	Days to Process	Canisters Produced
6	688 gal of WM-187 liquid 688 gal of WM-188 liquid 688 gal of WM-189 liquid 6,577 kg WM-187 solids 4,998 kg WM-188 solids 4,998 kg WM-189 solids 132,513 gal wash water/jet water dilution 2.5 gpm feed rate	38	25.5
Product Volume Remaining in Process at End of Operations		N/A	6[b]
TOTAL		**382**	**688**

a. A 14-day shutdown is included to change out a mercury adsorber bed plus 55 days added for expected delays due to equipment failures (see EDF-8966, "IWTU Online Time Analysis").
b. Six additional canisters are produced due to the volume of waste in the vessels used to start up the plant.

4.1.1 Transition to Hot Operations

The start of the first campaign, SBW processing, will begin following successful completion of an ORR. The SPT will be conducted using SBW. This initial SBW volume will be from Tank VES-WM-188. It is considered prudent to transition to hot operations with VES-WM-188 because it contains almost no UDS and is therefore anticipated to be easier to process. Starting the IWTU with a low UDS feed will allow IWTU to identify and resolve any hot operation concerns prior to treating waste containing more UDS. The steam reforming facility's starting condition is assumed to be at operating temperature, ready to receive the first transfer of SBW.

Assuming there are no process interruptions and assuming the addition of 5% (by volume) water due to steam condensate from jetting the waste from VES-WM-188 to the NWCF (known as jet dilution), the processing of 10,000 gal of VES-WM-188 waste takes about 3 days at the process rate of 2.5 gpm. During this transition to hot operations 6.6 canisters are produced.

4.1.2 Tank Processing

After the initial volume of waste has been processed, the IWTU will proceed to process the full volume of Tank Farm waste down to the tank heel using existing tank equipment. While processing the tank waste, it is planned to blend the waste from the INTEC Tank Farm so that waste fed to the IWTU is as consistent as possible to avoid significant swings in process chemistry. Tank VES-WM-187 was used to collect the water used to wash other tanks in INTEC so its liquid is significantly more dilute in dissolved solids than the other tanks but it also contains significant quantities of undissolved solids that had settled in the bottoms of other tanks. This tank needs to be blended with VES-WM-188 and -189 in order to maintain consistent process chemistry. This section defines the plan for processing waste through the IWTU in order to maintain the most consistent chemistry.

Following processing the initial 10,000 gal of waste, the waste from the bottom of VES-WM-187 (high UDS concentration) will be blended with the waste from VES-WM-188 and then VES-WM-189 once VES-WM-188 has been emptied. The waste will be blended at a ratio of 1:2 (VES-WM-187 waste to VES-WM-188 or VES-WM-189). The wastes in VES-WM-188 and VES-WM-189 were made from very similar processes and have been shown to have very similar chemical compositions (EDF-8471) and very low UDS levels (<6 in.) so it is not necessary to blend these two tanks. The following is the plan for blending the waste:

- Fill VES-NCC-101 (4,000 gal) with VES-WM-188.
- Add 2,000 gal of VES-WM-188 to VES-NCC-102 and 2,000 gal to VES-NCC-103. Add 1,000 gal to both VES-NCC-102 and -103 of VES-WM-187 transferred from bottom jet (high solids).
- Transfer waste in VES-NCC-102 and -103 to the IWTU.
- Transfer 2,000 gal from VES-NCC-101 (VES-WM-188 waste) to VES-NCC-102 and 2,000 gal to VES-NCC-103. Add 1,000 gal to both VES-NCC-102 and 103 of VES-WM-187 waste transferred from bottom jet (high solids).
- Transfer waste from VES-NCC-102 and -103 to the IWTU.
- Add 1,000 gal to both VES-NCC-102 and -103 of VES-WM-187 waste transferred from bottom jet (high solids). Add 2,000 gal of VES-WM-188 waste to VES-NCC-102 and 2,000 gal to VES-NCC-103.
- Transfer waste from VES-NCC-102 and -103 to the IWTU.
- Repeat using VES-WM-189 instead of VES-WM-188 once VES-WM-188 tank has been emptied to its jet heel.

Using the above blend scenario there will be approximately 30,000 gal of waste remaining in VES-WM-189 when VES-WM-187 has been emptied to its heel volume. This waste will be processed by itself to complete the state milestone. The blend and hold tanks can be sampled if required for the environmental permit. Solids loading may be determined in-cell by observing the settling in the sample bottle. A solids settling test will be performed for the first five batches, including VES-WM-187 feed, and once every 50,000 gal thereafter. The general makeup of the waste is well enough understood that results of the samples are not required to process the waste. Historical Tank Farm sample (EDF-8471) results will be used for feed composition to the IWTU since no waste will be added to the Tank Farm between the time the samples were taken and the time the waste is processed through the IWTU. Accordingly, no additional radioactive samples will be needed prior to hot operations.

Assuming there are no process interruptions and assuming the addition of 5% (by volume) water due to steam condensate from jetting the waste from VES-WM-187 and VES-WM-188 to the NWCF (known as jet dilution, VES-WM-189 uses an airlift so there is no jet dilution), the processing of the Tank Farm waste to the tank heel will take 233 days (including 3 days for transition to hot operations) processing at a rate of 2.5 gpm. The amount of down time expected during IWTU tank waste processing was estimated to be 55 days (EDF-8966). An additional 14 days are planned in order to change out the granular activated carbon in the mercury adsorbers once during the campaign. Therefore, the total time

expected to complete processing of the tank waste to the heel volume is 302 days. Processing of this waste produces an estimated 628 canisters.

At the end of tank processing, the end of the first campaign, the consent order will be met and the ICP contractual requirements will be met as defined in the 1992 Notice of Noncompliance/Consent Order (IDHW 1992) since the waste will be "lowered to the greatest extent possible by the use of existing transfer equipment".

4.1.3 Treatment of Tank 187, 188, 189, and 190 Heel and Rinse Liquids

After emptying the tanks to their heel, the four vessels in the INTEC Tank Farm that have not been closed (VES-WM-187/-188/-189/-190) will be washed and the wash water will be processed through the IWTU during the second campaign. This will be done outside of the existing contract and processing details will be determined in other plan documents. The processing of this water is included here for estimation of canister produced and expected durations.

The waste heel in VES-WM-190 (which contains almost no waste and therefore will not need much rinsing) will be rinsed into VES-WM-187 using the techniques and procedures already proven during the cleaning process of other tanks in the INTEC Tank Farm. It is expected to take approximately 10,000 gal of water to rinse the waste heel from VES-WM-190 to VES-WM-187. Following the transfer from VES-WM-190, the waste heel in VES-WM-188 and -189 is transferred to VES-WM-187 using ~50,000 gal of rinse water each. Rinsing of each tank takes about 2 weeks. The transfer of cleaning equipment from Tank VES-WM-190 to VES-WM-188 and from VES-WM-188 to VES-WM-189 is estimated to take 2 weeks each after the preliminary preparation work (for example setup of containment tents, interface risers, aboveground transfer lines, etc.) is complete.

The dilute liquid waste now in VES-WM-187 (combined VES-WM-187/-188/-189/-190 heel plus rinse water) is treated in the IWTU. Treatment of the rinse liquids is much like the processing of tank waste except that it is shorter in duration because the waste volume is smaller. In addition, because the waste is more dilute, the number of solid product canisters produced is greatly reduced.

Treatment of the liquid portion of the dilute waste in VES-WM-187 requires about 42 days to process at 2.5 gpm and produces an estimated 28 canisters.

4.1.4 Treatment of Tank 187, 188, and 189 Heel Solids

In the final part of the second campaign, the solid waste heel in VES-WM-187 (a combination of the heel solids from all three waste tanks) are removed and the tank is cleaned in a manner similar to that of the other two tanks with the exception that the rinse solution is directed to the NWCF Blend and Hold tanks.

It is estimated that 120,000 gal of rinse water are required to complete the rinse of VES-WM-187. The time required processing at 2.5 gpm is about 38 days. This campaign produces an estimated 26 canisters. The waste left in the DMR and CRR at the end of process will also need to be put in canisters. The remaining DMR and CRR bed will fill approximately six canisters.

4.2 Product Shipment and Storage

The solid product waste canisters are produced at the rate of 2.4 to 2.8 canisters per day while processing waste feed from the Tank Farm at a rate of 2.5 gpm. The rate reduces when processing the rinse solutions for tank cleaning to ~0.7 canisters per day. The actual rate is dependent on the solids content of the waste and the feed rate of SBW. These changes in canister production rate are included in the plan shown in Figure 1.

It is assumed that the IWTU will not ship to an offsite disposal facility until some time after the completion of the contract at the end of calendar year 2012. Therefore, all canisters will be stored in the IWTU product storage building for the duration of the current contract.

4.3 Process Consumables

The current version of the SBW treatment mass and energy balance model (PLN-2547, "Software Management Plan for Mass and Energy Balance for the IWTU") was run in seven modes to provide the information on the quantities of process additives and consumables needed for process operation. The results are shown on the bottom of Figure 1. The seven modes were:

1. Treatment of 10,000 gal of VES-WM-188 blended waste at 2.5 gpm
2. Treatment of VES-WM-187 and VES-WM-188 combined waste at 2.5 gpm
3. Treatment of VES-WM-187 and VES-WM-189 combined waste at 2.5 gpm
4. Treatment of remaining VES-WM-189 waste at 2.5 gpm
5. Treatment of rinse water from VES-WM-188/-189/-190 at 2.5 gpm
6. Treatment of rinse water for from VES-WM-187 at 2.5 gpm.

The models were based on the schedule in Figure 1 and the results are recorded on a monthly basis. The major process additives and consumables tracked include: alumina and aluminum hydroxide for bed makeup of the CRR, coal and coke carbon for reduction of nitrate and production of process heat, water for cooling, steam for bed fluidization, nitrogen for various purges and solids transfers, and oxygen and air for reactions.

4.4 Sensitivity of Schedule and Containers Count to Process Feed Rate

The feed rate assumed for the schedule shown in Figure 1 was 2.5 gpm for the entire processing mission of the IWTU. A feed rate of 3.5 gpm is considered possible based on pilot test results and design parameters. The lowest expected feed rate is half the average, i.e., 1.25 gpm. Feed rate affects both schedule and container count. The container count is affected because the additives required to keep the reformers at temperature produce a solid that is included in the waste product. For example, at lower feed rates, more additives are used per kilogram of feed, so the container count increases.

At a feed rate of 1.75 gpm, the number of canisters is ~2.0% greater than for a feed rate of 3.1 gpm. Thus, not only does a lower feed rate increase the processing time, it also increases the number of canisters.

4.5 Canister Count Uncertainty

Canister count is sensitive to several variables beyond the change in feed rate mentioned in Section 4.4. Canister fill level, product density, presence of fines in the process of creating the product and compaction of solids in the canister are the dominant variables that affect canister count.

The system plan's canister count assumes that the canisters will be filled to 95% of capacity on average. The level sensor permits sensing a fill level to 96%, and thus 95% fill should be readily achievable. There may be an occasional canister that could be filled to less than 95%. It is possible that a small fraction will be filled to less than "capacity" due to operational interruptions. If all canisters were filled to 96%, the canister count would be reduced by seven canisters.

The number of canisters that will be produced is also highly dependent on the bulk density of the solids in the canister when it is packed. The nature of the steam reforming process is such that during the process the density of the product experiences small variations on a continuous basis, i.e., samples taken at different time are expected to have different densities. Results from the Hazen tests indicate that the average density of the product at the maximum expected coal concentration is 82.5 lb/ft^3 (see below for the discussion on coal concentration). For lower coal concentrations, the average density will be higher. The system plan's canister count assumes a packed bulk density of 82.5 lb/ft^3.

The amount of fines produced by the steam reforming process may impact the bulk density of the waste. While the pilot plant tests were conducted with a process and surrogate representative of the waste in the SBW tank and process in the full plant, it is possible that the full plant may have more fines. A significantly larger percentage of fines than seen in the test can result in lower bulk density. Test results indicate that for the expected range of ratios of the Mass of DMR Product to Mass of Fines, the density of the product is essentially unaffected (TTT 2006, Figure 7-30). On the other hand, if the fines in the full scale DMR process are substantially in excess of the amount seen in the Hazen tests, the density of the product can be decreased. The test report shows that the product can be compacted by tapping. The IWTU plans to vibrate the canisters to provide compaction. Further, the dead weight of the solids as the canister is filled also serves to compact the material already charged into the canister. To bound the possible effect of both compaction and presence of fines, a decrease in bulk density from 82.5 lb/ft^3 to 81 lb/ft^3 has been postulated, which would increase the canister count by 17 canisters.

Another key process variable affecting canister count is the concentrations of carbon in the DMR product. The carbon inventory in the DMR is crucial to NO_x destruction in the IWTU. This plan assumes the carbon concentration will be 20 wt%. It is believed that running at 18 wt% carbon in the DMR would create a sufficient reducing environment in the DMR to achieve NO_x destruction goals due to an increase in the residence time in the full scale IWTU unit compared to the pilot plant tests. Reducing the carbon concentration from 20 wt% to 18 wt% would reduce the canisters count by 17 canisters.

In conclusion, the system plan calculates that 688 canisters will be the most likely number produced during hot operation of the IWTU (including Tank Farm washing) of which 628 are produced during the IWTU contract period. This number is based on the 82.5 lb/ft^3 bulk density of the product, a bounding carbon concentration of 20%, a canister fill level of 95%, and a conservative value for heat losses from the vessels and piping. A total of 704 canisters can be accommodated in the storage capacity

provided. These spaces are sufficient to account of all waste produced during the IWTU contract including accounting for the potential increases such as variations due to bulk density and fines uncertainty (17 canisters), and variations in fill level (estimated to be a maximum of five canisters). It is possible that additional space will be needed to handle canisters produced during washing of the tanks.

5. KEY SCHEDULE ISSUES AND ASSUMPTIONS

Many key issues were considered in the development of the plan. This section addresses many of those issues and presents the overall status of the Steam Reforming Project relative to those issues. Key assumptions that affect the plan are discussed. Over time, the number of assumptions will decrease as various process optimization studies are completed and the design is finalized. Conclusions and recommendations from optimization studies will be incorporated, as appropriate, into the final system plan.

5.1 Production/Characterization/Sampling Steps are Identified and Integrated into System Plan

Historical sampling and analysis data for the SBW in all three tanks (VES-WM-187, -188, and -189) is available and the results have been documented (see ICP 2005, INEEL 2004, Millet 2005). Additional samples were taken in 2007 and the results have been documented (see EDF-8471). The current SBW treatment flowsheet is based upon the most recent sample results for all elements that were measured. Historical information is still used for magnesium as reported in Millet 2005 since it was not measured during the 2007 sampling effort. Some changes (concentration of some wastes and mixing of others) have occurred to some of the Tank Farm wastes since the original flowsheet-basis samples were taken. The waste composition was determined to have not changed significantly enough from the original flowsheet samples to affect any process design parameters. These minor changes are incorporated in the current schedule.

Characterization of batches of liquid fed during steam reformer operation, dose measurements, weight of the final product canisters, and process knowledge will be used to show that the final solid product meets disposal site waste acceptance criteria. While provisions were made for sampling the NWCF Blend and Hold tanks, sampling of each waste batch in NWCF may not be required. The project is proposing that based on sampling of the VES-WM-187, -188, and -189 tanks, the variations of solids loading, and process knowledge; there is sufficient acceptable knowledge to meet the waste acceptance requirements of the waste facility used for final disposal of the filled canisters. Sampling and analysis of the final solid product is not anticipated at this time although the baseline design does include solids samplers for both product receivers in the IWTU.

5.2 Assumed Throughput and Production Efficiencies are Defined and Reasonable

The assumed waste processing rate of 2.5 gal per minute, process equipment sizing, and the process availability assumption are reasonable. The ability of the steam reforming system to process at rates up to 3.5 gpm has been shown through pilot plant testing (TTT 2006). The process availability assumption is documented in the “IWTU Online Time Analysis” (EDF-8966).

The number of waste canisters to be filled is based on results from pilot plant testing, historical waste sampling data, waste processing rates, and process knowledge. The waste-canister-related assumptions are reasonable based upon the data available. It is currently assumed that no canisters produced at the IWTU will be shipped offsite until after the completion of the IWTU contract at the end of Fiscal Year 2012.

The vault storage capacity is adequate for the amount of waste processed with very little excess capacity available without expanding the existing facility.

Assumptions related to the operation of existing INTEC equipment, such as the amount of heel left in an empty tank, the time to transfer waste, amount of waste generated when cleaning tanks, ability to sample waste, etc. are based upon experience with such equipment at INTEC.

5.3 Assumptions are Supported by Time and Motion Studies, Calculations, and Operating Experience

The assumptions regarding flowsheet and processing rates of the steam reforming process are supported by process design calculations, pilot plant testing, and operating experience at the Erwin facility. A time and motion study on the use of the crane used to move product canisters has been conducted to assure the crane is available and can perform all of its required functions at the times required to fulfill its mission (WGI 2006).

5.4 Resource Requirements for Each Step Identified

The raw materials and chemical additives necessary to operate the SBW treatment facility have been identified and are presented on Figure 1 (bottom portion). The detailed design provides suitably sized tanks, piping, etc. to assure there is adequate storage and surge capacity of these resources at INTEC to support continuous (24/7) operation of the SBW treatment facility. The design considers the frequency of delivery schedules, possible delays due to adverse weather conditions, availability of the necessary additives, etc.; and necessary surge capacity is incorporated into the design.

Personnel resources will also be evaluated as the project progresses. A variety of personnel will be needed to operate the steam reforming facility. These include both full- and part-time personnel from operations, maintenance, engineering, safety, management, training, etc. The current plan calls for round-the-clock operation of the SBW treatment facility for extended periods of time (several months). This schedule is similar to that of other major processes that have operated at INTEC in the past. Personnel requirements are anticipated to be similar to other major INTEC facilities, such as NWCF, that have operated on round-the-clock schedules in the past. Many of the experienced personnel currently working at INTEC will likely be assigned to operate and support the SBW treatment facility. Although finalization of the personnel assignments will not occur until the design is much nearer completion, no personnel-related resource problems are anticipated, based upon previous, similar, INTEC experience.

5.5 Failure/Reject Rate Assumptions Documented and Supported

Based upon experience with the Erwin facility, very few, if any, failures or solid product rejects are anticipated. If a canister fails off-Site disposal waste acceptance criteria for fissile gram equivalent or canister dose, the design provides for vacuuming out the canister and blending the solids with other, more dilute product.

5.6 Equipment and Material Needs Including Availability and Reliability Defined

The design identifies the basic equipment needed to operate the process. The project has completed an online time analysis of the SBW treatment process equipment (EDF-8966). Based upon the results of this analysis, the project changed some design details and will provide spare parts and equipment (online or in a warehouse) to assure the process equipment remains operable or can readily be repaired and returned to service. In addition, the design provides means to access equipment that is deemed at risk to fail, so the equipment can be maintained, repaired, or replaced.

The project has already identified the material such as chemical additives, utilities, etc. needed for SBW treatment. These material needs are given in Figure 1. The detailed design provides suitably sized tanks, piping, etc. to assure there is adequate storage and surge capacity of these materials at INTEC to support continuous (24/7) operation of the SBW treatment facility. The design considers the frequency of delivery schedules, possible delays due to adverse weather conditions, availability of the necessary additives, etc. and incorporates necessary surge capacity.

5.7 Initial Production Plan Formulated

This document contains the current production plan. The plan contains a schedule of operation with a timeline showing when waste from each tank will be processed, the amount of time required for each tank of waste to be processed, the raw materials required for processing, and the number of product canisters produced and stored at the IWTU prior to final disposal. This schedule is adequate for the current level of design, but will be updated as required based on changes to the IWTU design or schedule.

5.8 Design Approach has Optimized Processing and Production Objectives Considering Spare Capacity

The amount of SBW to be processed is known. The SBW to be processed already exists and very little additional waste will be generated in the future. Thus there is no need for spare capacity to meet future unforeseen demands or production increases, or for similar reasons that typically justify spare capacity.

The entire SBW processing campaign is scheduled to last approximately 302 days (see Table 1). The design life of the SBW treatment portion of the facility is 5 years. Thus there is no need for spare capacity to enable the treatment process to run for extended periods of time (many years) when a given unit or portion of a unit fails, as extended operation for the SBW treatment portion of the facility is not planned.

Some spare capacity has been included in the process equipment design. For example, there are three waste feed nozzles to the DMR, when only two are required for the design feed rate. However, in general, the SBW waste treatment design has optimized processing and production objectives by including very little spare capacity. By so doing, the amount of equipment, piping, wiring, valves, construction work, space requirements, facility size, etc. has been minimized. This meets the production objective of processing the SBW in a timely manner, while minimizing the cost of the waste treatment facility.

5.9 Volume of Newly Generated Liquid Waste (NGLW) will have Minor Impacts on IWTU Operations and Canister Count

The IWTU contract (DOE-ID 2005) requires the IWTU to be able to process NGLW. However, estimates for the quantity of NGLW that will be produced, as well as when the NGLW will be produced, vary greatly. The current assumption is that the quantity will be small (10,000–50,000 gal) and will have a concentration similar to current SBW. It is expected that processing NGLW will add a small number to the total canister count (8–40 canisters). It will also take 6–30 days to process the NGLW through the IWTU. The NGLW will be processed through IWTU as a separate NGLW campaign following processing of the SBW tanks. The final plan for NGLW processing will be made once the quantity of NGLW and schedule for producing NGLW are better defined.

6. REFERENCES

DOE-ID, 2005, Contract No. DE-AC07-05ID14516, "Idaho Cleanup Project," U.S. Department of Energy Idaho Operations Office, March 23, 2005.

EDF-8471, 2008, "VES-WM-187, VES-WM-188, and VES-WM-189 Tank Characterization," Rev. 0, Idaho Cleanup Project, July 2008.

EDF-8966, 2008, "IWTU Online Time Analysis," Rev. 0, Idaho Cleanup Project, October 2008.

ICP, 2005, *Generation, Disposition, and Current Inventory of Radionuclides in the INTEC Tank Farm*, ICP/EXT-05-00928, Rev. 0, Idaho Cleanup Project, June 2005.

IDHW, 1992, "Consent Order to the Notice of Noncompliance," Department of Energy Idaho Operations Office; Idaho Department of Health and Welfare, Division of Environmental Quality; Environmental Protection Agency, Region 10; April 3, 1992.

INEEL, 2004, *Feed Composition for the Sodium-Bearing Waste Treatment Process*, Idaho National Engineering and Environmental Laboratory, INEEL/EXT-2000-01378, Rev. 4, June 2004.

Millet, Clark, ICP, to Scott Roesener, ICP, July 11, 2005, "Confirmation Study of the SBW Characterization Data," Interoffice Memorandum, MIL-05-05.

PLN-2547, 2007, "Software Management for Plan Mass and Energy Balance for the IWTU," Rev. 1, November 13, 2007.

PLN-3298, 2010, "IWTU Comprehensive Performance Test Plan," Rev. 1, March 17, 2010.

SDD-227, 2010, "IWTU–Sodium Bearing Waste Steam Reforming Unit," Rev. 3, Idaho Cleanup Project, January 2010.

TTT, 2006, "Pilot Plant Report for Treating Sodium-Bearing Waste Surrogates Carbonate Flowsheet," Doc. No. RT-ESTD-002, Rev. 1, THOR® Treatment Technologies LLC, August 2006.

WGI, 2006, "Time and Motion Analysis Canister Filling & Decon System Operation," Doc. No. ST-15-005, Rev. B, Washington Group International, May 2006.

APPENDIX D-6

Risk Assessment for Air Emissions from the Integrated Waste Treatment Unit and INTEC Liquid Waste Management System

RPT-354
Revision 1

Risk Assessment for Air Emissions from the Integrated Waste Treatment Unit and INTEC Liquid Waste Management System

April 2007

RPT-354
Revision 1
Project No. 25051

Risk Assessment for Air Emissions from the Integrated Waste Treatment Unit and INTEC Liquid Waste Management System

April 2007

Idaho Cleanup Project
Idaho Falls, Idaho 83415

Prepared for the
U.S. Department of Energy
Assistant Secretary for Environmental Management
Under DOE Idaho Operations Office
Contract DE-AC07-05ID14516

ABSTRACT

This risk assessment evaluates potential human health and ecological impacts due to air emissions from the INTEC Liquid Waste Management System (ILWMS) and the proposed Integrated Waste Treatment Unit (IWTU), both located at the Idaho Nuclear Technology and Engineering Center on the Idaho National Laboratory (INL) Site. Cumulative impacts from other contributing sources (e.g., Idaho CERCLA Disposal Facility [ICDF]) calculated in previous risk assessments are included. U.S. Environmental Protection Agency (EPA) guidance in *Human Health Risk Assessment Protocol for Hazardous Waste Combustion Facilities* was used to evaluate continuous exposure to contaminant air and soil concentrations at on- and off-INL locations where maximum modeled impacts occurred. Both inhalation and ingestion pathways were evaluated with the latter including incidental soil and food product ingestion, including produce, beef, dairy, pork, and poultry/eggs. Four human exposure scenarios were evaluated in addition to an inhalation assessment for motorists on U.S. Highway 20/26 and an acute inhalation assessment at the point of maximum air concentration. Ecological risk was evaluated at the location of maximum contaminant soil concentration using ecologically based screening levels.

The maximum lifetime cancer risk from emissions from the Process Equipment Waste Evaporator, Liquid Effluent Treatment & Disposal facility, and the IWTU is estimated to be 4.8E-08, about 0.5% of the EPA risk target criterion (1E-05). The maximum non-cancer hazard index is estimated to be 0.0089, about 4% of the EPA hazard target criterion (0.25). Cumulative impacts from the Evaporator Tank System and the ICDF, which were calculated in previous risk assessments, increase these estimates to 9E-08 risk (1% of target) and <0.02 hazard index (7% of target). Maximum short-term inhalation impacts on Highway 20/26 are less than State of Idaho toxic air pollutant criteria, and the maximum 1-hour concentrations are less than EPA acute inhalation exposure criteria. The total screening level ecological hazard quotient from all sources is 0.64, compared to a conservative target criterion of 1.0. Uncertainties in these estimates are discussed in detail. These results demonstrate that the IWTU and ILWMS emissions, combined with other potentially contributing INL sources, do not pose a risk to human health or the environment.

CONTENTS

ABSTRACT iii

ACRONYMS ix

1. PURPOSE AND SCOPE 1

2. FACILITY AND SOURCE CHARACTERIZATION 2

   2.1 Facility Location 2

   2.2 IWTU SBW Process Description 2

   2.3 IWTU Emissions 5

   2.4 LET&D and PEWE Emissions 8

   2.5 ETS Emissions 8

   2.6 Other Potentially Contributing Sources 9

3. RISK ASSESSMENT GUIDELINES 10

   3.1 EPA Protocol 10

   3.2 Target Risk Criteria 10

4. AIR MODELING METHODOLOGY 11

   4.1 Control Options Input 11

   4.2 Source Input – IWTU Stack 12

   4.3 Source Input – INTEC Main Stack 12

   4.4 Receptor Grids 13

   4.5 Meteorological Information 14

   4.6 Modeling Runs 15

5. EXPOSURE ASSESSMENT 16

   5.1 Exposure Scenarios 16

   5.2 Exposure Pathways, Media Concentrations, and Intakes 17

6. RISK AND HAZARD CHARACTERIZATION 18

7. ECOLOGICAL RISK ASSESSMENT 18

8. UNCERTAINTY EVALUATION 19

9. RESULTS 19

9.1 Air Modeling 19

9.2 Human Health Impacts 27

9.2.1 Off-INL Public Health Impacts – ILWMS and IWTU 27
9.2.2 Contributions from Other Sources 33
9.2.3 Impacts to Public Motorists 33
9.2.4 Acute Inhalation Risk to a Worker 34
9.2.5 Ecological Risk 36

9.3 Human Health Risk Assessment Uncertainty 37

9.3.1 Uncertainty Associated with COPC Emission Rate Characterization 37
9.3.2 Uncertainty Associated with Air Modeling 38
9.3.3 Uncertainty Associated with Exposure Assessment 39
9.3.4 Uncertainty Associated with COPC Toxicity 39
9.3.5 Uncertainty Associated with Risk Characterization 39

9.4 Ecological Risk Assessment Uncertainty 39

9.4.1 Uncertainty Associated with Exposure Assessment 39
9.4.2 Uncertainty Associated with Ingestion Rates 40
9.4.3 Uncertainty Associated with Uptake Factors 40
9.4.4 Uncertainty Associated with Toxicity Reference Values 40
9.4.5 Uncertainty Associated with Functional Groups 40

10. REFERENCES 40

Appendix A—LET&D and PEWE COPC Offgas Emission Rates 43

Appendix B—Equations and Parameter Values EPA Human Health Risk Assessment Protocol 57

FIGURES

1. Location of the Idaho Nuclear Technology and Engineering Center on the INL Site 3

2. IWTU facility footprint and stack location in the east-central part of INTEC 4

3. ISC3 receptor grids used in the modeling 14

4. Annual-average vapor dispersion pattern (μg/m^3 per g/s, orange contour lines) for the INTEC main stack with maximum off-INL impact location noted..... 22

5. Annual-average vapor dispersion pattern (μg/m^3 per g/s, orange contour lines) for the IWTU stack with maximum off-INL impact location noted..... 23

6. Maximum 1-hour vapor dispersion pattern for the INTEC main stack (μg/m^3 per g/s, orange contour lines) 24

7. Maximum 24-hour vapor dispersion pattern for the INTEC main stack (μg/m^3 per g/s, orange contour lines) 25

8. Maximum 1-hour vapor dispersion pattern from the IWTU stack (μg/m^3 per g/s, orange contour lines) 26

9. Maximum 24-hour vapor dispersion pattern from the IWTU stack (μg/m^3 per g/s, orange contour lines) 27

TABLES

1. IWTU air pollutant emission estimates from EDF-6495..... 6

2. LET&D and PEWE COPCs that accounted for >99.99% of the risk/hazard calculated in previous ILWMS risk assessments..... 9

3. Exposure scenarios and pathways evaluated in the risk assessment 17

4. Unit release (1 g/s) air modeling results for the INTEC main (PEWE/LET&D) and IWTU stacks..... 20

5. Summary of total estimated human health impacts from LET&D/PEWE and IWTU emissions 28

6. Ingestion cancer risk estimates for IWTU emissions 28

7. Non-cancer ingestion hazard quotients for IWTU emissions..... 29

8. Ingestion cancer risk estimates for LET&D/PEWE emissions 30

9. Non-cancer ingestion hazard quotients for LET&D/PEWE emissions..... 31

10. Maximum inhalation health impact estimates for IWTU emissions 31

11. Maximum inhalation health impact estimates for LET&D/PEWE emissions 32

12. Comparison of maximum IWTU 24-hour air concentrations with Idaho Acceptable Ambient Concentrations for non-carcinogens on U.S. Highway 20/26 33

13. Comparison of maximum LET&D/PEWE 24-hour air concentrations with Idaho Acceptable Ambient Concentrations for non-carcinogens on U.S. Highway 20/26 34

14. IWTU acute (1-hour) inhalation impacts for a worker anywhere on the INL Site..... 35

15. LET&D/PEWE acute (1-hour) inhalation impacts for a worker anywhere on the INL Site..... 35

16. Ecological screening level quotients for IWTU COPCs 36

17. Ecological screening level quotients for LET&D/PEWE COPCs 37

ACRONYMS

AAC	acceptable ambient concentration
ACFM	actual cubic feet per minute
AHQ	acute hazard quotient
AIEC	acute inhalation exposure criteria
BAF	(prey) bioaccumulation factor
BPIPPRM	Building Profile Input Program for PRIME
C1p	Maximum 1-hour particulate concentration (µg-second/g-m^3)
C1v	Maximum 1-hour vapor concentration (µg-second/g-m^3)
C24p	Maximum 24-hour particulate concentration (µg-second/g-m^3)
C24v	Maximum 24-hour vapor concentration (µg-second/g-m^3)
CAS	Chemical Abstract Service
CERCLA	Comprehensive Environmental Response, Compensation, and Liability Act
COPC	constituent of potential concern (EPA)
Cp	annual average particulate concentration (µg-second/g-m^3)
CRR	Carbon Reduction Reformer
CSF	cancer slope factor
Cv	annual average vapor concentration (µg-second/g-m^3)
Ddp	annual average dry deposition of particulate (second/m^2-year)
Ddv	annual average dry deposition of vapor (second/m^2-year)
DEQ	Department of Environmental Quality (Idaho)
DMR	Denitration and Mineralization Reformer
DS	stack exit diameter
Dwp	annual average wet deposition of particulate (second/m^2-year)
Dwv	annual average wet deposition of vapor (second/m^2-year)
EBSL	ecologically-based screening level
ED	exposure duration
EDF	Engineering Design File

EL	emission level (IDAPA)
EPA	U.S. Environmental Protection Agency
ETS	Evaporator Tank System
GIS	Geographical Information System
GRD3	Grid 3 meteorological tower
HEPA	high-efficiency particulate air (filter)
HHRAP	Human Health Risk Assessment Protocol (for Hazardous Waste Combustion Facilities)
HI	hazard index
HQ	hazard quotient
HS	stack height
HVAC	heating, ventilating, and air conditioning
HWMA	Hazardous Waste Management Act
ICDF	Idaho CERCLA Disposal Facility
ICP	Idaho Cleanup Project
IDAPA	Idaho Administrative Procedures Act
ILWMS	INTEC Liquid Waste Management System
INL	Idaho National Laboratory
INTEC	Idaho Nuclear Technology and Engineering Center
ISC3	Industrial Source Complex Model - 3
ISC3P	Industrial Source Complex Model - 3 with PRIME downwash
ISC-PRIME	Industrial Source Complex Model with PRIME downwash
ISCST3	Industrial Source Complex Short-Term Model -3
IWTU	Integrated Waste Treatment Unit
LET&D	Liquid Effluent Treatment & Disposal
MASSFRAX	particle mass fraction
NED	National Elevation Data (US Geological Survey)
NOAA	National Oceanic and Atmospheric Administration
NWCF	New Waste Calcining Facility
PARTDENS	particle density

PARTDIAM	particle diameter
PEWE	Process Equipment Waste Evaporator
PM	particulate matter
PUF	plant uptake factor
QA/QC	quality assurance/quality control
RAWP	Risk Assessment Work Plan
RCRA	Resource Conservation and Recovery Act
RfC	reference concentration
RfD	reference dose
RH	remote handled
SBW	sodium-bearing waste
SLERAP	Screening Level Ecological Risk Assessment Protocol
SLQ	screening level quotient (for ecological receptors)
SUF	site use factor
SVOC	semi-volatile organic compound
TAP	toxic air pollutant
TRU	transuranic
TRV	toxicity reference value (ecological receptors)
TS	stack effluent temperature
TSLQ	total screening level quotient
UF	uncertainty factor
URF	unit risk factor
VOC	volatile organic compound
VS	stack exit velocity

Risk Assessment for Air Emissions for the Integrated Waste Treatment Unit and INTEC Liquid Waste Management System

1. PURPOSE AND SCOPE

This risk assessment evaluates the potential human health and ecological impacts from process operations of the Idaho Nuclear Technology Center (INTEC) Liquid Waste Management System (ILWMS) and the new Integrated Waste Treatment Unit (IWTU) facility that is proposed at INTEC on the Idaho National Laboratory (INL) Site. The IWTU utilizes a steam reforming process for treating INTEC sodium-bearing waste (SBW) and newly-generated liquid wastes. IWTU site preparation began in April 2007, and the start of operations is scheduled in December 2009.

The IWTU will be permitted under the Hazardous Waste Management Act (HWMA)/Resource Conservation and Recovery Act (RCRA) as a Class 3 (most significant) Permit Modification Request and Request for Temporary Authorization to the existing HWMA/RCRA Permit for the INTEC Liquid Waste Management System (Volume 14). This action is consistent with existing language in the Permit, which describes the current ILWMS treatment units as part of an overall treatment train for liquid wastes stored at INTEC. The IWTU is the final unit in the overall ILWMS treatment system and will be used to convert SBW and newly-generated liquid waste into a solid treatment product that is suitable for ultimate disposal. The methodology and assumptions used in this risk assessment were submitted in a Risk Assessment Work Plan (RAWP) to the Idaho Department of Environmental Quality (DEQ) as part of the Volume 14 Permit Modification Request, Appendix D-6, in December 2006.

There are currently three processes that operate within the ILWMS that have potential air pollutant emissions: (1) the Liquid Effluent Treatment & Disposal Facility (LET&D), (2) the Process Equipment Waste Evaporator (PEWE), and (3) the Evaporator Tank System (ETS). Cumulative impacts from these sources, and those from the Idaho CERCLA Disposal Facility (ICDF), a potentially contributing source adjacent to INTEC, were previously evaluated in the *Human and Ecological Risk Assessment of Air Emissions from the INTEC Liquid Waste Management System* (ICP 2004). Since then, new offgas measurements were obtained for LET&D and PEWE in 2005 and revised human health impacts were calculated in EDF-6252. This risk assessment therefore evaluates air emissions from the following sources:

1. IWTU – risks calculated from modeled (mass and energy balance) emission estimates (EDF-6495), which incorporate the findings from actual emissions measurements during pilot-scale testing

2. LET&D/PEWE – risks calculated from 2003 and 2005 offgas sampling emission estimates (ICP 2004; EDF-6252)

3. ETS – previously-calculated risk contribution taken from INEEL 2002 and the 2004 ILWMS risk assessment (ICP 2004)

4. ICDF – previously-calculated risk contribution taken from ICP 2004.

Both human health and ecological impacts are evaluated. Maximum human health impacts (cancer risk and non-cancer hazard index from both inhalation and ingestion) were evaluated at the off-INL Site locations with the highest modeled air concentrations and deposition rates. Impacts were assessed separately for each of the ILWMS sources, which are released from the INTEC main stack, and the

IWTU emissions, which will be released from a separate IWTU stack. The maximum impacts of emissions from these two separate stacks, which occur at slightly different locations, were then added to obtain a conservative estimate of maximum cumulative impacts from ILWMS and IWTU emissions. In addition, maximum inhalation impacts for an on-site worker and a public motorist on U.S. Highway 20/26 were evaluated. Impacts to ecological receptors were evaluated at the downwind locations of maximum modeled deposition rate, which occurred on-site. Only atmospheric emissions of non-radiological contaminants of potential concern (COPCs) were evaluated.

2. FACILITY AND SOURCE CHARACTERIZATION

2.1 Facility Location

The IWTU will be located in the east-central part of INTEC on the INL Site (Figures 1 and 2). The facility consists of three interconnected buildings (Figure 2): (1) product storage area, (2) mechanical equipment area, and (3) process area, which houses the SBW steam reforming processes and the heating, ventilating, and air conditioning (HVAC) equipment. The complete facility is approximately 380-ft long (north-south) by 198-ft wide (east-west). The ridge height of the process building is 69 ft. All offgas is routed to a single 120-ft high stack on the southwest corner of the building. Specific building and stack dimensions are addressed in Section 4, Air Dispersion and Deposition Modeling.

2.2 IWTU SBW Process Description

Approximately 900,000 gallons of mixed liquid waste, containing both hazardous and radioactive components, are stored in three 300,000-gallon tanks at the INTEC Tank Farm Facility. This waste is collectively known as sodium-bearing waste (SBW). The IWTU will use a steam reforming process to treat this waste. The specific steam reforming technology is a thermal, fluidized-bed process that uses superheated steam, carbon, and other additives to convert the SBW into a solid granular product that is packaged in canisters suitable for ultimate disposal.

The steam reforming process for the IWTU consists of two steam reformers that are integrated into a single process system (Drawings 632750, 632753, 632754 in Appendix III to the ILWMS Permit – Volume 14). The system converts the SBW into a dry, solid, mineral product suitable for ultimate disposal as remote-handled TRU waste. The steam reforming process includes a feed collection and transfer system through which waste from the Tank Farm is transferred into the first of two steam reformers, the Denitration and Mineralization Reformer (DMR). The DMR contains a hot (580–700°C) fluidized bed. The bed particles are fluidized by superheated steam. The superheated steam and a small amount of added oxygen react with carbon (a process additive) to produce process heat and a strong chemically reducing environment. The liquid waste is sprayed into the fluidized bed where it evaporates. As the waste evaporates in the DMR, the dissolved constituents form additional bed material that is eventually removed as solid treatment product. The DMR destroys organics, nitric acid, nitrates, and nitrites in the feed, and converts the bulk of the dissolved chemicals into a solid, mineral product. The DMR converts organics in the waste into carbon monoxide (CO), carbon dioxide (CO_2), hydrogen (H_2), and short-chained organic molecules such as methane (CH_4). The strong reducing environment inside the DMR transforms nitrates, nitrites, and nitric acid into elemental nitrogen. Nitrogen oxide (NO_X) formation is minimal. The DMR converts most of the dissolved constituents in the waste into a mineral form, comprised primarily of carbonates and oxides and transforms alkali metals such as sodium (Na) and potassium (K) into compounds that will not agglomerate at the operating temperature of the fluidized bed.

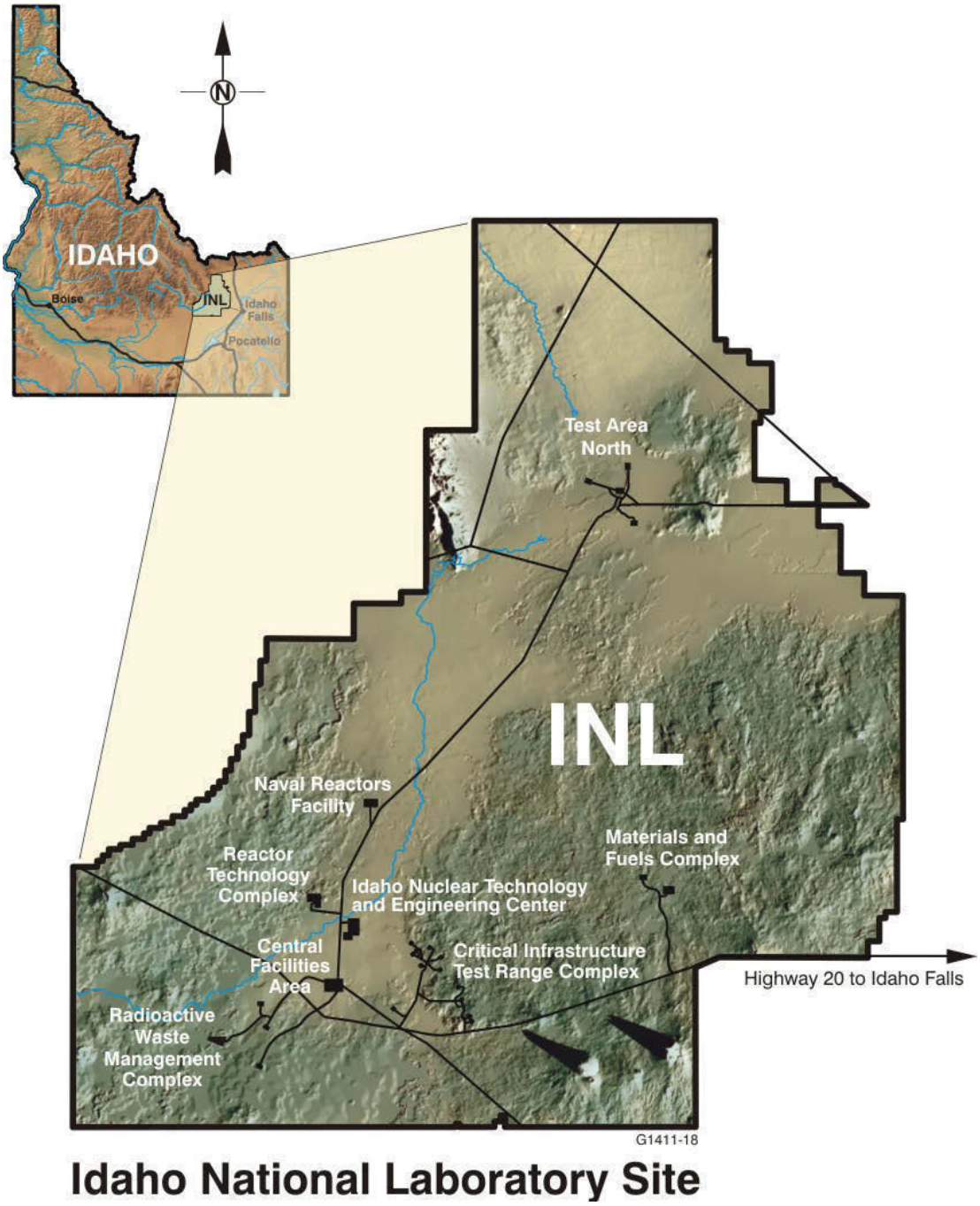

Figure 1. Location of the Idaho Nuclear Technology and Engineering Center on the INL Site.

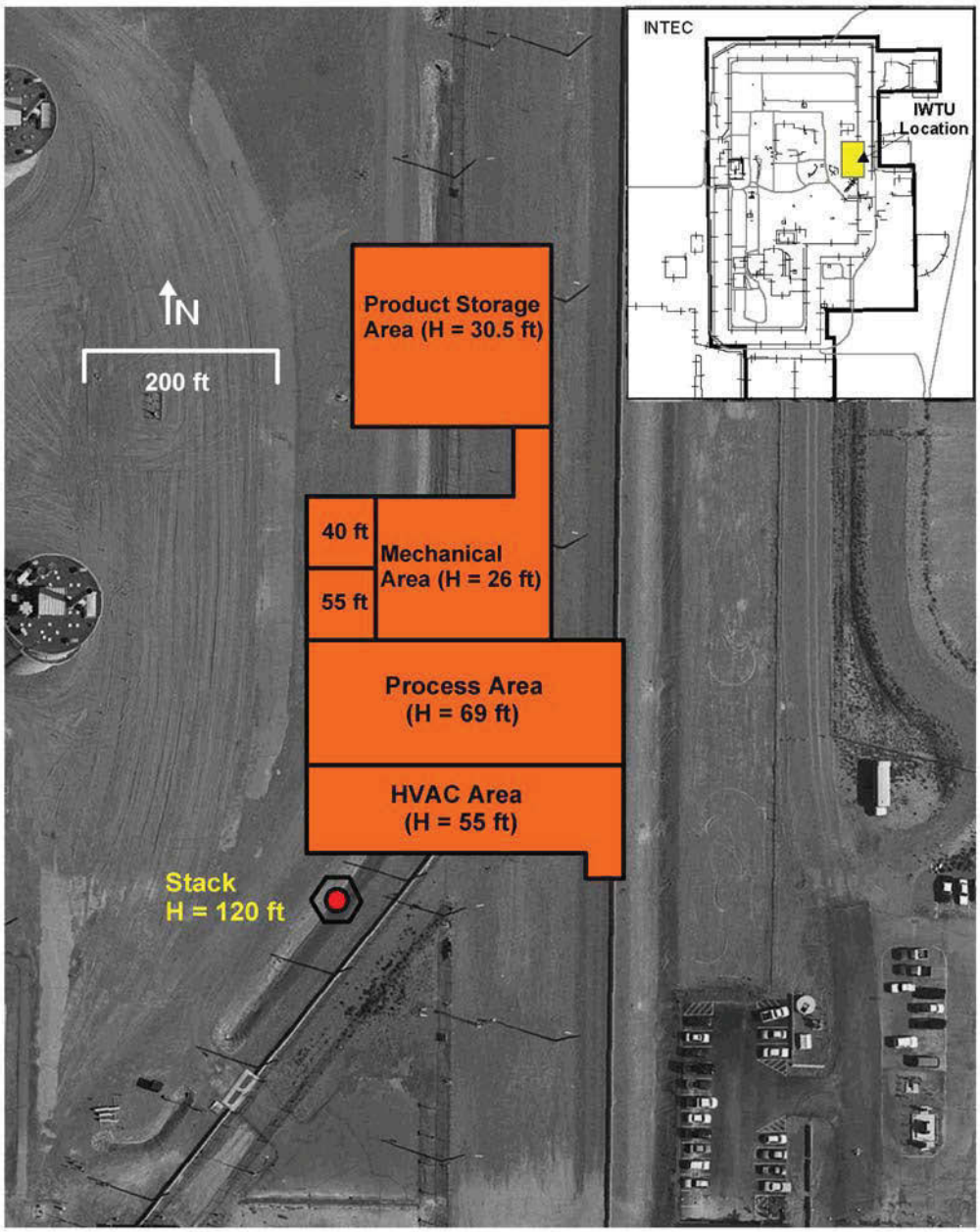

Figure 2. IWTU facility footprint and stack location in the east-central part of INTEC (building tier heights noted; stack location revised January 2007).

Process gas from the DMR goes through a sintered-metal (process) filter that removes fines. The fines are periodically removed from the filter and combined with the solid treatment product from the DMR for product packaging. The filtered process gas then flows to the Carbon Reduction Reformer (CRR) which operates at a higher temperature (775 to 1150°C) than the DMR and contains a semi-permanent fluidized bed of alumina particles. The bottom of the CRR operates in a reducing mode to convert residual NO_X from the DMR to nitrogen gas. Oxygen is added in the upper section of the bed to change from a reducing to oxidizing mode. The H_2, CO, and short-chained organics in the DMR process gas are oxidized to CO_2 and water in the CRR. Gases from the CRR (mainly oxygen, carbon dioxide, nitrogen, and water vapor) are cooled and sent through a high-efficiency sintered metal (offgas) filter and then routed to an offgas treatment system consisting of two high-efficiency particulate air (HEPA) filters (plus prefilter), a sulfur-impregnated, granular-activated-carbon mercury adsorber, and vented to the atmosphere through a dedicated stack. The treatment product from the DMR, CRR, and sintered metal filters is removed, cooled, and pneumatically transferred to a solid product packaging station. At the packaging station, the product is loaded into remote-handled disposal canisters.

2.3 IWTU Emissions

The major components in the IWTU offgas were estimated using mass and energy balance modeling to be non-hazardous nitrogen, water vapor, carbon dioxide, and oxygen. These components were verified through pilot-scale testing with SBW surrogate feed. Emission rates for potentially hazardous compounds (Table 1) were taken from EDF-6495. The criteria pollutant emission rates in Table 1 are conservative annual-average values for processing all tank waste, with an additional 40% added to account for other wastes that may be processed through the IWTU such as start-up testing surrogate and decontamination solution. For particulate matter (PM) and lead (Pb), the emissions take credit for the two process HEPA filters at a removal efficiency of 99.97%, which is the DOE standard for HEPA filters (*Specification for HEPA Filters Used by DOE Contractors*, DOE-STD-3020-2005).

Table 1 also lists potential toxic air pollutant (TAP) emissions from IWTU as defined by IDAPA 58.01.01, Sections 585 and 586, and as calculated in EDF-6495. These rates are the most conservative of seven different SBW tank processing mixture scenarios and represent upper-bound emission estimates. For comparison, the IDAPA screening emission level (EL), a conservative first-level screening criteria, is also listed in the table. Arsenic, beryllium, and hydrogen chloride exceed the IDAPA EL. This suggests that these pollutants may need to be examined more closely in the risk assessment, not necessarily that they are emitted at rates that are hazardous. No organic constituents are listed because the mass and energy balance calculations indicate that the IWTU process efficiently destroys essentially all organics in the SBW feed. Pilot plant demonstrations at the Hazen Research Facility (Golden, Colorado) support this conclusion. If future test results indicate that additional compounds may be emitted at rates which could significantly contribute to the total emissions risk, then IWTU emission rates will be revised as appropriate and re-evaluated for risk.

Table 1. IWTU air pollutant emission estimates from EDF-6495.

Criteria Pollutants	Emission Rate[a] (tons/year)	Emission Rate (lb/hr)	Emission Rate (g/s)
Carbon Monoxide (CO)	1.44	0.329	0.041
Nitrogen Oxides (NO_X)	31.77	7.25	0.914
Sulfur Dioxide (SO_2)	5.2	1.19	0.150
Particulate Matter (PM)	3.37E-09	7.69E-10	9.70E-11
Lead (Pb)	1.04E-13	2.37E-14	2.99E-15
Fluoride (F)	0.06	0.014	0.0018

Toxic Air Pollutants	IDAPA Emission Level (EL, in lb/hr)[b]	Annual-Average (lb/hr)[c]	Annual-Average (g/s)	Maximum Short-term (lb/hr)[d]	Maximum Short-term (g/s)
Aluminum (Al)	1.33E-01	5.18E-12	6.53E-13	1.52E-06	1.92E-07
Arsenic (As)	1.50E-06	3.16E-04	3.99E-05	9.42E-04	1.19E-04
Barium (Ba)	3.30E-02	1.16E-02	1.46E-03	1.95E-02	2.46E-03
Beryllium (Be)	2.80E-05	2.02E-04	2.55E-05	3.03E-04	3.82E-05
Bromine (Br_2)	4.70E-02	4.29E-05	5.41E-06	6.10E-05	7.69E-06
Cadmium (Cd)	3.70E-06	1.55E-10	1.95E-11	1.26E-08	1.59E-09
Calcium oxide (CaO)	1.33E-01	2.37E-12	2.99E-13	4.76E-07	6.00E-08
Chlorine (Cl_2)[e]	2.00E-01	1.57E-02	1.98E-03	6.14E-02	7.74E-03
Chromium (Cr)	3.30E-02	3.21E-14	4.05E-15	7.29E-09	9.19E-10
Fluorine (F_2)	1.67E-01	2.16E-02	2.72E-03	1.07E-01	1.35E-02
Hydrogen chloride (HCl)[e]	5.00E-02	1.62E-02	2.04E-03	6.32E-02	7.97E-03
Mercury (Hg)	3.00E-03	2.21E-04	2.79E-05	3.23E-04	4.07E-05
Molybdenum (Mo)	3.33E-01	3.25E-02	4.10E-03	4.81E-02	6.07E-03
Nickel (Ni)	2.70E-05	9.32E-15	1.18E-15	2.04E-09	2.57E-10
Rhodium (Rh)	1.00E-03	6.53E-04	8.24E-05	9.28E-04	1.17E-04
Selenium (Se)	1.30E-02	1.11E-04	1.40E-05	1.58E-04	1.99E-05
Silver (Ag)	1.00E-03	4.04E-04	5.09E-05	7.76E-04	9.79E-05
Tin (Sn)	1.33E-01	9.19E-03	1.16E-03	1.05E-02	1.32E-03
Zinc (Zn)	6.67E-01	7.15E-15	9.02E-16	2.01E-09	2.53E-10

a. From EDF-6495, Table 2 (abated emissions).
b. First-level TAP screening level from IDAPA 58.01.01 Sections 585 and 586 – does not imply an emission rate that is hazardous.
c. From EDF-6495 (Table 5, Scenario 1); assumes 1-year processing time, average composition of all SBW, and an additional 10,000 gallons of newly generated waste (NGLW) at the composition of Tank WM-187.
d. Highest emission rate for seven different SBW tank processing mixture scenarios, as calculated in EDF-6495.
e. Assumes all of the chlorine emissions are in this form.

The following assumptions were made in EDF-6495 to calculate the emission rates shown in Table 1:

- The waste is fed to the DMR at the maximum rate of 3.5 gallons per minute (gpm) to maximize the emissions rate.

- The particulate carry-over from the DMR was increased from 30% (expected carry-over) to 50% (worst case carry-over seen during testing at the STAR center as reported in *Phase 2 THOR Steam Reforming Tests for Sodium Bearing Waste Treatment*, [INEEL 2004a]).

- The NO_X carry-over in the DMR was increased from 3% to 7% to reflect data from pilot plant testing data (RT-ESTD-PMR-001).

- The NO_X carry-over in the Carbon Reduction Reformer (CRR) was increased from 10% to 50% to reflect data from pilot plant testing data (RT-ESTD-PMR-001).

- To more accurately reflect carbon monoxide emissions from the IWTU as seen in the pilot plant test data (RT-ESTD-PMR-001) the carbon dioxide to carbon monoxide ratio in the offgas of the DMR was increased from 92% to 97%. Additionally, the CO carry-over of carbon monoxide from the CRR was increased from 0.1% to 3%.

- The mercury concentration was increased by 25% to increase it to the high end of the analytical uncertainty as reported in *Feed Composition for the Sodium Bearing Waste Treatment Process*, (INEEL 2004b).

- The mercury removal efficiency was reduced from 99.999% to 99.99% based on the minimum required removal efficiency per the mercury adsorber equipment data sheets *Equipment Data Sheets – Mercury Adsorber*" (COS-F-SRH-0141).

- The HEPA filters efficiency was increased to 99.97% to match the DOE standard for HEPA filters (*Specification for HEPA Filters Used by DOE Contractors*, DOE-STD-3020-2005). For annual-average emissions calculations, credit was taken for both HEPAs. For maximum short-term emission rates, credit was taken for only one HEPA. No credit was taken for solids removal through the HEPA prefilter.

For facilities without site-specific monitoring data, EPA 2005 recommends that organics and metal emissions be increased by factors of 2.8 and 1.45 respectively, to account for potential increases in emissions due to process upset conditions. Although process upsets are not currently anticipated at IWTU due to the stable, uniform operating characteristics of the fluid bed systems, the potential increase in emissions, and therefore downwind impacts, is quantified and discussed in the uncertainty section.

For assessing the indirect (i.e., ingestion) risk from buildup of contaminants in the environment, the IWTU emissions are assumed to last for 15 years. This is very conservative because all of the SBW is expected to be processed by the IWTU within 15 months. Aluminum, fluoride, and manganese were only evaluated for inhalation impacts because they are not in the *Human Health Risk Assessment Protocol for Hazardous Waste Combustion Facilities* (HHRAP) (EPA 2005) data base.

2.4 LET&D and PEWE Emissions

The COPCs emission estimates for the LET&D and PEWE were developed from offgas measurements in 2003 (INEEL 2003) and 2005 (ICP 2005a; ICP 2005b) and are contained in Appendix A. These emissions were previously evaluated for risk in the 2004 ILWMS risk assessment (ICP 2004), using the 2003 offgas measurements, and revised in EDF-6252 using the 2005 offgas measurements. These assessments evaluated all analytes that met one or both of the following conditions: (1) sampling results were greater than the quantification limit in at least one of the sampling runs or (2) fate, transport, and toxicity data are published by EPA (EPA 2005). Analytes were excluded from risk evaluation if all of the sampling data were less than the quantification limit and no compound-specific modeling and toxicity data were available in EPA 1998a. All SVOC and VOC analytes that were detected at greater than the quantification limit were evaluated for risk.

The risk assessment methodology in the previous ILWMS risk assessments (ICP 2004; EDF-6252) used COPC-specific "risk coefficients" developed for New Waste Calcining Facility (NWCF) emissions from the INTEC main stack (INEEL 1999a; INEEL 1996). These NWCF risk coefficients were developed using EPA risk assessment guidance and contaminant-specific parameter values available at that time. Since then, EPA has published a final version of the HHRAP and provided revised transport and toxicity data in an on-line companion data base: (http://www.epa.gov/epaoswer/hazwaste/combust/risk.htm). For this risk assessment, PEWE, LET&D, and IWTU COPC risks were recalculated using the new 2005 EPA HHRAP methodology and parameter values. For PEWE and LET&D, only those COPCs which contributed at least 0.01% of the total risk or hazard (i.e., individual COPC risk ≥ 1/10,000 of the total risk) as calculated in the previous ILWMS risk assessments were re-evaluated. This allows available resources to be focused on refined modeling of those COPCs that have been shown to be "of potential concern" (based on previous risk calculations) while eliminating those COPCs that are either artifacts of the sampling/analytical process, non-hazardous, or emitted in extremely low, insignificant quantities. The screened LET&D and PEWE COPCs and their emission rates are listed in Table 2.

2.5 ETS Emissions

ETS offgas emission estimates are documented in the *NWCF Evaporator Tank System 2001 Offgas Emissions Inventory* (INEEL 2002) and are only summarized here. More analytes were "detected" from the ETS (15/18 metals, 45/69 SVOCs, 18/65 VOCs) than the LET&D. However, many of these "detections" were only in the back portion of the sampling train (condensate fraction) and not in the front (XAD resin) portion, indicating that they are probably analytical artifacts rather than present in the offgas. Even using these "partial hit" values, emission rates from ETS were very low. The two highest volatile organics emitted during offgas sampling were dodecane and acetone, 50 parts per billion by volume (ppbv) and 30 ppbv, respectively. The two highest semi-volatile organics emitted were benzoic acid and benzaldehyde with maximum concentrations of 310 ppbv and 80 ppbv, respectively. The sum of all volatile and semi-volatile organics was less than 1 ppmv.

Human health risk assessments of these emissions were previously completed in INEEL 2002 and ICP 2004. These risk assessments used the previously described NWCF-calculated risk and hazard coefficients (e.g., risk per g/s released) and conservative emission rates from the ETS offgas measurements. In accordance with the Risk Assessment Work Plan (RAWP), the ETS risk contribution to ILWMS and IWTU was taken directly from INEEL 2002, rather than recalculated in this risk assessment.

Table 2. LET&D and PEWE COPCs that accounted for >99.99% of the risk/hazard calculated in previous ILWMS risk assessments.[a]

Analyte	CAS#	Emission Rate (g/s) Hourly	Emission Rate (g/s) Annual
Anions			
Hydrogen chloride (HCl)	7647-01-0	1.97E+00	4.50E-01
Fluoride (F^-)[b]	16984-48-8	1.33E-03	3.04E-01
Metals			
Arsenic (As)	7440-38-2	1.82E-06	4.16E-07
Chromium (Cr)[c]	7440-47-3	5.32E-04	1.21E-04
Manganese (Mn)[b]	7439-96-5	8.01E-05	1.83E-05
Nickel (Ni)	7440-02-0	3.04E-03	6.94E-04
Mercury (Hg)	7439-97-6	6.84E-05	1.56E-05
SVOCs			
Benzo(a)pyrene (BaP)	50-32-8	2.44E-06	5.57E-07
bis(2-Ethylhexyl) phthalate	117-81-7	2.62E-05	5.98E-06
3,3'-Dichlorobenzidine	91-94-1	6.32E-06	1.44E-06
Fluoranthene	206-44-0	8.67E-07	1.98E-07
Hexachlorocyclopentadiene	77-47-4	7.41E-06	1.69E-06
N-Nitrosodi-n-propylamine	621-64-7	9.94E-07	2.27E-07
N-Nitrosodimethylamine[d]	62-75-9	2.38E-04	5.43E-05
Pyrene	129-00-0	7.50E-07	1.71E-07
VOCs			
1,4-Dichlorobenzene	106-46-7	2.53E-07	5.77E-08
1,2,3-Trichloropropane	96-18-4	5.47E-07	1.25E-07

a. ICP 2004 and EDF-6252.
b. No indirect pathway exposure parameters in HHRAP; evaluated for inhalation impacts only.
c. Evaluated as both Cr(III) and Cr(VI).
d. No indirect pathway exposure parameters in HHRAP; evaluated using N-nitrosodi-n-propylamine as a surrogate.

2.6 Other Potentially Contributing Sources

The previous ILWMS risk assessment (ICP 2004) evaluated potential contributions from other contributing INL Site facility emissions for cumulative impacts and found that only those from the ICDF were significant. Human health risks from these ICDF emissions were originally calculated in the "INEEL CERCLA Disposal Facility Short-Term Risk Assessment" (EDF-ER-327). In accordance with the RAWP, this ICDF risk contribution was taken directly from ICP 2004, rather than recalculated in this risk assessment.

3. RISK ASSESSMENT GUIDELINES

3.1 EPA Protocol

Previous NWCF and ILWMS risk assessments (INEEL 1999a; INEEL 1999b; INEEL 2002; ICP 2004) used COPC-specific "risk coefficients" (risk or hazard per g/s released) developed for emissions from the INTEC main stack. These risk coefficients were developed from modeled unit (1 g/s) release air concentrations/deposition rates and fate and transport equations given in the draft release of EPA's *Human Health Risk Assessment Protocol for Hazardous Waste Combustion Facilities* (EPA 1998a) and earlier EPA guidance. For the current IWTU/ILWMS risk assessment, both IWTU emission estimates and new offgas data from the LET&D and PEWE sources were re-assessed using new modeling and the methods and parameter values in EPA's *Human Health Risk Assessment Protocol for Hazardous Waste Combustion Facilities* (HHRAP), which was recently released in final form (EPA 2005). Since ETS and ICDF emissions have not been revised, human health impact contributions from those sources were taken directly from the 2004 ILWMS risk assessment (ICP 2004), in accordance with the RAWP.

3.2 Target Risk Criteria

To evaluate potential carcinogenic risks, EPA generally uses a risk range of 10^{-4} to 10^{-6} and a hazard index target criteria of 1.0. However, for purposes of RCRA permitting decisions involving thermal technologies, the INL Site has traditionally used risk target levels from U.S. EPA Region 6 (EPA 1998b; INEEL 1999a; INEEL 2002; ICP 2004).

For the purposes of RCRA permitting decisions, the maximum acceptable risk is reduced from 10^{-4} to 10^{-5} primarily to account for exposure to background levels of contamination. As a result, the total individual risk associated with exposures to potential carcinogens released from a single facility should not exceed 1.0×10^{-5}. A calculated risk that exceeds these targets, however, would not necessarily indicate that the proposed action is not safe or that it presents an unacceptable risk. It may indicate that the initial assumptions and parameter values used in the modeling were overly conservative and need to be further refined.

For non-carcinogenic contaminants, U.S. EPA Region 6 recommends a modified target hazard quotient (HQ) or hazard index (HI) of 0.25 to account for background contributions. An HQ or HI equal to or exceeding 0.25 indicates only that there is a potential for non-carcinogenic effects, based on a specific set of exposure, model, and toxicity assumptions.

Ecological impacts were assessed using a screening level quotient (SLQ) and total screening level quotient (TSLQ) approach. This method divides modeled COPC soil concentrations by conservatively-calculated ecologically-based screening levels (EBSLs) to obtain a COPC-specific SLQ. The SLQs are then summed to obtain a TSLQ, similar to the human health hazard quotient/index. The EBSL methodology was first developed in Van Horn et al. (1995) and has been used at the INL Site for all CERCLA and RCRA risk assessments to date (e.g., INEEL 1999a; DOE-ID 1999). CERCLA assessments at the INL often use a TSLQ criterion of 10 for eco-risk because of the conservatisms inherent in EBSL modeling methods and assumptions. For this risk assessment, a more conservative TSLQ criterion of 1.0 was used. As with the other risk criteria used in this assessment, calculated risks that exceed this criterion do not necessarily indicate a risk but identifies a contaminant that should be investigated further using more refined (realistic) parameter values.

4. AIR MODELING METHODOLOGY

Air modeling was performed to evaluate the atmospheric dispersion, transport, and ground deposition of contaminants from the IWTU and ILWMS sources to downwind locations at which members of the public could potentially reside (off-INL Site) and to both on- and off-INL Site locations where ecological receptors may exist. In addition, maximum 24-hour air concentrations were evaluated along U.S. Highway 20/26 to assess potential motorist exposure, and maximum 1-hour air concentrations were evaluated at on-site locations to assess acute exposure for workers (or visiting public) at any facility on the INL. In accordance with the HHRAP (EPA 2005), the separate modeling runs were done for a 1 g/second release of a generic particulate contaminant and a generic vapor contaminant. Model output for maximum air concentrations ($\mu g/m^3$ per g/second released) and maximum ground depositions (g/m^2-year per g/second released) were then multiplied by contaminant-specific release rates (g/second) and vapor and particulate partitioning factors to obtain contaminant-specific results.

For evaluation of PEWE/LET&D emissions, which are released out the 250-ft high INTEC main stack, the ISCST3 model (EPA 1995, Version 02035) was used. This model has been approved by the EPA and the State of Idaho and is specified for use in EPA's HHRAP (EPA 2005). For evaluation of IWTU emissions, the Building Profile Input Program for PRIME (BPIPPRM Version 04274) and ISC-PRIME model (Version 04269) were used to assess potential building downwash of the IWTU stack (http://www.epa.gov/scram001/). Building downwash is not a concern for the INTEC main stack because it is greater than 2.5 times the height of adjacent buildings. The following sections detail model input parameter values, many of which are specified in the guidance.

4.1 Control Options Input

The following control pathway modeling options were selected:

- Regulatory default job control and dispersion options (EPA 1995):
  - Final plume rise, stack-tip downwash
  - Buoyancy-induced dispersion
  - Calms processing routine
  - No use of missing data processing routine
  - Default wind profile exponents
  - Default vertical potential temperature gradients
  - Upper bound values for super-squat buildings
  - No exponential decay for RURAL mode.
- RURAL dispersion coefficients (sigmas).
- Calculate concentration and dry, wet, and total deposition and depletion for particulate runs.
- Calculate concentration, wet deposition and depletion for vapor runs.
- Annual and 1-hour averaging times for on-site receptor runs. (Section 4.4)
- Annual averaging time for offsite receptor runs. (Section 4.4)
- 24-hour averaging times for U.S. Highway 20/26 receptor runs. (Section 4.4)

- Terrain heights evaluated (taken from the INL Geographical Information System [GIS] database). These elevations were developed from the U.S. Geological Survey National Elevation Data (NED).
- Dry deposition parameters for vapor phase modeling run: (1) replace "DEFAULT" control option with "TOXICS", (2) add control option GASDEPVD<Uservd>, where Uservd is the dry vapor deposition velocity (meters/second) - 0.5 cm/s. Since the TOXICS option is not available in the ISC-PRIME model, dry vapor deposition of IWTU emissions was calculated manually (in risk spreadsheets) by multiplying the air concentration by deposition velocity, in accordance with the draft HHRAP procedure. The results were benchmarked against the ISCST3-calculated dry deposition and found to be identical for a deposition velocity of 0.5 cm/s.

4.2 Source Input – IWTU Stack

IWTU offgas will be routed to a new stack on the southwest corner of the IWTU Process Building. ISC-PRIME source pathway input parameters for this stack are:

- Base elevation = 1498.3 m (4916 ft)
- Stack coordinates based on January 2007 design
- Height (HS) = 36.6 m (120 ft)
- Exit diameter (DS) = 1.5 m
- Effluent temperature (TS) = 335.4K (144°F)
- Effluent exit velocity (VS) = 17.8 m/s.

COPC source input parameter values include the following (EPA 2005):

- Particulate diameter (PARTDIAM): 0.35, 0.7, 1.1, 2.0, 3.6, 5.5, 8.1, 12.5, and 15.0 μm
- Mass fraction (MASSFRAX): 0.22, 0.08, 0.08 0.11, 0.10, 0.07, 0.10, 0.11, and 0.13
- Particulate density (PARTDENS): 1 g/cm^3
- Particle scavenging coefficients (PARTSLIQ [liquid] and PARTSICE [frozen]) for particle sizes listed above (liquid and ice assumed to be the same): 0.7, 0.5, 0.6, 1.3, 2.6, 3.9, 5.2, 6.7, and 6.7 ($\times 10^{-4}$ s^{-1}/mm-h^{-1})
- Vapor scavenging coefficients (GAS-SCAV): 1.7×10^{-4} (both liquid and ice)
- Wake effects from the IWTU building (building downwash) were evaluated using the Building Profile Input Program for PRIME (BPIPPRM version 04274) (http://www.epa.gov/scram001/).

4.3 Source Input – INTEC Main Stack

Existing ILWMS offgas emissions occur through the 250-ft INTEC main stack. ISCST3 source pathway input parameters for this stack are:

- Elevation = 1498.3 m (4916 ft)
- Height (HS) = 76.2 m (250 ft)
- Exit diameter (DS) = 1.98 m (6.5 ft)

- Effluent temperature (TS) = 302.6K (85°F)
- Effluent exit velocity (VS) = 18.83 m/s (at 123,000 ACFM).

Particle diameter, mass fraction, density, and scavenging coefficients are the same as those used for the IWTU stack. Building downwash was not evaluated for the INTEC main stack because its height (76.2 m) is greater than 2.5 times adjacent building heights resulting in a plume that is not affected by building wake effects (EPA 2005).

4.4 Receptor Grids

The following three receptor grids were evaluated for each particulate and vapor model run (Figure 3):

- BIG: A large 33 × 33-km coarse grid with 1-km spacing was used to determine regional dispersion and deposition trends for contour plotting, siting of refined receptor grids (see INL Site grids below) maximum on-site inhalation exposure (for field workers and other INL Site workers), and for determining maximum on-Site deposition for ecological risk assessment.

- INL Site: Two refined (100-m spacing, 1200 receptors each) grids in areas of maximum impact along the INL south site boundary and in the Big Southern Butte area were used to determine maximum annual-average air concentrations and deposition rates for long-term public exposures. Different refined grids were required for the INTEC main stack ILWMS releases and the IWTU stack releases.

- HWY: Discrete receptors placed at 100-m intervals along major impact areas of U.S. Highway 20/26, which traverses the southern portion of the INL Site. The area of maximum impact along the highway was determined from appropriate time-averaged coarse (BIG) grid modeling runs. The highway receptors were only evaluated for short-term direct inhalation impacts from non-carcinogens because the only potential receptors are transient motorists. A 24-hour averaging time was selected for modeling to be consistent with the State of Idaho Acceptable Ambient Concentrations (AACs) for non-carcinogenic toxic air pollutants.

The above receptor grids were used to determine the impacts for hypothetical "maximally-exposed" individual in each class of receptors (see Exposure Assessment section). Impacts at all other locations and real communities (e.g. Atomic City, Mud Lake) will be less due to increased plume dispersion and plume depletion with distance. Although ISCST3 may be used to assess receptors at distances of up to 50 km, model predictions become much more uncertain at distances beyond 20 km because the meteorological conditions (e.g., wind direction, speed) will likely change over the time it takes to transport pollutants to the receptor. In addition, it is known based on past modeling studies (INEEL 1999a; ICP 2004) that most of the deposition occurs within 10 km of the source. Based on these considerations, only the above receptor grids will be evaluated to determine if the target risk criteria are met.

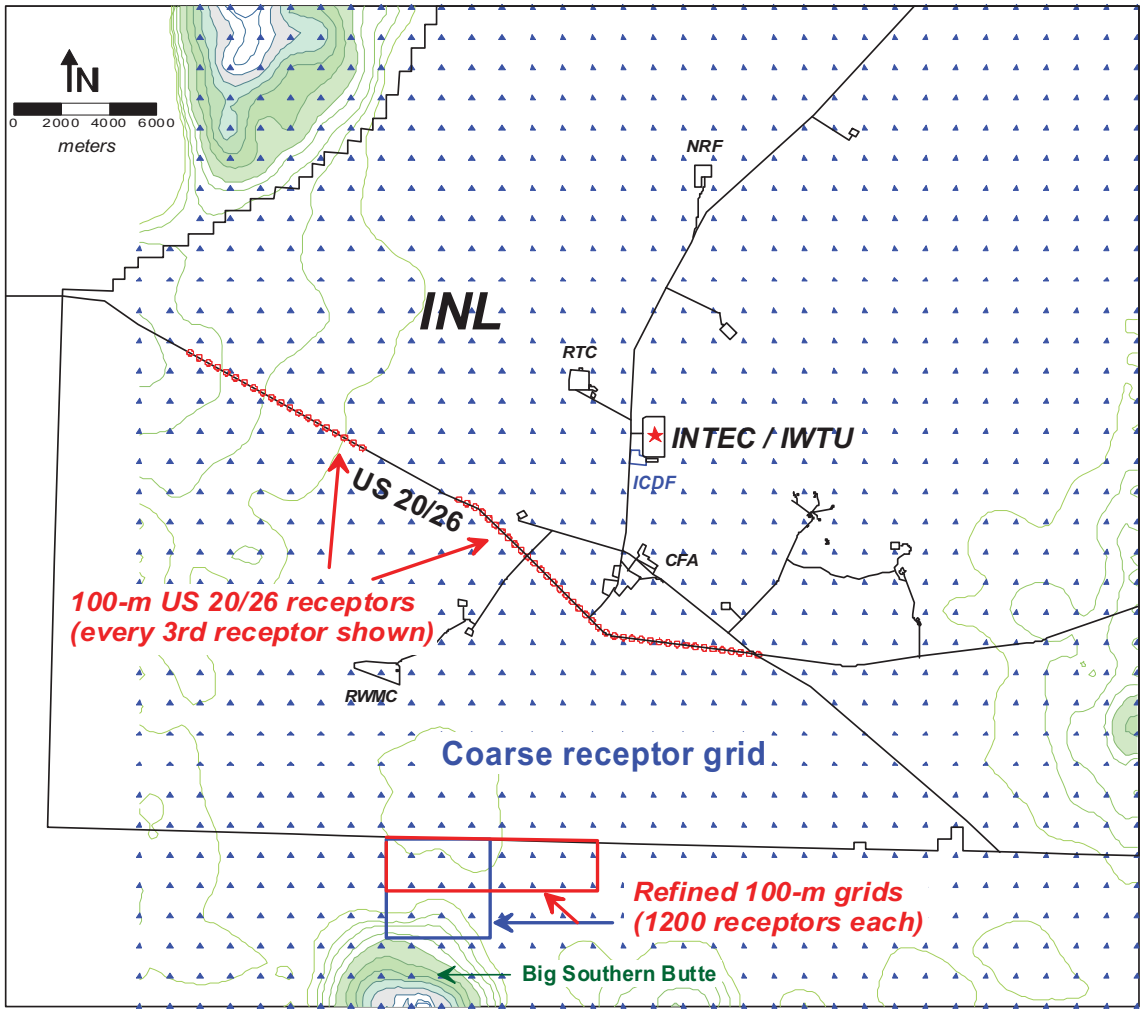

Figure 3. ISC3 receptor grids used in the modeling. Different refined grids (blue/red boxes) were required for the INTEC main stack ILWMS releases (blue box) and the IWTU stack releases (red box) because of the difference in stack parameters (250-ft vs. 120-ft heights).

4.5 Meteorological Information

Five years (1997 to 2001) of onsite meteorological data from the Grid 3 (GRD3) 200-ft (61-m) tower, located approximately 1.5 km north of the INTEC, were used for the modeling. The Grid 3 data were processed into sequential hourly ISC3 data input format by the National Oceanic and Atmospheric Administration (NOAA) Air Resources Laboratory in Idaho Falls, Idaho.

The NOAA determined stability classes using the lateral turbulence (σ_A) and wind speed method as outlined in the EPA report *Onsite Meteorological Program Guidance for Regulatory Modeling Applications* (EPA 1987). The small amount of missing data in the NOAA files was filled using hourly data (for the same month, day, and hour) from other INL Site towers (e.g., the Central Facilities Area) or, for single hour gaps, linear interpolation. Wind speeds less than the anemometer's starting threshold (0.26 m/second) were set to 0.0 for calms processing in ISC3. Wind speeds between the anemometer starting threshold and 1.0 m/second were set to 1.0 m/second to ensure that the model does not calculate

unrealistic concentration estimates (EPA 1995; EPA 1996). No long-term climatology of measured mixing heights exists for the INL Site, although NOAA has done numerous short-term measurements and estimated annual-average mixing heights of 800 m and short-term mixing heights of 100 m at the INL Site (memo from J. Saggendorf, NOAA, to Mike Abbott, February 11, 1991[a]). However, at the request of the DEQ, mixing heights were set to an extremely conservative value of 150 m for annual-average model runs and 50 m for hourly runs. These low mixing heights limit the vertical dispersion of the plume, producing very conservative model predictions, especially at the INL Site boundary distances from INTEC (~15 km).

Additional processing to determine ISC3-required deposition parameters was accomplished as follows:

1. Surface roughness height (z_0) was taken from the EPA 1998a for desert shrub land type, for spring, summer, fall, and winter (0.3, 0.3, 0.3, and 0.15 m, respectively).

2. The Monin-Obukhov length (L) was set, per EPA 1998a, at 2 m for "agricultural" (open) land use classification.

3. Friction velocity (u*) was calculated using an equation for atmospheric boundary layer similarity theory described by Ramsdell et al. 1994.

4. Daytime Bowen Ratios were set per EPA 1998a for "desert shrub land", average conditions, for the seasons of spring through winter, at 3.0, 4.0, 6.0, and 6.0, for the seasons: spring, summer, fall, and winter respectively.

4.6 Modeling Runs

Unit release (1 g/s) modeling runs were made for both the INTEC main stack and the IWTU stack to obtain the following modeling output (acronyms slightly modified from those in the HHRAP):

- Cv – Annual average vapor concentration (µg-second/g-m^3)
- Cp – Annual average particulate concentration (µg-second/g-m^3)
- Ddv – Annual average dry deposition of vapor (second/m^2-year) (ISCST3 runs only)
- Dwv – Annual average wet deposition of vapor (second/m^2-year)
- Ddp – Annual average dry deposition of particulate (second/m^2-year)
- Dwp – Annual average wet deposition of particulate (second/m^2-year).
- C1v – Maximum 1-hour vapor concentration (µg-second/g-m^3)
- C1p – Maximum 1-hour particulate concentration (µg-second/g-m^3)
- C24v – Maximum 24-hour vapor concentration (µg-second/g-m^3)
- C24p – Maximum 24-hour particulate concentration (µg-second/g-m^3).

Since there is no site-specific particle size information for the IWTU or ILWMS emissions, the additional "particle-bound" phase modeling run specified in the HHRAP was not made (i.e., there is no basis for apportioning pollutants on a different size basis).

---

a. Saggendorf, J., NOAA, to Mike Abbott, INEL, February 11, 1991, "Average INEL Mixing Depths."

Separate modeling runs were made for the INTEC main stack and IWTU stack for each of the three receptor grids (BIG, INL, and HWY) depending upon the exposure scenarios evaluated (see next section). Annual-average concentration and deposition runs (Cp, Cv, Ddv, Dwv, Ddp, Dwp) were made on the BIG and INL receptor grids. Maximum 24-hour concentration runs (C24v, C24p) were made on the HWY receptor grid. Maximum 1-hour concentrations runs (C1p, C1v) were made on the BIG and HWY grids.

5. EXPOSURE ASSESSMENT

5.1 Exposure Scenarios

The risk assessment evaluated seven general exposure scenarios:

- Farmer (annual-average direct inhalation and indirect ingestion)
- Farmer child (direct and indirect)
- Resident (direct and indirect)
- Resident child (direct and indirect)
- Highway motorist (maximum 24-hour average direct inhalation only)
- Maximum INL Site worker outside of INTEC (maximum 1-hour average direct inhalation only)
- Maximum ecological receptor (annual average soil concentrations at maximum [on-site] deposition location).

The first four scenarios were evaluated at the point of maximum impact at or beyond the INL Site boundary (refined INL Site receptor grids, Figure 3). The highway motorist was evaluated at the point of maximum impact along U.S. Highway 20/26 which traverses the southern part of the INL Site (Figure 3). The maximum INL Site worker was evaluated at the point of maximum air concentration outside the INTEC fence line using the "BIG" receptor grid (Figure 3). By evaluating the worker at the point of maximum impact on this grid, the assessment conservatively bounds impacts to any real INL Site worker outside the INTEC fence line, including those from adjacent facilities (e.g., ICDF) or field workers working outside facilities on the INL Site.

The HHRAP (EPA 2005) suggests three other potential exposure scenarios: (1) adult fisher, (2) child fisher, and (3) nursing infant. The fisher scenarios were not evaluated because there are no significant fisheries in the assessment area. The nursing infant scenario was not evaluated because it is specific to exposures to dioxins (PCDDs, PCDFs) and dioxin-like PCBs, and neither the IWTU nor existing ILWMS sources emit these types of compounds in any significant quantity.

The HHRAP suggests an acute receptor scenario to assess potential acute health affects from relatively high, short-term concentrations that might occur downwind from the facility. This risk assessment evaluated acute risk from both ILWMS and IWTU for an INL Site worker (maximum 1-hour concentration on the BIG receptor grid). The acute hazard quotient (AHQ) calculated would also apply to an INL Site visitor.

Maximum 24-hour concentrations of non-carcinogenic pollutants along U.S. Highway 20/26 were also evaluated against AACs for non-carcinogenic TAPs, given in the Idaho DEQ "Rules for the Control of Air Pollution in Idaho" (IDAPA 58.01.01.585 - 586). Carcinogenic TAPs are not evaluated at highway receptors because of the lack of long-term chronic exposure there (required for carcinogenic impacts). Also, since the risk calculations for the off-INL Site receptors (farmer, resident) include assessment of inhalation risk in accordance with the HHRAP methods, no additional IDAPA TAP assessment was made for carcinogenic TAPs at or beyond the INL Site boundary.

Complete descriptions of the exposure pathways and intake rates for the other four scenarios (farmer, farmer child, resident, resident child) are contained in the HHRAP (EPA 2005). While these four scenarios are not intended to be representative of all real exposure scenarios around the INL Site, they provide a standardized and conservative evaluation of maximum potential risks and are consistent with EPA guidance (EPA 2005). The conservative methods and assumptions inherent in these scenarios and the maximum impact locations at which they are evaluated ensure protectiveness of other special subpopulations (herdsmen, hunters) and regionally specific and diverse land-uses. They also will conservatively bound both current and future land use during the maximum foreseeable time period of IWTU and ILWMS operations (15 years).

5.2 Exposure Pathways, Media Concentrations, and Intakes

Table 3 lists the exposure pathways that were evaluated for each exposure scenario. These pathways, and the methods and parameter values used to calculate them, follow HHRAP guidance (EPA 2005). Media concentrations in soil, homegrown produce, animal feeds (including forage, silage, and grain), beef, milk, chicken, eggs, and pork, as well as the scenario and pathway-specific intake rates were assessed.

Four classes of parameters were used in the risk assessment equations in accordance with the HHRAP (EPA 2005): (1) chemical/physical, (2) plant biotransfer factors, (3) animal biotransfer factors, and (4) health benchmarks. All parameter values were taken from the most recent version of EPA's on-line HHRAP Companion data base (http://www.epa.gov/epaoswer/hazwaste/combust/risk.htm). The HHRAP equations and parameter values used are contained in Appendix B of this risk assessment.

Table 3. Exposure scenarios and pathways evaluated in the risk assessment.

	Exposure Scenarios Evaluated					
Exposure Pathway	Farmer	Farmer Child	Resident	Resident Child	US 20/26 Motorist	INL Site Worker
Inhalation of vapor and particulates	●	●	●	●	●	●
Incidental ingestion of soil	●	●	●	●	—	—
Ingestion of drinking water from surface water sources	a	a	a	a	a	a
Ingestion of homegrown produce	●	●	●	●	—	—
Ingestion of homegrown beef	●	●	—	—	—	—
Ingestion of milk from homegrown cows	●	●	—	—	—	—
Ingestion of homegrown chickens	●	●	—	—	—	—

Table 3. (continued).

Exposure Pathway	Exposure Scenarios Evaluated					
	Farmer	Farmer Child	Resident	Resident Child	US 20/26 Motorist	INL Site Worker
Ingestion of eggs from homegrown chickens	●	●	—	—	—	—
Ingestion of homegrown pork	●	●	—	—	—	—
Ingestion of fish	b	b	b	b	b	b
Ingestion of breast milk	c	c	c	c	c	c

● = Pathway assessed for that exposure scenario.
— = Pathway not assessed for that exposure scenario (EPA 2005).

a. No surface drinking water supplies exist in the assessment area.
b. No significant fisheries exist in the assessment area.
c. Not evaluated because there are no significant dioxin or dioxin-like PCBs emitted.

6. RISK AND HAZARD CHARACTERIZATION

Risks for each COPC were calculated using EPA cancer slope factors (CSF) for ingestion and unit risk factors (URF) for inhalation. Hazard quotients (HQs) are calculated using EPA Reference Doses (RfD) for ingestion and Reference Concentrations (RfC) for inhalation. In addition, maximum non-cancer inhalation impacts on U.S. 20/26 were compared against the appropriate IDAPA AACs. Acute short-term (maximum 1-hour air concentration) inhalation hazard (AHQs) were assessed using acute inhalation exposure criteria (AIEC). The EPA toxicity criteria (CSFs, URFs, RfDs, RfCs, and AIECs) were taken from EPA's HHRAP Companion Data Base (http://www.epa.gov/epaoswer/hazwaste/combust/risk.htm, January 2007), which is maintained with up-to-date health benchmark values by EPA. The risk/hazard equations and parameter values used are contained in Appendix B of this risk assessment.

For each exposure pathway (Table 3), a total cancer risk was calculated by summing individual COPC risks. The cumulative cancer risk was then calculated by summing the total cancer risk from each pathway. Cumulative cancer risks were calculated for each source (IWTU, LET&D, and PEWE) and then summed. Cumulative risk from operation of other contributing sources (ETS and ICDF) were assessed by adding the maximum risk estimates from their respective risk assessments (INEEL 2002; EDF-ER-327) to the maximum exposure scenario risk estimates calculated in this risk assessment for IWTU, LET&D, and PEWE.

7. ECOLOGICAL RISK ASSESSMENT

A screening level ecological risk assessment of the IWTU and ILWMS emissions was performed using the EBSLs approach. EBSLs are back-calculated COPC-specific soil concentrations that provide a conservatively safe exposure level for ecological receptors under chronic exposure conditions. EBSLs were first developed and documented in VanHorn et al. 1995 to assess oral exposure of ecological receptors via food, water, and soil ingestion at the INL Site. Inhalation of dust and vapors and dermal contact with soils by birds and mammals are not assessed since they are considered insignificant contributors to risk (EPA 1999). In 1999, EBSLs were further developed and used in the *Work Plan for Waste Area Groups 6 and 10 Operable Unit 10-04 Comprehensive Remedial Investigation/Feasibility Study* (DOE-ID 1999). This Work Plan documents the exposure equations, receptors (functional groups), input parameters, and toxicity reference values (TRVs) used to calculate EBSLs for receptors at the INL Site. Since then, EPA published improved guidance on ecological risk assessment for organic and

inorganic COPCs in the document *Screening Level Ecological Risk Assessment Protocol (SLERAP) for Hazardous Waste Combustion Facilities* (EPA 1999). The EBSLs used in the previous ILWMS risk assessment (ICP 2004), and those used in this risk assessment, were updated using this SLERAP approach.

Conservative COPC-specific SLQs were calculated by dividing the maximum 1-year COPC soil concentration (CstD, see Appendix B) by the EBSL (see Section 9 Results for specific values). A TSLQ was then calculated by summing the COPC SLQs, similar to the HQs and HIs in the human health risk assessment. For initial screening, a conservative TSLQ value of 1.0 was used. EBSLs allow rapid screening of COPCs to identify those that are the most important for risk. Since EBSLs are calculated using very conservative exposure assumptions, a COPC with an SLQ exceeding 1 does not necessarily indicate a risk but that the EBSL should be re-assessed using more realistic parameter values.

For initial screening, the ecological risk assessment evaluated IWTU and ILWMS emissions at the INL Site location of maximum modeled deposition (BIG grid). In accordance with the RAWP, cumulative ecological impacts from other contributing sources (ETS and ICDF) were evaluated by adding their previously calculated ecological TSLQs (ICP 2004) to the TSLQs for the IWTU/ILWMS sources calculated in this risk assessment.

8. UNCERTAINTY EVALUATION

The risk assessment qualitatively addresses the uncertainty in the methods and parameter values used and their potential effects on the final calculated risk/hazard. This includes uncertainties in source emissions estimates, air dispersion and deposition modeling, exposure assessment, toxicity values and ecological risk assessment.

9. RESULTS

9.1 Air Modeling

Maximum modeled air concentrations and deposition rates for all of the modeling runs are tabulated in Table 4. Public human health impacts (both cancer risks and HQs) from ingestion and inhalation were calculated using the maximum modeled off-site (INL grid) impacts which includes particle (Ddp, Dwp) and vapor (Dydv, Dywv) annual deposition rates and particle (Cp) and vapor (Cv) annual-average air concentrations. For the IWTU runs using ISC3P, Dydv was calculated as the product of the maximum off-site vapor air concentration (Cv) and vapor dry deposition velocity (Vdv) since ISC3P does not have a vapor dry deposition algorithm. This methodology was recommended in the 1998 peer-reviewed draft HHRAP and was found to produce equivalent results to the ISCST3-calculated Dydv. Short-term public inhalation impacts (HQs) were calculated using maximum 24-hour (C24p, C24v) on U.S. Highway 20/26 (Hwy grid). On-site modeled impacts (BIG grid) were used to assess dispersion spatial variability for siting refined receptor grids (INL and Hwy), maximum short-term inhalation impacts for on-site workers (C1v-on), and ecological receptors (Ddp-on, Dwp-on, Dydv-on, Dywv-on).

Table 4. Unit release (1 g/s) air modeling results for the INTEC main (PEWE/LET&D) and IWTU stacks.

Grid	Model Output	Description	Units	UTM-E (m)	UTM-N (m)	Value
		INTEC main stack runs (ISCST3)				
BIG	Cp-on	On-site particle annual conc.	μg-s/g-m^3	344923	4824950	0.086
	Ddp-on	On-site particle annual dry dep.	s/m^2-yr	344923	4826950	0.068
	Dwp-on	On-site particle annual wet dep.	s/m^2-yr	344923	4826950	0.0076
	C1p-on	On-site particle 1-hr conc.	μg-s/g-m^3	334923	4828950	5.60
	Cv-on	On-site vapor annual conc.	μg-s/g-m^3	344923	4826950	0.092
	Dydv-on	On-site vapor annual dry dep.	s/m^2-yr	344923	4826950	0.014
	Dywv-on	On-site vapor annual wet dep.	s/m^2-yr	344923	4826950	0.0047
	C1v-on	On-site vapor 1-hr conc.	μg-s/g-m^3	343923	4828950	3.30
	C24v-on	On-site vapor 24-hr conc.	μg-s/g-m^3	Used for refined grid siting		
Hwy	C24p	US 20/26 particle 24-hr conc.	μg-s/g-m^3	341893	4819687	0.25
	C24v	US 20/26 vapor 24-hr conc.	μg-s/g-m^3	331300	4827066	0.29
INL	Cp	Off-site particle annual conc.	μg-s/g-m^3	337000	4810400	0.031
	Ddp	Off-site particle annual dry dep.	s/m^2-yr	337000	4810400	0.0049
	Dwp	Off-site particle annual wet dep.	s/m^2-yr	337000	4810400	0.00029
	Cv	Off-site vapor annual conc.	μg-s/g-m^3	337000	4810400	0.028
	Dydv	Off-site vapor annual dry dep.	s/m^2-yr	337000	4810400	0.0044
	Dywv	Off-site vapor annual wet dep.	s/m^2-yr	337000	4810400	0.00034
		IWTU runs (ICS3P with BPIPPRM)				
BIG	Cp-on	On-site particle annual conc.	μg-s/g-m^3	344923	4826950	0.32
	Ddp-on	On-site particle annual dry dep.	s/m^2-yr	344923	4826950	0.19
	Dwp-on	On-site particle annual wet dep.	s/m^2-yr	344923	4826950	0.0087
	C1p-on	On-site particle 1-hr conc.	μg-s/g-m^3	349923	4826950	13.0
	Cv-on	On-site vapor annual conc.	μg-s/g-m^3	344923	4826950	0.35
	Dydv-on	On-site vapor annual dry dep.	s/m^2-yr	Not available in ISC3-PRIME		
	Dywv-on	On-site vapor annual wet dep.	s/m^2-yr	344923	4826950	0.0056
	C1v-on	On-site vapor 1-hr conc.	μg-s/g-m^3	344923	4826950	14.4
	C24v-on	On-site vapor 24-hr conc.	μg-s/g-m^3	Used for refined grid siting		
Hwy	C24p	US 20/26 particle 24-hr conc.	μg-s/g-m^3	341538	4820039	0.89
	C24v	US 20/26 vapor 24-hr conc.	μg-s/g-m^3	340478	4821101	1.13
INL	Cp	Off-site particle annual conc.	μg-s/g-m^3	336800	4812500	0.052
	Ddp	Off-site particle annual dry dep.	s/m^2-yr	336500	4812500	0.0064
	Dwp	Off-site particle annual wet dep.	s/m^2-yr	338500	4812500	0.00040
	Cv	Off-site vapor annual conc.	μg-s/g-m^3	336500	4812500	0.062
	Dydv	Off-site vapor annual dry dep.	s/m^2-yr	Not available in ISC3-PRIME		
	Dywv	Off-site vapor annual wet dep.	s/m^2-yr	338500	4812500	0.00050

Plots of the dispersion trends for both ILWMS (INTEC main stack) and IWTU are shown in Figures 4–9. The plots were made using the PLOTFILE output from ISCST3/ISC3P and Surfer® 8 mapping software.[b,c] These figures show that the locations of the maximum off-site impact (Figures 4 and 5) are different for the INTEC main stack and the IWTU stack, with the INTEC main stack maximum occurring further out on the elevated northern slope of Big Southern Butte and the IWTU maximum occurring at the INL Site boundary. This is likely due to the fact that the 250-ft INTEC main stack is more than twice as high as the 120-ft IWTU stack, resulting in a higher INTEC main stack plume centerline which does not reach maximum at ground-level until it impacts the elevated slopes of Big Southern Butte. This difference in stack heights also influences the maximum ground-level relative (1 g/s) air concentrations off-site, with the IWTU maximum approximately twice as high as the INTEC main stack maximum. It also changes the relative dispersion patterns for the 1-hour and 24-hour model results. In both the annual-average and 24-hour modeling runs, maximum impacts were adequately resolved using refined 100-m receptor grids that extended well beyond the point of maximum impact determined in the coarse (INL) receptor grid. Maximum 1-hour concentrations on-site were deemed to be adequately assessed using the coarse (INL) receptor grid based on the very low AHQ calculated using these results.

b. Golden Software, Inc., Golden, CO (www.goldensoftware.com).

c. References herein to any specific commercial product, process, or service by trade name, trademark, manufacturer, or otherwise, does not necessarily constitute or imply its endorsement, recommendation, or favoring by the U.S. Government, any agency thereof, or any company affiliated with the Idaho Cleanup Project.

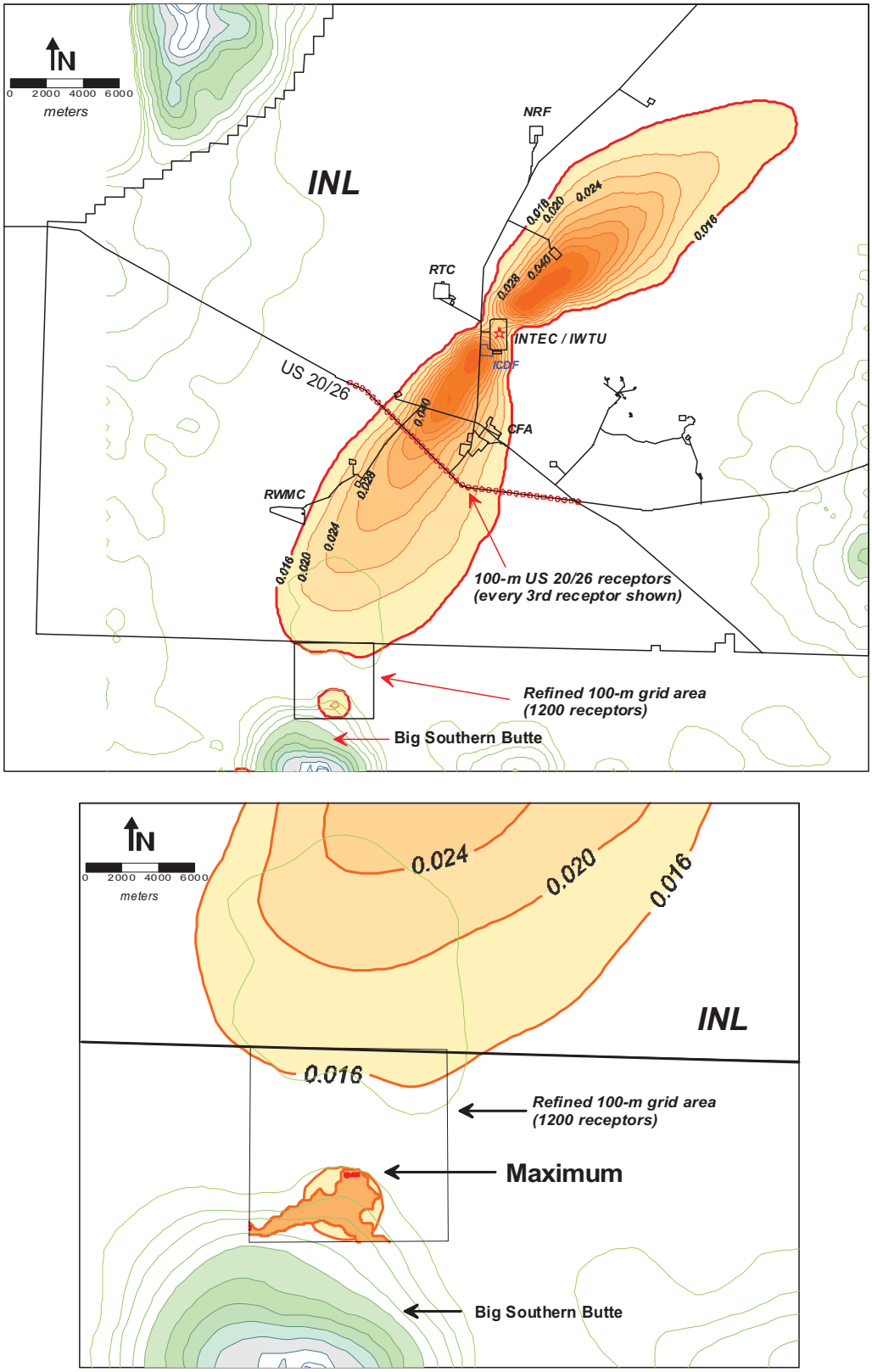

Figure 4. Annual-average vapor dispersion pattern (μg/m^3 per g/s, orange contour lines) for the INTEC main stack with maximum off-INL impact location noted.

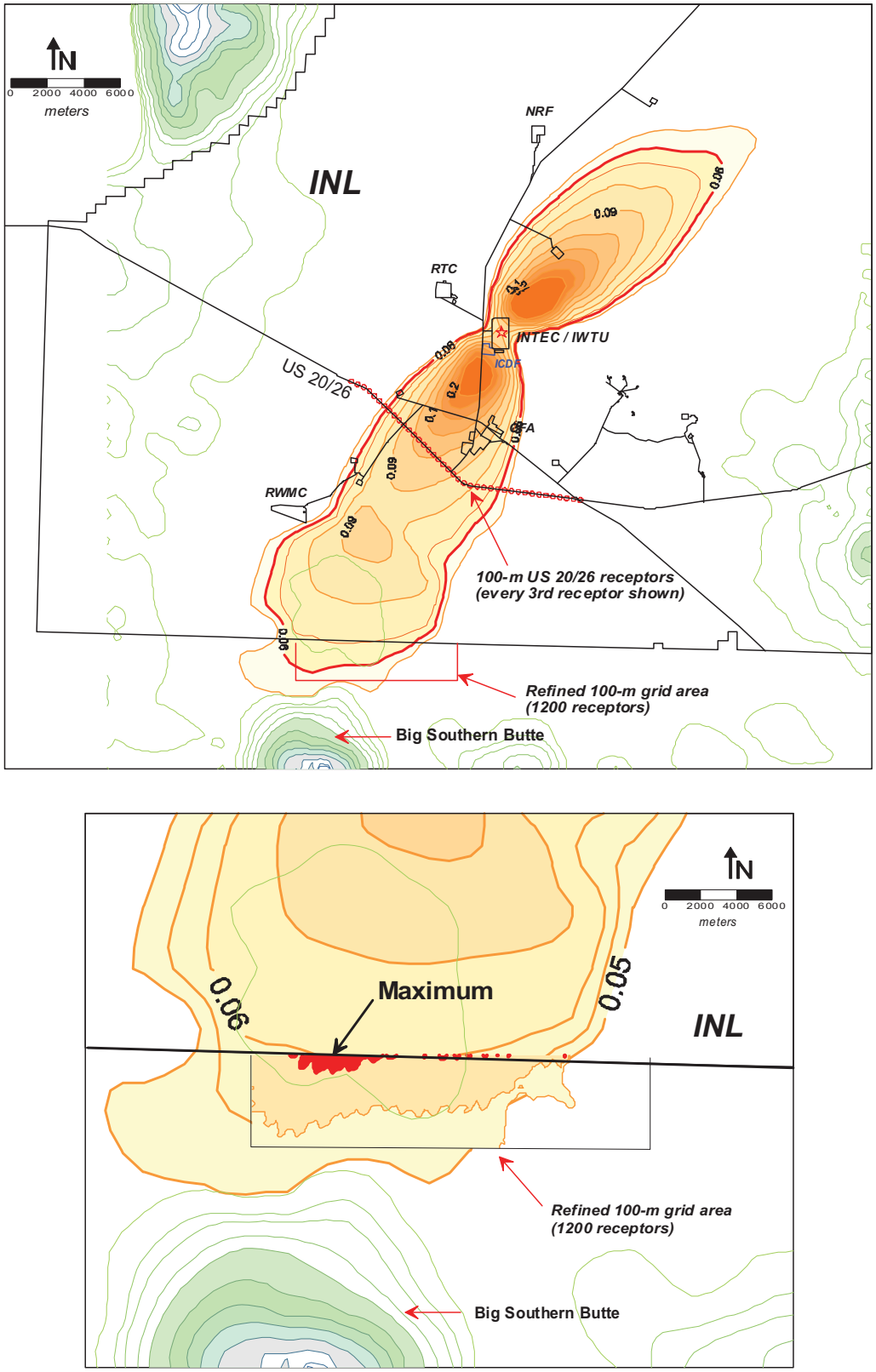

Figure 5. Annual-average vapor dispersion pattern (μg/m^3 per g/s, orange contour lines) for the IWTU stack with maximum off-INL impact location noted.

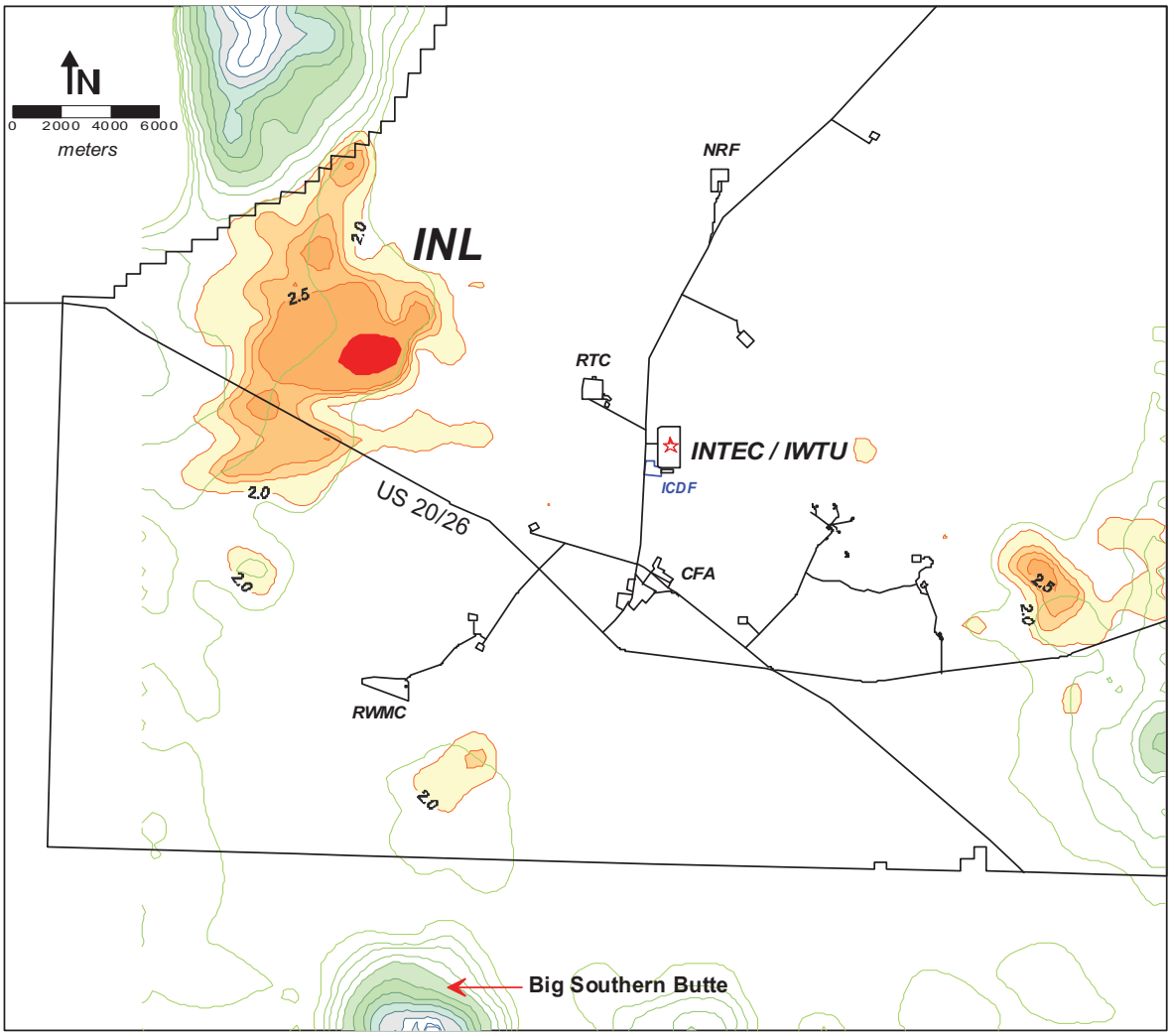

Figure 6. Maximum 1-hour vapor dispersion pattern for the INTEC main stack (μg/m^3 per g/s, orange contour lines). Used to evaluate maximum short-term acute inhalation impacts.

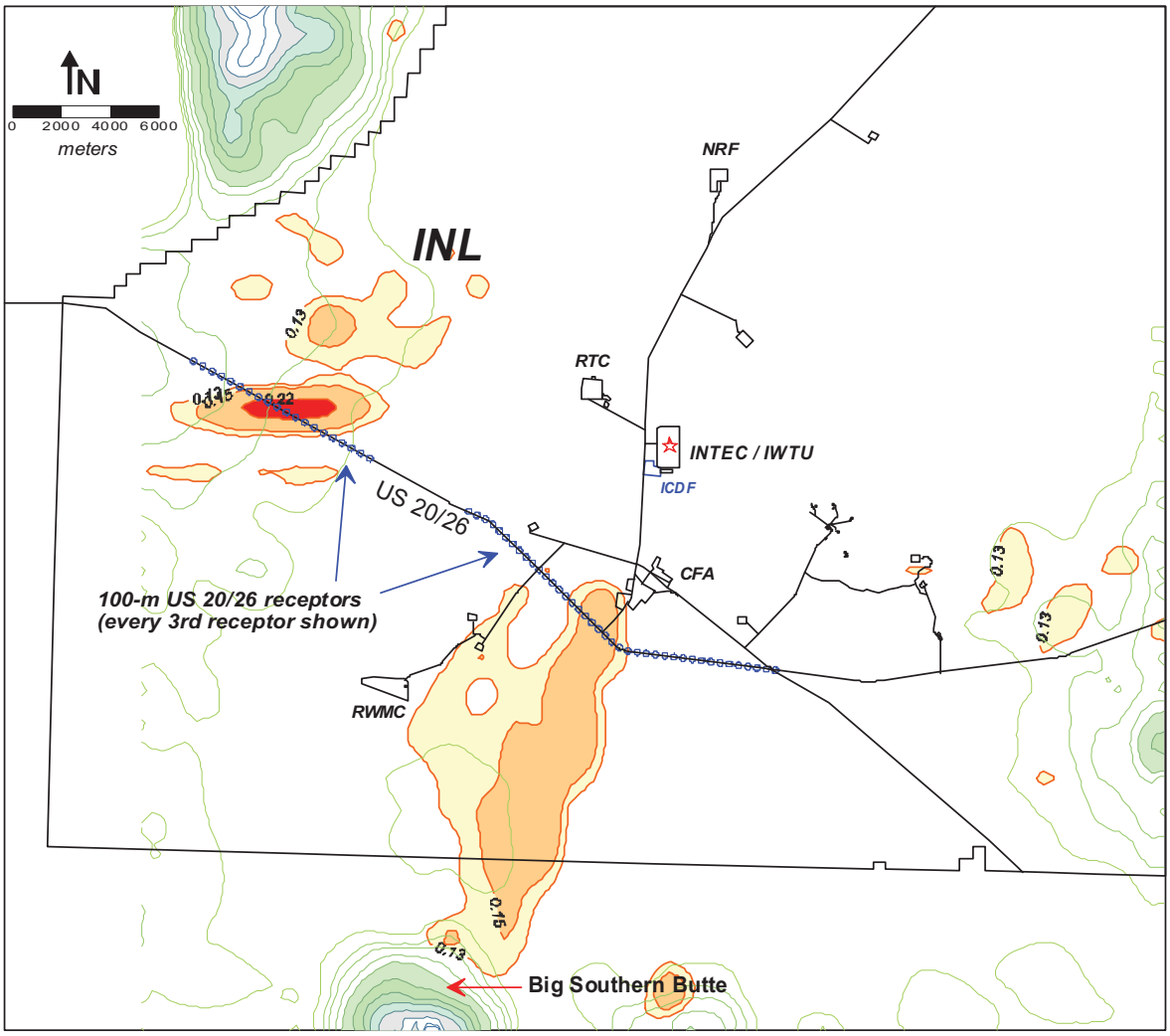

Figure 7. Maximum 24-hour vapor dispersion pattern for the INTEC main stack (μg/m^3 per g/s, orange contour lines). Used to site discrete 100-m interval receptors on U.S. Highway 20/26.

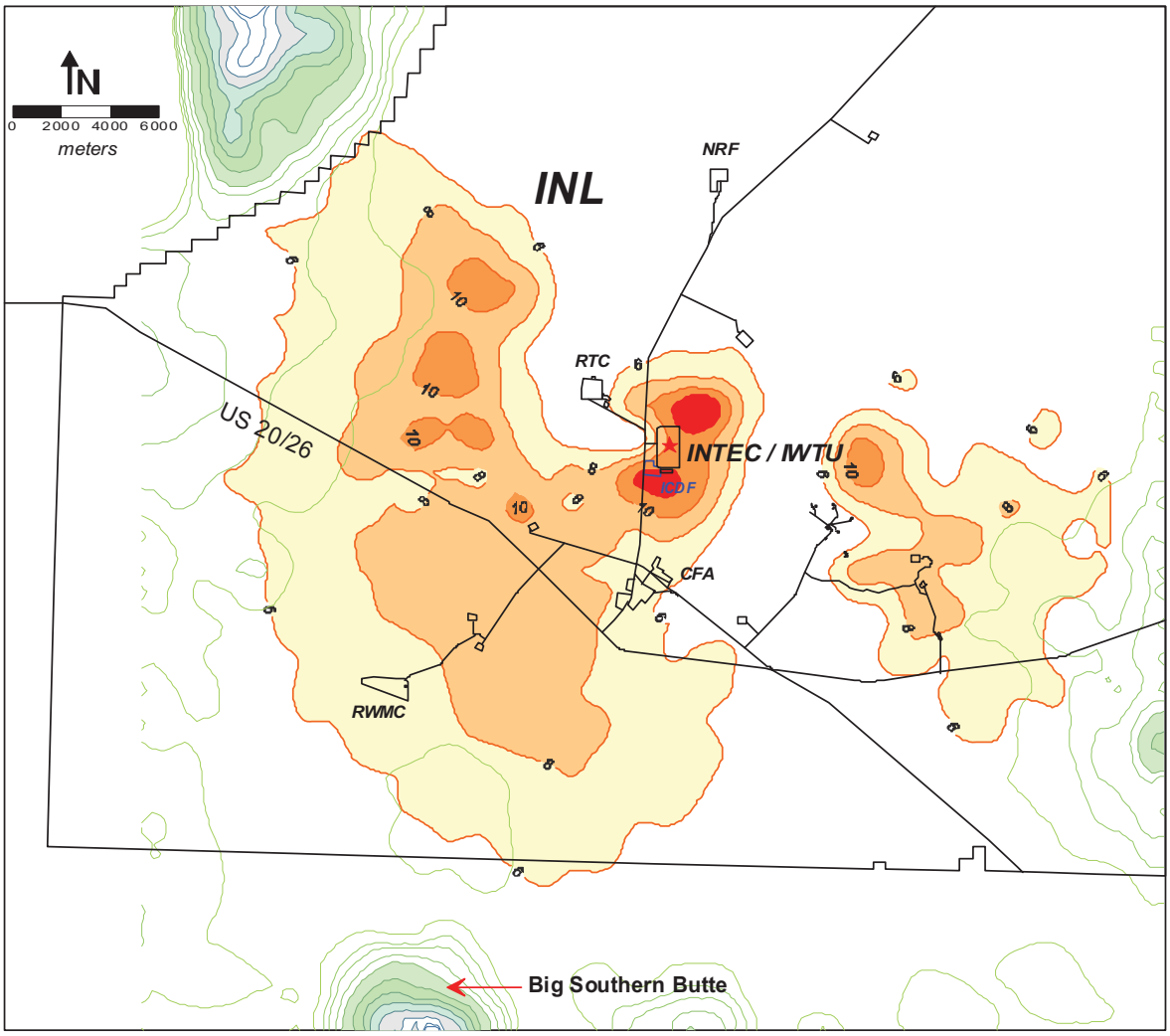

Figure 8. Maximum 1-hour vapor dispersion pattern from the IWTU stack (μg/m^3 per g/s, orange contour lines). Used to evaluate maximum short-term acute inhalation impacts.

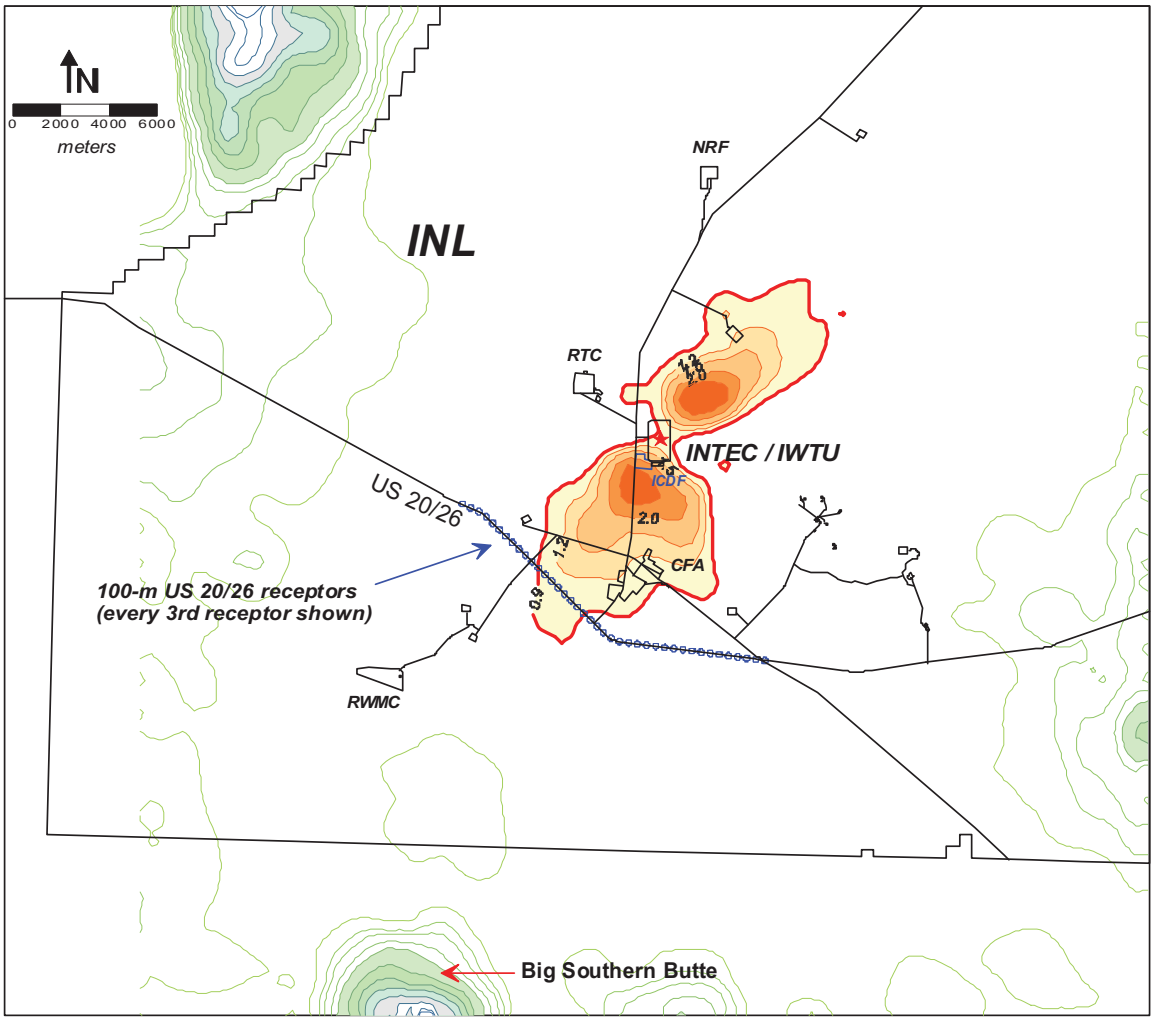

Figure 9. Maximum 24-hour vapor dispersion pattern from the IWTU stack (μg/m^3 per g/s, orange contour lines). Used to site discrete 100-m interval receptors on U.S. Highway 20/26.

9.2 Human Health Impacts

9.2.1 Off-INL Public Health Impacts – ILWMS and IWTU

This section gives the estimated human health impacts (cancer risks and hazard quotients) for the LET&D/PEWE and IWTU. These results were calculated using the HHRAP methods, equations, and parameter values listed in Section 5.2 and Appendix B. A summary of the combined estimated cancer risks and non-cancer hazards for both the LET&D/PEWE and IWTU is given in Table 5. Tables 6 through 11 provide detailed human health impact results for individual COPCs by source (IWTU, LET&D/PEWE), exposure pathway (ingestion, inhalation), and type of health impact (cancer risk, non-cancer hazard). The maximum cancer risk estimate for any of the scenarios is 4.8E-08 (farmer), which is about 0.5% of the EPA target criteria (1E-05). The maximum non-cancer hazard index estimate is 0.0089, less than 4% of the EPA target criteria (0.25). Because these scenarios were evaluated at the location of maximum off-site air concentrations and deposition rates (where no one resides), real impacts would be less for actual residents that live around the site (e.g., Atomic City). These results demonstrate that both

of these facilities can be simultaneously operated without unacceptable health impacts to the public at any off-site location.

Table 5. Summary of total estimated human health impacts from LET&D/PEWE and IWTU emissions.

Health Impact	Child	Farmer Child	Adult	Farmer
Ingestion Cancer Risk	2.2E-09	6.7E-09	8.7E-09	1.2E-08
Inhalation Cancer Risk	5.4E-09	5.4E-09	2.7E-08	3.6E-08
Total Cancer Risk	**7.6E-09**	**1.2E-08**	**3.6E-08**	**4.8E-08**
Ingestion Non-cancer Hazard	1.2E-04	1.3E-04	6.7E-05	2.7E-05
Inhalation Non-cancer Hazard	8.8E-03	8.8E-03	8.8E-03	8.8E-03
Total Non-cancer Hazard (HI)	**0.0089**	**0.0089**	**0.0088**	**0.0088**

Indirect (i.e., ingestion) cancer risks and hazard quotients for the four public exposure scenarios evaluated (child, farmer child, adult, farmer) are given in Tables 6 and 7 for the IWTU emissions and Tables 8 and 9 for the LET&D/PEWE emissions. For IWTU emissions, cancer risk (1.1E-09 maximum for the farmer scenario) is primarily due to arsenic, while hazard index (HI) (9.2E-05 maximum for the farmer child) is primarily due to mercury (mercuric chloride) and silver. For LET&D/PEWE emissions, cancer risk (1.1E-08 maximum for the farmer) is primarily due to N-nitrosodipropylene, while the HI (3.8E-05 maximum for the farmer child) is primarily due to hydrogen chloride, chromium (VI), and mercury (mercuric chloride). It should be noted that the actual valence state of the chromium emissions are unknown and that our assumption of the more hazardous chromium (VI) form is an upper-bound estimate for this metal. The sum of the maximum IWTU and ILWMS indirect impacts are 1.2E-08 cancer risk and 1.3E-04 HI.

Table 6. Ingestion cancer risk estimates for IWTU emissions.

	Ingestion Cancer Risk - IWTU Operations			
COPC	Child	Farmer Child	Adult	Farmer
Aluminum	NA	NA	NA	NA
Arsenic	1.17E-10	2.12E-10	9.33E-10	1.10E-09
Barium	NA	NA	NA	NA
Beryllium	NA	NA	NA	NA
Cadmium	4.85E-18	1.65E-17	5.98E-17	7.77E-17
Chlorine	NA	NA	NA	NA
Chromium	NA	NA	NA	NA
Hexavalent chromium	NA	NA	NA	NA
Hydrogen chloride	NA	NA	NA	NA
Lead	1.10E-22	1.50E-22	4.28E-22	3.13E-22
Mercuric chloride	NA	NA	NA	NA
Mercury - total	NA	NA	NA	NA
Methyl mercury	NA	NA	NA	NA
Nickel	NA	NA	NA	NA
Selenium	NA	NA	NA	NA
Silver	NA	NA	NA	NA
Zinc	NA	NA	NA	NA
Total Risk	**1.2E-10**	**2.1E-10**	**9.3E-10**	**1.1E-09**

Note: NA = not applicable (no toxicity or HHRAP transport parameter values for COPC)

Table 7. Non-cancer ingestion hazard quotients for IWTU emissions.

COPC	Ingestion Hazard Quotient – IWTU Operations			
	Child	Farmer Child	Adult	Farmer
Aluminum	NA	NA	NA	NA
Arsenic	3.05E-06	5.49E-06	4.84E-06	4.27E-06
Barium	2.45E-06	3.78E-06	1.77E-06	9.65E-07
Beryllium	1.20E-07	3.54E-07	3.13E-07	3.12E-07
Cadmium	1.49E-13	5.06E-13	3.67E-13	3.58E-13
Chlorine	5.55E-07	2.05E-06	7.48E-07	5.53E-07
Chromium	9.20E-19	9.81E-19	5.17E-19	1.96E-19
Hexavalent chromium	4.63E-16	4.94E-16	2.61E-16	9.86E-17
Hydrogen chloride	2.57E-08	2.57E-08	1.71E-09	1.06E-09
Lead	3.53E-16	4.80E-16	2.74E-16	1.50E-16
Mercuric chloride	2.71E-05	3.20E-05	2.15E-05	9.52E-06
Mercury - total	NA	NA	NA	NA
Methyl mercury	7.64E-07	1.37E-06	9.15E-07	9.32E-07
Nickel	1.17E-17	1.28E-17	8.17E-18	3.99E-18
Selenium	2.97E-06	3.02E-06	1.47E-06	3.00E-07
Silver	4.30E-05	4.38E-05	1.85E-05	2.37E-06
Zinc	3.63E-20	9.14E-20	6.21E-20	5.52E-20
Total Hazard Index (HI)	**8.0E-05**	**9.2E-05**	**5.0E-05**	**1.9E-05**

Note: NA = not applicable (no toxicity or HHRAP transport parameter values for COPC)

Table 8. Ingestion cancer risk estimates for LET&D/PEWE emissions.

COPC	Ingestion Cancer Risk – LET&D/PEWE			
	Child	Farmer Child	Adult	Farmer
Arsenic	9.30E-13	1.68E-12	7.39E-12	8.69E-12
Benzo(a)pyrene	3.66E-10	3.73E-10	1.01E-09	5.01E-10
Chromium	NA	NA	NA	NA
Hexavalent chromium	NA	NA	NA	NA
1,4-dichlorobenzene	1.71E-18	5.93E-18	3.12E-18	9.36E-18
3,3'-dichlorobenzidine	1.01E-10	1.38E-10	3.54E-10	2.80E-10
Bis(2-ethylhexyl phthalate)	1.15E-13	2.22E-13	7.22E-13	7.63E-13
Fluoranthene	NA	NA	NA	NA
Hexachlorocyclopentadiene	NA	NA	NA	NA
Hydrogen chloride	NA	NA	NA	NA
Mercuric chloride	NA	NA	NA	NA
Mercury - total	NA	NA	NA	NA
Methyl mercury	NA	NA	NA	NA
Nickel	NA	NA	NA	NA
N-nitrosodipropylamine	1.65E-09	6.01E-09	6.41E-09	1.00E-08
Pyrene	NA	NA	NA	NA
1,2,3-trichloropropane	2.28E-15	8.04E-15	5.86E-15	1.29E-14
Total Risk	**2.1E-09**	**6.5E-09**	**7.8E-09**	**1.1E-08**

Note: NA = not applicable (no toxicity or HHRAP transport parameter values for COPC)

Table 9. Non-cancer ingestion hazard quotients for LET&D/PEWE emissions.

COPC	Ingestion Hazard Quotient – LET&D/PEWE			
	Child	Farmer Child	Adult	Farmer
Arsenic	2.41E-08	4.34E-08	3.83E-08	3.38E-08
Benzo(a)pyrene	NA	NA	NA	NA
Chromium	2.09E-08	2.22E-08	1.17E-08	4.43E-09
Hexavalent chromium	1.05E-05	1.12E-05	5.91E-06	2.24E-06
1,4-dichlorobenzene	1.23E-13	4.27E-13	4.49E-14	1.01E-13
3,3'-dichlorobenzidine	NA	NA	NA	NA
Bis(2-ethylhexyl phthalate)	4.80E-09	9.25E-09	6.02E-09	4.77E-09
Fluoranthene	1.25E-09	1.35E-09	4.47E-10	1.41E-10
Hexachlorocyclopentadiene	7.25E-10	8.19E-10	2.22E-10	7.77E-11
Hydrogen chloride	1.15E-05	1.15E-05	7.62E-07	4.71E-07
Mercuric chloride	7.73E-06	9.07E-06	6.04E-06	2.64E-06
Mercury - total	6.13E-08	2.45E-07	1.75E-07	1.75E-07
Methyl mercury	2.55E-07	4.35E-07	2.85E-07	2.74E-07
Nickel	5.23E-06	5.72E-06	3.65E-06	1.78E-06
N-nitrosodipropylamine	NA	NA	NA	NA
Pyrene	3.98E-09	4.36E-09	2.08E-09	6.92E-10
1,2,3-trichloropropane	6.33E-13	2.23E-12	3.26E-13	5.36E-13
Total Hazard Index (HI)	**3.5E-05**	**3.8E-05**	**1.7E-05**	**7.6E-06**

Note: NA = not applicable (no toxicity or HHRAP transport parameter values for COPC)

Maximum inhalation impacts for the child scenarios, adult, and farmer exposure scenarios are given in Tables 10 and 11. For IWTU, cancer risk (6.7E-09 maximum for the farmer) is driven by arsenic and beryllium, and non-cancer hazards (0.0056 maximum for all scenarios) are driven by nitrogen oxides, chorine, barium, and arsenic. For LET&D/PEWE emissions, cancer risks (2.9E-08 maximum for the farmer) are driven by hexavalent chromium, and non-cancer hazards (0.003 maximum for all scenarios) are driven by hydrogen chloride. The sums of the maximum IWTU and LET&D/PEWE inhalation impacts are 3.6E-08 cancer risk (farmer) and 0.0088 HI non-cancer risk (for all) (see Table 5).

Table 10. Maximum inhalation health impact estimates for IWTU emissions.

COPC	Inhalation Cancer Risk			Inhalation HQ
	Child	Adult	Farmer	
Aluminum	NA	NA	NA	1.92E-09
Arsenic	7.35E-10	3.67E-09	4.90E-09	1.98E-04
Barium	NA	NA	NA	2.46E-04
Beryllium	2.63E-10	1.31E-09	1.75E-09	9.56E-05
Bromine	NA	NA	NA	2.67E-07
Cadmium	1.51E-16	7.53E-16	1.00E-15	3.98E-10
Calcium oxide	NA	NA	NA	3.54E-11
Carbon monoxide	NA	NA	NA	2.42E-07
Chlorine	NA	NA	NA	2.29E-03
Chromium	NA	NA	NA	1.84E-12
Fluorides	NA	NA	NA	8.18E-06

Table 10. (continued).

COPC	Inhalation Cancer Risk			Inhalation HQ
	Child	Adult	Farmer	
Fluorine	NA	NA	NA	7.97E-06
Hexavalent chromium	2.08E-19	1.04E-18	1.39E-18	5.75E-09
Hydrogen chloride	NA	NA	NA	2.35E-05
Lead	1.54E-22	7.69E-22	1.03E-21	9.97E-17
Mercuric chloride	NA	NA	NA	1.02E-06
Mercury - total	NA	NA	NA	1.60E-08
Methyl mercury	NA	NA	NA	NA
Molybdenum	NA	NA	NA	6.07E-07
Nickel	1.01E-21	5.06E-21	6.75E-21	6.43E-11
Nitrogen oxides	NA	NA	NA	2.70E-03
Particulate matter	NA	NA	NA	3.23E-14
Rhodium	NA	NA	NA	1.17E-07
Selenium	NA	NA	NA	9.94E-08
Silver	NA	NA	NA	9.80E-07
Sulfur dioxide	NA	NA	NA	2.43E-05
Tin	NA	NA	NA	6.59E-07
Zinc	NA	NA	NA	1.41E-11
Total	**1.0E-09**	**5.0E-09**	**6.7E-09**	**0.0056**

Note: NA = not applicable (no toxicity or HHRAP transport parameter values for COPC)

Table 11. Maximum inhalation health impact estimates for LET&D/PEWE emissions.

COPC	Inhalation Cancer Risk			Inhalation HQ
	Child	Adult	Farmer	
Arsenic	4.55E-12	2.28E-11	3.04E-11	4.12E-07
Benzo(a)pyrene	1.51E-12	7.56E-12	1.01E-11	NA
Chromium	NA	NA	NA	1.44E-07
Hexavalent chromium	3.70E-09	1.85E-08	2.47E-08	4.50E-04
1,4-dichlorobenzene	1.45E-15	7.24E-15	9.65E-15	1.92E-12
3,3'-dichlorobenzidine	1.18E-12	5.92E-12	7.90E-12	NA
Bis(2-ethylhexyl phthalate)	NA	NA	NA	NA
Fluoranthene	NA	NA	NA	3.77E-11
Hexachlorocyclopentadiene	NA	NA	NA	2.25E-07
Hydrogen chloride	NA	NA	NA	2.62E-03
Mercuric chloride	NA	NA	NA	1.84E-07
Mercury – total	NA	NA	NA	2.77E-09
Methyl mercury	NA	NA	NA	NA
Nickel	4.24E-10	2.12E-09	2.83E-09	1.03E-04
N-nitrosodipropylamine	2.49E-10	1.24E-09	1.66E-09	NA
Pyrene	NA	NA	NA	4.14E-11
1,2,3-trichloropropane	5.70E-13	2.85E-12	3.80E-12	NA
Total	**4.4E-09**	**2.2E-08**	**2.9E-08**	**0.003**

Note: NA = not applicable (no toxicity or HHRAP transport parameter values for COPC)

9.2.2 Contributions from Other Sources

Human health impacts from the other potentially contributing sources, ETS and ICDF, were previously calculated and documented in INEEL 2002, EDF-ER-327, and ICP 2004. The maximum cancer risks for ETS and ICDF were 1.3E-10 and 4.2E-08, respectively. The ETS contribution is insignificant, but the ICDF cancer risk estimate effectively doubles the maximum LET&D/PEWE/IWTU risk (4.8E-08, Table 5) to 9E-08, about 1% of the EPA target criteria target criteria (1E-05). The maximum HIs for ETS and ICDF were 6.5E-06 and <0.01, respectively. The ICDF HI estimate was calculated in EDF-ER-327 for an INL Site visitor, which conservatively bounds any off-site public receptor. The cumulative HI for all facilities (IWTU, LET&D, PEWE, ETS, and ICDF) is therefore less than 0.02, about 7% of the EPA target criteria (0.25).

9.2.3 Impacts to Public Motorists

Potential acute (non-cancer) inhalation impacts to passing motorists on U.S. Highway 20/26, which traverses the southern portion of the INL Site, were evaluated by dividing the modeled maximum 24-hour air concentrations on the highway by AACs for non-carcinogens published by the Idaho DEQ for toxic air pollutants (IDAPA 58.01.01.585). Tables 12 and 13 summarize the modeling results for this assessment. In all cases, maximum 24-hour air concentrations were well below the published AACs. The maximum impact was from IWTU fluorine emissions, which was less than 0.02% of the AAC. Inhalation cancer risk is not evaluated on Highway 20/26 because the transient nature of exposure to passing motorists does not meet the chronic exposure assumption needed to assess cancer risk.

Table 12. Comparison of maximum IWTU 24-hour air concentrations with Idaho Acceptable Ambient Concentrations for non-carcinogens on U.S. Highway 20/26.

COPC	24-hr Conc US 20/26 ($\mu g/m^3$)	AAC ($\mu g/m^3$)	Conc/AAC
Aluminum	1.71E-07	1.00E+02	1.71E-09
Arsenic	1.06E-04	NA	NA
Barium	2.19E-03	2.50E+01	8.75E-05
Beryllium	3.40E-05	NA	NA
Bromine	8.69E-06	3.50E+01	2.48E-07
Cadmium	1.41E-09	NA	NA
Calcium oxide	6.78E-08	1.00E+02	6.78E-10
Carbon monoxide	4.63E-02	NA	NA
Chlorine	8.75E-03	1.50E+02	5.83E-05
Chromium	8.17E-10	2.50E+01	3.27E-11
Fluorides	2.03E-03	1.25E+02	1.63E-05
Fluorine	1.53E-02	1.00E+02	1.53E-04
Hexavalent chromium	8.17E-10	NA	NA
Hydrogen chloride	9.01E-03	3.75E+02	2.40E-05
Lead	2.66E-15	NA	NA
Mercuric chloride	2.14E-05	2.50E+00	8.55E-06
Mercury – total	9.20E-07	2.50E+00	3.68E-07
Methyl mercury	NA	NA	NA
Molybdenum	5.38E-03	5.00E+02	1.08E-05
Nickel	2.29E-10	NA	NA
Nitrogen oxides	1.03E+00	NA	NA

Table 12. (continued).

COPC	24-hr Conc US 20/26 (μg/m^3)	AAC (μg/m^3)	Conc/AAC
Particulate matter	8.60E-11	NA	NA
Rhodium	1.04E-04	5.00E+01	2.08E-06
Selenium	1.77E-05	1.00E+01	1.77E-06
Silver	8.71E-05	5.00E+00	1.74E-05
Sulfur dioxide	1.70E-01	NA	NA
Tin	1.17E-03	1.00E+02	1.17E-05
Zinc	2.25E-10	5.00E+01	4.50E-12

Note: NA = no published AAC value. Methyl mercury is not of concern via the inhalation pathway (HHRAP).

Table 13. Comparison of maximum LET&D/PEWE 24-hour air concentrations with Idaho Acceptable Ambient Concentrations for non-carcinogens on U.S. Highway 20/26.

COPC	24-hr Conc US 20/26 (μg/m^3)	AAC (μg/m^3)	Conc/AAC
Arsenic	1.04E-07	NA	NA
Benzo(a)pyrene	1.46E-07	NA	NA
Chromium	3.03E-05	2.50E+01	1.21E-06
Hexavalent chromium	3.03E-05	NA	NA
1,4-dichlorobenzene	1.67E-08	2.25E+04	7.44E-13
3,3'-dichlorobenzidine	3.88E-07	NA	NA
Bis(2-ethylhexyl phthalate)	1.53E-06	NA	NA
Fluoranthene	5.74E-08	NA	NA
Hexachlorocyclopentadiene	4.90E-07	5.00E+00	9.80E-08
Hydrogen chloride	5.71E-01	3.75E+02	1.52E-03
Mercuric chloride	2.13E-06	2.50E+00	8.51E-07
Mercury – total	9.05E-09	2.50E+00	3.62E-09
Methyl mercury	NA	NA	NA
Nickel	1.74E-04	NA	NA
N-nitrosodipropylamine	1.58E-05	NA	NA
Pyrene	4.95E-08	NA	NA
1,2,3-trichloropropane	3.63E-08	3.00E+03	1.21E-11

Note: NA = no published AAC value. Methyl mercury is not of concern via the inhalation pathway (HHRAP).

9.2.4 Acute Inhalation Risk to a Worker

Maximum inhalation impacts to onsite workers were estimated by an acute hazard quotient (AHQ), which was calculated by dividing the maximum modeled 1-hr air concentration (C_{acute}) at any location on the INL Site by the COPC's acute inhalation exposure criteria (AIECs) taken from the EPA Companion Date Base. An AHQ of less than 1 is considered acceptable (EPA 2005). The results of this assessment (Tables 14 and 15) demonstrate that acute hazards to workers anywhere on the INL Site for both IWTU and ILWMS emissions are well within AIECs. Since AIECs are not worker-specific health criteria, this finding of no acute inhalation impact also applies to members of the public who may be visiting the site.

Table 14. IWTU acute (1-hour) inhalation impacts for a worker anywhere on the INL Site.

COPC	C_{acute} ($\mu g/m^3$)	AIEC (mg/m^3)	AHQ
Aluminum	NA	NA	NA
Arsenic	1.84E-07	1.90E-04	9.70E-07
Barium	7.88E-05	1.50E+00	5.25E-08
Beryllium	1.90E-08	5.00E-03	3.80E-09
Cadmium	3.29E-17	3.00E-02	1.10E-18
Chlorine	8.81E-04	2.10E-01	4.19E-06
Chromium	1.10E-17	1.50E+00	7.33E-21
Hexavalent chromium	1.10E-17	NA	NA
Hydrogen chloride	9.34E-04	2.10E+00	4.45E-07
Lead	1.16E-28	1.50E-01	7.76E-31
Mercuric chloride	NA	NA	NA
Mercury – total	2.44E-08	1.80E-03	1.35E-08
Methyl mercury	NA	NA	NA
Nickel	8.60E-19	6.00E-03	1.43E-19
Selenium	5.15E-09	1.47E+00	3.50E-12
Silver	1.25E-07	3.00E-01	4.16E-10
Zinc	8.33E-19	3.00E+01	2.78E-23
Total			**5.7E-06**

Note: NA = not applicable (no toxicity or HHRAP transport parameter values for COPC)

Table 15. LET&D/PEWE acute (1-hour) inhalation impacts for a worker anywhere on the INL Site.

COPC	C_{acute} ($\mu g/m^3$)	AIEC (mg/m^3)	AHQ
Arsenic	1.85E-11	1.90E-04	9.74E-11
Benzo(a)pyrene	2.94E-11	6.00E-01	4.89E-14
Chromium	1.58E-06	1.50E+00	1.05E-09
Hexavalent chromium	1.58E-06	NA	NA
1,4-dichlorobenzene	2.11E-13	6.00E+02	3.52E-19
3,3'-dichlorobenzidine	1.79E-10	6.00E+00	2.99E-14
Bis(2-ethylhexyl phthalate)	3.64E-09	1.00E+01	3.64E-13
Fluoranthene	2.49E-12	1.50E-02	1.66E-13
Hexachlorocyclopentadiene	1.81E-10	2.00E-01	9.06E-13
Hydrogen chloride	1.28E+01	2.10E+00	6.10E-03
Mercuric chloride	NA	NA	NA
Mercury – total	1.54E-08	1.80E-03	8.58E-09
Methyl mercury	NA	NA	NA
Nickel	5.16E-05	6.00E-03	8.59E-06
N-nitrosodipropylamine	1.88E-07	2.00E-01	9.42E-10
Pyrene	1.86E-12	1.50E+01	1.24E-16
1,2,3-trichloropropane	9.87E-13	6.00E+01	1.65E-17
Total			**6.11E-03**

Note: NA = not applicable (no toxicity or HHRAP transport parameter values for COPC)

9.2.5 Ecological Risk

Risk to ecological receptors was calculated using environmentally-based screening levels (EBSLs), which are COPC soil concentrations back-calculated from conservative ecological receptor exposure and toxicity criteria (Van Horn et al. 1995; ICP 2004). The maximum soil concentration calculated for anywhere on the INL Site was divided by the EBSL to obtain screening level quotients (SLQs). Individual COPC SLQs less than 1.0 and a TSLQ less than 10 are normally used as a target risk criteria in CERCLA risk assessments, although a more conservative TSLQ criterion of 1.0 was specified for this risk assessment in the RAWP. The TSLQ calculated for IWTU COPCs was 0.13, which was mostly due to the barium and silver (Table 16). The TSLQ calculated for the LET&D/PEWE COPC's was 0.0032 (Table 17). Combining these two TSLQs with the TSLQs previously calculated for ETS (0.25) and ICDF (0.26) (ICP 2004) gives a TSLQ for all contributing sources of 0.64, which is less than the conservative 1.0 TSLQ criterion specified in the RAWP. These results demonstrate that the IWTU and all contributing sources in the area will not adversely affect ecological receptors.

Table 16. Ecological screening level quotients for IWTU COPCs.

COPC	Max Soil (mg/kg)	EBSL	SLQ
Aluminum	1.79E-10	5.00E+00	3.59E-11
Arsenic	1.65E-09	1.00E+00	1.65E-09
Barium	1.27E-01	1.66E+00	7.65E-02
Beryllium	1.47E-06	1.00E-01	1.47E-05
Cadmium	5.17E-14	8.18E-02	6.31E-13
Chlorine	1.23E-04	NA	NA
Chromium	1.71E-13	3.31E+00	5.17E-14
Hexavalent chromium	1.72E-13	NA	NA
Hydrogen chloride	1.27E-04	NA	NA
Lead	1.18E-16	5.18E-02	2.28E-15
Mercuric chloride	1.53E-03	9.73E-01	1.58E-03
Mercury – total	0.00E+00	NA	NA
Methyl mercury	3.08E-05	9.73E-01	3.17E-05
Nickel	3.36E-18	2.50E+01	1.34E-19
Selenium	7.95E-09	5.00E-02	1.59E-07
Silver	9.49E-04	2.00E-02	4.75E-02
Zinc	2.45E-18	9.00E-01	2.72E-18
Total (TSLQ)			**1.3E-01**

Note: NA = not applicable (no toxicity or HHRAP transport parameter values for COPC)

Table 17. Ecological screening level quotients for LET&D/PEWE COPCs.

COPC	Max Soil (mg/kg)	EBSL	SLQ
Arsenic	4.53E-12	1.00E+00	4.53E-12
Benzo(a)pyrene	4.56E-06	2.07E-03	2.20E-03
Chromium	1.35E-03	3.31E+00	4.07E-04
Hexavalent chromium	1.36E-03	3.31E+00	4.10E-04
1,4-dichlorobenzene	2.37E-12	NA	NA
3,3'-dichlorobenzidine	1.80E-06	NA	NA
Bis(2-ethylhexyl phthalate)	2.46E-06	2.30E-01	1.07E-05
Fluoranthene	4.53E-07	4.06E+01	NA
Hexachlorocyclopentadiene	3.55E-08	1.00E-01	3.55E-07
Hydrogen chloride	3.90E-02	NA	NA
Mercuric chloride	2.02E-04	9.73E-01	2.08E-04
Mercury – total	NA	NA	NA
Methyl mercury	4.07E-06	9.73E-01	4.18E-06
Nickel	5.21E-07	2.50E+01	2.08E-08
N-nitrosodipropylamine	2.48E-06	NA	NA
Pyrene	1.46E-06	2.43E+01	5.99E-08
1,2,3-trichloropropane	3.41E-12	NA	NA
Total SLQ (TSLQ)			**3.2E-03**

Note: NA = not applicable (no toxicity or HHRAP transport parameter values for COPC)

9.3 Human Health Risk Assessment Uncertainty

Several sources of uncertainty affect the overall estimates of human health impacts (cancer risk and non-cancer hazard index) as calculated in this risk assessment. The sources are generally associated with characterization of COPC emission rates, air modeling, exposure assessment, toxicity values, and risk characterization.

9.3.1 Uncertainty Associated with COPC Emission Rate Characterization

Offgas sampling and analysis has numerous uncertainties associated with it including inherent variability in the analysis, representativeness of the samples, sampling errors, and heterogeneity of the sample matrix. Specific QA/QC procedures used in the ILWMS offgas sampling are contained in their respective emissions inventories (INEEL 2002; INEEL 2003; ICP 2005a; ICP 2005b). In general, the procedures used to select offgas emission rates evaluated in this risk assessment are conservative, meaning the actual emission rates from these facilities are likely to be less than those evaluated here. These conservative assumptions included the use of maximum values from all sampling runs and the use of detection limit values for “nondetect” analytes. In addition, the use of upper bound facility operating times (24/7) and operational lifetimes (15 years) likely overestimate annual average emission rates and the duration over which deposition occurs. These conservative emission rate assumptions produce calculated air concentrations, soil concentrations, and risk estimates that are likely biased high.

Another uncertainty associated with emission rate characterization involves facility process upset conditions that can temporarily increase COPC emission rates over those measured during offgas sampling (EPA 2005). For facilities without site-specific data to estimate the frequency and magnitude of process upsets, EPA 2005 recommends that organics and metal emissions be increased factors of 2.8 and 1.45 respectively, to account for these conditions. Process upsets are not currently anticipated at IWTU due to the stable, uniform operating characteristics of the fluid bed systems. This combined with the conservative assumptions used to estimate maximum emission rates from that facility (EDF-6495) make the need for a process upset correction factor unnecessary for IWTU emissions. For ILWMS, applying the above EPA process upset factors would increase the total ILWMS cancer risk from 4E-08 to 6E-08 and the HI from 0.0032 to 0.0035, which are both an insignificant increase compared to the EPA target criteria (1E-05 risk and 0.25 HI).

9.3.2 Uncertainty Associated with Air Modeling

In general, models are imperfect mathematical tools that attempt to simulate highly complex environmental phenomena. Therefore, significant uncertainty usually exists in modeling output for both air concentration and ground deposition rate. These uncertainties result from imperfect model structures and inaccuracies or natural variability in the model input parameter values. Although ISCST3 is the EPA-preferred refined air dispersion model for this type of risk assessment, it is subject to the same uncertainties.

A major source of model structural uncertainty results when the “straight-line” Gaussian plume model algorithm in ISCST3 is applied for large receptor distances. The Gaussian plume model assumes that atmospheric dispersion conditions (wind direction, wind speed, and turbulence) do not change between the release point and the receptor location over the time interval of the meteorological data (1-hr). Offsite distances from the INTEC are relatively large (e.g., >13 km), and dispersion conditions may change over the time required to transport the contaminants to receptors (>1-hr average). However, published validation studies have indicated that the Gaussian plume model is reasonably reliable for estimating the longer time-averaged (e.g., annual) concentrations and relatively flat terrain conditions evaluated in this risk assessment. Errors in the highest estimated concentrations of 10 - 40% are found to be typical.

A related major source of uncertainty exists in the prediction of model output at specific receptor locations. Because of shifting winds, contaminants may follow trajectories that are not straight, which may cause model predictions at specific downwind locations, especially over the large INL Site distances, to be highly uncertain. Adding to this spatial prediction problem is the uncertainty that exists in the meteorological data file wind vectors. Measurement or processing (time-averaging) errors of 5 to 10 degrees can result in concentration errors of 20 to 70%. Such uncertainties indicate that the precise time and location are in doubt, not necessarily that an estimated concentration does not occur.

For the offsite human health impacts evaluated in this risk assessment, potential underprediction due to this spatial prediction uncertainty is avoided by evaluating exposure scenarios at the point of maximum off-INL impacts (air concentration, deposition) regardless of whether there is an actual human receptor at that location. For example, INTEC main stack annual-average air concentrations at Atomic City, the nearest continually inhabited off-site location, were calculated to be less than half those at the point of maximum off-site impact (INEEL 1999a). Therefore, the air modeling results used in this risk assessment are likely to significantly over predict the actual impacts that might occur to any real public receptor.

9.3.3 Uncertainty Associated with Exposure Assessment

The equations and parameter values specified in the HHRAP used in this assessment are based on many exposure assessment assumptions that also contribute to uncertainties in the final calculated risk values. Most of these assumptions are likely to be conservative, including the assumption of a continuous 40-year exposure time (subsistence farmer scenario), the assumption that food products are produced at the point of maximum air concentration and ground deposition rate, and the assumption that 100% of the receptor's food products are grown at the point of maximum ground deposition rate. Since the error in the final calculated risk value is the sum of the errors in each of these parameter values, these conservative exposure assumptions likely produce overestimates of the actual risks to the public. EPA uncertainty estimates for individual parameters may be found in Appendixes B and C of the HHRAP document (EPA 2005).

9.3.4 Uncertainty Associated with COPC Toxicity

The health impacts calculated in this risk assessment use toxicity criteria from the EPA HHRAP Companion Database, which is continually updated to reflect current values. However, many uncertainties and unknowns are associated with the determination of these toxicity values. They include extrapolation from high to low doses and from animals to humans; species differences in uptake, metabolism, and organ distribution; species differences in target site susceptibility; and human population variability in diet, environment, activity patterns, and for cultural factors. However, safety factors are built into the determination of the final toxicity value to compensate for these sources of uncertainty, which likely result in a bias toward overestimating risk.

9.3.5 Uncertainty Associated with Risk Characterization

In the risk characterization, the assumption was made that the total risk of developing cancer from exposure to all COPCs is the sum of the risk attributed to each individual COPC. Likewise, the potential for the development of non-cancer adverse effects is the sum of the estimated exposure to each individual COPC. This approach, in accordance with EPA guidance, does not account for the possibility that constituents act synergistically or antagonistically. This uncertainty could over or underestimate total risk.

9.4 Ecological Risk Assessment Uncertainty

9.4.1 Uncertainty Associated with Exposure Assessment

EBSLs are modeled using a site use factor (SUF) and exposure duration (ED) parameter. The SUF represents the proportion of a species home range that overlaps the area of contamination. An SUF of 1.0 indicates that the home range is less than or equal to the area of contaminant exposure. For our EBSL calculations, the SUF was assumed to be 1.0 (100% use occurs in the area of contamination) for all groups and species (VanHorn et al. 1995; ICP 2004). Home range is poorly documented for many species and may be highly variable. Exposure duration is also included to account for seasonal use of the site, for example by migratory birds that are only present for 2–3 months of the year. The assumption of 100% exposure in the development of the EBLS is highly conservative and can significantly overestimate the risk at small sites. Finally, the ecological risk assessment is evaluated at the point of maximum ground deposition (and soil concentration) on the INL Site, which is a very conservative screening-level assumption. Exposures to real populations of ecological receptors would actually occur across the INL Site, at locations where the ground deposition rate is much less than at the maximum point.

9.4.2 Uncertainty Associated with Ingestion Rates

Few intake ingestion rate estimates used for terrestrial receptors are based on data in the scientific literature. Food ingestion rates used in the EBSL calculation are calculated using allometric equations available in the literature (Nagy 1987). The use of these values may moderately over or underestimate risk.

9.4.3 Uncertainty Associated with Uptake Factors

Two parameters used in the calculation of EBSLs, prey bioaccumulation factor (BAF) and plant uptake factor (PUF), were assumed to be the greater of either the calculated value or 1.0. This is a conservative assumption that will generally overestimate risk, since less than 40% of the COPCs have PUFs greater than 1.0 and less than 1% of the COPCs have BAFs greater than 1.0. In the absence of specific BAF or PUF, a value of 1.0 was assumed. This assumption could over or underestimate the true dose from the contaminant, and the magnitude of error cannot be quantified.

9.4.4 Uncertainty Associated with Toxicity Reference Values

The EBSLs used in this assessment were developed from toxicity reference values (TRVs) that were revised based on EPA 1999 guidelines. Many uncertainties and unknowns are associated with the determination of these toxicity values. They include extrapolation from high to low doses and from individual laboratory species to multiple species living in a natural environment; species differences in uptake, metabolism, and organ distribution; and species differences in target site susceptibility. Uncertainty factors (UFs) are applied to the TRVs to ensure they are protective and provide a conservative estimate of risk.

9.4.5 Uncertainty Associated with Functional Groups

INL-specific functional groups were designed as an assessment tool that would ensure representatives from all species potentially present at the INL Site (VanHorn et al. 1995). A hypothetical species is developed using input values to the exposure assessment that represents the greatest exposure of the combined functional group members. This provides a very conservative approach and will tend to overestimate risk for actual individual species of ecological receptors.

10. REFERENCES

COS-F-SRH-0141, 2006, "Equipment Data Sheets – Mercury Adsorbers," Idaho Cleanup Project, April 2006.

DOE-ID, 1999, *Work Plan for Waste Areas Groups 6 and 10 Operable Unit 10-04 Comprehensive Remedial Investigation/Feasibility Study*, DOE/ID-10554, Rev. 0, U.S. Department of Energy Idaho Operations Office, April 1999.

DOE-STD-3020-2005, *Specification for HEPA Filters Used by DOE Contractors*, U.S. Department of Energy, December 2005.

EDF-6252, 2005, "Human Health Impacts – 2005 LET&D and PEWE Offgas Sampling," Rev. 0, Idaho National Laboratory, November 1, 2005.

EDF-6495, 2006, "Mass and Energy Balance for Sodium Bearing Waste Integrated Waste Treatment Unit – Modified to Support Emissions Permitting," Rev. 0, Idaho Cleanup Project, May 30, 2006.

EDF-ER-327, 2005, "INEEL CERCLA Disposal Facility Short-term Risk Assessment," Rev. 2, Idaho National Laboratory, January 26, 2005.

EPA, 1987, *On-Site Meteorological Program Guidance for Regulatory Modeling Applications,* EPA-450/4-87-013, U.S. Environmental Protection Agency, June 1987.

EPA, 1995, *User's Guide for the Industrial Source Complex (ISC3) Dispersion Models (Revised)*, EPA-450/B-95-003a, b, U.S. Environmental Protection Agency, 1995.

EPA, 1996, *Meteorological Processor for Regulatory Models (MPRM) User's Guide*, Revised ed., EPA-454/B-96-002, U.S. Environmental Protection Agency, 1996.

EPA, 1998a, *Human Health Risk Assessment Protocol for Hazardous Waste Combustion Facilities – Peer Review Draft*, EPA-530-D-98-001A/B/C, U.S. EPA Office of Solid Waste and Emergency Response, July 1998.

EPA, 1998b, *Region 6 Risk Management Addendum - Draft Human Health Risk Assessment Protocol for Hazardous Waste Combustion Facilities*, EPA-R6-98-002, U.S. Environmental Protection Agency, July 1998.

EPA, 1999, *Screening Level Ecological Risk Assessment Protocol for Hazardous Waste Combustion Facilities - Peer Review Draft*, EPA 530-D-99-001A, U.S. Environmental Protection Agency, 1999.

EPA, 2005, *Human Health Risk Assessment Protocol for Hazardous Waste Combustion Facilities*, EPA520-R-05-006, U.S. Environmental Protection Agency, September 2005.

ICP, 2004, *Human and Ecological Risk Assessment of Air Emissions from the INTEC Liquid Waste Management System*, ICP/EXT-04-00399, Rev. 0, Idaho Cleanup Project, May 2004.

ICP, 2005a, *FY-2005 Liquid Effluent Treatment and Disposal Facility Overhead Effluent Emissions Inventory*, ICP/EXT-05-01019, Rev. 0, Idaho Cleanup Project, October 2005.

ICP, 2005b, *FY-2005 Process Equipment Waste Evaporator Off-gas Emissions Inventory*, ICP/EXT-05-01037, Rev. 0, Idaho Cleanup Project, October 2005.

IDAPA 58.01.01, 2006, "Rules for the Control of Air Pollution in Idaho," Idaho Administrative Procedures Act, Idaho Department of Environmental Quality, 2006.

INEEL, 1999a, *Screening Level Risk Assessment for the New Waste Calcining Facility*, INEEL/EXT-97-00686, Rev. 5a, Idaho National Engineering and Environmental Laboratory, May 1999.

INEEL, 1999b, *Summary of NWCF Calciner Emissions Inventory Data*, INEEL/EXT-99-01190, Rev. 0, Idaho National Engineering and Environmental Laboratory, November 1999.

INEEL, 2002, *NWCF Evaporator Tank System 2001 Offgas Emissions Inventory*, INEEL/EXT-02-00198, Rev. 0, Idaho National Engineering and Environmental Laboratory, February 2002.

INEEL, 2003, *FY-2003 Liquid Effluent Treatment and Disposal Facility Overhead Effluent Emissions Inventory*, INEEL/INT-03-01181, Rev. 0, Idaho National Engineering and Environmental Laboratory, 2003.

INEEL, 2004a, *Phase 2 THOR Steam Reforming Tests for Sodium-Bearing Waste Treatment*, INEEL/EXT/04-01493, Rev. 0, Idaho Cleanup Project, January 2004.

INEEL, 2004b, *Feed Composition for the Sodium-Bearing Waste Treatment Process*, INEEL/EXT-2000-01378, Rev. 4, Idaho Cleanup Project, June 2004.

Nagy, K. A., 1987, Field Metabolic Rate and Food Requirement Scaling in Mammals and Birds, Ecological Mono. 57, 111–128.

Ramsdell, J. V. Jr., C. A. Simonen, and K. W. Burk, 1994, "Regional Atmospheric Transport Code for Hanford Emission Tracking (RATCHET)," PNWD-2224 HEDR, Battelle Pacific Northwest Laboratories, Richland, Washington, February 1994.

RT-ESTD-PMR-001, 2006, *Pilot Plant Test Preliminary Completion Report for Treating Sodium-Bearing Waste Surrogates Using the THOR® Steam Reforming Process – Carbonate Flowsheet*, Rev. 0, THOR Treatment Technologies and Washington Group International, October 2006.

VanHorn, R. L, N. L. Hampton, and R. C. Morris, 1995, *Draft Guidance Manual for Conducting Screening Level Ecological Risk Assessment at the INEL*, INEL-95/0190, Idaho National Engineering Laboratory, EG&G Idaho, Inc., Idaho Falls, Idaho, April 1995.

Appendix A

LET&D and PEWE COPC Offgas Emission Rates (from INEEL 2003, ICP 2005a, ICP 2005b)

Appendix A

LET&D and PEWE COPC Offgas Emission Rates (from INEEL 2003, ICP 2005a, ICP 2005b)

Table A-1. LET&D "anion" emission rates from offgas measurements (INEEL 2003).

Analyte	CAS No.	Detect ? LET&D	Transport Data?	Retain as COPC?	Emission Rate (g/s)
Hydrogen chloride	7647-01-0	Yes	Yes	Yes	1.97E+00
Nitrate (as HNO_3)	7697-37-2	Yes	Yes	Yes	2.63E-01
Nitrite	14797-65-0	Yes	No	No	–
Fluoride (as HF)	7664-39-3	No	Yes	Yes	1.33E-03

Table A-2. LET&D metal emission rates from offgas measurements (INEEL 2003).

Analyte	CAS No.	Detect ? LET&D	Transport Data?	Retain as COPC?	Emission Rate (g/s)	
					Hourly	Annual
Aluminum	7429-90-5	Yes	Yes	Yes	1.10E-04	2.51E-05
Antimony	7440-36-0	No	Yes	Yes	5.08E-06	1.16E-06
Arsenic	7440-38-2	No	Yes	Yes	1.82E-06	4.16E-07
Barium	7440-39-3	Yes	Yes	Yes	1.00E-05	2.29E-06
Beryllium	7440-41-7	No	No	No	–	–
Cadmium	7440-43-9	No	Yes	Yes	3.57E-07	8.16E-08
Calcium	7440-70-2	Yes	No	No[a]	–	–
Chromium	7440-47-3	Yes	Yes	Yes	5.32E-04	1.21E-04
Cobalt	7440-48-4	No	No	No	–	–
Copper	7440-50-8	Yes	Yes	Yes	1.97E-05	4.49E-06
Iron	7439-89-6	Yes	No	No[a]	–	–
Lead	7439-92-1	Yes	Yes	Yes	2.68E-06	6.11E-07
Manganese	7439-96-5	Yes	Yes	Yes	8.01E-05	1.83E-05
Mercury	7439-97-6	Yes	Yes	Yes	6.84E-05	1.56E-05
Nickel	7440-02-0	Yes	Yes	Yes	3.04E-03	6.94E-04
Phosphorus	PHQ000	Yes	No	No[a]	–	–
Potassium	7440-09-7	Yes	No	No[a]	–	–
Selenium	7782-49-2	No	Yes	Yes	2.05E-06	4.69E-07
Silver	7440-22-4	No	Yes	Yes	2.33E-06	5.32E-07
Sodium	7440-23-5	Yes	No	No[a]	–	–
Thallium	7440-28-0	No	Yes	Yes	4.81E-06	1.10E-06
Vanadium	7440-62-2	No	No	No	–	–
Zinc	7440-66-6	Yes	Yes	Yes	1.47E-04	3.35E-05

a. No toxicity data; not toxic at trace environmental levels.

Table A-3. LET&D SVOC emission rates from offgas measurements (ICP 2005a).

Analyte	CAS No.	Detect ? LET&D	Transport Data?	Retain as COPC?	Emission Rate (g/s)	
					Hourly	Annual
Acenaphthene	83-32-9	No	Yes	Yes	9.03E-07	2.06E-07
Acenaphthylene	208-96-8	No	No	No	–	–
Acetophenone	98-86-2	No	Yes	Yes	2.68E-06	6.12E-07
Aniline	62-53-3	No	Yes	Yes	9.94E-06	2.27E-06
Anthracene	120-12-7	No	Yes	Yes	8.13E-07	1.86E-07
Benzaldehyde	100-52-7	No	Yes	Yes	1.76E-06	4.01E-07
Benzidine	92-87-5	No	No	No	–	–
Benzoic acid	65-85-0	Yes	Yes	Yes	7.32E-05	1.67E-05
Benzo(a)pyrene (BaP)	50-32-8	No	Yes	Yes	2.43E-06	5.54E-07
Benzo(a)anthracene	56-55-3	No	Yes	Yes	included in BaP	
Benzo(b)fluoranthene	205-99-2	No	Yes	Yes	included in BaP	
Benzo(k)fluoranthene	207-08-9	No	Yes	Yes	included in BaP	
Chrysene	218-01-9	No	Yes	Yes	included in BaP	
Dibenz(a,h)anthracene	53-70-3	No	Yes	Yes	included in BaP	
Indeno(1,2,3-cd)pyrene	193-39-5	No	Yes	Yes	included in BaP	
Benzo(ghi)perylene	191-24-2	No	No	No	–	–
Benzonitrile	100-47-0	No	No	No	–	–
Benzyl alcohol	100-51-6	No	Yes	Yes	1.81E-05	4.12E-06
bis(2-Chloroethoxy)methane	111-91-1	No	No	No	–	–
bis(2-Chloroethyl) ether	111-44-4	No	Yes	Yes	8.49E-07	1.94E-07
bis(2-Ethylhexyl) phthalate	117-81-7	Yes	Yes	Yes	2.62E-05	5.98E-06
4-Bromophenyl phenyl ether	101-55-3	No	Yes	Yes	7.32E-07	1.67E-07
Butyl benzyl phthalate	85-68-7	No	Yes	Yes	1.35E-06	3.09E-07
Carbazole	86-74-8	No	No	No	–	–
4-Chloro-3-methylphenol	59-50-7	No	Yes	Yes	2.44E-06	5.57E-07
4-Chloroaniline	106-47-8	No	Yes	Yes	5.78E-06	1.32E-06
2-Chloronaphthalene	91-58-7	No	Yes	Yes	7.23E-07	1.65E-07
2-Chlorophenol	95-57-8	No	Yes	Yes	8.22E-07	1.88E-07
4-Chlorophenyl phenyl ether	7005-72-36	No	No	No	–	–
Di-n-butyl phthalate	84-74-2	No	Yes	Yes	4.61E-06	1.05E-06
Di-n-octyl phthalate	117-84-0	No	Yes	Yes	1.08E-06	2.47E-07
Dibenzofuran	132-64-9	No	No	No	–	–
1,2-Dichlorobenzene	95-50-1	No	Yes	Yes	Included in VOCs	
1,3-Dichlorobenzene	541-73-1	No	Yes	Yes	Included in VOCs	
1,4-Dichlorobenzene	106-46-7	No	Yes	Yes	Included in VOCs	
3,3'-Dichlorobenzidine	91-94-1	No	Yes	Yes	6.32E-06	1.44E-06

Table A-3. (continued).

Analyte	CAS No.	Detect ? LET&D	Transport Data?	Retain as COPC?	Emission Rate (g/s)	
					Hourly	Annual
2,4-Dichlorophenol	120-83-2	No	Yes	Yes	1.02E-06	2.32E-07
Diethyl phthalate	84-66-2	No	Yes	Yes	8.31E-07	1.90E-07
Dimethyl phthalate	105-67-9	No	Yes	Yes	6.96E-07	1.59E-07
2,4-Dimethylphenol	131-11-3	No	Yes	Yes	2.53E-06	5.77E-07
4,6-Dinitro-2-methylphenol	534-52-1	No	No	No	–	–
2,4-Dinitrophenol	51-28-5	No	Yes	Yes	1.08E-05	2.47E-06
2,4-Dinitrotoluene	121-14-2	No	Yes	Yes	1.35E-06	3.09E-07
2,6-Dinitrotoluene	606-20-2	No	Yes	Yes	9.25E-07	2.11E-07
1,2-Diphenylhydrazine	122-66-7	No	No	No	–	–
Fluoranthene	206-44-0	No	Yes	Yes	8.67E-07	1.98E-07
Fluorene	86-73-7	No	Yes	Yes	1.17E-06	2.68E-07
Hexachlorocyclopentadiene	77-47-4	No	Yes	Yes	7.41E-06	1.69E-06
Hexachlorobenzene	118-74-1	No	Yes	Yes	1.17E-06	2.68E-07
Hexachlorobutadiene	87-68-3	No	Yes	Yes	Included in VOCs	
Hexachloroethane	67-72-1	No	Yes	Yes	9.03E-07	2.06E-07
Isophorone	78-59-1	No	Yes	Yes	8.58E-07	1.96E-07
2-Methylnaphthalene	91-57-6	No	No	No	–	–
2-Methylphenol	95-48-7	No	Yes	Yes	2.26E-06	5.16E-07
3-Methylphenol & 4-Methylphenol	65794-96-9	No	No	No	–	–
N-Nitrosodi-n-propylamine	621-64-7	No	Yes	Yes	9.94E-07	2.27E-07
N-Nitrosodimethylamine	62-75-9	Yes	Yes	Yes	2.38E-04	5.43E-05
N-Nitrosodiphenylamine	86-30-6	No	Yes	Yes	8.94E-07	2.04E-07
Naphthalene	91-20-3	No	Yes	Yes	9.03E-07	2.06E-07
2-Nitroaniline	88-74-4	No	Yes	Yes	1.17E-06	2.68E-07
3-Nitroaniline	99-09-2	No	Yes	Yes	2.59E-06	5.91E-07
4-Nitroaniline	100-01-6	No	Yes	Yes	2.26E-06	5.16E-07
Nitrobenzene	98-95-1	No	Yes	Yes	1.48E-06	3.38E-07
2-Nitrophenol	88-75-5	No	No	No	–	–
4-Nitrophenol	100-02-7	No	Yes	Yes	4.34E-06	9.90E-07
2,2'-Oxybis(1-Chloropropane)	108-60-1	No	No	No	–	–
Pentachlorobenzene	608-93-5	No	Yes	Yes	9.94E-07	2.27E-07
Pentachloronitrobenzene	82-68-8	No	Yes	Yes	1.17E-06	2.68E-07
Pentachlorophenol	87-86-5	No	Yes	Yes	1.08E-05	2.47E-06
Phenanthrene	85-01-8	No	Yes	No	8.94E-07	2.04E-07
Phenol	108-95-2	No	Yes	Yes	1.20E-06	2.75E-07
Pyrene	129-00-0	No	Yes	Yes	7.50E-07	1.71E-07
Pyridine	110-86-1	No	No	No	–	–

Table A-3. (continued).

Analyte	CAS No.	Detect ? LET&D	Transport Data?	Retain as COPC?	Emission Rate (g/s) Hourly	Emission Rate (g/s) Annual
1,2,4,5-Tetrachlorobenzene	95-94-3	No	No	No	–	–
1,2,4-Trichlorobenzene	120-82-1	No	Yes	Yes	Included in VOCs	
2,4,5-Trichlorophenol	95-95-4	No	Yes	Yes	1.35E-06	3.09E-07
2,4,6-Trichlorophenol	88-06-2	No	Yes	Yes	1.17E-06	2.68E-07

Table A-4. LET&D VOC emission rates from offgas measurements (ICP 2005a).

Analyte	CAS No.	Detect ? LET&D	Risk factor avail?	Transport Data?	Emission Rate (g/s) Hourly	Emission Rate (g/s) Annual
Acetaldehyde	75-07-0	No	Yes	Yes	1.02E-05	2.33E-06
Acetone	67-64-1	Yes	Yes	Yes	7.13E-04	1.63E-04
Acrylonitrile	107-13-1	No	Yes	Yes	4.57E-06	1.04E-06
Benzene	71-43-2	No	Yes	Yes	3.70E-07	8.45E-08
Bromobenzene	108-86-1	No	Yes	Yes	2.12E-07	4.84E-08
Bromochloromethane	74-97-5	No	No	No	–	–
Bromodichloromethane	75-27-4	No	Yes	Yes	7.83E-07	1.79E-07
Bromoform	75-25-2	No	Yes	Yes	2.61E-07	5.96E-08
Bromomethane	74-83-9	No	Yes	Yes	8.09E-07	1.85E-07
2-Butanone (MEK)	78-93-3	No	Yes	Yes	3.40E-06	7.77E-07
n-Butylbenzene	104-51-8	No	No	No	–	–
sec-Butylbenzene	135-98-8	No	No	No	–	–
tert-Butylbenzene	98-06-6	No	No	No	–	–
Carbon disulfide	75-15-0	No	Yes	Yes	1.79E-07	4.10E-08
Carbon tetrachloride	56-23-5	No	Yes	Yes	2.49E-07	5.68E-08
Chlorobenzene	108-90-7	No	Yes	Yes	2.05E-07	4.67E-08
Chlorodibromomethane	124-48-1	No	Yes	Yes	3.59E-07	8.20E-08
Chloroethane	75-00-3	No	Yes	Yes	4.77E-07	1.09E-07
Chloroform	67-66-3	Yes	Yes	Yes	8.25E-06	1.88E-06
Chloromethane	74-87-3	Yes	Yes	Yes	6.72E-06	1.53E-06
2-Chlorotoluene	95-49-8	No	No	No	–	–
4-Chlorotoluene	106-43-4	No	No	No	–	–
1,2-Dibromo-3-chloropropane	96-12-8	No	Yes	Yes	7.51E-07	1.71E-07
1,2-Dibromoethane (EDB)	106-93-4	No	Yes	Yes	3.18E-07	7.26E-08
Dibromomethane	75-95-3	No	Yes	Yes	3.34E-07	7.64E-08
1,2-Dichlorobenzene	95-50-1	No	Yes	Yes	2.04E-07	4.66E-08
1,3-Dichlorobenzene	541-73-1	No	Yes	Yes	2.12E-07	4.84E-08
1,4-Dichlorobenzene	106-46-7	No	Yes	Yes	2.53E-07	5.77E-08
Dichlorodifluoromethane	75-71-8	No	Yes	Yes	2.45E-07	5.59E-08

Table A-4. (continued).

Analyte	CAS No.	Detect ? LET&D	Risk factor avail?	Transport Data?	Emission Rate (g/s)	
					Hourly	Annual
1,1-Dichloroethane	75-34-3	No	Yes	Yes	1.85E-07	4.23E-08
1,2-Dichloroethane	107-06-2	No	Yes	Yes	1.88E-07	4.28E-08
1,1-Dichloroethene	75-35-4	No	Yes	Yes	2.24E-07	5.11E-08
cis-1,2-Dichloroethene	156-59-2	No	Yes	Yes	2.12E-07	4.84E-08
trans-1,2-Dichloroethene	156-60-5	No	Yes	Yes	1.71E-07	3.91E-08
1,2-Dichloropropane	78-87-5	No	Yes	Yes	1.88E-07	4.28E-08
1,3-Dichloropropane	142-28-9	No	No	No	–	–
2,2-Dichloropropane	594-20-7	No	No	No	–	–
1,1-Dichloropropene	563-58-6	No	No	No	–	–
cis-1,3-Dichloropropene	542-75-6	No	Yes	Yes	1.66E-07	3.78E-08
trans-1,3-Dichloropropene	10061-02-6	No	No	No	–	–
Ethylbenzene	100-41-4	No	Yes	Yes	1.63E-07	3.73E-08
Hexachlorobutadiene	87-68-3	No	Yes	Yes	1.96E-07	4.47E-08
2-Hexanone	591-78-6	No	No	No	–	–
Isopropylbenzene	98-82-8	No	No	No	–	–
p-Isopropyltoluene	99-87-6	No	No	No	–	–
Methylene chloride	75-09-2	Yes	Yes	Yes	5.22E-05	1.19E-05
4-Methyl-2-pentanone (MIBK)	108-10-1	No	Yes	Yes	8.97E-07	2.05E-07
Naphthalene	91-20-3	No	Yes	Yes	2.94E-07	6.71E-08
n-Propylbenzene	103-65-1	No	No	No	–	–
Styrene	100-42-5	No	Yes	Yes	1.88E-07	4.28E-08
1,1,1,2-Tetrachloroethane	630-20-6	No	Yes	Yes	2.04E-07	4.66E-08
1,1,2,2-Tetrachloroethane	79-34-5	No	Yes	Yes	2.77E-07	6.33E-08
Tetrachloroethene	127-18-4	No	Yes	Yes	1.91E-07	4.35E-08
Toluene	108-88-3	No	Yes	Yes	1.96E-07	4.47E-08
1,2,3-Trichlorobenzene	87-61-6	No	No	No	–	–
1,2,4-Trichlorobenzene	120-82-1	No	Yes	Yes	2.69E-07	6.15E-08
1,1,1-Trichloroethane	71-55-6	No	Yes	Yes	1.96E-07	4.47E-08
1,1,2-Trichloroethane	79-00-5	No	Yes	Yes	3.59E-07	8.20E-08
Trichloroethene	79-01-6	No	Yes	Yes	2.69E-07	6.15E-08
Trichlorofluoromethane	75-69-4	No	Yes	Yes	2.77E-07	6.33E-08
1,2,3-Trichloropropane	96-18-4	No	Yes	Yes	5.47E-07	1.25E-07
1,2,4-Trimethylbenzene	95-63-6	No	No	No	–	–
1,3,5-Trimethylbenzene	108-67-8	No	No	No	–	–
Vinyl chloride	75-01-4	No	Yes	Yes	3.10E-07	7.08E-08
o-Xylene	95-47-6	No	Yes	Yes	2.37E-07	5.40E-08
m-Xylene & p-Xylene	108-38-3	No	Yes	Yes	3.34E-07	7.64E-08

Table A-5. PEWE "anion" emission rates from offgas measurements (ICP 2005b).

Analyte	CAS No.	Detect PEWE?	Transport Data?	Retain as COPC?	Emission Rate (g/s)
Hydrogen chloride	7647-01-0	Yes	Yes	Yes	2.21E-07
Chlorine	7782-50-5	Yes	Yes	Yes	2.35E-07
Nitrate (as HNO_3)	7697-37-2	Yes	Yes	Yes	3.96E-05
Fluoride (as HF)	7664-39-3	No	Yes	Yes	5.41E-07

Table A-6. PEWE metal emission rates from offgas measurements (ICP 2005b).

Analyte	CAS No.	Detect - PEWE?	Transport Data?	Retain as COPC?	Emission Rate (g/s)	
					Hourly	Annual
Aluminum	7429-90-5	Yes	Yes	Yes	3.35E-08	7.66E-09
Antimony	7440-36-0	No	Yes	Yes	3.10E-10	7.08E-11
Arsenic	7440-38-2	No	Yes	Yes	3.59E-10	8.20E-11
Barium	7440-39-3	Yes	Yes	Yes	4.37E-09	9.97E-10
Beryllium	7440-41-7	No	Yes	Yes	2.32E-10	5.30E-11
Cadmium	7440-43-9	No	Yes	Yes	1.28E-10	2.92E-11
Calcium	7440-70-2	Yes	No	No[a]	–	–
Chromium	7440-47-3	Yes	Yes	Yes	2.83E-09	6.47E-10
Cobalt	7440-48-4	No	No	No	–	–
Copper	7440-50-8	Yes	Yes	Yes	1.70E-09	3.89E-10
Iron	7439-89-6	Yes	No	No[a]	–	–
Lead	7439-92-1	Yes	Yes	Yes	2.30E-10	5.25E-11
Manganese	7439-96-5	Yes	Yes	Yes	4.06E-10	9.26E-11
Mercury	7439-97-6	Yes	Yes	Yes	9.06E-09	2.07E-09
Nickel	7440-02-0	Yes	Yes	Yes	2.00E-09	4.56E-10
Phosphorus	PHQ000	Yes	No	No[a]	–	–
Potassium	7440-09-7	Yes	No	No[a]	–	–
Selenium	7782-49-2	No	Yes	Yes	3.74E-10	8.55E-11
Silver	7440-22-4	No	Yes	Yes	3.27E-10	7.47E-11
Sodium	7440-23-5	Yes	No	No[a]	–	–
Thallium	7440-28-0	No	Yes	Yes	8.80E-10	2.01E-10
Vanadium	7440-62-2	No	No	No	–	–
Zinc	7440-66-6	Yes	Yes	Yes	7.63E-09	1.74E-09

a. No toxicity data; not toxic at trace environmental levels.

Table A-7. PEWE SVOC emission rates from offgas measurements (ICP 2005b).

Analyte	CAS No.	Detect - PEWE?	Transport Data?	Retain as COPC?	Emission Rate (g/s)	
					Hourly	Annual
Acenaphthene	83-32-9	No	Yes	Yes	4.04E-09	9.23E-10
Acenaphthylene	208-96-8	No	No	No	–	–
Acetophenone	98-86-2	No	Yes	Yes	1.62E-08	3.69E-09
Aniline	62-53-3	No	Yes	Yes	5.01E-08	1.14E-08
Anthracene	120-12-7	No	Yes	Yes	3.80E-09	8.68E-10
Benzaldehyde	100-52-7	No	Yes	Yes	1.48E-08	3.37E-09
Benzidine	92-87-5	No	No	No	–	–
Benzoic acid	65-85-0	No	Yes	Yes	2.62E-07	5.97E-08
Benzo(a)pyrene (BaP)	50-32-8	No	Yes	Yes	1.20E-08	2.74E-09
Benzo(a)anthracene	56-55-3	No	Yes	Yes	included in BaP	
Benzo(b)fluoranthene	205-99-2	No	Yes	Yes	included in BaP	
Benzo(k)fluoranthene	207-08-9	No	Yes	Yes	included in BaP	
Chrysene	218-01-9	No	Yes	Yes	included in BaP	
Dibenz(a,h)anthracene	53-70-3	No	Yes	Yes	included in BaP	
Indeno(1,2,3-cd)pyrene	193-39-5	No	Yes	Yes	included in BaP	
Benzo(ghi)perylene	191-24-2	No	No	No	–	–
Benzonitrile	100-47-0	No	No	No	–	–
Benzyl alcohol	100-51-6	No	Yes	Yes	2.38E-07	5.43E-08
bis(2-Chloroethoxy)methane	111-91-1	No	No	No	–	–
bis(2-Chloroethyl) ether	111-44-4	No	Yes	Yes	4.52E-09	1.03E-09
bis(2-Ethylhexyl) phthalate	117-81-7	Yes	Yes	Yes	1.40E-07	3.20E-08
4-Bromophenyl phenyl ether	101-55-3	No	Yes	Yes	3.80E-09	8.68E-10
Butyl benzyl phthalate	85-68-7	No	Yes	Yes	5.23E-09	1.19E-09
Carbazole	86-74-8	No	No	No	–	–
4-Chloro-3-methylphenol	59-50-7	No	Yes	Yes	6.18E-09	1.41E-09
4-Chloroaniline	106-47-8	No	Yes	Yes	4.04E-08	9.23E-09
2-Chloronaphthalene	91-58-7	No	Yes	Yes	3.80E-09	8.68E-10
2-Chlorophenol	95-57-8	No	Yes	Yes	4.05E-09	9.25E-10
4-Chlorophenyl phenyl ether	7005-72-36	No	No	No	–	–
Di-n-butyl phthalate	84-74-2	No	Yes	Yes	4.75E-08	1.09E-08
Di-n-octyl phthalate	117-84-0	No	Yes	Yes	5.48E-09	1.25E-09
Dibenzofuran	132-64-9	No	No	No	–	–
1,2-Dichlorobenzene	95-50-1	No	Yes	Yes	Included in VOCs	

Table A-7. (continued).

Analyte	CAS No.	Detect - PEWE?	Transport Data?	Retain as COPC?	Emission Rate (g/s)	
					Hourly	Annual
1,3-Dichlorobenzene	541-73-1	No	Yes	Yes	Included in VOCs	
1,4-Dichlorobenzene	106-46-7	No	Yes	Yes	Included in VOCs	
3,3'-Dichlorobenzidine	91-94-1	No	Yes	Yes	4.99E-08	1.14E-08
2,4-Dichlorophenol	120-83-2	No	Yes	Yes	4.75E-09	1.09E-09
Diethyl phthalate	84-66-2	No	Yes	Yes	5.94E-09	1.36E-09
Dimethyl phthalate	105-67-9	No	Yes	Yes	3.80E-09	8.68E-10
2,4-Dimethylphenol	131-11-3	No	Yes	Yes	2.62E-08	5.97E-09
4,6-Dinitro-2-methylphenol	534-52-1	No	No	No	–	–
2,4-Dinitrophenol	51-28-5	No	Yes	Yes	1.24E-07	2.82E-08
2,4-Dinitrotoluene	121-14-2	No	Yes	Yes	4.77E-09	1.09E-09
2,6-Dinitrotoluene	606-20-2	No	Yes	Yes	4.52E-09	1.03E-09
1,2-Diphenylhydrazine	122-66-7	No	No	No	–	–
Fluoranthene	206-44-0	No	Yes	Yes	4.05E-09	9.25E-10
Fluorene	86-73-7	No	Yes	Yes	4.05E-09	9.25E-10
Hexachlorocyclopentadiene	77-47-4	No	Yes	Yes	7.13E-08	1.63E-08
Hexachlorobenzene	118-74-1	No	Yes	Yes	4.28E-09	9.77E-10
Hexachlorobutadiene	87-68-3	No	Yes	Yes	Included in VOCs	
Hexachloroethane	67-72-1	No	Yes	Yes	5.48E-09	1.25E-09
Isophorone	78-59-1	No	Yes	Yes	5.01E-09	1.14E-09
2-Methylnaphthalene	91-57-6	No	No	No	–	–
2-Methylphenol	95-48-7	No	Yes	Yes	2.07E-08	4.73E-09
3-Methylphenol & 4-Methylphenol	65794-96-9	No	No	No	–	–
N-Nitrosodi-n-propylamine	621-64-7	No	Yes	Yes	4.28E-09	9.77E-10
N-Nitrosodimethylamine	62-75-9	No	Yes	Yes	1.28E-08	2.93E-09
N-Nitrosodiphenylamine	86-30-6	No	Yes	Yes	3.80E-09	8.68E-10
Naphthalene	91-20-3	No	Yes	Yes	4.52E-09	1.03E-09
2-Nitroaniline	88-74-4	No	Yes	Yes	4.28E-09	9.77E-10
3-Nitroaniline	99-09-2	No	Yes	Yes	1.62E-08	3.70E-09
4-Nitroaniline	100-01-6	No	Yes	Yes	1.50E-08	3.43E-09
Nitrobenzene	98-95-1	No	Yes	Yes	4.52E-09	1.03E-09
2-Nitrophenol	88-75-5	No	No	No	–	–
4-Nitrophenol	100-02-7	No	Yes	Yes	2.38E-08	5.43E-09
2,2'-Oxybis(1-Chloropropane)	108-60-1	No	No	No	–	–
Pentachlorobenzene	608-93-5	No	Yes	Yes	4.04E-09	9.23E-10

Table A-7. (continued).

Analyte	CAS No.	Detect - PEWE?	Transport Data?	Retain as COPC?	Emission Rate (g/s)	
					Hourly	Annual
Pentachloronitrobenzene	82-68-8	No	Yes	Yes	4.28E-09	9.77E-10
Pentachlorophenol	87-86-5	No	Yes	Yes	1.33E-07	3.04E-08
Phenanthrene	85-01-8	No	No	No	–	–
Phenol	108-95-2	No	Yes	Yes	6.89E-09	1.57E-09
Pyrene	129-00-0	No	Yes	Yes	4.05E-09	9.25E-10
Pyridine	110-86-1	No	No	No	–	–
1,2,4,5-Tetrachlorobenzene	95-94-3	No	No	No	–	–
1,2,4-Trichlorobenzene	120-82-1	No	Yes	Yes	Included in VOCs	
2,4,5-Trichlorophenol	95-95-4	No	Yes	Yes	1.02E-08	2.33E-09
2,4,6-Trichlorophenol	88-06-2	No	Yes	Yes	1.18E-03	5.91E-04

Table A-8. PEWE VOC emission rates from offgas measurements (ICP 2005b).

Analyte	CAS No.	Detect - PEWE?	Transport Data?	Retain as COPC?	Emission Rate (g/s)	
					Hourly	Annual
Acetaldehyde	75-07-0	No	Yes	Yes	4.21E-08	9.60E-09
Acetone	67-64-1	Yes	Yes	Yes	8.66E-07	1.98E-07
Acrylonitrile	107-13-1	No	Yes	Yes	2.09E-08	4.76E-09
Benzene	71-43-2	No	Yes	Yes	8.60E-09	1.96E-09
Bromobenzene	108-86-1	No	Yes	Yes	1.13E-09	2.58E-10
Bromochloromethane	74-97-5	No	No	No	–	–
Bromodichloromethane	75-27-4	No	Yes	Yes	1.07E-09	2.45E-10
Bromoform	75-25-2	No	Yes	Yes	1.30E-09	2.98E-10
Bromomethane	74-83-9	No	Yes	Yes	1.83E-09	4.17E-10
2-Butanone (MEK)	78-93-3	No	Yes	Yes	8.52E-08	1.94E-08
n-Butylbenzene	104-51-8	No	No	No	–	–
sec-Butylbenzene	135-98-8	No	No	No	–	–
tert-Butylbenzene	98-06-6	No	No	No	–	–
Carbon disulfide	75-15-0	No	Yes	Yes	8.60E-10	1.96E-10
Carbon tetrachloride	56-23-5	No	Yes	Yes	8.69E-10	1.98E-10
Chlorobenzene	108-90-7	No	Yes	Yes	8.66E-10	1.98E-10
Chlorodibromomethane	124-48-1	No	No	Yes	8.69E-10	1.98E-10
Chloroethane	75-00-3	No	Yes	Yes	2.10E-09	4.80E-10
Chloroform	67-66-3	No	Yes	Yes	4.69E-09	1.07E-09

Table A-8. (continued).

Analyte	CAS No.	Detect - PEWE?	Transport Data?	Retain as COPC?	Emission Rate (g/s)	
					Hourly	Annual
Chloromethane	74-87-3	No	Yes	Yes	1.61E-09	3.67E-10
2-Chlorotoluene	95-49-8	No	No	No	–	–
4-Chlorotoluene	106-43-4	No	No	No	–	–
1,2-Dibromo-3-chloropropane	96-12-8	No	Yes	Yes	3.39E-09	7.74E-10
1,2-Dibromoethane (EDB)	106-93-4	No	Yes	Yes	9.56E-10	2.18E-10
Dibromomethane	74-95-3	No	Yes	Yes	1.39E-09	3.17E-10
1,2-Dichlorobenzene	95-50-1	No	Yes	Yes	1.13E-09	2.58E-10
1,3-Dichlorobenzene	541-73-1	No	Yes	Yes	1.30E-09	2.98E-10
1,4-Dichlorobenzene	106-46-7	No	Yes	Yes	1.48E-09	3.37E-10
Dichlorodifluoromethane	75-71-8	No	Yes	Yes	1.13E-09	2.58E-10
1,1-Dichloroethane	75-34-3	No	Yes	Yes	7.92E-10	1.81E-10
1,2-Dichloroethane	107-06-2	No	Yes	Yes	1.04E-09	2.38E-10
1,1-Dichloroethene	75-35-4	No	Yes	Yes	1.13E-09	2.58E-10
cis-1,2-Dichloroethene	156-59-2	No	Yes	Yes	1.04E-09	2.38E-10
trans-1,2-Dichloroethene	156-60-5	No	Yes	Yes	7.91E-10	1.81E-10
1,2-Dichloropropane	78-87-5	No	Yes	Yes	9.56E-10	2.18E-10
1,3-Dichloropropane	142-28-9	No	No	No	–	–
2,2-Dichloropropane	594-20-7	No	No	No	–	–
1,1-Dichloropropene	563-58-6	No	No	No	–	–
cis-1,3-Dichloropropene	542-75-6	No	Yes	Yes	8.08E-10	1.85E-10
trans-1,3-Dichloropropene	10061-02-6	No	No	No	–	–
Ethylbenzene	100-41-4	No	Yes	Yes	6.78E-10	1.55E-10
Hexachlorobutadiene	87-68-3	No	Yes	Yes	8.60E-10	1.96E-10
2-Hexanone	591-78-6	No	No	No	–	–
Isopropylbenzene	98-82-8	No	No	No	–	–
p-Isopropyltoluene	99-87-6	No	No	No	–	–
Methylene chloride	75-09-2	Yes	Yes	Yes	9.77E-08	2.23E-08
4-Methyl-2-pentanone (MIBK)	108-10-1	No	Yes	Yes	6.18E-09	1.41E-09
Naphthalene	91-20-3	No	Yes	Yes	1.39E-09	3.17E-10
n-Propylbenzene	103-65-1	No	No	No	–	–
Styrene	100-42-5	No	Yes	Yes	9.56E-10	2.18E-10
1,1,1,2-Tetrachloroethane	630-20-6	No	Yes	Yes	9.56E-10	2.18E-10
1,1,2,2-Tetrachloroethane	79-34-5	No	Yes	Yes	1.39E-09	3.17E-10
Tetrachloroethene	127-18-4	No	Yes	Yes	8.69E-10	1.98E-10

Table A-8. (continued).

Analyte	CAS No.	Detect - PEWE?	Transport Data?	Retain as COPC?	Emission Rate (g/s)	
					Hourly	Annual
Toluene	108-88-3	No	Yes	Yes	5.19E-09	1.19E-09
1,2,3-Trichlorobenzene	87-61-6	No	No	No	–	–
1,2,4-Trichlorobenzene	120-82-1	No	Yes	Yes	1.39E-09	3.17E-10
1,1,1-Trichloroethane	71-55-6	No	Yes	Yes	1.22E-09	2.80E-10
1,1,2-Trichloroethane	79-00-5	No	Yes	Yes	1.30E-09	2.98E-10
Trichloroethene	79-01-6	No	Yes	Yes	1.83E-09	4.17E-10
Trichlorofluoromethane	75-69-4	No	Yes	Yes	1.61E-09	3.68E-10
1,2,3-Trichloropropane	96-18-4	No	Yes	Yes	2.09E-09	4.76E-10
1,2,4-Trimethylbenzene	94-63-6	No	No	No	–	–
1,3,5-Trimethylbenzene	108-67-8	No	No	No	–	–
Vinyl chloride	75-01-4	No	Yes	Yes	8.17E-10	1.87E-10
o-Xylene	95-47-6	No	Yes	Yes	1.13E-09	2.57E-10
m-Xylene & p-Xylene	108-38-3	No	Yes	Yes	1.48E-09	3.37E-10

Appendix B

Equations and Parameter Values
EPA Human Health Risk Assessment Protocol

(HHRAP – EPA520-R-05-006)
Source: http://www.epa.gov/epaoswer/hazwaste/combust/risk.htm

Appendix B

Equations and Parameter Values
EPA Human Health Risk Assessment Protocol

(HHRAP – EPA520-R-05-006
Source: http:www.epa.gov/epaoswer/haswaste/combust/risk.htm

B-1. Media Concentration Equations – HHRAP Appendix B (See Section B-3 for parameter definitions and units.)

Cumulative soil concentration (Cs) for carcinogens:

For T_2<tD (child, farmer child scenarios):

$$Cs = \frac{Ds}{ks \cdot (tD - T_1)} \cdot \left[\left(tD + \frac{\exp(-ks \cdot tD)}{ks} \right) - \left(T_1 + \frac{\exp(-ks \cdot T_1)}{ks} \right) \right] .$$

For T_1<tD<T_2 (adult, farmer scenarios):

$$Cs = \frac{\left(\frac{Ds \cdot tD - Cs_{tD}}{ks} \right) + \left(\frac{Cs_{tD}}{ks} \right) \cdot (1 - \exp[-ks \cdot (T_2 - tD)])}{T_2 - T_1} .$$

Cumulative soil concentration (Cs) for noncarcinogens:

$$Cs_{tD} = \frac{D_s \cdot (1 - \exp[-ks \cdot tD)])}{ks} .$$

Soil loss constant as recommended by EPA OSW:

$$ks = ksg + kse + ksr + ksl + ksv .$$

Soil loss constant resulting from erosion (conservatively assumed to be 0 at INL):

$$kse = \frac{0.1 \cdot X_e \cdot SD \cdot ER}{BD \cdot Z_s} \cdot \frac{Kd_s \cdot BD}{\theta_{sw} + (Kd_s \cdot BD)} .$$

Soil loss constant due to runoff (conservatively assumed to be 0 at INL):

$$ksr = \frac{RO}{\theta_{sw} \cdot Z_s} \cdot \left(\frac{1}{1 + (Kd_S \cdot BD / \theta_{sw})} \right) .$$

Leach rate constant:

$$ksl = \frac{P + I - RO - Ev}{\theta_{sw} \cdot Z_s \cdot [1.0 + (BD \cdot Kd_s / \theta_{sw})]} \quad .$$

Volatilization loss rate constant:

$$ksv = \left(\frac{3.1536 \times 10^7 \cdot H}{Z_s \cdot Kd_s \cdot R \cdot T_a \cdot BD} \right) \cdot \left(\frac{D_a}{Z_s} \right) \cdot \left[1 - \left(\frac{BD}{\rho_{soil}} \right) - \theta_{sw} \right] \quad .$$

Deposition Term (HHRAP Draft equation – used for ISC-PRIME runs):

$$Ds = \left[\frac{100 \cdot Q}{Z_s \cdot BD} \right] \cdot \left[F_v \cdot (0.31536 \cdot Vdv \cdot Cyv + Dywv) + (Dydp + Dywp) \cdot (1 - F_v) \right] \quad .$$

Deposition Term (2005 HHRAP equation):

$$Ds = \left[\frac{100 \cdot Q}{Z_s \cdot BD} \right] \cdot \left[F_v \cdot (Dydv + Dywv) + (Dydp + Dywp) \cdot (1 - F_v) \right] \quad .$$

Mercury Deposition Term (2005 HHRAP equation):

$$Ds = \left[\frac{100 \cdot (0.48\ Q_{total})}{Z_s \cdot BD} \right] \cdot \left[F_v \cdot (Dydv + Dywv) + (Dydp + Dywp) \cdot (1 - F_v) \right] \quad .$$

Recommended values for Soil Mixing Depth (Z_s):

1cm – untilled

20cm – tilled.

Recommended values for Soil Dry Bulk Density (BD):

1.50 g/cm^3.

Recommended value for soil volumetric water content:

0.2 mL/cm^3.

Aboveground produce concentration due to direct deposition:

$$Pd = \frac{1000 \cdot Q \cdot (1 - F_v) \cdot [Dydp + (Fw \cdot Dywp)] \cdot Rp \cdot [1.0 - \exp(-kp \cdot Tp)]}{Yp \cdot kp} \quad .$$

Recommended value for interception fraction of the edible portion of plant (Rp):

0.39.

Calculating the measure of the amount of contaminant that is lost to physical processes over time:

$$kp = \left(\frac{\ln 2}{t_{1/2}}\right) \cdot 365 \quad .$$

Recommended value for plant surface loss coefficient (kp):

18.

Length of plant exposure to deposition per harvest of the edible portion of plant:

$$Tp = \frac{60 days}{365 days / yr} = 0.164 \ yr \quad .$$

Standing crop biomass (productivity):

$$Yp = \frac{Yh_i}{Ah_i} \quad .$$

Recommended values for standing crop biomass (productivity)(Yp):

Crops = 2.24 kg DW/m^2

Forage = 0.24 kg DW/m^2

Silage = 0.8 kg DW/m^2.

Aboveground produce concentration due to air-to-plant transfer:

$$Pv = Q \cdot F_v \cdot \frac{Cyv \cdot Bv_{ag} \cdot VG_{ag}}{\rho_a} \quad .$$

Correction factor for below ground produce:

$$VG_{rootveg} = \frac{M_{skin}}{M_{veg}} \quad .$$

Recommended values for Empirical Correction Factor for aboveground produce (VG_{ag}):

0.01 for COPCs with a log K_{ow} greater than 4

1.0 for COPCs with a log K_{ow} less than 4.

Produce concentration due to root uptake:

Exposed and protected aboveground produce:

$$Pr_{ag} = Cs \cdot Br \quad .$$

Belowground produce:

$$Pr_{bg} = \frac{Cs \cdot RCF \cdot VG_{rootveg}}{Kd_s \cdot 1\,kg/L} \quad .$$

Recommended values for empirical correction factor for belowground produce ($VG_{rootveg}$):

0.001 for COPCs with a log K_{ow} greater than 4

1.0 for COPCs with a log K_{ow} less than 4.

Recommended value for interception fraction of the edible portion of plant (Rp):

Forage = 0.5

Silage = 0.46.

Length of plant exposure to deposition per harvest of the edible portion of plant (Tp):

Considers the average of:

1. Average period between successive hay harvests
2. Average period between successive grazing.

$$Tp = \frac{0.5 \cdot (60\ \text{days} + 30\ \text{days})}{365\ \text{days}/\text{yr}} = 0.12\ \text{yr} \quad .$$

Recommended value for plant exposure length to deposition per harvest of the edible portion of plant (Tp):

Forage = 0.12 yr

Silage = 0.16 yr.

Recommended values for empirical correction factor for forage and silage (VG_{ag}):

Forage = 1

Silage = 0.5.

COPC Concentration in beef:

$$A_{beef} = (\Sigma\ (F_i \cdot Qp_i \cdot P_i) + Qs \cdot Cs \cdot Bs) \cdot Ba_{beef} \cdot MF \quad .$$

Recommended value for fraction of plant type *i* grown on contaminated soil and eaten by the animal (cattle) (F_i) = 1.

Recommended values for quantity of plant type *i* eaten by the animal (cattle) each day (Qp_i):

Forage = 8.8 kg DW/day
Silage = 2.5 kg DW/day
Grain = 0.47 kg DW/day.

COPC concentration in plant type *i* eaten by the animal (cattle):

$$P_i = (Pd + Pv + Pr) \quad .$$

Recommended value for quantity of soil ingested by the animal (cattle) per day (Qs):

0.5 kg/day.

Recommended values for soil bioavailability factor (Bs):

1.0.

COPC concentration in milk:

$$A_{milk} = (\Sigma \ (F_i \cdot Qp_i \cdot P_i) + Qs \cdot Cs \cdot Bs) \cdot Ba_{milk} \cdot MF \quad .$$

Recommended values for quantity of plant type *i* eaten by the animal (dairy cattle) per day (Qp_i):

Forage = 13.2 kg DW/day
Silage = 4.1 kg DW/day
Grain = 3.0 kg DW/day.

Recommended values for quantity of soil eaten by the animal (dairy cattle) per day (Qs):

0.4 kg/day.

COPC concentration in pork:

$$A_{pork} = (\Sigma \ (F_i \cdot Qp_i \cdot P_i) + Qs \cdot Cs \cdot Bs) \cdot Ba_{pork} \cdot MF \quad .$$

Recommended values for quantity of plant type *i* eaten by the animal (swine) each day (Qp_i):

Grain = 3.3 kg DW/day
Silage = 1.4 kg DW/day.

Recommended value for quantity of soil eaten by the animal (swine) each day (Qs):

0.37 kg DW/day.

COPC concentration in chicken and eggs:

$$A_{chicken} \text{ or } A_{egg} = (\Sigma\ [F_i \cdot Qp_i \cdot Pi] + Qs \cdot Cs \cdot Bs) \cdot (Ba_{egg} \text{ or } Ba_{chicken}) \ .$$

Recommended value for quantity of plant type *i* eaten by the animal (chicken) each day (Qp_i):

Grain = 0.2 kg DW/day.

Recommended equation for calculating concentration of COPC in plant type *i* eaten by the animal (chicken):

$$Pi = \Sigma_i(Pr) \ .$$

Recommended value for quantity of soil eaten by the animal (chicken) each day (Qs):

0.022 kg DW/day.

Air Concentration (Direct Inhalation Equation):

$$C_a = Q \cdot [F_v \cdot Cyv + (1.0 - F_v) \cdot Cyp]$$

$$Hg^0: \quad C_a = 0.002 \cdot Q[Fv \cdot Cyv + (1.0 - Fv) \cdot Cyp]$$

$$Hg^{2+}: \quad C_a = 0.48 \cdot Q[Fv \cdot Cyv + (1.0 - Fv) \cdot Cyp] \ .$$

B-2. Intake and Risk Characterization Equations – HHRAP Appendix C

COPC intake from soil:

$$I_{soil} = \frac{Cs \cdot CR \cdot F_{soil}}{BW} \ .$$

COPC intake from produce:

$$I_{ag} = \left[\left((Pd + Pv + Pr) \cdot CR_{ag}\right) + \left(Pr \cdot CR_{pp}\right) + \left(Pr_{bg} \cdot Cr_{bg}\right)\right] \cdot F_{ag} \ .$$

COPC intake from beef, milk, pork, poultry, and eggs:

$$I_i = A_i \cdot CR_i \cdot F_i \quad .$$

Total daily intake:

$$I_T = I_{soil} + I_{ag} + I_{beef} + I_{milk} + I_{pork} + I_{poultry} + I_{eggs} \quad .$$

Individual cancer risk: carcinogens:

$$CancerRisk_i = \frac{I_T \cdot ED \cdot EF \cdot CSF}{AT \cdot 365} \quad .$$

Hazard Quotient: noncarcinogens:

$$HQ = \frac{I_T \cdot ED \cdot EF}{RfD \cdot AT \cdot 365} \quad .$$

Total cancer risk: carcinogens:

$$\text{Total Cancer Risk} = \sum_i \cdot \text{Cancer Risk}_i \quad .$$

Total Hazard Index: noncarcinogens:

$$\text{Total Hazard Index} = \sum_j \cdot HI_j \quad .$$

Inhalation cancer risk for individual chemicals: carcinogens:

$$\text{Cancer Risk}_{inh(i)} = EC \cdot URF_{(i)}$$

$$EC = \frac{C_a \cdot EF \cdot ED}{AT \cdot 365 \text{ days / yr}} \quad .$$

Inhalation hazard quotient for COPCs: noncarcinogens:

$$HQ_{inh(i)} = \frac{EC \cdot 0.001}{RfC} \quad .$$

Total inhalation cancer risk: carcinogens:

$$\text{Total Cancer Risk}_{inh} = \sum_i \text{Cancer Risk}_{inh(i)} \quad .$$

Total hazard index for inhalation: noncarcinogens:

$$HI_{inh} = \sum_i HQ_i \quad .$$

Acute hazard quotient:

$$AHQ_{inh(i)} = \frac{C_{acute} \cdot 0.001}{AIEC} \quad .$$

B-3. HHRAP Equation Parameter Definitions and Units

A_{beef}	=	Concentration of COPC in beef (mg COPC/kg FW tissue)
$A_{chicken}$	=	Concentration of COPC in chicken (mg COPC/kg FW tissue)
A_{egg}	=	Concentration of COPC in egg (mg COPC/kg FW tissue)
A_{milk}	=	Concentration of COPC in milk (mg COPC/kg milk)
A_{pork}	=	Concentration of COPC in pork (mg COPC/kg FW tissue)
A_j	=	Concentration of COPC in animal tissue j
AHQ	=	Acute hazard quotient (unitless)
AIEC	=	Acute inhalation exposure criteria (mg/m^3)
AT	=	Averaging time (yr)
Ba_{beef}	=	COPC biotransfer factor for beef (day/kg FW tissue)
$Ba_{chicken}$	=	COPC biotransfer factor for chicken (day/kg FW tissue)
Ba_{egg}	=	COPC biotransfer factor for egg (day/kg FW tissue)
Ba_{milk}	=	COPC biotransfer factor for milk (day/kg FW tissue)
Ba_{pork}	=	COPC biotransfer factor for pork (day/kg FW tissue)
BD	=	Soil bulk density (g soil/cm^3 soil)
Br	=	Plant-soil bioconcentration factor for produce (unitless)
Bs	=	Soil bioavailability factor (unitless)
Bv_{ag}	=	COPC air-to-plant biotransfer factor ([mg COPC/g DW plant]/[mg COPC/g air])(unitless)
BW	=	Body Weight (kg)
CR_{ag}, CR_{pp}, CR_{bg}	=	Consumption rate of aboveground, protected aboveground, and belowground produce respectively (kg/kg-day DW)
CR_{soil}	=	Consumption rate of soil (kg/day)
Cs	=	Average soil concentration over exposure duration (mg COPC/kg soil)
CS_{TD}	=	Soil concentration at time tD (mg/kg)
CSF	=	Oral Cancer Slope Factor $(mg/kg\text{-}day)^{-1}$
Cyp	=	Unitized yearly average air concentration from particle phase (mg-s/g-m^3)
Cyv	=	Unitized yearly average air concentration from vapor phase (mg-s/g-m^3)

Ds	=	Deposition term (mg COPC/kg soil/yr)
Dydp	=	Unitized yearly dry deposition from particle phase (s/m^2-yr)
Dydv	=	Unitized yearly dry deposition from vapor phase (s/ m^2-yr)
Dywp	=	Unitized yearly average wet deposition from particle phase (s/m^2-yr)
Dywv	=	Unitized yearly wet deposition from vapor phase (s/ m^2-yr)
EC	=	Exposure concentration (μg/m^3)
ED	=	Exposure duration (yr)
EF	=	Exposure frequency (days/yr)
ER	=	Soil enrichment ration (unitless)
E_v	=	Average annual evapotranspiration (cm/yr)
F_{ag}	=	Fraction of produce that is contaminated (unitless)
F_i	=	Fraction of plant type i grown on contaminated soil and ingested by the animal (cattle)(unitless)
F_{soil}	=	Fraction of soil that is contaminated (unitless)
F_v	=	Fraction of COPC air concentration in vapor phase (unitless)
H	=	Henry's Law constant (atm-m^3/mol)
I	=	Average annual irrigation (cm/yr)
I_{ag}	=	Daily intake of COPC from produce (mg/kg-day DW)
I_{beef}, I_{milk}, I_{pork}, $I_{poultry}$, I_{eggs}	=	Daily intake of COPC from beef, milk, pork, poultry, and eggs (mg/kg-day FW)
I_i	=	Daily intake of COPC i from animal tissue j (mg/kg-day)
I_T	=	Total daily intake of COPC from all food sources (mg/kg-day)
I_{soil}	=	Daily intake of COPC from soil (mg/kg-day)
IR	=	Inhalation rate (m^3/hr)
Kds	=	Soil-water partition coefficient (mL water/g soil)
kp	=	Plant surface loss coefficient (yr^{-1})
ks	=	COPC soil loss constant due to all processes (yr^{-1})
kse	=	COPC loss constant due to soil erosion (yr^{-1})
ksg	=	COPC loss constant due to biotic and abiotic degradation (yr^{-1})
ksl	=	COPC loss constant due to leaching (yr^{-1})
ksr	=	COPC loss constant due to surface runoff (yr^{-1})
ksv	=	COPC loss constant due to volatilization (yr^{-1})

MF	=	Metabolism factor (unitless)
M_{skin}	=	Mass of thin (skin) layer of belowground vegetable (g)
M_{veg}	=	Mass of the entire vegetable (g)
P	=	Average annual precipitation (cm/yr)
P_i	=	Concentration of COPC in each plant type i eaten by the animal (cattle) (mg/kg DW)
Pd	=	Plant (aboveground produce) concentration due to direct (wet and dry) deposition (mg COPC/kg DW)
Pr_{ag}	=	Concentration in exposed or protected produce due to root uptake (mg/kg)
Pr_{bg}	=	Concentration in below-ground produce due to root uptake (mg/kg)
Pv	=	Concentration of COPC in the plant resulting from air-to-plant transfer (µg COPC/g DW)
Q	=	COPC emission rate (g/s)
Qp_i	=	Quantity of plant type i eaten by the animal (cattle) per day (kg DW plant/day)
Qs	=	Quantity of soil eaten by the animal (cattle) each day (kg/day)
R	=	Universal gas constant (atm-m^3/mol-K)
RCF	=	Root concentration factor (unitless)
RfC	=	Reference concentration (mg/kg-day)
RfD	=	Reference dose (mg/kg-day)
RO	=	Average annual surface runoff from previous areas (cm/yr)
Rp	=	Interception fraction of the edible portion of plant (unitless)
SD	=	Sediment delivery ratio (unitless) (g/m^2-yr)
tD	=	Time period over which deposition occurs (assumed 15 yr of operations)
Tp	=	Length of plant exposure to deposition per harvest of the edible portion of the ith plant group (yr)
T_a	=	Ambient air temperature (K) = 278.8 K (42 °F annual-average at INL)
$T_{1/2}$	=	Half-life (days)
T_1	=	Time period at the beginning of combustion (0 yr)
T_2	=	Length of exposure (6, 30, 40 yr for child, adult, farmer, respectively)
URF	=	Inhalation Unit Risk Factor $(\mu g/m^3)^{-1}$
Vdv	=	Dry deposition velocity (cm/s)
VG_{ag}	=	Empirical correction factor for aboveground produce (unitless)
$VG_{rootveg}$	=	Correction factor for belowground produce (g/g)

W	=	Average annual wind speed (m/s)
X_e	=	Unit soil loss (kg/m^2-yr)
Yh_i	=	Harvest yield of the ith crop (kg DW)
Yp	=	Yield or standing crop biomass of the edible portion of the plant (productivity)(kg DW/m^2)
Yp_i	=	Yield or standing crop biomass of edible portion of the ith plant group (kg DW/m^2)
Z_s	=	Soil mixing zone depth (cm)
ρ_a	=	Density of air (g/cm^3)
ρ_s	=	Density of surface soil (g/cm^3)
θsw	=	Soil volumetric water content (mL water/cm^3 soil)

B-4. HHRAP Equation Parameter Values (LET&D, PEWE, IWTU COPCs)

All values from U.S. EPA on-line Companion Data Base, January 2007
(ND = no value in EPA data base)

Table B-1. COPC physical/chemical parameter values used in the risk assessment.

COPC	CAS #	*Log Kow*	*Kds* (mL/g)	*ksg* (year)-1	*Fv* (unitless)
ALUMINUM	7429-90-5	ND	1.50E+03	0.00E+00	0.00E+00
ARSENIC	7440-38-2	6.80E-01	2.90E+01	0.00E+00	6.00E-03
BARIUM	7440-36-3	2.30E-01	4.10E+01	0.00E+00	9.00E-03
BENZO(A)PYRENE	50-32-8	6.00E+00	1.60E+05	4.80E-01	2.94E-01
BERYLLIUM	7440-41-7	-5.70E-01	7.90E+02	0.00E+00	9.00E-03
BIS(2-ETHYLHEXYL PHTHALATE)	117-81-7	5.10E+00	2.30E+06	1.10E+01	1.31E-01
CADMIUM	7440-43-9	-7.00E-02	7.50E+01	0.00E+00	9.00E-03
CHLORINE	7782-50-5	8.50E-01	ND	0.00E+00	1.00E+00
CHROMIUM	7440-47-3	2.30E-01	1.90E+01	0.00E+00	9.00E-03
DICHLOROBENZENE,1,4-	106-46-7	3.50E+00	1.20E+00	1.41E+00	1.00E+00
DICHLOROBENZIDINE,3,3'-	91-94-1	3.51E+00	7.21E+00	1.41E+00	4.82E-01
FLUORANTHENE	206-44-0	5.00E+00	1.10E+04	5.70E-01	9.92E-01
HEXACHLOROCYCLOPENTADIENE	77-47-4	5.04E+00	1.17E+02	9.03E+00	1.00E+00
HEXAVALENT CHROMIUM	18540-29-9	0.00E+00	1.90E+01	0.00E+00	0.00E+00
HYDROGEN CHLORIDE	7647-01-0	ND	ND	0.00E+00	1.00E+00
LEAD	7439-92-1	7.30E-01	9.00E+02	0.00E+00	7.00E-03
MERCURIC CHLORIDE	7487-94-7	-2.15E-01	5.80E+04	0.00E+00	8.50E-01
MERCURY - TOTAL	7439-97-6	6.20E-01	1.00E+03	0.00E+00	1.00E+00
METHYL MERCURY	22967-92-6	ND	7.00E+03	0.00E+00	0.00E+00
NICKEL	7440-02-0	-5.70E-01	6.50E+01	0.00E+00	9.00E-03
N-NITROSODIPROPYLAMINE	621-64-7	1.36E+00	2.20E-01	1.41E+00	1.00E+00
PYRENE	129-00-0	4.90E+00	9.50E+03	1.30E-01	9.94E-01
SELENIUM	7782-49-2	2.40E-01	5.00E+00	0.00E+00	0.00E+00
SILVER	7440-22-4	2.30E-01	8.30E+00	0.00E+00	9.00E-03
TRICHLOROPROPANE,1,2,3-	96-18-4	2.00E+00	1.40E-01	7.00E-01	1.00E+00
ZINC	7440-66-6	-4.70E-01	6.20E+01	0.00E+00	8.00E-03

Table B-1. (continued).

COPC	*MW* (g/mole)	*Vp* (atm)	*S* (mg/L)	*H* (atm m³ /mol)	*Da* (cm²/s)
ALUMINUM	2.70E+01	0.00E+00	0.00E+00	0.00E+00	2.11E-01
ARSENIC	7.80E+01	3.30E-12	3.47E+04	7.70E-01	7.72E-02
BARIUM	1.39E+02	5.58E-12	5.48E+04	0.00E+00	7.72E-02
BENZO(A)PYRENE	2.52E+02	7.24E-12	1.60E-03	1.10E-06	4.30E-02
BERYLLIUM	9.01E+00	5.58E-12	1.49E+05	1.50E-02	7.72E-02
BIS(2-ETHYLHEXYL PHTHALATE)	3.91E+02	8.95E-11	3.40E-01	1.00E-07	3.51E-02
CADMIUM	1.12E+02	5.45E-12	1.23E+05	3.10E-02	7.72E-02
CHLORINE	7.09E+01	7.70E+00	6.30E+03	1.17E-02	1.00E-03
CHROMIUM	5.20E+01	5.58E-12	8.67E+04	0.00E+00	1.27E-01
DICHLOROBENZENE,1,4-	1.47E+02	1.32E-03	7.90E+01	2.40E-03	6.90E-02
DICHLOROBENZIDINE,3,3'-	2.53E+02	4.88E-11	3.10E+00	4.00E-09	1.00E-03
FLUORANTHENE	2.02E+02	1.03E-08	2.10E-01	1.60E-05	1.00E-03
HEXACHLOROCYCLOPENTADIENE	2.73E+02	7.89E-05	1.80E+00	2.70E-02	1.00E-03
HEXAVALENT CHROMIUM	5.20E+01	0.00E+00	0.00E+00	0.00E+00	0.00E+00
HYDROGEN CHLORIDE	3.65E+01	4.66E+01	7.20E+05	2.36E-03	1.00E-03
LEAD	2.09E+02	3.97E-12	9.58E+03	2.50E-02	7.72E-02
MERCURIC CHLORIDE	2.72E+02	1.20E-04	6.90E+04	7.10E-10	4.53E-02
MERCURY - TOTAL	2.01E+02	2.63E-06	6.00E-02	7.10E-03	1.09E-02
METHYL MERCURY	2.16E+02	ND	0.00E+00	4.70E-07	5.28E-02
NICKEL	5.87E+01	5.58E-12	4.22E+05	2.50E-02	7.72E-02
N-NITROSODIPROPYLAMINE	1.30E+02	1.71E-04	9.89E+03	2.25E-06	1.00E-03
PYRENE	2.02E+02	6.05E-09	1.40E+00	1.10E-05	1.00E-03
SELENIUM	7.90E+01	1.87E-13	2.06E+03	9.70E-03	7.72E-02
SILVER	1.08E+02	5.58E-12	7.05E+04	0.00E+00	7.72E-02
TRICHLOROPROPANE,1,2,3-	1.47E+02	4.87E-03	1.80E+03	4.10E-04	7.10E-02
ZINC	6.54E+01	5.09E-12	3.44E+05	2.50E-02	7.72E-02

Table B-2. COPC plant bio-transfer factor parameter values used in the risk assessment.

COPC	*Fv* (unitless)	*RCF (mL/g)*	*Brroot* (unitless)	*Brag* (unitless)	*Brf/s* (unitless)	*Brgrain* (unitless)	*Bvag* (unitless)
ALUMINUM	0.00E+00	ND	ND	ND	ND	ND	ND
ARSENIC	6.00E-03	ND	8.00E-03	6.33E-03	3.60E-02	4.00E-03	ND
BARIUM	9.00E-03	ND	1.50E-02	3.22E-02	1.50E-01	1.50E-02	ND
BENZO(A)PYRENE	2.94E-01	9.68E+03	6.05E-02	1.32E-02	1.32E-02	1.32E-02	1.25E+05
BERYLLIUM	9.00E-03	ND	1.50E-03	2.58E-03	1.00E-02	1.50E-03	ND
BIS(2-ETHYLHEXYL PHTHALATE)	1.31E-01	1.96E+03	8.54E-04	4.37E-02	4.37E-02	4.37E-02	1.51E+05
CADMIUM	9.00E-03	ND	6.40E-02	1.25E-01	3.64E-01	6.20E-02	ND
CHLORINE	1.00E+00	7.36E+00	ND	8.38E+00	8.38E+00	8.38E+00	ND
CHROMIUM	9.00E-03	ND	4.50E-03	4.88E-03	7.50E-03	4.50E-03	ND
DICHLOROBENZENE,1,4-	1.00E+00	1.15E+02	9.59E+01	3.67E-01	3.67E-01	3.67E-01	1.24E-01
DICHLOROBENZIDINE,3,3'-	4.82E-01	1.17E+02	1.62E+01	3.62E-01	3.62E-01	3.62E-01	7.65E+04
FLUORANTHENE	9.92E-01	1.64E+03	1.50E-01	4.99E-02	4.99E-02	4.99E-02	7.38E+02
HEXACHLOROCYCLOPENTADIENE	1.00E+00	1.77E+03	1.50E+01	4.73E-02	4.73E-02	4.73E-02	4.83E-01
HEXAVALENT CHROMIUM	0.00E+00	ND	4.50E-03	4.88E-03	7.50E-03	4.50E-03	ND
HYDROGEN CHLORIDE	1.00E+00	ND	ND	ND	ND	ND	ND
LEAD	7.00E-03	ND	9.00E-03	1.36E-02	4.50E-02	9.00E-03	ND
MERCURIC CHLORIDE	8.50E-01	ND	3.60E-02	1.45E-02	0.00E+00	9.30E-03	1.80E+03
MERCURY - TOTAL	1.00E+00	ND	ND	ND	ND	ND	0.00E+00
METHYL MERCURY	0.00E+00	ND	9.90E-02	2.94E-02	0.00E+00	1.90E-02	0.00E+00
NICKEL	9.00E-03	ND	8.00E-03	9.31E-03	3.20E-02	6.00E-03	ND
N-NITROSODIPROPYLAMINE	1.00E+00	8.90E+00	4.09E+01	6.34E+00	6.34E+00	6.34E+00	6.98E-01
PYRENE	9.94E-01	1.38E+03	1.45E-01	5.70E-02	5.70E-02	5.70E-02	8.40E+02
SELENIUM	0.00E+00	ND	2.20E-02	1.95E-02	1.60E-02	2.00E-03	ND
SILVER	9.00E-03	ND	1.00E-01	1.38E-01	4.00E-01	1.00E-01	ND
TRICHLOROPROPANE,1,2,3-	1.00E+00	8.05E+00	5.75E+01	2.70E+00	2.70E+00	2.70E+00	1.84E-02
ZINC	8.00E-03	ND	9.00E-01	9.70E-02	2.50E-01	5.40E-02	ND

Table B-3. Animal bio-transfer factor parameter values used in the risk assessment.

COPC	CAS #	*Bamilk* (day/kg FW)	*Babeef* (day/kg FW)	*Bapork* (day/kg FW)	*Baeggs* (day/kg FW)	*Bapoult* (day/kg FW)
ALUMINUM	7429-90-5	ND	ND	ND	ND	ND
ARSENIC	7440-38-2	6.00E-05	2.00E-03	ND	ND	ND
BARIUM	7440-36-3	3.50E-04	1.50E-04	ND	ND	ND
BENZO(A)PYRENE	50-32-8	7.91E-03	3.76E-02	4.55E-02	1.58E-02	2.77E-02
BERYLLIUM	7440-41-7	9.00E-07	1.00E-03	ND	ND	ND
BIS(2-ETHYLHEXYL PHTHALATE)	117-81-7	8.40E-03	3.99E-02	4.83E-02	1.68E-02	2.94E-02
CADMIUM	7440-43-9	6.50E-06	1.20E-04	1.91E-04	2.50E-03	1.06E-01
CHLORINE	7782-50-5	7.59E-05	3.60E-04	4.36E-04	1.52E-04	2.66E-04
CHROMIUM	7440-47-3	1.50E-03	5.50E-03	ND	ND	ND
DICHLOROBENZENE,1,4-	106-46-7	3.75E-03	1.78E-02	2.16E-02	7.50E-03	1.31E-02
DICHLOROBENZIDINE,3,3'-	91-94-1	3.79E-03	1.80E-02	2.18E-02	7.57E-03	1.32E-02
FLUORANTHENE	206-44-0	8.26E-03	3.92E-02	4.75E-02	1.65E-02	2.89E-02
HEXACHLOROCYCLOPENTADIENE	77-47-4	8.32E-03	3.95E-02	4.78E-02	1.66E-02	2.91E-02
HEXAVALENT CHROMIUM	18540-29-9	1.50E-03	5.50E-03	ND	ND	ND
HYDROGEN CHLORIDE	7647-01-0	1.10E-05	5.23E-05	6.33E-05	2.20E-05	3.86E-05
LEAD	7439-92-1	2.50E-04	3.00E-04	ND	ND	ND
MERCURIC CHLORIDE	7487-94-7	2.26E-03	5.22E-03	3.39E-05	2.39E-02	2.39E-02
MERCURY - TOTAL	7439-97-6	0.00E+00	0.00E+00	0.00E+00	0.00E+00	0.00E+00
METHYL MERCURY	22967-92-6	3.38E-04	7.80E-04	5.07E-06	3.58E-03	3.58E-03
NICKEL	7440-02-0	1.00E-03	6.00E-03	ND	ND	ND
N-NITROSODIPROPYLAMINE	621-64-7	2.06E-04	9.79E-04	1.19E-03	4.12E-04	7.21E-04
PYRENE	129-00-0	8.09E-03	3.84E-02	4.65E-02	1.62E-02	2.83E-02
SELENIUM	7782-49-2	5.86E-03	2.27E-03	1.88E-01	1.13E+00	1.13E+00
SILVER	7440-22-4	2.00E-02	3.00E-03	ND	ND	ND
TRICHLOROPROPANE,1,2,3-	96-18-4	6.11E-04	2.90E-03	3.51E-03	1.22E-03	2.14E-03
ZINC	7440-66-6	3.25E-05	9.00E-05	1.28E-04	8.75E-03	8.75E-03

Table B-4. COPC health benchmarks used in the risk assessment.

COPC	CAS #	*RfD* (mg/kg/d)	CSF (mg/kg-day)$^{-1}$	*RfC* (mg/m³)	*URF* (µg/m³)$^{-1}$	AIEC (mg/m3)
ALUMINUM	7429-90-5	ND	ND	5.00E-03	ND	ND
ARSENIC	7440-38-2	3.00E-04	1.50E+00	3.00E-05	4.30E-03	1.90E-04
BARIUM	7440-36-3	7.00E-02	ND	5.00E-04	ND	1.50E+00
BENZO(A)PYRENE	50-32-8	ND	7.30E+00	ND	1.10E-03	6.00E-01
BERYLLIUM	7440-41-7	2.00E-03	ND	2.00E-05	2.40E-03	5.00E-03
BIS(2-ETHYLHEXYL PHTHALATE)	117-81-7	2.00E-02	1.40E-02	ND	ND	1.00E+01
CADMIUM	7440-43-9	1.00E-03	3.80E-01	2.00E-04	1.80E-03	3.00E-02
CHLORINE	7782-50-5	1.00E-01	ND	2.00E-04	ND	2.10E-01
CHROMIUM	7440-47-3	1.50E+00	ND	5.30E+00	ND	1.50E+00
DICHLOROBENZENE,1,4-	106-46-7	3.00E-02	5.40E-03	8.00E-01	1.10E-05	6.00E+02
DICHLOROBENZIDINE,3,3'-	91-94-1	ND	4.50E-01	ND	3.40E-04	6.00E+00
FLUORANTHENE	206-44-0	4.00E-02	ND	1.40E-01	ND	1.50E-02
HEXACHLOROCYCLOPENTADIENE	77-47-4	6.00E-03	ND	2.00E-04	ND	2.00E-01
HEXAVALENT CHROMIUM	18540-29-9	3.00E-03	ND	8.00E-06	1.20E-02	ND
HYDROGEN CHLORIDE	7647-01-0	5.71E-03	ND	2.00E-02	ND	2.10E+00
LEAD	7439-92-1	4.29E-04	8.50E-03	1.50E-03	1.20E-05	1.50E-01
MERCURIC CHLORIDE	7487-94-7	3.00E-04	ND	1.10E-03	ND	1.25E-01
MERCURY - TOTAL	7439-97-6	8.57E-05	ND	3.00E-04	ND	1.80E-03
METHYL MERCURY	22967-92-6	1.00E-04	ND	3.50E-04	ND	3.00E-02
NICKEL	7440-02-0	2.00E-02	ND	2.00E-04	2.40E-04	6.00E-03
N-NITROSODIPROPYLAMINE	621-64-7	ND	7.00E+00	ND	2.00E-03	2.00E-01
PYRENE	129-00-0	3.00E-02	ND	1.10E-01	ND	1.50E+01
SELENIUM	7782-49-2	5.00E-03	ND	2.00E-02	ND	1.47E+00
SILVER	7440-22-4	5.00E-03	ND	1.80E-02	ND	3.00E-01
TRICHLOROPROPANE,1,2,3-	96-18-4	6.00E-03	7.00E+00	ND	2.00E-03	6.00E+01
ZINC	7440-66-6	3.00E-01	ND	ND	ND	3.00E+01