Environmental Consultants
and Contractors

2405 140th Avenue, NE
Suite 107
Bellevue, WA 98005-1877

425 746-4600
FAX 425 746-6747
www.scsengineers.com

SCS ENGINEERS

RECEIVED
JAN 04 2011
DEQ-TFRO

November 19, 2010
File No. 04209002.00

Mr. Bill Rogers
Department of Environmental Quality
Air Quality Division
Stationary Source Program
1410 North Hilton
Boise, Idaho 83706-1255

Subject: Initial Tier I Operating Permit and Permit to Construct Application for the Milner Butte Landfill and Landfill Gas (LFG) Flare Station

Dear Mr. Rogers:

On behalf of the Southern Idaho Regional Solid Waste District, dba Southern Idaho Solid Waste (SISW), SCS Engineers (SCS) hereby submits this Initial Tier I Operating Permit and Permit to Construct Application for the Milner Butte Landfill (MBL) and LFG Flare Station at the MBL. This application is being submitted to the Idaho Department of Environmental Quality (Department) for review and approval on behalf of SISW.

This application submittal has been prepared in accordance with Idaho Administrative Procedures Act (IDAPA) 58.01.01.200, 58.01.01.300 and the Departments's Tier I Operating Permit Application Completeness Checklist.

PROCESS DESCRIPTION AND EQUIPMENT LIST

The MBL, owned and operated by SISW, is located in Burley, Idaho. The MBL is located in Western Cassia County approximately 13 miles west of the Burley, Idaho, and 25 miles east of Twin Falls, Idaho. The site lies near the East slope of Milner Butte and occupies 640 acres.

The site began accepting waste in 1994 and currently consists of four existing contiguous solid waste disposal units (cells) occupying approximately 58 acres. The landfill has a current overall permitted capacity of 140 acres and accepts mixed municipal solid waste from seven counties in southern Idaho.

Based upon an estimated annual increase of 1.5 percent in waste acceptance rates for the landfill for year 2011 and onward, and the total maximum permitted waste capacity of the landfill (19,400,000 cubic yards), SCS estimates that the final maximum permitted capacity will be reached by 2060. This information has been used by SCS during LFG generation modeling for the landfill. However, the actual maximum capacity will be reached depending on actual refuse acceptance rates and not based on estimated annual increases.

RECEIVED
JAN 14 2011
Department of Environmental Quality
State Air Program

CELEBRATING 40 YEARS SCS ENGINEERS

Scanned

The existing Gas Collection and Control System (GCCS) was constructed during 2009 and is currently being evaluated for system performance and well coverage. To increase coverage, five (5) vertical extraction wells were installed in May 2010 and connected to the system on June 5, 2010. The GCCS consists of a header piping network, vertical gas extraction wells, horizontal gas collectors, condensate collection, connections to the existing Leachate Collection and Recovery System (LCRS), and a blower/flare station.

The blower/flare station is equipped with two blowers and a single enclosed flare. A second blower is used in the event of a breakdown or subsequent maintenance to the primary blower. The blowers are manufactured by Houston Service Industries (HSI) and are rated at 30 horsepower (HP) each. The flare was manufactured by Perennial Energy and has a maximum rating of 1,500 standard cubic feet per minute (scfm). The flare is equipped with:

- Continuous temperature and flow recorder
- Flow meter
- UV flame scanner to monitor for flame failure
- Automated shut-off (isolation valve) to close off the gas supply to the flare and avoid venting to atmosphere
- Flame arrestor

A Process Flow Diagram is provided in Figure 1 and a Plot Plan is provided as Figure 2.

INSIGNIFICANT ACTIVITES BASED ON SIZE OR PRODUCTION RATE

The MBL utilizes the following equipment/processes which are considered insignificant activities based on size or production rate in accordance with IDAPA 58.01.01.317:

- Mobile transport tanks on vehicles – 58.01.01.317.01.a.2
- Brazing, soldering, and welding equipment – 58.01.01.317.01.a.12
- Portable electrical generators – 58.01.01.317.01.a.19
- Plastic pipe welding – 58.01.01.317.01.a.26
- Plant maintenance – 58.01.01.317.01.a.28
- Maintenance of paved streets – 58.01.01.317.01.a.30
- General vehicle maintenance – 58.01.01.317.01.a.40
- Comfort air conditioning or air cooling systems – 58.01.01.317.01.a.41
- Fire suppression systems – 58.01.01.317.01.a.46
- Repair and maintenance shop activities – 58.01.01.317.01.a.64
- Solid waste containers – 58.01.01.317.01.a.69
- Air compressors – 58.01.01.317.01.a.78
- Sludge dewatering and wet sludge handling – 58.01.01.317.01.a.100
- Diesel storage tanks – 58.01.01.317.01.b.3
- 350,000 BTU/hr Combustion source – 58.01.01.317.01.b.6

COMPLIANCE CERTIFICATION

This initial permit application contains the appropriate compliance certification information required by 58.01.01.315.09. The compliance certifications will be submitted annually in conjunction with the required second half semi-annual New Source Performance Standards (NSPS) reports. The compliance certification is provided as Attachment A.

COMPLIANCE PLAN

For each applicable requirement with which the emissions units are in compliance, the emissions units will continue to comply with the applicable requirements. For each applicable requirement that will become effective during the term of the Tier I operating permit that does not contain a more detailed schedule, the emissions units will meet the applicable requirement on a timely basis. For each applicable requirement that will become effective during the term of the Tier I operating permit that contains a more detailed schedule, the emissions units will comply with the applicable requirement on the schedule provided in the applicable requirement. For each applicable requirement with which the emissions unit is not in compliance (40 CFR 60.752(c)(1), IDAPA 58.01.01.201, IDAPA 58.01.01.301, IDAPA 58.01.01.312, IDAPA 58.01.01.313.01, and IDAPA 58.01.01.859.04.a), the emissions units will be in compliance with the applicable requirements upon issuance of a Title V/Tier I operating permit and a permit to construct.

The MBL is currently not in compliance with two of the above listed applicable requirements. These requirements pertain to obtaining a Title V/Tier I operating permit on a timely basis and a permit to construct for the LFG flare prior to installation and operation. As such, a compliance schedule according to IDAPA 58.01.01.314.10.b is required for this permit application. As stated above, the MBL will be in compliance with all applicable requirements upon issuance of the appropriate permits. An initial progress report will be submitted to the Department within six months from the date of this application, and if the permits are not issued within six months, an additional progress report will be submitted within one year from the date of this application.

PROPOSED EMISSIONS LIMITS

The proposed emissions limits in accordance with the emissions estimate are provided in Attachment B and a manufacturer's emission guarantee for the LFG flare is provided in Attachment C. Ambient concentrations for regulated air pollutants that exceeded the screening emission levels thresholds provided in 58.01.01.585 and 586 were not modeled. Because the toxic air pollutants from the source are regulated by the Department under 40 Code of Federal Regulation (CFR) Part 60, 40 CFR Part 61, and 40 CFR Part 63, 58.01.01.210.20.a states that no further procedures for demonstrating preconstruction compliance will be required under Section 210 for that toxic air pollutant as part of the application process.

RESTRICTIONS ON POTENTIAL TO EMIT

SISW is not proposing to implement any restrictions on the sites potential to emit (PTE) because the estimated PTE emissions are below major source levels and emissions do not exceed Prevention of Significant Deterioration (PSD) permitting levels.

FORMS AND REGULATION APPLICABILITY REVIEW

The Cover Sheet for Air Permit Application – Permit to Construction (CSPTC) form and additional forms required to be included under the CSPTC are provided as Attachment D to this application.

A list of all applicable air quality rules and regulations for both Federal and State regulations is included with Form FRA. Review consistent with the FRA Form guidance was performed for the State regulations and is provided after the Federal review section.

APPLICATION FEE

According to 58.01.01.224 a permit to construct application fee of $1,000 is being submitted with the original permit construction approval application package.

RESPONSIBLE OFFICIAL CERTIFICATION

Based on information and belief formed after reasonable inquiry, the statements and information contained within this Initial Tier I Operating Permit and Permit to Construct Application for the MBL and LFG Flare Station at the MBL are true, accurate, and complete.

_____ Date: _____
Dave Lore, Executive Director, SISW

Sincerely,

Eric M. Sonsthagen, P.E.
Project Engineer
SCS ENGINEERS

Patrick S. Sullivan, R.E.A., C.P.P.
Senior Vice President
SCS ENGINEERS

ES/ps

cc: John Richards, SCS

Attachments: A – Compliance Certification
B – Emissions Estimate
C – Flare Manufacturer's Emission Guarantee
D – Forms and Regulation Applicability Review
Figure 1 – Process Flow Diagram
Figure 2 – Plot Plan

Enclosures: CD – Application Files

Attachment A
Initial Compliance Certification
Initial Tier I Permit Application

Permit#: N/A
Site name: Milner Butte Landfill
Address: 1050 West 400 South
City: Burley
State: ID
Zip: 83318

Applicable Regulation	Requirement	Method of Determining Compliance	Affected Emission Units	Compliance (Y, N or NA)	Continuous or Intermittent Compliance (I or C)	Comments
40 CFR 60.752(b)(2)(i)	Submit a collection and control system design plan prepared by a professional engineer to the Administrator within 1 year.	Submittal of a collection and control system design plan.	01 - Landfill	Y	C	The Collection and Control System Design Plan was submitted on August 19, 2010.
40 CFR 60.752(b)(2)(ii)	Install a collection and control system that captures the gas generated within the landfill as required by paragraphs (b)(2)(ii)(A) or (B) and (b)(2)(iii) of this section within 30 months after the first annual report in which the emission rate equals or exceeds 50 megagrams per year.	Installation of a collection and control system within 30 months after the first annaul report in which the emission rate equals or exceeds 50 megagrams per year.	01 - Landfill	Y	C	The Milner Butte Landfill has installed a collection and control systmem before February 21, 2012.
40 CFR 60.752(b)(2)(ii)(A)	An active collection system shall be designed to handle the maximum expected gas flow rate from the entire area of the landfill that warrants control over the intended use period of the gas control or treatment system equipment. Collect gas from each area, cell or group of cells in the landfill in which the initial solid waste has been placed for a period of 5 years or more if active or 2 years or more if closed or at final grade. Collect gas at a sufficient extraction rate and be designed to minimize off-site migration of subsurface gas.	Install an active collection system able to handle the maximum expected gas flow rate from the entire area of the landfill that warrants control over the intended use period of the gas control or treatment system equipment, collect gas from each area, cell or group of cells in the landfill in which the initial solid waste has been placed for a period of 5 years or more if active or 2 years or more if closed or at final grade, and collect gas at a sufficient extraction rate to minimize off-site migration of subsurface gas.	01 - Landfill	Y	C	The Milner Butte Landfill has installed a collection and control systmem in accordance with 40 CFR 60.752(b)(2)(ii)(A).

Applicable Regulation	Requirement	Method of Determining Compliance	Affected Emission Units	Compliance (Y, N or NA)	Continuous or Intermittent Compliance (I or C)	Comments
40 CFR 60.752(b)(2)(iii)(B)	Route all the collected gas to a control system that is designed and operated to reduce NMOC by 98 weight-percent, or, when an enclosed combustion device is used for control, to either reduce NMOC by 98 weight percent or reduce the outlet NMOC concentration to less than 20 ppmv, dry basis as hexane at 3 percent oxygen. The reduction efficiency or ppmv shall be established by an initial performance test to be completed no later than 180 days after the initial startup of the approved control system using the test methods specified in Secion 60.754(d).	Perform an initial performance test no later than 180 days after the initial startup of the approved control system using the test methods specified in Secion 60.754(d).	02 - Landfill Gas Flare	Y	C	The Milner Butte Landfill will perform the initial performance test no later than 180 days after the initial startup of the approved control system using the test methods specified in Section 60.754(d).
40 CFR 60.752(b)(2)(iii)(B)(2)	The control device shall be operated within the parameter ranges established during the initial or most recent performance test.	Operated the control device within the parameter ranges established during the initial or most recent performance test.	02 - Landfill Gas Flare	Y	C	The Milner Butte Landfill will perform the initial performance test no later than 180 days after the initial startup of the approved control system using the test methods specified in Section 60.754(d).
40 CFR 60.752(b)(2)(iii)(C)(iv)	Operate the collection and control device installed to comply with this subpart in accordance with the provisions of Section 60.753, 60.755 and 60.756.	Operate the collection and control device installed to comply with this subpart in accordance with the provisions of Section 60.753, 60.755 and 60.756.	01 - Landfill 02 - Landfill Gas Flare	Y	C	The collection and control device installed complies with 40 CFR 60.753, 60.755 and 60.756.
40 CFR 60.752(b)(2)(iii)(C)(v)	The collection and control system may be capped or removed provided that the a closure report is submitted to the Administrator, the collection and control system has been in operation a minimum of 15 years, and the calculated NMOC gas produced by the landfill is less than 50 megagrams per year on three successive test dates.	Submit a closure report is to the Administrator after the collection and control system has been in operation a minimum of 15 years, and the calculated NMOC gas produced by the landfill is less than 50 megagrams per year on three successive test dates.	01 - Landfill 02 - Landfill Gas Flare	Y	C	The Milner Butte Landfill is not requesting to remove or cap the collection and control system at this time.

Applicable Regulation	Requirement	Method of Determining Compliance	Affected Emission Units	Compliance (Y, N or NA)	Continuous or Intermittent Compliance (I or C)	Comments
40 CFR 60.752(c)(1)	The owner or operator of a MSW landfill with a design capacity greater than or equal to 2.5 million megagrams or 2.5 million cubic meters, and not otherwise subject to either Part 70 or 71, should obtain an operating permit under Title V of the Clean Air Act once it becomes subject to the requirements of Section 70.5(a)(1)(i) or 71.5(A0(1)(i) by June 10, 1996.	Obtain an operating permit under Title V of the Clean Air Act by June 10, 1996.	01 - Landfill	N	I	The Milner Butte Landfill is currently submitting for an initial operating permit under Title V of the Clean Air Act.
40 CFR 60.753(a)	Operate the collection system such that the gas is collected from each area, cell, or group of cells in the MSW landfill in which solid waste has been in place for 5 years or more if active, or 2 years or more if closed or at final grade.	Install and operate the collection system in areas, cells, or groups of cells in which solid waste has been in place for 5 years or more if active, or 2 years or more if closed or at final grade.	01 - Landfill	Y	C	The Milner Butte Landfill has a collection system installed in areas, cells, or groups of cells in which solid waste has been in place for 5 years or more if active, or 2 years or more if closed or at final grade.
40 CFR 60.753(b)	Operate the collection system with negative pressure at each wellhead except under a fire or increased well temperature, use of a geomembrane or synthetic cover, or a decommissioned well.	Collection system monitoring records.	01 - Landfill	Y	C	The Milner Butte Landfill will operate the collection system in accordance with this condition after initial startup.
40 CFR 60.753(c)	Operate each interior wellhead in the collection system with a landfill gas temperature less than 55 °C and with either a nitrogen level less than 20 percent or an oxygen level less than 5 percent.	Collection system monitoring records.	01 - Landfill	Y	C	The Milner Butte Landfill will operate the collection system in accordance with this condition after initial startup and will monitor for oxygen levels.
40 CFR 60.753(d)	Operate the collection system so that the methane concentration is less than 500 ppm at the surface .	Quarterly Surface Emission Monitoring Reports.	01 - Landfill	Y	C	The Milner Butte Landfill will operate the collection system in accordance with this condition after initial startup.
40 CFR 60.753(e)	Operate the system such that all collected gases are vented to a control system designed and operated in compliance with Section 60.752(b)(2)(iii).	Operational records and monitoring records.	01 - Landfill	Y	C	The Milner Butte Landfill will operate the collection system in accordance with this condition after initial startup.
40 CFR 60.753(f)	Operate the control or treatment system at all times when the collected gas is routed to the system.	Operational records and monitoring records.	01 - Landfill	Y	C	The Milner Butte Landfill will operate the collection system in accordance with this condition after initial startup.

Applicable Regulation	Requirement	Method of Determining Compliance	Affected Emission Units	Compliance (Y, N or NA)	Continuous or Intermittent Compliance (I or C)	Comments
40 CFR 60.753(g)	If monitoring demonstrates the requirements of 40 CFR 60.753(b), (c), or (d) are not met, corrective action shall be taken according to 40 CFR 60.755. If corrective action are taken as specified, the exceedance is not a violation.	Operational records and monitoring records.	01 - Landfill	Y	C	
40 CFR 60.754(b)	After the installation of a collection and control system in compliance with Section 60.755, the owner or operator shall calculate the NMOC emission rate for purposes of determining when the system can be removed as provided in Section 60.752(b)(2)(v).	Calculation of the NMOC emission rate in accordance with 40 CFR 60.754(b).	01 - Landfill 02 - Landfill Gas Flare	Y	C	The Milner Butte Landfill is not requesting to remove or cap the collection and control system at this time.
40 CFR 60.754(d)	For the performance test required in Section 60.752(b)(2)(iii)(B), Method 25, 25C, or Method 18 of Appendix A must be used to determine compliance with the 98 weight percent efficiency or the 20 ppmv outlet concentration level. Method 3 or 3A shall be used to determine oxygen for correcting the NMOC concentration as hexane to 3 percent.	Source test records.	02 - Landfill Gas Flare	Y	C	The Milner Butte Landfill will perform the initial performance test no later than 180 days after the initial startup of the approved control system using the test methods specified in Section 60.754(d).
40 CFR 60.754(e)	For the performance test required in Section 60.752(b)(2)(iii)(B), the net heating value of the combusted landfill gas as determined in Section 60.18(f)(3) is calculated from the concentration of methane in the landfill gas as measured by Method 3C.	Source test records.	02 - Landfill Gas Flare	Y	C	The Milner Butte Landfill will perform the initial performance test no later than 180 days after the initial startup of the approved control system using the test methods specified in Section 60.754(d).
40 CFR 60.755(a)(1)	For the purpose of calculating the maximum expected gas generation flow rate from the landfill to determine compliance with Section 60.752(b)(ii)(A)(1), one of the equations listed should be used.	Perform calculations in accordance with 40 CFR 60.755(a)(1).	01 - Landfill	Y	C	These calculations are presented in the Collection and Control System Design document submitted on August 19, 2010.

Applicable Regulation	Requirement	Method of Determining Compliance	Affected Emission Units	Compliance (Y, N or NA)	Continuous or Intermittent Compliance (I or C)	Comments
40 CFR 60.755(a)(2)	For the purpose of determining sufficient density of gas collectors for compliance with Section 60.752(b)(2)(ii)(A)(2), the system shall be capable of controlling and extracting gas from all portions of the landfill sufficient to meet all operation and performance standards.	Operational records and monitoring records.	01 - Landfill	Y	C	The Collection and Control System Design Plan was submitted on August 19, 2010.
40 CFR 60.755(a)(3)	Measure gauge pressure in the gas collection header at each individual well, monthly. Initiate corrective action within 5 days if a positive pressure exists. Expand the gas collection system within 120 days if negative pressure cannot be achieved within 15 days.	Operational records and monitoring records.	01 - Landfill	Y	C	The Milner Butte Landfill has submitted an alternative timeline for correcting exceedances.
40 CFR 60.755(a)(5)	Monitor each well monthly for temperature and nitrogen or oxygen. Initiate corrective action within 5 days if a an exceedance occurs. Expand the gas collection system within 120 days if the exceedance cannot be corrected within 15 days.	Operational records and monitoring records.	01 - Landfill	Y	C	The Milner Butte Landfill has submitted an alternative timeline for correcting exceedances.
40 CFR 60.755(b)	Pleace each well or design component in the approved design plan. Intall wells no later than 60 days after 5 years or more if an active area, or 2 years or more if closed or at final grade.	Operational records and monitoring records.	01 - Landfill	Y	C	The Collection and Control System Design Plan was submitted on August 19, 2010.
40 CFR 60.755(c)	Perform Surface Emission Monitoring on a quarterly basis.	Surface Emission Monitoring records.	01 - Landfill	Y	C	The Milner Butte Landfill will perform Surface Emissions Monitoring on a quarterly basis after initial startup of the collection system.
40 CFR 60.756(a)	Measure the gauge pressure, nitrogen or oxygen concentration, and temperature at each wellhead on a monthly basis.	Operational records and monitoring records.	01 - Landfill	Y	C	Records kept on site.
40 CFR 60.756(b)(1)	Install a temperature monitoring device with a continuous recorder in conjunction with an enclosed combustor.	Operational records and monitoring records.	02 - Landfill Gas Flare	Y	C	Records kept on site.

Applicable Regulation	Requirement	Method of Determining Compliance	Affected Emission Units	Compliance (Y, N or NA)	Continuous or Intermittent Compliance (I or C)	Comments
40 CFR 60.756(b)(2)	Install a gas flow rate measuring device and record the flow to the control device at least every 15 minutes.	Operational records and monitoring records.	02 - Landfill Gas Flare	Y	C	Records kept on site.
40 CFR 60.756(e)	Provide satisfactory information if seeking approval for alternative monitoring parameters to those required by Section 70.753.	NA	01 - Landfill	Y	C	The Collection and Control System Design Plan was submitted on August 19, 2010 and contains alternative monitoring procedures.
40 CFR 60.756(f)	Perform Surface Emission Monitoring on a quarterly basis.	Surface Emission Monitoring records.	01 - Landfill	Y	C	The Milner Butte Landfill will perform Surface Emissions Monitoring on a quarterly basis after initial startup of the collection system.
40 CFR 60.757(a)	Submit an initial design capacity report.	Submit an initial design capacity report.	01 - Landfill	Y	C	An initial design capacity report was submitted in May 1993.
40 CFR 60.757(b)(3)	Install a collection and control system in compliance with Section 752(b)(2).	Operational records and monitoring records.	01 - Landfill	Y	C	The Milner Butte Landfill has installed a colleciton and control system in compliance with Section 60.752(b)(2).
40 CFR 60.757(c)	Submit a collection and control system design plan within 1 year of exceeding NMOC emissions rate of 50 megagrams per year..	Submittal of a collection and control system design plan.	01 - Landfill	Y	C	The Collection and Control System Design Plan was submitted on August 19, 2010.
40 CFR 60.757(d)	Submit a closure report within 30 days after waste acceptance cessation.	Submittal of a closure report.	01 - Landfill	Y	C	Milner Butte is an active landfill.
40 CFR 60.757(e)	Submit an equipment removal report 30 days prior to removal or cessation of operation of the control equipment.	Submittal of an equipment removal report.	01 - Landfill 02 - Landfill Gas Flare	Y	C	No control equipment removal has occurred.
40 CFR 60.757(f)	Submit annaul reports of operational and monitoring records.	Submittal of annual reports.	01 - Landfill 02 - Landfill Gas Flare	Y	C	Operational records will be submitted with Annual Reports.
40 CFR 60.757(g)	Submit an initial performance test report.	Submittal of an initial performance test report.	01 - Landfill 02 - Landfill Gas Flare	Y	C	The Milner Butte Landfill will submit an initial performance test report by the required timeline.
40 CFR 60.758(a)	Keep records of the design capacity report, current amount of solid waste in place, and annual acceptance rates for at least 5 years.	Operational records and monitoring records.	01 - Landfill	Y	C	Records kept on site.
40 CFR 60.758(b)	Maintain control equipment records for the life of the control equipment.	Operational records and monitoring records.	02 - Landfill Gas Flare	Y	C	Records kept on site.
40 CFR 60.758(c)	Keep operational and monitoring records for 5 years.	Operational records and monitoring records.	01 - Landfill 02 - Landfill Gas Flare	Y	C	Records kept on site.
40 CFR 60.758(d)	Keep for the life of the site an up-to-date plot map of the existing and planned control system showing each collector.	Maintain a copy of an up-to-date plot map.	01 - Landfill	Y	C	Records kept on site.

Applicable Regulation	Requirement	Method of Determining Compliance	Affected Emission Units	Compliance (Y, N or NA)	Continuous or Intermittent Compliance (I or C)	Comments
40 CFR 60.758(d)(1)	Keep up-to-date, readily accessable records of the installation date and location of installed collectors.	Maintain records on site.	01 - Landfill	Y	C	Records kept on site.
40 CFR 60.758(d)(2)	Keep up-to-date, readily accessable records of the nature, date of deposition, amount, and location of waste excluded from	Maintain records on site.	01 - Landfill	Y	C	Records kept on site.
40 CFR 60.758(e)	Keep for at least 5 years records of all collection and control system exceedances of the operational standards in Section 60.753.	Maintain records on site.	01 - Landfill	Y	C	Records kept on site.
40 CFR 60.759(a)	Site extraction devices at a sufficient density throughout all gas producing areas.	Submittal of a collection and control system design plan.	01 - Landfill	Y	C	The Collection and Control System Design Plan was submitted on August 19, 2010.
40 CFR 60.759(b)	Construct the landfill gas extraction components of suitable material and size.	Submittal of a collection and control system design plan.	01 - Landfill	Y	C	The Collection and Control System Design Plan was submitted on August 19, 2010.
40 CFR 60.759(c)	Convey the landfill gas to a control system through the collection pipes. The gas mover equipment shall be sized appropriately.	Submittal of a collection and control system design plan.	01 - Landfill	Y	C	The Collection and Control System Design Plan was submitted on August 19, 2010.
40 CFR 61.153(a)(5)	Provide information to the administrator within 90 days of the effective date.	Submittal of information to the Administrator.	01 - Landfill	Y	C	The Milner Butte Landfill previously provided this infiromation to the Administrator.
40 CFR 61.154(c)	At the end of each operating day cover the asbestos-containing waste material with at least 6-inches of compacted nonasbestos-containing material.	Operational records and monitoring records.	01 - Landfill	Y	C	Records kept on site.
40 CFR 61.154(e)(1)	Maintain asbestos-containing waste material shipment records.	Operational records and monitoring records.	01 - Landfill	Y	C	Records kept on site.
40 CFR 61.154(e)(2)	Send a copy of the signed waste shipment record to the waste generator no longer than 30 days after receipt of the waste.	Operational records and monitoring records.	01 - Landfill	Y	C	Records kept on site.
40 CFR 61.154(e)(3)	Report in writing to the local, State, or EPA Regional office regarding the discrepancy and attempts to reconcile upon discovering a discrepancy between the quantity of waste on the waste shipment records and the quantity received.	Operational records and monitoring records.	01 - Landfill	Y	C	Records kept on site.

Applicable Regulation	Requirement	Method of Determining Compliance	Affected Emission Units	Compliance (Y, N or NA)	Continuous or Intermittent Compliance (I or C)	Comments
40 CFR 61.154(e)(4)	Retain a copy of records and reports for at least 2 years.	Operational records and monitoring records.	01 - Landfill	Y	C	Records kept on site.
40 CFR 61.154(f)	Maintain records of the location, depth and area, and quantity of asbestos-containing waste material withing the dipsoal site on a map until closure.	Operational records and monitoring records.	01 - Landfill	Y	C	Records kept on site.
40 CFR 61.154(g)	Upon closure, comply with the provisions of Section 61.151.	Operational records and monitoring records.	01 - Landfill	Y	C	Milner Butte is an active landfill.
40 CFR 61.154(h)	Submit to the Administrator, upon closure of the facility, a copy of records of asbestos waste disposal locations and quantities.	Submittal of records to the Administrator.	01 - Landfill	Y	C	Milner Butte is an active landfill.
40 CFR 61.154(i)	Furnish upon request, and make available, all records required under this section.	Provide records upon request.	01 - Landfill	Y	C	Records kept on site.
40 CFR 61.154(j)	Notify the Administrator in writing at least 45 days prior to excavating or disturbing any asbestos-containing waste material.	Submittal of excavation or disturbance procedures at least 45 days prior to activities.	01 - Landfill	Y	C	The Milner Butte Landfill will submit the required information in accordance with the timeline,
40 CFR 63.1960	Develop and maintain a written SSM plan on site.	Development of a written SSM plan.	01 - Landfill 02 - Landfill Gas Flare	Y	C	The Milner Butte Landfill will develop a written SSM plan by February 21, 2012 and will maintain a copy on site.
40 CFR 63.1980(a)	Keep records and reports as specified in 40 CFR Part 60, Subpart WWW. Submit the annual report described in 40 CFR 60.757(f) every 6 months.	Operational records and monitoring reports.	01 - Landfill 02 - Landfill Gas Flare	Y	C	The Milner Butte Landfill will keep the records and reports as specified in 40 CFR Part 60, Subpart WWW and submit the required reports every 6 months.
40 CFR 63.1980(b)	Keep the records and reports as specified in the general provisions of 40 CFR Part 60 and Table 1 of this subpart.	Operational records and monitoring reports.	01 - Landfill 02 - Landfill Gas Flare	Y	C	The Milner Butte Landfill will keep the records and reports as specified in the general provisions of 40 CFR Part 60 and Table 1 of this subpart.
IDAPA 58.01.01.123	All documents submitted to the Department shall contain a certification by a responsible official.	Certify all documents submitted to the Department by a responsible official.	01 - Landfill 02 - Landfill Gas Flare	Y	C	The Milner Butte Landfill will certify all documents submitted to the Department by a responsible official.
IDAPA 58.01.01.124	All documents submitted to the Department shall be truthful, accurate and complete.	NA	01 - Landfill 02 - Landfill Gas Flare	Y	C	The Milner Butte Landfill will verify all documents submitted to the Department are truthful, accurate and complete.
IDAPA 58.01.01.125	No person shall knowingly make any false statement, representation, or certification in any form, notice, or report required under any permit, or applicable rule or order in force.	NA	01 - Landfill 02 - Landfill Gas Flare	Y	C	The Milner Butte Landfill will not knowingly make any false statement, representation, or certification in any form, notice, or report required.

Applicable Regulation	Requirement	Method of Determining Compliance	Affected Emission Units	Compliance (Y, N or NA)	Continuous or Intermittent Compliance (I or C)	Comments
IDAPA 58.01.01.126	No person shall knowingly render inaccurate any monitoring device or method required under any permit, or any applicable rule or order in force.	NA	01 - Landfill 02 - Landfill Gas Flare	Y	C	The Milner Butte Landfill will not knowingly render inaccurate any monitoring device or method required under any permit, or any applicable rule or order in force.
IDAPA 58.01.01.135	A written report for each excess emissions event shall be submitted to the Department no later than 15 days after the beginning of such event.	Submittal of a written excess emissions report within 15 days of the event.	01 - Landfill 02 - Landfill Gas Flare	Y	C	The Milner Butte Landfill will comply submit the required excess emissions reports within the appropriate timeline.
IDAPA 58.01.01.136	Maintain excess emissions records at the factility for the most recent 5 year period.	Operational records and monitoring reports.	01 - Landfill 02 - Landfill Gas Flare	Y	C	Records kept on site.
IDAPA 58.01.01.157.01.a	Prior to conducting any emission test, submit a source test protocol to the Department at least 30 days in advance.	Submittal of a source test protocol to the Department at least 30 days in advance.	02 - Landfill Gas Flare	Y	C	The Milner Butte Landfill will submit a source test protocol at least 30 days in advance of the source test date.
IDAPA 58.01.01.157.02	Tests shall be conducted in accordance with listed requirements.	Perform source tests in accordance with the listed test requirements.	02 - Landfill Gas Flare	Y	C	The Milner Butte Landfill will perform source tests in accordance with the applicable requirements.
IDAPA 58.01.01.157.03	Provide notice of intent to test to the Department at least 15 days prior to the scheduled test.	Submittal of a notice of intent to test to the Department at least 15 days prior to the scheduled test.	02 - Landfill Gas Flare	Y	C	The Milner Butte Landfill will submit a notice of intent to test to the Department at least 15 days in advance of the source test date.
IDAPA 58.01.01.157.04	Submit a written report to the Department within 30 days of the completion of a source test.	Submittal of a written source test report to the Department within 30 days of the source test.	02 - Landfill Gas Flare	Y	C	The Milner Butte Landfill will submit a source test report to the Department within 30 days after the source test date.
IDAPA 58.01.01.161	Do not emit any contaminant which is toxic to humans, animal life, or vegetation in quantities or concentrations that injure or unreasonably affect human, animal life, or vegetation.	Operational records and monitoring reports.	01 - Landfill 02 - Landfill Gas Flare	Y	C	Records kept on site and submitted with semi-annual reports.
IDAPA 58.01.01.201	Obtain a permit to construct prior construction of any stationary source, facility, major facility, or major modification.	Obtain a permit to construct.	02 - Landfill Gas Flare	N	C	The Milner Butte Landfill is currently submitting for a permit to construct.
IDAPA 58.01.01.202	Permit to construct application procedures.	Submit a permit to construct application in accordance with the procedures.	02 - Landfill Gas Flare	Y	C	The Milner Butte Landfill is currently submitting for a permit to construct.
IDAPA 58.01.01.210	Demonstrate preconstruction compliance with Section 161 to the satisfaction of the Department.	Demonstrate preconstruction compliance with Section 161 to the satisfaction of the Department.	02 - Landfill Gas Flare	Y	C	The Milner Butte Landfill is currently submitting for a permit to construct.
IDAPA 58.01.01.301	Do not operate any Tier I source without an effective Tier I operating permit.	Obtain a Tier I operating permit.	01 - Landfill 02 - Landfill Gas Flare	N	C	The Milner Butte Landfill is currently submitting for a Tier I operating permit.

Applicable Regulation	Requirement	Method of Determining Compliance	Affected Emission Units	Compliance (Y, N or NA)	Continuous or Intermittent Compliance (I or C)	Comments
IDAPA 58.01.01.312	Submit a timely and complete permit application in accordance with Sections 311 through 315.	Submittal of a timely and complete permit application in accordance with Sections 311 through 315.	01 - Landfill 02 - Landfill Gas Flare	N	C	The Milner Butte Landfill is currently submitting for a Tier I operating permit.
IDAPA 58.01.01.313.01	Submit a complete application for an original Tier I operating permit by no later than June 1, 1996.	Submittal of complete application for an original Tier I operating permit.	01 - Landfill 02 - Landfill Gas Flare	N	C	The Milner Butte Landfill is currently submitting for a Tier I operating permit.
IDAPA 58.01.01.313.03	Submit a complete application to the Department for a renewal of the Tier I operating permit between 6 and 18 months before the expiration date of the existing Tier I operating permit.	Submittal of a complete application to the Department for a renewal of the Tier I operating permit between 6 and 18 months before the expiration date of the existing Tier I operating permit.	01 - Landfill 02 - Landfill Gas Flare	Y	C	The Milner Butte Landfill will submit a Tier I operating permit renewal application between 6 and 18 months before the existing Tier I operating permit expires.
IDAPA 58.01.01.625	Do not discharge any air pollutant into the atmosphere from any point of emission for a period or periods aggregating more than 3 minutes in any 60 minute period which is greater than 20 percent opacity.	Operational records and monitoring reports.	01 - Landfill 02 - Landfill Gas Flare	Y	C	Records kept on site and submitted with semi-annual reports.
IDAPA 58.01.01.651	Take resonable recautions to prevent particulate matter from becoming airborne.	Operational records and monitoring reports.	01 - Landfill 02 - Landfill Gas Flare	Y	C	Records kept on site and submitted with semi-annual reports.
IDAPA 58.01.01.676	Do not discharge into the atmosphere particulate matter in excess of 0.015 gr/dscf at 3 percent oxygen for any gas fuel buring equipment with a maximum rate input of 10 MMBTU/hr or more.	Operational records and monitoring reports.	02 - Landfill Gas Flare	Y	C	Records kept on site and submitted with semi-annual reports.
IDAPA 58.01.01.859.03	Landfills subject to Section 859 must comply with 40 CFR Part 60, Subpart WWW.	Comply with 40 CFR Part 60, Subpart, WWW	01 - Landfill 02 - Landfill Gas Flare	Y	C	The Milner Butte Landfill with comply with 40 CFR Part 60, Subpart WWW.
IDAPA 58.01.01.859.04	Landfills subject to Section 859 must comply with Title V as specified in Sections 300 through 399 of IDAPA 58.01.01.	Comply with Sections 300 through 399 of IDAPA 58.01.01.	01 - Landfill 02 - Landfill Gas Flare	Y	C	The Milner Butte Landfill with comply with Sections 300 through 399 of IDAPA 58.01.01.
IDAPA 58.01.01.859.04.a	Existing large landfills with modifications after May 30, 1991 must submit a complete Title V operating permit application by June 1, 2000.	Submittal of a complete application for a Title V opreating permit by June 1, 2000.	01 - Landfill 02 - Landfill Gas Flare	N	C	The Milner Butte Landfill is currently submitting for a Title V operating permit.
IDAPA 58.01.01.859.05	Submit an Initial Design Capacity Report and an Initial NMOC Report within 30 days of the effective date of Section 859.	Submittal of an Initial Design Capacity Report and an Initial NMOC Report within 30 days of the effective date of Section 859.	01 - Landfill	Y	C	The Milner Butte Landfill has previously submitted this reports.

Attachment B

TABLE 1.
SUMMARY OF TOXIC AIR CONTAMINANT DATA
LANDFILL GAS CHARACTERIZATION
MILNER BUTTE LANDFILL
BURLEY, IDAHO

CAS	COMPOUNDS			Compound Concentration Found in LFG [2] (ppmv)
	TOXIC AIR CONTAMINANTS [1]			
71-55-6	1,1,1-Trichloroethane (methyl chloroform)			0.168
79-34-5	1,1,2,2-Tetrachloroethane			0.070
75-34-3	1,1-Dichloroethane			0.741
75-35-4	1,1-Dichloroethene			0.092
107-06-2	1,2-Dichloroethane			0.120
78-87-5	1,2-Dichloropropane			0.023
107-13-1	Acrylonitrile			0.036
71-43-2	Benzene			0.972
75-15-0	Carbon disulfide (3)			0.320
56-23-5	Carbon tetrachloride			0.007
463-58-1	Carbonyl sulfide (3)			0.183
108-90-7	Chlorobenzene			0.227
75-45-6	Chlorodifluoromethane (Freon 22)			0.355
75-00-3	Chloroethane (ethyl chloride)			0.239
67-66-3	Chloroform			0.021
106-46-7	Dichlorobenzene (1,2; 1,3; and 1,4)			1.607
75-09-2	Dichloromethane (Methylene Chloride)			3.395
100-41-4	Ethylbenzene			6.789
106-93-4	Ethylene Dibromide (Dibromoethane)			0.046
110-54-3	Hexane			2.324
7647-01-0	Hydrochloric acid [3]			10.742
7783-06-4	Hydrogen sulfide			23.578
7439-97-6	Mercury [4]			2.92E-04
74-87-3	Methyl Chloride (Chloromethane)			0.249
78-93-3	Methyl ethyl ketone			10.557
108-10-1	Methyl isobutyl ketone			0.750
127-18-4	Perchloroethylene (tetrachloroethylene)			1.193
108-88-3	Toluene			25.405
79-01-6	Trichloroethylene			0.681
75-01-4	Vinyl chloride			1.077
1330-20-7	Xylenes			16.582
TOTALS	TACs			108.549

NOTES:
(1) Regulated toxic compounds include hazardous air pollutants (HAPs) defined by the U.S. EPA (Title III of the Clean Air Act)
(2) Average concentration of compounds found in LFG based on "Waste Industry Air Coalition" (WIAC) Comparison of Recent Landfill Gas Analyses with or AP-42 if WIAC values not available.
(3) Concentration of HCl is based on concentrations of chlorinated compounds in WIAC.
(4) Concentration of Mercury based on the Revised EPA AP-42 Section 2.4 Table 2.4-1 (11/98).

NA = Not Analyzed
ND = Not Detected
CFCs = Chlorofluorohydrocarbons
TACs = Toxic Air Contaminants

TABLE 2.
MAXIMUM POTENTIAL TO EMIT CONTROLLED EMISSIONS FROM LANDFILL GAS (EU 02)
MILNER BUTTE LANDFILL
BURLEY, IDAHO

CAS	COMPOUNDS [1]	Molecular Weight (g/Mol)	Concentration of Compounds Found In LFG [2] (ppmv)	Pollutant Flow Rate to Flare [3] (tons/yr)	Compound-Specific Flare Destruction Efficiency [4]	Controlled LFG Emissions After Flare Destruction (lbs/hr)	Controlled LFG Emissions After Flare Destruction [5] (tons/yr)
	HAZARDOUS AIR POLLUTANTS						
71-55-6	1,1,1-Trichloroethane (methyl chloroform)	133.42	0.1680	0.02	98.00%	1.05E-04	4.59E-04
79-34-5	1,1,2,2-Tetrachloroethane	167.85	0.0700	0.01	98.00%	5.49E-05	2.41E-04
75-34-3	1,1-Dichloroethane	98.95	0.7410	0.08	98.00%	3.43E-04	1.50E-03
75-35-4	1,1-Dichloroethene	96.94	0.0920	0.01	98.00%	4.17E-05	1.83E-04
107-06-2	1,2-Dichloroethane	98.96	0.1200	0.01	98.00%	5.55E-05	2.43E-04
78-87-5	1,2-Dichloropropane	112.98	0.0230	0.00	98.00%	1.21E-05	5.32E-05
107-13-1	Acrylonitrile	53.06	0.0360	0.00	99.70%	1.34E-06	5.87E-06
71-43-2	Benzene	78.11	0.9720	0.08	99.70%	5.32E-05	2.33E-04
75-15-0	Carbon disulfide (7)	76.13	0.3200	0.02	100.00%	0.00E+00	0.00E+00
56-23-5	Carbon tetrachloride	153.84	0.0070	0.00	98.00%	5.03E-06	2.20E-05
463-58-1	Carbonyl sulfide	60.07	0.1830	0.01	100.00%	0.00E+00	0.00E+00
108-90-7	Chlorobenzene	112.56	0.2270	0.03	98.00%	1.19E-04	5.23E-04
75-45-6	Chlorodifluoromethane (Freon 22)	86.47	0.3550	0.03	98.00%	1.43E-04	6.28E-04
75-00-3	Chloroethane (ethyl chloride)	64.52	0.2390	0.02	98.00%	7.21E-05	3.16E-04
67-66-3	Chloroform	119.39	0.0210	0.00	98.00%	1.17E-05	5.13E-05
106-46-7	Dichlorobenzene	147	1.6070	0.24	98.00%	1.10E-03	4.84E-03
75-09-2	Dichloromethane (methylene chloride)	84.94	3.3950	0.30	98.00%	1.35E-03	5.90E-03
100-41-4	Ethylbenzene	106.16	6.7890	0.74	99.70%	5.05E-04	2.21E-03
106-93-4	Ethylene dibromide	187.88	0.0460	0.01	98.00%	4.04E-05	1.77E-04
110-54-3	Hexane	86.17	2.3240	0.20	99.70%	1.40E-04	6.15E-04
7647-01-0	Hydrochloric acid	36.50	10.7420	0.40	98.00%	9.25E-02	4.05E-01
7783-06-4	Hydrogen sulfide	34.08	23.5780	0.82	100.00%	0.00E+00	0.00E+00
7439-97-6	Mercury (total)	200.61	0.0003	0.00	0.00%	1.37E-05	6.00E-05
74-87-3	Methyl chloride (chloromethane)	50.49	0.2490	0.01	98.00%	5.88E-05	2.57E-04
78-93-3	Methyl ethyl ketone	72.11	10.5570	0.78	99.70%	5.34E-04	2.34E-03
108-10-1	Methyl isobutyl ketone	100.16	0.7500	0.08	99.70%	5.27E-05	2.31E-04
127-18-4	Perchloroethylene (tetrachloroethylene)	165.83	1.1930	0.20	98.00%	9.25E-04	4.05E-03
108-88-3	Toluene	92.13	25.4050	2.40	99.70%	1.64E-03	7.19E-03
79-01-6	Trichloroethylene	131.38	0.6810	0.09	98.00%	4.18E-04	1.83E-03
75-01-4	Vinyl chloride	62.50	1.0770	0.07	98.00%	3.15E-04	1.38E-03
1330-20-7	Xylenes	106.16	16.5820	1.80	99.70%	1.23E-03	5.41E-03
TOTALS	HAPs			8.47			4.46E-01
Total Non-Methane Organics (NMOCs) as Hexane		86.18	1200	105.86	98.00%	4.83E-01	2.12
Volatile Organic Compounds (VOCs)		86.18	468	41.29	98.00%	1.89E-01	0.83
Criteria Air Pollutants		Molecular Weight (g/Mol)	Concentration of Compound (ppmv)	Emission Factor (lb/MMBtu) [6]	Emission Factor (lb/hr/scfm methane)	Maximum Emissions from Flare (lbs/hr)	Maximum Emissions from Flare (tons/yr)
Nitrogen oxides (NOx)				0.060		2.70	11.83
Sulfur oxides (as SO2) [7]		64.10	150.00			2.25	9.84
Carbon monoxide (CO)				0.200		9.00	39.42
Particulates (PM10)					0.001	0.75	3.29
TOTAL CRITERIA POLLUTANTS							64.37

NOTES:
(1) List of hazardous air pollutants (HAPs) regulated by U.S. EPA that are anticipated to be found in LFG as determined from a list in AP-42 Section 2.4
(2) Average concentration of compounds found in LFG based on "Waste Industry Air Coalition Comparison of Recent Landfill Gas Analyses with Historic AP-42 Values."
(3) Based on concentrations in Column D and proposed maximum landfill gas flow of flare
(4) Compound-specific flare destruction efficiencies: 98.0% for VOCs and NMOCs, 98% for Halogenated Species, 99.7% for Non-Halogenated Species, 0% for Mercury (per AP-42 Table 2.4-3)
(5) Controlled emissions of HAPs, NMOCs, and VOCs after destruction in flare equals uncontrolled emissions x (1- flare destruction efficiency).
(6) Controlled emissions of NOx, SOx, CO, and PM10 were estimated with the following emission factors: NOx = 0.06 and CO = 0.2 lb/MMBtu (manufacturer's guarantee); PM-10 = 0.001 lb/hr/dscfm (AP-42); and SOx (assume conversion of reduced sulfur @ 150 ppmv to sulfur dioxide).
(7) Destruction efficiency of reduced sulfur compounds assumed to be 100%; i.e., complete conversion to sulfur dioxide

MODEL VARIABLES
Maximum capacity of flare: 1500 cfm

TABLE 3.
ACTUAL CONTROLLED EMISSIONS FROM LANDFILL GAS (EU 02)
MILNER BUTTE LANDFILL
BURLEY, IDAHO

CAS	COMPOUNDS [1]	Molecular Weight (g/Mol)	Concentration of Compounds Found In LFG [2] (ppmv)	Pollutant Flow Rate to Flare [3] (tons/yr)	Compound-Specific Flare Destruction Efficiency [4]	Controlled LFG Emissions After Flare Destruction (lbs/hr)	Controlled LFG Emissions After Flare Destruction [5] (tons/yr)
	HAZARDOUS AIR POLLUTANTS						
71-55-6	1,1,1-Trichloroethane (methyl chloroform)	133.42	0.1680	0.01	98.00%	2.44E-05	1.07E-04
79-34-5	1,1,2,2-Tetrachloroethane	167.85	0.0700	0.00	98.00%	1.28E-05	5.61E-05
75-34-3	1,1-Dichloroethane	98.95	0.7410	0.02	98.00%	8.00E-05	3.50E-04
75-35-4	1,1-Dichloroethene	96.94	0.0920	0.00	98.00%	9.73E-06	4.26E-05
107-06-2	1,2-Dichloroethane	98.96	0.1200	0.00	98.00%	1.30E-05	5.67E-05
78-87-5	1,2-Dichloropropane	112.98	0.0230	0.00	98.00%	2.83E-06	1.24E-05
107-13-1	Acrylonitrile	53.06	0.0360	0.00	99.70%	3.12E-07	1.37E-06
71-43-2	Benzene	78.11	0.9720	0.02	99.70%	1.24E-05	5.44E-05
75-15-0	Carbon disulfide (7)	76.13	0.3200	0.01	100.00%	0.00E+00	0.00E+00
56-23-5	Carbon tetrachloride	153.84	0.0070	0.00	98.00%	1.17E-06	5.14E-06
463-58-1	Carbonyl sulfide	60.07	0.1830	0.00	100.00%	0.00E+00	0.00E+00
108-90-7	Chlorobenzene	112.56	0.2270	0.01	98.00%	2.79E-05	1.22E-04
75-45-6	Chlorodifluoromethane (Freon 22)	86.47	0.3550	0.01	98.00%	3.35E-05	1.47E-04
75-00-3	Chloroethane (ethyl chloride)	64.52	0.2390	0.00	98.00%	1.68E-05	7.37E-05
67-66-3	Chloroform	119.39	0.0210	0.00	98.00%	2.73E-06	1.20E-05
106-46-7	Dichlorobenzene	147	1.6070	0.06	98.00%	2.58E-04	1.13E-03
75-09-2	Dichloromethane (methylene chloride)	84.94	3.3950	0.07	98.00%	3.15E-04	1.38E-03
100-41-4	Ethylbenzene	106.16	6.7890	0.17	99.70%	1.18E-04	5.16E-04
106-93-4	Ethylene dibromide	187.88	0.0460	0.00	98.00%	9.43E-06	4.13E-05
110-54-3	Hexane	86.17	2.3240	0.05	99.70%	3.28E-05	1.43E-04
7647-01-0	Hydrochloric acid	36.50	10.7420	0.09	98.00%	2.16E-02	9.45E-02
7783-06-4	Hydrogen sulfide	34.08	23.5780	0.19	100.00%	0.00E+00	0.00E+00
7439-97-6	Mercury (total)	200.61	0.0003	0.00	0.00%	3.19E-06	1.40E-05
74-87-3	Methyl chloride (chloromethane)	50.49	0.2490	0.00	98.00%	1.37E-05	6.01E-05
78-93-3	Methyl ethyl ketone	72.11	10.5570	0.18	99.70%	1.25E-04	5.45E-04
108-10-1	Methyl isobutyl ketone	100.16	0.7500	0.02	99.70%	1.23E-05	5.38E-05
127-18-4	Perchloroethylene (tetrachloroethylene)	165.83	1.1930	0.05	98.00%	2.16E-04	9.45E-04
108-88-3	Toluene	92.13	25.4050	0.56	99.70%	3.83E-04	1.68E-03
79-01-6	Trichloroethylene	131.38	0.6810	0.02	98.00%	9.76E-05	4.27E-04
75-01-4	Vinyl chloride	62.50	1.0770	0.02	98.00%	7.34E-05	3.22E-04
1330-20-7	Xylenes	106.16	16.5820	0.42	99.70%	2.88E-04	1.26E-03
TOTALS	HAPs			1.98			1.04E-01
Total Non-Methane Organics (NMOCs) as Hexane		86.18	1200	24.70	98.00%	1.13E-01	0.49
Volatile Organic Compounds (VOCs)		86.18	468.00	9.63	98.00%	4.40E-02	0.19
Criteria Air Pollutants		Molecular Weight (g/Mol)	Concentration of Compound (ppmv)	Emission Factor (lb/MMBtu) [6]	Emission Factor (lb/hr/scfm methane)	Estimated Emissions from Flare (lbs/hr)	Estimated Emissions from Flare (tons/yr)
Nitrogen oxides (NOx)				0.060		0.63	2.76
Sulfur oxides (as SO2) [7]		64.10	150.00			0.52	2.30
Carbon monoxide (CO)				0.200		2.10	9.20
Particulates (PM10)					0.001	0.18	0.77
TOTAL CRITERIA POLLUTANTS							15.02

NOTES:
(1) List of hazardous air pollutants (HAPs) regulated by U.S. EPA that are anticipated to be found in LFG as determined from a list in AP-42 Section 2.4
(2) Average concentration of compounds found in LFG based on "Waste Industry Air Coalition Comparison of Recent Landfill Gas Analyses with Historic AP-42 Values."
(3) Based on concentrations in Column D and proposed maximum landfill gas flow of flare
(4) Compound-specific flare destruction efficiencies: 98.0% for VOCs and NMOCs, 98% for Halogenated Species, 99.7% for Non-Halogenated Species, 0% for Mercury (per AP-42 Table 2.4-3)
(5) Controlled emissions of HAPs, NMOCs, and VOCs after destruction in flare equals uncontrolled emissions x (1- flare destruction efficiency).
(6) Controlled emissions of NOx, SOx, CO, and PM10 were estimated with the following emission factors: NOx = 0.06 and CO = 0.2 lb/MMBtu (manufacturer's guarantee); PM-10 = 0.001 lb/hr/dscfm (AP-42); and SOx (assume conversion of reduced sulfur @ 150 ppmv to sulfur dioxide).
(7) Destruction efficiency of reduced sulfur compounds assumed to be 100%; i.e., complete conversion to sulfur dioxide

MODEL VARIABLES
Current flare flow rate: 350 cfm
Current methane content of LFG: 50.0%

TABLE 4.
LANDFILL GAS NMOC AND VOC EMISSIONS (EU 01)
MILNER BUTTE LANDFILL
BURLEY, IDAHO

Gas / Pollutant	Total LFG Production [1, 2] (tons/yr)	LFG Collected by the GCCS [3] (tons/yr)	Fugitive LFG [3] (tons/yr)	Non-Fugitive LFG [4] (tons/yr)
NMOC	63.58	47.69	15.90	2.12
VOCs [2]	24.80	18.60	6.20	0.83

Gas / Pollutant	Emission Rate [1]				
	(Mg/year)	(m3/year)	(av ft3/min)	(ft3/year)	(tons/year)
Total landfill gas	16,782	13,438,221	902.9	474,570,781	18,460.16
NMOC	58	16,126	1.1	569,485	63.58

Notes:
(1) These emission rates were calculated based on the U.S. EPA LandGEM v3.02 model for 2010.
(2) VOCs are calculated at 39% of NMOC (by weight) per AP-42 Table 2.4-2. for No or Unknown co-disposal.
(3) Based on assumed GCCS gas collection efficiency of 75% per AP-42 paragraph 2.4.4.2.
(4) Emissions after combustion in the flare and release from flare stack.

TABLE 5.
ACTUAL FUGITIVE DUST EMISSIONS FROM WIND EROSION OF STOCKPLIES (EU 03)
MILNER BUTTE LANDFILL
BURLEY, IDAHO

Pollutant	Particle Size Multiplier k [1]	TSP Emission Factor [2]	Emission Factor [3]	Units	Total Exposed Area (acres)	Emissions Amount (tons/yr)
PM30	0.082	0.380	0.380	tons/acre-year	15.8	6.00
PM10	0.016	0.380	0.074	tons/acre-year	15.8	1.17
PM2.5	0.004	0.380	0.019	tons/acre-year	15.8	0.29

Notes:
(1) k values are from AP-42 Table 13.2-1.1.
(2) TSP (i.e., PM30) emission factor is 0.38 from AP-42 Table 11.9-4.
(3) Per AP-42, the emission factors are calculated as: $E_{PMX} = E_{PM30} \times (k_{PMX}) / (k_{PM30})$

TABLE 6.
ACTUAL FUGITIVE DUST (PM_x) EMISSIONS FROM PAVED ROADS FOR REFUSE VEHICLES (EU 04)
MILNER BUTTE LANDFILL
BURLEY, IDAHO

		Vehicle Miles Traveled [1]					PM2.5			PM10			PM30		
		Annually		Daily Average (5 days/wk)		Vehicle Weight [5]	Emission Factor for Paved Roads [2]	Controlled Emission Factor for Paved Roads [3]	Annual Emissions from Paved Roads	Emission Factor for Paved Roads [2]	Controlled Emission Factor for Paved Roads [3]	Annual Emissions from Paved Roads	Emission Factor for Paved Roads [2]	Controlled Emission Factor for Paved Roads [3]	Annual Emissions from Paved Roads
	Total trips in 2009 [4]	paved	unpaved	paved	unpaved	(tons)	(lb/VMT)	(lb/VMT)	(tpy)	(lb/VMT)	(lb/VMT)	(tpy)	(lb/VMT)	(lb/VMT)	(tpy)
Commercial Refuse Vehicle (full)	6358	1271.6	5086.4	4.9	19.6	23.2	0.202	0.050	0.032	0.806	0.202	0.128	4.133	1.033	0.657
Commercial Refuse Vehicle (empty)	6358	1271.6	5086.4	4.9	19.6	13.5	0.090	0.022	0.014	0.359	0.090	0.057	1.840	0.460	0.293
Refuse Transfer Truck (full)	7300	1460.0	5840.0	5.6	22.5	23.2	0.202	0.050	0.037	0.806	0.202	0.147	4.133	1.033	0.754
Refuse Transfer Truck (empty)	7300	1460.0	5840.0	5.6	22.5	13.5	0.090	0.022	0.016	0.359	0.090	0.066	1.840	0.460	0.336
Self Haul Customer (Small Trucks, other vehicles)	8614	3445.6	0.0	13.3	0.0	2.0	0.005	0.001	0.002	0.020	0.005	0.009	0.104	0.026	0.045
Roll Off	494	197.6	790.4	0.8	3.0	23.2	0.202	0.050	0.005	0.806	0.202	0.020	4.133	1.033	0.102
TOTAL		**9106**	**22643**	**35.0**	**87.1**				**0.107**			**0.427**			**2.187**

Notes:
(1) From the entrance to the public unloading area = 0.4 miles of paved road (roundtrip) based on road miles calculated by using the site map.
From the entrance to the landfill active area = 0.4 mile of paved road and 1.6 mile of unpaved road (roundtrip).
(2) Emission factor E = k*(s/2)^0.65*(W/3)^1.5, whe k = particle size multiplier = 0.004 for PM2.5 (AP-42 Table 13.2-1.1)
0.016 for PM10 (AP-42 Table 13.2-1.1)
0.082 for PM30 (AP-42 Table 13.2-1.1)
s = silt loading factor = 7.4 g/m^2 (AP-42 Table 13.2.1-4)
W = vehicle weight (tons)

(3) Control efficiency is assumed to be 75% based on AP-42 Figure 13.2.2-2.
(4) Number of trips based on 2009 scale records.
(5) Vehicle Weights based on average 2009 Gross and Tare scale data.

TABLE 7.
ACTUAL FUGITIVE DUST (PM_X) EMISSIONS FROM UNPAVED ROADS FOR REFUSE VEHICLES (EU 05)
MILNER BUTTE LANDFILL
BURLEY, IDAHO

		Vehicle Miles Traveled [1]					PM2.5			PM10			PM30		
		Annually		Daily Average (5 days/wk)		Vehicle Weight [5]	Emission Factor for Unpaved Roads [2]	Controlled Emission Factor for Unpaved Roads [3]	Annual Emissions from Unpaved Roads	Emission Factor for Unpaved Roads [2]	Controlled Emission Factor for Unpaved Roads [3]	Annual Emissions from Unpaved Roads	Emission Factor for Unpaved Roads [2]	Controlled Emission Factor for Unpaved Roads [3]	Annual Emissions from Unpaved Roads
	Total trips in 2009 [4]	paved	unpaved	paved	unpaved	(tons)	(lb/VMT)	(lb/VMT)	(tpy)	(lb/VMT)	(lb/VMT)	(tpy)	(lb/VMT)	(lb/VMT)	(tpy)
Commercial Refuse Vehicle (full)	6358	1271.6	5086.4	4.9	19.6	23.2	0.328	0.082	0.209	2.140	0.535	1.360	7.926	1.981	5.039
Commercial Refuse Vehicle (empty)	6358	1271.6	5086.4	4.9	19.6	13.5	0.257	0.064	0.164	1.678	0.420	1.067	6.218	1.554	3.953
Refuse Transfer Truck (full)	7300	1460.0	5840.0	5.6	22.5	23.2	0.328	0.082	0.239	2.140	0.535	1.562	7.926	1.981	5.786
Refuse Transfer Truck (empty)	7300	1460.0	5840.0	5.6	22.5	13.5	0.257	0.064	0.188	1.678	0.420	1.225	6.218	1.554	4.539
Self Haul Customer (Small Trucks, other vehicles)	8614	3445.6	0.0	13.3	0.0	2.0	0.109	0.027	0.000	0.710	0.177	0.000	2.629	0.657	0.000
Roll Off	494	197.6	790.4	0.8	3.0	23.2	0.328	0.082	0.032	2.140	0.535	0.211	7.926	1.981	0.783
TOTAL		**9106**	**22643**	**35.0**	**87.1**				**0.832**			**5.426**			**20.100**

Notes:

(1) From the entrance to the public unloading area = 0.06 miles of paved road (roundtrip) based on road miles calculated by using the site map.
From the entrance to the landfill active area = 0.152 mile of paved road and 0.54 mile of unpaved road (roundtrip).

(2) Emission factor E = k*(s/12)^a*(W/3)^b, where k = particle size multiplier =

	0.23 for PM2.5	(AP-42 Table 13.2.2-2)
	1.5 for PM10	(AP-42 Table 13.2.2-2)
	4.9 for PM30	(AP-42 Table 13.2.2-2)
s = surface material silt content (%) =	6.4	(AP-42 Table 13.2.2-1)
W = vehicle weight (tons)		
a =	0.9 for PM2.5	(AP-42 Table 13.2.2-2)
	0.9 for PM10	(AP-42 Table 13.2.2-2)
	0.7 for PM30	(AP-42 Table 13.2.2-2)
b =	0.45 for PM2.5	(AP-42 Table 13.2.2-2)
	0.45 for PM10	(AP-42 Table 13.2.2-2)
	0.45 for PM30	(AP-42 Table 13.2.2-2)

(3) Control efficiency is assumed to be 75% based on AP-42 Figure 13.2.2-2.
(4) Number of trips based on 2009 scale records.
(5) Vehicle Weights based on average 2009 Gross and Tare scale data.

TABLE 8.
SCREENING EMISSIONS LEVELS AND ACCEPTABLE AMBIENT CONCENTRATIONS
NON-CARCINOGENIC AND CARCINOGENIC COMPOUNDS
MILNER BUTTE LANDFILL
BURLEY, IDAHO

CAS	COMPOUNDS	EL (lb/hr)	AAC (24hr avg) (mg/m^3) [3]	AAC (Annual avg) (mg/m^3) [4]	Actual Emissions (lb/hr)	Emissions Over EL	PTE Emissions (lb/hr)	Emissions Over EL
	HAZARDOUS AIR POLLUTANTS							
71-55-6	1,1,1-Trichloroethane (methyl chloroform)	127	95.5	-	2.44E-05	No	1.05E-04	No
79-34-5	1,1,2,2-Tetrachloroethane	1.10E-05	-	1.70E-02	1.28E-05	Yes	5.49E-05	Yes
75-34-3	1,1-Dichloroethane	2.50E-04	-	3.80E-02	8.00E-05	No	3.43E-04	Yes
75-35-4	1,1-Dichloroethene (1,1-Dichloroethylene)	1.30E-04	-	2.00E-02	9.73E-06	No	4.17E-05	No
107-06-2	1,2-Dichloroethane	2.50E-04	-	3.80E-02	1.30E-05	No	5.55E-05	No
78-87-5	1,2-Dichloropropane (Propylene dichloride)	23.133	17.35	-	2.83E-06	No	1.21E-05	No
107-13-1	Acrylonitrile	9.80E-05	-	1.50E-02	3.12E-07	No	1.34E-06	No
71-43-2	Benzene	8.00E-04	-	1.20E-01	1.24E-05	No	5.32E-05	No
75-15-0	Carbon disulfide	2	1.5	-	0.00E+00	No	0.00E+00	No
56-23-5	Carbon tetrachloride	4.40E-04	-	6.70E-02	1.17E-06	No	5.03E-06	No
463-58-1	Carbonyl sulfide	0.027	0.02	-	0.00E+00	No	0.00E+00	No
108-90-7	Chlorobenzene	23.3	17.5	-	2.79E-05	No	1.19E-04	No
75-45-6	Chlorodifluoromethane (Freon 22) [1]	-	-	-	3.35E-05	No	1.43E-04	No
75-00-3	Chloroethane (ethyl chloride)	176	132	-	1.68E-05	No	7.21E-05	No
67-66-3	Chloroform	2.80E-04		4.30E-02	2.73E-06	No	1.17E-05	No
106-46-7	Dichlorobenzene (1,2; 1,3; and 1,4)	30	22.5	-	2.58E-04	No	1.10E-03	No
75-09-2	Dichloromethane (Methylene chloride)	1.60E-03	-	2.40E-01	3.15E-04	No	1.35E-03	No
100-41-4	Ethylbenzene	29	21.75	-	1.18E-04	No	5.05E-04	No
106-93-4	Ethylene Dibromide (Dibromoethane)	3.00E-05	-	4.50E-03	9.43E-06	No	4.04E-05	Yes
110-54-3	Hexane	12	9	-	3.28E-05	No	1.40E-04	No
7647-01-0	Hydrochloric acid (Hydrogen chloride)	5.00E-02	0.375	-	2.16E-02	No	9.25E-02	Yes
7783-06-4	Hydrogen sulfide	0.933	0.7	-	0.00E+00	No	0.00E+00	No
7439-97-6	Mercury [2]	1.00E-03	5.00E-04	-	3.19E-06	No	1.37E-05	No
74-87-3	Methyl Chloride (Chloromethane)	6.867	5.15	-	1.37E-05	No	5.88E-05	No
78-93-3	Methyl ethyl ketone	39.3	29.5	-	1.25E-04	No	5.34E-04	No
108-10-1	Methyl isobutyl ketone	13.7	10.25	-	1.23E-05	No	5.27E-05	No
127-18-4	Perchloroethylene (tetrachloroethylene)	1.30E-02	-	2.1	2.16E-04	No	9.25E-04	No
108-88-3	Toluene	25	18.75	-	3.83E-04	No	1.64E-03	No
79-01-6	Trichloroethylene	17.93	13.45	-	9.76E-05	No	4.18E-04	No
75-01-4	Vinyl chloride	9.40E-04	-	1.40E-01	7.34E-05	No	3.15E-04	No
1330-20-7	Xylenes	29	21.75	-	2.88E-04	No	1.23E-03	No

Notes:
(1) Neither compound nor CAS number listed in IDAPA 58.01.01.585 - 586.
(2) Emissions level and acceptable ambient concentrations for Mercury are lowest concentrations listed per IDAPA 58.01.01.585.
(3) 24-hour average concentrations are for non-carcinogenic substances.
(4) Annual average concentrations are for carcinogenic substances.

TABLE 9.
CRITERIA POLLUTANT, PM, AND NMOC EMISSION SUMMARY
MILNER BUTTE LANDFILL
BURLEY, IDAHO

Criteria Air Pollutants	lbs/hr	tons/year
Volatile Organic Compounds (VOCs)	4.43	7.03
Nitrogen oxides (NO_x)	2.70	11.83
Sulfur oxides (as SO_2)	2.25	9.84
Carbon monoxide (CO)	9.00	39.42
Particulates (PM_{10})	2.35	10.31
TOTAL CRITERIA POLLUTANTS	20.74	78.42

Pollutant	lbs/hr	tons/year
Particulates ($PM_{2.5}$)	0.28	1.23
Particulates (PM_{30})	6.46	28.29
Total Non-Methane Organics (NMOCs) as Hexane	4.11	18.01

Note:
All values are potential to emit (PTE) except for particulate emissions, because PTE emissions for particulates cannot be calculated.

October 6th , 2010

Re: *PEI* Enclosed Landfill Gas Flare – Guaranteed Performance Specifications

The following is a synopsis of the guaranteed emissions levels and destruction efficiencies of the ***PEI*** enclosed landfill gas flare proposed for your **Milner Butte Landfill** project. The emissions levels and destruction efficiencies stated herein are only guaranteed if testing is performed by an approved testing company with documented experience in emissions testing of low velocity landfill gas flare exhaust streams.

The flare is designed to combust from **150 to 1500 SCFM** of landfill gas having a calorific density of between **300 Btu/ft^3** and **500 Btu/ft^3**, as long as the thermal loading rate is between **4.5 MMBtu/hr** and **45.0 MMBtu/hr**.

Operated within the above criteria, the ***PEI*** flare will emit no more than **0.06 lb/MMBtu NOx** (evaluated as NO_2). Such guarantee is based on CEMS testing performed by a approved testing company using chemiluminescence analytical techniques compliant with EPA method 7E, and when the following equation is used as the basis of the emission calculation;

lb/MMBtu NOx = (ppm NOx / 10^6) x (46 lb/lb-mole / 385.3 dscf/lb-mole) x Ff * x 20.9 / (20.9 - % Stack O_2)

Operated within the above criteria, the flare will emit no more than **0.20 lb/MMBtu CO**. Such guarantee is based on CEMS testing performed by an approved testing company using NDIR/GFC analytical techniques compliant with EPA method 10, and when the following equation is used as the basis of the emission calculation;

lb/MMBtu CO = (ppm CO / 10^6) x (28 lb/lb-mole / 385.3 dscf/lb-mole) x Ff * x 20.9 / (20.9 - % Stack O_2)

*** The Ff (fuel factor) shall be as determined by laboratory analysis or per EPA Method 19, Table 19-1**

Operated within the above criteria, the flare will provide NMOC destruction efficiency compliant with Subpart Cc, 60.33c, (c) (2), i.e. ". . .shall **reduce NMOC by 98 weight percent**, or;" (c) (3) of that same section, i.e. ". . . reduce the outlet NMOC concentration to **20 parts per million** as hexane by volume, dry basis at 3 percent oxygen, or less." Such guarantee is based on inlet flow rate measurement taken via pitot tube traverses performed in compliance with EPA method 2, and for **exhaust flow rates determined by a carbon balance equation evaluation**. Samples of the inlet and exhaust gases to provide methane and total gaseous non-methane organics constituencies shall be collected in summa canisters, and shall be laboratory evaluated using the TCA/FID analytical technique compliant with EPA method 25C. A GC/FID analyzer shall be employed during source testing for sampling exhaust gas during CEMS testing to provide an "on-line" indication and record of total volatile organic compounds (TVOC's). The calculation to determine the destruction efficiency shall be as follows;

(lb/hr NMOC's IN - lb/hr NMOC's OUT) / lb/hr NMOC's IN . . . where;

lb/hr NMOC's as hexane = (ppm as C_1 NMOC's / 6 / 10^6) x (86 lb/lb-mole / 385.3 dscf/lb-mole) x (dscf / hr)

or;

ppm NMOC's as hexane at 3% Oxygen = (ppm as C_1 NMOC's / 6) x (20.9 - 3) / (20.9 - % Stack O_2)

The system shall be capable of achieving a minimum of **99**% DRE of Total Volatile Organic Compounds (VOC's) (Sum of methane and non-methane organics). Please note that oxidizing combustion systems (such as landfill gas flares) neither generate nor remove sulphur. Any H_2S entering the flare is oxidized to form SOx compounds, but on a molecular basis, sulphur in is equal to sulphur out.
Note also that mineral based particulates, such as wind blown dust or silica, can be entrained into the ambient cooling and quenching air or purge air streams and passed into the combustor. As non-combustible matter, they will be passed into the exhaust stream and will be measure as particulate emissions, but are not generated by the combustion process. PEI makes no guarantees regarding these particulates. Barring individual identification of the particulate matter, it shall be assumed that if the combustor is meeting the above destruction efficiencies, it is evidence that any particulates measured are ambient particles and not generated by the combustion process.

Respectfully,

PERENNIAL ENERGY

Larry H. Conner, VP

DEQ AIR QUALITY PROGRAM
1410 N. Hilton, Boise, ID 83706
For assistance, call the
Air Permit Hotline – 1-877-5PERMIT

Cover Sheet for Air Permit Application – Tier I **Form CSTI**
Revision 5
08/28/08

Please see instructions on page 2 before filling out the form.

COMPANY NAME, FACILITY NAME, AND FACILITY ID NUMBER			
1. Company Name	Southern Idaho Regional Solid Waste District		
2. Facility Name	Milner Butte Landfill	3. Facility ID No.	
4. Brief Project Description - One sentence or less	Initial Tier I Permit Application		

PERMIT APPLICATION TYPE

5. ☒ Initial Tier I ☐ Tier I Administrative Amendment ☐ Tier I Minor Modification ☐ Tier I Significant Modification
☐ Tier I Renewal: Permit No.:_____ Date Issued:_____

FORMS INCLUDED

Included	N/A	Forms		DEQ Verify
☒	☐	Form CSTI – Cover Sheet		☐
☒	☐	Form GI – Facility Information		☐
☒	☐	Form EU0 – Emissions Units General		☐
☐	☒	Form EU1– Industrial Engine Information	Please specify number of EU1s attached: _____	☐
☐	☒	Form EU2– Nonmetallic Mineral Processing Plants	Please specify number of EU2s attached: _____	☐
☐	☒	Form EU3– Spray Paint Booth Information	Please specify number of EU3s attached: _____	☐
☐	☒	Form EU4– Cooling Tower Information	Please specify number of EU4s attached: _____	☐
☐	☒	Form EU5 – Boiler Information	Please specify number of EU5s attached: _____	☐
☐	☒	Form CBP– Concrete Batch Plant	Please Specify number of CBPs attached: _____	☐
☐	☒	Form HMAP – Hot Mix Asphalt Plant	Please specify number of HMAPs attached:	☐
☐	☒	PERF – Portable Equipment Relocation Form		☐
☐	☒	Form BCE– Baghouses Control Equipment		☐
☐	☒	Form SCE– Scrubbers Control Equipment		☐
☐	☒	Form VSCE – Venturi Scrubber Control Equipment		☐
☐	☒	Form ESP – Electrostatic Precipitator		☐
☒	☐	Form AO – Afterburner/Oxidizer		☐
☐	☒	Form CYS – Cyclone Separator		☐
☐	☒	Form CA – Carbon Adsorber		☐
☒	☐	Forms EI-CP1 - EI-CP4– Emissions Inventory– criteria pollutants	(Excel workbook, all 4 worksheets)	☐
☐	☒	Form CAM – Compliance Assurance Monitoring		☐
☒	☐	Form FRA – Federal Regulation Applicability		☐

DEQ AIR QUALITY PROGRAM
1410 N. Hilton, Boise, ID 83706
For assistance, call the
Air Permit Hotline – 1-877-5PERMIT

General Information **Form GI**
Revision 7
2/18/10

Please see instructions on page 2 before filling out the form.

All information is required. If information is missing, the application will not be processed.

IDENTIFICATION

1. Company Name	2. Facility Name:
Southern Idaho Regional Solid Waste District	Milner Butte Landfill

3. Brief Project Description:	Initial Tier I Permit Application

FACILITY INFORMATION

4. Primary Facility Permit Contact Person/Title	Dave Lore		Executive Director	
5. Telephone Number and Email Address	(208) 432-9082		dlore@sisw.org	
6. Alternate Facility Contact Person/Title	Josh Bartlome		Environmental Specialist	
7. Telephone Number and Email Address	(208) 432-9082		jbartlome@sisw.org	
8. Address to Which the Permit Should be Sent	1050 West 400 South			
9. City/County/State/Zip Code	Burley	Cassia	Idaho	83318
10. Equipment Location Address (if different than the mailing address above)				
11. City/County/State/Zip Code				
12. Is the Equipment Portable?	☐ Yes ☒ No			
13. SIC Code(s) and NAICS Code	Primary SIC: 4953	Secondary SIC:	NAICS: 562212	
14. Brief Business Description and Principal Product	Refuse Systems / Solid Waste Landfill			
15. Indentify any adjacent or contiguous facility that this company owns and/or operates	None			
16. Specify the reason for the application	☒ Permit to Construct (PTC) For Tier I permitted facilities only: If you are applying for a PTC then you must also specify how the PTC will be incorporated into the Tier I permit. ☐ Incorporate the PTC at the time of the Tier I renewal ☒ Co-process the Tier I modification and PTC ☐ Administratively amend the Tier I permit to incorporate the PTC upon your request (IDAPA 58.01.01.209.05.a, b, or c) ☒ Tier I Permit ☐ Tier II Permit ☐ Tier II/Permit to Construct			

CERTIFICATION

In accordance with **IDAPA 58.01.01.123 (R**ules for the **C**ontrol of **A**ir **P**ollution in **I**daho**), I** certify based on information and belief formed after reasonable inquiry, the statements and information in the document(s) are true, accurate, and complete.

17. Responsible Official's Name/Title	Dave Lore	Executive Director	
18. Responsible Official's Signature		Date:	

19. ☒ Check here to indicate that you would like to review the draft permit prior to final issuance.

DEQ AIR QUALITY PROGRAM
1410 N. Hilton, Boise, ID 83706
For assistance, call the
Air Permit Hotline – 1-877-5PERMIT

Emissions Unit - General **Form EU0**
Revision 4
08/28/08

Please see instructions on page 2 before filling out the form.

IDENTIFICATION

1. Company Name:	2. Facility Name:	3. Facility ID No:
Southern Idaho Regional Solid Waste District	Milner Butte Landfill	

4. Brief Project Description:	Initial Teir I Permit Application

EMISSIONS UNIT (PROCESS) IDENTIFICATION & DESCRIPTION

5.	Emissions Unit (EU) Name:	LANDFILL
6.	EU ID Number:	01
7.	EU Type:	☐ New Source ☒ Unpermitted Existing Source ☐ Modification to a Permitted Source -- Previous Permit #: Date Issued:
8.	Manufacturer:	CUSTOM DESIGNED
9.	Model:	CUSTOM DESIGNED
10..	Maximum Capacity:	141 ACRES / 19,400,000 CUBIC YARDS
11.	Date of Construction:	1993
12.	Date of Modification (if any):	NONE
13.	Is this a Controlled Emission Unit?	☐ No ☒ Yes If Yes, complete the following section. If No, go to line 22.

EMISSIONS CONTROL EQUIPMENT

14. Control Equipment Name and ID:	Landfill Gas Thermal Oxidizer (Flare) - ID 02		
15. Date of Installation:	Sept 2009	16. Date of Modification (if any):	None
17. Manufacturer and Model Number:	Perennial Energy, Inc Model No. FL114-32-E		
18. ID(s) of Emission Unit Controlled:	01		
19. Is operating schedule different than emission units(s) involved?	☐ Yes ☒ No		
20. Does the manufacturer guarantee the control efficiency of the control equipment?	☒ Yes ☐ No (If Yes, attach and label manufacturer guarantee)		

	Pollutant Controlled					
	PM	PM10	SO_2	NOx	VOC	CO
Control Efficiency						

21. If manufacturer's data is not available, attach a separate sheet of paper to provide the control equipment design specifications and performance data to support the above mentioned control efficiency.

EMISSION UNIT OPERATING SCHEDULE (hours/day, hours/year, or other)

22.	Actual Operation:	24 HOURS/DAY, 365 DAYS/YEAR
23.	Maximum Operation:	24 HOURS/DAY, 365 DAYS/YEAR

REQUESTED LIMITS

24.	Are you requesting any permit limits?	☐ Yes ☒ No (If Yes, indicate all that apply below)
	☐ Operation Hour Limit(s):	
	☐ Production Limit(s):	
	☐ Material Usage Limit(s):	
	☐ Limits Based on Stack Testing:	Please attach all relevant stack testing summary reports
	☐ Other:	
25.	Rationale for Requesting the Limit(s):	

DEQ AIR QUALITY PROGRAM
1410 N. Hilton, Boise, ID 83706
For assistance, call the
Air Permit Hotline – 1-877-5PERMIT

Afterburner/Oxidizer - **Form AO**
Revision 2
08/28/08

Please see instructions on page 3 before filling out the form.

IDENTIFICATION

1. Company Name:	Southern Idaho Regional Solid Waste District	2. Facility Name:	Milner Butte Landfill	3. Facility ID No.:	
4. Brief Project Description:	Initial Tier I Permit Application				

AFTERBURNER/OXIDIZER INFORMATION

Equipment Description

5. Manufacturer:	Perennial Energy, Inc.	6. Model Number:	FL-114-32-E

7. Type	☐ Catalytic oxidizer ☐ Recuperative oxidizer ☒ Thermal (direct fired) oxidizer ☐ Regenerative thermal oxidizer (RTO) Number of chambers: Is a rotoconcentrator for VOC part of the design? ☐ Yes ☒ No	Media type for regenerative oxidizer: ☐ Saddles ☐ Monolith ☐ Other: For recuperative oxidizer, type of heat exchanger: ☐ Shell and tube ☐ Plate ☐ Other:
8. Type of Burner	☒ Gas fired Btu rating: 45 MMBTU/hr ☐ Electric KW rating: ☐ Oil fired Btu rating:	Blower scfm: 1500 Blower hp: 60 Manufacturer's emission guarantee for burners for: NOx: <20 ppm @0 % O_2 (raw ppm @ 15% stack O2) CO: <100 ppm @ 0 % O_2
9. Design Criteria	Retention time at normal operating temperature: 0.6 seconds at 1400 degrees F Combustion chamber volume: 1532 cubic feet (ft^3) (above burner surface) Design gas flow: 1500 scfm LFG @ 50% CH4	
10. Pre-Treatment	Is a pre-treatment device for particulate removal present? ☐ Yes ☒ No If yes, indicate type: ☐ Cyclone ☐ Precooler ☐ Preheater ☐ Knock-out chamber ☐ Baghouse ☐ Other:	
11. Auxiliary Fuel Data	Auxiliary fuel available? ☒ Yes ☐ No If yes, indicate type:Propane	Fuel usage (check one): Maximum Minimum Average ☒ Cubic feet (ft^3)/hour As needed to start system ☐ Gallons/hour
12. For Catalytic Oxidizer	Catalyst manufacturer:	
	Type of catalyst: ☐ Low temperature catalyst ☐ Commercial noble metal ☐ Other: Estimated catalyst life: years Catalyst cleaning frequency: months Method of cleaning:	Does the process emit any of the following potential catalyst masking agents or deactivators? ☐ Yes (if yes, check type[s] below) ☐ No ☐ Halogen ☐ Heavy metal ☐ Silicone ☐ Sulfur compounds ☐ Phosphorus compound ☐ Particulate matter
13. Process Blower	Blower: 60 hp Design flow rate: 1500 scfm Draft: ☐ Forced ☐ Induced	

Process Stream Characteristics

14. Brief Description of Process

Landfill gas generated by decomposing waste is collected with horizontal and vertical gas collection wells. The gas collection wells are under vacuum which transports the gas to the blower/flare station through a network of lateral and header piping. Once the landfill gas reaches the blower/flare station it flows through a demister/filter capable of 99.9% effciency removal for moisture particles and soild particles having a specific gravity equal to, or greater than, water and size greater than or equal to 6 micron prior to entering the blowers.

The landfill gas is compressed by the extraction blowers to approximately +20 inches of water column pressure and is supplied to the oxidixing flare system for its supervised and temperature controlled combustion process. The burner system is a primary air mixed type, with up to 60% of the theoretical stoichiometric air induced at the bottom of each individual burner port, and the total air volume required (primary, secondary, and quenching) air is controlled via an automatically actuated temperature controlled air inlet louver system.

Please see attached process flow diagram and engineering drawings of the system.

15. Emission Data

Air contaminant	Concentration ppmv	Destruction efficiency %
See attached emissions inventory		

16. Instrumentation Data

Temperature Gauges - 4 - Winters Bi-Metal Thermometer

Pressure Gauge - 1 - McMaster-CARR Low Pressure Steel Case Diaphragm Gauge

Pressure Gauges - 4 - Dwyer Capsuhelic Series 4000 Differential Pressure Gauges

Flow Meter - 1 - Veris Verabar V100 Differential Pressure Flow Sensor

Digital Chart Recorder - 1 - Yokogawa FX106 Digital Chart Recorder (Records Flare Temperature & Landfill Gas Flow Rate)

Thermocouples - 3 - Pyromation Inc. K-type Thermocouples

Flame Sensor - 1 - Honeywell C7061F Dynamic Self Check Ultraviolet Flame Detector

17. Bakeout Process

Is bakeout a feature of the process? ☐ Yes ☒ No

18. Operating Conditions

	Maximum	Minimum	Average
Operating temperature (degrees F):	1600	1300	1400
Exit gas temperature (degrees F):	1200	900	1000
Pressure inches (H_2O):	8	1	3

	Moisture content (%):	8	6	7
	Gas volume (scfm):	22576	2258	dependant upon flow rate to flare
	Gas velocity (duct-ft/min):	1150	115	dependant upon flow rate to flare
19. Operating Schedule	Normal: 24 hours/day 7 days/week 52 weeks/year Maximum: 24 hours/day 7 days/week 52 weeks/year			

DEQ AIR QUALITY PROGRAM
1410 N. Hilton, Boise, ID 83706
For assistance, call the
Air Permit Hotline - 1-877-5PERMIT

PERMIT TO CONSTRUCT APPLICATION
Revision 3
4/5/2007

Please see instructions on page 2 before filling out the form.

Company Name:	**Southern Idaho Regional Solid Waste District**
Facility Name:	Milner Butte Landfill
Facility ID No.:	
Brief Project Description:	Initial Tier I Permit Application

SUMMARY OF FACILITY WIDE EMISSION RATES FOR CRITERIA POLLUTANTS - POINT SOURCES

1.	2.	3.											
		PM_{10}		SO_2		NO_x		CO		VOC		Lead	
Emissions units	**Stack ID**	**lb/hr**	**T/yr**	**lb/hr**	**T/yr**	**lb/hr**	**T/yr**	**lb/hr**	**T/yr**	**lb/hr**	**T/yr**	**lb/hr**	**T/yr**
Point Source(s)													
LFG Flare	2.00	0.75	3.29	2.25	9.84	2.70	11.83	9.00	39.42	0.19	0.83		
name of the emissions unit2													
name of the emissions unit3													
name of the emissions unit4													
name of the emissions unit5													
name of the emissions unit6													
name of the emissions unit7													
name of the emissions unit8													
name of the emissions unit9													
name of the emissions unit10													
name of the emissions unit11													
name of the emissions unit12													
name of the emissions unit13													
name of the emissions unit14													
name of the emissions unit15													
name of the emissions unit16													
name of the emissions unit17													
name of the emissions unit18													
name of the emissions unit19													
name of the emissions unit20													
name of the emissions unit21													
(insert more rows as needed)													
Total		0.75	3.29	2.25	9.84	2.70	11.83	9.00	39.42	0.19	0.83		

DEQ AIR QUALITY PROGRAM
1410 N. Hilton, Boise, ID 83706
For assistance, call the
Air Permit Hotline - 1-877-5PERMIT

PERMIT TO CONSTRUCT APPLICATION
Revision 2
4/5/2007

Please see instructions on page 2 before filling out the form.

Company Name:	**Southern Idaho Regional Solid Waste District**
Facility Name:	Milner Butte Landfill
Facility ID No.:	
Brief Project Description:	Initial Tier I Permit Application

SUMMARY OF FACILITY WIDE EMISSION RATES FOR CRITERIA POLLUTANTS - FUGITIVE SOURCES

1.	2.	3.											
		PM_{10}		SO_2		NO_x		CO		VOC		Lead	
Fugitive Source Name	**Fugitive ID**	**lb/hr**	**T/yr**	**lb/hr**	**T/yr**	**lb/hr**	**T/yr**	**lb/hr**	**T/yr**	**lb/hr**	**T/yr**	**lb/hr**	**T/yr**
Fugitive Source(s)													
Landfill	1.00									1.42	6.20		
Fugitive Dust (Wind Erosion)	3.00	0.27	1.17										
Fugitive Dust (Paved Roads)	4.00	0.10	0.43										
Fugitive Dust (Unpaved Roads)	5.00	1.24	5.43										
name of fugitive source5													
name of fugitive source6													
name of fugitive source7													
name of fugitive source8													
name of fugitive source9													
name of fugitive source10													
name of fugitive source11													
name of fugitive source12													
name of fugitive source13													
name of fugitive source14													
name of fugitive source15													
name of fugitive source16													
name of fugitive source17													
name of fugitive source18													
name of fugitive source19													
name of fugitive source20													
name of fugitive source21													
(insert more rows as needed)													
Total		1.60	7.02							1.42	6.20		

DEQ AIR QUALITY PROGRAM
1410 N. Hilton, Boise, ID 83706
For assistance, call the
Air Permit Hotline - 1-877-5PERMIT

PERMIT TO CONSTRUCT APPLICATION
Revision 3
4/5/2007

Please see instructions on page 2 before filling out the form.

Company Name:	**Southern Idaho Regional Solid Waste District**
Facility Name:	Milner Butte Landfill
Facility ID No.:	
Brief Project Description:	Initial Tier I Permit Application

SUMMARY OF EMISSIONS INCREASE (PROPOSED PTE - PREVIOUSLY MODELED PTE) - POINT SOURCES

1.	2.	3.											
		PM_{10}		SO_2		NO_x		CO		VOC		Lead	
Emissions units	Stack ID	lb/hr	T/yr	lb/hr	T/yr	lb/hr	T/yr	lb/hr	T/yr	lb/hr	T/yr	lb/hr	T/yr
Point Source(s)													
name of the emissions unit1													
name of the emissions unit2													
name of the emissions unit3													
name of the emissions unit4													
name of the emissions unit5													
name of the emissions unit6													
name of the emissions unit7													
name of the emissions unit8													
name of the emissions unit9													
name of the emissions unit10													
name of the emissions unit11													
name of the emissions unit12													
name of the emissions unit13													
name of the emissions unit14													
name of the emissions unit15													
name of the emissions unit16													
name of the emissions unit17													
name of the emissions unit18													
name of the emissions unit19													
name of the emissions unit20													
name of the emissions unit21													
(insert more rows as needed)													
Total													

DEQ AIR QUALITY PROGRAM
1410 N. Hilton, Boise, ID 83706
For assistance, call the
Air Permit Hotline - 1-877-5PERMIT

PERMIT TO CONSTRUCT APPLICATION
Revision 3
4/5/2007

Please see instructions on page 2 before filling out the form.

Company Name:	**Southern Idaho Regional Solid Waste District**
Facility Name:	Milner Butte Landfill
Facility ID No.:	
Brief Project Description:	Initial Tier I Permit Application

SUMMARY OF EMISSIONS INCREASE (PROPOSED PTE - PREVIOUSLY MODELED PTE) - FUGITIVE SOURCES

1.	2.	3. Air Pollutant Maximum Change in Emissions Rate (lbs/hr or t/yr)											
		PM_{10}		SO_2		NO_X		CO		VOC		Lead	
Fugitive Source Name	**Fugitive ID**	**lb/hr**	**T/yr**	**lb/hr**	**T/yr**	**lb/hr**	**T/yr**	**lb/hr**	**T/yr**	**lb/hr**	**T/yr**	**lb/hr**	**T/yr**
Fugitive Source(s)													
name of fugitive source1													
name of fugitive source2													
name of fugitive source3													
name of fugitive source4													
name of fugitive source5													
name of fugitive source6													
name of fugitive source7													
name of fugitive source8													
name of fugitive source9													
name of fugitive source10													
name of fugitive source11													
name of fugitive source12													
name of fugitive source13													
name of fugitive source14													
name of fugitive source15													
name of fugitive source16													
name of fugitive source17													
name of fugitive source18													
name of fugitive source19													
name of fugitive source20													
name of fugitive source21													
(insert more rows as needed)													
Total													

DEQ AIR QUALITY PROGRAM
1410 N. Hilton, Boise, ID 83706
For assistance, call the
Air Permit Hotline – 1-877-5PERMIT

AIR PERMIT APPLICATION

Revision 6
10/7/09

For each box in the table below, CTRL+click on the blue underlined text for instructions and information.

IDENTIFICATION	
1. Company Name:	2. Facility Name:
Southern Idaho Regional Solid Waste District	Milner Butte Landfill
3. Brief Project Description:	Initial Teir I Permit Application

APPLICABILITY DETERMINATION	
4. List applicable subparts of the New Source Performance Standards (NSPS) (40 CFR part 60). Examples of NSPS affected emissions units include internal combustion engines, boilers, turbines, etc. The applicant must thoroughly review the list of affected emissions units.	List of applicable subpart(s): 40 CFR Part 60, Subpart A – NSPS General Provisions 40 CFR Part 60, Subpart WWW – NSPS Landfills ☐ Not Applicable
5. List applicable subpart(s) of the National Emission Standards for Hazardous Air Pollutants (NESHAP) found in 40 CFR part 61 and 40 CFR part 63. Examples of affected emission units include solvent cleaning operations, industrial cooling towers, paint stripping and miscellaneous surface coating. EPA has a web page dedicated to NESHAP that should be useful to applicants.	List of applicable subpart(s): 40 CFR Part 61, Subpart A – HAP's General Provisions 40 CFR Part 61, Subpart M – NESHAP Asbestos 40 CFR Part 63, Subpart A – NESHAP General Provisions 40 CFR Part 63, Subpart AAAA – NESHAP Landfills ☐ Not Applicable
6. For each subpart identified above, conduct a complete a regulatory analysis using the instructions and referencing the example provided on the following pages. **Note** - Regulatory reviews must be submitted with sufficient detail so that DEQ can verify applicability and document in legal terms why the regulation applies. Regulatory reviews that are submitted with insufficient detail will be determined incomplete.	☑ A detailed regulatory review is provided (Follow instructions and example). ☐ DEQ has already been provided a detailed regulatory review. Give a reference to the document including the date.

IF YOU ARE UNSURE HOW TO ANSWER ANY OF THESE QUESTIONS, CALL THE AIR PERMIT HOTLINE AT 1-877-5PERMIT

It is emphasized that it is the applicant's responsibility to satisfy all technical and regulatory requirements, and that DEQ will help the applicant understand what those requirements are prior to the application being submitted but that DEQ will not perform the required technical or regulatory analysis on the applicant's behalf.

[Code of Federal Regulations]
[Title 40, Volume 6]
[Revised as of July 1, 2009]
From the U.S. Government Printing Office via GPO Access
[CITE: 40CFR60]

TITLE 40--PROTECTION OF ENVIRONMENT

CHAPTER I--ENVIRONMENTAL PROTECTION AGENCY (CONTINUED)

PART 60_STANDARDS OF PERFORMANCE FOR NEW STATIONARY SOURCES--
Table of Contents

Subpart WWW_Standards of Performance for Municipal Solid Waste Landfills

Source: 61 FR 9919, Mar. 12, 1996, unless otherwise noted.

Sec. 60.750 Applicability, designation of affected facility, and delegation of authority.

(a) The provisions of this subpart apply to each municipal solid waste landfill that commenced construction, reconstruction or modification on or after May 30, 1991. Physical or operational changes made to an existing MSW landfill solely to comply with subpart Cc of this part are not considered construction, reconstruction, or modification for the purposes of this section.

The Milner Butte Landfill has commenced construction after May 30, 1991.

(b) The following authorities shall be retained by the Administrator and not transferred to the State: Sec. 60.754(a)(5).
(c) Activities required by or conducted pursuant to a CERCLA, RCRA, or State remedial action are not considered construction, reconstruction, or modification for purposes of this subpart.

[61 FR 9919, Mar. 12, 1996, as amended at 63 FR 32750, June 16, 1998]

The Milner Butte Landfill acknowledges the above retained authorities that activities required by CERCLA, RCRA, or State remedial actions are not considered construction, reconstruction, or modification for the purposes of this subpart.

Sec. 60.751 Definitions.

As used in this subpart, all terms not defined herein shall have the meaning given them in the Act or in subpart A of this part.
Active collection system means a gas collection system that uses gas mover equipment.
Active landfill means a landfill in which solid waste is being placed or a landfill that is planned to accept waste in the future.
Closed landfill means a landfill in which solid waste is no longer being placed, and in which no additional solid wastes will be placed without first filing a notification of modification as prescribed under Sec. 60.7(a)(4). Once a notification of modification has been filed, and additional solid waste is placed in the landfill, the landfill is no longer closed.
Closure means that point in time when a landfill becomes a closed landfill.

Commercial solid waste means all types of solid waste generated by stores, offices, restaurants, warehouses, and other nonmanufacturing activities, excluding residential and industrial wastes.

Controlled landfill means any landfill at which collection and control systems are required under this subpart as a result of the nonmethane organic compounds emission rate. The landfill is considered controlled at the time a collection and control system design plan is submitted in compliance with Sec. 60.752(b)(2)(i).

Design capacity means the maximum amount of solid waste a landfill can accept, as indicated in terms of volume or mass in the most recent permit issued by the State, local, or Tribal agency responsible for regulating the landfill, plus any in-place waste not accounted for in the most recent permit. If the owner or operator chooses to convert the design capacity from volume to mass or from mass to volume to demonstrate its design capacity is less than 2.5 million megagrams or 2.5 million cubic meters, the calculation must include a site specific density, which must be recalculated annually.

Disposal facility means all contiguous land and structures, other appurtenances, and improvements on the land used for the disposal of solid waste.

Emission rate cutoff means the threshold annual emission rate to which a landfill compares its estimated emission rate to determine if control under the regulation is required.

Enclosed combustor means an enclosed firebox which maintains a relatively constant limited peak temperature generally using a limited supply of combustion air. An enclosed flare is considered an enclosed combustor.

Flare means an open combustor without enclosure or shroud.

Gas mover equipment means the equipment (i.e., fan, blower, compressor) used to transport landfill gas through the header system.

Household waste means any solid waste (including garbage, trash, and sanitary waste in septic tanks) derived from households (including, but not limited to, single and multiple residences, hotels and motels, bunkhouses, ranger stations, crew quarters, campgrounds, picnic grounds, and day-use recreation areas).

Industrial solid waste means solid waste generated by manufacturing or industrial processes that is not a hazardous waste regulated under Subtitle C of the Resource Conservation and Recovery Act, parts 264 and 265 of this title. Such waste may include, but is not limited to, waste resulting from the following manufacturing processes: electric power generation; fertilizer/agricultural chemicals; food and related products/by-products; inorganic chemicals; iron and steel manufacturing; leather and leather products; nonferrous metals manufacturing/foundries; organic chemicals; plastics and resins manufacturing; pulp and paper industry; rubber and miscellaneous plastic products; stone, glass, clay, and concrete products; textile manufacturing; transportation equipment; and water treatment. This term does not include mining waste or oil and gas waste.

Interior well means any well or similar collection component located inside the perimeter of the landfill waste. A perimeter well located outside the landfilled waste is not an interior well.

Landfill means an area of land or an excavation in which wastes are placed for permanent disposal, and that is not a land application unit, surface impoundment, injection well, or waste pile as those terms are defined under Sec. 257.2 of this title.

Lateral expansion means a horizontal expansion of the waste boundaries of an existing MSW landfill. A lateral expansion is not a modification unless it results in an increase in the design capacity of the landfill.

Modification means an increase in the permitted volume design capacity of the landfill by either horizontal or vertical expansion based on its

permitted design capacity as of May 30, 1991. Modification does not occur until the owner or operator commences construction on the horizontal or vertical expansion.

Municipal solid waste landfill or MSW landfill means an entire disposal facility in a contiguous geographical space where household waste is placed in or on land. An MSW landfill may also receive other types of RCRA Subtitle D wastes (Sec. 257.2 of this title) such as commercial solid waste, nonhazardous sludge, conditionally exempt small quantity generator waste, and industrial solid waste. Portions of an MSW landfill may be separated by access roads. An MSW landfill may be publicly or privately owned. An MSW landfill may be a new MSW landfill, an existing MSW landfill, or a lateral expansion.

Municipal solid waste landfill emissions or MSW landfill emissions means gas generated by the decomposition of organic waste deposited in an MSW landfill or derived from the evolution of organic compounds in the waste.

NMOC means nonmethane organic compounds, as measured according to the provisions of Sec. 60.754.

Nondegradable waste means any waste that does not decompose through chemical breakdown or microbiological activity. Examples are, but are not limited to, concrete, municipal waste combustor ash, and metals.

Passive collection system means a gas collection system that solely uses positive pressure within the landfill to move the gas rather than using gas mover equipment.

Sludge means any solid, semisolid, or liquid waste generated from a municipal, commercial, or industrial wastewater treatment plant, water supply treatment plant, or air pollution control facility, exclusive of the treated effluent from a wastewater treatment plant.

Solid waste means any garbage, sludge from a wastewater treatment plant, water supply treatment plant, or air pollution control facility and other discarded material, including solid, liquid, semisolid, or contained gaseous material resulting from industrial, commercial, mining, and agricultural operations, and from community activities, but does not include solid or dissolved material in domestic sewage, or solid or dissolved materials in irrigation return flows or industrial discharges that are point sources subject to permits under 33 U.S.C. 1342, or source, special nuclear, or by-product material as defined by the Atomic Energy Act of 1954, as amended (42 U.S.C 2011 et seq.).

Sufficient density means any number, spacing, and combination of collection system components, including vertical wells, horizontal collectors, and surface collectors, necessary to maintain emission and migration control as determined by measures of performance set forth in this part.

Sufficient extraction rate means a rate sufficient to maintain a negative pressure at all wellheads in the collection system without causing air infiltration, including any wellheads connected to the system as a result of expansion or excess surface emissions, for the life of the blower.

The Milner Butte Landfill acknowledges the definitions.

[61 FR 9919, Mar. 12, 1996, as amended at 63 FR 32750, June 16, 1998; 64 FR 9262, Feb. 24, 1999]

Sec. 60.752 Standards for air emissions from municipal solid waste landfills.

(a) Each owner or operator of an MSW landfill having a design capacity less than 2.5 million megagrams by mass or 2.5 million cubic meters by volume shall submit an initial design capacity report to the Administrator as provided in Sec. 60.757(a). The landfill may calculate design capacity in either megagrams or cubic meters for comparison with the exemption values. Any density conversions shall be documented and submitted with the report. Submittal of the initial design capacity report shall fulfill the requirements of this subpart except as provided for in paragraphs (a)(1) and (a)(2) of this section.

(1) The owner or operator shall submit to the Administrator an amended design capacity report, as provided for in Sec. 60.757(a)(3).

(2) When an increase in the maximum design capacity of a landfill exempted from the provisions of Sec. 60.752(b) through Sec. 60.759 of this subpart on the basis of the design capacity exemption in paragraph (a) of this section results in a revised maximum design capacity equal to or greater than 2.5 million megagrams and 2.5 million cubic meters, the owner or operator shall comply with the provision of paragraph (b) of this section.

The Milner Butte Landfill has a design capacity greater than 2.5 million megagrams and 2.5 million cubic meters.

(b) Each owner or operator of an MSW landfill having a design capacity equal to or greater than 2.5 million megagrams and 2.5 million cubic meters, shall either comply with paragraph (b)(2) of this section or calculate an NMOC emission rate for the landfill using the procedures specified in Sec. 60.754. The NMOC emission rate shall be recalculated annually, except as provided in Sec. 60.757(b)(1)(ii) of this subpart. The owner or operator of an MSW landfill subject to this subpart with a design capacity greater than or equal to 2.5 million megagrams and 2.5 million cubic meters is subject to part 70 or 71 permitting requirements.

The Milner Butte Landfill has a design capacity greater than 2.5 million megagrams and 2.5 million cubic meters.

(1) If the calculated NMOC emission rate is less than 50 megagrams per year, the owner or operator shall:

(i) Submit an annual emission report to the Administrator, except as provided for in Sec. 60.757(b)(1)(ii); and

(ii) Recalculate the NMOC emission rate annually using the procedures specified in Sec. 60.754(a)(1) until such time as the calculated NMOC emission rate is equal to or greater than 50 megagrams per year, or the landfill is closed.

(A) If the NMOC emission rate, upon recalculation required in paragraph (b)(1)(ii) of this section, is equal to or greater than 50 megagrams per year, the owner or operator shall install a collection and control system in compliance with paragraph (b)(2) of this section.

The Milner Butte Landfill has a calculated NMOC emission rate greater than 50 megagrams.

(B) If the landfill is permanently closed, a closure notification shall be submitted to the Administrator as provided for in Sec. 60.757(d).

The Milner Butte Landfill is not permanently closed.

(2) If the calculated NMOC emission rate is equal to or greater than 50 megagrams per year, the owner or operator shall:

(i) Submit a collection and control system design plan prepared by a professional engineer to the Administrator within 1 year:
(A) The collection and control system as described in the plan shall meet the design requirements of paragraph (b)(2)(ii) of this section.
(B) The collection and control system design plan shall include any alternatives to the operational standards, test methods, procedures, compliance measures, monitoring, recordkeeping or reporting provisions of Sec. Sec. 60.753 through 60.758 proposed by the owner or operator.
(C) The collection and control system design plan shall either conform with specifications for active collection systems in Sec. 60.759 or include a demonstration to the Administrator's satisfaction of the sufficiency of the alternative provisions to Sec. 60.759.

The Milner Butte Landfill has a calculated NMOC emission rate greater than 50 megagrams and has submitted a collection and control system design plan prepared by a professional engineer to the Administrator within 1 year from exceeding the 50 megagrams NMOC threshold. The control system design plan addresses (A), (B) and (C) above.

(D) The Administrator shall review the information submitted under paragraphs (b)(2)(i) (A),(B) and (C) of this section and either approve it, disapprove it, or request that additional information be submitted. Because of the many site-specific factors involved with landfill gas system design, alternative systems may be necessary. A wide variety of system designs are possible, such as vertical wells, combination horizontal and vertical collection systems, or horizontal trenches only, leachate collection components, and passive systems.

The Milner Butte Landfill acknowledges the need for Administrator review of the collection and control system design plan.

(ii) Install a collection and control system that captures the gas generated within the landfill as required by paragraphs (b)(2)(ii)(A) or (B) and (b)(2)(iii) of this section within 30 months after the first annual report in which the emission rate equals or exceeds 50 megagrams per year, unless Tier 2 or Tier 3 sampling demonstrates that the emission rate is less than 50 megagrams per year, as specified in Sec. 60.757(c)(1) or (2).

The Milner Butte Landfill has installed a collection and control system as required by paragraphs (b)(2)(ii)(A) of this section within 30 months after the NMOC emission rate exceeded 50 megagrams per year.

(A) An active collection system shall:
(1) Be designed to handle the maximum expected gas flow rate from the entire area of the landfill that warrants control over the intended use period of the gas control or treatment system equipment;
(2) Collect gas from each area, cell, or group of cells in the landfill in which the initial solid waste has been placed for a period of:
(i) 5 years or more if active; or
(ii) 2 years or more if closed or at final grade.
(3) Collect gas at a sufficient extraction rate;
(4) Be designed to minimize off-site migration of subsurface gas.

The Milner Butte Landfill has installed an active collection system in accordance with the above.

(B) A passive collection system shall:

(1) Comply with the provisions specified in paragraphs (b)(2)(ii)(A)(1), (2), and (2)(ii)(A)(4) of this section.
(2) Be installed with liners on the bottom and all sides in all areas in which gas is to be collected. The liners shall be installed as required under Sec. 258.40.

The Milner Butte Landfill is not utilizing a passive collection system.

(iii) Route all the collected gas to a control system that complies with the requirements in either paragraph (b)(2)(iii) (A), (B) or (C) of this section.
(A) An open flare designed and operated in accordance with Sec. 60.18 except as noted in Sec. 60.754(e);
(B) A control system designed and operated to reduce NMOC by 98 weight-percent, or, when an enclosed combustion device is used for control, to either reduce NMOC by 98 weight percent or reduce the outlet NMOC concentration to less than 20 parts per million by volume, dry basis as hexane at 3 percent oxygen. The reduction efficiency or parts per million by volume shall be established by an initial performance test to be completed no later than 180 days after the initial startup of the approved control system using the test methods specified in Sec. 60.754(d).

The Milner Butte Landfill routes all collected gas to a control system that complies with (b)(2)(iii)(B).

(1) If a boiler or process heater is used as the control device, the landfill gas stream shall be introduced into the flame zone.

The Milner Butte Landfill routes all collected gas to a control system that complies with (b)(2)(iii)(B).

(2) The control device shall be operated within the parameter ranges established during the initial or most recent performance test. The operating parameters to be monitored are specified in Sec. 60.756;

The Milner Butte Landfill will operate the control device in accordance with the parameter ranges established during the initial or most recent performance test.

(C) Route the collected gas to a treatment system that processes the collected gas for subsequent sale or use. All emissions from any atmospheric vent from the gas treatment system shall be subject to the requirements of paragraph (b)(2)(iii) (A) or (B) of this section.

The Milner Butte Landfill routes all collected gas to a control system that complies with (b)(2)(iii)(B).

(iv) Operate the collection and control device installed to comply with this subpart in accordance with the provisions of Sec. 60.753, 60.755 and 60.756.

The Milner Butte Landfill will operate the collection and control device to comply with this subpart in accordance with the provisions of Sec. 60.753, 60.755 and 60.756.

(v) The collection and control system may be capped or removed provided that all the conditions of paragraphs (b)(2)(v) (A), (B), and (C) of this section are met:
(A) The landfill shall be a closed landfill as defined in Sec. 60.751 of this subpart. A closure report shall be submitted to the Administrator as provided in Sec. 60.757(d);
(B) The collection and control system shall have been in operation a minimum of 15 years; and
(C) Following the procedures specified in Sec. 60.754(b) of this subpart, the calculated NMOC gas produced by the landfill shall be less than 50 megagrams per year on three successive test dates. The test dates shall be no less than 90 days apart, and no more than 180 days apart.

The Milner Butte Landfill acknowledges when the control system may be capped or removed.

(c) For purposes of obtaining an operating permit under title V of the Act, the owner or operator of a MSW landfill subject to this subpart with a design capacity less than 2.5 million megagrams or 2.5 million cubic meters is not subject to the requirement to obtain an operating permit for the landfill under part 70 or 71 of this chapter, unless the landfill is otherwise subject to either part 70 or 71. For purposes of submitting a timely application for an operating permit under part 70 or 71, the owner or operator of a MSW landfill subject to this subpart with a design capacity greater than or equal to 2.5 million megagrams and 2.5 million cubic meters, and not otherwise subject to either part 70 or 71, becomes subject to the requirements of Sec. Sec. 70.5(a)(1)(i) or 71.5(a)(1)(i) of this chapter, regardless of when the design capacity report is actually submitted, no later than:
(1) June 10, 1996 for MSW landfills that commenced construction, modification, or reconstruction on or after May 30, 1991 but before March 12, 1996;
(2) Ninety days after the date of commenced construction, modification, or reconstruction for MSW landfills that commence construction, modification, or reconstruction on or after March 12, 1996.
(d) When a MSW landfill subject to this subpart is closed, the owner or operator is no longer subject to the requirement to maintain an operating permit under part 70 or 71 of this chapter for the landfill if the landfill is not otherwise subject to the requirements of either part 70 or 71 and if either of the following conditions are met:
(1) The landfill was never subject to the requirement for a control system under paragraph (b)(2) of this section; or
(2) The owner or operator meets the conditions for control system removal specified in paragraph (b)(2)(v) of this section.

The Milner Butte Landfill has a design capacity greater than 2.5 million megagrams and 2.5 million cubic meters, was not otherwise subject to either 40 CFR Part 70 or Part 71 and commenced construction after May 30, 1991 but before March 12, 1996.

[61 FR 9919, Mar. 12, 1996, as amended at 63 FR 32751, June 16, 1998; 65 FR 18908, Apr. 10, 2000; 71 FR 55127, Sept. 21, 2006]

Sec. 60.753 Operational standards for collection and control systems.

Each owner or operator of an MSW landfill with a gas collection and control system used to comply with the provisions of Sec. 60.752(b)(2)(ii) of this subpart shall:

(a) Operate the collection system such that gas is collected from each area, cell, or group of cells in the MSW landfill in which solid waste has been in place for:
(1) 5 years or more if active; or
(2) 2 years or more if closed or at final grade;
(b) Operate the collection system with negative pressure at each wellhead except under the following conditions:
(1) A fire or increased well temperature. The owner or operator shall record instances when positive pressure occurs in efforts to avoid a fire. These records shall be submitted with the annual reports as provided in Sec. 60.757(f)(1);
(2) Use of a geomembrane or synthetic cover. The owner or operator shall develop acceptable pressure limits in the design plan;
(3) A decommissioned well. A well may experience a static positive pressure after shut down to accommodate for declining flows. All design changes shall be approved by the Administrator;
(c) Operate each interior wellhead in the collection system with a landfill gas temperature less than 55 [deg]C and with either a nitrogen level less than 20 percent or an oxygen level less than 5 percent. The owner or operator may establish a higher operating temperature, nitrogen, or oxygen value at a particular well. A higher operating value demonstration shall show supporting data that the elevated parameter does not cause fires or significantly inhibit anaerobic decomposition by killing methanogens.
(1) The nitrogen level shall be determined using Method 3C, unless an alternative test method is established as allowed by Sec. 60.752(b)(2)(i) of this subpart.
(2) Unless an alternative test method is established as allowed by Sec. 60.752(b)(2)(i) of this subpart, the oxygen shall be determined by an oxygen meter using Method 3A or 3C except that:
(i) The span shall be set so that the regulatory limit is between 20 and 50 percent of the span;
(ii) A data recorder is not required;
(iii) Only two calibration gases are required, a zero and span, and ambient air may be used as the span;
(iv) A calibration error check is not required;
(v) The allowable sample bias, zero drift, and calibration drift are <plus-minus<ls-thn-eq>10 percent.
(d) Operate the collection system so that the methane concentration is less than 500 parts per million above background at the surface of the landfill. To determine if this level is exceeded, the owner or operator shall conduct surface testing around the perimeter of the collection area and along a pattern that traverses the landfill at 30 meter intervals and where visual observations indicate elevated concentrations of landfill gas, such as distressed vegetation and cracks or seeps in the cover. The owner or operator may establish an alternative traversing pattern that ensures equivalent coverage. A surface monitoring design plan shall be developed that includes a topographical map with the monitoring route and the rationale for any site-specific deviations from the 30 meter intervals. Areas with steep slopes or other dangerous areas may be excluded from the surface testing.
(e) Operate the system such that all collected gases are vented to a control system designed and operated in compliance with Sec. 60.752(b)(2)(iii). In the event the collection or control system is inoperable, the gas mover system shall be shut down and all valves in the collection and control system contributing to venting of the gas to the atmosphere shall be closed within 1 hour; and
(f) Operate the control or treatment system at all times when the collected gas is routed to the system.

(g) If monitoring demonstrates that the operational requirements in paragraphs (b), (c), or (d) of this section are not met, corrective action shall be taken as specified in Sec. 60.755(a)(3) through (5) or Sec. 60.755(c) of this subpart. If corrective actions are taken as specified in Sec. 60.755, the monitored exceedance is not a violation of the operational requirements in this section.

The Milner Butte Landfill acknowledges the operational standards for collection and control systems stated above and will comply with the operational standards.

[61 FR 9919, Mar. 12, 1996, as amended at 63 FR 32751, June 16, 1998; 65 FR 61778, Oct. 17, 2000]

Sec. 60.754 Test methods and procedures.

(a)(1) The landfill owner or operator shall calculate the NMOC emission rate using either the equation provided in paragraph (a)(1)(i) of this section or the equation provided in paragraph (a)(1)(ii) of this section. Both equations may be used if the actual year-to-year solid waste acceptance rate is known, as specified in paragraph (a)(1)(i), for part of the life of the landfill and the actual year-to-year solid waste acceptance rate is unknown, as specified in paragraph (a)(1)(ii), for part of the life of the landfill. The values to be used in both equations are 0.05 per year for k, 170 cubic meters per megagram for L<INF>O</INF>, and 4,000 parts per million by volume as hexane for the C<INF>NMOC</INF>. For landfills located in geographical areas with a thirty year annual average precipitation of less than 25 inches, as measured at the nearest representative official meteorologic site, the k value to be used is 0.02 per year.

(i) The following equation shall be used if the actual year-to-year solid waste acceptance rate is known.

$$M_{NMOC} = \sum_{i=1}^{n} 2\,k\,L_o M_i \left(e^{-kt_i}\right)\left(C_{NMOC}\right)\left(3.6\times10^{-9}\right)$$

where,

M_{NMOC}=Total NMOC emission rate from the landfill, megagrams per year
k=methane generation rate constant, $year^{-1}$
L_o=methane generation potential, cubic meters per megagram solid waste
M_i=mass of solid waste in the ith section, megagrams
t_i=age of the ith section, years
C_{NMOC}=concentration of NMOC, parts per million by volume as hexane
3.6×10^{-9}=conversion factor

The mass of nondegradable solid waste may be subtracted from the total mass of solid waste in a particular section of the landfill when calculating the value for M<INF>i</INF> if documentation of the nature and amount of such wastes is maintained

(ii) The following equation shall be used if the actual year-to-year solid waste acceptance rate is unknown.

$$M_{NMOC} = 2L_oR\,(e^{-kc} - e^{-kt})\,C_{NMOC}(3.6 \times 10^{-9})$$

Where:

M_{NMOC}=mass emission rate of NMOC, megagrams per year
L_o=methane generation potential, cubic meters per megagram solid waste
R=average annual acceptance rate, megagrams per year
k=methane generation rate constant, $year^{-1}$
t = age of landfill, years
C_{NMOC}=concentration of NMOC, parts per million by volume as hexane
c=time since closure, years; for active landfill c=O and $e^{-kc}1$
3.6x10-9=conversion factor

The mass of nondegradable solid waste may be subtracted from the total mass of solid waste in a particular section of the landfill when calculating the value of R, if documentation of the nature and amount of such wastes is maintained.

(2) Tier 1. The owner or operator shall compare the calculated NMOC mass emission rate to the standard of 50 megagrams per year.

(i) If the NMOC emission rate calculated in paragraph (a)(1) of this section is less than 50 megagrams per year, then the landfill owner shall submit an emission rate report as provided in Sec. 60.757(b)(1), and shall recalculate the NMOC mass emission rate annually as required under Sec. 60.752(b)(1).

(ii) If the calculated NMOC emission rate is equal to or greater than 50 megagrams per year, then the landfill owner shall either comply with Sec. 60.752(b)(2), or determine a site-specific NMOC concentration and recalculate the NMOC emission rate using the procedures provided in paragraph (a)(3) of this section.

(3) Tier 2. The landfill owner or operator shall determine the NMOC concentration using the following sampling procedure. The landfill owner or operator shall install at least two sample probes per hectare of landfill surface that has retained waste for at least 2 years. If the landfill is larger than 25 hectares in area, only 50 samples are required. The sample probes should be located to avoid known areas of nondegradable solid waste. The owner or operator shall collect and analyze one sample of landfill gas from each probe to determine the NMOC concentration using Method 25 or 25C of appendix A of this part. Method 18 of appendix A of this part may be used to analyze the samples collected by the Method 25 or 25C sampling procedure. Taking composite samples from different probes into a single cylinder is allowed; however, equal sample volumes must be taken from each probe. For each composite, the sampling rate, collection times, beginning and ending cylinder vacuums, or alternative volume measurements must be recorded to verify that composite volumes are equal. Composite sample volumes should not be less than one liter unless evidence can be provided to substantiate the accuracy of smaller volumes. Terminate compositing before the cylinder approaches ambient pressure where measurement accuracy diminishes. If using Method 18, the owner or operator must identify all compounds in the sample and, as a minimum, test for those compounds published in the most recent Compilation of Air Pollutant Emission Factors (AP-42), minus carbon monoxide, hydrogen sulfide, and mercury. As a minimum, the instrument must be calibrated for each of the compounds on the list. Convert the concentration of each Method 18 compound to C_{NMOC} as hexane by multiplying by the ratio of its carbon atoms divided by six. If more than the required number of samples are taken, all samples must be used in the analysis. The landfill owner or operator must divide the NMOC concentration from Method 25 or 25C of appendix A of this part by six to convert from C_{NMOC} as carbon to C_{NMOC} as hexane. If the landfill has an active or passive gas removal system in place, Method 25 or 25C samples may be collected from these systems instead of surface probes

provided the removal system can be shown to provide sampling as representative as the two sampling probe per hectare requirement. For active collection systems, samples may be collected from the common header pipe before the gas moving or condensate removal equipment. For these systems, a minimum of three samples must be collected from the header pipe.

(i) The landfill owner or operator shall recalculate the NMOC mass emission rate using the equations provided in paragraph (a)(1)(i) or (a)(1)(ii) of this section and using the average NMOC concentration from the collected samples instead of the default value in the equation provided in paragraph (a)(1) of this section.

(ii) If the resulting mass emission rate calculated using the site-specific NMOC concentration is equal to or greater than 50 megagrams per year, then the landfill owner or operator shall either comply with Sec. 60.752(b)(2), or determine the site-specific methane generation rate constant and recalculate the NMOC emission rate using the site-specific methane generation rate using the procedure specified in paragraph
(a)(4) of this section.

(iii) If the resulting NMOC mass emission rate is less than 50 megagrams per year, the owner or operator shall submit a periodic estimate of the emission rate report as provided in Sec. 60.757(b)(1) and retest the site-specific NMOC concentration every 5 years using the methods specified in this section.

(4) Tier 3. The site-specific methane generation rate constant shall be determined using the procedures provided in Method 2E of appendix A of this part. The landfill owner or operator shall estimate the NMOC mass emission rate using equations in paragraph (a)(1)(i) or (a)(1)(ii) of this section and using a site-specific methane generation rate constant k, and the site-specific NMOC concentration as determined in paragraph (a)(3) of this section instead of the default values provided in paragraph (a)(1) of this section. The landfill owner or operator shall compare the resulting NMOC mass emission rate to the standard of 50 megagrams per year.

(i) If the NMOC mass emission rate as calculated using the site-specific methane generation rate and concentration of NMOC is equal to or greater than 50 megagrams per year, the owner or operator shall comply with Sec. 60.752(b)(2).

(ii) If the NMOC mass emission rate is less than 50 megagrams per year, then the owner or operator shall submit a periodic emission rate report as provided in Sec. 60.757(b)(1) and shall recalculate the NMOC mass emission rate annually, as provided in Sec. 60.757(b)(1) using the equations in paragraph (a)(1) of this section and using the site-specific methane generation rate constant and NMOC concentration obtained in paragraph (a)(3) of this section. The calculation of the methane generation rate constant is performed only once, and the value obtained from this test shall be used in all subsequent annual NMOC emission rate calculations.

(5) The owner or operator may use other methods to determine the NMOC concentration or a site-specific k as an alternative to the methods required in paragraphs (a)(3) and (a)(4) of this section if the method has been approved by the Administrator.

The Milner Butte Landfill has already exceeded the NMOC emission rate of 50 megagrams per year and installed an active collection and control system. Thus the above test methods and procedures are not applicable at this time.

(b) After the installation of a collection and control system in compliance with Sec. 60.755, the owner or operator shall calculate the NMOC emission rate for purposes of determining when the system can be removed as provided in Sec. 60.752(b)(2)(v), using the following equation:

$M_{NMOC} = 1.89 \times 10^{-3} Q_{LFG} C_{NMOC}$

where,

M_{NMOC} = mass emission rate of NMOC, megagrams per year
Q_{LFG} = flow rate of landfill gas, cubic meters per minute
C_{NMOC} = NMOC concentration, parts per million by volume as hexane

(1) The flow rate of landfill gas, Q_{LFG}, shall be determined by measuring the total landfill gas flow rate at the common header pipe that leads to the control device using a gas flow measuring device calibrated according to the provisions of section 4 of Method 2E of appendix A of this part.
(2) The average NMOC concentration, C_{NMOC}, shall be determined by collecting and analyzing landfill gas sampled from the common header pipe before the gas moving or condensate removal equipment using the procedures in Method 25C or Method 18 of appendix A of this part. If using Method 18 of appendix A of this part, the minimum list of compounds to be tested shall be those published in the most recent Compilation of Air Pollutant Emission Factors (AP-42). The sample location on the common header pipe shall be before any condensate removal or other gas refining units. The landfill owner or operator shall divide the NMOC concentration from Method 25C of appendix A of this part by six to convert from C_{NMOC} as carbon to C_{NMOC} as hexane.
(3) The owner or operator may use another method to determine landfill gas flow rate and NMOC concentration if the method has been approved by the Administrator.

The Milner Butte Landfill will calculate the NMOC emission rate for determining when the system can be removed as provided in Sec. 60.752(b)(2)(v) using the equation provided above.

(c) When calculating emissions for PSD purposes, the owner or operator of each MSW landfill subject to the provisions of this subpart shall estimate the NMOC emission rate for comparison to the PSD major source and significance levels in Sec. 51.166 or 52.21 of this chapter using AP-42 or other approved measurement procedures.

The Milner Butte Landfill will utilize AP-42 or other approved measurement procedures when calculating the NMOC emission rate for PSD purposes.

(d) For the performance test required in Sec. 60.752(b)(2)(iii)(B), Method 25, 25C, or Method 18 of appendix A of this part must be used to determine compliance with the 98 weight-percent efficiency or the 20 ppmv outlet concentration level, unless another method to demonstrate compliance has been approved by the Administrator as provided by Sec. 60.752(b)(2)(i)(B). Method 3 or 3A shall be used to determine oxygen for correcting the NMOC concentration as hexane to 3 percent. In cases where the outlet concentration is less than 50 ppm NMOC as carbon (8 ppm NMOC as hexane), Method 25A should be used in place of Method 25. If using Method 18 of appendix A of this part, the minimum list of compounds to be tested shall be those published in the most recent Compilation of Air Pollutant Emission Factors (AP-42). The following equation shall be used to calculate efficiency:

Control Efficiency = $(NMOC_{in} - NMOC_{out})/(NMOC_{in})$

where,

$NMOC_{in}$ = mass of NMOC entering control device
$NMOC_{out}$ = mass of NMOC exiting control device

(e) For the performance test required in Sec. 60.752(b)(2)(iii)(A), the net heating value of the combusted landfill gas as determined in Sec. 60.18(f)(3) is calculated from the concentration of methane in the landfill gas as measured by Method 3C. A minimum of three 30-minute Method 3C samples are determined. The measurement of other organic components, hydrogen, and carbon monoxide is not applicable. Method 3C may be used to determine the landfill gas molecular weight for calculating the flare gas exit velocity under Sec. 60.18(f)(4).

The Milner Butte Landfill acknowledges that performance tests shall be conducted as specified above.

[61 FR 9919, Mar. 12, 1996, as amended at 63 FR 32751, June 16, 1998; 65 FR 18908, Apr. 10, 2000; 65 FR 61778, Oct. 17, 2000; 71 FR 55127, Sept. 21, 2006]

Sec. 60.755 Compliance provisions.

(a) Except as provided in Sec. 60.752(b)(2)(i)(B), the specified methods in paragraphs (a)(1) through (a)(6) of this section shall be used to determine whether the gas collection system is in compliance with Sec. 60.752(b)(2)(ii).

(1) For the purposes of calculating the maximum expected gas generation flow rate from the landfill to determine compliance with Sec. 60.752(b)(2)(ii)(A)(1), one of the following equations shall be used. The k and L_o kinetic factors should be those published in the most recent Compilation of Air Pollutant Emission Factors (AP-42) or other site specific values demonstrated to be appropriate and approved by the Administrator. If k has been determined as specified in Sec. 60.754(a)(4), the value of k determined from the test shall be used. A value of no more than 15 years shall be used for the intended use period of the gas mover equipment. The active life of the landfill is the age of the landfill plus the estimated number of years until closure.

(i) For sites with unknown year-to-year solid waste acceptance rate:

$$Q_m = 2L_oR\ (e^{-kc} - e^{-kt})$$

where,

Q_m = maximum expected gas generation flow rate, cubic meters per year
L_o = methane generation potential, cubic meters per megagram solid waste
R = average annual acceptance rate, megagrams per year
k = methane generation rate constant, $year^{-1}$
t = age of the landfill at equipment installation plus the time the owner or operator intends to use the gas mover equipment or active life of the landfill, whichever is less. If the equipment is installed after closure, t is the age of the landfill at installation, yearsc = time since closure, years (for an active landfill c = O and e^{-kc} = 1)

(ii) For sites with known year-to-year solid waste acceptance rate:

$$Q_M = \sum_{i=1}^{n} 2\,k\,L_o\,M_i\left(e^{-kt_i}\right)$$

where,

Q_M=maximum expected gas generation flow rate, cubic meters per year
k=methane generation rate constant, $year^{-1}$
L_o=methane generation potential, cubic meters per megagram solid waste
M_i=mass of solid waste in the ith section, megagrams
t_i=age of the ith section, years

The Milner Butte Landfill acknowledges the above compliance provisions and has known year-to-year solid waste acceptance rates for input into the calculation.

(iii) If a collection and control system has been installed, actual flow data may be used to project the maximum expected gas generation flow rate instead of, or in conjunction with, the equations in paragraphs (a)(1) (i)and (ii) of this section. If the landfill is still accepting waste, the actual measured flow data will not equal the maximum expected gas generation rate, so calculations using the equations in paragraphs (a)(1) (i) or (ii) or other methods shall be used to predict the maximum expected gas generation rate over the intended period of use of the gas control system equipment.

The Milner Butte Landfill acknowledges this compliance provision and is still accepting waste.

(2) For the purposes of determining sufficient density of gas collectors for compliance with Sec. 60.752(b)(2)(ii)(A)(2),the owner or operator shall design a system of vertical wells, horizontal collectors, or other collection devices, satisfactory to the Administrator, capable of controlling and extracting gas from all portions of the landfill sufficient to meet all operational and performance standards.

The Milner Butte Landfill acknowledges this compliance provision.

(3) For the purpose of demonstrating whether the gas collection system flow rate is sufficient to determine compliance with Sec. 60.752(b)(2)(ii)(A)(3), the owner or operator shall measure gauge pressure in the gas collection header at each individual well, monthly. If a positive pressure exists, action shall be initiated to correct the exceedance within 5 calendar days, except for the three conditions allowed under Sec. 60.753(b). If negative pressure cannot be achieved without excess air infiltration within 15 calendar days of the first measurement, the gas collection system shall be expanded to correct the exceedance within 120 days of the initial measurement of positive pressure. Any attempted corrective measure shall not cause exceedances of other operational or performance standards. An alternative timeline for correcting the exceedance may be submitted to the Administrator for approval.

The Milner Butte Landfill acknowledges this compliance provision and submitted an alternative timeline for correcting exceedances to the Administrator for approval.

(4) Owners or operators are not required to expand the system as required in paragraph (a)(3) of this section during the first 180 days after gas collection system startup.

The Milner Butte Landfill acknowledges this compliance provision.

(5) For the purpose of identifying whether excess air infiltration into the landfill is occurring, the owner or operator shall monitor each well monthly for temperature and nitrogen or oxygen as provided in Sec. 60.753(c). If a well exceeds one of these operating parameters, action shall be initiated to correct the exceedance within 5 calendar days. If correction of the exceedance cannot be achieved within 15 calendar days of the first measurement, the gas collection system shall be expanded to correct the exceedance within 120 days of the initial exceedance. Any attempted corrective measure shall not cause exceedances of other operational or performance standards. An alternative timeline for correcting the exceedance may be submitted to the Administrator for approval.

The Milner Butte Landfill acknowledges this compliance provision and submitted an alternative timeline for correcting exceedances to the Administrator for approval.

(6) An owner or operator seeking to demonstrate compliance with Sec. 60.752(b)(2)(ii)(A)(4) through the use of a collection system not conforming to the specifications provided in Sec. 60.759 shall provide information satisfactory to the Administrator as specified in Sec. 60.752(b)(2)(i)(C) demonstrating that off-site migration is being controlled.

The Milner Butte Landfill has installed a collection system conforming to the specifications provided in Sec. 60.759.

(b) For purposes of compliance with Sec. 60.753(a), each owner or operator of a controlled landfill shall place each well or design component as specified in the approved design plan as provided in Sec. 60.752(b)(2)(i). Each well shall be installed no later than 60 days after the date on which the initial solid waste has been in place for a period of:
(1) 5 years or more if active; or
(2) 2 years or more if closed or at final grade.

The Milner Butte Landfill acknowledges this compliance provision and will install wells in accordance with the above.

(c) The following procedures shall be used for compliance with the surface methane operational standard as provided in Sec. 60.753(d).
(1) After installation of the collection system, the owner or operator shall monitor surface concentrations of methane along the entire perimeter of the collection area and along a pattern that traverses the landfill at 30 meter intervals (or a site-specific established spacing) for each collection area on a quarterly basis using an organic vapor analyzer, flame ionization detector, or other portable monitor meeting the specifications provided in paragraph (d) of this section.
(2) The background concentration shall be determined by moving the probe inlet upwind and downwind outside the boundary of the landfill at a distance of at least 30 meters from the perimeter wells.
(3) Surface emission monitoring shall be performed in accordance with section 4.3.1 of Method 21 of appendix A of this part, except that the probe inlet shall be placed within 5 to 10 centimeters of the ground. Monitoring shall be performed during typical meteorological conditions.
(4) Any reading of 500 parts per million or more above background at any location shall be recorded as a monitored exceedance and the actions specified in paragraphs (c)(4) (i) through (v) of this section shall be

taken. As long as the specified actions are taken, the exceedance is not a violation of the operational requirements of Sec. 60.753(d).

(i) The location of each monitored exceedance shall be marked and the location recorded.

(ii) Cover maintenance or adjustments to the vacuum of the adjacent wells to increase the gas collection in the vicinity of each exceedance shall be made and the location shall be re-monitored within 10 calendar days of detecting the exceedance.

(iii) If the re-monitoring of the location shows a second exceedance, additional corrective action shall be taken and the location shall be monitored again within 10 days of the second exceedance. If the re-monitoring shows a third exceedance for the same location, the action specified in paragraph (c)(4)(v) of this section shall be taken, and no further monitoring of that location is required until the action specified in paragraph (c)(4)(v) has been taken.

(iv) Any location that initially showed an exceedance but has a methane concentration less than 500 ppm methane above background at the 10-day re-monitoring specified in paragraph (c)(4) (ii) or (iii) of this section shall be re-monitored 1 month from the initial exceedance. If the 1-month remonitoring shows a concentration less than 500 parts per million above background, no further monitoring of that location is required until the next quarterly monitoring period. If the 1-month remonitoring shows an exceedance, the actions specified in paragraph (c)(4) (iii) or (v) shall be taken.

(v) For any location where monitored methane concentration equals or exceeds 500 parts per million above background three times within a quarterly period, a new well or other collection device shall be installed within 120 calendar days of the initial exceedance. An alternative remedy to the exceedance, such as upgrading the blower, header pipes or control device, and a corresponding timeline for installation may be submitted to the Administrator for approval.

(5) The owner or operator shall implement a program to monitor for cover integrity and implement cover repairs as necessary on a monthly basis.

(d) Each owner or operator seeking to comply with the provisions in paragraph (c) of this section shall comply with the following instrumentation specifications and procedures for surface emission monitoring devices:

(1) The portable analyzer shall meet the instrument specifications provided in section 3 of Method 21 of appendix A of this part, except that ``methane'' shall replace all references to VOC.

(2) The calibration gas shall be methane, diluted to a nominal concentration of 500 parts per million in air.

(3) To meet the performance evaluation requirements in section 3.1.3 of Method 21 of appendix A of this part, the instrument evaluation procedures of section 4.4 of Method 21 of appendix A of this part shall be used.

(4) The calibration procedures provided in section 4.2 of Method 21 of appendix A of this part shall be followed immediately before commencing a surface monitoring survey.

(e) The provisions of this subpart apply at all times, except during periods of start-up, shutdown, or malfunction, provided that the duration of start-up, shutdown, or malfunction shall not exceed 5 days for collection systems and shall not exceed 1 hour for treatment or control devices.

The Milner Butte Landfill acknowledges this compliance provision and will perform Surface Emissions Monitoring in accordance with the above.

[61 FR 9919, Mar. 12, 1996, as amended at 63 FR 32752, June 16, 1998]

Sec. 60.756 Monitoring of operations.

Except as provided in Sec. 60.752(b)(2)(i)(B),
(a) Each owner or operator seeking to comply with Sec. 60.752(b)(2)(ii)(A) for an active gas collection system shall install a sampling port and a thermometer, other temperature measuring device, or an access port for temperature measurements at each wellhead and:
(1) Measure the gauge pressure in the gas collection header on a monthly basis as provided in Sec. 60.755(a)(3); and
(2) Monitor nitrogen or oxygen concentration in the landfill gas on a monthly basis as provided in Sec. 60.755(a)(5); and
(3) Monitor temperature of the landfill gas on a monthly basis as provided in Sec. 60.755(a)(5).

The Milner Butte Landfill acknowledges this compliance provision and will monitoring the parameters specified above on a monthly basis.

(b) Each owner or operator seeking to comply with Sec. 60.752(b)(2)(iii) using an enclosed combustor shall calibrate, maintain, and operate according to the manufacturer's specifications, the following equipment.
(1) A temperature monitoring device equipped with a continuous recorder and having a minimum accuracy of <plus-minus<ls-thn-eq>1 percent of the temperature being measured expressed in degrees Celsius or <plus-minus<ls-thn-eq>0.5 degrees Celsius, whichever is greater. A temperature monitoring device is not required for boilers or process heaters with design heat input capacity equal to or greater than 44 megawatts.

The Milner Butte Landfill is using an enclosed combustor and will calibrate, maintain and operate a temperature monitoring device equipped with a continuous recorder according to the manufacturer’s specifications.

(2) A device that records flow to or bypass of the control device. The owner or operator shall either:
(i) Install, calibrate, and maintain a gas flow rate measuring device that shall record the flow to the control device at least every 15 minutes; or
(ii) Secure the bypass line valve in the closed position with a car-seal or a lock-and-key type configuration. A visual inspection of the seal or closure mechanism shall be performed at least once every month to ensure that the valve is maintained in the closed position and that the gas flow is not diverted through the bypass line.

The Milner Butte Landfill is using an enclosed combustor and will calibrate, maintain and operate a flow monitoring device equipped with a continuous recorder (at least every 15 minutes) according to the manufacturer’s specifications. There are no bypass lines installed on the collection and control system.

(c) Each owner or operator seeking to comply with Sec. 60.752(b)(2)(iii) using an open flare shall install, calibrate, maintain, and operate according to the manufacturer's specifications the following equipment:
(1) A heat sensing device, such as an ultraviolet beam sensor or thermocouple, at the pilot light or the flame itself to indicate the continuous presence of a flame.
(2) A device that records flow to or bypass of the flare. The owner or operator shall either:
(i) Install, calibrate, and maintain a gas flow rate measuring device that shall record the flow to the control device at least every 15 minutes; or

(ii) Secure the bypass line valve in the closed position with a car-seal or a lock-and-key type configuration. A visual inspection of the seal or closure mechanism shall be performed at least once every month to ensure that the valve is maintained in the closed position and that the gas flow is not diverted through the bypass line.

The Milner Butte Landfill is using an enclosed combustor.

(d) Each owner or operator seeking to demonstrate compliance with Sec. 60.752(b)(2)(iii) using a device other than an open flare or an enclosed combustor shall provide information satisfactory to the Administrator as provided in Sec. 60.752(b)(2)(i)(B) describing the operation of the control device, the operating parameters that would indicate proper performance, and appropriate monitoring procedures. The Administrator shall review the information and either approve it, or request that additional information be submitted. The Administrator may specify additional appropriate monitoring procedures.

The Milner Butte Landfill is using an enclosed combustor.

(e) Each owner or operator seeking to install a collection system that does not meet the specifications in Sec. 60.759 or seeking to monitor alternative parameters to those required by Sec. 60.753 through Sec. 60.756 shall provide information satisfactory to the Administrator as provided in Sec. 60.752(b)(2)(i) (B) and (C) describing the design and operation of the collection system, the operating parameters that would indicate proper performance, and appropriate monitoring procedures. The Administrator may specify additional appropriate monitoring procedures.

The Milner Butte Landfill has installed a collection system meeting the specifications in Sec. 60.759. The Milner Butte Landfill has submitted alternative monitoring parameters to the Administrator for approval.

(f) Each owner or operator seeking to demonstrate compliance with Sec. 60.755(c), shall monitor surface concentrations of methane according to the instrument specifications and procedures provided in Sec. 60.755(d). Any closed landfill that has no monitored exceedances of the operational standard in three consecutive quarterly monitoring periods may skip to annual monitoring. Any methane reading of 500 ppm or more above background detected during the annual monitoring returns the frequency for that landfill to quarterly monitoring.

The Milner Butte Landfill will perform Surface Emissions Monitoring in accordance to Sec. 60.755(d) and is an active landfill.

[61 FR 9919, Mar. 12, 1996, as amended at 63 FR 32752, June 16, 1998; 65 FR 18909, Apr. 10, 2000]

Sec. 60.757 Reporting requirements.

Except as provided in Sec. 60.752(b)(2)(i)(B),
(a) Each owner or operator subject to the requirements of this subpart shall submit an initial design capacity report to the Administrator.
(1) The initial design capacity report shall fulfill the requirements of the notification of the date construction is commenced as required by Sec. 60.7(a)(1) and shall be submitted no later than:

(i) June 10, 1996, for landfills that commenced construction, modification, or reconstruction on or after May 30, 1991 but before March 12, 1996 or
(ii) Ninety days after the date of commenced construction, modification, or reconstruction for landfills that commence construction, modification, or reconstruction on or after March 12, 1996.

The Milner Butte Landfill acknowledges the requirement for submittal of an initial design capacity report and has previously submitted the report to the Administrator.

(2) The initial design capacity report shall contain the following information:
(i) A map or plot of the landfill, providing the size and location of the landfill, and identifying all areas where solid waste may be landfilled according to the permit issued by the State, local, or tribal agency responsible for regulating the landfill.
(ii) The maximum design capacity of the landfill. Where the maximum design capacity is specified in the permit issued by the State, local, or tribal agency responsible for regulating the landfill, a copy of the permit specifying the maximum design capacity may be submitted as part of the report. If the maximum design capacity of the landfill is not specified in the permit, the maximum design capacity shall be calculated using good engineering practices. The calculations shall be provided, along with the relevant parameters as part of the report. The State, Tribal, local agency or Administrator may request other reasonable information as may be necessary to verify the maximum design capacity of the landfill.

The Milner Butte Landfill has previously submitted the initial design capacity report to the Administrator and included the above items.

(3) An amended design capacity report shall be submitted to the Administrator providing notification of an increase in the design capacity of the landfill, within 90 days of an increase in the maximum design capacity of the landfill to or above 2.5 million megagrams and 2.5 million cubic meters. This increase in design capacity may result from an increase in the permitted volume of the landfill or an increase in the density as documented in the annual recalculation required in Sec. 60.758(f).

The Milner Butte Landfill has a design capacity greater than 2.5 million megagrams and 2.5 million cubic meters.

(b) Each owner or operator subject to the requirements of this subpart shall submit an NMOC emission rate report to the Administrator initially and annually thereafter, except as provided for in paragraphs (b)(1)(ii) or (b)(3) of this section. The Administrator may request such additional information as may be necessary to verify the reported NMOC emission rate.
(1) The NMOC emission rate report shall contain an annual or 5-year estimate of the NMOC emission rate calculated using the formula and procedures provided in Sec. 60.754(a) or (b), as applicable.
(i) The initial NMOC emission rate report may be combined with the initial design capacity report required in paragraph (a) of this section and shall be submitted no later than indicated in paragraphs (b)(1)(i)(A) and (B) of this section. Subsequent NMOC emission rate reports shall be submitted annually thereafter, except as provided for in paragraphs (b)(1)(ii) and (b)(3) of this section.
(A) June 10, 1996, for landfills that commenced construction, modification, or reconstruction on or after May 30, 1991, but before March 12, 1996, or

(B) Ninety days after the date of commenced construction, modification, or reconstruction for landfills that commence construction, modification, or reconstruction on or after March 12, 1996.

(ii) If the estimated NMOC emission rate as reported in the annual report to the Administrator is less than 50 megagrams per year in each of the next 5 consecutive years, the owner or operator may elect to submit an estimate of the NMOC emission rate for the next 5-year period in lieu of the annual report. This estimate shall include the current amount of solid waste-in-place and the estimated waste acceptance rate for each year of the 5 years for which an NMOC emission rate is estimated. All data and calculations upon which this estimate is based shall be provided to the Administrator. This estimate shall be revised at least once every 5 years. If the actual waste acceptance rate exceeds the estimated waste acceptance rate in any year reported in the 5-year estimate, a revised 5-year estimate shall be submitted to the Administrator. The revised estimate shall cover the 5-year period beginning with the year in which the actual waste acceptance rate exceeded the estimated waste acceptance rate.

(2) The NMOC emission rate report shall include all the data, calculations, sample reports and measurements used to estimate the annual or 5-year emissions.

The Milner Butte Landfill has installed a collection and control system in compliance with Sec. 60.752(b)(2).

(3) Each owner or operator subject to the requirements of this subpart is exempted from the requirements of paragraphs (b)(1) and (2) of this section, after the installation of a collection and control system in compliance with Sec. 60.752(b)(2), during such time as the collection and control system is in operation and in compliance with Sec. Sec. 60.753 and 60.755.

The Milner Butte Landfill has installed a collection and control system in compliance with Sec. 60.752(b)(2).

(c) Each owner or operator subject to the provisions of Sec. 60.752(b)(2)(i) shall submit a collection and control system design plan to the Administrator within 1 year of the first report required under paragraph (b) of this section in which the emission rate equals or exceeds 50 megagrams per year, except as follows:

(1) If the owner or operator elects to recalculate the NMOC emission rate after Tier 2 NMOC sampling and analysis as provided in Sec. 60.754(a)(3) and the resulting rate is less than 50 megagrams per year, annual periodic reporting shall be resumed, using the Tier 2 determined site-specific NMOC concentration, until the calculated emission rate is equal to or greater than 50 megagrams per year or the landfill is closed. The revised NMOC emission rate report, with the recalculated emission rate based on NMOC sampling and analysis, shall be submitted within 180 days of the first calculated exceedance of 50 megagrams per year.

(2) If the owner or operator elects to recalculate the NMOC emission rate after determining a site-specific methane generation rate constant (k), as provided in Tier 3 in Sec. 60.754(a)(4), and the resulting NMOC emission rate is less than 50 Mg/yr, annual periodic reporting shall be resumed. The resulting site-specific methane generation rate constant (k) shall be used in the emission rate calculation until such time as the emissions rate calculation results in an exceedance. The revised NMOC emission rate report based on the provisions of Sec. 60.754(a)(4) and the resulting site-specific methane generation rate constant (k) shall be submitted to the Administrator

within 1 year of the first calculated emission rate exceeding 50 megagrams per year.

The Milner Butte Landfill has submitted a collection and control system design plan to the Administrator within the timeframe described above.

(d) Each owner or operator of a controlled landfill shall submit a closure report to the Administrator within 30 days of waste acceptance cessation. The Administrator may request additional information as may be necessary to verify that permanent closure has taken place in accordance with the requirements of 40 CFR 258.60. If a closure report has been submitted to the Administrator, no additional wastes may be placed into the landfill without filing a notification of modification as described under Sec. 60.7(a)(4).

The Milner Butte Landfill acknowledges the requirement to submit a closure report to the Administrator within 30 days of waste acceptance cessation.

(e) Each owner or operator of a controlled landfill shall submit an equipment removal report to the Administrator 30 days prior to removal or cessation of operation of the control equipment.
(1) The equipment removal report shall contain all of the following items:
(i) A copy of the closure report submitted in accordance with paragraph (d) of this section;
(ii) A copy of the initial performance test report demonstrating that the 15 year minimum control period has expired; and
(iii) Dated copies of three successive NMOC emission rate reports demonstrating that the landfill is no longer producing 50 megagrams or greater of NMOC per year.
(2) The Administrator may request such additional information as may be necessary to verify that all of the conditions for removal in Sec. 60.752(b)(2)(v) have been met.

The Milner Butte acknowledges the requirement to submit an equipment removal report to the Administrator 30 days prior to removal or cessation of control equipment operation.

(f) Each owner or operator of a landfill seeking to comply with Sec. 60.752(b)(2) using an active collection system designed in accordance with Sec. 60.752(b)(2)(ii) shall submit to the Administrator annual reports of the recorded information in (f)(1) through (f)(6) of this paragraph. The initial annual report shall be submitted within 180 days of installation and start-up of the collection and control system, and shall include the initial performance test report required under Sec. 60.8. For enclosed combustion devices and flares, reportable exceedances are defined under Sec. 60.758(c).
(1) Value and length of time for exceedance of applicable parameters monitored under Sec. 60.756(a), (b), (c), and (d).
(2) Description and duration of all periods when the gas stream is diverted from the control device through a bypass line or the indication of bypass flow as specified under Sec. 60.756.
(3) Description and duration of all periods when the control device was not operating for a period exceeding 1 hour and length of time the control device was not operating.
(4) All periods when the collection system was not operating in excess of 5 days.
(5) The location of each exceedance of the 500 parts per million methane concentration as provided in Sec. 60.753(d) and the concentration recorded at each location for which an exceedance was recorded in the previous month.

(6) The date of installation and the location of each well or collection system expansion added pursuant to paragraphs (a)(3), (b), and (c)(4) of Sec. 60.755.

The Milner Butte Landfill acknowledges the requirement to submit reports to the Administrator annually and will submit the initial annual report with the information required above according to the timeframe described above.

(g) Each owner or operator seeking to comply with Sec. 60.752(b)(2)(iii) shall include the following information with the initial performance test report required under Sec. 60.8:
(1) A diagram of the collection system showing collection system positioning including all wells, horizontal collectors, surface collectors, or other gas extraction devices, including the locations of any areas excluded from collection and the proposed sites for the future collection system expansion;
(2) The data upon which the sufficient density of wells, horizontal collectors, surface collectors, or other gas extraction devices and the gas mover equipment sizing are based;
(3) The documentation of the presence of asbestos or nondegradable material for each area from which collection wells have been excluded based on the presence of asbestos or nondegradable material;
(4) The sum of the gas generation flow rates for all areas from which collection wells have been excluded based on nonproductivity and the calculations of gas generation flow rate for each excluded area; and
(5) The provisions for increasing gas mover equipment capacity with increased gas generation flow rate, if the present gas mover equipment is inadequate to move the maximum flow rate expected over the life of the landfill; and
(6) The provisions for the control of off-site migration.

The Milner Butte Landfill acknowledges the requirements above for submittal of the initial performance test report.

[61 FR 9919, Mar. 12, 1996, as amended at 63 FR 32752, June 16, 1998; 65 FR 18909, Apr. 10, 2000]

Sec. 60.758 Recordkeeping requirements.

(a) Except as provided in Sec. 60.752(b)(2)(i)(B), each owner or operator of an MSW landfill subject to the provisions of Sec. 60.752(b) shall keep for at least 5 years up-to-date, readily accessible, on-site records of the design capacity report which triggered Sec. 60.752(b), the current amount of solid waste in-place, and the year-by-year waste acceptance rate. Off-site records may be maintained if they are retrievable within 4 hours. Either paper copy or electronic formats are acceptable.

The Milner Butte Landfill will keep up-to-day, readily accessible, on-site records for at least 5 years.

(b) Except as provided in Sec. 60.752(b)(2)(i)(B), each owner or operator of a controlled landfill shall keep up-to-date, readily accessible records for the life of the control equipment of the data listed in paragraphs (b)(1) through (b)(4) of this section as measured during the initial performance test or compliance determination. Records of subsequent tests or monitoring

shall be maintained for a minimum of 5 years. Records of the control device vendor specifications shall be maintained until removal.

(1) Where an owner or operator subject to the provisions of this subpart seeks to demonstrate compliance with Sec. 60.752(b)(2)(ii):

(i) The maximum expected gas generation flow rate as calculated in Sec. 60.755(a)(1). The owner or operator may use another method to determine the maximum gas generation flow rate, if the method has been approved by the Administrator.

(ii) The density of wells, horizontal collectors, surface collectors, or other gas extraction devices determined using the procedures specified in Sec. 60.759(a)(1).

(2) Where an owner or operator subject to the provisions of this subpart seeks to demonstrate compliance with Sec. 60.752(b)(2)(iii) through use of an enclosed combustion device other than a boiler or process heater with a design heat input capacity equal to or greater than 44 megawatts:

(i) The average combustion temperature measured at least every 15 minutes and averaged over the same time period of the performance test.

(ii) The percent reduction of NMOC determined as specified in Sec. 60.752(b)(2)(iii)(B) achieved by the control device.

The Milner Butte Landfill has an enclosed combustion device and will maintain records require above for the time requirements described above.

(3) Where an owner or operator subject to the provisions of this subpart seeks to demonstrate compliance with Sec. 60.752(b)(2)(iii)(B)(1) through use of a boiler or process heater of any size: a description of the location at which the collected gas vent stream is introduced into the boiler or process heater over the same time period of the performance testing.

The Milner Butte Landfill has an enclosed combustion device.

(4) Where an owner or operator subject to the provisions of this subpart seeks to demonstrate compliance with Sec. 60.752(b)(2)(iii)(A) through use of an open flare, the flare type (i.e., steam-assisted, air-assisted, or nonassisted), all visible emission readings, heat content determination, flow rate or bypass flow rate measurements, and exit velocity determinations made during the performance test as specified in Sec. 60.18; continuous records of the flare pilot flame or flare flame monitoring and records of all periods of operations during which the pilot flame of the flare flame is absent.

The Milner Butte Landfill has an enclosed combustion.

(c) Except as provided in Sec. 60.752(b)(2)(i)(B), each owner or operator of a controlled landfill subject to the provisions of this subpart shall keep for 5 years up-to-date, readily accessible continuous records of the equipment operating parameters specified to be monitored in Sec. 60.756 as well as up-to-date, readily accessible records for periods of operation during which the parameter boundaries established during the most recent performance test are exceeded.

(1) The following constitute exceedances that shall be recorded and reported under Sec. 60.757(f):

(i) For enclosed combustors except for boilers and process heaters with design heat input capacity of 44 megawatts (150 million British thermal unit per hour) or greater, all 3-hour periods of operation during which the average combustion temperature was more than 28 oC below the average combustion temperature during the most recent performance test at which compliance with Sec. 60.752(b)(2)(iii) was determined.

The Milner Butte Landfill has an enclosed combustion.

(ii) For boilers or process heaters, whenever there is a change in the location at which the vent stream is introduced into the flame zone as required under paragraph (b)(3) of this section.

The Milner Butte Landfill has an enclosed combustion.

(2) Each owner or operator subject to the provisions of this subpart shall keep up-to-date, readily accessible continuous records of the indication of flow to the control device or the indication of bypass flow or records of monthly inspections of car-seals or lock-and-key configurations used to seal bypass lines, specified under Sec. 60.756.

The Milner Butte Landfill will keep up-to-date, readily accessible continuous records of the flow to the control device. The collection and control system does not have a bypass line.

(3) Each owner or operator subject to the provisions of this subpart who uses a boiler or process heater with a design heat input capacity of 44 megawatts or greater to comply with Sec. 60.752(b)(2)(iii) shall keep an up-to-date, readily accessible record of all periods of operation of the boiler or process heater. (Examples of such records could include records of steam use, fuel use, or monitoring data collected pursuant to other State, local, Tribal, or Federal regulatory requirements.)

The Milner Butte Landfill has an enclosed combustion.

(4) Each owner or operator seeking to comply with the provisions of this subpart by use of an open flare shall keep up-to-date, readily accessible continuous records of the flame or flare pilot flame monitoring specified under Sec. 60.756(c), and up-to-date, readily accessible records of all periods of operation in which the flame or flare pilot flame is absent.

The Milner Butte Landfill has an enclosed combustion.

(d) Except as provided in Sec. 60.752(b)(2)(i)(B), each owner or operator subject to the provisions of this subpart shall keep for the life of the collection system an up-to-date, readily accessible plot map showing each existing and planned collector in the system and providing a unique identification location label for each collector.

The Milner Butte Landfill will maintain a plot map showing the location of each existing and planned collector in the system and provide a unique identification label for each collector for the life of the collection system.

(1) Each owner or operator subject to the provisions of this subpart shall keep up-to-date, readily accessible records of the installation date and location of all newly installed collectors as specified under Sec. 60.755(b).
(2) Each owner or operator subject to the provisions of this subpart shall keep readily accessible documentation of the nature, date of deposition, amount, and location of asbestos-containing or nondegradable waste excluded from collection as provided in Sec. 60.759(a)(3)(i) as well as any nonproductive areas excluded from collection as provided in Sec. 60.759(a)(3)(ii).

The Milner Butte Landfill will keep up-to-date, readily accessible records of the above requirements.

(e) Except as provided in Sec. 60.752(b)(2)(i)(B), each owner or operator subject to the provisions of this subpart shall keep for at least 5 years up-to-date, readily accessible records of all collection and control system exceedances of the operational standards in Sec. 60.753, the reading in the subsequent month whether or not the second reading is an exceedance, and the location of each exceedance.

The Milner Butte Landfill will keep up-to-date, readily accessible records of exceedances for at least 5 years.

(f) Landfill owners or operators who convert design capacity from volume to mass or mass to volume to demonstrate that landfill design capacity is less than 2.5 million megagrams or 2.5 million cubic meters, as provided in the definition of ``design capacity'', shall keep readily accessible, on-site records of the annual recalculation of site-specific density, design capacity, and the supporting documentation. Off-site records may be maintained if they are retrievable within 4 hours. Either paper copy or electronic formats are acceptable.

The Milner Butte Landfill has a design capacity greater than 2.5 million megagrams and 2.5 million cubic metres.

[61 FR 9919, Mar. 12, 1996, as amended at 63 FR 32752, June 16, 1998; 65 FR 18909, Apr. 10, 2000]

Sec. 60.759 Specifications for active collection systems.

(a) Each owner or operator seeking to comply with Sec. 60.752(b)(2)(i) shall site active collection wells, horizontal collectors, surface collectors, or other extraction devices at a sufficient density throughout all gas producing areas using the following procedures unless alternative procedures have been approved by the Administrator as provided in Sec. 60.752(b)(2)(i)(C) and (D):

(1) The collection devices within the interior and along the perimeter areas shall be certified to achieve comprehensive control of surface gas emissions by a professional engineer. The following issues shall be addressed in the design: depths of refuse, refuse gas generation rates and flow characteristics, cover properties, gas system expandability, leachate and condensate management, accessibility, compatibility with filling operations, integration with closure end use, air intrusion control, corrosion resistance, fill settlement, and resistance to the refuse decomposition heat.

(2) The sufficient density of gas collection devices determined in paragraph (a)(1) of this section shall address landfill gas migration issues and augmentation of the collection system through the use of active or passive systems at the landfill perimeter or exterior.

(3) The placement of gas collection devices determined in paragraph (a)(1) of this section shall control all gas producing areas, except as provided by paragraphs (a)(3)(i) and (a)(3)(ii) of this section.

The Milner Butte Landfill acknowledges the above specifications for an active collection system.

(i) Any segregated area of asbestos or nondegradable material may be excluded from collection if documented as provided under Sec. 60.758(d). The documentation shall provide the nature, date of deposition, location and amount of asbestos or nondegradable material deposited in the area, and shall be provided to the Administrator upon request.

The Milner Butte Landfill acknowledges the above specification for areas of asbestos or nondegradeable material and will exclude these areas for collection through documentation required under Sec. 60.758(d).

(ii) Any nonproductive area of the landfill may be excluded from control, provided that the total of all excluded areas can be shown to contribute less than 1 percent of the total amount of NMOC emissions from the landfill. The amount, location, and age of the material shall be documented and provided to the Administrator upon request. A separate NMOC emissions estimate shall be made for each section proposed for exclusion, and the sum of all such sections shall be compared to the NMOC emissions estimate for the entire landfill. Emissions from each section shall be computed using the following equation:

$$Q_i = 2\ k\ L_o M_i (e^{-kt_i})\ (C_{NMOC})\ (3.6 \times 10^{-9})$$

where,

Q_i = NMOC emission rate from the ith section, megagrams per year
k = methane generation rate constant, $year^{-1}$
L_o = methane generation potential, cubic meters per megagram solid waste
M_i = mass of the degradable solid waste in the ith section, megagram
t_i = age of the solid waste in the ith section, years
C_{NMOC} = concentration of nonmethane organic compounds, parts per million by volume
$3.6x10^{-9}$ = conversion factor

(iii) The values for k and C_{NMOC} determined in field testing shall be used if field testing has been performed in determining the NMOC emission rate or the radii of influence (this distance from the well center to a point in the landfill where the pressure gradient applied by the blower or compressor approaches zero). If field testing has not been performed, the default values for k, L_o and C_{NMOC} provided in Sec. 60.754(a)(1) or the alternative values from Sec. 60.754(a)(5) shall be used. The mass of nondegradable solid waste contained within the given section may be subtracted from the total mass of the section when estimating emissions provided the nature, location, age, and amount of the nondegradable material is documented as provided in paragraph (a)(3)(i) of this section.

The Milner Butte Landfill acknowledges the above specifications for an active collection system.

(b) Each owner or operator seeking to comply with Sec. 60.752(b)(2)(i)(A) shall construct the gas collection devices using the following equipment or procedures:
(1) The landfill gas extraction components shall be constructed of polyvinyl chloride (PVC), high density polyethylene (HDPE) pipe, fiberglass, stainless steel, or other nonporous corrosion resistant material of suitable dimensions to: convey projected amounts of gases; withstand installation, static, and settlement forces; and withstand planned overburden or traffic loads. The collection system shall extend as necessary to comply with

emission and migration standards. Collection devices such as wells and horizontal collectors shall be perforated to allow gas entry without head loss sufficient to impair performance across the intended extent of control. Perforations shall be situated with regard to the need to prevent excessive air infiltration.

(2) Vertical wells shall be placed so as not to endanger underlying liners and shall address the occurrence of water within the landfill. Holes and trenches constructed for piped wells and horizontal collectors shall be of sufficient cross-section so as to allow for their proper construction and completion including, for example, centering of pipes and placement of gravel backfill. Collection devices shall be designed so as not to allow indirect short circuiting of air into the cover or refuse into the collection system or gas into the air. Any gravel used around pipe perforations should be of a dimension so as not to penetrate or block perforations.

(3) Collection devices may be connected to the collection header pipes below or above the landfill surface. The connector assembly shall include a positive closing throttle valve, any necessary seals and couplings, access couplings and at least one sampling port. The collection devices shall be constructed of PVC, HDPE, fiberglass, stainless steel, or other nonporous material of suitable thickness.

The Milner Butte Landfill acknowledges the above specifications for an active collection system.

(c) Each owner or operator seeking to comply with Sec. 60.752(b)(2)(i)(A) shall convey the landfill gas to a control system in compliance with Sec. 60.752(b)(2)(iii) through the collection header pipe(s). The gas mover equipment shall be sized to handle the maximum gas generation flow rate expected over the intended use period of the gas moving equipment using the following procedures:

(1) For existing collection systems, the flow data shall be used to project the maximum flow rate. If no flow data exists, the procedures in paragraph (c)(2) of this section shall be used.

(2) For new collection systems, the maximum flow rate shall be in accordance with Sec. 60.755(a)(1).

The Milner Butte Landfill acknowledges the above specifications for an active collection system.

[61 FR 9919, Mar. 12, 1996, as amended at 63 FR 32753, June 16, 1998; 64 FR 9262, Feb. 24, 1999; 65 FR 18909, Apr. 10, 2000]

[Code of Federal Regulations]
[Title 40, Volume 8]
[Revised as of July 1, 2010]
From the U.S. Government Printing Office via GPO Access
[CITE: 40CFR61]

TITLE 40--PROTECTION OF ENVIRONMENT

CHAPTER I--ENVIRONMENTAL PROTECTION AGENCY (CONTINUED)

PART 61_NATIONAL EMISSION STANDARDS FOR HAZARDOUS AIR POLLUTANTS--Table of

Subpart M_National Emission Standard for Asbestos

Authority: 42 U.S.C. 7401, 7412, 7414, 7416, 7601.

Source: 49 FR 13661, Apr. 5, 1984, unless otherwise noted.

Sec. 61.140 Applicability.

The provisions of this subpart are applicable to those sources specified in Sec. 61.142 through 61.151, 61.154, and 61.155.

The Milner Butte Landfill is an active waste disposal site and is subject to Sec 61.154.

[55 FR 48414, Nov. 20, 1990]

Sec. 61.141 Definitions.

All terms that are used in this subpart and are not defined below are given the same meaning as in the Act and in subpart A of this part.

Active waste disposal site means any disposal site other than an inactive site.

Adequately wet means sufficiently mix or penetrate with liquid to prevent the release of particulates. If visible emissions are observed coming from asbestos-containing material, then that material has not been adequately wetted. However, the absence of visible emissions is not sufficient evidence of being adequately wet.

Asbestos means the asbestiform varieties of serpentinite (chrysotile), riebeckite (crocidolite), cummingtonite-grunerite, anthophyllite, and actinolite-tremolite.

Asbestos-containing waste materials means mill tailings or any waste that contains commercial asbestos and is generated by a source subject to the provisions of this subpart. This term includes filters from control devices, friable asbestos waste material, and bags or other similar packaging contaminated with commercial asbestos. As applied to demolition and renovation operations, this term also includes regulated asbestos-containing material waste and materials contaminated with asbestos including disposable equipment and clothing.

Asbestos mill means any facility engaged in converting, or in any intermediate step in converting, asbestos ore into commercial asbestos. Outside storage of asbestos material is not considered a part of the asbestos mill.

Asbestos tailings means any solid waste that contains asbestos and is a product of asbestos mining or milling operations.

Asbestos waste from control devices means any waste material that contains asbestos and is collected by a pollution control device.

Category I nonfriable asbestos-containing material (ACM) means asbestos-containing packings, gaskets, resilient floor covering, and asphalt roofing products containing more than 1 percent asbestos as determined using the method specified in appendix E, subpart E, 40 CFR part 763, section 1, Polarized Light Microscopy.

Category II nonfriable ACM means any material, excluding Category I nonfriable ACM, containing more than 1 percent asbestos as determined using the methods specified in appendix E, subpart E, 40 CFR part 763, section 1, Polarized Light Microscopy that, when dry, cannot be crumbled, pulverized, or reduced to powder by hand pressure.

Commercial asbestos means any material containing asbestos that is extracted from ore and has value because of its asbestos content.

Cutting means to penetrate with a sharp-edged instrument and includes sawing, but does not include shearing, slicing, or punching.

Demolition means the wrecking or taking out of any load-supporting structural member of a facility together with any related handling operations or the intentional burning of any facility.

Emergency renovation operation means a renovation operation that was not planned but results from a sudden, unexpected event that, if not immediately attended to, presents a safety or public health hazard, is necessary to protect equipment from damage, or is necessary to avoid imposing an unreasonable financial burden. This term includes operations necessitated by nonroutine failures of equipment.

Fabricating means any processing (e.g., cutting, sawing, drilling) of a manufactured product that contains commercial asbestos, with the exception of processing at temporary sites (field fabricating) for the construction or restoration of facilities. In the case of friction products, fabricating includes bonding, debonding, grinding, sawing, drilling, or other similar operations performed as part of fabricating.

Facility means any institutional, commercial, public, industrial, or residential structure, installation, or building (including any structure, installation, or building containing condominiums or individual dwelling units operated as a residential cooperative, but excluding residential buildings having four or fewer dwelling units); any ship; and any active or inactive waste disposal site. For purposes of this definition, any building, structure, or installation that contains a loft used as a dwelling is not considered a residential structure, installation, or building. Any structure, installation or building that was previously subject to this subpart is not excluded, regardless of its current use or function.

Facility component means any part of a facility including equipment.

Friable asbestos material means any material containing more than 1 percent asbestos as determined using the method specified in appendix E, subpart E, 40 CFR part 763, section 1, Polarized Light Microscopy, that, when dry, can be crumbled, pulverized, or reduced to powder by hand pressure. If the asbestos content is less than 10 percent as determined by a method other than point counting by polarized light microscopy (PLM), verify the asbestos content by point counting using PLM.

Fugitive source means any source of emissions not controlled by an air pollution control device.

Glove bag means a sealed compartment with attached inner gloves used for the handling of asbestos-containing materials. Properly installed and used, glove bags provide a small work area enclosure typically used for small-scale asbestos stripping operations. Information on glove-bag installation, equipment and supplies, and work practices is contained in the Occupational

Safety and Health Administration's (OSHA's) final rule on occupational exposure to asbestos (appendix G to 29 CFR 1926.58).

Grinding means to reduce to powder or small fragments and includes mechanical chipping or drilling.

In poor condition means the binding of the material is losing its integrity as indicated by peeling, cracking, or crumbling of the material.

Inactive waste disposal site means any disposal site or portion of it where additional asbestos-containing waste material has not been deposited within the past year.

Installation means any building or structure or any group of buildings or structures at a single demolition or renovation site that are under the control of the same owner or operator (or owner or operator under common control).

Leak-tight means that solids or liquids cannot escape or spill out. It also means dust-tight.

Malfunction means any sudden and unavoidable failure of air pollution control equipment or process equipment or of a process to operate in a normal or usual manner so that emissions of asbestos are increased. Failures of equipment shall not be considered malfunctions if they are caused in any way by poor maintenance, careless operation, or any other preventable upset conditions, equipment breakdown, or process failure.

Manufacturing means the combining of commercial asbestos--or, in the case of woven friction products, the combining of textiles containing commercial asbestos--with any other material(s), including commercial asbestos, and the processing of this combination into a product. Chlorine production is considered a part of manufacturing.

Natural barrier means a natural object that effectively precludes or deters access. Natural barriers include physical obstacles such as cliffs, lakes or other large bodies of water, deep and wide ravines, and mountains. Remoteness by itself is not a natural barrier.

Nonfriable asbestos-containing material means any material containing more than 1 percent asbestos as determined using the method specified in appendix E, subpart E, 40 CFR part 763, section 1, Polarized Light Microscopy, that, when dry, cannot be crumbled, pulverized, or reduced to powder by hand pressure.

Nonscheduled renovation operation means a renovation operation necessitated by the routine failure of equipment, which is expected to occur within a given period based on past operating experience, but for which an exact date cannot be predicted.

Outside air means the air outside buildings and structures, including, but not limited to, the air under a bridge or in an open air ferry dock.

Owner or operator of a demolition or renovation activity means any person who owns, leases, operates, controls, or supervises the facility being demolished or renovated or any person who owns, leases, operates, controls, or supervises the demolition or renovation operation, or both.

Particulate asbestos material means finely divided particles of asbestos or material containing asbestos.

Planned renovation operations means a renovation operation, or a number of such operations, in which some RACM will be removed or stripped within a given period of time and that can be predicted. Individual nonscheduled operations are included if a number of such operations can be predicted to occur during a given period of time based on operating experience.

Regulated asbestos-containing material (RACM) means (a) Friable asbestos material, (b) Category I nonfriable ACM that has become friable, (c) Category I nonfriable ACM that will be or has been subjected to sanding, grinding, cutting, or abrading, or (d) Category II nonfriable ACM that has a high probability of becoming or has become crumbled, pulverized, or reduced to

powder by the forces expected to act on the material in the course of demolition or renovation operations regulated by this subpart.

Remove means to take out RACM or facility components that contain or are covered with RACM from any facility.

Renovation means altering a facility or one or more facility components in any way, including the stripping or removal of RACM from a facility component. Operations in which load-supporting structural members are wrecked or taken out are demolitions.

Resilient floor covering means asbestos-containing floor tile, including asphalt and vinyl floor tile, and sheet vinyl floor covering containing more than 1 percent asbestos as determined using polarized light microscopy according to the method specified in appendix E, subpart E, 40 CFR part 763, section 1, Polarized Light Microscopy.

Roadways means surfaces on which vehicles travel. This term includes public and private highways, roads, streets, parking areas, and driveways.

Strip means to take off RACM from any part of a facility or facility components.

Structural member means any load-supporting member of a facility, such as beams and load supporting walls; or any nonload-supporting member, such as ceilings and nonload-supporting walls.

Visible emissions means any emissions, which are visually detectable without the aid of instruments, coming from RACM or asbestos-containing waste material, or from any asbestos milling, manufacturing, or fabricating operation. This does not include condensed, uncombined water vapor.

Waste generator means any owner or operator of a source covered by this subpart whose act or process produces asbestos-containing waste material.

Waste shipment record means the shipping document, required to be originated and signed by the waste generator, used to track and substantiate the disposition of asbestos-containing waste material.

Working day means Monday through Friday and includes holidays that fall on any of the days Monday through Friday.

The Milner Butte Landfill acknowledges the definitions.

[49 FR 13661, Apr. 5, 1984; 49 FR 25453, June 21, 1984, as amended by 55 FR 48414, Nov. 20, 1990; 56 FR 1669, Jan. 16, 1991; 60 FR 31920, June 19, 1995]

Sec. 61.142 Standard for asbestos mills.

(a) Each owner or operator of an asbestos mill shall either discharge no visible emissions to the outside air from that asbestos mill, including fugitive sources, or use the methods specified by Sec. 61.152 to clean emissions containing particulate asbestos material before they escape to, or are vented to, the outside air.

(b) Each owner or operator of an asbestos mill shall meet the following requirements:

(1) Monitor each potential source of asbestos emissions from any part of the mill facility, including air cleaning devices, process equipment, and buildings that house equipment for material processing and handling, at least once each day, during daylight hours, for visible emissions to the outside air during periods of operation. The monitoring shall be by visual observation of at least 15 seconds duration per source of emissions.

(2) Inspect each air cleaning device at least once each week for proper operation and for changes that signal the potential for malfunction, including, to the maximum extent possible without dismantling other than opening the device, the presence of tears, holes, and abrasions in filter

bags and for dust deposits on the clean side of bags. For air cleaning devices that cannot be inspected on a weekly basis according to this paragraph, submit to the Administrator, and revise as necessary, a written maintenance plan to include, at a minimum, the following:

(i) Maintenance schedule.

(ii) Recordkeeping plan.

(3) Maintain records of the results of visible emissions monitoring and air cleaning device inspections using a format similar to that shown in Figures 1 and 2 and include the following:

(i) Date and time of each inspection.

(ii) Presence or absence of visible emissions.

(iii) Condition of fabric filters, including presence of any tears, holes, and abrasions.

(iv) Presence of dust deposits on clean side of fabric filters.

(v) Brief description of corrective actions taken, including date and time.

(vi) Daily hours of operation for each air cleaning device.

(4) Furnish upon request, and make available at the affected facility during normal business hours for inspection by the Administrator, all records required under this section.

(5) Retain a copy of all monitoring and inspection records for at least 2 years.

(6) Submit semiannually a copy of visible emission monitoring records to the Administrator if visible emissions occurred during the report period. Semiannual reports shall be postmarked by the 30th day following the end of the six-month period.

The Milner Butte Landfill is not an asbestos mill and is not subject to the above.

[55 FR 48416, Nov. 20, 1990, as amended at 64 FR 7467, Feb. 12, 1999]

Sec. 61.143 Standard for roadways.

No person may construct or maintain a roadway with asbestos tailings or asbestos-containing waste material on that roadway, unless, for asbestos tailings.

(a) It is a temporary roadway on an area of asbestos ore deposits (asbestos mine): or

(b) It is a temporary roadway at an active asbestos mill site and is encapsulated with a resinous or bituminousbinder. The encapsulated road surface must be maintained at a minimum frequency of once per year to prevent dust emissions; or

(c) It is encapsulated in asphalt concrete meeting the specifications contained in section 401 of Standard Specifications for Construction of Roads and Bridges on Federal Highway Projects, FP-85, 1985, or their equivalent.

The Milner Butte Landfill has no asbestos roadways.

[55 FR 48419, Nov. 20, 1990; 56 FR 1669, Jan. 16, 1991]

Sec. 61.144 Standard for manufacturing.

(a) Applicability. This section applies to the following manufacturing operations using commercial asbestos.

(1) The manufacture of cloth, cord, wicks, tubing, tape, twine, rope, thread, yarn, roving, lap, or other textile materials.

(2) The manufacture of cement products.

(3) The manufacture of fireproofing and insulating materials.
(4) The manufacture of friction products.
(5) The manufacture of paper, millboard, and felt.
(6) The manufacture of floor tile.
(7) The manufacture of paints, coatings, caulks, adhesives, and sealants.
(8) The manufacture of plastics and rubber materials.
(9) The manufacture of chlorine utilizing asbestos diaphragm technology.
(10) The manufacture of shotgun shell wads.
(11) The manufacture of asphalt concrete.

(b) Standard. Each owner or operator of any of the manufacturing operations to which this section applies shall either:

(1) Discharge no visible emissions to the outside air from these operations or from any building or structure in which they are conducted or from any other fugitive sources; or

(2) Use the methods specified by Sec. 61.152 to clean emissions from these operations containing particulate asbestos material before they escape to, or are vented to, the outside air.

(3) Monitor each potential source of asbestos emissions from any part of the manufacturing facility, including air cleaning devices, process equipment, and buildings housing material processing and handling equipment, at least once each day during daylight hours for visible emissions to the outside air during periods of operation. The monitoring shall be by visual observation of at least 15 seconds duration per source of emissions.

(4) Inspect each air cleaning device at least once each week for proper operation and for changes that signal the potential for malfunctions, including, to the maximum extent possible without dismantling other than opening the device, the presence of tears, holes, and abrasions in filter bags and for dust deposits on the clean side of bags. For air cleaning devices that cannot be inspected on a weekly basis according to this paragraph, submit to the Administrator, and revise as necessary, a written maintenance plan to include, at a minimum, the following:

(i) Maintenance schedule.
(ii) Recordkeeping plan.

(5) Maintain records of the results of visible emission monitoring and air cleaning device inspections using a format similar to that shown in Figures 1 and 2 and include the following.

(i) Date and time of each inspection.
(ii) Presence or absence of visible emissions.
(iii) Condition of fabric filters, including presence of any tears, holes and abrasions.
(iv) Presence of dust deposits on clean side of fabric filters.
(v) Brief description of corrective actions taken, including date and time.
(vi) Daily hours of operation for each air cleaning device.

(6) Furnish upon request, and make available at the affected facility during normal business hours for inspection by the Administrator, all records required under this section.

(7) Retain a copy of all monitoring and inspection records for at least 2 years.

(8) Submit semiannually a copy of the visible emission monitoring records to the Administrator if visible emission occurred during the report period. Semiannual reports shall be postmarked by the 30th day following the end of the six-month period.

The Milner Butte Landfill does not manufacture asbestos containing materials.

[49 FR 13661, Apr. 5, 1984, as amended at 55 FR 48419, Nov. 20, 1990; 56 FR 1669, Jan. 16, 1991; 64 FR 7467, Feb. 12, 1999]

Sec. 61.145 Standard for demolition and renovation.

(a) Applicability. To determine which requirements of paragraphs (a), (b), and (c) of this section apply to the owner or operator of a demolition or renovation activity and prior to the commencement of the demolition or renovation, thoroughly inspect the affected facility or part of the facility where the demolition or renovation operation will occur for the presence of asbestos, including Category I and Category II nonfriable ACM. The requirements of paragraphs (b) and (c) of this section apply to each owner or operator of a demolition or renovation activity, including the removal of RACM as follows:

(1) In a facility being demolished, all the requirements of paragraphs (b) and (c) of this section apply, except as provided in paragraph (a)(3) of this section, if the combined amount of RACM is

(i) At least 80 linear meters (260 linear feet) on pipes or at least 15 square meters (160 square feet) on other facility components, or

(ii) At least 1 cubic meter (35 cubic feet) off facility components where the length or area could not be measured previously.

(2) In a facility being demolished, only the notification requirements of paragraphs (b)(1), (2), (3)(i) and (iv), and (4)(i) through (vii) and (4)(ix) and (xvi) of this section apply, if the combined amount of RACM is

(i) Less than 80 linear meters (260 linear feet) on pipes and less than 15 square meters (160 square feet) on other facility components, and

(ii) Less than one cubic meter (35 cubic feet) off facility components where the length or area could not be measured previously or there is no asbestos.

(3) If the facility is being demolished under an order of a State or local government agency, issued because the facility is structurally unsound and in danger of imminent collapse, only the requirements of paragraphs (b)(1), (b)(2), (b)(3)(iii), (b)(4) (except (b)(4)(viii)), (b)(5), and (c)(4) through (c)(9) of this section apply.

(4) In a facility being renovated, including any individual nonscheduled renovation operation, all the requirements of paragraphs (b) and (c) of this section apply if the combined amount of RACM to be stripped, removed, dislodged, cut, drilled, or similarly disturbed is

(i) At least 80 linear meters (260 linear feet) on pipes or at least 15 square meters (160 square feet) on other facility components, or

(ii) At least 1 cubic meter (35 cubic feet) off facility components where the length or area could not be measured previously.

(iii) To determine whether paragraph (a)(4) of this section applies to planned renovation operations involving individual nonscheduled operations, predict the combined additive amount of RACM to be removed or stripped during a calendar year of January 1 through December 31.

(iv) To determine whether paragraph (a)(4) of this section applies to emergency renovation operations, estimate the combined amount of RACM to be removed or stripped as a result of the sudden, unexpected event that necessitated the renovation.

(5) Owners or operators of demolition and renovation operations are exempt from the requirements of Sec. Sec. 61.05(a), 61.07, and 61.09.

(b) Notification requirements. Each owner or operator of a demolition or renovation activity to which this section applies shall:

(1) Provide the Administrator with written notice of intention to demolish or renovate. Delivery of the notice by U.S. Postal Service, commercial delivery service, or hand delivery is acceptable.

(2) Update notice, as necessary, including when the amount of asbestos affected changes by at least 20 percent.

(3) Postmark or deliver the notice as follows:
(i) At least 10 working days before asbestos stripping or removal work or any other activity begins (such as site preparation that would break up, dislodge or similarly disturb asbestos material), if the operation is described in paragraphs (a) (1) and (4) (except (a)(4)(iii) and (a)(4)(iv)) of this section. If the operation is as described in paragraph (a)(2) of this section, notification is required 10 working days before demolition begins.
(ii) At least 10 working days before the end of the calendar year preceding the year for which notice is being given for renovations described in paragraph (a)(4)(iii) of this section.
(iii) As early as possible before, but not later than, the following working day if the operation is a demolition ordered according to paragraph (a)(3) of this section or, if the operation is a renovation described in paragraph (a)(4)(iv) of this section.
(iv) For asbestos stripping or removal work in a demolition or renovation operation, described in paragraphs (a) (1) and (4) (except (a)(4)(iii) and (a)(4)(iv)) of this section, and for a demolition described in paragraph (a)(2) of this section, that will begin on a date other than the one contained in the original notice, notice of the new start date must be provided to the Administrator as follows:
(A) When the asbestos stripping or removal operation or demolition operation covered by this paragraph will begin after the date contained in the notice,
(1) Notify the Administrator of the new start date by telephone as soon as possible before the original start date, and
(2) Provide the Administrator with a written notice of the new start date as soon as possible before, and no later than, the original start date. Delivery of the updated notice by the U.S. Postal Service, commercial delivery service, or hand delivery is acceptable.
(B) When the asbestos stripping or removal operation or demolition operation covered by this paragraph will begin on a date earlier than the original start date,
(1) Provide the Administrator with a written notice of the new start date at least 10 working days before asbestos stripping or removal work begins.
(2) For demolitions covered by paragraph (a)(2) of this section, provide the Administrator written notice of a new start date at least 10 working days before commencement of demolition. Delivery of updated notice by U.S. Postal Service, commercial delivery service, or hand delivery is acceptable.
(C) In no event shall an operation covered by this paragraph begin on a date other than the date contained in the written notice of the new start date.
(4) Include the following in the notice:
(i) An indication of whether the notice is the original or a revised notification.
(ii) Name, address, and telephone number of both the facility owner and operator and the asbestos removal contractor owner or operator.
(iii) Type of operation: demolition or renovation.
(iv) Description of the facility or affected part of the facility including the size (square meters [square feet] and number of floors), age, and present and prior use of the facility.
(v) Procedure, including analytical methods, employed to detect the presence of RACM and Category I and Category II nonfriable ACM.
(vi) Estimate of the approximate amount of RACM to be removed from the facility in terms of length of pipe in linear meters (linear feet), surface area in square meters (square feet) on other facility components, or volume in cubic meters (cubic feet) if off the facility components. Also, estimate

the approximate amount of Category I and Category II nonfriable ACM in the affected part of the facility that will not be removed before demolition.

(vii) Location and street address (including building number or name and floor or room number, if appropriate), city, county, and state, of the facility being demolished or renovated.

(viii) Scheduled starting and completion dates of asbestos removal work (or any other activity, such as site preparation that would break up, dislodge, or similarly disturb asbestos material) in a demolition or renovation; planned renovation operations involving individual nonscheduled operations shall only include the beginning and ending dates of the report period as described in paragraph (a)(4)(iii) of this section.

(ix) Scheduled starting and completion dates of demolition or renovation.

(x) Description of planned demolition or renovation work to be performed and method(s) to be employed, including demolition or renovation techniques to be used and description of affected facility components.

(xi) Description of work practices and engineering controls to be used to comply with the requirements of this subpart, including asbestos removal and waste-handling emission control procedures.

(xii) Name and location of the waste disposal site where the asbestos-containing waste material will be deposited.

(xiii) A certification that at least one person trained as required by paragraph (c)(8) of this section will supervise the stripping and removal described by this notification. This requirement shall become effective 1 year after promulgation of this regulation.

(xiv) For facilities described in paragraph (a)(3) of this section, the name, title, and authority of the State or local government representative who has ordered the demolition, the date that the order was issued, and the date on which the demolition was ordered to begin. A copy of the order shall be attached to the notification.

(xv) For emergency renovations described in paragraph (a)(4)(iv) of this section, the date and hour that the emergency occurred, a description of the sudden, unexpected event, and an explanation of how the event caused an unsafe condition, or would cause equipment damage or an unreasonable financial burden.

(xvi) Description of procedures to be followed in the event that unexpected RACM is found or Category II nonfriable ACM becomes crumbled, pulverized, or reduced to powder.

(xvii) Name, address, and telephone number of the waste transporter.

(5) The information required in paragraph (b)(4) of this section must be reported using a form similiar to that shown in Figure 3.

(c) Procedures for asbestos emission control. Each owner or operator of a demolition or renovation activity to whom this paragraph applies, according to paragraph (a) of this section, shall comply with the following procedures:

(1) Remove all RACM from a facility being demolished or renovated before any activity begins that would break up, dislodge, or similarly disturb the material or preclude access to the material for subsequent removal. RACM need not be removed before demolition if:

(i) It is Category I nonfriable ACM that is not in poor condition and is not friable.

(ii) It is on a facility component that is encased in concrete or other similarly hard material and is adequately wet whenever exposed during demolition; or

(iii) It was not accessible for testing and was, therefore, not discovered until after demolition began and, as a result of the demolition, the material cannot be safely removed. If not removed for safety reasons, the exposed RACM and any asbestos-contaminated debris must be treated as asbestos-containing waste material and adequately wet at all times until disposed of.

(iv) They are Category II nonfriable ACM and the probability is low that the materials will become crumbled, pulverized, or reduced to powder during demolition.

(2) When a facility component that contains, is covered with, or is coated with RACM is being taken out of the facility as a unit or in sections:

(i) Adequately wet all RACM exposed during cutting or disjoining operations; and

(ii) Carefully lower each unit or section to the floor and to ground level, not dropping, throwing, sliding, or otherwise damaging or disturbing the RACM.

(3) When RACM is stripped from a facility component while it remains in place in the facility, adequately wet the RACM during the stripping operation.

(i) In renovation operations, wetting is not required if:

(A) The owner or operator has obtained prior written approval from the Administrator based on a written application that wetting to comply with this paragraph would unavoidably damage equipment or present a safety hazard; and

(B) The owner or operator uses of the following emission control methods:

(1) A local exhaust ventilation and collection system designed and operated to capture the particulate asbestos material produced by the stripping and removal of the asbestos materials. The system must exhibit no visible emissions to the outside air or be designed and operated in accordance with the requirements in Sec. 61.152.

(2) A glove-bag system designed and operated to contain the particulate asbestos material produced by the stripping of the asbestos materials.

(3) Leak-tight wrapping to contain all RACM prior to dismantlement.

(ii) In renovation operations where wetting would result in equipment damage or a safety hazard, and the methods allowed in paragraph (c)(3)(i) of this section cannot be used, another method may be used after obtaining written approval from the Administrator based upon a determination that it is equivalent to wetting in controlling emissions or to the methods allowed in paragraph (c)(3)(i) of this section.

(iii) A copy of the Administrator's written approval shall be kept at the worksite and made available for inspection.

(4) After a facility component covered with, coated with, or containing RACM has been taken out of the facility as a unit or in sections pursuant to paragraph (c)(2) of this section, it shall be stripped or contained in leak-tight wrapping, except as described in paragraph (c)(5) of this section. If stripped, either:

(i) Adequately wet the RACM during stripping; or

(ii) Use a local exhaust ventilation and collection system designed and operated to capture the particulate asbestos material produced by the stripping. The system must exhibit no visible emissions to the outside air or be designed and operated in accordance with the requirements in Sec. 61.152.

(5) For large facility components such as reactor vessels, large tanks, and steam generators, but not beams (which must be handled in accordance with paragraphs (c)(2), (3), and (4) of this section), the RACM is not required to be stripped if the following requirements are met:

(i) The component is removed, transported, stored, disposed of, or reused without disturbing or damaging the RACM.

(ii) The component is encased in a leak-tight wrapping.

(iii) The leak-tight wrapping is labeled according to Sec. 61.149(d)(1)(i), (ii), and (iii) during all loading and unloading operations and during storage.

(6) For all RACM, including material that has been removed or stripped:

(i) Adequately wet the material and ensure that it remains wet until collected and contained or treated in preparation for disposal in accordance with Sec. 61.150; and
(ii) Carefully lower the material to the ground and floor, not dropping, throwing, sliding, or otherwise damaging or disturbing the material.
(iii) Transport the material to the ground via leak-tight chutes or containers if it has been removed or stripped more than 50 feet above ground level and was not removed as units or in sections.
(iv) RACM contained in leak-tight wrapping that has been removed in accordance with paragraphs (c)(4) and (c)(3)(i)(B)(3) of this section need not be wetted.
(7) When the temperature at the point of wetting is below 0 [deg]C (32 [deg]F):
(i) The owner or operator need not comply with paragraph (c)(2)(i) and the wetting provisions of paragraph (c)(3) of this section.
(ii) The owner or operator shall remove facility components containing, coated with, or covered with RACM as units or in sections to the maximum extent possible.
(iii) During periods when wetting operations are suspended due to freezing temperatures, the owner or operator must record the temperature in the area containing the facility components at the beginning, middle, and end of each workday and keep daily temperature records available for inspection by the Administrator during normal business hours at the demolition or renovation site. The owner or operator shall retain the temperature records for at least 2 years.
(8) Effective 1 year after promulgation of this regulation, no RACM shall be stripped, removed, or otherwise handled or disturbed at a facility regulated by this section unless at least one on-site representative, such as a foreman or management-level person or other authorized representative, trained in the provisions of this regulation and the means of complying with them, is present. Every 2 years, the trained on-site individual shall receive refresher training in the provisions of this regulation. The required training shall include as a minimum: applicability; notifications; material identification; control procedures for removals including, at least, wetting, local exhaust ventilation, negative pressure enclosures, glove-bag procedures, and High Efficiency Particulate Air (HEPA) filters; waste disposal work practices; reporting and recordkeeping; and asbestos hazards and worker protection. Evidence that the required training has been completed shall be posted and made available for inspection by the Administrator at the demolition or renovation site.
(9) For facilities described in paragraph (a)(3) of this section, adequately wet the portion of the facility that contains RACM during the wrecking operation.
(10) If a facility is demolished by intentional burning, all RACM including Category I and Category II nonfriable ACM must be removed in accordance with the NESHAP before burning.

The Milner Butte Landfill does not perform demolition or renovation.

[55 FR 48419, Nov. 20, 1990; 56 FR 1669, Jan. 16, 1991]

Sec. 61.146 Standard for spraying.

The owner or operator of an operation in which asbestos-containing materials are spray applied shall comply with the following requirements:
(a) For spray-on application on buildings, structures, pipes, and conduits, do not use material containing more than 1 percent asbestos as determined

using the method specified in appendix E, subpart E, 40 CFR part 763, section 1, Polarized Light Microscopy, except as provided in paragraph (c) of this section.

(b) For spray-on application of materials that contain more than 1 percent asbestos as determined using the method specified in appendix E, subpart E, 40 CFR part 763, section 1, Polarized Light Microscopy, on equipment and machinery, except as provided in paragraph (c) of this section:

(1) Notify the Administrator at least 20 days before beginning the spraying operation. Include the following information in the notice:

(i) Name and address of owner or operator.

(ii) Location of spraying operation.

(iii) Procedures to be followed to meet the requirements of this paragraph.

(2) Discharge no visible emissions to the outside air from spray-on application of the asbestos-containing material or use the methods specified by Sec. 61.152 to clean emissions containing particulate asbestos material before they escape to, or are vented to, the outside air.

(c) The requirements of paragraphs (a) and (b) of this section do not apply to the spray-on application of materials where the asbestos fibers in the materials are encapsulated with a bituminous or resinous binder during spraying and the materials are not friable after drying.

(d) Owners or operators of sources subject to this paragraph are exempt from the requirements of Sec. Sec. 61.05(a), 61.07 and 61.09.

[49 FR 13661, Apr. 5, 1984. Redesignated and amended at 55 FR 48424, Nov. 20, 1990; 60 FR 31920, June 19, 1995]

The Milner Butte Landfill does not perform asbestos containing material spraying.

Sec. 61.147 Standard for fabricating.

(a) Applicability. This section applies to the following fabricating operations using commercial asbestos:

(1) The fabrication of cement building products.

(2) The fabrication of friction products, except those operations that primarily install asbestos friction materials on motor vehicles.

(3) The fabrication of cement or silicate board for ventilation hoods; ovens; electrical panels; laboratory furniture, bulkheads, partitions, and ceilings for marine construction; and flow control devices for the molten metal industry.

(b) Standard. Each owner or operator of any of the fabricating operations to which this section applies shall either:

(1) Discharge no visible emissions to the outside air from any of the operations or from any building or structure in which they are conducted or from any other fugitive sources; or

(2) Use the methods specified by Sec. 61.152 to clean emissions containing particulate asbestos material before they escape to, or are vented to, the outside air.

(3) Monitor each potential source of asbestos emissions from any part of the fabricating facility, including air cleaning devices, process equipment, and buildings that house equipment for material processing and handling, at least once each day, during daylight hours, for visible emissions to the outside air during periods of operation. The monitoring shall be by visual observation of at least 15 seconds duration per source of emissions.

(4) Inspect each air cleaning device at least once each week for proper operation and for changes that signal the potential for malfunctions, including, to the maximum extent possible without dismantling other than

opening the device, the presence of tears, holes, and abrasions in filter bags and for dust deposits on the clean side of bags. For air cleaning devices that cannot be inspected on a weekly basis according to this paragraph, submit to the Administrator, and revise as necessary, a written maintenance plan to include, at a minimum, the following:

(i) Maintenance schedule.

(ii) Recordkeeping plan.

(5) Maintain records of the results of visible emission monitoring and air cleaning device inspections using a format similar to that shown in Figures 1 and 2 and include the following:

(i) Date and time of each inspection.

(ii) Presence or absence of visible emissions.

(iii) Condition of fabric filters, including presence of any tears, holes, and abrasions.

(iv) Presence of dust deposits on clean side of fabric filters.

(v) Brief description of corrective actions taken, including date and time.

(vi) Daily hours of operation for each air cleaning device.

(6) Furnish upon request and make available at the affected facility during normal business hours for inspection by the Administrator, all records required under this section.

(7) Retain a copy of all monitoring and inspection records for at least 2 years.

(8) Submit semiannually a copy of the visible emission monitoring records to the Administrator if visible emission occurred during the report period. Semiannual reports shall be postmarked by the 30th day following the end of the six-month period.

The Milner Butte Landfill does not perform fabrication with asbestos containing materials.

[49 FR 13661, Apr. 5, 1984. Redesignated and amended at 55 FR 48424, Nov. 20, 1991; 64 FR 7467, Feb. 12, 1999]

Sec. 61.148 Standard for insulating materials.

No owner or operator of a facility may install or reinstall on a facility component any insulating materials that contain commercial asbestos if the materials are either molded and friable or wet-applied and friable after drying. The provisions of this section do not apply to spray-applied insulating materials regulated under Sec. 61.146.

The Milner Butte Landfill acknowledges the standard for insulating materials.

[55 FR 48424, Nov. 20, 1990]

Sec. 61.149 Standard for waste disposal for asbestos mills.

Each owner or operator of any source covered under the provisions of Sec. 61.142 shall:

(a) Deposit all asbestos-containing waste material at a waste disposal site operated in accordance with the provisions of Sec. 61.154; and

(b) Discharge no visible emissions to the outside air from the transfer of control device asbestos waste to the tailings conveyor, or use the methods specified by Sec. 61.152 to clean emissions containing particulate asbestos material before they escape to, or are vented to, the outside air. Dispose of the asbestos waste from control devices in accordance with Sec. 61.150(a) or paragraph (c) of this section; and

(c) Discharge no visible emissions to the outside air during the collection, processing, packaging, or on-site transporting of any asbestos-containing waste material, or use one of the disposal methods specified in paragraphs (c) (1) or (2) of this section, as follows:

(1) Use a wetting agent as follows:

(i) Adequately mix all asbestos-containing waste material with a wetting agent recommended by the manufacturer of the agent to effectively wet dust and tailings, before depositing the material at a waste disposal site. Use the agent as recommended for the particular dust by the manufacturer of the agent.

(ii) Discharge no visible emissions to the outside air from the wetting operation or use the methods specified by Sec. 61.152 to clean emissions containing particulate asbestos material before they escape to, or are vented to, the outside air.

(iii) Wetting may be suspended when the ambient temperature at the waste disposal site is less than -9.5 [deg]C (15 [deg]F), as determined by an appropriate measurement method with an accuracy of <plus-minus<ls-thn-eq>1 [deg]C (<plus-minus<ls-thn-eq>2 [deg]F). During periods when wetting operations are suspended, the temperature must be recorded at least at hourly intervals, and records must be retained for at least 2 years in a form suitable for inspection.

(2) Use an alternative emission control and waste treatment method that has received prior written approval by the Administrator. To obtain approval for an alternative method, a written application must be submitted to the Administrator demonstrating that the following criteria are met:

(i) The alternative method will control asbestos emissions equivalent to currently required methods.

(ii) The suitability of the alternative method for the intended application.

(iii) The alternative method will not violate other regulations.

(iv) The alternative method will not result in increased water pollution, land pollution, or occupational hazards.

(d) When waste is transported by vehicle to a disposal site:

(1) Mark vehicles used to transport asbestos-containing waste material during the loading and unloading of the waste so that the signs are visible. The markings must:

(i) Be displayed in such a manner and location that a person can easily read the legend.

(ii) Conform to the requirements for 51 cm x 36 cm (20 in x 14 in) upright format signs specified in 29 CFR 1910.145(d)(4) and this paragraph; and

(iii) Display the following legend in the lower panel with letter sizes and styles of a visibility at least equal to those specified in this paragraph.

Legend

DANGER

ASBESTOS DUST HAZARD

CANCER AND LUNG DISEASE HAZARD

Authorized Personnel Only

Notation

2.5 cm (1 inch) Sans Serif, Gothic or Block

2.5 cm (1 inch) Sans Serif, Gothic or Block

1.9 cm (3/4 inch) Sans Serif, Gothic or Block

14 Point Gothic

Spacing between any two lines must be a least equal to the height of the upper of the two lines.

(2) For off-site disposal, provide a copy of the waste shipment record, described in paragraph (e)(1) of this section, to the disposal site owner or operator at the same time as the asbestos-containing waste material is delivered to the disposal site.

(e) For all asbestos-containing waste material transported off the facility site:

(1) Maintain asbestos waste shipment records, using a form similar to that shown in Figure 4, and include the following information:

(i) The name, address, and telephone number of the waste generator.

(ii) The name and address of the local, State, or EPA Regional agency responsible for administering the asbestos NESHAP program.

(iii) The quantity of the asbestos-containing waste material in cubic meters (cubic yards).

(iv) The name and telephone number of the disposal site operator.

(v) The name and physical site location of the disposal site.

(vi) The date transported.

(vii) The name, address, and telephone number of the transporter(s).

(viii) A certification that the contents of this consignment are fully and accurately described by proper shipping name and are classified, packed, marked, and labeled, and are in all respects in proper condition for transport by highway according to applicable international and government regulations.

(2) For waste shipments where a copy of the waste shipment record, signed by the owner or operator of the designated disposal site, is not received by the waste generator within 35 days of the date the waste was accepted by the initial transporter, contact the transporter and/or the owner or operator of the designated disposal site to determine the status of the waste shipment.

(3) Report in writing to the local, State, or EPA Regional office responsible for administering the asbestos NESHAP program for the waste generator if a copy of the waste shipment record, signed by the owner or operator of the designated waste disposal site, is not received by the waste generator within 45 days of the date the waste was accepted by the initial transporter. Include in the report the following information:

(i) A copy of the waste shipment record for which a confirmation of delivery was not received, and

(ii) A cover letter signed by the waste generator explaining the efforts taken to locate the asbestos waste shipment and the results of those efforts.

(4) Retain a copy of all waste shipment records, including a copy of the waste shipment record signed by the owner or operator of the designated waste disposal site, for at least 2 years.

(f) Furnish upon request, and make available for inspection by the Administrator, all records required under this section.

The Milner Butte Landfill is not an asbestos mill.

Sec. 61.150 Standard for waste disposal for manufacturing, fabricating, demolition, renovation, and spraying operations.

Each owner or operator of any source covered under the provisions of Sec. Sec. 61.144, 61.145, 61.146, and 61.147 shall comply with the following provisions:

(a) Discharge no visible emissions to the outside air during the collection, processing (including incineration), packaging, or transporting of any asbestos-containing waste material generated by the source, or use one of the emission control and waste treatment methods specified in paragraphs (a) (1) through (4) of this section.

(1) Adequately wet asbestos-containing waste material as follows:

(i) Mix control device asbestos waste to form a slurry; adequately wet other asbestos-containing waste material; and

(ii) Discharge no visible emissions to the outside air from collection, mixing, wetting, and handling operations, or use the methods specified by Sec. 61.152 to clean emissions containing particulate asbestos material before they escape to, or are vented to, the outside air; and

(iii) After wetting, seal all asbestos-containing waste material in leak-tight containers while wet; or, for materials that will not fit into containers without additional breaking, put materials into leak-tight wrapping; and

(iv) Label the containers or wrapped materials specified in paragraph (a)(1)(iii) of this section using warning labels specified by Occupational Safety and Health Standards of the Department of Labor, Occupational Safety and Health Administration (OSHA) under 29 CFR 1910.1001(j)(4) or 1926.1101(k)(8). The labels shall be printed in letters of sufficient size and contrast so as to be readily visible and legible.

(v) For asbestos-containing waste material to be transported off the facility site, label containers or wrapped materials with the name of the waste generator and the location at which the waste was generated.

(2) Process asbestos-containing waste material into nonfriable forms as follows:

(i) Form all asbestos-containing waste material into nonfriable pellets or other shapes;

(ii) Discharge no visible emissions to the outside air from collection and processing operations, including incineration, or use the method specified by Sec. 61.152 to clean emissions containing particulate asbestos material before they escape to, or are vented to, the outside air.

(3) For facilities demolished where the RACM is not removed prior to demolition according to Sec. Sec. 61.145(c)(1) (i), (ii), (iii), and (iv) or for facilities demolished according to Sec. 61.145(c)(9), adequately wet asbestos-containing waste material at all times after demolition and keep wet during handling and loading for transport to a disposal site. Asbestos-containing waste materials covered by this paragraph do not have to be sealed in leak-tight containers or wrapping but may be transported and disposed of in bulk.

(4) Use an alternative emission control and waste treatment method that has received prior approval by the Administrator according to the procedure described in Sec. 61.149(c)(2).

(5) As applied to demolition and renovation, the requirements of paragraph (a) of this section do not apply to Category I nonfriable ACM waste and Category II nonfriable ACM waste that did not become crumbled, pulverized, or reduced to powder.

(b) All asbestos-containing waste material shall be deposited as soon as is practical by the waste generator at:

(1) A waste disposal site operated in accordance with the provisions of Sec. 61.154, or

(2) An EPA-approved site that converts RACM and asbestos-containing waste material into nonasbestos (asbestos-free) material according to the provisions of Sec. 61.155.

(3) The requirements of paragraph (b) of this section do not apply to Category I nonfriable ACM that is not RACM.

(c) Mark vehicles used to transport asbestos-containing waste material during the loading and unloading of waste so that the signs are visible. The markings must conform to the requirements of Sec. Sec. 61.149(d)(1) (i), (ii), and (iii).

(d) For all asbestos-containing waste material transported off the facility site:

(1) Maintain waste shipment records, using a form similar to that shown in Figure 4, and include the following information:

(i) The name, address, and telephone number of the waste generator.

(ii) The name and address of the local, State, or EPA Regional office responsible for administering the asbestos NESHAP program.

(iii) The approximate quantity in cubic meters (cubic yards).

(iv) The name and telephone number of the disposal site operator.

(v) The name and physical site location of the disposal site.

(vi) The date transported.

(vii) The name, address, and telephone number of the transporter(s).

(viii) A certification that the contents of this consignment are fully and accurately described by proper shipping name and are classified, packed, marked, and labeled, and are in all respects in proper condition for transport by highway according to applicable international and government regulations.

(2) Provide a copy of the waste shipment record, described in paragraph (d)(1) of this section, to the disposal site owners or operators at the same time as the asbestos-containing waste material is delivered to the disposal site.

(3) For waste shipments where a copy of the waste shipment record, signed by the owner or operator of the designated disposal site, is not received by the waste generator within 35 days of the date the waste was accepted by the initial transporter, contact the transporter and/or the owner or operator of the designated disposal site to determine the status of the waste shipment.

(4) Report in writing to the local, State, or EPA Regional office responsible for administering the asbestos NESHAP program for the waste generator if a copy of the waste shipment record, signed by the owner or operator of the designated waste disposal site, is not received by the waste generator within 45 days of the date the waste was accepted by the initial transporter. Include in the report the following information:

(i) A copy of the waste shipment record for which a confirmation of delivery was not received, and

(ii) A cover letter signed by the waste generator explaining the efforts taken to locate the asbestos waste shipment and the results of those efforts.

(5) Retain a copy of all waste shipment records, including a copy of the waste shipment record signed by the owner or operator of the designated waste disposal site, for at least 2 years.

(e) Furnish upon request, and make available for inspection by the Administrator, all records required under this section.

The Milner Butte Landfill does not manufacture, fabricate, demolish, renovate or spray with asbestos containing materials.

[55 FR 48429, Nov. 20, 1990; 56 FR 1669, Jan. 16, 1991, as amended at 68 FR 54793, Sept. 18, 2003]

Sec. 61.151 Standard for inactive waste disposal sites for asbestos mills and manufacturing and fabricating operations.

Each owner or operator of any inactive waste disposal site that was operated by sources covered under Sec. 61.142, 61.144, or 61.147 and received deposits of asbestos-containing waste material generated by the sources, shall:

(a) Comply with one of the following:

(1) Either discharge no visible emissions to the outside air from an inactive waste disposal site subject to this paragraph; or

(2) Cover the asbestos-containing waste material with at least 15 centimeters (6 inches) of compacted nonasbestos-containing material, and grow and maintain a cover of vegetation on the area adequate to prevent exposure of the asbestos-containing waste material. In desert areas where vegetation would be difficult to maintain, at least 8 additional centimeters (3 inches) of well-graded, nonasbestos crushed rock may be placed on top of the final cover instead of vegetation and maintained to prevent emissions; or

(3) Cover the asbestos-containing waste material with at least 60 centimeters (2 feet) of compacted nonasbestos-containing material, and maintain it to prevent exposure of the asbestos-containing waste; or

(4) For inactive waste disposal sites for asbestos tailings, a resinous or petroleum-based dust suppression agent that effectively binds dust to control surface air emissions may be used instead of the methods in paragraphs (a)(1), (2), and (3) of this section. Use the agent in the manner and frequency recommended for the particular asbestos tailings by the manufacturer of the dust suppression agent to achieve and maintain dust control. Obtain prior written approval of the Administrator to use other equally effective dust suppression agents. For purposes of this paragraph, any used, spent, or other waste oil is not considered a dust suppression agent.

(b) Unless a natural barrier adequately deters access by the general public, install and maintain warning signs and fencing as follows, or comply with paragraph (a)(2) or (a)(3) of this section.

(1) Display warning signs at all entrances and at intervals of 100 m (328 ft) or less along the property line of the site or along the perimeter of the sections of the site where asbestos-containing waste material was deposited. The warning signs must:

(i) Be posted in such a manner and location that a person can easily read the legend; and

(ii) Conform to the requirements for 51 cmx36 cm (20<gr-thn-eq>x14<gr-thn-eq>) upright format signs specified in 29 CFR 1910.145(d)(4) and this paragraph; and

(iii) Display the following legend in the lower panel with letter sizes and styles of a visibility at least equal to those specified in this paragraph.

Legend	Notation
Asbestos Waste Disposal Site.....	2.5 cm (1 inch) Sans Serif, Gothic or Block
Do Not Create Dust.....	1.9 cm (3/4 inch) Sans Serif, Gothic or Block
Breathing Asbestos is Hazardous to Your Health.	14 Point Gothic.

Spacing between any two lines must be at least equal to the height of the upper of the two lines.

(2) Fence the perimeter of the site in a manner adequate to deter access by the general public.
(3) When requesting a determination on whether a natural barrier adequately deters public access, supply information enabling the Administrator to determine whether a fence or a natural barrier adequately deters access by the general public.
(c) The owner or operator may use an alternative control method that has received prior approval of the Administrator rather than comply with the requirements of paragraph (a) or (b) of this section.
(d) Notify the Administrator in writing at least 45 days prior to excavating or otherwise disturbing any asbestos-containing waste material that has been deposited at a waste disposal site under this section, and follow the procedures specified in the notification. If the excavation will begin on a date other than the one contained in the original notice, notice of the new start date must be provided to the Administrator at least 10 working days before excavation begins and in no event shall excavation begin earlier than the date specified in the original notification. Include the following information in the notice:
(1) Scheduled starting and completion dates.
(2) Reason for disturbing the waste.
(3) Procedures to be used to control emissions during the excavation, storage, transport, and ultimate disposal of the excavated asbestos-containing waste material. If deemed necessary, the Administrator may require changes in the emission control procedures to be used.
(4) Location of any temporary storage site and the final disposal site.
(e) Within 60 days of a site becoming inactive and after the effective date of this subpart, record, in accordance with State law, a notation on the deed to the facility property and on any other instrument that would normally be examined during a title search; this notation will in perpetuity notify any potential purchaser of the property that:
(1) The land has been used for the disposal of asbestos-containing waste material;
(2) The survey plot and record of the location and quantity of asbestos-containing waste disposed of within the disposal site required in Sec. 61.154(f) have been filed with the Administrator; and
(3) The site is subject to 40 CFR part 61, subpart M.

The Milner Butte Landfill is not an inactive waste disposal site for an asbestos mill, manufacturing or fabrication operation.

[49 FR 13661, Apr. 5, 1984, as amended at 53 FR 36972, Sept. 23, 1988. Redesignated and amended at 55 FR 48429, Nov. 20, 1990]

Sec. 61.152 Air-cleaning.

(a) The owner or operator who uses air cleaning, as specified in Sec. Sec. 61.142(a), 61.144(b)(2), 61.145(c)(3)(i)(B)(1), 61.145(c)(4)(ii), 61.145(c)(11)(i), 61.146(b)(2), 61.147(b)(2), 61.149(b), 61.149(c)(1)(ii), 61.150(a)(1)(ii), 61.150(a)(2)(ii), and 61.155(e) shall:
(1) Use fabric filter collection devices, except as noted in paragraph (b) of this section, doing all of the following:
(i) Ensuring that the airflow permeability, as determined by ASTM Method D737-75, does not exceed 9 m\3\/min/m\2\ (30 ft\3\/min/ft\2\) for woven fabrics or 11\3\/min/m\2\(35 ft\3\/min/ft\2\) for felted fabrics, except that 12 m\3\/min/m\2\ (40 ft\3\min/ft\2\) for woven and 14 m\3\/min/m\2\ (45 ft \3\min/ft\2\) for felted fabrics is allowed for filtering air from asbestos ore dryers; and

(ii) Ensuring that felted fabric weighs at least 475 grams per square meter (14 ounces per square yard) and is at least 1.6 millimeters (one-sixteenth inch) thick throughout; and

(iii) Avoiding the use of synthetic fabrics that contain fill yarn other than that which is spun.

(2) Properly install, use, operate, and maintain all air-cleaning equipment authorized by this section. Bypass devices may be used only during upset or emergency conditions and then only for so long as it takes to shut down the operation generating the particulate asbestos material.

(3) For fabric filter collection devices installed after January 10, 1989, provide for easy inspection for faulty bags.

(b) There are the following exceptions to paragraph (a)(1):

(1) After January 10, 1989, if the use of fabric creates a fire or explosion hazard, or the Administrator determines that a fabric filter is not feasible, the Administrator may authorize as a substitute the use of wet collectors designed to operate with a unit contacting energy of at least 9.95 kilopascals (40 inches water gage pressure).

(2) Use a HEPA filter that is certified to be at least 99.97 percent efficient for 0.3 micron particles.

(3) The Administrator may authorize the use of filtering equipment other than described in paragraphs (a)(1) and (b)(1) and (2) of this section if the owner or operator demonstrates to the Administrator's satisfaction that it is equivalent to the described equipment in filtering particulate asbestos material.

[49 FR 13661, Apr. 5, 1984; 49 FR 25453, June 21, 1984, as amended at 51 FR 8199, Mar. 10, 1986. Redesignated and amended at 55 FR 48430, Nov. 20, 1990]

The Milner Butte Landfill does not perform air cleaning.

Sec. 61.153 Reporting.

(a) Any new source to which this subpart applies (with the exception of sources subject to Sec. 61.143, 61.145, 61.146, and 61.148), which has an initial startup date preceding the effective date of this revision, shall provide the following information to the Administrator postmarked or delivered within 90 days of the effective date. In the case of a new source that does not have an initial startup date preceding the effective date, the information shall be provided, postmarked or delivered, within 90 days of the initial startup date. Any owner or operator of an existing source shall provide the following information to the Administrator within 90 days of the effective date of this subpart unless the owner or operator of the existing source has previously provided this information to the Administrator. Any changes in the information provided by any existing source shall be provided to the Administrator, postmarked or delivered, within 30 days after the change.

The Milner Butte Landfill has previously provided this information to the Administrator.

(1) A description of the emission control equipment used for each process; and

(i) If the fabric device uses a woven fabric, the airflow permeability in m\3\/min/m\2\ and; if the fabric is synthetic, whether the fill yarn is spun or not spun; and

(ii) If the fabric filter device uses a felted fabric, the density in g/m\2\, the minimum thickness in inches, and the airflow permeability in m\3\/min/m\2\.
(2) If a fabric filter device is used to control emissions,
(i) The airflow permeability in m\3\/min/m\2\ (ft\3\/min/ft\2\) if the fabric filter device uses a woven fabric, and, if the fabric is synthetic, whether the fill yarn is spun or not spun; and
(ii) If the fabric filter device uses a felted fabric, the density in g/m\2\ (oz/yd\2\), the minimum thickness in millimeters (inches), and the airflow permeability in m\3\/min/m\2\ (ft\3\/min/ft\2\).
(3) If a HEPA filter is used to control emissions, the certified efficiency.
(4) For sources subject to Sec. Sec. 61.149 and 61.150:
(i) A brief description of each process that generates asbestos-containing waste material; and
(ii) The average volume of asbestos-containing waste material disposed of, measured in m\3\/day (yd\3\/day); and
(iii) The emission control methods used in all stages of waste disposal; and
(iv) The type of disposal site or incineration site used for ultimate disposal, the name of the site operator, and the name and location of the disposal site.

The Milner Butte Landfill does not perform air cleaning or generate asbestos containing waste materials.

(5) For sources subject to Sec. Sec. 61.151 and 61.154:
(i) A brief description of the site; and
(ii) The method or methods used to comply with the standard, or alternative procedures to be used.
(b) The information required by paragraph (a) of this section must accompany the information required by Sec. 61.10. Active waste disposal sites subject to Sec. 61.154 shall also comply with this provision. Roadways, demolition and renovation, spraying, and insulating materials are exempted from the requirements of Sec. 61.10(a). The information described in this section must be reported using the format of appendix A of this part as a guide.

The Milner Butte Landfill is an active waste disposal site and is subject to 61.154 and will include the information required by Sec 61.10 and paragraph (a) of this section using the format of appendix A of this part.

(Sec. 114. Clean Air Act as amended (42 U.S.C. 7414))

[49 FR 13661, Apr. 5, 1984. Redesignated and amended at 55 FR 48430, Nov. 20, 1990; 56 FR 1669, Jan. 16, 1991]

Sec. 61.154 Standard for active waste disposal sites.

Each owner or operator of an active waste disposal site that receives asbestos-containing waste material from a source covered under Sec. 61.149, 61.150, or 61.155 shall meet the requirements of this section:
(a) Either there must be no visible emissions to the outside air from any active waste disposal site where asbestos-containing waste material has been deposited, or the requirements of paragraph (c) or (d) of this section must be met.

The Milner Butte Landfill is an active waste disposal site that receives asbestos containing waste materials. The Milner Butte Landfill will follow the requirements of paragraph (c) of this section.

(b) Unless a natural barrier adequately deters access by the general public, either warning signs and fencing must be installed and maintained as follows, or the requirements of paragraph (c)(1) of this section must be met.
(1) Warning signs must be displayed at all entrances and at intervals of 100 m (330 ft) or less along the property line of the site or along the perimeter of the sections of the site where asbestos-containing waste material is deposited. The warning signs must:
(i) Be posted in such a manner and location that a person can easily read the legend; and
(ii) Conform to the requirements of 51 cm x 36 cm (20<gr-thn-eq>x14<gr-thn-eq>) upright format signs specified in 29 CFR 1910.145(d)(4) and this paragraph; and
(iii) Display the following legend in the lower panel with letter sizes and styles of a visibility at least equal to those specified in this paragraph.

Legend	Notation
Asbestos Waste Disposal Site	2.5 cm (1 inch) Sans Serif, Gothic or Block.
Do Not Create Dust	1.9 cm (3/4 inch) Sans Serif, Gothic or Block.
Breathing Asbestos is Hazardous to Your Health.	14 Point Gothic.

Spacing between any two lines must be at least equal to the height of the upper of the two lines.
(2) The perimeter of the disposal site must be fenced in a manner adequate to deter access by the general public.
(3) Upon request and supply of appropriate information, the Administrator will determine whether a fence or a natural barrier adequately deters access by the general public.

The Milner Butte Landfill has a perimeter fence around the disposal site to deter access by the general public and will follow the requirements of paragraph (c) of this section.

(c) Rather than meet the no visible emission requirement of paragraph (a) of this section, at the end of each operating day, or at least once every 24-hour period while the site is in continuous operation, the asbestos-containing waste material that has been deposited at the site during the operating day or previous 24-hour period shall:
(1) Be covered with at least 15 centimeters (6 inches) of compacted nonasbestos-containing material, or
(2) Be covered with a resinous or petroleum-based dust suppression agent that effectively binds dust and controls wind erosion. Such an agent shall be used in the manner and frequency recommended for the particular dust by the dust suppression agent manufacturer to achieve and maintain dust control. Other equally effective dust suppression agents may be used upon prior approval by the Administrator. For purposes of this paragraph, any used, spent, or other waste oil is not considered a dust suppression agent.

The Milner Butte Landfill will follow the conditions of (c)(1) in lieu of meeting the no visible emissions requirement of paragraph (a).

(d) Rather than meet the no visible emission requirement of paragraph (a) of this section, use an alternative emissions control method that has received prior written approval by the Administrator according to the procedures described in Sec. 61.149(c)(2).

The Milner Butte Landfill will follow the requirements of paragraph (c)(1).

(e) For all asbestos-containing waste material received, the owner or operator of the active waste disposal site shall:
(1) Maintain waste shipment records, using a form similar to that shown in Figure 4, and include the following information:
(i) The name, address, and telephone number of the waste generator.
(ii) The name, address, and telephone number of the transporter(s).
(iii) The quantity of the asbestos-containing waste material in cubic meters (cubic yards).
(iv) The presence of improperly enclosed or uncovered waste, or any asbestos-containing waste material not sealed in leak-tight containers. Report in writing to the local, State, or EPA Regional office responsible for administering the asbestos NESHAP program for the waste generator (identified in the waste shipment record), and, if different, the local, State, or EPA Regional office responsible for administering the asbestos NESHAP program for the disposal site, by the following working day, the presence of a significant amount of improperly enclosed or uncovered waste. Submit a copy of the waste shipment record along with the report.
(v) The date of the receipt.

The Milner Butte Landfill acknowledges the above requirements for maintaining waste shipment records and will continue to do so.

(2) As soon as possible and no longer than 30 days after receipt of the waste, send a copy of the signed waste shipment record to the waste generator.

The Milner Butte Landfill acknowledges the above requirement to send a copy of the signed waste shipment record to the waste generator within 30 days after receipt of the waste.

(3) Upon discovering a discrepancy between the quantity of waste designated on the waste shipment records and the quantity actually received, attempt to reconcile the discrepancy with the waste generator. If the discrepancy is not resolved within 15 days after receiving the waste, immediately report in writing to the local, State, or EPA Regional office responsible for administering the asbestos NESHAP program for the waste generator (identified in the waste shipment record), and, if different, the local, State, or EPA Regional office responsible for administering the asbestos NESHAP program for the disposal site. Describe the discrepancy and attempts to reconcile it, and submit a copy of the waste shipment record along with the report.

The Milner Butte Landfill acknowledges the above requirements for discovering a discrepancy between the quantity of waste designated on the waste shipment records and the quantity actually received.

(4) Retain a copy of all records and reports required by this paragraph for at least 2 years.

The Milner Butte Landfill acknowledges the above requirements for retaining copies of all records and reports required by this paragraph for at least 2 years and will continue to do so.

(f) Maintain, until closure, records of the location, depth and area, and quantity in cubic meters (cubic yards) of asbestos-containing waste material within the disposal site on a map or diagram of the disposal area.

The Milner Butte Landfill will maintain, until closure, the records required above.

(g) Upon closure, comply with all the provisions of Sec. 61.151.

The Milner Butte Landfill will comply with the provisions of Section 61.151 upon closure.

(h) Submit to the Administrator, upon closure of the facility, a copy of records of asbestos waste disposal locations and quantities.

The Milner Butte Landfill will submit records of asbestos waste disposal to the Administrator upon closure.

(i) Furnish upon request, and make available during normal business hours for inspection by the Administrator, all records required under this section.

The Milner Butte Landfill will furnish upon request all records required under this section.

(j) Notify the Administrator in writing at least 45 days prior to excavating or otherwise disturbing any asbestos-containing waste material that has been deposited at a waste disposal site and is covered. If the excavation will begin on a date other than the one contained in the original notice, notice of the new start date must be provided to the Administrator at least 10 working days before excavation begins and in no event shall excavation begin earlier than the date specified in the original notification. Include the following information in the notice:
(1) Scheduled starting and completion dates.
(2) Reason for disturbing the waste.
(3) Procedures to be used to control emissions during the excavation, storage, transport, and ultimate disposal of the excavated asbestos-containing waste material. If deemed necessary, the Administrator may require changes in the emission control procedures to be used.
(4) Location of any temporary storage site and the final disposal site.

The Milner Butte Landfill will provide the proper notification to the Administration at least 45 days prior to excavating or otherwise disturbing any asbestos-containing waste material.

(Secs. 112 and 301(a) of the Clean Air Act as amended (42 U.S.C. 7412, 7601(a))

[49 FR 13661, Apr. 5, 1990. Redesignated and amended at 55 FR 48431, Nov. 20, 1990; 56 FR 1669, Jan. 16, 1991]

Sec. 61.155 Standard for operations that convert asbestos-containing waste material into nonasbestos (asbestos-free) material.

Each owner or operator of an operation that converts RACM and asbestos-containing waste material into nonasbestos (asbestos-free) material shall:

(a) Obtain the prior written approval of the Administrator to construct the facility. To obtain approval, the owner or operator shall provide the Administrator with the following information:

(1) Application to construct pursuant to Sec. 61.07.

(2) In addition to the information requirements of Sec. 61.07(b)(3), a

(i) Description of waste feed handling and temporary storage.

(ii) Description of process operating conditions.

(iii) Description of the handling and temporary storage of the end product.

(iv) Description of the protocol to be followed when analyzing output materials by transmission electron microscopy.

(3) Performance test protocol, including provisions for obtaining information required under paragraph (b) of this section.

(4) The Administrator may require that a demonstration of the process be performed prior to approval of the application to construct.

(b) Conduct a start-up performance test. Test results shall include:

(1) A detailed description of the types and quantities of nonasbestos material, RACM, and asbestos-containing waste material processed, e.g., asbestos cement products, friable asbestos insulation, plaster, wood, plastic, wire, etc. Test feed is to include the full range of materials that will be encountered in actual operation of the process.

(2) Results of analyses, using polarized light microscopy, that document the asbestos content of the wastes processed.

(3) Results of analyses, using transmission electron microscopy, that document that the output materials are free of asbestos. Samples for analysis are to be collected as 8-hour composite samples (one 200-gram (7-ounce) sample per hour), beginning with the initial introduction of RACM or asbestos-containing waste material and continuing until the end of the performance test.

(4) A description of operating parameters, such as temperature and residence time, defining the full range over which the process is expected to operate to produce nonasbestos (asbestos-free) materials. Specify the limits for each operating parameter within which the process will produce nonasbestos (asbestos-free) materials.

(5) The length of the test.

(c) During the initial 90 days of operation,

(1) Continuously monitor and log the operating parameters identified during start-up performance tests that are intended to ensure the production of nonasbestos (asbestos-free) output material.

(2) Monitor input materials to ensure that they are consistent with the test feed materials described during start-up performance tests in paragraph (b)(1) of this section.

(3) Collect and analyze samples, taken as 10-day composite samples (one 200-gram (7-ounce) sample collected every 8 hours of operation) of all output material for the presence of asbestos. Composite samples may be for fewer than 10 days. Transmission electron microscopy (TEM) shall be used to analyze the output material for the presence of asbestos. During the initial 90-day period, all output materials must be stored on-site until analysis shows the material to be asbestos-free or disposed of as asbestos-containing waste material according to Sec. 61.150.

(d) After the initial 90 days of operation,

(1) Continuously monitor and record the operating parameters identified during start-up performance testing and any subsequent performance testing. Any output produced during a period of deviation from the range of operating conditions established to ensure the production of nonasbestos (asbestos-free) output materials shall be:

(i) Disposed of as asbestos-containing waste material according to Sec. 61.150, or

(ii) Recycled as waste feed during process operation within the established range of operating conditions, or

(iii) Stored temporarily on-site in a leak-tight container until analyzed for asbestos content. Any product material that is not asbestos-free shall be either disposed of as asbestos-containing waste material or recycled as waste feed to the process.

(2) Collect and analyze monthly composite samples (one 200-gram (7-ounce) sample collected every 8 hours of operation) of the output material. Transmission electron microscopy shall be used to analyze the output material for the presence of asbestos.

(e) Discharge no visible emissions to the outside air from any part of the operation, or use the methods specified by Sec. 61.152 to clean emissions containing particulate asbestos material before they escape to, or are vented to, the outside air.

(f) Maintain records on-site and include the following information:

(1) Results of start-up performance testing and all subsequent performance testing, including operating parameters, feed characteristic, and analyses of output materials.

(2) Results of the composite analyses required during the initial 90 days of operation under Sec. 61.155(c).

(3) Results of the monthly composite analyses required under Sec. 61.155(d).

(4) Results of continuous monitoring and logs of process operating parameters required under Sec. 61.155 (c) and (d).

(5) The information on waste shipments received as required in Sec. 61.154(e).

(6) For output materials where no analyses were performed to determine the presence of asbestos, record thename and location of the purchaser or disposal site to which the output materials were sold or deposited, and the date of sale or disposal.

(7) Retain records required by paragraph (f) of this section for at least 2 years.

(g) Submit the following reports to the Administrator:

(1) A report for each analysis of product composite samples performed during the initial 90 days of operation.

(2) A quarterly report, including the following information concerning activities during each consecutive 3-month period:

(i) Results of analyses of monthly product composite samples.

(ii) A description of any deviation from the operating parameters established during performance testing, the duration of the deviation, and steps taken to correct the deviation.

(iii) Disposition of any product produced during a period of deviation, including whether it was recycled, disposed of as asbestos-containing waste material, or stored temporarily on-site until analyzed for asbestos content.

(iv) The information on waste disposal activities as required in Sec. 61.154(f).

(h) Nonasbestos (asbestos-free) output material is not subject to any of the provisions of this subpart. Output materials in which asbestos is detected, or output materials produced when the operating parameters deviated from those established during the start-up performance testing, unless shown by TEM analysis to be asbestos-free, shall be considered to be asbestos-containing waste and shall be handled and disposed of according to Sec. Sec. 61.150 and 61.154 or reprocessed while all of the established operating parameters are being met.

The Milner Butte Landfill does not convert asbestos containing material into non asbestos containing material.

[55 FR 48431, Nov. 20, 1990]

Sec. 61.156 Cross-reference to other asbestos regulations.

In addition to this subpart, the regulations referenced in Table 1 also apply to asbestos and may be applicable to those sources specified in Sec. Sec. 61.142 through 61.151, 61.154, and 61.155 of this subpart. These cross-references are presented for the reader's information and to promote compliance with the cited regulations.

Table 1--Cross-Reference to Other Asbestos Regulations

Agency	CFR citation	Comment
EPA	40 CFR part 763, subpart E.	Requires schools to inspect for asbestos and implement response actions and submit asbestos management plans to States. Specifies use of accredited inspectors, air sampling methods, and waste disposal procedures.
	40 CFR part 427	Effluent standards for asbestos manufacturing source categories.
	40 CFR part 763, subpart G.	Protects public employees performing asbestos abatement work in States not covered by OSHA asbestos standard.
OSHA	29 CFR 1910.1001	Worker protection measures-engineering controls, worker training, labeling, respiratory protection, bagging of waste, permissible exposure level.
	29 CFR 1926.1101	Worker protection measures for all construction work involving asbestos, including demolition and renovation-work practices, worker training, bagging of waste, permissible exposure level.
MSHA	30 CFR part 56, subpart	Specifies exposure limits,

	D.	engineering controls, and respiratory protection measures for workers in surface mines.
	30 CFR part 57, subpart D.	Specifies exposure limits, engineering controls, and respiratory protection measures for workers in underground mines.
DOT	49 CFR parts 171 and 172.	Regulates the transportation of asbestos-containing waste material. Requires waste containment and shipping papers.

The Milner Butte Landfill acknowledges the cross reference to other asbestos regulations.

[55 FR 48432, Nov. 20, 1990, as amended at 60 FR 31920, June 19, 1995; 68 FR 54793, Sept. 18, 2003; 69 FR 43324, July 20, 2004]

Sec. 61.157 Delegation of authority.

(a) In delegating implementation and enforcement authority to a State under section 112(d) of the Act, the authorities contained in paragraph (b) of this section shall be retained by the Administrator and not transferred to a State.

(b) Authorities that will not be delegated to States:

(1) Section 61.149(c)(2)
(2) Section 61.150(a)(4)
(3) Section 61.151(c)
(4) Section 61.152(b)(3)
(5) Section 61.154(d)
(6) Section 61.155(a).

The Milner Butte Landfill acknowledges the delegation of authority.

[55 FR 48433, Nov. 20, 1990]

Appendix A to Subpart M of Part 61--Interpretive Rule Governing Roof Removal Operations

I. Applicability of the Asbestos NESHAP

1.1. Asbestos-containing material (ACM) is material containing more than one percent asbestos as determined using the methods specified in appendix E, subpart E, 40 CFR part 763, section 1, Polarized Light Microscopy. The NESHAP classifies ACM as either ``friable'' or ``nonfriable''. Friable ACM is ACM that, when dry, can be crumbled, pulverized or reduced to powder by hand pressure. Nonfriable ACM is ACM that, when dry, cannot be crumbled, pulverized or reduced to powder by hand pressure.

1.2. Nonfriable ACM is further classified as either Category I ACM or Category II ACM. Category I ACM and Category II ACM are distinguished from each other by their potential to release fibers when damaged. Category I ACM includes asbestos-containing gaskets, packings, resilient floor coverings, resilient floor covering mastic, and asphalt roofing products containing more

than one percent asbestos. Asphalt roofing products which may contain asbestos include built-up roofing; asphalt-containing single ply membrane systems; asphalt shingles; asphalt-containing underlayment felts; asphalt-containing roof coatings and mastics; and asphalt-containing base flashings. ACM roofing products that use other bituminous or resinous binders (such as coal tars or pitches) are also considered to be Category I ACM. Category II ACM includes all other nonfriable ACM, for example, asbestos-cement (A/C) shingles, A/C tiles, and transite boards or panels containing more than one percent asbestos. Generally speaking, Category II ACM is more likely to become friable when damaged than is Category I ACM. The applicability of the NESHAP to Category I and II ACM depends on: (1) the condition of the material at the time of demolition or renovation, (2) the nature of the operation to which the material will be subjected, (3) the amount of ACM involved.

1.3. Asbestos-containing material regulated under the NESHAP is referred to as ``regulated asbestos-containing material'' (RACM). RACM is defined in Sec. 61.141 of the NESHAP and includes: (1) friable asbestos-containing material; (2) Category I nonfriable ACM that has become friable; (3) Category I nonfriable ACM that has been or will be sanded, ground, cut, or abraded; or (4) Category II nonfriable ACM that has already been or is likely to become crumbled, pulverized, or reduced to powder. If the coverage threshold for RACM is met or exceeded in a renovation or demolition operation, then all friable ACM in the operation, and in certain situations, nonfriable ACM in the operation, are subject to the NESHAP.

A. Threshold Amounts of Asbestos-Containing Roofing Material

1.A.1. The NESHAP does not cover roofing projects on single family homes or on residential buildings containing four or fewer dwelling units. 40 CFR 61.141. For other roofing renovation projects, if the total asbestos-containing roof area undergoing renovation is less than 160 ft\2\, the NESHAP does not apply, regardless of the removal method to be used, the type of material (Category I or II), or its condition (friable versus nonfriable). 40 CFR 61.145(a)(4). However, EPA would recommend the use of methods that damage asbestos-containing roofing material as little as possible. EPA has determined that where a rotating blade (RB) roof cutter or equipment that similarly damages the roofing material is used to remove Category I nonfriable asbestos-containing roofing material, the removal of 5580 ft\2\ of that material will create 160 ft\2\ of RACM. For the purposes of this interpretive rule, ``RB roof cutter'' means an engine-powered roof cutting machine with one or more rotating cutting blades the edges of which are blunt. (Equipment with blades having sharp or tapered edges, and/or which does not use a rotating blade, is used for ``slicing'' rather than ``cutting'' the roofing material; such equipment is not included in the term ``RB roof cutter''.) Therefore, it is EPA's interpretation that when an RB roof cutter or equipment that similarly damages the roofing material is used to remove Category I nonfriable asbestos-containing roofing material, any project that is 5580 ft\2\ or greater is subject to the NESHAP; conversely, it is EPA's interpretation that when an RB roof cutter or equipment that similarly damages the roofing material is used to remove Category I nonfriable asbestos-containing roofing material in a roof removal project that is less than 5580 ft\2\, the project is not subject to the NESHAP, except that notification is always required for demolitions. EPA further construes the NESHAP to mean that if slicing or other methods that do not sand, grind, cut or abrade will be used on Category I nonfriable ACM, the NESHAP does not apply, regardless of the area of roof to be removed.

1.A.2. For asbestos cement (A/C) shingles (or other Category II roofing material), if the area of the roofing material to be removed is at least 160

ft\2\ and the removal methods will crumble, pulverize, reduce to powder, or contaminate with RACM (from other ACM that has been crumbled, pulverized or reduced to powder) 160 ft\2\ or more of such roofing material, the removal is subject to the NESHAP. Conversely, if the area of the A/C shingles (or other Category II roofing materials) to be removed is less than 160 ft\2\, the removal is not subject to the NESHAP regardless of the removal method used, except that notification is always required for demolitions. 40 CFR 61.145(a). However, EPA would recommend the use of methods that damage asbestos-containing roofing material as little as possible. If A/C shingles (or other Category II roofing materials) are removed without 160 ft\2\ or more of such roofing material being crumbled, pulverized, reduced to powder, or contaminated with RACM (from other ACM that has been crumbled, pulverized or reduced to powder), the operation is not subject to the NESHAP, even where the total area of the roofing material to be removed exceeds 160 ft\2\; provided, however, that if the renovation includes other operations involving RACM, the roof removal operation is covered if the total area of RACM from all renovation activities exceeds 160 ft\2\. See the definition of regulated asbestos-containing material (RACM), 40 CFR 61.141.

1.A.3. Only roofing material that meets the definition of ACM can qualify as RACM subject to the NESHAP. Therefore, to determine if a removal operation that meets or exceeds the coverage threshold is subject to the NESHAP, any suspect roofing material (i.e. roofing material that may be ACM) should be tested for asbestos. If any such roofing material contains more than one percent asbestos and if the removal operation is covered by the NESHAP, then EPA must be notified and the work practices in Sec. 61.145(c) must be followed. In EPA's view, if a removal operation involves at least the threshold level of suspect material, a roofing contractor may choose not to test for asbestos if the contractor follows the notification and work practice requirements of the NESHAP.

B. A/C Shingle Removal (Category II ACM Removal)

1.B.1. A/C shingles, which are Category II nonfriable ACM, become regulated ACM if the material has a high probability of becoming or has become crumbled, pulverized or reduced to powder by the forces expected to act on the material in the course of demolition or renovation operations. 40 CFR 61.141. However, merely breaking an A/C shingle (or any other category II ACM) that is not friable may not necessarily cause the material to become RACM. A/C shingles are typically nailed to buildings on which they are attached. EPA believes that the extent of breakage that will normally result from carefully removing A/C shingles and lowering the shingles to the ground will not result in crumbling, pulverizing or reducing the shingles to powder. Conversely, the extent of breakage that will normally occur if the A/C shingles are dropped from a building or scraped off of a building with heavy machinery would cause the shingles to become RACM. EPA therefore construes the NESHAP to mean that the removal of A/C shingles that are not friable, using methods that do not crumble, pulverize, or reduce the A/C shingles to powder (such as pry bars, spud bars and shovels to carefully pry the material), is not subject to the NESHAP provided that the A/C shingles are properly handled during and after removal, as discussed in this paragraph and the asbestos NESHAP. This interpretation also applies to other Category II nonfriable asbestos-containing roofing materials.

C. Cutting vs. Slicing and Manual Methods for Removal of Category I ACM

1.C.1. Because of damage to the roofing material, and the potential for fiber release, roof removal operations using rotating blade (RB) roof cutters

or other equipment that sand, grind, cut or abrade the roof material are subject to the NESHAP. As EPA interprets the NESHAP, the use of certain manual methods (using equipment such as axes, hatchets, or knives, spud bars, pry bars, and shovels, but not saws) or methods that slice, shear, or punch (using equipment such as a power slicer or power plow) does not constitute ``cutting, sanding, grinding or abrading.'' This is because these methods do not destroy the structural matrix or integrity of the material such that the material is crumbled, pulverized or reduced to powder. Hence, it is EPA's interpretation that when such methods are used, assuming the roof material is not friable, the removal operation is not subject to the regulation.

1.C.2. Power removers or power tear-off machines are typically used to pry the roofing material up from the deck after the roof membrane has been cut. It is EPA's interpretation that when these machines are used to pry roofing material up, their use is not regulated by the NESHAP.

1.C.3. As noted previously, the NESHAP only applies to the removal of asbestos-containing roofing materials. Thus, the NESHAP does not apply to the use of RB cutters to remove non-asbestos built up roofing (BUR). On roofs containing some asbestos-containing and some non-asbestos-containing materials, coverage under the NESHAP depends on the methods used to remove each type of material in addition to other coverage thresholds specified above. For example, it is not uncommon for existing roofs to be made of non-asbestos BUR and base flashings that do contain asbestos. In that situation, EPA construes the NESHAP to be inapplicable to the removal of the non-asbestos BUR using an RB cutter so long as the RB cutter is not used to cut 5580 ft\2\ or more of the asbestos-containing base flashing or other asbestos-containing material into sections. In addition, the use of methods that slice, shear, punch or pry could then be used to remove the asbestos flashings and not trigger coverage under the NESHAP.

II. Notification

2.1. Notification for a demolition is always required under the NESHAP. However, EPA believes that few roof removal jobs constitute ``demolitions'' as defined in the NESHAP (Sec. 61.141). In particular, it is EPA's view that the removal of roofing systems (i.e., the roof membrane, insulation, surfacing, coatings, flashings, mastic, shingles, and felt underlayment), when such removal is not a part of a demolition project, constitutes a ``renovation'' under the NESHAP. If the operation is a renovation, and Category I roofing material is being removed using either manual methods or slicing, notification is not required by the NESHAP. If Category II material is not friable and will be removed without crumbling, pulverizing, or reducing it to powder, no notification is required. Also, if the renovation involves less than the threshold area for applicability as discussed above, then no notification is required. However, if a roof removal meets the applicability and threshold requirements under the NESHAP, then EPA (or the delegated agency) must be notified in advance of the removal in accordance with the requirements of Sec. 61.145(b), as follows:

<bullet<ls-thn-eq> Notification must be given in writing at least 10 working days in advance and must include the information in Sec. 61.145(b)(4), except for emergency renovations as discussed below.

<bullet<ls-thn-eq> The notice must be updated as necessary, including, for example, when the amount of asbestos-containing roofing material reported changes by 20 percent or more.

<bullet<ls-thn-eq> EPA must be notified if the start date of the roof removal changes. If the start date of a roof removal project is changed to an earlier date, EPA must be provided with a written notice of the new start date at least 10 working days in advance. If the start date changes to a

later date, EPA must be notified by telephone as soon as possible before the original start date and a written notice must be sent as soon as possible.
<bullet<ls-thn-eq> For emergency renovations (as defined in Sec. 61.141), where work must begin immediately to avoid safety or public health hazards, equipment damage, or unreasonable financial burden, the notification must be postmarked or delivered to EPA as soon as possible, but no later than the following work day.

III. Emission Control Practices

A. Requirements To Adequately Wet and Discharge No Visible Emission

3.A.1. The principal controls contained in the NESHAP for removal operations include requirements that the affected material be adequately wetted, and that asbestos waste be handled, collected, and disposed of properly. The requirements for disposal of waste materials are discussed separately in section IV below. The emission control requirements discussed in this section III apply only to roof removal operations that are covered by the NESHAP as set forth in Section I above.
3.A.2. For any operation subject to the NESHAP, the regulation (Sec. Sec. 61.145(c)(2)(i), (3), (6)(i)) requires that RACM be adequately wet (as defined in Sec. 61.141) during the operation that damages or disturbs the asbestos material until collected for disposal.
3.A.3. When using an RB roof cutter (or any other method that sands, grinds, cuts or abrades the roofing material) to remove Category I asbestos-containing roofing material, the emission control requirements of Sec. 61.145(c) apply as discussed in Section I above. EPA will consider a roof removal project to be in compliance with the ``adequately wet'' and ``discharge no visible emission'' requirements of the NESHAP if the RB roof cutter is equipped and operated with the following: (1) a blade guard that completely encloses the blade and extends down close to the roof surface; and (2) a device for spraying a fine mist of water inside the blade guard, and which device is in operation during the cutting of the roof.

B. Exemptions From Wetting Requirements

3.B.1. The NESHAP provides that, in certain instances, wetting may not be required during the cutting of Category I asbestos roofing material with an RB roof cutter. If EPA determines in accordance with Sec. 61.145(c)(3)(i), that wetting will unavoidably damage the building, equipment inside the building, or will present a safety hazard while stripping the ACM from a facility component that remains in place, the roof removal operation will be exempted from the requirement to wet during cutting. EPA must have sufficient written information on which to base such a decision. Before proceeding with a dry removal, the contractor must have received EPA's written approval. Such exemptions will be made on a case-by-case basis.
3.B.2. It is EPA's view that, in most instances, exemptions from the wetting requirements are not necessary. Where EPA grants an exemption from wetting because of the potential for damage to the building, damage to equipment within the building or a safety hazard, the NESHAP specifies alternative control methods (Sec. 61.145(c)(3)(i)(B)). Alternative control methods include (a) the use of local exhaust ventilation systems that capture the dust, and do not produce visible emissions, or (b) methods that are designed and operated in accordance with the requirements of Sec. 61.152, or (c) other methods that have received the written approval of EPA. EPA will consider an alternative emission control method in compliance with the NESHAP if the method has received written approval from EPA and the method is being

implemented consistent with the approved procedures (Sec. 61.145(c)(3)(ii) or Sec. 61.152(b)(3)).

3.B.3. An exemption from wetting is also allowed when the air or roof surface temperature at the point of wetting is below freezing, as specified in Sec. 61.145(c)(7). If freezing temperatures are indicated as the reason for not wetting, records must be kept of the temperature at the beginning, middle and end of the day on which wetting is not performed and the records of temperature must be retained for at least 2 years. 42 CFR Sec. 61.145(c)(7)(iii). It is EPA's interpretation that in such cases, no written application to, or written approval by the Administrator is needed for using emission control methods listed in Sec. 61.145(c)(3)(i)(B), or alternative emission control methods that have been previously approved by the Administrator. However, such written application or approval is required for alternative emission control methods that have not been previously approved. Any dust and debris collected from cutting must still be kept wet and placed in containers. All of the other requirements for notification and waste disposal would continue to apply as described elsewhere in this notice and the Asbestos NESHAP.

C. Waste Collection and Handling

3.C.1. It is EPA's interpretation that waste resulting from slicing and other methods that do not cut, grind, sand or abrade Category I nonfriable asbestos-containing roofing material is not subject to the NESHAP and can be disposed of as nonasbestos waste. EPA further construes the NESHAP to provide that if Category II roofing material (such as A/C shingles) is removed and disposed of without crumbling, pulverizing, or reducing it to powder, the waste from the removal is not subject to the NESHAP waste disposal requirements. EPA also interprets the NESHAP to be inapplicable to waste resulting from roof removal operations that do not meet or exceed the coverage thresholds described in section I above. Of course, other State, local, or Federal regulations may apply.

3.C.2. It is EPA's interpretation that when an RB roof cutter, or other method that similarly damages the roofing material, is used to cut Category I asbestos containing roofing material, the damaged material from the cut (the sawdust or debris) is considered asbestos containing waste subject to Sec. 61.150 of the NESHAP, provided the coverage thresholds discussed above in section 1 are met or exceeded. This sawdust or debris must be disposed of at a disposal site operated in accordance with the NESHAP. It is also EPA's interpretation of the NESHAP that if the remainder of the roof is free of the sawdust and debris generated by the cutting, or if such sawdust or debris is collected as discussed below in paragraphs 3.C.3, 3.C.4, 3.C.5 and 3.C.6, the remainder of the roof can be disposed of as nonasbestos waste because it is considered to be Category I nonfriable material (as long as the remainder of the roof is in fact nonasbestos material or if it is Category I asbestos material and the removal methods do not further sand, grind, cut or abrade the roof material). EPA further believes that if the roof is not cleaned of such sawdust or debris, i.e., it is contaminated, then it must be treated as asbestos-containing waste material and be handled in accordance with Sec. 61.150.

3.C.3. In order to be in compliance with the NESHAP while using an RB roof cutter (or device that similarly damages the roofing material) to cut Category I asbestos containing roofing material, the dust and debris resulting from the cutting of the roof should be collected as soon as possible after the cutting operation, and kept wet until collected and placed in leak-tight containers. EPA believes that where the blade guard completely encloses the blade and extends down close to the roof surface and is equipped

with a device for spraying a fine mist of water inside the blade guard, and the spraying device is in operation during the cutting, most of the dust and debris from cutting will be confined along the cut. The most efficient methods to collect the dust and debris from cutting are to immediately collect or vacuum up the damaged material where it lies along the cut using a filtered vacuum cleaner or debris collector that meets the requirements of 40 CFR 61.152 to clean up as much of the debris as possible, or to gently sweep up the bulk of the debris, and then use a filtered vacuum cleaner that meets the requirements of 40 CFR 61.152 to clean up as much of the remainder of the debris as possible. On smooth surfaced roofs (nonaggregate roofs), sweeping up the debris and then wet wiping the surface may be done in place of using a filtered vacuum cleaner. It is EPA's view that if these decontamination procedures are followed, the remaining roofing material does not have to be collected and disposed of as asbestos waste. Additionally, it is EPA's view that where such decontamination procedures are followed, if the remaining portions of the roof are non-asbestos or Category I nonfriable asbestos material, and if the remaining portions are removed using removal methods that slice, shear, punch or pry, as discussed in section 1.C above, then the remaining portions do not have to be collected and disposed of as asbestos waste and the NESHAP's no visible emissions and adequately wet requirements are not applicable to the removal of the remaining portions. In EPA's interpretation, the failure of a filtered vacuum cleaner or debris collector to collect larger chunks or pieces of damaged roofing material created by the RB roof cutter does not require the remaining roofing material to be handled and disposed of as asbestos waste, provided that such visible chunks or pieces of roofing material are collected (e.g. by gentle sweeping) and disposed of as asbestos waste. Other methods of decontamination may not be adequate, and should be approved by the local delegated agency.

3.C.4. In EPA's interpretation, if the debris from the cutting is not collected immediately, it will be necessary to lightly mist the dust or debris, until it is collected, as discussed above, and placed in containers. The dust or debris should be lightly misted frequently enough to prevent the material from drying, and to prevent airborne emissions, prior to collection as described above. It is EPA's interpretation of the NESHAP that if these procedures are followed, the remaining roofing material does not have to be collected and disposed of as asbestos waste, as long as the remaining roof material is in fact nonasbestos material or if it is Category I asbestos material and the removal methods do not further sand, grind, cut or abrade the roof material.

3.C.5. It is EPA's interpretation that, provided the roofing material is not friable prior to the cutting operation, and provided the roofing material has not been made friable by the cutting operation, the appearance of rough, jagged or damaged edges on the remaining roofing material, due to the use of an RB roof cutter, does not require that such remaining roofing material be handled and disposed of as asbestos waste. In addition, it is also EPA's interpretation that if the sawdust or debris generated by the use of an RB roof cutter has been collected as discussed in paragraphs 3.C.3, 3.C.4 and 3.C.6, the presence of dust along the edge of the remaining roof material does not render such material ``friable'' for purposes of this interpretive rule or the NESHAP, provided the roofing material is not friable prior to the cutting operation, and provided that the remaining roofing material near the cutline has not been made friable by the cutting operation. Where roofing material near the cutline has been made friable by the use of the RB cutter (i.e. where such remaining roofing material near the cutline can be crumbled, pulverized or reduced to powder using hand pressure), it is EPA's interpretation that the use of an encapsulant will ensure that such friable material need not be treated or disposed of as asbestos containing waste

material. The encapsulant may be applied to the friable material after the roofing material has been collected into stacks for subsequent disposal as nonasbestos waste. It is EPA's view that if the encapsulation procedure set forth in this paragraph is followed in operations where roofing material near the cutline has been rendered friable by the use of an RB roof cutter, and if the decontamination procedures set forth in paragraph 3.C.3 have been followed, the NESHAP's no visible emissions and adequately wet requirements would be met for the removal, handling and disposal of the remaining roofing material.

3.C.6. As one way to comply with the NESHAP, the dust and debris from cutting can be placed in leak-tight containers, such as plastic bags, and the containers labeled using warning labels required by OSHA (29 CFR 1926.58). In addition, the containers must have labels that identify the waste generator (such as the name of the roofing contractor, abatement contractor, and/or building owner or operator) and the location of the site at which the waste was generated.

IV. Waste Disposal

A. Disposal Requirements

4.A.1. Section 61.150(b) requires that, as soon as is practical, all collected dust and debris from cutting as well as any contaminated roofing squares, must be taken to a landfill that is operated in accordance with Sec. 61.154 or to an EPA-approved site that converts asbestos waste to nonasbestos material in accordance with Sec. 61.155. During the loading and unloading of affected waste, asbestos warning signs must be affixed to the vehicles.

B. Waste Shipment Record

4.B.1. For each load of asbestos waste that is regulated under the NESHAP, a waste shipment record (WSR) must be maintained in accordance with Sec. 61.150(d). Information that must be maintained for each waste load includes the following:

<bullet<ls-thn-eq> Name, address, and telephone number of the waste generator
<bullet<ls-thn-eq> Name and address of the local, State, or EPA regional office responsible for administering the asbestos NESHAP program
<bullet<ls-thn-eq> Quantity of waste in cubic meters (or cubic yards)
<bullet<ls-thn-eq> Name and telephone number of the disposal site operator
<bullet<ls-thn-eq> Name and physical site location of the disposal site
<bullet<ls-thn-eq> Date transported
<bullet<ls-thn-eq> Name, address, and telephone number of the transporter(s)
<bullet<ls-thn-eq> Certification that the contents meet all government regulations for transport by highways.

4.B.2. The waste generator is responsible for ensuring that a copy of the WSR is delivered to the disposal site along with the waste shipment. If a copy of the WSR signed by the disposal site operator is not returned to the waste generator within 35 days, the waste generator must contact the transporter and/or the disposal site to determine the status of the waste shipment. 40 CFR 61.150(d)(3). If the signed WSR is not received within 45 days, the waste generator must report, in writing, to the responsible NESHAP program agency and send along a copy of the WSR. 40 CFR 61.150(d)(4). Copies

of WSRs, including those signed by the disposal site operator, must be retained for at least 2 years. 40 CFR 61.150(d)(5).

V. Training

5.1. For those roof removals that are subject to the NESHAP, at least one on-site supervisor trained in the provisions of the NESHAP must be present during the removal of the asbestos roofing material. 40 CFR 61.145(c)(8). In EPA's view, this person can be a job foreman, a hired consultant, or someone who can represent the building owner or contractor responsible for the removal. In addition to the initial training requirement, a refresher training course is required every 2 years. The NESHAP training requirements became effective on November 20, 1991.

5.2. Asbestos training courses developed specifically to address compliance with the NESHAP in roofing work, as well as courses developed for other purposes can satisfy this requirement of the NESHAP, as long as the course covers the areas specified in the regulation. EPA believes that Asbestos Hazard Emergency Response Act (AHERA) training courses will, for example, satisfy the NESHAP training requirements. However, nothing in this interpretive rule or in the NESHAP shall be deemed to require that roofing contractors or roofing workers performing operations covered by the NESHAP must be trained or accredited under AHERA, as amended by the Asbestos School Hazard Abatement Reauthorization Act (ASHARA). Likewise, state or local authorities may independently impose additional training, licensing, or accreditation requirements on roofing contractors performing operations covered by the NESHAP, but such additional training, licensing or accreditation is not called for by this interpretive rule or the federal NESHAP.

5.3. For removal of Category I asbestos containing roofing material where RB roof cutters or equipment that similarly damages the asbestos-containing roofing material are used, the NESHAP training requirements (Sec. 61.145(c)(8)) apply as discussed in Section I above. It is EPA's intention that removal of Category I asbestos-containing roofing material using hatchets, axes, knives, and/or the use of spud bars, pry bars and shovels to lift the roofing material, or similar removal methods that slice, punch, or shear the roof membrane are not subject to the training requirements, since these methods do not cause the roof removal to be subject to the NESHAP. Likewise, it is EPA's intention that roof removal operations involving Category II nonfriable ACM are not subject to the training requirements where such operations are not subject to the NESHAP as discussed in section I above.

The Milner Butte Landfill acknowledges the information provided in appendix A.

[59 FR 31158, June 17, 1994, as amended at 60 FR 31920, June 19, 1995]

[Code of Federal Regulations]
[Title 40, Volume 12]
[Revised as of July 1, 2009]
From the U.S. Government Printing Office via GPO Access
[CITE: 40CFR63]

TITLE 40--PROTECTION OF ENVIRONMENT

CHAPTER I--ENVIRONMENTAL PROTECTION AGENCY (CONTINUED)

PART 63_NATIONAL EMISSION STANDARDS FOR HAZARDOUS AIR POLLUTANTS FOR SOURCE CATEGORIES--Table of Contents

Subpart AAAA_National Emission Standards for Hazardous Air Pollutants: Municipal Solid Waste Landfills

Source: 68 FR 2238, Jan. 16, 2003, unless otherwise noted.

What This Subpart Covers

Sec. 63.1930 What is the purpose of this subpart?

This subpart establishes national emission standards for hazardous air pollutants for existing and new municipal solid waste (MSW) landfills. This subpart requires all landfills described in Sec. 63.1935 to meet the requirements of 40 CFR part 60, subpart Cc or WWW and requires timely control of bioreactors. This subpart also requires such landfills to meet the startup, shutdown, and malfunction (SSM) requirements of the general provisions of this part and provides that compliance with the operating conditions shall be demonstrated by parameter monitoring results that are within the specified ranges. It also includes additional reporting requirements.

Sec. 63.1935 Am I subject to this subpart?

You are subject to this subpart if you meet the criteria in paragraph (a) or (b) of this section.

(a) You are subject to this subpart if you own or operate a MSW landfill that has accepted waste since November 8, 1987 or has additional capacity for waste deposition and meets any one of the three criteria in paragraphs (a)(1) through (3) of this section:

(1) Your MSW landfill is a major source as defined in 40 CFR 63.2 of subpart A.

(2) Your MSW landfill is collocated with a major source as defined in 40 CFR 63.2 of subpart A.

(3) Your MSW landfill is an area source landfill that has a design capacity equal to or greater than 2.5 million megagrams (Mg) and 2.5 million cubic meters (m \3\) and has estimated uncontrolled emissions equal to or greater than 50 megagrams per year (Mg/yr) NMOC as calculated according to Sec. 60.754(a) of the MSW landfills new source performance standards in 40 CFR part 60, subpart WWW, the Federal plan, or an EPA approved and effective State or tribal plan that applies to your landfill.

The Milner Butte Landfill has accepted waste since November 8, 1987 and has a design capacity greater than 2.5 million megagrams and 2.5 million cubic meters.

(b) You are subject to this subpart if you own or operate a MSW landfill that has accepted waste since November 8, 1987 or has additional capacity for waste deposition, that includes a bioreactor, as defined in Sec. 63.1990, and that meets any one of the criteria in paragraphs (b)(1) through (3) of this section:

(1) Your MSW landfill is a major source as defined in 40 CFR 63.2 of subpart A.

(2) Your MSW landfill is collocated with a major source as defined in 40 CFR 63.2 of subpart A.

(3) Your MSW landfill is an area source landfill that has a design capacity equal to or greater than 2.5 million Mg and 2.5 million m3 and that is not permanently closed as of January 16, 2003.

The Milner Butte Landfill has accepted waste since November 8, 1987 but is not classified as a bioreactor as defined in Sec. 63.1990.

Sec. 63.1940 What is the affected source of this subpart?

(a) An affected source of this subpart is a MSW landfill, as defined in Sec. 63.1990, that meets the criteria in Sec. 63.1935(a) or (b).
The affected source includes the entire disposal facility in a contiguous geographic space where household waste is placed in or on land, including any portion of the MSW landfill operated as a bioreactor.

(b) A new affected source of this subpart is an affected source that commenced construction or reconstruction after November 7, 2000. An affected source is reconstructed if it meets the definition of reconstruction in 40 CFR 63.2 of subpart A.

(c) An affected source of this subpart is existing if it is not new.

The Milner Butte Landfill has accepted waste since November 8, 1987 but is not classified as a bioreactor as defined in Sec. 63.1990.

Sec. 63.1945 When do I have to comply with this subpart?

(a) If your landfill is a new affected source, you must comply with this subpart by January 16, 2003 or at the time you begin operating, whichever is last.

The Milner Butte Landfill is not a new affected source.

(b) If your landfill is an existing affected source, you must comply with this subpart by January 16, 2004.

The Milner Butte Landfill is an existing affected source.

(c) If your landfill is a new affected source and is a major source or is collocated with a major source, you must comply with the requirements in Sec. Sec. 63.1955(b) and 63.1960 through 63.1980 by the date your landfill is required to install a collection and control system by 40 CFR 60.752(b)(2) of subpart WWW.

(d) If your landfill is an existing affected source and is a major source or is collocated with a major source, you must comply with the requirements in Sec. Sec. 63.1955(b) and 63.1960 through 63.1980 by the date your landfill is required to install a collection and control system by 40 CFR 60.752(b)(2) of subpart WWW, the Federal plan, or EPA approved and effective State or tribal plan that applies to your landfill or by January 13, 2004, whichever occurs later.

The Milner Butte Landfill is not a major source source.

(e) If your landfill is a new affected source and is an area source meeting the criteria in Sec. 63.1935(a)(3), you must comply with the requirements of Sec. Sec. 63.1955(b) and 63.1960 through 63.1980 by the date your landfill is required to install a collection and control system by 40 CFR 60.752(b)(2) of subpart WWW.

The Milner Butte Landfill is not a new affected source.

(f) If your landfill is an existing affected source and is an area source meeting the criteria in Sec. 63.1935(a)(3), you must comply with the requirements in Sec. Sec. 63.1955(b) and 63.1960 through 63.1980 by the date your landfill is required to install a collection and control system by 40 CFR 60.752(b)(2) of subpart WWW, the Federal plan, or EPA approved and effective State or tribal plan that applies to your landfill or by January 16, 2004, whichever occurs later.

The Milner Butte Landfill is an existing affected source in an area meeting the criteria in Sec. 63.1935(a)(3).

Sec. 63.1947 When do I have to comply with this subpart if I own or operate a bioreactor?

You must comply with this subpart by the dates specified in Sec. 63.1945(a) or (b) of this subpart. If you own or operate a bioreactor located at a landfill that is not permanently closed as of January 16, 2003 and has a design capacity equal to or greater than 2.5 million Mg and 2.5 million m\3\, then you must install and operate a collection and control system that meets the criteria in 40 CFR 60.752(b)(2)(v) of part 60, subpart WWW, the Federal plan, or EPA approved and effective State plan according to the schedule specified in paragraph (a), (b), or (c) of this section.

(a) If your bioreactor is at a new affected source, then you must meet the requirements in paragraphs (a)(1) and (2) of this section:

(1) Install the gas collection and control system for the bioreactor before initiating liquids addition.

(2) Begin operating the gas collection and control system within 180 days after initiating liquids addition or within 180 days after achieving a moisture content of 40 percent by weight, whichever is later. If you choose to begin gas collection and control system operation 180 days after achieving a 40 percent moisture content instead of 180 days after liquids addition, use the procedures in Sec. 63.1980(g) and (h) to determine when the bioreactor moisture content reaches 40 percent.

(b) If your bioreactor is at an existing affected source, then you must install and begin operating the gas collection and control system for the bioreactor by January 17, 2006 or by the date your bioreactor is required to install a gas collection and control system under 40 CFR part 60, subpart WWW, the Federal plan, or EPA approved and effective State plan or tribal plan that applies to your landfill, whichever is earlier.

(c) If your bioreactor is at an existing affected source and you do not initiate liquids addition to your bioreactor until later than January 17, 2006, then you must meet the requirements in paragraphs (c)(1) and (2) of this section:

(1) Install the gas collection and control system for the bioreactor before initiating liquids addition.

(2) Begin operating the gas collection and control system within 180 days after initiating liquids addition or within 180 days after achieving a moisture content of 40 percent by weight, whichever is later. If you choose to begin gas collection and control system operation 180 days after achieving a 40 percent moisture content instead of 180 days after liquids addition, use the procedures in Sec. 63.1980(g) and (h) to determine when the bioreactor moisture content reaches 40 percent.

The Milner Butte Landfill is not classified as a bioreactor as defined in Sec. 63.1990.

Sec. 63.1950 When am I no longer required to comply with this subpart?

You are no longer required to comply with the requirements of this subpart when you are no longer required to apply controls as specified in 40 CFR 60.752(b)(2)(v) of subpart WWW, or the Federal plan or EPA approved and effective State plan or tribal plan that implements 40 CFR part 60, subpart Cc, whichever applies to your landfill.

The Milner Butte Landfill acknowledges the criteria required to no longer comply with this subpart.

Sec. 63.1952 When am I no longer required to comply with the requirements of this subpart if I own or operate a bioreactor?

If you own or operate a landfill that includes a bioreactor, you are no longer required to comply with the requirements of this subpart for the bioreactor provided you meet the conditions of either paragraphs (a) or (b).
(a) Your affected source meets the control system removal criteria in 40 CFR 60.752(b)(2)(v) of part 60, subpart WWW or the bioreactor meets the criteria for a nonproductive area of the landfill in 40 CFR 60.759(a)(3)(ii) of part 60, subpart WWW.
(b) The bioreactor portion of the landfill is a closed landfill as defined in 40 CFR 60.751, subpart WWW, you have permanently ceased adding liquids to the bioreactor, and you have not added liquids to the bioreactor for at least 1 year. A closure report for the bioreactor must be submitted to the Administrator as provided in 40 CFR 60.757(d) of subpart WWW.
(c) Compliance with the bioreactor control removal provisions in this section constitutes compliance with 40 CFR part 60, subpart WWW or the Federal plan, whichever applies to your bioreactor.

The Milner Butte Landfill is not classified as a bioreactor as defined in Sec. 63.1990.

Standards

Sec. 63.1955 What requirements must I meet?

(a) You must fulfill one of the requirements in paragraph (a)(1) or (2) of this section, whichever is applicable:
(1) Comply with the requirements of 40 CFR part 60, subpart WWW.
(2) Comply with the requirements of the Federal plan or EPA approved and effective State plan or tribal plan that implements 40 CFR part 60, subpart Cc.

The Milner Butte Landfill will comply with the requirements of 40 CFR Part 60, Subpart WWW.

(b) If you are required by 40 CFR 60.752(b)(2) of subpart WWW, the Federal plan, or an EPA approved and effective State or tribal plan to install a collection and control system, you must comply with the requirements in Sec. 63.1960 through 63.1985 and with the general provisions of this part specified in table 1 of this subpart.

The Milner Butte Landfill is required by 40 CFR 60.752(b)(2) of Subpart WWW to install a collection and control system and will comply with the requirements in Sec. 63.1960 through 63.1985 and the general provisions of this part.

(c) For approval of collection and control systems that include any alternatives to the operational standards, test methods, procedures, compliance measures, monitoring, recordkeeping or reporting provisions, you must follow the procedures in 40 CFR 60.752(b)(2). If alternatives have already been approved under 40 CFR part 60 subpart WWW or the Federal plan, or EPA approved and effective State or tribal plan, these alternatives can be used to comply with this subpart, except that all affected sources must comply with the SSM requirements in Subpart A of this part as specified in Table 1 of this subpart and all affected sources must submit compliance reports every 6 months as specified in Sec. 63.1980(a) and (b), including information on all deviations that occurred during the 6-month reporting period. Deviations for continuous emission monitors or numerical continuous parameter monitors must be determined using a 3 hour monitoring block average.

The Milner Butte Landfill will follow the procedures in CFR 60.752(b)(2) of Subpart WWW and/or approved alternatives. The Milner Butte Landfill will comply with the SSM requirements in Subpart A of this part and will submit compliance reports every 6 months as specified in Sec. 63.1980(a) and (b).

(d) If you own or operate a bioreactor that is located at a MSW landfill that is not permanently closed and has a design capacity equal to or greater than 2.5 million Mg and 2.5 million m\3\, then you must meet the requirements of paragraph (a) and the additional requirements in paragraphs (d)(1) and (2) of this section.

(1) You must comply with the general provisions specified in Table 1 of this subpart and Sec. Sec. 63.1960 through 63.1985 starting on the date you are required to install the gas collection and control system.

(2) You must extend the collection and control system into each new cell or area of the bioreactor prior to initiating liquids addition in that area, instead of the schedule in 40 CFR 60.752(b)(2)(ii)(A)(2).

The Milner Butte Landfill is not classified as a bioreactor as defined in Sec. 63.1990.

General and Continuing Compliance Requirements

Sec. 63.1960 How is compliance determined?

Compliance is determined in the same way it is determined for 40 CFR part 60, subpart WWW, including performance testing, monitoring of the collection system, continuous parameter monitoring, and other credible evidence. In addition, continuous parameter monitoring data, collected under 40 CFR 60.756(b)(1), (c)(1), and (d) of subpart WWW, are used to demonstrate compliance with the operating conditions for control systems. If a deviation

occurs, you have failed to meet the control device operating conditions described in this subpart and have deviated from the requirements of this subpart. Finally, you must develop a written SSM plan according to the provisions in 40 CFR 63.6(e)(3). A copy of the SSM plan must be maintained on site. Failure to write or maintain a copy of the SSM plan is a deviation from the requirements of this subpart.

[68 FR 2238, Jan. 16, 2003, as amended at 71 FR 20462, Apr. 20, 2006]

The Milner Butte Landfill acknowledges how compliance is determined and will maintain records of monitoring data collected under 40 CFR 60.756(b)(1), (c)(1), and (d) of Subpart WWW. The Milner Butte Landfill will develop a written SSM Plan according to 40 CFR 63.6(e)(3) and maintain a copy on site.

Sec. 63.1965 What is a deviation?

A deviation is defined in Sec. 63.1990. For the purposes of the landfill monitoring and SSM plan requirements, deviations include the items in paragraphs (a) through (c) of this section.

(a) A deviation occurs when the control device operating parameter boundaries described in 40 CFR 60.758(c)(1) of subpart WWW are exceeded.

(b) A deviation occurs when 1 hour or more of the hours during the 3-hour block averaging period does not constitute a valid hour of data. A valid hour of data must have measured values for at least three 15-minute monitoring periods within the hour.

(c) A deviation occurs when a SSM plan is not developed or maintained on site.

[68 FR 2238, Jan. 16, 2003, as amended at 71 FR 20462, Apr. 20, 2006]

The Milner Butte Landfill understands the definition of a deviation.

Sec. 63.1975 How do I calculate the 3-hour block average used to demonstrate compliance?

Averages are calculated in the same way as they are calculated in 40 CFR part 60, subpart WWW, except that the data collected during the events listed in paragraphs (a), (b), (c), and (d) of this section are not to be included in any average computed under this subpart:

(a) Monitoring system breakdowns, repairs, calibration checks, and zero (low-level) and high-level adjustments.

(b) Startups.

(c) Shutdowns.

(d) Malfunctions.

The Milner Butte Landfill will calculate the 3-hour block average according to 40 CFR Part 60, Subpart WWW and will exclude the periods described above.

Notifications, Records, and Reports

Sec. 63.1980 What records and reports must I keep and submit?

(a) Keep records and reports as specified in 40 CFR part 60, subpart WWW, or in the Federal plan, EPA approved State plan or tribal plan that implements 40 CFR part 60, subpart Cc, whichever applies to your landfill, with one exception: You must submit the annual report described in 40 CFR 60.757(f) every 6 months.

The Milner Butte Landfill will keep records as specified in 40 CFR 60 Part 60, Subpart WWW and will submit the annual report described in 40 CFR 60 Part 60.757 (f) every 6 months.

(b) You must also keep records and reports as specified in the general provisions of 40 CFR part 60 and this part as shown in Table 1 of this subpart. Applicable records in the general provisions include items such as SSM plans and the SSM plan reports.

The Milner Butte Landfill will keep records as specified in the general provisions of 40 CFR Part 60 and this part as shown in Table 1 of this subpart including SSM Plans and SSM Plan reports.

(c) For bioreactors at new affected sources you must submit the initial semiannual compliance report and performance test results described in 40 CFR 60.757(f) within 180 days after the date you are required to begin operating the gas collection and control system by Sec. 63.1947(a)(2) of this subpart.

(d) For bioreactors at existing affected sources, you must submit the initial semiannual compliance report and performance test results described in 40 CFR 60.757(f) within 180 days after the compliance date specified in Sec. 63.1947(b) of this subpart, unless you have previously submitted a compliance report for the bioreactor required by 40 CFR part 60, subpart WWW, the Federal plan, or an EPA approved and effective State plan or tribal plan.

(e) For bioreactors that are located at existing affected sources, but do not initiate liquids addition until later than the compliance date in Sec. 63.1947(b) of this subpart, you must submit the initial semiannual compliance report and performance tests results described in 40 CFR 60.757(f) within 180 days after the date you are required to begin operating the gas collection and control system by Sec. 63.1947(c) of this subpart.

(f) If you must submit a semiannual compliance report for a bioreactor as well as a semiannual compliance report for a conventional portion of the same landfill, you may delay submittal of a subsequent semiannual compliance report for the bioreactor according to paragraphs (f)(1) through (3) of this section so that the reports may be submitted on the same schedule.

(1) After submittal of your initial semiannual compliance report and performance test results for the bioreactor, you may delay submittal of the subsequent semiannual compliance report for the bioreactor until the date the initial or subsequent semiannual compliance report is due for the conventional portion of your landfill.

(2) You may delay submittal of your subsequent semiannual compliance report by no more than 12 months after the due date for submitting the initial semiannual compliance report and performance test results described in 40 CFR 60.757(f) for the bioreactor. The report shall cover the time period since the previous semiannual report for the bioreactor, which would be a period of at least 6 months and no more than 12 months.

(3) After the delayed semiannual report, all subsequent semiannual reports for the bioreactor must be submitted every 6 months on the same date the semiannual report for the conventional portion of the landfill is due.

(g) If you add any liquids other than leachate in a controlled fashion to the waste mass and do not comply with the bioreactor requirements in Sec. Sec. 63.1947, 63.1955(c) and 63.1980(c) through (f) of this subpart, you must keep a record of calculations showing that the percent moisture by weight expected in the waste mass to which liquid is added is less than 40 percent. The calculation must consider the waste mass, moisture content of the incoming waste, mass of water added to the waste including leachate

recirculation and other liquids addition and precipitation, and the mass of water removed through leachate or other water losses. Moisture level sampling or mass balances calculations can be used. You must document the calculations and the basis of any assumptions. Keep the record of the calculations until you cease liquids addition.

(h) If you calculate moisture content to establish the date your bioreactor is required to begin operating the collection and control system under Sec. 63.1947(a)(2) or (c)(2), keep a record of the calculations including the information specified in paragraph (g) of this section for 5 years. Within 90 days after the bioreactor achieves 40 percent moisture content, report the results of the calculation, the date the bioreactor achieved 40 percent moisture content by weight, and the date you plan to begin collection and control system operation.

The Milner Butte Landfill is not classified as a bioreactor as defined in Sec. 63.1990.

Other Requirements and Information

Sec. 63.1985 Who enforces this subpart?

(a) This subpart can be implemented and enforced by the U.S. EPA, or a delegated authority such as the applicable State, local, or tribal agency. If the EPA Administrator has delegated authority to a State, local, or tribal agency, then that agency as well as the U.S. EPA has the authority to implement and enforce this subpart. Contact the applicable EPA Regional Office to find out if this subpart is delegated to a State, local, or tribal agency.

(b) In delegating implementation and enforcement authority of this subpart to a State, local, or tribal agency under subpart E of this part, the authorities contained in paragraph (c) of this section are retained by the EPA Administrator and are not transferred to the State, local, or tribal agency.

(c) The authorities that will not be delegated to State, local, or tribal agencies are as follows. Approval of alternatives to the standards in Sec. 63.1955. Where these standards reference another subpart, the cited provisions will be delegated according to the delegation provisions of the referenced subpart.

The Milner Butte Landfill is subject to enforcement by the U.S. EPA or the Idaho Department of Environmental Quality as delegation of 40 CFR Part 63, Subpart AAAA was granted by the U.S. EPA on June 23, 2010.

Sec. 63.1990 What definitions apply to this subpart?

Terms used in this subpart are defined in the Clean Air Act, 40 CFR part 60, subparts A, Cc, and WWW; 40 CFR part 62, subpart GGG, and subpart A of this part, and this section that follows:

Bioreactor means a MSW landfill or portion of a MSW landfill where any liquid other than leachate (leachate includes landfill gas condensate) is added in a controlled fashion into the waste mass (often in combination with recirculating leachate) to reach a minimum average moisture content of at least 40 percent by weight to accelerate or enhance the anaerobic (without oxygen) biodegradation of the waste.

Deviation means any instance in which an affected source subject to this subpart, or an owner or operator of such a source:

(1) Fails to meet any requirement or obligation established by this subpart, including, but not limited to, any emissions limitation (including any operating limit) or work practice standard;

(2) Fails to meet any term or condition that is adopted to implement an applicable requirement in this subpart and that is included in the operating permit for any affected source required to obtain such a permit; or

(3) Fails to meet any emission limitation, (including any operating limit), or work practice standard in this subpart during SSM, regardless of whether or not such failure is permitted by this subpart.

Emissions limitation means any emission limit, opacity limit, operating limit, or visible emissions limit.

EPA approved State plan means a State plan that EPA has approved based on the requirements in 40 CFR part 60, subpart B to implement and enforce 40 CFR part 60, subpart Cc. An approved State plan becomes effective on the date specified in the notice published in the Federal Register announcing EPA's approval.

Federal plan means the EPA plan to implement 40 CFR part 60, subpart Cc for existing MSW landfills located in States and Indian country where State plans or tribal plans are not currently in effect. On the effective date of an EPA approved State or tribal plan, the Federal plan no longer applies. The Federal plan is found at 40 CFR part 62, subpart GGG.

Municipal solid waste landfill or MSW landfill means an entire disposal facility in a contiguous geographical space where household waste is placed in or on land. A municipal solid waste landfill may also receive other types of RCRA Subtitle D wastes (see Sec. 257.2 of this chapter) such as commercial solid waste, nonhazardous sludge, conditionally exempt small quantity generator waste, and industrial solid waste. Portions of a municipal solid waste landfill may be separated by access roads. A municipal solid waste landfill may be publicly or privately owned. A municipal solid waste landfill may be a new municipal solid waste landfill, an existing municipal solid waste landfill, or a lateral expansion.

Tribal plan means a plan submitted by a tribal authority pursuant to 40 CFR parts 9, 35, 49, 50, and 81 to implement and enforce 40 CFR part 60, subpart Cc.

Work practice standard means any design, equipment, work practice, or operational standard, or combination thereof, that is promulgated pursuant to section 112(h) of the Clean Air Act.

As stated in Sec. Sec. 63.1955 and 63.1980, you must meet each requirement in the following table that applies to you.

The Milner Butte acknowledges the definitions.

Table 1 to Subpart AAAA of Part 63--Applicability of NESHAP General Provisions to Subpart AAAA

Part 63 Citation	Description	Explanation
63.1(a)	Applicability: general applicability of NESHAP in this part.	Affected sources are already subject to the provisions of paragraphs (a)(10)-(12) through the same provisions under 40 CFR, part 60 subpart A.

63.1(b)	Applicability determination for stationary sources.	
63.1(e)	Title V permitting.	
63.2	Definitions.	
63.4	Prohibited activities and circumvention.	Affected sources are already subject to the provisions of paragraph (b) through the same provisions under 40 CFR, part 60 subpart A.
63.5(b)	Requirements for existing, newly constructed, and reconstructed sources.	
63.6(e)	Operation and maintenance requirements, startup, shutdown and malfunction plan provisions.	
63.6(f)	Compliance with nonopacity emission standards.	Affected sources are already subject to the provisions of paragraphs (f)(1) and (2)(i) through the same provisions under 40 CFR, part 60 subpart A.
63.10(b)(2)(i)-(b)(2)(v)	General recordkeeping requirements.	
63.10(d)(5)	If actions taken during a startup, shutdown and malfunction plan are consistent with the procedures in the startup, shutdown and malfunction plan, this information shall be included in a semi-annual startup, shutdown and malfunction plan report. Any time an action taken during a startup, shutdown and malfunction	

	plan is not consistent with the startup, shutdown and malfunction plan, the source shall report actions taken within 2 working days after commencing such actions, followed by a letter 7 days after the event.
63.12(a)	These provisions do not preclude the State from adopting and enforcing any standard, limitation, etc., requiring permits, or requiring emissions reductions in excess of those specified.
63.15	Availability of information and confidentiality.

The Milner Butte acknowledges the above Table 1 requirements and will comply with the SSM provisions by February 21, 2012 for full NSPS compliance.

123. CERTIFICATION OF DOCUMENTS.
All documents, including but not limited to, application forms for permits to construct, application forms for operating permits, progress reports, records, monitoring data, supporting information, requests for confidential treatment, testing reports or compliance certifications submitted to the Department shall contain a certification by a responsible official. The certification shall state that, based on information and belief formed after reasonable inquiry, the statements and information in the document are true, accurate, and complete. (5-1-94)

The Milner Butte Landfill acknowledges the certification of document requirements.

124. TRUTH, ACCURACY AND COMPLETENESS OF DOCUMENTS.
All documents submitted to the Department shall be truthful, accurate and complete. (5-1-94)

The Milner Butte Landfill acknowledges the truth, accuracy and completeness of documents requirements.

125. FALSE STATEMENTS.
No person shall knowingly make any false statement, representation, or certification in any form, notice, or report required under any permit, or any applicable rule or order in force pursuant thereto. (3-23-98)

The Milner Butte Landfill acknowledges the false statements requirements.

126. TAMPERING.
No person shall knowingly render inaccurate any monitoring device or method required under any permit, or any applicable rule or order in force pursuant thereto. (3-23-98)

The Milner Butte Landfill acknowledges the tampering requirements.

130. STARTUP, SHUTDOWN, SCHEDULED MAINTENANCE, SAFETY MEASURES, UPSET AND BREAKDOWN.
The purpose of Sections 130 through 136 is to establish procedures and requirements to be implemented in all excess emissions events and to establish criteria to be applied by the Department in determining whether to take enforcement action to impose penalties for an excess emissions event where the excess emissions are caused by startup, shutdown, scheduled maintenance, upset, or breakdown of any emissions unit or which occur as a direct result of the implementation of any safety measure. (4-5-00)

The Milner Butte Landfill acknowledges the purpose of Section 130 through 136.

131. EXCESS EMISSIONS.
01. Applicability. The owner or operator of a facility or emissions unit generating excess emissions shall comply with Sections 131, 132, 133.01, 134.01, 134.02, 134.03, 135, and 136, as applicable. If the owner or operator anticipates requesting consideration under Subsection 131.02, then the owner or operator shall also comply with the applicable provisions of Subsections 133.02, 133.03, 134.04, and 134.05. (4-5-00)

The Milner Butte Landfill acknowledges the applicability of excess emissions.

02. Enforcement Action Criteria. Where an excess emissions event occurs as a direct result of startup, shutdown, or scheduled maintenance, or an unavoidable upset or unavoidable breakdown, or the implementation of a safety measure, the Department shall consider the sufficiency of the information submitted and the following criteria to determine if an enforcement action to impose penalties is warranted: (4-5-00)

a. Whether prior to the excess emissions event, the owner or operator submitted and implemented procedures pursuant to Subsections 133.02 and 133.03 or Subsections 134.04 and 134.05, as applicable; (4-5-00)

b. Whether the owner or operator complied with all relevant portions of Subsections 131, 132, 133.01, 134.01, 134.02, 134.03, 135, and 136; (4-5-00)

c. Whether the excess emissions event was part of a recurring pattern of excess emissions events indicative of inadequate design, operation or maintenance of the facility or emissions unit; and (4-5-00)

d. Where appropriate, whether the excess emissions event was caused by an activity necessary to prevent loss of life, personal injury or severe property damage. (4-5-00)

The Milner Butte Landfill acknowledges the enforcement action criteria above.

03. Effect of Determination. Any decision by the Department under Subsection 131.02 shall not excuse the owner or operator from compliance with the relevant emission standard and shall not preclude the Department from taking an enforcement action to enjoin the activity causing the excess emissions. Any decision made by the Department under Subsection 131.02 shall not preclude the Department from taking an enforcement action for future or other excess emission events. The affirmative defense for emergencies under Section 332 of these Rules may be applied in addition to the provisions of Sections 130 through 136. (4-5-00)

The Milner Butte Landfill acknowledges the effect of determination.

132. CORRECTION OF CONDITION.

The person responsible for, or in charge of a facility during, an excess emissions event shall, with all practicable speed, initiate and complete appropriate and reasonable action to correct the conditions causing such excess emissions event; to reduce the frequency of occurrence of such events; to minimize the amount by which the emission standard is exceeded; and shall, as provided below or upon request of the Department, submit a full report of such occurrence, including a statement of all known causes, and of the scheduling and nature of the actions to be taken. (4-5-00)

The Milner Butte Landfill acknowledges the correction of condition actions listed above.

133. STARTUP, SHUTDOWN AND SCHEDULED MAINTENANCE REQUIREMENTS.

The requirements in Subsection 133.01 shall apply in all cases where startup, shutdown, or scheduled maintenance of any equipment or emissions unit is expected to result or results in an excess emissions event. The owner or operator of the facility or emissions unit generating the excess emissions shall demonstrate compliance with all of the requirements of Subsection 133.01, as well as the development and implementation of procedures pursuant to Subsections 133.02 and 133.03 as a prerequisite to any consideration under Subsection 131.02. (4-5-00)

01. General Provisions. The following shall pertain to all startup, shutdown, and scheduled maintenance activities expected to result or resulting in excess emissions: (4-5-00)

a. No scheduled startup, shutdown, or maintenance resulting in excess emissions shall occur during any period in which an Atmospheric Stagnation Advisory and/or a Wood Stove Curtailment Advisory has declared by the Department within an area designated by the Department as a PM-10 nonattainment area, unless the permittee demonstrates that such is reasonably necessary to facility operations and cannot be reasonably avoided and the Department approves such activity in advance, to the extent advance approval by the Department is feasible. This prohibition on scheduled startup, shutdown or maintenance activities during Advisories does not apply to situations where shutdown is necessitated by urgent situations, such as imminent equipment failure, power curtailment, worker safety concerns or similar situations. (3-20-97)

b. The owner or operator of a source of excess emissions shall notify the Department of any startup, shutdown, or scheduled maintenance event that is expected to cause an excess emissions event. Such notification shall identify the time of the excess emissions, specific location, equipment involved, and type of excess emissions event (i.e. startup, shutdown, or scheduled maintenance). The notification shall be given as soon as reasonably possible, but no later than two (2) hours prior to the start of the excess emissions event unless the owner or operator demonstrates to the Department's satisfaction that a shorter advanced notice was necessary. The Department may prohibit or postpone any scheduled startup, shutdown, or maintenance activity upon consideration of the factors listed in Subsection 134.03. (4-5-00)

c. The owner or operator of a source of excess emissions shall report and record the information required pursuant to Sections 135 and 136 for each excess emissions event due to startup, shutdown, or scheduled maintenance. (3-20-97)

d. The owner or operator of a source of excess emissions must make the maximum reasonable effort, including off-shift labor where practicable to accomplish maintenance during periods of nonoperation of any related source operations or equipment. (4-5-00)

The Milner Butte Landfill acknowledges the general provision of the Startup, Shutdown and Scheduled Maintenance Requirements.

02. Excess Emissions Procedures. For all equipment or emissions unit from which excess emissions may occur during startup, shutdown, or scheduled maintenance, the facility owner or operator shall prepare, implement and file with the Department specific procedures which will be used to minimize excess emissions during such events. Specific information for each of the types of excess emissions events (i.e. startup, shutdown and scheduled maintenance) shall be established or documented for each piece of equipment or emissions unit and shall include all of the following (which may be based upon the facility owner or operator's knowledge of the process or emissions where measured data is unavailable): (4-5-00)

a. Identification of the specific equipment or emissions unit and the type of event anticipated.(4-5-00)

b. Identification of the specific emissions in excess of applicable emission standards during the startup, shutdown, or scheduled maintenance period. (4-11-06)

c. The estimated amount of excess emissions expected to be released during each event. (3-20-97)

d. The expected duration of each excess emissions event. (3-20-97)

e. An explanation of why the excess emissions are reasonably unavoidable for each of the types of excess emissions events (i.e. startup, shutdown, and scheduled maintenance). (3-20-97)

f. Specification of the frequency at which each of the types of excess emissions events (i.e. startup, shutdown, and scheduled maintenance) are expected to occur. (3-20-97)

g. For scheduled maintenance, the owner or operator shall also document detailed explanations of: (4-5-00)

i. Why the maintenance is needed. (3-20-97)

ii. Why it is impractical to reduce or cease operation of the equipment or emissions unit during the scheduled maintenance period. (4-5-00)

iii. Why the excess emissions are not reasonably avoidable through better scheduling of the maintenance or through better operation and maintenance practices. (3-20-97)

iv. Why, where applicable, it is necessary to by-pass, take off line, or operate equipment or emissions unit at reduced efficiency while the maintenance is being performed. (4-5-00)

h. Justification to explain why the piece of equipment or emissions unit cannot be modified or redesigned to eliminate or reduce the excess emissions which occur during startup, shutdown, and scheduled maintenance. (4-5-00)

i. Detailed specification of the procedures to be followed by the owner or operator which will minimize excess emissions at all times during startup, shutdown, and scheduled maintenance. These procedures may include such measures as preheating or otherwise conditioning the emissions unit prior to its use or the application of auxiliary equipment or emissions unit to reduce the excess emissions. (4-5-00)

The Milner Butte Landfill should not release excess emissions during startup, shutdown or periods of scheduled maintenance.

03. Amendments to Procedures. The owner or operator shall amend, and the Department may require amendments to, the procedures established pursuant to Section 133 from time to time and as deemed reasonably necessary to ensure that the procedures are and remain consistent with good pollution control practices. (4-5-00)

The Milner Butte Landfill acknowledges the amendments to procedures listed above.

04. Filing of Excess Emissions Procedures. (4-5-00)

a. Unless otherwise required by the Department, the failure to prepare or file procedures pursuant to Subsection 133.02 shall not be a violation of these Rules in and of itself. (4-5-00)

b. To the extent procedures or plans for excess emissions resulting from startup, shutdown, or scheduled maintenance are required to be or are otherwise submitted to the Department with any permit application, such submission, if deemed adequate by the Department, shall fulfill the requirement under this Section to file plans and procedures with the Department. (4-5-00)

The Milner Butte Landfill acknowledges the procedures for filing of excess emissions.

134. UPSET, BREAKDOWN AND SAFETY REQUIREMENTS.

The requirements in Subsections 134.01, 134.02, and 134.03 shall apply in all cases where upset or breakdown of equipment or an emissions unit, or the initiation of safety measures, result or may result in an excess emissions event. The owner or operator of the facility or emissions unit generating the excess emissions shall demonstrate compliance with all of the requirements of Subsections 134.01, 134.02 and 134.03 as well as the development and implementation of procedures pursuant to Subsections 134.04 and 134.05 as a prerequisite to any consideration under Subsection 131.02. Where the owner or operator demonstrates that because of the unforeseeable nature of the excess emissions event it is impractical to develop procedures pursuant to Subsection 134.04, the Department shall exercise its enforcement discretion on a case by case basis. (4-5-00)

01. Routine Maintenance and Repairs. For all equipment or emissions units from which excess emissions may occur during upset conditions or breakdowns or implementation of safety measures, the facility owner or operator shall: (4-5-00)

a. Implement routine preventative maintenance and operating procedures consistent with good pollution control practices for minimizing upsets and breakdowns or events requiring implementation of safety measures, and (3-20-97)

b. Make routine repairs in an expeditious fashion when the owner or operator knew or should have known that an excess emissions event was likely to occur. Off-shift labor and overtime shall be utilized, to the extent practicable, to ensure that such repairs are made expeditiously. (3-20-97)

The Milner Butte Landfill acknowledges the routine maintenance and repairs requirements above.

02. Excess Emissions Minimization and Notification. For all equipment or emissions units from which excess emissions result during upset or breakdown conditions, or for other situations that may necessitate the implementation of safety measures which cause excess emissions, the facility owner or operator shall comply with the following: (4-5-00)

a. The owner or operator shall immediately undertake all appropriate measures to reduce and, to the extent possible, eliminate excess emissions resulting from the event and to minimize the impact of such excess emissions on the ambient air quality and public health. (4-5-00)

b. The owner or operator shall notify the Department of any upset/breakdown/safety event that results in excess emissions. Such notification shall identify the time, specific location, equipment or emissions unit involved, and (to the extent known) the cause(s) of the occurrence. The notification shall be given as soon as reasonably possible, but no later than twenty-four (24) hours after the event, unless the owner or operator demonstrates to the Department’s satisfaction that the longer reporting period was necessary. (4-5-00)

c. The owner or operator shall report and record the information required pursuant to Sections 135 and 136 for each excess emissions event caused by an upset, breakdown, or safety measure. (3-20-97)

The Milner Butte Landfill acknowledges the excess emissions minimization and notification requirements above.

03. Discretionary Reduction or Cessation Provisions. During any period of excess emissions caused by upset, breakdown, or operation under facility safety measures, the Department may require the owner or operator to immediately reduce or cease operation of the equipment or emissions unit causing the excess emissions until such

time as the condition causing the excess emissions has been corrected or brought under control. Such action by the Department shall be taken upon consideration of the following factors and after consultation with the facility owner or operator: (4-5-00)

a. Potential risk to the public or the environment. (3-20-97)

b. Whether ceasing operations could result in physical damage to the equipment, emissions unit or facility, or cause injury to employees. (4-5-00)

c. Whether continued excess emissions were reasonably unavoidable as determined by the Department. (4-5-00)

d. The effect of the increase in pollution resulting from the shutdown and subsequent restart of the equipment or emissions unit or facility. (4-5-00)

e. The owner or operator shall not be required to reduce or cease operations at the entire facility if reducing or ceasing operations at a portion of the facility eliminates or adequately reduces the excess emissions. (4-5-00)

The Milner Butte Landfill acknowledges the discretionary reduction or cessation provisions listed above.

04. Excess Emissions Procedures. For equipment or emissions units and process upsets and breakdowns and situations that require implementation of safety measures, which events can reasonably be anticipated to occur periodically but which cannot be reasonably avoided or predicted with certainty, the owner or operator shall prepare, implement, and file with the Department specific procedures which will be used to minimize such events and excess emissions during such events. To the extent possible and reasonably practicable (and based upon knowledge of the process or emissions where measured data is not available), specify the following information for each type of anticipated upset/ breakdown/safety event: (4-5-00)

a. The specific air pollution control equipment or emissions unit and the type of event anticipated. (3-20-97)

b. The specific emissions in excess of applicable emission standards during the event. (4-11-06)

c. The estimated amount of excess emissions expected to be released during each event. (3-20-97)

d. The expected duration of each excess emissions event. (3-20-97)

e. An explanation of why the excess emissions are reasonably unavoidable. (3-20-97)

f. The frequency of the type of event, based on historic occurrences. (3-20-97)

g. Justification to explain why the piece of control equipment or emissions unit cannot be modified or redesigned to eliminate or reduce the particular type of event. (3-20-97)

h. Detailed specification of the procedures to be followed by the owner or operator which will minimize excess emissions at all times during such events, including without limitation those procedures listed under Subsection 134.05. (3-20-97)

The Milner Butte Landfill acknowledges the excess emissions procedures listed above.

05. Amendments to Procedures. The owner or operator shall amend, and the Department may require amendments to, the procedures established pursuant to Section 134 from time to time and as deemed reasonably necessary to ensure that the procedures are and remain consistent with good pollution control practices. (4-5-00)

The Milner Butte Landfill acknowledges the amendments to procedures.

06. Filing of Excess Emissions Procedures. (4-5-00)

a. Failure to follow procedures filed with the Department shall not preclude the Department from making a determination under Subsection 131.02 if the owner or operator demonstrates to the Department's satisfaction that alternate and equivalent procedures were used and were necessitated by the exigency of the circumstances. (4-5-00)

b. Unless otherwise required by the Department, the failure to prepare or file procedures pursuant to Subsection 134.04 shall not be a violation of these Rules in and of itself. (4-5-00)

c. To the extent procedures or plans for excess emissions resulting from upsets, breakdowns or safety measures are required to be or are otherwise submitted to the Department with any permit application, such

submission, if deemed adequate by the Department, shall fulfill the requirement under this Section to file plans and procedures with the Department. (4-5-00)

The Milner Butte Landfill acknowledges the filing of excess emissions procedures listed above.

135. EXCESS EMISSIONS REPORTS.

01. Deadline for Excess Emissions Reports. A written report for each excess emissions event shall be submitted to the Department by the owner or operator no later than fifteen (15) days after the beginning of each such event. (3-20-97)

The Milner Butte Landfill acknowledges the deadline for excess emissions reports.

02. Contents of Excess Emissions Reports. Each report shall contain the following information: (3-20-97)

a. The time period during which the excess emissions occurred; (3-20-97)

b. Identification of the specific equipment or emissions unit which caused the excess emissions; (3-20-97)

c. An explanation of the cause, or causes, of the excess emissions and whether the excess emissions occurred as a result of startup, shutdown, scheduled maintenance, upset, breakdown or a safety measure; (3-20-97)

d. An estimate of the emissions in excess of any applicable emission standard (based on knowledge of the process and facility where emissions data is unavailable); (4-11-06)

e. A description of the activities carried out to eliminate the excess emissions; and (3-20-97)

f. Certify compliance status with the requirements of Sections 131, 132, 133.01, 134.01 through 134.03, 135, and 136. (4-5-00)

g. If requesting consideration under Subsection 131.02, certify compliance status with Sections 131, 132, 133.01 through 133.03, 134.01 through 134.05, 135, and 136. (4-5-00)

The Milner Butte Landfill acknowledges the contents of excess emissions reports.

136. EXCESS EMISSIONS RECORDS.

01. Maintenance of Excess Emissions Records. The owner or operator shall maintain excess emissions records at the facility for the most recent five (5) calendar year period. (3-20-97)

The Milner Butte Landfill will maintain excess emissions records at the facility for 5 years.

02. Availability of Excess Emissions Records. The excess emissions records shall be made available to the Department upon request. (3-20-97)

The Milner Butte Landfill will make available the excess emissions records to The Department upon request.

03. Contents of Excess Emissions Records. The excess emissions records shall include the following: (3-20-97)

a. An excess emissions log book for each emissions unit or piece of equipment containing copies of all reports that have been submitted to the Department pursuant to Section 135 for the particular emissions unit or equipment; and (4-5-00)

b. Copies of all startup, shutdown, and scheduled maintenance procedures and upset/breakdown/ safety preventative maintenance plans which have been developed by the owner or operator in accordance with Sections 133 and 134, and facility records as necessary to demonstrate compliance with such procedures and plans. (3-20-97)

The Milner Butte Landfill acknowledges the contents of excess emissions records.

04. Protections Under Section 128. The protections under Section 128 for confidential information shall be available for excess emissions reports and records upon proper request of the owner or operator in accordance with Section 128. (3-23-98)

The Milner Butte Landfill acknowledges the protections for excess emissions reports and records.

157. TEST METHODS AND PROCEDURES.

The purpose of this Section is to establish procedures and requirements for test methods and results. Unless otherwise specified in these rules, permit, order, consent decree, or prior written approval by the Department: (4-5-00)

01. General Requirements. If a source test is performed to satisfy a performance test requirement or a compliance test requirement imposed by state or federal regulation, rule, permit, order or consent decree, then the test methods and procedures shall be conducted in accordance with the requirements of Section 157. (4-5-00)

The Milner Butte Landfill is required to conduct performance testing imposed by federal regulation.

a. Prior to conducting any emission test, owners or operators are strongly encouraged to submit to the Department in writing, at least thirty (30) days in advance, the following for approval: (4-5-00)

i. The type of method to be used; (4-5-00)

ii. Any extenuating or unusual circumstances regarding the proposed test; and (4-5-00)

iii. The proposed schedule for conducting and reporting the test. (4-5-00)

The Milner Butte Landfill will submit the above information to The Department at least 30 days prior to conducting a performance test.

b. Without prior Department approval, any alternative testing is conducted solely at the owner's or operator's risk. If the owner or operator fails to obtain prior written approval by the Department for any testing deviations, the Department may determine the test does not satisfy the testing requirements. (4-5-00)

The Milner Butte Landfill acknowledges the above risk to conduct alternative testing without prior approval from The Department.

02. Test Requirements. Tests shall be conducted in accordance with the following requirements. (4-5-00)

a. The test must be conducted under operational conditions specified in the applicable state or federal regulation, rule, permit, order, consent decree or by Department approval. If the operational requirements are not specified, the source should test at worst-case normal operating conditions. Worst-case normal conditions are those conditions of fuel type, and moisture, process material makeup and moisture and process procedures which are changeable or which could reasonably be expected to be encountered during the operation of the facility and which would result in the highest pollutant emissions from the facility. (4-5-00)

b. The Department may impose operational limitations or require additional testing in a permit, order or consent decree if the test is conducted under conditions other than worst-case normal. (4-5-00)

c. The Department will accept the methods approved for the applicable pollutants, source type and operating conditions found in 40 CFR Parts 51, 60, 61, and 63 in determining the appropriate test method for an emission limit where one is not otherwise specified. (4-5-00)

The Milner Butte Landfill will conduct performance tests in accordance with the above test requirements.

d. The following requirements apply to owners or operators requesting minor changes in the test method. As stated in Subsection 157.01 above, without prior Department approval, other changes may result in rejection of the test results by the Department. (4-5-00)

i. For federal emission standards codified at 40 CFR Parts 60, 61, and 63, the Department will accept those minor changes which have received written approval of the U.S. EPA Administrator so long as the Department determines they are appropriate for the specific application. (4-5-00)

ii. For all other emission standards in these rules or for permit requirements, the Department will accept those minor changes that the Department determines are appropriate for the specific application. (4-5-00)

The Milner Butte Landfill acknowledges the requirements for requesting minor changes to test methods.

e. An owner or operator proposing to use an alternative test method not considered a minor change in Subsection 157.02.d. above, must: (4-5-00)

i. Demonstrate to the Department by comparative testing or sufficient analysis, that the alternative method is comparable and equivalent to the designated test method. (4-5-00)

ii. Submit the request for approval to use an alternative test method to the Department at least thirty (30) days in advance of a scheduled test. (4-5-00)

iii. Obtain, and submit to the Department, EPA approval for use of the alternative test method for emission standards in these rules (except for state only toxic air pollutant standards) or for federal emission standards codified at 40 CFR Parts 60, 61, and 63. (4-5-00)

iv. Obtain verification that any prior approval of an alternative test method by the Department continues to be acceptable. Alternative methods may cease to be acceptable if new or different information indicates that the alternative test method is less accurate, less reliable, or not comparable with any current state or federal regulation, rule order, permit, or consent decree. (4-5-00)

The Milner Butte Landfill acknowledges the requirements for proposing to use an alternative test method that is not considered a minor change.

f. Prior approval by the Department may not constitute Department approval for subsequent tests if new or different information indicates that a previously Department approved test method is less accurate, less reliable or not comparable with any current state or federal regulation, rule, order, permit or consent decree. (4-5-00)

The Milner Butte Landfill acknowledges the above condition.

03. Observation of Tests by Department Staff. The owner or operator shall provide notice of intent to test to the Department at least fifteen (15) days prior to the scheduled test, or shorter time period as provided in a permit, order, consent decree or by Department approval. The Department may, at its option, have an observer present at any emissions tests conducted on a source. (4-5-00)

The Milner Butte Landfill will provide notice of intent to test to The Department at least 15 days prior to the scheduled test.

04. Reporting Requirements. If the source test is performed to satisfy a performance test requirement imposed by state or federal regulation, rule, permit, order, or consent decree, a written report shall be submitted to the Department within thirty (30) days of the completion of the test. The written report shall: (4-5-00)

a. Meet the format and content requirements specified by the Department in any applicable rule, regulation, guidance, permit, order, or consent decree. Any deviations from the format and contents specified require prior written approval from the Department. Failure to obtain such approval may result in the rejection of the test results. (4-5-00)

b. Include all data required to be noted or recorded in any referenced test method. (4-5-00)

The Milner Butte Landfill will provide The Department a written report containing the above items within 30 days after completion of the test.

05. Test Results Review Criteria. The Department will make every effort to review test results within a reasonable time. The Department may reject tests as invalid for: (4-5-00)

a. Failure to adhere to the approved/required method; (4-5-00)

b. Using a method inappropriate for the source type or operating conditions; (4-5-00)

c. An incomplete written report; (4-5-00)

d. Computational or data entry errors; (4-5-00)

e. Clearly unreasonable results; (4-5-00)

f. Failure to comply with the certification requirements of Section 123 of these rules; or (4-5-00)

g. Failure of the source to conform to operational requirements in orders, permits, or consent decrees at the time of the test. (4-5-00)

The Milner Butte Landfill acknowledges the test results review criteria.

161. TOXIC SUBSTANCES.

Any contaminant which is by its nature toxic to human or animal life or vegetation shall not be emitted in such quantities or concentrations as to alone, or in combination with other contaminants, injure or unreasonably affect human or animal life or vegetation. (6-30-95)

The Milner Butte Landfill will not emit toxic substances in quantities that will injure or unreasonably affect human or animal life or vegetation.

200. PROCEDURES AND REQUIREMENTS FOR PERMITS TO CONSTRUCT.

The purposes of Sections 200 through 228 is to establish uniform procedures and requirements for the issuance of "Permits to Construct." As used throughout Sections 200 through 228 and 578 through 581, major facility shall be defined as major stationary source in 40 CFR 52.21(b), incorporated by reference into these rules at Section 107, and major modification shall be defined as in 40 CFR 52.21(b), incorporated by reference into these rules at Section 107. These CFR sections have been codified in the electronic CFR which is available at www.gpoaccess.gov/ecfr. (4-2-08)

The Milner Butte Landfill acknowledges the procedures and requirements for permits to construct.

201. PERMIT TO CONSTRUCT REQUIRED.

No owner or operator may commence construction or modification of any stationary source, facility, major facility, or major modification without first obtaining a permit to construct from the Department which satisfies the requirements of Sections 200 through 228 unless the source is exempted in any of Sections 220 through 223, or the owner or operator complies with Section 213 and obtains the required permit to construct, or the owner or operator complies with Sections 175 through 181, or the source operates in accordance with all of the applicable provisions of a permit by rule. (4-11-06)

The Milner Butte Landfill acknowledges that a permit to construct is required.

202. APPLICATION PROCEDURES.

Application for a permit to construct must be made using forms furnished by the Department, or by other means prescribed by the Department. The application shall be certified by the responsible official in accordance with Section 123 and shall be accompanied by all information necessary to perform any analysis or make any determination required under Sections 200 through 228. (7-1-02)

01. Required Information. Depending upon the proposed size and location of the new or modified stationary source or facility, the application for a permit to construct shall include all of the information required by one or more of the following provisions: (5-1-94)

a. For any new or modified stationary source or facility: (5-1-94)

i. Site information, plans, descriptions, specifications, and drawings showing the design of the stationary source, facility, or modification, the nature and amount of emissions (including secondary emissions), and the manner in which it will be operated and controlled. (5-1-94)

ii. A schedule for construction of the stationary source, facility, or modification. (5-1-94)

b. For any new major facility or major modification in a nonattainment area which would be major for the nonattainment regulated air pollutant(s): (4-5-00)

i. A description of the system of continuous emission control proposed for the new major facility or major modification, emission estimates, and other information as necessary to determine that the lowest achievable emission rate would be applied. (5-1-94)

ii. A description of the emission offsets proposed for the new major facility or major modification, including information on the stationary sources, mobile sources, or facilities providing the offsets, emission estimates, and other information necessary to determine that a net air quality benefit would result. (4-5-00)

iii. Certification that all other facilities in Idaho, owned or operated by (or under common ownership of) the proposed new major facility or major modification, are in compliance with all local, state or federal requirements or are on a schedule for compliance with such. (5-1-94)

iv. An analysis of alternative sites, sizes, production processes, and environmental control techniques which demonstrates that the benefits of the proposed major facility or major modification significantly outweigh the environmental and social costs imposed as a result of its location, construction, or modification. (5-1-94)

v. An analysis of the impairment to visibility of any federal Class I area, Class I area designated by the Department, or integral vista of any mandatory federal Class I area that the new major facility or major modification would impact (including the monitoring of visibility in any Class I area near the new major facility or major modification, if requested by the Department). (4-6-05)

c. For any new major facility or major modification in an attainment or unclassifiable area for any regulated air pollutant. (4-6-05)

i. A description of the system of continuous emission control proposed for the new major facility or major modification, emission estimates, and other information as necessary to determine that the best available control technology would be applied. (5-1-94)

ii. An analysis of the effect on air quality by the new major facility or major modification, including meteorological and topographical data necessary to estimate such effects. (5-1-94)

iii. An analysis of the effect on air quality projected for the area as a result of general commercial, residential, industrial, and other growth associated with the new major facility or major modification. (5-1-94)

iv. A description of the nature, extent, and air quality effects of any or all general commercial, residential, industrial, and other growth which has occurred since August 7, 1977, in the area the new major facility or major modification would affect. (5-1-94)

v. An analysis of the impairment to visibility, soils, and vegetation that would occur as a result of the new major facility or major modification and general commercial, residential, industrial, and other growth associated with establishment of the new major facility or major modification. The owner or operator need not provide an analysis of the impact on vegetation or soils having no significant commercial or recreational value. (5-1-94)

vi. An analysis of the impairment to visibility of any federal Class I area, Class I area designated by the Department, or integral vista of any mandatory federal Class I area that the new major facility or major modification would affect. (5-1-94)

vii. An analysis of the existing ambient air quality in the area that the new major facility or major modification would affect for each regulated air pollutant that a new major facility would emit in significant amounts or for which a major modification would result in a significant net emissions increase. (4-5-00)

viii. Ambient analyses as specified in Subsections 202.01c.vii., 202.01c.ix., 202.01c.x., and 202.01c.xii., may not be required if the projected increases in ambient concentrations or existing ambient concentrations of a particular regulated air pollutant in any area that the new major facility or major modification would affect are less than the following amounts, or the regulated air pollutant is not listed herein: carbon monoxide - five hundred and seventy-five (575) micrograms per cubic meter, eight (8) hour average; nitrogen dioxide - fourteen (14) micrograms per cubic meter, annual average; PM-10 - ten (10) micrograms per cubic meter, twenty-four (24) hour average; sulfur dioxide - thirteen (13) micrograms per cubic meter, twenty-four (24) hour average; ozone - any net increase of one hundred (100) tons per year or more of volatile organic compounds, as a measure of ozone; lead - one-tenth

(0.1) of a microgram per cubic meter, calendar quarterly average; mercury - twenty-five hundredths (0.25) of a microgram per cubic meter, twenty-four (24) hour average; beryllium - one-thousandth (0.001) of a microgram per cubic meter, twenty-four (24) hour average; fluorides - twenty-five hundredths (0.25) of a microgram per cubic meter, twenty-four (24) hour average; vinyl chloride - fifteen (15) micrograms per cubic meter, twenty-four (24) hour average; hydrogen sulfide - two-tenths (0.2) of a microgram per cubic meter, one (1) hour average. (4-5-00)

ix. For any regulated air pollutant which has an ambient air quality standard, the analysis shall include continuous air monitoring data, gathered over the year preceding the submittal of the application, unless the Department determines that a complete and adequate analysis can be accomplished with monitoring data gathered over a period shorter than one (1) year, but not less than four (4) months, which is adequate for determining whether the emissions of that regulated air pollutant would cause or contribute to a violation of the ambient air quality standard or any prevention of significant deterioration (PSD) increment. (4-5-00)

x. For any regulated air pollutant which does not have an ambient air quality standard, the analysis shall contain such air quality monitoring data that the Department determines is necessary to assess ambient air quality for that air pollutant in any area that the emissions of that air pollutant would affect. (4-5-00)

xi. If requested by the Department, monitoring of visibility in any Class I area the proposed new major facility or major modification would affect. (5-1-94)

xii. Operation of monitoring stations shall meet the requirements of Appendix B to 40 CFR Part 58 or such other requirements as extensive as those set forth in Appendix B as may be approved by the Department. (5-1-94)

02. Estimates of Ambient Concentrations. All estimates of ambient concentrations shall be based on the applicable air quality models, data bases, and other requirements specified in 40 CFR 51, Appendix W (Guideline on Air Quality Models). (4-5-00)

a. Where an air quality model specified in the “Guideline on Air Quality Models,” is inappropriate, the model may be modified or another model substituted, subject to written approval of the Administrator of the U.S. Environmental Protection Agency and public comment pursuant to Subsection 209.01.c.; provided that modifications and substitutions of models used for toxic air pollutants will be reviewed by the Department. (4-5-00)

b. Methods like those outlined in the U.S. Environmental Protection Agency's “Interim Procedures for Evaluating Air Quality Models (Revised)” (September 1984) should be used to determine the comparability of air quality models. (5-1-94)

03. Additional Information. Any additional information, plans, specifications, evidence or documents that the Department may require to make the determinations required under Sections 200 through 225 shall be furnished upon request. (5-1-94)

The Milner Butte Landfill acknowledges the above application procedures for a Permit to Construct.

203. PERMIT REQUIREMENTS FOR NEW AND MODIFIED STATIONARY SOURCES.

No permit to construct shall be granted for a new or modified stationary source unless the applicant shows to the satisfaction of the Department all of the following: (5-1-94)

01. Emission Standards. The stationary source or modification would comply with all applicable local, state or federal emission standards. (5-1-94)

02. NAAQS. The stationary source or modification would not cause or significantly contribute to a violation of any ambient air quality standard. (5-1-94)

03. Toxic Air Pollutants. Using the methods provided in Section 210, the emissions of toxic air pollutants from the stationary source or modification would not injure or unreasonably affect human or animal life or vegetation as required by Section 161. Compliance with all applicable toxic air pollutant carcinogenic increments and toxic air pollutant non-carcinogenic increments will also demonstrate preconstruction compliance with Section 161 with regards to the pollutants listed in Sections 585 and 586. (6-30-95)

The Milner Butte Landfill acknowledges the permit requirements for new and modified stationary sources.

204. PERMIT REQUIREMENTS FOR NEW MAJOR FACILITIES OR MAJOR MODIFICATIONS IN NONATTAINMENT AREAS.

New major facilities or major modifications proposed for location in a nonattainment area and which would be major for the nonattainment regulated air pollutant are considered nonattainment new source review (NSR) actions and are subject to the requirements in Section 204. Section 202 contains application requirements and Section 209

contains processing requirements for nonattainment NSR permitting actions. The intent of Section 204 is to incorporate the federal nonattainment NSR rule requirements. (4-6-05)

01. Incorporated Federal Program Requirements. Requirements contained in the following subparts of 40 CFR 51.165 are incorporated by reference into these rules at Section 107. Requirements contained in the following subparts of 40 CFR 52.21, are incorporated by reference at Section 107 of these rules. These CFR sections have been codified in the electronic CFR which is available at www.gpoaccess.gov/ecfr

40 CFR Reference	40 CFR Reference Title
40 CFR 51.165(a)(1)	Definitions
40 CFR 51.165(a)(2)(ii) - 51.165(a)(3)	Applicability Provisions
40 CFR 51.165(a)(6)(i) - (v)	Applicability Provisions
40 CFR 52.21(aa)	Actual PALs

(4-2-08)

02. Additional Requirements. The applicant must demonstrate to the satisfaction of the Department the following: (4-6-05)

a. LAER. Except as otherwise provided in Section 204, the new major facility or major modification would be operated at the lowest achievable emission rate (LAER) for the nonattainment regulated air pollutant, specifically: (4-6-05)

i. A new major facility would meet the lowest achievable emission rate at each new emissions unit which emits the nonattainment regulated air pollutant; and (4-5-00)

ii. A major modification would meet the lowest achievable emission rate at each new or modified emissions unit which has a net emissions increase of the nonattainment regulated air pollutant. (4-5-00)

b. Required offsets. Allowable emissions from the new major facility or major modification are offset by reductions in actual emissions from stationary sources, facilities, and/or mobile sources in the nonattainment area so as to represent reasonable further progress. All offsetting emission reductions must satisfy the requirements for emission reduction credits (Section 460) and provide for a net air quality benefit which satisfies the requirements of Section 208. If the offsets are provided by other stationary sources or facilities, a permit to construct shall not be issued for the new major facility or major modification until the offsetting reductions are made enforceable through the issuance of operating permits. The new major facility or major modification may not commence operation, and an operating permit for the new major facility or major modification shall not be effective before the date the offsetting reductions are achieved. (4-5-00)

c. Compliance status. All other sources in the State owned or operated by the applicant, or by any entity controlling, controlled by or under common control with such person, are in compliance with all applicable emission limitations and standards or subject to an enforceable compliance schedule. (5-1-94)

d. Effect on visibility. The effect on visibility of any federal Class I area, Class I area designated by the Department, or integral vista of a mandatory Class I Federal Area, by the new major facility or major modification, is consistent with making reasonable progress toward the national visibility goal referred to in 40 CFR 51.300(a). The Department may take into account the costs of compliance, the time necessary for compliance, the energy and non-air quality environmental impacts of compliance and the useful life of the source. Any integral vista which the Federal Land Manager has not identified at least six (6) months prior to the submittal of a complete application, or which the Department determines was not identified in accordance with the criteria adopted pursuant to 40 CFR 51.304(a), may be exempted from Section 204 by the Department. (3-30-07)

03. Nonmajor Requirements. If the proposed action meets the requirements of an exemption or exclusion under the provisions of 40 CFR 51.165 or 40 CFR 52.21 incorporated in Section 204, the nonmajor facility or stationary source permitting requirements of Sections 200 through 228 apply, including the exemptions in Sections 220 through 223. (4-6-05)

The Milner Butte Landfill is not considered a major facility and is not located in a nonattainment area.

205. PERMIT REQUIREMENTS FOR NEW MAJOR FACILITIES OR MAJOR MODIFICATIONS IN ATTAINMENT OR UNCLASSIFIABLE AREAS.

The prevention of significant deterioration (PSD) program is a construction permitting program for new major facilities and major modifications to existing major facilities located in areas in attainment or in areas that are unclassifiable for any criteria air pollutant. Section 202 contains application requirements and Section 209 contains processing requirements for PSD permit actions. The intent of Section 205 is to incorporate the federal PSD rule requirements. (4-6-05)

01. Incorporated Federal Program Requirements. Requirements contained in the following subparts of 40 CFR 52.21 are incorporated by reference into these rules at Section 107. These CFR sections have been codified in the electronic CFR which is available at www.gpoaccess.gov/ecfr.

40 CFR Reference	40 CFR Reference Title
40 CFR 52.21(a)(2)	Applicability Procedures
40 CFR 52.21(b)	Definitions
40 CFR 52.21(i)	Review of Major Stationary Sources and Major Modifications - Source Applicability and Exempting
40 CFR 52.21(j)	Control Technology Review
40 CFR 52.21(k)	Source Impact Analysis
40 CFR 52.21(r)	Source Obligation
40 CFR 52.21(v)	Innovative Control Technology
40 CFR 52.21(w)	Permit Rescission
40 CFR 52.21(aa)	Actual PALS

(4-2-08)

02. Effect on Visibility. The applicant must demonstrate that the effect on visibility of any federal Class I area, Class I area designated by the Department, or integral vista of a mandatory Class I Federal Area, by the new major facility or major modification, is consistent with making reasonable progress toward the national visibility goal referred to in 40 CFR 51.300(a). The Department may take into account the costs of compliance, the time necessary for compliance, the energy and non-air quality environmental impacts of compliance and the useful life of the source. Any integral vista which the Federal Land Manager has not identified at least six (6) months prior to the submittal of a complete application, or which the Department determines was not identified in accordance with the criteria adopted pursuant to 40 CFR 51.304(a), may be exempted from this requirement by the Department.(3-30-07)

03. Exception to Incorporation by Reference of 40 CFR 52.21. Every use of the word Administrator in 40 CFR 52.21 means the Department except for the following: (4-6-05)

a. In 40 CFR 52.21(b)(17), the definition of federally enforceable, Administrator means the EPA Administrator. (4-6-05)

b. In 40 CFR 52.21(l)(2), air quality models, Administrator means the EPA Administrator. (4-6-05)

c. In 40 CFR 52.21(b)(43), permit program approved by the Administrator, Administrator means the EPA Administrator. (4-6-05)

d. In 40 CFR 52.21(b)(48)(ii)(c), MACT standard that is proposed or promulgated by the Administrator, Administrator means the EPA Administrator. (4-6-05)

e. In 40 CFR 52.21(b)(50)(i), regulated NSR pollutant as defined by Administrator, Administrator means the EPA Administrator. (4-6-05)

04. Nonmajor Requirements. If the proposed action meets the requirements of an exemption or exclusion under the provisions of 40 CFR 52.21 incorporated in Section 205, the nonmajor facility or stationary source permitting requirements of Sections 200 through 228 apply, including the exemptions in Sections 220 through 223. (4-6-05)

The Milner Butte Landfill is not considered a major facility and is not located in a nonattainment area.

206. OPTIONAL OFFSETS FOR PERMITS TO CONSTRUCT.

The owner or operator of any proposed new or modified stationary source, new major facility, or major modification, which cannot meet the requirements of Subsections 202.01.c.vi., 203.02, 203.03, 204.02.d., 205.01 (40 CFR 52.21(k)), and 209.02.b.vi., may propose the use of an emission offset in order to meet those requirements and thereby obtain a permit to construct. Any proposed emission offset must satisfy the requirements for emission reduction credits, Section 460, and demonstrate, through appropriate dispersion modeling, that the offset will reduce ambient concentrations sufficiently to meet the requirements at all modeled receptors which could not otherwise have met the requirements. (4-6-05)

The Milner Butte Landfill is not proposing to use emission offsets to meet any requirements.

207. REQUIREMENTS FOR EMISSION REDUCTION CREDIT.

In order to be credited in a permit to construct, any emission reduction credit must satisfy the requirements of Section 460. (5-1-94)

The Milner Butte Landfill is not proposing to utilize emission reduction credits.

208. DEMONSTRATION OF NET AIR QUALITY BENEFIT.

The demonstration of net air quality benefit shall: (5-1-94)

01. VOCs. For trades involving volatile organic compounds, show that total emissions are reduced for the air basin in which the stationary source or facility is located; (5-1-94)

02. Other Regulated Air Pollutants. For trades involving any other regulated air pollutant, show through appropriate dispersion modeling that the trade will not cause an increase in ambient concentrations at any modeled receptor; (4-5-00)

03. Mobile Sources. For trades involving mobile sources, show a reduction in the ambient impact of emissions upon air quality by obtaining sufficient emission reductions to, at a minimum, compensate for adverse ambient impact where the major facility or major modification would otherwise cause or significantly contribute to a violation of any national ambient air quality standard. (4-5-00)

The Milner Butte Landfill is not proposing to use emission trading.

209. PROCEDURE FOR ISSUING PERMITS.

01. General Procedures. General procedures for permits to construct. (5-1-94)

a. Within thirty (30) days after receipt of the application for a permit to construct, the Department shall determine whether the application is complete or whether more information must be submitted and shall notify the applicant of its findings in writing. (5-1-94)

b. Within sixty (60) days after the application is determined to be complete the Department shall: (5-1-94)

i. Upon written request of the applicant, provide a draft permit for applicant review. Agency action on the permit under this Section may be delayed if deemed necessary to respond to applicant comments. (4-5-00)

ii. Notify the applicant in writing of the approval, conditional approval, or denial of the application if an opportunity for public comment is not required pursuant to Subsection 209.01.c. The Department shall set forth reasons for any denial; or (5-1-94)

iii. Issue a proposed approval, proposed conditional approval, or proposed denial. (5-1-94)

c. An opportunity for public comment will be provided on all applications requiring a permit to construct. Public comment shall be provided on an application for any new major facility or major modification, any new facility or modification which would affect any Class I area, any application which uses fluid modeling or a field study to establish a good engineering practice stack height pursuant to Sections 510 through 516, any application which uses an interpollutant trade pursuant to Subsection 210.17, any application which the Director determines an opportunity for public comment should be provided, and any application upon which the applicant so requests. (5-3-03)

i. The Department's proposed action, together with the information submitted by the applicant and the Department's analysis of the information, shall be made available to the public in at least one (1) location in the region in which the stationary source or facility is to be located. (5-1-94)

ii. The availability of such materials shall be made known by notice published in a newspaper of general circulation in the county(ies) in which the stationary source or facility is to be located. (5-1-94)

iii. A copy of such notice shall be sent to the applicant and to appropriate federal, state and local agencies. (5-1-94)

iv. There shall be a thirty (30) day period after initial publication for comment on the Department's proposed action, such comment to be made in writing to the Department. (5-1-94)

v. After consideration of comments and any additional information submitted during the comment period, and within forty-five (45) days after initial publication of the notice, or notice of public hearing if one is requested under Subsections 209.02.b.iv. or 209.02.a.ii., unless the Director deems that additional time is required to evaluate comments and information received, the Department shall notify the applicant in writing of approval, conditional approval, or denial of the permit. The Department shall set forth the reasons for any denial. (5-1-94)

vi. All comments and additional information received during the comment period, together with the Department's final determination, shall be made available to the public at the same location as the preliminary determination. (5-1-94)

d. A copy of each permit will be sent to the U.S. Environmental Protection Agency. (5-1-94)

02. Additional Procedures for Specified Sources. (5-1-94)

a. For any new major facility or major modification in an attainment or unclassifiable area for any regulated air pollutant. (4-6-05)

i. The public notice issued pursuant to Subsection 209.01.c.ii. shall indicate the degree of increment consumption that is expected from the new major facility or major modification; and (5-1-94)

ii. The public notice issued pursuant to Subsection 209.01.c.ii. shall indicate the opportunity for a public hearing for interested persons to appear and submit written or oral comments on the air quality effects of the new major facility or major modification, alternatives to it, the control technology required, and other appropriate considerations. All requests for public hearings during a comment period with an opportunity for a hearing must be requested in writing by interested persons within fourteen (14) days of the publication of the legal notice of the proposed permit to construct or within fourteen (14) days prior to the end of the comment period, whichever is later. (3-23-98)

b. For any new major facility or major modification which would affect a federal Class I area or an integral vista of a mandatory federal Class I area. (5-1-94)

i. If the Department is notified of the intent to apply for a permit to construct, it shall notify the appropriate Federal Land Manager within thirty (30) days; (5-1-94)

ii. A copy of the permit application and all relevant information, including an analysis of the anticipated effects on visibility in any federal Class I area, shall be sent to the Administrator of the U.S. Environmental Protection Agency and the Federal Land Manager within thirty (30) days of receipt of a complete application and at least sixty (60) days prior to any public hearing on the application; (5-1-94)

iii. Notice of every action related to the consideration of the permit shall be sent to the Administrator of the U.S. Environmental Protection Agency; (5-1-94)

iv. The public notice issued pursuant to Subsection 209.01.c.ii. shall indicate the opportunity for a public hearing for interested persons to appear and submit written or oral comments on the air quality effect of the new major facility or major modification, alternatives to it, the control technology required, and other appropriate considerations. All requests for public hearings during a comment period with an opportunity for a hearing must be requested in writing by interested persons within fourteen (14) days of the publication of the legal notice of the proposed permit to construct or within fourteen (14) days prior to the end of the comment period, whichever is later. (3-23-98)

v. The notice of public hearing, if required, shall explain any differences between the Department's preliminary determination and any visibility analysis performed by the Federal Land Manager and provided to the Department within thirty (30) days of the notification pursuant to Subsection 209.02.b.ii. (5-1-94)

vi. Upon a sufficient showing by the Federal Land Manager that a proposed new major facility or major modification will have an adverse impact upon the air quality related values (including visibility) of any federal mandatory Class I area, the Director may deny the application notwithstanding the fact that the concentrations of regulated air pollutants would not exceed the maximum allowable increases for a Class I area. (4-5-00)

03. Establishing a Good Engineering Stack Height. The Department will notify the public of the availability of any fluid model or field study used to establish a good engineering practice stack height and provide an opportunity for a public hearing before issuing a permit or setting an emission standard based thereon. (5-1-94)

04. Revisions of Permits to Construct. The Director may approve a revision of any permit to construct provided the stationary source or facility continues to meet all applicable requirements of Sections 200 through 228. Revised permits will be issued pursuant to procedures for issuing permits (Section 209), except that the requirements of Subsections 209.01.c., 209.02.a., and 209.02.b., shall only apply if the permit revision results in an increase in emissions authorized by the permit or if deemed appropriate by the Director. (7-1-02)

05. Permit to Construct Procedures for Tier I Sources. For Tier I sources that require a permit to construct, the owner or operator shall either: (5-1-94) a. Submit only the information required by Sections 200 through 219 for a permit to construct, in which case: (3-23-98)

i. A permit to construct or denial will be issued in accordance with Subsections 209.01.a. and 209.01.b. (5-1-94)

ii. The owner or operator may construct the source after permit to construct issuance or in accordance with Subsection 213.02.c. (3-23-98)

iii. The owner or operator may operate the source after permit to construct issuance so long as it does not violate any terms or conditions of the existing Tier I operating permit and complies with Subsection 380.02. (4-5-00)

iv. Unless a different time is prescribed by these rules, the applicable requirements contained in a permit to construct will be incorporated into the Tier I operating permit during renewal (Section 369). Where an existing Tier I permit would prohibit such construction or change in operation, the source must obtain a permit revision before commencing operation. Tier I sources required to meet the requirements under Section 112(g) of the Clean Air Act

(Section 214), or to have a permit under the preconstruction review program approved into the applicable implementation plan under Part C (Section 205) or Part D (Section 204) of Title I of the Clean Air Act, shall file a complete application to obtain a Tier I permit revision within twelve (12) months after commencing operation. (4-11-06)

v. The application or minor or significant permit modification request shall be processed in accordance with timelines: Section 361 and Subsections 367.02 through 367.05. (3-19-99)

vi. The final Tier I operating permit action shall incorporate the relevant terms and conditions from the permit to construct; or (4-5-00)

b. Submit all information required by Sections 200 through 219 for a permit to construct and Sections 300 through 386 for a Tier I operating permit, or Tier I operating permit modification, in which case: (4-5-00)

i. Completeness of the application shall be determined within thirty (30) days. (5-1-94)

ii. The Department shall prepare a proposed permit to construct or denial in accordance with Sections 200 through 219 and a draft Tier I operating permit or Tier I operating permit modification in accordance with Sections 300 through 386 within sixty (60) days. (4-5-00)

iii. The Department shall provide for public comment and affected state review in accordance with Sections 209, 364 and 365 on the proposed permit to construct or denial and draft Tier I operating permit or Tier I operating permit modification. (4-5-00)

iv. Except as otherwise provided by these rules, the Department shall prepare and issue to the owner or operator a final permit to construct or denial within fifteen (15) days of the close of the public comment period. The owner or operator may construct the source after permit to construct issuance or in accordance with Subsection 213.02.c. (4-5-00)

v. The final permit to construct will be sent to EPA, along with the proposed Tier I operating permit or modification. The proposed Tier I operating permit or modification shall be sent for review in accordance with Section 366. (4-5-00)

vi. The Tier I operating permit, or Tier I operating permit modification, will be issued in accordance with Section 367. The owner or operator may operate the source after permit to construct issuance so long as it does not violate any terms or conditions of the existing Tier I operating permit and complies with Subsection 380.02; or (4-5-00)

c. Submit all information required by Sections 200 through 219 for a permit to construct and Sections 300 through 381 for a Tier I operating permit, or Tier I operating permit modification, in which case: (4-5-00)

i. Completeness of the application shall be determined within thirty (30) days. (4-5-00)

ii. The Department shall prepare a draft permit to construct or denial in accordance with Sections 200 through 219 and that also meets the requirements of Sections 300 through 381 within sixty (60) days. (4-5-00)

iii. The Department shall provide for public comment and affected state review in accordance with Sections 209, 364, and 365 on the draft permit to construct or denial. (4-5-00)

iv. The Department shall prepare and send a proposed permit to construct or denial to EPA for review in accordance with Section 366. EPA review of the proposed permit to construct or denial in accordance with Section 366 can occur concurrently with public comment and affected state review of the draft permit, as provided in Subsection 209.05.c.iii. above, except that if the draft permit or denial is revised in response to public comment or affected state review, the Department must send the revised proposed permit to construct or denial to EPA for review in accordance with Section 366. (4-5-00)

v. Except as otherwise provided by these rules, the Department shall prepare and issue to the owner or operator a final permit to construct or denial in accordance with Section 367. The owner or operator may construct the source after permit to construct issuance or in accordance with Subsection 213.02.c. (4-5-00)

vi. The permittee may, at any time after issuance, request that the permit to construct requirements be incorporated into the Tier I operating permit through an administrative amendment in accordance with Section 381. The owner or operator may operate the source or modification upon submittal of the request for an administrative amendment. (4-5-00)

06. Transfer of Permits to Construct. (4-11-06)

a. Transfers by Revision. A permit to construct may be transferred to a new owner or operator in accordance with Subsection 209.04. (4-11-06)

b. Automatic Transfers. Any permit to construct, with or without transfer prohibition language, may be automatically transferred if: (4-11-06)

i. The current permittee notifies the Department at least thirty (30) days in advance of the proposed transfer date; (4-11-06)

ii. The notice provides written documentation signed by the current and proposed permittees containing a date for transfer of permit responsibility, designation of the proposed permittee's responsible official, and certification that the proposed permittee has reviewed and intends to operate in accordance with the permit terms and conditions; and (4-11-06)

iii. The Department does not notify the current permittee and the proposed permittee within thirty (30) days of receipt of the notice of the Department's determination that the permit must be revised pursuant to Subsection 209.04. If the Department does not issue such notice, the transfer is effective on the date provided in the notice described in Subsection 209.06.b.ii. (4-11-06)

The Milner Butte Landfill acknowledges the above procedures for issuing permits.

210. DEMONSTRATION OF PRECONSTRUCTION COMPLIANCE WITH TOXIC STANDARDS.
In accordance with Subsection 203.03, the applicant shall demonstrate preconstruction compliance with Section 161 to the satisfaction of the Department. The accuracy, completeness, execution and results of the demonstration are all subject to review and approval by the Department. (6-30-95)

The Milner Butte Landfill will demonstrate preconstruction compliance with Section 161.

01. Identification of Toxic Air Pollutants. The applicant may use process knowledge, raw materials inputs, EPA and Department references and commonly available references approved by EPA or the Department to identify the toxic air pollutants emitted by the stationary source or modification. (6-30-95)

The Milner Butte Landfill submitted the "Waste Industry Air Coalition Comparison of Recent Landfill Gas Analyses with Historic AP-42 Values" which was subsequently approved by the Department.

02. Quantification of Emission Rates. (6-30-95)

a. The applicant may use standard scientific and engineering principles and practices to estimate the emission rate of any toxic air pollutant at the point(s) of emission. (6-30-95)

i. Screening engineering analyses use unrefined conservative data. (6-30-95)

ii. Refined engineering analyses utilize refined and less conservative data including, but not limited to, emission factors requiring detailed input and actual emissions testing at a comparable emissions unit using EPA or Department approved methods. (6-30-95)

b. The uncontrolled emissions rate of a toxic air pollutant from a source or modification is calculated using the maximum capacity of the source or modification under its physical and operational design without the effect of any physical or operational limitations. (6-30-95)

i. Examples of physical and operational design include but are not limited to: the amount of time equipment operates during batch operations and the quantity of raw materials utilized in a batch process. (6-30-95)

ii. Examples of physical or operational limitations include but are not limited to: shortened hours of operation, use of control equipment, and restrictions on production which are less than design capacity. (6-30-95)

c. The controlled emissions rate of a toxic air pollutant from a source or modification is calculated using the maximum capacity of the source or modification under its physical and operational design with the effect of any physical or operational limitation that has been specifically described in a written and certified submission to the Department. (6-30-95)

d. The T-RACT emissions rate of a toxic air pollutant from a source or modification is calculated using the maximum capacity of the source or modification under its physical and operational design with the effect of: (6-30-95)

i. Any physical or operational limitation other than control equipment that has been specifically described in a written and certified submission to the Department; and (6-30-95)

ii. An emission standard that is T-RACT. (6-30-95)

The Milner Butte Landfill will quantify emission rates in accordance with the above procedures.

03. Quantification of Ambient Concentrations. (6-30-95)

a. The applicant may use the modeling methods provided in Subsection 202.02 to estimate the ambient concentrations at specified receptor sites for any toxic air pollutant emitted from the point(s) of emission. (6-30-95)

i. For screening modeling, the models use arbitrary meteorological data and predict maximum one (1) hour concentrations for all specified receptor sites. For toxic air pollutants listed in Section 586, multiply the maximum hourly concentration output from the model by a persistence factor of one hundred twenty five one-thousandths (0.125) to convert the hourly average to an annual average. For toxic air pollutants listed in Section 585, multiply the maximum hourly concentration output from the model by a persistence factor of four tenths (0.4) to convert the hourly concentration to a twenty-four (24) hour average. (6-30-95)

ii. For refined modeling, the models use site specific information. If actual meteorological data is used and the model predicts annual averages for toxic air pollutants listed in Section 586 and twenty-four (24) hour averages for toxic air pollutants listed in Section 585, persistence factors need not be used. (6-30-95)

b. The point of compliance is the receptor site that is estimated to have the highest ambient concentration of the toxic air pollutant of all the receptor sites that are located either at or beyond the facility property boundary or at a point of public access; provided that, if the toxic air pollutant is listed in Section 586, the receptor site is not considered to be at a point of public access if the receptor site is located on or within a road, highway or other transportation corridor transecting the facility. (6-30-95)

c. The uncontrolled ambient concentration of the source or modification is estimated by modeling the uncontrolled emission rate. (6-30-95)

d. The controlled ambient concentration of the source or modification is estimated by modeling the controlled emission rate. (6-30-95)

e. The approved net ambient concentration from a modification for a toxic air pollutant at each receptor is calculated by subtracting the estimated decreases in ambient concentrations for all sources at the facility contributing an approved creditable decrease at the receptor site from the estimated ambient concentration from the modification at the receptor. (6-30-95)

f. The approved offset ambient concentration from a source or modification for a toxic air pollutant at each receptor is calculated by subtracting the estimated decreases in ambient concentrations for all sources contributing an approved offset at the receptor from the estimated ambient concentration for the source or modification at the receptor. (6-30-95)

g. The T-RACT ambient concentration of the source or modification is estimated by using refined modeling and the T-RACT emission rate. (6-30-95)

h. The approved interpollutant ambient concentration from a source or modification for a toxic air pollutant at each receptor is calculated as follows: (6-30-95)

i. Step 1: Calculate the estimated decrease in ambient concentrations for each toxic air pollutant from each source contributing an approved interpollutant trade at the receptor by multiplying the approved interpollutant ratio by the overall decrease in the ambient concentration of the toxic air pollutant at the receptor site. (6-30-95)

ii. Step 2: Calculate the total estimated decrease at the receptor by summing all of the individual estimated decreases calculated in Subsection 210.03.h.i. for that receptor. (6-30-95)

iii. Step 3: Calculate the approved interpollutant ambient concentration by subtracting the total estimated decrease at the receptor from the estimated ambient concentration for the source or modification at the receptor. (6-30-95)

The Milner Butte Landfill will not require modeling for toxic air pollutants because the source is regulated by the Department under 40 CFR Part 60, 40 CFR Part 61 and 40 CFR Part 63 which is in accordance with IDAPA 58.01.01.210.20.

04. Preconstruction Compliance Demonstration. The applicant may use any of the Department approved standard methods described in Subsections 210.05 through 210.08, and may use any applicable specialized method described in Subsections 210.09 through 210.12 to demonstrate preconstruction compliance for each identified toxic air pollutant. (6-30-95)

05. Uncontrolled Emissions. (6-30-95)

a. Compare the source's or modification's uncontrolled emissions rate for the toxic air pollutant to the applicable screening emission level listed in Sections 585 or 586. (6-30-95)

b. If the source's or modification's uncontrolled emission rate is less than or equal to the applicable screening emission level, no further procedures for demonstrating preconstruction compliance will be required for that toxic air pollutant as part of the application process. (6-30-95)

06. Uncontrolled Ambient Concentration. (6-30-95)

a. Compare the source's or modification's uncontrolled ambient concentration at the point of compliance for the toxic air pollutant to the applicable acceptable ambient concentration listed in Sections 585 or 586. (6-30-95)

b. If the source's or modification's uncontrolled ambient concentration at the point of compliance is less than or equal to the applicable acceptable ambient concentration, no further procedures for demonstrating preconstruction compliance will be required for that toxic air pollutant as part of the application process. (6-30-95)

07. Controlled Emissions and Uncontrolled Ambient Concentration. (6-30-95)

a. Compare the source's or modification's controlled emissions rate for the toxic air pollutant to the applicable screening emission level listed in Sections 585 or 586 and compare the source's or modification's uncontrolled ambient concentration at the point of compliance for the toxic air pollutant to the applicable acceptable ambient concentration listed in Sections 585 or 586. (6-30-95)

b. If the source's or modification's controlled emission rate is less than or equal to the applicable screening emission level and if the source's or modification's uncontrolled ambient concentration at the point of compliance is less than or equal to the applicable acceptable ambient concentration, no further procedures for demonstrating preconstruction compliance will be required for that toxic air pollutant as part of the application process. (6-30-95)

08. Controlled Ambient Concentration. (6-30-95)

a. Compare the source's or modification's controlled ambient concentration at the point of compliance for the toxic air pollutant to the applicable acceptable ambient concentration listed in Sections 585 or 586. (6-30-95)

b. If the source's or modification's controlled ambient concentration at the point of compliance is less than or equal to the applicable acceptable ambient concentration, no further procedures for demonstrating preconstruction compliance will be required for that toxic air pollutant as part of the application process. (6-30-95)

c. The Department shall include an emission limit for the toxic air pollutant in the permit to construct that is equal to or, if requested by the applicant, less than the emission rate that was used in the modeling. (6-30-95)

The Milner Butte Landfill will not require preconstruction compliance demonstrations described in Subsection 210.05 through 210.08 for toxic air pollutants because the source is regulated by the Department under 40 CFR Part 60, 40 CFR Part 61 and 40 CFR Part 63 which is in accordance with IDAPA 58.01.01.210.20.

09. Net Emissions. (6-30-95)

a. As provided in Section 007 (definition of net emissions increase) and Sections 460 and 461, the owner or operator may net emissions to demonstrate preconstruction compliance. (4-5-00)

b. Compare the modification's approved net emissions increase (expressed as an emission rate) for the toxic air pollutant to the applicable screening emission level listed in Sections 585 or 586. (6-30-95)

c. If the modification's approved net emissions increase is less than or equal to the applicable screening emission level, no further procedures for demonstrating preconstruction compliance will be required for that toxic air pollutant as part of the application process. (6-30-95)

d. The Department shall include emission limits and other permit terms for the toxic air pollutant in the permit to construct that assure that the facility will be operated in the manner described in the preconstruction compliance demonstration. (6-30-95)

10. Net Ambient Concentration. (6-30-95)

a. As provided in Section 007 (definition of net emission increase) and Sections 460 and 461, the owner or operator may net ambient concentrations to demonstrate preconstruction compliance. (4-5-00)

b. Compare the modification's approved net ambient concentration at the point of compliance for the toxic air pollutant to the applicable acceptable ambient concentration listed in Sections 585 or 586. (6-30-95)

c. If the modification's approved net ambient concentration at the point of compliance is less than or equal to the applicable acceptable ambient concentration, no further procedures for demonstrating preconstruction compliance will be required for that toxic air pollutant as part of the application process. (6-30-95)

d. The Department shall include emission limits and other permit terms for the toxic air pollutant in the permit to construct that assure that the facility will be operated in the manner described in the preconstruction compliance demonstration. (6-30-95)

11. Toxic Air Pollutant Offset Ambient Concentration. (6-30-95)

a. As provided in Sections 206 and 460, the owner or operator may use offsets to demonstrate preconstruction compliance. (6-30-95)

b. Compare the source's or modification's approved offset ambient concentration at the point of compliance for the toxic air pollutant to the applicable acceptable ambient concentration listed in Sections 585 or 586. (6-30-95)

c. If the source's or modification's approved offset ambient concentration at the point of compliance is less than or equal to the applicable acceptable ambient concentration, no further procedures for demonstrating preconstruction compliance will be required for that toxic air pollutant as part of the application process. (6-30-95)

d. The Department shall include emission limits and other permit terms for the toxic air pollutant in the permit to construct that assure that the facility will be operated in the manner described in the preconstruction compliance demonstration. (6-30-95)

12. T-RACT Ambient Concentration for Carcinogens. (6-30-95)

a. As provided in Subsections 210.12 and 210.13, the owner or operator may use T-RACT to demonstrate preconstruction compliance for toxic air pollutants listed in Section 586. (6-30-95)

i. This method may be used in conjunction with netting (Subsection 210.09), and offsets (Subsection 210.11). (6-30-95)

ii. This method is not to be used to demonstrate preconstruction compliance for toxic air pollutants listed in Section 585. (6-30-95)

b. Compare the source's or modification's approved T-RACT ambient concentration at the point of compliance for the toxic air pollutant to the amount of the toxic air pollutant that would contribute an ambient air cancer risk probability of less than one to one hundred thousand (1:100,000) (which amount is equivalent to ten (10) times the applicable acceptable ambient concentration listed in Section 586). (6-30-95)

c. If the source's or modification's approved T-RACT ambient concentration at the point of compliance is less than or equal to the amount of the toxic air pollutant that would contribute an ambient air cancer risk probability of less than one to one hundred thousand (1:100,000), no further procedures for demonstrating preconstruction compliance will be required for that toxic air pollutant as part of the application process. (6-30-95)

d. The Department shall include emission limits and other permit terms for the toxic air pollutant in the permit to construct that assure that the facility will be operated in the manner described in the preconstruction compliance demonstration. (6-30-95)

The Milner Butte Landfill will not require preconstruction compliance demonstrations described in Subsection 210.09 through 210.12 for toxic air pollutants because the source is regulated by the Department under 40 CFR Part 60, 40 CFR Part 61 and 40 CFR Part 63 which is in accordance with IDAPA 58.01.01.210.20.

13. T-RACT Determination Processing. (6-30-95)

a. The applicant may submit all information necessary to the demonstration at the time the applicant submits the complete initial application or the applicant may request the Department to review a complete initial application to determine if Subsection 210.12 may be applicable to the source or modification. (6-30-95)

b. Notwithstanding Subsections 209.01.a. and 209.01.b., if the applicant requests the Department to review a complete initial application and Subsection 210.12 is determined to be applicable, the completeness determination for the initial application will be revoked until a supplemental application is submitted and determined complete. When the supplemental application is determined complete, the timeline for agency action shall be reinitiated. (6-30-95)

14. T-RACT Determination. T-RACT shall be determined on a case-by-case basis by the Department as follows: (6-30-95)

a. The applicant shall submit information to the Department identifying and documenting which control technologies or other requirements the applicant believes to be T-RACT. (5-1-94)

b. The Department shall review the information submitted by the applicant and determine whether the applicant has proposed T-RACT. (5-1-94)

c. The technological feasibility of a control technology or other requirements for a particular source shall be determined considering several factors including, but not limited to: (5-1-94)

i. Process and operating procedures, raw materials and physical plant layout. (5-1-94)

ii. The environmental impacts caused by the control technology that cannot be mitigated, including, but not limited to, water pollution and the production of solid wastes. (5-1-94)

iii. The energy requirements of the control technology. (5-1-94)

d. The economic feasibility of a control technology or other requirement, including the costs of necessary mitigation measures, for a particular source shall be determined considering several factors including, but not limited to: (5-1-94)

i. Capital costs. (5-1-94)

ii. Cost effectiveness, which is the annualized cost of the control technology divided by the amount of emission reduction. (5-1-94)

iii. The difference in costs between the particular source and other similar sources, if any, that have implemented emissions reductions. (5-1-94)

e. If the Department determines that the applicant has proposed T-RACT, the Department shall determine which of the options, or combination of options, will result in the lowest emission of toxic air pollutants, develop the emission standards constituting T-RACT and incorporate the emission standards into the permit to construct. (5-1-94)

f. If the Department determines that the applicant has not proposed T-RACT, the Department shall disapprove the submittal. If the submittal is disapproved, the applicant may supplement its submittal or demonstrate preconstruction compliance through a different method provided in Section 210. If the applicant does not supplement its submittal or demonstrate preconstruction compliance through a different method provided in Section 210, the Department shall deny the permit. (6-30-95)

The Milner Butte Landfill acknowledges the above requirement for T-RACT determination.

15. Short Term Source Factor. For short term sources, the applicant may utilize a short term adjustment factor of ten (10). For a carcinogen, multiply either the applicable acceptable ambient concentration (AACC) or the screening emission rate, but not both, by ten (10), to demonstrate preconstruction compliance. This method may be used for TAPs listed in Section 586 only and may be utilized in conjunction with standard methods for quantification of emission rates (Subsections 210.05 through 210.08). (4-5-00)

The Milner Butte Landfill is not considered a short term source.

16. Environmental Remediation Source. (6-30-95)

a. For Remediation sources subject to or regulated by the Resource Conservation and Recovery Act (42 U.S.C. Sections 6901-6992k) and the "Idaho Rules and Standards for Hazardous Waste," (IDAPA 58.01.05.000 et seq.) or the Comprehensive Environmental Response, Compensation and Liability Act (42 U.S.C. 6901-6992k) or a consent order, if the estimated ambient concentration at the point of impact is greater than the acceptable ambient impacts listed in Sections 585 and 586, Best Available Control Technology shall be applied and operated until the estimated uncontrolled emissions from the remediation source are below the acceptable ambient concentration. (6-30-95)

b. For Remediation sources not subject to or regulated by the Resource Conservation and Recovery Act (42 U.S.C. Sections 6901-6992k) and the "Idaho Rules and Standards for Hazardous Waste," (IDAPA 58.01.05.000 et seq.) or the Comprehensive Environmental Response, Compensation and Liability Act (42 U.S.C. 6901-6992k) or a consent order, shall, for the purposes of these rules, be considered the same as any other new or modified source of toxic air pollution. (6-30-95)

c. For an environmental remediation source that functions to remediate or recover any release, spill, leak, discharge or disposal of any petroleum product or petroleum substance, the Department may waive the requirements of Section 513 of these rules. (3-15-02)

The Milner Butte Landfill is not subject to or regulated by RCRA or the "Idaho Rules and Standards for Hazardous Waste".

17. Interpollutant Trading Ambient Concentration. (6-30-95)

a. As provided in Subsections 209.01.c., 210.17 through 210.19, the owner or operator may use interpollutant trading to demonstrate preconstruction compliance. This method may be used in conjunction with netting (Subsection 210.10), and offsets (Subsection 210.11) (6-30-95)

b. Compare the source's or modification's approved interpollutant ambient concentration at the point of compliance for the toxic air pollutant emitted by the source or modification to the applicable acceptable ambient concentration listed in Sections 585 or 586. (6-30-95)

c. If the source's or modification's approved interpollutant ambient concentration at the point of compliance is less than or equal to the applicable acceptable ambient concentration listed in Sections 585 or 586, no further procedures for demonstrating preconstruction compliance will be required for that toxic air pollutant as part of the application process. (6-30-95)

d. The Department shall include emission limits for all of the toxic air pollutants involved in the trade in the permit to construct. The Department shall also include other permit terms in the permit to construct that assure that the facility will be operated in the manner described in the preconstruction compliance demonstration. (6-30-95)

18. Interpollutant Trading Determination Processing. (6-30-95)

a. The applicant may submit all information necessary to the demonstration at the time the applicant submits the complete initial application or the applicant may request the Department to review a complete initial application to determine if Subsection 210.17 may be applicable to the source or modification. (6-30-95)

b. Notwithstanding Subsections 209.01.a. and 209.01.b., if the applicant requests the Department to review a complete initial application and Subsection 210.17 is determined to be applicable, the completeness determination for the initial application will be revoked until a supplemental application is submitted and determined complete. When the supplemental application is determined complete, the timeline for agency action shall be reinitiated. (6-30-95)

19. Interpollutant Determination. (6-30-95)

a. The applicant may request an interpollutant trade if the Department determines that: (6-30-95)

i. The facility complies with an emission standard at least as stringent as best available control technology (BACT); and (6-30-95)

ii. The owner or operator has instituted all known and available methods of pollution prevention at the facility to reduce, avoid or eliminate toxic air pollution prior to its generation including, but not limited to, recycling, chemical substitution, and process modification provided that such pollution prevention methods are compatible with each other and the product or service being produced; and (6-30-95)

iii. The owner or operator has taken all available offsets; and (6-30-95)

iv. The owner or operator has identified all geographical areas and populations that may be impacted by the proposed interpollutant trade. (6-30-95)

b. Interpollutant trades shall be approved or denied on a case-by-case basis by the Department. Denials shall be within the discretion of the Department. Approvals shall be granted only if: (6-30-95)

i. The Department of Health and Welfare’s Division of Health approves the interpollutant trade; and (6-30-95)

ii. The Department of Environmental Quality determines that the interpollutant trade will result in a overall benefit to the environment; and (6-30-95)

iii. An EPA approved database or other EPA approved reference provides relative potency factors, or comparable factors, or other data that is sufficient to allow for adequate review and approval of the proposed trade by the Department and the Department of Health and Welfare’s Division of Health is submitted for all of the toxic air pollutants being traded; and (6-30-95)

iv. The reductions occur at the same facility where the proposed source or modification will be constructed; and (6-30-95)

v. The interpollutant trade will not cause an increase in sum of the ambient concentrations of the carcinogenic toxic air pollutants involved in the particular interpollutant trade at any receptor site; and (6-30-95)

vi. The total cancer risk with the interpollutant trade will be less than the total cancer risk without the interpollutant trade; and (6-30-95)

vii. The total non-cancer health risk with the interpollutant trade will be less than the total non-cancer health risk without the interpollutant trade. (6-30-95)

The Milner Butte Landfill is not proposing to use interpollutant trading to demonstrate compliance with emission requirements.

20. NSPS and NESHAP Sources. (6-30-95)

a. If the owner or operator demonstrates that the toxic air pollutant from the source or modification is regulated by the Department at the time of permit issuance under 40 CFR Part 60, 40 CFR Part 61 or 40 CFR Part

63, no further procedures for demonstrating preconstruction compliance will be required under Section 210 for that toxic air pollutant as part of the application process. (6-30-95)

b. If the owner or operator demonstrates that the toxic air pollutant from the source or modification is regulated by the EPA at the time of permit issuance under 40 CFR Part 60, 40 CFR Part 61 or 40 CFR Part 63 and the permit to construct issued by the Department contains adequate provisions implementing the federal standard, no further procedures for demonstrating preconstruction compliance will be required under Section 210 for that toxic air pollutant as part of the application process. (6-30-95)

The Milner Butte Landfill is regulated by the Department under 40 CFR Part 60, 40 CFR Part 61 and 40 CFR Part 63 and is therefore not required to demonstrate preconstruction compliance under Section 210 for toxic air pollutants as part of the application process.

21. Permit Compliance Demonstration. Additional procedures and requirements to demonstrate and ensure actual and continuing compliance may be required by the Department in the permit to construct. (5-1-94)

The Milner Butte Landfill acknowledges that additional permit compliance demonstrations may be required by the Department.

22. Interpretation and Implementation of Other Sections. Except as specifically provided in other sections of these rules, the provisions of Section 210 are not to be utilized in the interpretation or implementation of any other section of these rules. (6-30-95)

The Milner Butte Landfill acknowledges the above interpretation and implementation of Section 210 with other sections of these rules.

211. CONDITIONS FOR PERMITS TO CONSTRUCT.

01. Reasonable Conditions. The Department may impose any reasonable conditions upon an approval, including conditions requiring the stationary source or facility to be provided with: (5-1-94)

a. Sampling ports of a size, number, and location as the Department may require; (5-1-94)

b. Safe access to each port; (5-1-94)

c. Instrumentation to monitor and record emissions data; (5-1-94)

d. Instrumentation for ambient monitoring to determine the effect emissions from the stationary source or facility may have, or are having, on the air quality in any area affected by the stationary source or facility; and (5-1-94)

e. Any other sampling and testing facilities as may be deemed reasonably necessary. (5-1-94)

02. Cancellation. The Department may cancel a permit to construct if the construction is not begun within two (2) years from the date of issuance, or if during the construction, work is suspended for one (1) year. (5-1-94)

03. Notification to The Department. Any owner or operator of a stationary source or facility subject to a permit to construct shall furnish the Department written notifications as follows: (5-1-94)

a. A notification of the anticipated date of initial start-up of the stationary source or facility not more than sixty (60) days or less than thirty (30) days prior to such date; and (5-1-94)

b. A notification of the actual date of initial start-up of the stationary source or facility within fifteen (15) days after such date. (5-1-94)

04. Performance Test. Within sixty (60) days after achieving the maximum production rate at which the stationary source or facility will be operated but not later than one hundred eighty (180) days after initial start-up of such stationary source or facility, the owner or operator of such stationary source or facility may be required to conduct a performance test in accordance with methods and under operating conditions approved by the Department and furnish the Department a written report of the results of such performance test. (5-1-94)

a. Such test shall be at the expense of the owner or operator. (5-1-94)

b. The Department may monitor such test and may also conduct performance tests. (5-1-94)

c. The owner or operator of a stationary source or facility shall provide the Department fifteen (15) days prior notice of the performance test to afford the Department the opportunity to have an observer present. (5-1-94)

The Milner Butte Landfill acknowledges the above conditions for permits to construct.

212. OBLIGATION TO COMPLY.

01. Responsibility to Comply with All Requirements. Receiving a permit to construct shall not relieve any owner or operator of the responsibility to comply with all applicable local, state and federal statutes, rules and regulations. (5-1-94)

02. Relaxation of Standards or Restrictions. At such time that a particular facility or modification becomes a major facility or major modification solely by virtue of a relaxation in any enforceable emission standard or restriction on the operating rate, hours of operation or on the type or amount of material combusted, stored or processed, which was used to exempt the facility or modification from certain requirements for a permit to construct, the requirements for new major facilities or major modifications shall apply to the facility or modification as though construction had not yet commenced. (5-1-94)

The Milner Butte Landfill acknowledges the above obligations to comply with all requirements.

213. PRE-PERMIT CONSTRUCTION.

This section describes how owners or operators may commence construction or modification of certain stationary sources before obtaining the required permit to construct. (3-23-98)

01. Pre-Permit Construction Eligibility. Pre-permit construction approval is available for non-major sources and non-major modifications and for new sources or modifications proposed in accordance with Subsection 213.01.d. Pre-permit construction is not available for any new source or modification that: uses emissions netting to stay below major source levels; uses optional offsets pursuant to Section 206; or would have an adverse impact on the air quality related values of any Class I area. Owners or operators may ask the Department for the ability to commence construction or modification of qualifying sources under Section 213 before receiving the required permit to construct. To obtain the Department's pre-permit construction approval, the owner or operator shall satisfy the following requirements: (4-5-00)

a. The owner or operator shall apply for a permit to construct in accordance with Subsections 202.01.a., 202.02, and 202.03 of this chapter. (3-23-98)

b. The owner or operator shall consult with Department representatives prior to submitting a pre-permit construction approval application. (3-23-98)

c. The owner or operator shall submit a pre-permit construction approval application which must contain, but not be limited to: a letter requesting the ability to construct before obtaining the required permit to construct, a copy of the notice referenced in Subsection 213.02; proof of eligibility; process description(s); equipment list(s); proposed emission limits and modeled ambient concentrations for all regulated air pollutants and toxic air pollutants, such that they demonstrate compliance with all applicable air quality rules and regulations. The models shall be conducted in accordance with Subsection 202.02 and with written Department approved protocol and submitted with sufficient detail so that modeling can be duplicated by the Department. (4-11-06)

d. Owners or operators seeking limitations on a source's potential to emit such that permitted emissions will be either below major source levels or below a significant increase must describe in detail in the pre-permit construction application the proposed restrictions and certify in accordance with Section 123 that they will comply with the restrictions, including any applicable monitoring and reporting requirements. (3-23-98)

02. Permit to Construct Procedures for Pre-Permit Construction. (3-23-98)

a. Within ten (10) days after the submittal of the pre-permit construction approval application, the owner or operator shall hold an informational meeting in at least one (1) location in the region in which the stationary source or facility is to be located. The informational meeting shall be made known by notice published at least ten (10) days before the meeting in a newspaper of general circulation in the county(ies) in which the stationary source or facility is to be located. A copy of such notice shall be included in the application. (3-23-98)

b. Within fifteen (15) days after the receipt of the pre-permit construction approval application, the Department shall notify the owner or operator in writing of pre-permit construction approval or denial. The Department may deny the pre-permit construction approval application for any reason it deems valid. (3-23-98)

c. Upon receipt of the pre-permit construction approval letter issued by the Department, the owner or operator may begin construction at their own risk as identified in Subsection 213.02.d. Upon issuance of the pre-permit construction approval letter, any and all potential to emit limitations addressed in the pre-permit construction application pursuant to Subsection 213.01.d. shall become enforceable. The owner or operator shall not operate those emissions units subject to permit to construct requirements in accordance with Section 200 unless and until issued a permit pursuant to Section 209. (5-3-03)

d. If the pre-permit construction approval application is determined incomplete or the permit to construct is denied, the Department shall issue an incompleteness or denial letter pursuant to Section 209. If the Department denies the permit to construct, then the owner or operator shall have violated Section 201 on the date it commenced construction as defined in Section 006. The owner or operator shall not contest the final permit to construct decision based on the fact that they have already begun construction. (3-23-98)

The Milner Butte Landfill acknowledges the above requirement for pre-permit construction.

214. DEMONSTRATION OF PRECONSTRUCTION COMPLIANCE FOR NEW AND RECONSTRUCTED MAJOR SOURCES OF HAZARDOUS AIR POLLUTANTS.

01. Permitting Authority. For purposes of this section, Sections 112(g) and (j) of the Clean Air Act, and 40 CFR Part 63, the permitting authority shall be the Department. (3-19-99)

02. Definitions. Unless specifically provided otherwise, the definitions for terms set forth in this section shall be the definitions set forth in Section 112 of the Clean Air Act and 40 CFR Part 63 as incorporated by reference into these rules at Section 107. For purposes of determining if a source is a major source of hazardous air pollutants, the definition of potential to emit at Section 006 of these rules shall apply. (3-19-99)

03. Compliance with Federal MACT. All owners or operators of major sources of hazardous air pollutants which are subject to an applicable Maximum Available Control Technology (MACT) standard promulgated by EPA pursuant to Section 112 of the Clean Air Act and 40 CFR Part 63 shall comply with the applicable MACT standard and such owners or operators are not subject to Subsections 214.04 and 214.05. (3-19-99)

04. Requirement to Obtain Preconstruction Mact Determination from the Director. No owner or operator may construct or reconstruct a major source of hazardous air pollutants unless such owner or operator has obtained a MACT standard determination from the Director. The Director shall make the MACT standard determination on a case by case basis and in accordance with Section 112(g)(2)(B) of the Clean Air Act and 40 CFR 63.40 through 63.44 as incorporated by reference into these rules at Section 107. (3-19-99)

05. Development of Mact by the Director After EPA Deadline. In the event that EPA fails to promulgate a MACT standard for a category or subcategory of major sources of hazardous air pollutants identified by the EPA under the Clean Air Act by the date established under Section 112(e) of the Clean Air Act, the owner or operator of any major source of hazardous air pollutants in such category or subcategory shall submit an application to the Director for a MACT standard determination. The Director shall make the MACT standard determination on a case by case basis and in accordance with Section 112(j) of the Clean Air Act and 40 CFR 63.50 through 63.56 as incorporated by reference into these rules at Section 107. (3-19-99)

The Milner Butte Landfill is not considered a major source of HAPs.

300. PROCEDURES AND REQUIREMENTS FOR TIER I OPERATING PERMITS.

301. REQUIREMENT TO OBTAIN TIER I OPERATING PERMIT.

The purposes of Sections 300 through 399 are to establish requirements and procedures for the issuance of Tier I operating permits. (7-1-02)

01. Prohibition. No owner or operator shall operate, or allow or tolerate the operation of, any Tier I source without an effective Tier I operating permit. (5-1-94)

02. Exceptions. (3-23-98)

a. No Tier I operating permit is required if the owner or operator is in compliance with Sections 311 through 315 and the Department has not taken final action on the application. (5-1-94)

b. Tier I sources not located at major facilities do not require a Tier I operating permit until: (3-23-98)

i. December 31, 1997 for Phase II sulfur dioxide sources; (3-23-98)

ii. January 1, 1999 for Phase II nitrogen oxides sources; (3-23-98)

iii. January 1, 2000 for solid waste incineration units required to obtain a permit pursuant to 42 U.S.C. Section 7429(e); and (3-23-98)

iv. The source becomes a Tier I source under Section 006 of this chapter. (4-11-06)

c. No Tier I operating permit is required for the following Tier I sources: (5-1-94)
i. All sources and source categories that would be required to obtain a permit solely because they are subject to 40 CFR Part 60, Subpart AAA; and (5-1-94)
ii. All sources and source categories that would be required to obtain a permit solely because they are subject to 40 CFR Part 61.145. (5-1-94)

The Milner Butte Landfill acknowledges the requirements to obtain a Tier I operating permit.

302. OPTIONAL TIER I OPERATING PERMIT.
Any facility listed in Section 301 not required to obtain a Tier I operating permit may opt to apply for a Tier I operating permit. (3-23-98)

The Milner Butte Landfill is required to obtain a Tier I operating permit.

311. STANDARD PERMIT APPLICATIONS.
The purpose of Sections 311 through 315 is to establish standard Tier I operating permit application procedures. (5-1-94)

The Milner Butte Landfill acknowledges the purpose of Section 311.

312. DUTY TO APPLY.
For each Tier I source, the owner or operator shall submit a timely and complete permit application in accordance with Sections 311 through 315. (5-1-94)

The Milner Butte Landfill acknowledges the duty to apply.

313. TIMELY APPLICATION.
01. Original Tier I Operating Permits. (5-1-94)
a. For Tier I sources existing on May 1, 1994, the owner or operator of the Tier I source shall submit to the Department a complete application for an original Tier I operating permit by no later than June 1, 1996, or within twelve (12) months of EPA approval of the Tier I operating program, whichever is earlier, unless: (3-20-97)
i. The Department provides written notification of an earlier date to the owner or operator. (5-1-94)
ii. The Tier I source is identified in Subsections 301.02.b. or 301.02.c. (5-1-94)
b. For sources that become Tier I sources after May 1, 1994, that are located at a facility not previously authorized by a Tier I operating permit, the owner or operator of the Tier I source shall submit to the Department a complete application for an original Tier I operating permit within twelve (12) months after becoming a Tier I source or commencing operation, unless: (3-23-98)
i. The Department provides written notification of an earlier date to the owner or operator. (5-1-94)
ii. The Tier I source is identified in Subsections 301.02.b. or 301.02.c. (5-1-94)
c. For initial phase II acid rain sources identified in Subsections 301.02.b.i. or 301.02.b.ii., the owner or operator of the initial Phase II acid rain source shall submit to the Department a complete application for an original Tier I operating permit by January 1, 1996 for sulfur dioxide, and by January 1, 1998 for nitrogen oxides. (3-23-98)
d. For Tier I sources identified in Subsection 301.02.b.iii.: (3-23-98)
i. Existing on July 1, 1998, the owner or operator of the Tier I source shall submit to the Department a complete application for an original Tier I operating permit by no later than January 1, 1999, unless the Department provides written notification of an earlier date to the owner or operator. (3-23-98)
ii. That become Tier I sources after July 1, 1998, located at a facility not previously authorized by a Tier I operating permit, the owner or operator of the Tier I source shall submit to the Department a complete application for an original Tier I operating permit within twelve (12) months after becoming a Tier I source or commencing operation, unless the Department provides written notification of an earlier date to the owner or operator. (3-23-98)
02. Earlier Dates During Initial Period. Except as otherwise provided in these rules, during the initial period which begins May 1, 1994 and ends three (3) years after EPA approval of the Tier I operating program, the Department may designate Tier I sources for processing as follows: (5-1-94)

a. The Department may develop a general estimate of the total work load and benefits associated with the Tier I operating permit applications that are predicted to be submitted during the initial period including, but not limited to, original permit applications and significant permit modification applications. (3-19-99)

b. Considering the complexity of the applications, air quality benefits of permitting and requests for early actions from owners and operators, the Department may divide the applications into three (3) groups each representing approximately one-third (1/3) of the total work load and benefits. (5-1-94)

c. The Department may prioritize the three (3) groups and the Tier I sources within each group for processing, establish early application deadlines and notify the owners or operators of the Tier I sources in the group in writing of a required submittal date earlier than the general deadlines provided in Subsection 313.01. (5-1-94)

03. Renewals of Tier I Operating Permits. The owner or operator of the Tier I source shall submit a complete application to the Department for a renewal of the Tier I operating permit at least six (6) months before, but no earlier than eighteen (18) months before, the expiration date of the existing Tier I operating permit. To ensure that the term of the operating permit does not expire before the permit is renewed, the owner or operator is encouraged to submit the application nine (9) months prior to expiration. (4-5-00)

04. Changes to Tier I Operating Permits. Sections 380 through 386 provide the requirements and procedures for changes at Tier I sources and to Tier I operating permits. (3-19-99)

The Milner Butte Landfill commenced construction before May 1, 1994.

314. REQUIRED STANDARD APPLICATION FORM AND REQUIRED INFORMATION.

01. General Requirements. (5-1-94)

a. Applications shall be submitted on a form or forms provided by the Department or by other means prescribed by these rules or the Department. The application shall be certified by the responsible official in accordance with Section 123. (5-1-94)

i. If the Tier I source is regulated under 42 U.S.C. Sections 7651 through 7651o, the owner or operator shall also submit nationally-standardized acid rain forms provided by EPA. (5-1-94)

b. All information shall be in sufficient detail so that the Department may efficiently and effectively determine the applicability of requirements and make all other necessary evaluations and determinations. (5-1-94)

02. General Information for the Facility. (5-1-94)

a. Provide identifying information, including the name, address and telephone number of: (5-1-94)

i. The owner; (5-1-94)

ii. The operator; (5-1-94)

iii. The facility where the Tier I source is located; (5-1-94)

iv. The registered agent of the owner, if any; (5-1-94)

v. The registered agent of the operator, if any; (5-1-94)

vi. The responsible official, if other than the owner or operator; and (5-1-94)

vii. The contact person. (5-1-94)

b. Provide a general description of the processes used and products produced by the facility where the Tier I source is located, including any associated with each requested alternative operating scenario and trading scenario. The description shall include narrative and applicable SIC codes. (5-1-94)

c. Provide a general description of each process line affecting a Tier I source. (5-1-94)

03. Specific Information for Each Emissions Unit. The owner or operator shall provide, in an itemized format, all of the information identified in Subsections 314.04 through 314.11 for each emissions unit, unless the emissions unit is an insignificant activity. (4-5-00)

04. Emissions. (5-1-94)

a. Identify and describe all emissions of pollutants for which the source is major and all emissions of regulated air pollutants from each emissions unit. Fugitive emissions shall be included in the application in the same manner as stack emissions, regardless of whether the source category is included in the list of sources contained in the definition of major facility (Section 008). (3-23-98)

b. Emissions rates shall be quantified in tons per year (tpy) or for radionuclides the effective dose equivalent (EDE) in millirem per year and in such additional terms as are necessary to determine compliance consistent with the applicable test method. (4-5-00)

c. Identify and describe all points of emissions in sufficient detail to establish the basis for fees and applicability of requirements of the Clean Air Act. (3-20-97)

d. To the extent it is needed to determine or regulate emissions, identify and quantify all fuels, fuel use, raw materials, production rates, and operating schedules. (5-1-94)

e. Identify and describe all air pollution control equipment and compliance monitoring devices or activities. (5-1-94)

f. Identify and describe all limitations on source operation or any work practice standards affecting emissions. (5-1-94)

g. Provide the calculations on which the information provided under Subsections 314.04.a. through 314.04.e. is based. (4-5-00)

05. Applicable Requirements. (5-1-94)

a. Cite and describe all applicable requirements affecting the emissions unit; and (5-1-94)

b. Describe or reference all methods required by each applicable requirement for determining the compliance status of the emissions unit with the applicable requirement, including any applicable monitoring, recordkeeping and reporting requirements or test methods. (5-1-94)

06. Other Requirements. Other specific information that may be necessary to determine the applicability of, implement or enforce any requirement of the Act, these rules, 42 U.S.C. Sections 7401 through 7671q or federal regulations. (5-1-94)

07. Proposed Determinations of Nonapplicability. Identify requirements for which the applicant seeks a determination of nonapplicability and provide an explanation of why the requirement is not applicable to the Tier I source. (3-23-98)

08. Alternative Operating Scenarios. (5-1-94)

a. Identify all requested alternative operating scenarios. (5-1-94)

b. Provide a detailed description of all requested alternative operating scenarios. Include all the information required by Section 314 that is relevant to the alternative operating scenario. (5-1-94)

09. Compliance Certifications. (5-1-94)

a. Provide a compliance certification regarding the compliance status of each emissions unit at the time the application is submitted to the Department that: (5-1-94)

i. Identifies all applicable requirements affecting each emissions unit. (5-1-94)

ii. Certifies the compliance status of each emissions unit with each of the applicable requirements. (5-1-94)

iii. Provides a detailed description of the method(s) used for determining the compliance status of each emissions unit with each applicable requirement, including a description of any monitoring, recordkeeping, reporting and test methods that were used. Also provide a detailed description of the method(s) required for determining compliance. (5-1-94)

iv. Certifies the compliance status of the emissions unit with any applicable enhanced monitoring requirements. (5-1-94)

v. Certifies the compliance status of the emissions unit with any applicable enhanced compliance certification requirements. (5-1-94)

vi. Provides all other information necessary to determining the compliance status of the emissions unit. (5-1-94)

b. Provide a schedule for submission of compliance certifications during the term of the Tier I operating permit. The schedule shall require compliance certifications to be submitted no less frequently than annually, or more frequently if specified by the underlying applicable requirement or by the Department. (5-1-94)

10. Compliance Plans. (5-1-94)

a. Provide a compliance description as follows: (5-1-94)

i. For each applicable requirement with which the emissions unit is in compliance, state that the emissions unit will continue to comply with the applicable requirement. (5-1-94)

ii. For each applicable requirement that will become effective during the term of the Tier I operating permit that does not contain a more detailed schedule, state that the emissions unit will meet the applicable requirement on a timely basis. (5-1-94)

iii. For each applicable requirement that will become effective during the term of the Tier I operating permit that contains a more detailed schedule, state that the emissions unit will comply with the applicable requirement on the schedule provided in the applicable requirement. (5-1-94)

iv. For each applicable requirement with which the emission unit is not in compliance, state that the emissions unit will be in compliance with the applicable requirement by the time the Tier I operating permit is issued or provide a compliance schedule in accordance with Subsection 314.10.b. (4-5-00)

b. All compliance schedules shall: (5-1-94)

i. Include a schedule of remedial measures leading to compliance, including an enforceable sequence of actions and specific dates for achieving milestones and achieving compliance. (4-5-00)

ii. Incorporate the terms and conditions of any applicable consent order, judicial order, judicial consent decree, administrative order, settlement agreement or judgment. (5-1-94)

iii. Be supplemental to, and shall not sanction noncompliance with, the applicable requirements on which it is based. (5-1-94)

c. Provide a schedule for submission to the Department of periodic progress reports no less frequently than every six (6) months or at a more frequent period if one (1) is specified in the underlying applicable requirement or by the Department. (4-5-00)

11. Trading Scenarios. (5-1-94)

a. Identify all requested trading scenarios, including alternative emissions limits (bubbles) authorized by Section 440. (5-1-94)

b. Provide a detailed description of all requested trading scenarios. Include all the information required by Section 314 that is relevant to the trading scenario and all the information required by Section 440, if applicable. Emissions trades must comply with all applicable requirements. (3-23-98)

c. Provide proposed replicable procedures and permit terms that ensure the emissions trades are quantifiable and enforceable. Emissions trades involving emissions units for which the emissions are not quantifiable or for which there are no replicable procedures to enforce the emissions trade shall not be approved. (3-23-98)

12. Additional Information. Provide all additional information that the Department determines is necessary for the Department to efficiently and effectively perform its functions. Such functions include, but are not limited to, determining the applicability of requirements for all regulated air pollutants, determining compliance with applicable requirements, developing or defining Tier I operating permit terms and conditions, defining all approved alternative operating scenarios, evaluating excess emissions procedures or making all necessary evaluations and determinations. (4-5-00)

The Milner Butte Landfill has acknowledges the required standard application forms and information required to be submitted for a Tier I permit application.

315. DUTY TO SUPPLEMENT OR CORRECT APPLICATION.

01. Failure to Submit. Any applicant who fails to submit any relevant facts or who has submitted incorrect information in a permit application shall, upon becoming aware of such failure or incorrect submittal, promptly submit such supplementary facts or corrected information. (5-1-94)

02. Necessary Additional Information. If, while processing an application that has been determined or deemed to be complete, the Department determines that additional information is necessary to evaluate or take final action on that application, the Department may request such information in writing and set a deadline for a response. The applicant shall submit the requested information on or before the deadline set by the Department. (5-1-94)

03. Additional Information After Completeness. The applicant shall promptly provide additional information as necessary to address any requirements that become applicable to the Tier I source after the date a complete application was filed but prior to release of a proposed action. (5-1-94)

The Milner Butte Landfill acknowledges the duty to supplement or correct an application if information was failed to be submitted.

316. EFFECT OF INACCURATE INFORMATION IN APPLICATIONS OR FAILURE TO SUBMIT RELEVANT INFORMATION.

Notwithstanding the shield provisions of Section 325, the owner or operator shall be subject to enforcement action for operation of the Tier I source without a Tier I operating permit if the owner or operator submitted an incomplete or inaccurate application or the Tier I source is later determined not to qualify for coverage under the conditions and terms of the Tier I operating permit. (4-5-00)

The Milner Butte Landfill acknowledges the effect of inaccurate information in applications or failure to submit relevant information.

317. INSIGNIFICANT ACTIVITIES.

01. Applicability Criteria. This Section contains the criteria for identifying insignificant activities for the purposes of the Tier I operating permit program. Notwithstanding any other provision of this rule, no emission unit

or activity subject to an applicable requirement shall qualify as an insignificant emission unit or activity. Applicants may not exclude from Tier I operating permit applications information that is needed to determine whether the facility is major or whether the facility is in compliance with applicable requirements. (3-23-98)

a. Presumptively insignificant emission units. (3-23-98)

i. Except as provided above, the activities listed in this section may be omitted from the permit application. (3-23-98)

(1) Blacksmith forges. (3-23-98)

(2) Mobile transport tanks on vehicles except for those containing asphalt and not including loading and unloading operations. (3-23-98)

(3) Natural gas pressure regulator vents, excluding venting at oil and gas production facilities. (3-23-98)

(4) Storage tanks, reservoirs and pumping and handling equipment of any size, limited to soaps, lubricants, lubricating oil, treater oil, hydraulic fluid, vegetable oil, grease, animal fat, aqueous salt solutions or other materials and processes using appropriate lids and covers where there is no generation of objectionable odor or airborne particulate matter. (3-23-98)

(5) Pressurized storage of oxygen, nitrogen, carbon dioxide, air, or inert gases. (3-3-95)L

(6) Storage of solid material, dust-free handling. (3-3-95)L

(7) Boiler water treatment operations, not including cooling towers. (3-23-98)

(8) Vents from continuous emission monitors and other analyzers. (3-3-95)L

(9) Vents from rooms, buildings and enclosures that contain permitted emissions units or activities from which local ventilation, controls, and separate exhaust are provided. (3-3-95)L

(10) Internal combustion engines for propelling or powering a vehicle. (3-3-95)L

(11) Recreational fireplaces including the use of barbecues, campfires and ceremonial fires. (3-3-95)L

(12) Brazing, soldering, and welding equipment and cutting torches for use in cutting metal wherein components of the metal do not generate hazardous air pollutants or hazardous air pollutant precursors. (3-23-98)

(13) Atmospheric generators used in connection with metal heat treating processes using non-hazardous air pollutant metals as the primary raw material. (3-23-98)

(14) Non-hazardous air pollutant metal finishing or cleaning using tumblers. (3-23-98)

(15) Drop hammers or hydraulic presses for forging or metalworking. (3-3-95)L

(16) Electrolytic deposition, used to deposit brass, bronze, copper, iron, tin, zinc, precious and other metals not listed as the parents of hazardous air pollutants. (3-23-98)

(17) Equipment used for surface coating, painting, dipping or spraying operations, except those that will emit volatile organic compound or hazardous air pollutant. (3-23-98)

(18) Process water filtration systems. (3-23-98)

(19) Portable electrical generators that can be moved by hand from one (1) location to another. Moved by hand means that it can be moved without the assistance of any motorized or non-motorized vehicle, conveyance, or device. (3-23-98)

(20) Plastic and resin curing equipment, excluding FRP and provided these activities are not related to the source's primary business activity. (3-23-98)

(21) Extrusion equipment, metals, minerals, plastics, grain or wood used without solvents containing hazardous air pollutant. (3-23-98)

(22) Presses and vacuum forming, for curing rubber and plastic products or for laminating plastics without solvents containing hazardous air pollutants present. (3-23-98)

(23) Roller mills and calendars for use with rubber and plastics without solvents containing hazardous air pollutants. (3-23-98)

(24) Conveying and storage of plastic pellets. (3-3-95)L

(25) Plastic compression, injection, and transfer molding and extrusion, rotocasting, pultrusion, blowmolding, excluding acrylics, PVC, polystyrene and related copolymers and the use of plasticizer. Only oxygen, carbon dioxide, nitrogen, air or inert gas allowed as blowing agent. (3-3-95)L

(26) Plastic pipe welding. (3-3-95)L

(27) Wax application in either a molten state or aqueous suspension. (3-23-98)

(28) Plant maintenance and upkeep including routine housekeeping, janitorial activities, cleaning and preservation of equipment, preparation for and painting of structures or equipment, retarring roofs, applying insulation to buildings in accordance with applicable environmental and health and safety requirements and lawn, landscaping and groundskeeping activities. Provided these activities are not conducted as part of a manufacturing process, are not related to the sources's primary business activity, and not otherwise triggering a permit modification. (3-23-98)

(29) Agricultural activities on a facility's property that are not subject to registration or new source review by the permitting authority. (3-3-95)L

(30) Maintenance of paved streets and parking lots including paving, stripping, salting, sanding, cleaning and sweeping of streets and paved surfaces. Provided these activities are not related to the source's primary business activity, do not otherwise trigger a permit modification, and fugitive emissions are reasonably controlled as required in Section 808. (3-23-98)

(31) Ultraviolet curing processes. (3-3-95)L

(32) Hot melt adhesive application with no volatile organic compounds or hazardous air pollutants in the adhesive formula. (3-23-98)

(33) Laundering, dryers, extractors, tumblers for fabrics, using water solutions of bleach and/or detergents except for boilers. (3-23-98)

(34) Steam cleaning operations. (3-3-95)L

(35) Steam sterilizers. (3-3-95)L

(36) Food service activities including cafeterias, kitchen facilities and barbecues located at a source for providing food service on premises. (3-23-98)

(37) Portable drums and totes. (3-3-95)L

(38) Fluorescent light tube and aerosol can crushing in units designed to reduce emissions from these activities. (3-23-98)

(39) Flares used to indicate danger to the public. (3-3-95)L

(40) General vehicle maintenance including vehicle exhaust from repair facilities provided these activities are not related to the source's primary business activity and do not have applicable requirements under title VI of the Clean Air Act. (3-23-98)

(41) Comfort air conditioning or air cooling systems, not used to remove air contaminants from specific equipment. (3-3-95)L

(42) Natural draft hoods, natural draft stacks, or natural draft ventilators for sanitary and storm drains, safety valves, and storage tanks subject to size and service limitations expressed elsewhere in this section. (3-3-95)L

(43) Natural and forced air vents for bathroom/toilet facilities. (3-3-95)L

(44) Office activities. (3-3-95)L

(45) Equipment used for quality control/assurance or inspection purposes, including sampling equipment used exclusively to withdraw materials for laboratory analyses and testing. (3-23-98)

(46) Fire suppression systems and similar safety equipment and equipment used to train firefighters including fire drill pits. (3-23-98)

(47) Materials and equipment used by, and activity related to operation of infirmary; infirmary is not the source's business activity except equipment affected by the radionuclide NESHAP. (3-23-98)

(48) Satellite Accumulation Areas (SAAs) and Temporary Accumulation Areas (TAAs) managed in compliance with RCRA. (3-23-98)

(49) Equipment for carving, cutting, routing, turning, drilling, machining, sawing, surface grinding, sanding, planing, buffing, shot blasting, sintering, or polishing: Ceramics, glass, leather, metals, plastics, rubber, concrete, paper stock, or wood provided that these activities are not conducted as part of a manufacturing process. (3-23-98)

(50) Oxygen, nitrogen, or rare gas extraction and liquefaction equipment subject to other exemption limitation, e.g., internal and external combustion equipment. (3-3-95)L

(51) Slaughterhouses, such as rendering cookers, boilers, heating plants, incinerators, and electrical power generating equipment. (3-23-98)

(52) Ozonation equipment. (3-3-95)L

(53) Temporary construction activities at a facility provided that the installation or modification of emissions units must comply with all applicable federal, state, and local rules and regulations. (3-23-98)

(54) Batch loading and unloading of solid phase catalysts. (3-3-95)L

(55) Pulse capacitors. (3-3-95)L

(56) Gas cabinets using only gases that are not regulated air pollutants. (3-3-95)L

(57) CO2 lasers, used only on metals and other materials which do not emit hazardous air pollutants in the process. (3-23-98)

(58) Structural changes not having air contaminant emissions. (3-3-95)L

(59) Equipment used to mix, package, store and handle soaps, lubricants, vegetable oil, grease, animal fat, and non-volatile aqueous salt solutions, provided appropriate lids and covers are utilized. (3-23-98)

(60) Photographic process equipment by which an image is reproduced upon material sensitized to radiant energy, e.g., blueprint activity, photocopiers, mimeograph, telefax, photographic developing, and microfiche provided these activities are not related to the source's primary business activity. (3-23-98)

(61) Pharmaceutical and cosmetics packaging equipment. (3-3-95)L

(62) Paper trimmers/binders provided these activities are not related to the source's primary business activity. (3-23-98)

(63) Bench-scale laboratory equipment and laboratory equipment used exclusively for physical or chemical analysis, including associated vacuum producing devices but excluding research and development facilities. (3-23-98)

(64) Repair and maintenance shop activities not related to the source's primary business activity. (3-23-98)

(65) Handling equipment and associated activities for glass and aluminum which is destined for recycling, provided these activities are not related to the source's primary business activity. (3-23-98)

(66) Hydraulic and hydrostatic testing equipment. (3-3-95)L

(67) Batteries and battery charging stations, except at battery manufacturing plants. (3-23-98)

(68) Porcelain and vitreous enameling equipment. (3-3-95)L

(69) Solid waste containers. (3-3-95)L

(70) Salt baths using nonvolatile salts that do not result in emissions of any regulated air pollutants. (3-23-98)

(71) Shock chambers. (3-3-95)L

(72) Wire strippers. (3-3-95)L

(73) Humidity chambers. (3-3-95)L

(74) Solar simulators. (3-3-95)L

(75) Environmental chambers not using hazardous air pollutant gases. (3-23-98)

(76) Totally enclosed conveyors not including transfer points. (3-23-98)

(77) Steam vents and safety relief valves. (3-3-95)L

(78) Air compressors, pneumatically operated equipment, systems, and hand tools. (3-3-95)L

(79) Steam leaks. (3-3-95)L

(80) Boiler blow-down tank. (3-3-95)L

(81) Salt cake mix tanks at pulp mills. (3-23-98)

(82) Digester chip feeders at pulp mills. (3-23-98)

(83) Weak liquor and filter tanks at pulp mills. (3-23-98)

(84) Process water and white water storage tanks at pulp mills. (3-23-98)

(85) Demineralizer water tanks, demineralization, demineralizer vents, and oxygen scavenging (deaeration) of water. (3-23-98)

(86) Clean condensate tanks. (3-3-95)L

(87) Alum tanks. (3-3-95)L

(88) Broke beaters, repulpers, pulp and repulping tanks, stock chests and pulp handling. (3-3-95)L

(89) Lime and mud filtrate tanks. (3-3-95)L

(90) Hydrogen peroxide tanks. (3-3-95)L

(91) Lime mud washer. (3-3-95)L

(92) Lime mud filter. (3-3-95)L

(93) Hydro and liquor clarifiers or filters and storage tanks and associated pumping, piping, and handling. (3-23-98)

(94) Lime grits washers, filters, and handing. (3-3-95)L

(95) Lime silos and feed bins. (3-3-95)L

(96) Paper forming. (3-3-95)L

(97) Starch cooking. (3-3-95)L

(98) Pulp stock cleaning and screening. (3-23-98)

(99) Paper winders or other paper converting equipment. (3-23-98)

(100) Sludge dewatering and wet sludge handling. (3-23-98)

(101) Screw press vents. (3-3-95)L

(102) Pond dredging. (3-3-95)L

(103) Polymer tanks and storage devices and associated pumping and handling equipment, used for solids dewatering and flocculation. (3-3-95)L

(104) Non-PCB oil filled circuit breakers, oil filled transformers and other equipment that is analogous to, but not considered to be, a tank. (3-3-95)L

(105) Lab-scale electric or steam-heated drying ovens and autoclaves. (3-23-98)

(106) Sewer manholes, junction boxes, sumps and lift stations associated with waste water treatment systems. (3-3-95)L

(107) Water cooling towers processing exclusively noncontact cooling water. (3-3-95)L

(108) Paper coating and sizing. (3-3-95)L

(109) Process waste water and ponds. (3-3-95)L

(110) Outdoor firearms practice ranges. (3-3-95)L

b. Insignificant activities on the basis of size or production rate. (3-23-98)

i. This section contains lists of units or activities that are insignificant on the basis of size or production rate. Units and activities listed in this section must be listed in the permit application. The following units and activities are determined to be insignificant based on their size or production rate: (3-23-98)

(1) Operation, loading and unloading of storage tanks and storage vessels, with lids or other appropriate closure and less than two hundred sixty (260) gallon capacity thirty five cubic feet (35cft), heated only to the minimum extend to avoid solidification if necessary. (3-3-95)L

(2) Operation, loading and unloading of storage tanks, not greater than one thousand one hundred (1,100) gallon capacity, with lids or other appropriate closure, not for use with hazardous air pollutants, maximum (max.) vp five-hundred fifty (550) mm Hg. (3-23-98)

(3) Operation, loading and unloading of volatile organic compound storage tanks, ten thousand (10,000) gallons capacity or less, with lids or other appropriate closure, vp not greater than eighty (80) mm Hg at twenty-one (21) degrees C. Operation, loading and unloading of gasoline storage tanks, ten thousand (10,000) gallons capacity or less, with lids or other appropriate closure. (3-23-98)

(4) Operation, loading and unloading storage of butane, propane, or liquified petroleum gas (LPG), storage tanks, vessel capacity under forty thousand (40,000) gallons. (3-3-95)L

(5) Combustion source, less than five million (5,000,000) Btu/hr, exclusively using natural gas, butane, propane, and/or LPG. (3-3-95)L

(6) Combustion source, less than five hundred thousand (500,000) Btu/hr, using any commercial fuel containing less than four-tenths percent (.4%) by weight sulfur for coal or less than one percent (1%) by weight sulfur for other fuels. (3-3-95)L

(7) Combustion source, of less than one million (1,000,000) Btu/hr, if using kerosene, No. 1 or No. 2 fuel oil. (3-3-95)L

(8) Combustion source, not greater than five hundred thousand (500,000) Btu/hr, if burning waste wood, wood waste or waste paper. (3-3-95)L

(9) Welding using not more than one (1) ton per day of welding rod. (3-3-95)L

(10) Foundry sand molds, unheated and using binders with less than twenty-five hundredths percent (.25%) free phenol by sand weight. (3-3-95)L

(11) “Parylene” coaters using less than five hundred (500) gallons of coating per year. (3-3-95)L

(12) Printing and silkscreening, using less than two (2) gallon/day of any combination of the following: Inks, coatings, adhesives, fountain solutions, thinners, retarders, or nonaqueous cleaning solutions. (3-3-95)L

(13) Water cooling towers and ponds, not using chromium-based corrosion inhibitors, not used with barometric jets or condensers, not greater than ten thousand (10,000) gpm, not in direct contact with gaseous or liquid process streams containing regulated air pollutants. (3-3-95)L

(14) Combustion turbines, of less than five hundred (500) HP. (3-3-95)L

(15) Batch solvent distillation, not greater than fifty-five (55) gallons batch capacity. (3-3-95)L

(16) Municipal and industrial water chlorination facilities of not greater than twenty million (20,000,000) gallons per day capacity. The exemption does not apply to waste water treatment. (3-3-95)L

(17) Surface coating, using less than two (2) gallons per day. (3-3-95)L

(18) Space heaters and hot water heaters using natural gas, propane or kerosene and generating less than five million (5,000,000) Btu/hr. (3-3-95)L

(19) Tanks, vessels, and pumping equipment, with lids or other appropriate closure for storage or dispensing of aqueous solutions of inorganic salts, bases and acids excluding: (3-3-95)L

(a) Ninety-nine percent (99%) or greater H2SO4 or H3PO4. (3-3-95)L

(b) Seventy percent (70%) or greater HNO3. (3-3-95)L

(c) Thirty percent (30%) or greater HC1. (3-3-95)L

(d) More than one (1) liquid phase where the top phase is more than one percent (1%) volatile organic compounds. (3-23-98)

(20) Equipment used exclusively to pump, load, unload, or store high boiling point organic material, material with initial boiling point (IBP) not less than one hundred fifty (150) degrees C or vapor pressure (vp) not more than five (5) mm Hg at twenty-one (21) degrees C with lids or other appropriate closure. (3-3-95)L

(21) Smokehouses under twenty (20) square feet. (3-3-95)L

(22) Milling and grinding activities, using paste-form compounds with less than one percent (1%) volatile organic compounds. (3-23-98)

(23) Rolling, forging, drawing, stamping, shearing, or spinning hot or cold metals. (3-3-95)L

(24) Dip-coating operations, using materials with less than one percent (1%) volatile organic compounds. (3-23-98)

(25) Surface coating, aqueous solution or suspension containing less than one percent (1%) volatile organic compounds. (3-23-98)

(26) Cleaning and stripping activities and equipment, using solutions having less than one percent (1%) volatile organic compounds by weight. On metallic substrates, acid solutions are not considered for listing as insignificant. (3-23-98)

(27) Storage and handling of water based lubricants for metal working where the organic content of the lubricant is less than ten percent (10%). (3-3-95)L

(28) Municipal and industrial waste water chlorination facilities of not greater than one million (1,000,000) gallons per day capacity. (3-3-95)L

(29) Domestic sewage treatment ponds with average flowrates less than four hundred (400) gpm or treating waste from less than three thousand (3000) people from non-residential sources. (3-23-98)

(30) An emission unit or activity with potential emissions less than or equal to the significant emission rate as defined in Section 006 and actual emissions less than or equal to ten percent (10%) of the levels contained in Section 006 of the definition of significant and no more than one (1) ton per year of any hazardous air pollutant. (5-3-03)

The Milner Butte Landfill acknowledges the above insignificant activities and will not include them in emission calculations.

321. TIER I OPERATING PERMIT CONTENT.

The purpose of Sections 321 through 336 is to mandate and authorize the contents of Tier I operating permits. (5-1-94)

The Milner Butte Landfill acknowledges the purpose of Section 321.

322. STANDARD CONTENTS OF TIER I OPERATING PERMITS.

All Tier I operating permits shall contain and the Department shall have the authority to impose, implement and enforce, the following elements for all permitted operating scenarios and emissions trading scenarios. Fugitive emissions shall be included in the Tier I operating permit in the same manner as stack emissions. (3-23-98)

01. Emission Limitations and Standards. All Tier I operating permits shall contain emission limitations and standards, including, but not limited to, those operational requirements and limitations that assure compliance with the applicable requirements identified in the application, or determined by the Department to be applicable to the source. (3-19-99)

02. Authority for and Form of Terms and Conditions. All Tier I operating permits shall specify and reference the origin of and authority for each term or condition, and identify any difference in form as compared to the applicable requirement upon which the term or condition is based. (5-1-94)

03. Terms or Conditions for Applicable Requirements. All Tier I operating permits shall contain at least one (1) permit term or condition for every applicable requirement specifically identified in the application or determined by the Department to be applicable to the source. (3-23-98)

04. Alternative Operating Scenarios. All Tier I operating permits shall contain terms and conditions to ensure compliance with all applicable requirements for each alternative operating scenario that was requested by the applicant and approved by the Department, including, but not limited to, a requirement that the owner or operator of the source, contemporaneously with making a change from one (1) operating scenario to another, record the change in an operating scenario log located and retained at the permitted facility. (5-1-94)

05. Trading Scenarios. (5-1-94)

a. All Tier I operating permits shall contain terms and conditions for each trading scenario that was requested by the applicant and approved by the Department including, but not limited to, terms and conditions which ensure that any emission trade is quantifiable, accountable, enforceable and based on replicable procedures.(3-23-98)

b. The Tier I operating permit shall state that no permit revision shall be required under approved economic incentives, marketable permits, emissions trading, and other similar programs or processes for changes that are provided for in the permit. (4-5-00)

c. The Tier I operating permit shall, at a minimum, include a requirement that the owner or operator of the source, contemporaneously with making a change from one (1) trading scenario to another, record the change in a trading scenario log located and retained at the permitted facility and provide notice to the Department in accordance with Section 383. (3-23-98)

06. Monitoring. All Tier I operating permits shall contain the following with respect to monitoring: (5-1-94)

a. Sufficient monitoring to ensure compliance with all of the terms and conditions of the Tier I operating permit; (5-1-94)

b. All emissions monitoring and analysis procedures or test methods required under the applicable requirements; (5-1-94)

c. If the applicable requirement does not require specific periodic testing or monitoring, terms and conditions requiring periodic monitoring, recordkeeping, or both, that is sufficient to yield reliable data for the relevant time periods that are representative of the emissions unit's compliance with the Tier I operating permit, as reported pursuant to Subsection 322.08, and ensuring the use of terms, test methods, units, averaging periods, and other statistical conventions consistent with the applicable requirement; and (5-1-94)

d. Requirements that the Department determines are necessary, concerning the use, maintenance and installation of monitoring equipment or methods. (5-1-94)

07. Recordkeeping. All Tier I operating permits shall incorporate by reference all applicable requirements regarding recordkeeping and require all of the following: (5-1-94)

a. Sufficient recordkeeping to assure compliance with all of the terms and conditions of the Tier I operating permit. (5-1-94)

b. Recording of monitoring information including but not limited to the following: (5-1-94)

i. The date, place (as defined in the Tier I operating permit) and time of sampling or measurements; (5-1-94)

ii. The date(s) analyses were performed; (5-1-94)

iii. The company or entity that performed the analyses; (5-1-94)

iv. The analytical techniques or methods used; (5-1-94)

v. The results of such analyses; and (5-1-94)

vi. The operating conditions existing at the time of sampling or measurement. (5-1-94)

c. Retention of all monitoring records and support information for a period of at least five (5) years from the date of the monitoring sample, measurement, report or application. Supporting information includes but is not limited to all calibration and maintenance records and all original strip-chart recordings for continuous monitoring instrumentation and copies of all reports required by the Tier I operating permit. (5-1-94)

08. Reporting. All Tier I operating permits shall incorporate by reference all applicable requirements regarding reporting and require all of the following: (5-1-94)

a. Sufficient reporting to assure compliance with all of the terms and conditions of the Tier I operating permit. (5-1-94)

b. Prompt reporting of deviations from permit requirements including, but not limited to, those attributable to excess emissions. If the deviation is an excess emission, the report shall be submitted in accordance with the requirements of Sections 130 through 136. For all other deviations, the report shall be submitted in accordance with Subsection 322.08.c. unless the permit specifies another time frame. The reports shall describe the probable cause of such deviations and any corrective actions or preventative measures taken. (3-23-98)

c. Submittal of reports for any required monitoring at least every six (6) months. All instances of deviations from Tier I operating permit requirements, which include monitoring, recordkeeping, and reporting, must be clearly identified in such reports. All required reports must be certified in accordance with Section 123. (4-5-00)

09. Testing. All Tier I operating permits shall contain terms and conditions requiring sufficient testing to assure compliance with all of the terms and conditions of the Tier I operating permit. (5-1-94)

10. Compliance Schedule and Progress Reports. All Tier I operating permits shall contain terms and conditions regarding the compliance plan submitted in the application in accordance with Subsection 314.10 including all of the following: (4-5-00)

a. For each applicable requirement for which the source is not in compliance at the time of the permit issuance, terms and conditions consistent with the compliance schedule submitted by the applicant including all of the following: (4-5-00)

i. A schedule of remedial measures leading to compliance including an enforceable sequence of actions and specific dates for achieving the milestones and achieving compliance. (4-5-00)

ii. A requirement that the permittee submit periodic progress reports to the Department no less frequently than every six (6) months or at a more frequent period if one is specified in the underlying applicable requirement or by the Department. (5-1-94)

iii. A requirement that any progress report shall include a statement of when the milestones and compliance were or will be achieved, an explanation of why any dates in the compliance schedule submitted by the applicant or in the terms or conditions of the Tier I operating permit were not or will not be met and a detailed description of any preventative or corrective measures undertaken by the permittee. (5-1-94)

iv. All terms and conditions of any applicable consent order, judicial order, judicial consent decree, administrative order, settlement agreement or judgment. (5-1-94)

v. A statement that the terms and conditions regarding the compliance schedule are supplemental to, and do not sanction noncompliance with, the underlying applicable requirement. (5-1-94)

b. For each applicable requirement that will become effective during the term of the Tier I operating permit and that requires a detailed compliance schedule, the permit shall include such compliance schedule. (4-5-00)

c. For each applicable requirement that will become effective during the term of the Tier I operating permit that does not require a detailed compliance schedule, the permit shall include a statement that the permittee shall meet, on a timely basis, all such applicable requirements. (4-5-00)

11. Periodic Compliance Certifications. Each Tier I operating permit shall require submittal of compliance certifications during the term of the permit for each emissions unit to the Department and the EPA as follows: (5-1-94)

a. Compliance certifications for all emissions units shall be submitted no less frequently than annually, or more frequently if specified by the underlying applicable requirement or by the Department. (5-1-94)

b. The compliance certification for each emissions unit shall address all of the terms and conditions contained in the Tier I operating permit that are applicable to such emissions unit including emissions limitations, standards and work practices. (5-1-94)

c. The compliance certification shall be in an itemized format providing the following information: (5-1-94)

i. The identification of each term or condition of the Tier I operating permit that is the basis of the certification; (4-5-00)

ii. The identification of the method(s) or other means used by the owner or operator for determining the compliance status with each term and condition during the certification period. Such methods and other means shall include, at a minimum, the methods and means required under Subsections 322.06, 322.07, and 322.08;(4-6-05)

iii. The status of compliance with the terms and conditions of the Tier I operating permit for the period covered by the certification, including whether compliance during the period was continuous or intermittent. The certification shall be based on the method or means designated in Subsection 322.11.c.ii. above. The certification shall identify each deviation and take it into account in the compliance certification. The certification shall also identify as possible exceptions to compliance any periods during which compliance is required and in which an excursion or exceedance as defined under 40 CFR Part 64 occurred; and (4-6-05)

iv. Such information as the Department may require to determine the compliance status of the emissions unit. (4-5-00)

d. All original compliance certifications shall be submitted to the Department and a copy of all compliance certifications shall be submitted to the EPA; (5-1-94)

12. Permit Conditions Regarding Acid Rain Allowances. (5-1-94)

a. A permit condition prohibiting emissions exceeding any allowances that the source lawfully holds. (5-1-94)

b. No limit shall be placed on the number of allowances held by the source and no permit revisions shall be required for increases in emissions that are authorized by allowances acquired pursuant to the acid rain program, provided that such increases do not require a permit revision under any other applicable requirement. (3-23-98)

c. The source may not, however, use allowances as a defense to noncompliance with any other applicable requirement. (5-1-94)

d. Any such allowance shall be accounted for according to the procedures established in 40 CFR Part 72 and 40 CFR Part 73. (5-1-94)

13. Permit Duration. Each Tier I operating permit shall state that it is effective for a fixed term of five (5) years; except that during the first four (4) years after EPA approval of the Tier I operating permit program, the permit may be issued with an initial term of three (3) years to five (5) years unless the Tier I source is also a Phase II source. (5-1-94)

14. Other Specific Requirements. Any terms or conditions determined by the Department to be necessary for approval of the Tier I operating permit. (5-1-94)

15. General Requirements. Each Tier I operating permit shall contain provisions stating the following: (5-1-94)

a. The permittee shall comply with all conditions of this permit. Any permit noncompliance constitutes a violation and is grounds for enforcement action; for permit revocation, termination, revocation and reissuance, or revision; or for denial of a permit renewal application. (5-1-94)

b. It shall not be a defense in an enforcement action that it would have been necessary to halt or reduce any activity in order to maintain compliance with the terms and conditions of this permit. (5-1-94)

c. This permit may be revised, revoked, reopened and reissued, or terminated for cause. (5-1-94)

d. The filing of a request by the permittee for a permit revision, revocation and reissuance, or termination, or of a notification of planned changes or anticipated noncompliance does not stay any permit condition. (5-1-94)

e. This permit does not convey any property rights of any sort, or any exclusive privilege. (5-1-94)

f. The permittee shall furnish all information requested by the Department, within a reasonable time, that the Department may request in writing to determine whether cause exists for modifying, revoking and reissuing or terminating the permit or to determine compliance with the permit. (4-5-00)

g. Upon request, the permittee shall furnish to the Department copies of records required to be kept by this permit. (5-1-94)

h. The provisions of this permit are severable, and if any provision of this permit to any circumstance is held invalid, the application of such provision to other circumstances, and the remainder of this permit shall not be affected thereby. (5-1-94)

i. The permittee shall comply with Sections 380 through 386 as applicable. (3-19-99)

j. Unless specifically identified as a “State Only” provision, all terms and conditions in the this permit, including any terms and conditions designed to limit a source's potential to emit, are enforceable: (5-1-94)

i. By the Department in accordance with State law; and (5-1-94)

ii. By the United States or any other person in accordance with Federal law. (5-1-94)

k. Provisions specifically identified as a “State Only” provision are enforceable only in accordance with State law. “State Only” provisions are those that are not required under the Federal Clean Air Act or under any of its applicable requirements or those provisions adopted by the State prior to federal approval. (3-23-98)

l. Upon presentation of credentials, the permittee shall allow the Department or an authorized representative of the Department to do the following: (5-1-94)

i. Enter upon the permittee's premises where a Tier I source is located or emissions-related activity is conducted, or where records are kept under the conditions of this permit; (5-1-94)

ii. Have access to and copy, at reasonable times, any records that are kept under the conditions of this permit; (5-1-94)

iii. Inspect at reasonable times any facilities, equipment (including monitoring and air pollution control equipment), practices, or operations regulated or required under this permit; and (5-1-94)

iv. Sample or monitor at reasonable times substances or parameters for the purpose of determining or ensuring compliance with this permit or applicable requirements. (5-1-94)

m. Nothing in this permit shall alter or affect the following: (5-1-94)

i. Any administrative authority or judicial remedy available to prevent or terminate emergencies or imminent and substantial dangers; (5-1-94)

ii. The liability of an owner or operator of a source for any violation of applicable requirements prior to or at the time of permit issuance; (5-1-94)

iii. The applicable requirements of the acid rain program, consistent with 42 U.S.C. Section 7651g(a); (5-1-94)

iv. The owner or operator's duty to provide information. (5-1-94)

n. The owner or operator of a Tier I source shall pay registration fees to the Department in accordance with Sections 387 through 399, which are hereby incorporated by reference. (7-1-02)

o. All documents submitted to the Department shall be certified in accordance with Section 123 and comply with Section 124. (5-1-94)

p. If a timely and complete application for a Tier I operating permit renewal is submitted, but the Department fails to issue or deny the renewal permit before the end of the term of the previous permit, then all the terms and conditions of the previous permit including any permit shield that may have been granted pursuant to Section 325 shall remain in effect until the renewal permit has been issued or denied. (5-1-94)

q. The permittee shall promptly report deviations from permit requirements including, but not limited to, those attributable to excess emissions. If the deviation is an excess emission, the report shall be submitted in accordance with the requirements of Sections 130 through 136. For all other deviations, the report shall be submitted in accordance with Subsection 322.08.c. unless the permit specifies another time frame. The reports shall describe the probable cause of such deviations and any corrective actions or preventative measures taken. (3-23-98)

The Milner Butte Landfill acknowledges the above Tier I operating permit standard contents.

325. ADDITIONAL CONTENTS OF TIER I OPERATING PERMITS -- PERMIT SHIELD.
Each Tier I operating permit shall include provisions stating: (5-1-94)

01. General Permit Shield. Compliance with the terms and conditions of the Tier I operating permit, including those applicable to all alternative operating scenarios and trading scenarios, shall be deemed compliance with all of the following: (5-1-94)

a. Applicable requirements as of the date of permit issuance that are specifically identified in the Tier I operating permit and have a corresponding term or condition in the Tier I operating permit. (5-1-94)

b. Non-applicable requirements. For a requirement to be a non-applicable requirement, all of the following criteria must be met: (5-1-94)

i. The permittee must have provided the information required by Subsection 314.08.b. in the application. (5-1-94)

ii. The requirement must be specifically identified in the Tier I operating permit as a non-applicable requirement. (5-1-94)

iii. The requirement must have been determined by the Department, in writing and in acting on the permit application or revision, to not be applicable to the Tier I source. (5-1-94)

iv. Tier I operating permit must include the Department's determination or a concise summary thereof. (5-1-94)

02. Limitation on Permit Shield. Permit revisions and other actions authorized by Sections 300 through 386 may eliminate, modify or suspend the permit shield. (3-19-99)

The Milner Butte Landfill acknowledges the above permit shield contents of a Tier I operating permit.

332. EMERGENCY AS AN AFFIRMATIVE DEFENSE REGARDING EXCESS EMISSIONS.

01. General. An emergency, as defined in Section 008, constitutes an affirmative defense to an action brought for noncompliance with such technology-based emission limitation if the conditions of Subsection 332.02 are met. (4-5-00)

02. Demonstration of Emergency. The affirmative defense of emergency shall be demonstrated through properly signed, contemporaneous operating logs, or other relevant evidence that: (5-1-94)

a. An emergency occurred and that the permittee can identify the cause(s) of the emergency; (5-1-94)

b. The permitted facility was at the time being properly operated; (5-1-94)

c. During the period of the emergency, the permittee took all reasonable steps, as determined by the Department, to minimize levels of emissions that exceeded the emission standards, or other requirements in the permit; and (5-1-94)

d. The permittee submitted written notice of the emergency to the Department within two (2) working days of the time when emission limitations were exceeded due to the emergency. This notice must contain a description of the emergency, any steps taken to mitigate emissions, and corrective actions taken. Compliance with this section satisfies the written reporting requirements under Section 135 and Subsection 322.15.q. (4-5-00)

03. Burden of Proof. In any enforcement proceeding, the permittee seeking to establish the occurrence of an emergency has the burden of proof. (5-1-94)

04. Applicability. Section 332 is in addition to any emergency or upset provision contained in any applicable requirement. (3-20-97)

The Milner Butte Landfill acknowledges the above emergency as an affirmative defense regarding excess emissions.

335. GENERAL TIER I OPERATING PERMITS AND AUTHORIZATIONS TO OPERATE.

01. Issuance of General Tier I Operating Permits. The Department may, after notice and opportunity for public participation provided in accordance with Section 364, issue a general Tier I operating permit covering numerous similar sources. (5-1-94)

02. Contents of General Tier I Operating Permits. Each general Tier I operating permit: (5-1-94)

a. Shall include all terms and conditions identified in Sections 322 and 325. (3-23-98)

b. Shall include specific criteria by which sources may qualify for coverage under the general Tier I operating permit; and (5-1-94)

c. May provide for applications which deviate from the requirements of Sections 311 through 315, provided that such applications meet all other requirements of 42 U.S.C. 7661 through 7661f and include all information necessary to determine qualification for, and to ensure compliance with, the general Tier I operating permit. (3-23-98)

03. Applications for Authorizations to Operate. The owner or operator of a Tier I source may apply for an authorization to operate under the terms and conditions of a general Tier I operating permit by: (5-1-94)

a. Stating in the application submitted pursuant to Sections 311 through 315 that the owner or operator has determined that the Tier I source qualifies for coverage under a specifically identified general Tier I operating permit and that the owner or operator requests that operations of the Tier I source be authorized under a specifically identified general Tier I operating permit; or (5-1-94)

b. Complying with the specific application requirements, if any, provided in the general Tier I operating permit. (5-1-94)

04. Procedures for Issuing Authorizations to Operate. Without repeating the public participation procedures required under Section 364, the Department shall issue an authorization to operate a Tier I source under a specifically identified general Tier I operating permit if the Department determines that the Tier I source qualifies for coverage. (3-23-98)

05. Review of Authorizations to Operate. The issuance of an authorization to operate shall be a final agency action for purposes of administrative and judicial review of the authorization. The general Tier I operating permit shall not be subject to administrative or judicial review upon the issuance of an authorization to operate. (5-1-94)

06. Phase II Sources. General Tier I operating permits shall not be authorized for Phase II sources under the acid rain program unless otherwise provided in 40 CFR Part 72. (5-1-94)

The Milner Butte Landfill is not applying for a general Tier I operating permit.

336. TIER I OPERATING PERMITS FOR TIER I PORTABLE SOURCES.

01. Issuance of Tier I Operating Permits for Portable Tier I Sources. (5-1-94)

a. The Department may issue a single Tier I operating permit authorizing emissions from similar operations of a portable Tier I source by the owner or operator at multiple temporary locations. (5-1-94)

b. The operation must be temporary and involve at least one (1) change of location for the portable Tier I source during the term of the Tier I operating permit. (5-1-94)

02. Phase II Sources. No Phase II source shall be permitted as a portable Tier I source. (5-1-94)

03. Contents of Tier I Operating Permits for Portable Tier I Sources. Tier I operating permits for portable Tier I sources shall include the following: (5-1-94)

a. Terms and conditions that will ensure compliance with all applicable requirements at all authorized locations; (5-1-94)

b. Requirements that the owner or operator notify the Department at least ten (10) days in advance of each change in location in accordance with Section 500; and (5-1-94)

c. All terms and conditions identified in Sections 322 and 325 through 332. (5-1-94)

The Milner Butte Landfill is not a portable source.

360. STANDARD PROCESSING OF TIER I OPERATING PERMIT APPLICATIONS.
The purposes of Sections 360 through 369 is to establish standard procedures and requirements for processing Tier I operating permits. (5-1-94)

The Milner Butte Landfill acknowledges the purpose of Section 360.

361. COMPLETENESS OF APPLICATIONS.

01. Criteria for Completeness. Except as otherwise provided by these rules, the application must comply with Section 314 including that the information must be in sufficient detail. (5-1-94)

02. Timelines for Determinations of Completeness. The Department shall send written notice to the applicant of whether the application is complete within sixty (60) days of receiving the application. If the Department fails to send the written notice to the applicant within sixty (60) days of receipt, the application shall be deemed complete. (3-23-98)

03. Effects of Completeness Determination. (5-1-94)

a. The submittal of a complete application activates the application shield provided by Subsection 361.02. (5-1-94)

b. The submittal of a complete Tier I operating permit application shall not affect the permit to construct requirements of Sections 200 through 225 or 42 U.S.C. Sections 7401 through 7515. (5-1-94)

c. The timelines for final agency action provided in Subsections 367.02 and 367.03 begin on the date of the completeness determination. (5-1-94)

The Milner Butte Landfill acknowledges the above conditions for completeness determination.

362. TECHNICAL MEMORANDUMS FOR TIER I OPERATING PERMITS.

01. Memorandum for Draft Permit. As part of its review of the Tier I operating permit application, the Department shall prepare a technical memorandum that sets forth the legal and factual basis for the draft Tier I operating permit terms and conditions (including references to the applicable statutory or regulatory provisions) or the draft denial. (5-1-94)

02. Revised Memorandum for Proposed Permit. If the Department revises its analysis, its conclusions or the terms or conditions of the Tier I operating permit in response to public comment, the Department may revise the technical memorandum for the proposed permit or the proposed denial. (5-1-94)

03. Release of Memorandum. The technical memorandum(s) shall be made available to the public in accordance with Section 364 and sent to the EPA with the proposed Tier I operating permit or proposed denial. (5-1-94)

The Milner Butte Landfill acknowledges the above Tier I operating permit technical memorandums conditions.

363. PREPARATION OF DRAFT PERMIT OR DRAFT DENIAL.
Except as otherwise provided in these rules, the Department shall prepare a draft permit or draft denial as promptly as practicable or one hundred twenty (120) days before the deadline for final action, whichever is earlier. (5-1-94)

The Milner Butte Landfill acknowledges the above draft permit or draft denial timeline.

364. PUBLIC NOTICES, COMMENTS AND HEARINGS.

01. Generally. Except as otherwise provided in these rules, all Tier I operating permit proceedings shall provide for public notice and public comment, including offering an opportunity for a hearing, on a draft permit or on a draft denial. (5-1-94)

02. Public Comment Package. A public comment package including the draft permit or draft denial, the technical memorandum and the application shall be prepared and distributed to appropriate public locations, the applicant and affected States. (5-1-94)

03. Giving Notice. Notice shall be given: by publication in a newspaper of general circulation in the area where the Tier I source is located or in a State publication designed to give general public notice; by mailing the notice to persons on a mailing list developed by the Department, including those who request in writing to be on the

list; by mailing the notice to all affected States; and by other means if necessary to ensure adequate notice to the affected public. (5-1-94)

04. Content of the Notice. The notice shall identify the affected facility; provide the name and address of the permittee; provide the name and address of the Department processing the application; identify the draft permit action; identify the emissions change if the permit action is a permit revision or reopening; provide the locations where the public may locate a copy of the public comment package; provide the name, address, and telephone number of a person from whom interested persons may obtain additional information that is relevant to the permit decision by filing a written public documents request and paying any costs; provide a brief description of the comment procedures, including the deadline for comments and the name and address of the person to whom written comments must be delivered; and state the time and place of any hearing that has been scheduled or provide information regarding how a person may request a hearing. (5-1-94)

05. Public Comment Procedures. (5-1-94)

a. The Department shall provide at least thirty (30) days for public comment. (5-1-94)

b. The Department may designate the person to receive written comments. (5-1-94)

c. The Department shall give notice of any public hearing at least thirty (30) days in advance of the hearing. (5-1-94)

d. The public hearing, if any, shall be an informal meeting, conducted by a hearing officer designated by the Department and transcribed. Written comments or supporting documents may be submitted during the hearing. (5-1-94)

e. The public comments and additional information received during the comment period shall be available to the public upon the filing of a written public documents request and the payment of any costs. (5-1-94)

The Milner Butte Landfill acknowledges the above conditions related to public notices, comments, and hearings.

365. PREPARATION OF PROPOSED PERMIT OR PROPOSED DENIAL.

01. Timeline. Except as otherwise provided by these rules, the Department shall prepare a proposed permit or proposed denial within thirty (30) days after the close of the public comment period, unless the Department determines that additional time is required to evaluate comments and information received. (5-1-94)

02. Availability. The proposed permit or proposed denial shall be available to the public upon the filing a written public documents request and the payment of any costs. (5-1-94)

03. Notice to Affected States. If the Department refuses to accept all recommendations that an affected State submitted during the public comment period, the Department shall send a copy of the notice sent to EPA in accordance with Subsection 366.01.d. to the affected State that submitted the recommendation. (5-1-94)

The Milner Butte Landfill acknowledges the above conditions for preparation of proposed permit or proposed denial.

366. EPA REVIEW PROCEDURES.

01. Submittal of Proposal to EPA. Except as otherwise provided in these rules and unless EPA waives its opportunity to review a proposed permit, the Department will transmit the following to EPA: (5-1-94)

a. The proposed permit or proposed denial. (5-1-94)

b. The technical memorandum, as revised if appropriate. (5-1-94)

c. The application including all supplements and corrections submitted by the applicant, unless the applicant has submitted the information under a claim of confidentiality or unless the Department has entered an agreement with EPA to submit only a summary form and relevant portions of the permit application. (5-1-94)

d. Notice of any refusal by the Department to accept all recommendations for the proposal that any affected State submitted during the public comment period. The notice shall include the Department's reasons for not accepting any such recommendation. The Department is not required to accept recommendations that are not based on applicable requirements. (5-1-94)

02. Opportunity for EPA Objection. (5-1-94)

a. EPA may submit to the Department a written objection to the proposal within forty-five (45) days of receipt of the transmittal identified in Subsection 366.01. (5-1-94)

b. The written objection shall state the EPA's reasons for the objection and provide the terms and conditions that the Tier I operating permit must include to respond to the objection or state that the permit must be denied. (5-1-94)

c. EPA shall provide a copy of the written objection to the applicant. (5-1-94)

03. Response to EPA Objections. Within ninety (90) days of receiving a written objection from EPA, the Department shall prepare a revised proposal and submit it to EPA in accordance with Subsection 366.01. If EPA determines that the revised proposal is objectionable, the Department will review the permit action taken by EPA and take a comparable final permit action in accordance with Section 367. (5-1-94)

04. Public Petitions to EPA. (5-1-94)

a. If the EPA does not object in writing under Subsection 366.02, any person may petition the EPA within sixty (60) days after the expiration of the EPA's forty-five (45) day review period to make such objection. (5-1-94)

b. Any such petition shall be based only on objections to the draft permit or draft denial that were raised with specificity during the public comment period provided for in Section 364 unless the petitioner demonstrates that it was impracticable to raise such objections within such period, or unless the grounds for such objection arose after such period. (5-1-94)

c. If the EPA objects to the proposal in accordance with Subsection 366.02 as a result of a petition filed under Subsections 366.04.a. and 366.04.b., the Department shall: (5-1-94)

i. Not issue a permit action until EPA's objection has been resolved, except that a petition for review does not stay the effectiveness of a Tier I operating permit or its requirements pending EPA's review of the petition and Department review of the objection if the Tier I operating permit was issued by the Department after the end of the forty-five (45) day review period and prior to an EPA objection initiated by a petition. (5-1-94)

ii. Process the objection in accordance with Subsection 366.03. (5-1-94)

The Milner Butte Landfill acknowledges the above EPA review procedures.

367. ACTION ON APPLICATION.

01. Issuance Conditions. Except as otherwise provided by these rules, a Tier I operating permit, or any portion thereof, may be issued only if all of the following conditions have been met: (5-1-94)

a. The owner or operator has submitted a complete application in accordance with Section 361. (5-1-94)

b. The public has been provided notice and opportunities for comment and a hearing in accordance with Section 364. (5-1-94)

c. Affected States have been provided notice in accordance with Section 364 and Subsection 365.03. (5-1-94)

d. The terms and conditions of the Tier I operating permit comply with Sections 321 through 336 including providing for compliance with all applicable requirements. (5-1-94)

e. The EPA has been provided with the proposal and an opportunity to object and the Department has responded as required by Section 366. (5-1-94)

02. Deadlines for Final Actions During Initial Period. Except as otherwise provided in these rules, during the initial period beginning May 1, 1994 and ending three (3) years after EPA approval of the Tier I operating program, the Department will prioritize all of the applications predicted to be submitted during the initial period considering the groups established in accordance with Subsection 313.02, if any. The prioritization will result in the Department taking final action on one-third (1/3) of all such permit applications during each of the one (1) year periods following EPA approval of the program. (5-1-94)

03. Deadlines for Final Actions After Initial Period. Except as otherwise provided in these rules, during the period beginning three (3) years after EPA approval of the Tier I operating program, the Department shall take final action on complete applications within eighteen (18) months. (5-1-94)

04. Deadline for Tier I Operating Permits with Early Reductions. The Department shall take final action on any complete Tier I operating permit application containing an early reduction demonstration under 42 U.S.C. Section 7412 (i)(5) within nine (9) months of receipt of the complete application. (5-1-94)

05. Deadline for Tier I Operating Permits for Phase II Sources. The permitting of phase II sources shall occur in accordance with the deadlines in 42 U.S.C. Section 7651 through 7651o. (5-1-94)

06. Copy to EPA. The Department shall send a copy of the final Tier I operating permit to EPA. (5-1-94)

07. Original to Permittee. The Department shall send the original Tier I operating permit to the permittee. (5-1-94)

The Milner Butte Landfill acknowledges the above action of application requirements.

368. EXPIRATION OF PRECEDING PERMITS.

If a timely and complete Tier I permit application is received by the Department and is not acted upon in a timely manner as prescribed by these rules, the permit to construct, Tier I operating permit or Tier II operating permit, if any, that has been previously issued to the owner or operator of the Tier I source by the Department or EPA shall continue in full force until the Department has completed action of the permit application. No Tier I operating permit will be considered to have expired due solely to the Department's inaction on a timely Tier I operating permit application. (5-1-94)

The Milner Butte Landfill acknowledges the above expiration of preceding permits condition.

369. TIER I OPERATING PERMIT RENEWAL.

01. Renewal Procedures. Tier I operating permits being renewed are subject to the same procedural requirements, including those for public participation, including affected State review, and EPA review, that apply to initial Tier I operating permit issuance. (5-1-94)

02. Expiration and Renewal Application Shield. Tier I operating permit expiration terminates the source's right to operate unless a timely and complete renewal application has been submitted. (5-1-94)

The Milner Butte Landfill acknowledges the above Tier I operating permit renewal procedures.

380. CHANGES TO TIER I OPERATING PERMITS.

Applicability. Sections 380 through 399 establish procedures and requirements for permit revisions and changes requiring notice. These provisions do not alter the requirements for permits to construct set forth at Sections 200 through 228. (7-1-02)

02. Changes Requiring Permit Revisions. Sections 381 through 383 establish procedures and requirements for Tier I operating permit revisions. A permit revision is required for changes that are not addressed or prohibited by the Tier I operating permit if such changes are subject to any requirements under Title IV of the Clean Air Act or are modifications under any provision of Title I of the Clean Air Act. (4-5-00)

03. Changes Requiring Notice. Sections 384 and 385 establish procedures and requirements for providing notice by the permittee to the Department and EPA of certain emission trades and changes that contravene a permit term (Section 384), or certain changes that are not addressed or prohibited by the permit (Section 385). (3-19-99)

04. Reopening. Section 386 establishes procedures for reopening the permit for cause by the Department, EPA, or the permittee. (3-19-99)

05. Acid Rain. Changes regulated under Title IV of the Clean Air Act, 42 U.S.C. Sections 7651 through 7651o, shall be governed by regulations promulgated under Title IV of the Act. (3-19-99)

The Milner Butte Landfill acknowledges the above changes to Tier I operating permit conditions.

381. ADMINISTRATIVE PERMIT AMENDMENTS.01.

01. Criteria. An administrative permit amendment is a permit revision that: (3-19-99)

a. Corrects typographical errors; (3-19-99)

b. Identifies a change in the name, address, or phone number of any person identified in the Tier I operating permit, or provides a similar minor administrative change at the Tier I source; (3-19-99)

c. Requires more frequent monitoring or reporting by the permittee; (3-19-99)

d. Allows for a change in ownership or operational control of a Tier I source where the Department determines that no other change in the Tier I operating permit is necessary, provided that a written agreement containing a specific date for transfer of permit responsibility, coverage, and liability between the current and new permittee has been submitted to the Department; (3-19-99)

e. Incorporates into the Tier I operating permit the requirements from a permit to construct that was issued by the Department in accordance with Subsection 209.05.c.; or (4-5-00)

f. Is any other type of change that EPA and the Department have determined as part of the Part 70 program to be similar to those in Subsections 381.01.a. through 381.01.d. (3-19-99)

02. Administrative Permit Amendment Application Procedures. (3-19-99)

a. If initiated by the permittee, the permittee shall submit a request to the Department. The request shall: (3-19-99)

i. State at the beginning of the request that it is a "REQUEST FOR ADMINISTRATIVE PERMIT AMENDMENT." (3-19-99)

ii. Describe the proposed administrative permit amendment including any permit to construct to be incorporated; (3-19-99)

iii. State the date on which the proposed administrative amendment will occur at the facility; (3-19-99)

iv. Identify any Tier I operating permit term or condition that is no longer applicable as a result of the change; and (3-19-99)

v. Identify any applicable requirement that would apply to the Tier I source as a result of the change. (3-19-99)

b. If initiated by the Department, the Department shall notify the permittee that the Department is initiating an administrative permit amendment and provide a brief summary of the proposed administrative permit amendment including all of the information required by Subsection 381.02.a.i. through 381.02.a.v. (3-19-99)

c. The Department shall, within sixty (60) days of the receipt of a request for an administrative permit amendment, take final action on the request and may incorporate such changes without providing notice to the public or affected States provided that the Department designates any such administrative permit amendment as having been made pursuant to Section 381. The Department shall submit a copy of the revised permit, or an addendum, to the EPA and send the original to the permittee. (4-5-00)

03. Implementation Procedures. (3-19-99)

a. The permittee may implement the changes addressed in the request for an administrative permit amendment under Subsections 381.01.a. through 381.01.f. immediately upon submittal of the request. (3-19-99)

b. If the permittee obtains a permit to construct under Subsection 209.05.c., then so long as the change does not violate any terms or conditions of the existing Tier I operating permit, the permittee may operate the source described in the permit to construct immediately upon submittal of the request for an administrative permit amendment. (4-5-00)

04. Permit Shield. Upon final action by the Department, the permit shield described in Section 325 shall extend only to administrative permit amendments identified in Subsection 381.01.e. (3-19-99)

The Milner Butte Landfill acknowledges the above conditions for administrative permit amendments.

382. SIGNIFICANT PERMIT MODIFICATION.

01. Criteria. Significant modification procedures shall be used for applications requesting permit revisions that do not qualify as minor permit modifications or as administrative amendments. Nothing herein shall be construed to preclude the permittee from making changes consistent with this chapter that would render existing permit compliance terms and conditions irrelevant. A significant permit modification is a permit revision for changes that: (3-19-99)

a. Violate an existing Tier I permit term or condition derived from an applicable requirement; (3-19-99)

b. Involve significant changes to existing monitoring, reporting or recordkeeping requirements in the permit. Every significant change in existing monitoring terms or conditions (except more frequent monitoring or reporting under Subsection 381.01.c.) and every relaxation of reporting or recordkeeping terms or conditions shall be considered significant; (3-19-99)

c. Require or change a case-by-case determination of an emission limitation or other standard; a source-specific determination for temporary sources of ambient impacts; or a visibility or increment analysis; (3-19-99)

d. Seek to establish or change a permit term or condition for which there is no corresponding underlying applicable requirement and that the source has assumed to avoid an applicable requirement to which the source would otherwise be subject. Such terms and conditions include, but are not limited to, an enforceable emissions cap assumed to avoid classification as a modification under any provision of Title I of the Clean Air Act or an alternative emissions limit for an early reduction of hazardous air pollutants that was approved pursuant to regulations promulgated under 42 U.S.C. Section 7412(i)(5) of the Clean Air Act; (3-19-99)

e. Constitute a modification under any provision of Title I of the Clean Air Act; or (3-19-99)

f. Could be processed as an administrative amendment or as a minor modification, except the permittee has requested the change be processed as a significant modification, including incorporating the requirements of a permit to construct that was issued by the Department in accordance with Subsection 209.05.a. (3-19-99)

02. Significant Permit Modification Application Procedures. A permittee may initiate a significant permit modification by submitting a complete significant permit modification application to the Department. The application shall: (3-19-99)

a. Request the use of significant permit modification procedures and state at the beginning of the request that it is a "REQUEST FOR SIGNIFICANT PERMIT MODIFICATION"; (3-19-99)

b. Meet the standard application requirements of Sections 314 and 315; (3-19-99)

c. Provide a summary sheet; (3-19-99)

i. Describing the proposed significant permit modification; (3-19-99)

ii. Describing and quantifying any change in emissions resulting from the significant permit modification including, but not limited to, an identification of any new regulated air pollutant(s) that will be emitted; (4-5-00)

iii. Identifying any Tier I operating permit term or condition that will no longer be applicable as a result of the significant permit modification; and (3-19-99)

iv. Identifying new applicable requirement resulting from the change. (3-19-99)

d. Significant permit modifications shall be issued in accordance with all procedural requirements as they apply to Tier I operating permit issuance and renewal, including those for applications (Sections 314 and 315), public participation (Section 364), review by affected States (Sections 364 and 365), and review by EPA (Section 366). (3-19-99)

e. The Department will process the majority of significant permit modifications within nine (9) months of receiving a complete application. The Department shall determine which significant permit modification applications will be processed within nine (9) months. (3-19-99)

03. Implementation Procedures. The permittee shall comply with Sections 200 through 223 as applicable, including Subsection 209.05 governing permit to construct procedures for Tier I sources. (4-5-00)

04. Permit Shield. Upon final action by the Department, the permit shield described in Section 325 shall extend to significant permit modifications. (3-19-99)

The Milner Butte Landfill acknowledges the above conditions for significant permit modifications.

383. MINOR PERMIT MODIFICATION.

01. Criteria. (3-19-99)

a. Minor permit modification procedures may be used for permit modifications involving economic incentives, marketable permits, emissions trading, and other similar approaches explicitly provided for in the SIP or applicable requirements promulgated by EPA. A permittee may not use minor modification procedures for changes described in Subsections 382.01.a. through 382.01.e. (3-19-99)

b. Any other permit modification that is not required to be processed as a significant permit modification under Section 382. (3-19-99)

c. Groups of a permittee's applications eligible for processing as minor permit modifications may be processed under minor permit modification procedures if collectively, the changes proposed in the minor modification applications do not exceed the lesser of: (3-19-99)

i. Ten percent (10%) of the emissions allowed by the existing Tier I operating permit for the emissions unit for which the change is requested; (3-19-99)

ii. Twenty percent (20%) of the major facility criteria in Section 008; or (4-5-00)

iii. Five (5) tons per year. (3-19-99)

02. Minor Permit Modification Application Procedures. A permittee may initiate a minor permit modification by submitting a complete standard application described in Section 314 to the Department. The application shall: (3-19-99)

a. Request the use of minor permit modification procedures and state at the beginning of the request that it is a "REQUEST FOR MINOR PERMIT MODIFICATION," designate either "INDIVIDUAL" or "GROUP" processing, and provide a summary sheet; (3-19-99)

i. Describing the proposed minor permit modification; (3-19-99)

ii. Stating the date on which the proposed minor permit modification will occur at the facility; (3-19-99)

iii. Describing and quantifying any change in emissions resulting from the minor permit modification including, but not limited to, an identification of any new regulated air pollutant(s) that will be emitted; (4-5-00)

iv. Identifying any Tier I operating permit term or condition that will no longer be applicable as a result of the minor permit modification; (3-19-99)

v. Identifying any new applicable requirement that is applicable to the Tier I source as a result of the minor permit modification; (3-19-99)

vi. Certifying by a responsible official under Section 123 that the proposed permit modification meets the criteria for a minor permit modification and, if applicable, the use of group processing procedures; and (3-19-99)

vii. Listing the permittee's other pending applications awaiting group processing and a determination of whether the requested modification, aggregated with the other applications, equals or exceeds the thresholds under Subsection 383.01.c. above. (3-19-99)

b. Include completed forms for the Department to use to notify the EPA and affected States as required under Sections 364 and 366. (3-19-99)

c. Include the applicant's suggested draft Tier I permit with the minor permit modification. (3-19-99)

03. EPA and Affected State Notification Procedures. (3-19-99)

a. Within five (5) working days of receipt of a complete minor permit modification application, the Department shall notify EPA and the affected States of the requested permit modification and forward the forms completed by the applicant and other required information, if any, to the EPA and affected States. Affected States and EPA review shall occur simultaneously. (3-19-99)

b. On a quarterly basis or within five (5) working days of receiving an application demonstrating that the aggregate of a permittee's pending applications equals or exceeds the threshold level established in Subsection 383.01.c. above, whichever is earlier, the Department shall notify EPA and the affected States of the requested permit modification and forward the forms completed by the applicant and other required information, if any, to the EPA and affected States. Affected States and EPA review shall occur simultaneously. (3-19-99)

c. The Department shall promptly notify EPA and any affected States in writing including its reasons for not accepting any such recommendation if the Department refuses to accept all the timely recommendations submitted by affected States. (3-19-99)

d. Timetable for Issuance. The Department may not issue a final permit modification until after EPA's forty-five (45) day review period or until EPA has notified the Department that EPA will not object to issuance of the permit modification, whichever is first; although the Department can approve the permit modification prior to that time. (3-19-99)

e. Within ninety (90) days of the Department's receipt of a complete minor permit modification application or within fifteen (15) days after the end EPA's forty-five (45) day review period, whichever is later, the Department shall take one (1) of the following actions: (3-19-99)

i. Issue the minor permit modification as proposed; (3-19-99)

ii. Deny the minor permit modification application; (3-19-99)

iii. Determine that the requested minor permit modification does not meet the minor permit modification criteria and should be reviewed under the significant modification procedures; or (3-19-99)

iv. Revise the proposed minor permit modification, transmit the revised proposal to the EPA in accordance with Section 366, and notify the permittee. (3-19-99)

f. Within one hundred and eighty (180) days of the Department's receipt of a complete application for modifications eligible for group processing or within fifteen (15) days after the end of EPA's forty-five (45) day review period, whichever is later, the Department shall take one (1) of the actions specified in Subsections 383.03.e.i., 383.03.e.ii., 383.03.e.iii., or 383.03.e.iv. (3-19-99)

04. Implementation Procedures. (3-19-99)

a. The permittee may make the change proposed in its minor permit modification immediately upon submittal of a complete application to the Department before final action by the Department. (3-19-99)

b. After the source makes the allowed change and until the Department takes any of the actions specified in Subsections 383.03.e.i., 383.03.e.ii., or 383.03.e.iii., the permittee must comply with both the applicable requirements governing the change and the proposed terms and conditions. (3-19-99)

c. During this time period, the permittee need not comply with the existing permit terms and conditions it seeks to modify; provided that, if the source fails to comply with the applicable requirements governing the change and the proposed revisions, the existing permit terms and conditions it seeks to modify may be enforced against it. (3-19-99)

05. Permit Shield. The permit shield described in Section 325 shall not apply to any minor permit modification. (3-19-99)

The Milner Butte Landfill acknowledges the above conditions for minor permit modifications.

384. SECTION 502(B)(10) CHANGES AND CERTAIN EMISSION TRADES.

01. Criteria. This section authorizes emission changes within a permitted facility without requiring a permit revision, if the changes are not modifications under any provision of the Title I of the Clean Air Act and the changes

do not exceed the emissions allowable under the permit (whether expressed therein as a rate of emissions or total emissions). (3-19-99)

a. Changes authorized are changes that: (3-19-99)

i. Are Section 502(b)(10) changes; (3-19-99)

ii. Are changes involving trades of increases and decreases of emissions within the permitted facility where the State Implementation Plan provides for such emissions trades without requiring a permit revision. SIP trades are allowed in compliance with this Section even if the Tier I operating permit does not already provide for such emission trading; or (3-19-99)

iii. Are changes made under the terms and conditions of the Tier I permit that authorize the trading of emissions increases and decreases within the permitted facility for the purpose of complying with a federally-enforceable emissions cap that is established by the Department in the Tier I operating permit independent of otherwise applicable requirements. (3-19-99)

b. Changes constituting a modification under Title I of the Clean Air Act or subject to a requirement under Title IV of the Clean Air Act are not authorized by this Section. (3-19-99)

02. Notice Procedures. The permittee may make a change under this Section if the permittee provides written notification to the Department and EPA so that the notification is received at least seven (7) days in advance of the proposed change; or, in the event of an emergency, the permittee provides the notification so that it is received at least twenty-four (24) hours in advance of the proposed change. The permittee, the Department, and EPA shall attach the notification to their copy of the Tier I operating permit. (3-19-99)

a. For each such change, the written notification shall: (3-19-99)

i. State at the beginning of the notification “NOTIFICATION OF SECTION 502(b)(10) CHANGE” or “NOTIFICATION OF EMISSION TRADE”; (3-19-99)

ii. Describe the proposed change; (3-19-99)

iii. Provide the date on which the proposed change will occur; (3-19-99)

iv. Describe and quantify any expected change in emissions including identification of any new regulated air pollutant(s) that will be emitted; (4-5-00)

v. Identify any permit term or condition that is no longer applicable as a result of the change; (3-19-99)

vi. Specifically identify and describe the emergency, if any; and (3-19-99)

vii. Identify any new applicable requirement that would apply to the Tier I source as a result of the change. (3-19-99)

b. For changes described in Subsection 384.01.a.ii., the written notification shall also include: (3-19-99)

i. Identification of the provisions in the SIP that provide for the emissions trade; (3-19-99)

ii. All of the information required by the provision in the SIP authorizing the emissions trade; (3-19-99)

iii. Specific identification of the provisions in the SIP with which the permittee will comply; and (3-19-99)

iv. The pollutants subject to the trade. (3-19-99)

c. For changes described in Subsection 384.01.a.iii., the written notification shall also describe how the change will comply with the terms and conditions of the permit. (3-19-99)

03. Permit Shield. The permit shield described in Section 325 shall only extend to changes made in accordance with Subsection 384.01.a.iii. (3-19-99)

The Milner Butte Landfill acknowledges the above requirements regarding Section 502(b)(10) and emission trading changes.

385. OFF-PERMIT CHANGES AND NOTICE.

01. Criteria. This section authorizes changes that are neither addressed nor prohibited by the Tier I operating permit to be made without a permit revision if each such change meets all applicable requirements and does not violate any existing permit terms or conditions. Changes constituting a modification under Title I of the Clean Air Act, or subject to a requirement under Title IV of the Clean Air Act are not off-permit changes. (3-19-99)

02. Notice Procedure. Sources must provide written notice to the Department and EPA of each such change except changes that qualify as insignificant under Section 317, within seven (7) days of making the off-permit change. (3-19-99)

a. The written notification provided to the Department and EPA shall: (3-19-99)

i. State at the beginning of the notification “NOTIFICATION OF OFF-PERMIT CHANGE”; (3-19-99)

ii. Describe the off-permit change; (3-19-99)

iii. State the date on which the off-permit change will occur or has occurred; (3-19-99)

iv. Describe and quantify any change in emissions resulting from the off-permit change including, but not limited to, an identification of any new regulated air pollutant(s) that will be emitted; and (4-5-00)

v. Identify any new applicable requirement that is applicable to the Tier I source as a result of the off-permit change. (3-19-99)

b. The permittee shall keep a record at the facility describing all off-permit changes made at the Tier I source that result in emissions of a regulated air pollutant subject to an applicable requirement, but not otherwise regulated under the permit, and identifying the emissions resulting from those changes. (3-19-99)

03. Permit Shield Applicability. The permit shield described in Section 325 shall not apply to any off-permit change. (3-19-99)

The Milner Butte Landfill acknowledges the above conditions for off-permit changes and notices.

386. REOPENING FOR CAUSE.

The Department shall reopen a Tier I permit if cause exists. (3-19-99)

01. Criteria. Cause for reopening exists under any of the following circumstances: (3-19-99)

a. Additional applicable requirements become applicable to a major Tier I source with a remaining permit term of three (3) or more years; provided that no such reopening is required if the original effective date of the applicable requirement is later than the date on which the Tier I operating permit is due to expire and the original Tier I operating permit or any of its terms and conditions has not been extended pursuant to Section 368; provided further that the permittee must comply with the additional applicable requirement no later than the effective date; (3-19-99)

b. Whenever additional applicable requirements become applicable to an affected source, as defined for the purposes of the acid rain program; (3-19-99)

c. The Department or EPA determines that the Tier I operating permit contains a material mistake or inaccurate statements were used or considered in establishing the emissions standards or other terms or conditions of the Tier I operating permit; or (3-19-99)

d. The Department or EPA determines that the Tier I operating permit does not ensure compliance with the applicable requirements. (3-19-99)

02. Procedures for Reopenings. (3-19-99)

a. The Department shall follow the same procedures for reopening as they apply to initial permit issuance and shall affect only those parts of the permit for which cause to reopen exists. Reopenings shall be made as expeditiously as practicable in accordance with Sections 360 through 379. (3-19-99)

b. The Department shall notify the permittee in writing of reopening and provide a brief summary of the reason for the reopening at least thirty (30) days prior to the reopening. (3-19-99)

c. The EPA may initiate reopenings for circumstances listed in Subsections 386.01.a. through 386.01.d. by providing written notification to the Department and the permittee. (3-19-99)

i. The Department shall within ninety (90) days after receipt of notification from EPA, forward to EPA a proposed determination of termination, revocation, revision, or revocation and reissuance, as appropriate. The Administrator may extend the ninety (90) day period for an additional ninety (90) days if EPA finds that a new or revised permit application is necessary or that the Department must require the permittee to submit additional information. (3-19-99)

ii. The EPA will review the proposed determination from the Department within ninety (90) days of receipt. (3-19-99)

iii. The Department shall have ninety (90) days from receipt of an EPA objection to resolve any EPA objection and to terminate, modify, or revoke and reissue the permit. (3-19-99)

iv. If the Department fails to submit a proposed determination or fails to resolve any EPA objection, the EPA may terminate, modify, revoke and reissue the permit after taking the following actions: (3-19-99)

(1) Providing at least thirty (30) days' notice to the permittee in writing of the reason for such action, and (3-19-99)

(2) Providing the permittee an opportunity for comment on the EPA's proposed action and an opportunity for a hearing. (3-19-99)

The Milner Butte Landfill acknowledges the above conditions for reopening a Tier I operating permit.

387. REGISTRATION AND REGISTRATION FEES.
The purpose of Sections 387 through 397 is to set forth the requirements for the annual registration of Tier I sources, and the annual assessment and payment of fees to support the Tier I permitting program. (4-2-03)

The Milner Butte Landfill acknowledges the purpose of Section 387.

388. APPLICABILITY.
01. Applicability. Sections 387 through 397 shall apply to all major facilities, as defined in Section 008, including facilities that obtained air quality permits that limited potential emissions below major facility levels during the previous year. Facilities, sources and emissions exempt under Section 301 are not required to register or pay fees. (4-2-03)
02. Deferred Sources. Certain sources may qualify for and request deferral from the Tier 1 operating permit program under Subsection 301.02.b.iv. and thereby not pay Tier I fees. On or before such time as those deferred sources are required to submit a Tier 1 operating permit application, the Department shall reconsider Sections 387 through 397 to determine whether an alternative basis upon which those sources shall register and be assessed and pay fees should be developed. (4-2-03)

The Milner Butte Landfill acknowledges the above applicability to register and pay fees.

389. REGISTRATION INFORMATION.
Any person owning or operating a facility or source during the previous calendar year or any portion of the previous calendar year for which Sections 387 through 397 apply shall, by April 1 of each year, register with the Department and submit the following information (submittal forms are located at www.deq.idaho.gov): (3-19-07)
01. Facility Information. The name, address, telephone number and location of the facility; (5-1-94)
02. Owner/Operator Information. The name, address and telephone numbers of the owners and operators; (5-1-94)
03. Facility Emission Units. The number and type of emission units present at the facility or the Tier I permit number for the facility; and (4-2-03)
04. Pollutant Registration. The actual emissions from the previous calendar year for oxides of sulfur (SOx), oxides of nitrogen (NOx), particulate matter (PM_{10}), and volatile organic compounds (VOC) calculated using methods to include, but not limited to, continuous emissions monitoring (CEMS), certified source tests, material balances (mass-balance), state/industry emission factors, or AP-42 emission factors applied to throughput, actual operating hours, production rates, in-place control equipment, or the types of materials processed, stored, or combusted. (3-19-07)
05. Radionuclide Registration. The amount of radionuclides from facilities regulated under 40 CFR Part 61, Subpart H, for which the registrant wishes to be registered to emit from each source in curies per year except that no amount in excess of or less than an existing permit, consent order, or judicial order will be allowed. (5-1-94)

The Milner Butte Landfill acknowledges the above conditions for supplying registration information and will submit reports to the Department by April 1 of each year.

390. REGISTRATION FEE.
This registration fee structure shall be reviewed at least every two (2) years to assure the funds meet the presumptive minimum as defined by EPA. The annual registration fee as determined in Section 390 shall be paid as provided in Section 393. (3-19-07)
01. Tier I Annual Fee. The Tier I annual fee schedule shall be as follows: (3-19-07)
a. A fixed annual fee for Tier I major sources emitting regulated air pollutants listed in Subsection 389.04 as follows: (4-2-03)
i. Seven thousand (7,000) tons per year and above shall pay seventy-one thousand five hundred dollars ($71,500); (3-19-07)
ii. Four thousand five hundred (4,500) tons per year and above shall pay forty-two thousand nine hundred dollars ($42,900); (3-19-07)

iii. Three thousand (3,000) tons per year and above shall pay twenty-eight thousand six hundred dollars ($28,600); (3-19-07)

iv. One thousand (1,000) tons per year and above shall pay twenty-two thousand seven hundred fifty dollars ($22,750); (3-19-07)

v. Five hundred (500) tons per year and above shall pay eleven thousand fifty dollars ($11,050); (3-19-07)

vi. Two hundred (200) tons per year and above shall pay seven thousand one hundred fifty dollars ($7,150); and (3-19-07)

vii. Less than two hundred (200) tons per year shall pay three thousand five hundred seventy-five dollars ($3,575); plus (3-19-07)

b. A per ton annual fee of thirty-nine dollars and forty-eight cents ($39.48) per ton for all regulated air pollutant emissions listed in Subsection 389.04 as follows: (3-19-07)

i. Greater than or equal to four thousand five hundred (4,500) tons per year not to exceed one hundred forty-three thousand dollars ($143,000); (3-19-07)

ii. Greater than or equal to three thousand (3,000) but less than four thousand five hundred (4,500) tons per year not to exceed seventy-one thousand five hundred dollars ($71,500); (3-19-07)

iii. Greater than or equal to one thousand (1,000) but less than three thousand (3,000) tons per year not to exceed thirty-five thousand one hundred dollars ($35,100); (3-19-07)

iv. Greater than or equal to five hundred (500) but less than one thousand (1,000) tons per year not to exceed twenty-five thousand twenty-five dollars ($25,025); (3-19-07)

v. Greater than or equal to two hundred (200) but less than five hundred (500) tons per year not to exceed ten thousand seven hundred twenty-five dollars ($10,725); and (3-19-07)

vi. Less than two hundred (200) tons per year not to exceed three thousand five hundred seventy-five dollars ($3,575). (3-19-07)

02. Fee-for-Service. The fee-for-service shall be as follows: Sources requesting Section 300 permit modifications or renewals, or receiving program maintenance services, including but not limited to site visits, response to public inquiries, modeling, responses to site questions and opacity readings by the Department shall be assessed a fee for actual time expended and expenses incurred by the Department in the previous calendar year in an amount not to exceed twenty thousand dollars ($20,000) per facility per year as a fee-for-service. Service shall be conducted by qualified Department staff or contractors. (3-19-07)

03. Radionuclide Registration Fee. (4-2-03)

a. A registration fee of five dollars per curie per year ($5/curie/year) shall be paid by facilities regulated under 40 CFR Part 61, Subpart H. (4-2-03)

b. The registration fee may be paid as provided in Section 397. (4-2-03)

The Milner Butte Landfill acknowledges the above conditions registration fees.

391. REQUEST FOR INFORMATION.

Any additional information, plans, specifications, evidence or documents that the Department may require to make the determinations required under Sections 387 through 397 shall be furnished on request. (4-2-03)

The Milner Butte Landfill will furnish any additional information requested by the Department.

392. REGISTRATION FEE ASSESSMENT.

All facilities to which Sections 387 through 397 apply shall pay to the Department an annual registration fee as required by Section 390. The Department shall determine the fee based on the information supplied by the registrant and the Department's analysis of information available. In the event of a failure of a facility to submit pertinent registration information, the Department may calculate the fee and shall assess the facility the fee and the costs of calculating the fee. No later than May 15 of each year, or within fifteen (15) days following the adjournment of the regular session of the Idaho State Legislature, whichever is later, the Department shall send to each registrant, to which Sections 387 through 397 apply, by certified mail, an assessment of the annual fee payable by the registrant. (3-19-07)

The Milner Butte Landfill acknowledges the above conditions for registration fee assessments.

393. PAYMENT OF TIER I REGISTRATION FEE.

01. Fee Payment Date. The registration fee shall be paid to and received by the Department no later than July 1 of each year, or within forty-five (45) days following the receipt of the registration fee assessment in Section 392, whichever is later. Checks should be made payable to "Department of Environmental Quality."(3-19-07)

02. Fee Payments Mailing Address. All fee payments should be sent to:

Air Quality Tier I Registration Fees
Idaho Department of Environmental Quality
1410 N. Hilton, Boise, Idaho 83706-1255

The Milner Butte Landfill acknowledges the fee payment date and the mailing address for fee payments.

394. EFFECT OF DELINQUENCY ON APPLICATIONS.

No permit to construct or operate, other than those issued at the discretion of the Director, shall be accepted for processing, processed, or issued by the Department for any facility or to any person having Tier I operating permit fees delinquent in full or in part. (4-2-03)

The Milner Butte Landfill acknowledges the effect of fee delinquency on applications.

395. APPEALS.

Persons may file an appeal within thirty-five (35) days of the date the person received an assessment issued under Section 392. The appeal shall be filed in accordance with IDAPA 58.01.23, "Rules of Administrative Procedure Before the Board of Environmental Quality." (3-19-07)

The Milner Butte Landfill acknowledges the ability to file an appeal.

396. EXEMPTIONS.

01. Registration Fees. The following facilities or sources are exempt from paying registration fees under Sections 387 through 397: (4-2-03)

a. Facilities and sources specified by the Department, after public notice, as exempt from the payment of registration fees; and (5-1-94)

b. Country grain elevators. (5-1-94)

02. Registering and Paying Fees. The following facilities or sources are exempt from registering and paying registration fees under Sections 387 through 397: (4-2-03)

a. Facilities and sources specified by the Department, after public notice, as exempt from registration and the payment of registration fees; (3-19-99)

b. Confined animal feeding operations; and (3-19-99)

c. Insignificant activities identified in Subsection 317.01. (3-19-99)

03. Paying Fees. The following emissions are exempt from registering and paying registration fees under Sections 387 through 397: (4-2-03)

a. Fugitive emissions from wood products. (3-7-95)L

b. Fugitive dust emissions, except facilities listed in Subsections 008.10.c.i. and 008.10.c.ii. Facilities listed in that section shall not be required to pay fees for fugitive dust emission in excess of one hundred (100) tons. (4-5-00)

The Milner Butte Landfill acknowledges the above exemptions.

397. LUMP SUM PAYMENTS OF REGISTRATION FEES.

01. Agreement. The Department may, in its discretion, enter an agreement with any person for the lump sum payment of all, or any addition to, the registration fees required by Section 390. (3-19-07)

02. Minimum Amount. The minimum amount for any lump sum agreement shall be three hundred thousand dollars ($300,000). (5-1-94)

03. Payment Waiver. Upon the execution and full performance of the agreement by the person, the Department shall waive the payment requirements of Section 390. All other provisions of Sections 387 through 397 shall remain applicable to the person. (3-19-07)

The Milner Butte Landfill acknowledges the above conditions for payments of registration fees.

590. NEW SOURCE PERFORMANCE STANDARDS.
The owner or operator of any stationary source shall comply with 40 CFR Part 60 as applicable to the stationary source. The applicable definitions for this Section shall be the definitions set forth in 40 CFR Part 60. (4-5-00)

The Milner Butte Landfill acknowledges the NSPS standards for stationary sources under 40 CFR Part 60 and will comply with applicable parts.

591. NATIONAL EMISSION STANDARDS FOR HAZARDOUS AIR POLLUTANTS.
The owner or operator of any stationary source shall comply with 40 CFR Part 61 and 40 CFR Part 63 as applicable to the stationary source. (5-1-94)

The Milner Butte Landfill acknowledges the NESHAP standards for stationary sources under 40 CFR Part 63 and will comply with applicable parts.

625. VISIBLE EMISSIONS.

A person shall not discharge any air pollutant into the atmosphere from any point of emission for a period or periods aggregating more than three (3) minutes in any sixty (60) minute period which is greater than twenty percent (20%) opacity as determined by this section. (4-5-00)

01. Exemptions. The provisions of this section shall not apply to: (4-5-00)
a. Kraft Process Lime Kilns, if operating prior to January 24, 1969; or (5-1-94)
b. Carbon Monoxide Flare Pits on Elemental Phosphorous Furnaces, if operating prior to January 24, 1969; or (5-1-94)
c. Liquid Phosphorous Loading Operations, if operating prior to January 24, 1969; or (5-1-94)
d. Wigwam Burners; or (5-1-94)
e. Kraft Process Recovery Furnaces. (5-1-94)
f. Calcining Operations Utilizing an Electrostatic Precipitator to Control Emissions, if operating prior to January 24, 1969. (5-1-94)

The Milner Butte Landfill will operate a landfill gas flare and will not discharge any air pollutant into the atmosphere from any emission point for a period(s) aggregating more than three (3) minutes in any sixty (60) minute period which is greater than twenty percent (20%) opacity.

02. Standards for Exempted Sources. Except as provided in Section 626, for sources exempted from the provisions of this section, a person shall not discharge into the atmosphere from any point of emission, for any air pollutant for a period or periods aggregating more than three (3) minutes in any sixty (60) minute period which is greater than forty percent (40%) opacity as determined by this section. (4-5-00)

The Milner Butte Landfill is not an exempted source.

03. Exception. The provisions of this section shall not apply when the presence of uncombined water, nitrogen oxides and/or chlorine gas are the only reason(s) for the failure of the emission to comply with the requirements of this rule. (4-5-00)

The Milner Butte Landfill acknowledges this exception.

04. Test Methods and Procedures. The appropriate test method under this section shall be EPA Method 9 (contained in 40 CFR Part 60) with the method of calculating opacity exceedances altered as follows: (4-5-00)

a. Opacity evaluations shall be conducted using forms available from the Department or similar forms approved by the Department. (4-5-00)

b. Opacity shall be determined by counting the number of readings in excess of the percent opacity limitation, dividing this number by four (4) (each reading is deemed to represent fifteen (15) seconds) to find the number of minutes in excess of the percent opacity limitation. This method is described in the Procedures Manual for Air Pollution Control, Section II (Evaluation of Visible Emissions Manual), September 1986. (4-5-00) c. Sources subject to New Source Performance Standards must calculate opacity as detailed above and as specified in 40 CFR Part 60. (4-5-00)

The Milner Butte Landfill will perform opacity testing in accordance with the above requirements.

05. Applicability. Section 625 shall not apply to the open burning of crop residue. (5-8-09)

The Milner Butte Landfill will operate a landfill gas flare and is subject to Section 625.

650. RULES FOR CONTROL OF FUGITIVE DUST.

The purpose of Sections 650 through 651 is to require that all reasonable precautions be taken to prevent the generation of fugitive dust. (5-1-94)

The Milner Butte Landfill acknowledges the purpose of Sections 650 and 651.

651. GENERAL RULES.

All reasonable precautions shall be taken to prevent particulate matter from becoming airborne. In determining what is reasonable, consideration will be given to factors such as the proximity of dust emitting operations to human habitations and/or activities, the proximity to mandatory Class I Federal Areas and atmospheric conditions which might affect the movement of particulate matter. Some of the reasonable precautions may include, but are not limited to, the following: (3-30-07)

01. Use of Water or Chemicals. Use, where practical, of water or chemicals for control of dust in the demolition of existing buildings or structures, construction operations, the grading of roads, or the clearing of land. (5-1-94)

02. Application of Dust Suppressants. Application, where practical, of asphalt, oil, water or suitable chemicals to, or covering of dirt roads, material stockpiles, and other surfaces which can create dust. (5-1-94)

03. Use of Control Equipment. Installation and use, where practical, of hoods, fans and fabric filters or equivalent systems to enclose and vent the handling of dusty materials. Adequate containment methods should be employed during sandblasting or other operations. (5-1-94)

04. Covering of Trucks. Covering, when practical, open bodied trucks transporting materials likely to give rise to airborne dusts. (5-1-94)

05. Paving. Paving of roadways and their maintenance in a clean condition, where practical. (5-1-94)

06. Removal of Materials. Prompt removal of earth or other stored material from streets, where practical. (5-1-94)

The Milner Butte Landfill acknowledges these general rules for control of fugitive dust and will generally utilize controls under (01), (05) and (06) above.

675. FUEL BURNING EQUIPMENT -- PARTICULATE MATTER.

The purpose of Sections 675 through 681 is to establish particulate matter emission standards for fuel burning equipment. (4-5-00)

The Milner Butte Landfill acknowledges the purpose of Sections 675 through 681.

676. STANDARDS FOR NEW SOURCES.

A person shall not discharge into the atmosphere from any fuel burning equipment with a maximum rated input of ten (10) million BTU's per hour or more, and commencing operation on or after October 1, 1979, particulate matter in excess of the concentrations shown in the following table:

FUEL TYPE	ALLOWABLE PARTICULATE gr/dscf	EMISSIONS Oxygen
Gas	.015	3%
Liquid	.050	3%
Coal	.050	8%
Wood Product	.080	8%

The effluent gas volume shall be corrected to the oxygen concentration shown. (5-1-94)

The Milner Butte Landfill will operate a single landfill gas flare and will not discharge particulate matter in excess of the concentrations shown in the table above.

859. STANDARDS OF PERFORMANCE FOR MUNICIPAL SOLID WASTE LANDFILLS THAT COMMENCED CONSTRUCTION, RECONSTRUCTION OR MODIFICATION ON OR AFTER MAY 30, 1991.

01. Applicability. All owners or operators of each small or large municipal solid waste landfills in any one (1) of the following categories are subject to Section 859: (4-5-00)

a. Landfills constructed after May 30, 1991; (4-5-00)

b. Existing landfills with modifications after May 30, 1991; or (4-5-00)

c. Landfills that closed after November 8, 1987 with modifications after May 30, 1991. (4-5-00)

The Milner Butte Landfill has commenced construction after May 30, 1991.

02. Definitions. Unless specifically provided otherwise immediately below, the definitions for all terms set forth in Section 859 shall be the definitions set forth in 40 CFR Part 60. The following definitions apply to this Section: (4-5-00)

a. “Closed municipal solid waste landfill” (closed landfill) means a landfill in which solid waste is no longer being placed, and in which no additional solid wastes will be placed without first filing a notification of modification as prescribed under 40 CFR 60.7(a)(4). Once a notification of modification has been filed, and additional solid waste is placed in the landfill, the landfill is no longer closed. A landfill is considered closed after meeting the criteria of 40 CFR 258.60. (4-5-00)

b. “Effective date” means July 2, 1999. (4-5-00)

c. “Existing municipal solid waste landfill” (existing landfill) means a municipal solid waste landfill that began construction, reconstruction or modification before May 30, 1991 and has accepted waste at any time since November 8, 1987 or has additional design capacity available for future waste deposition. (4-5-00)

d. “Large municipal solid waste landfill” (large landfill) means a municipal solid waste landfill with a design capacity greater than or equal to two point five (2.5) million megagrams or two point five (2.5) million cubic meters. (4-5-00)

e. “Modification” means an action that results in an increase in the permitted volume design capacity of the landfill by either horizontal or vertical expansion based on its permitted design capacity as of May 30, 1991. Modification does not occur until the owner or operator commences construction on the horizontal or vertical expansion. (4-5-00)

f. “Municipal solid waste landfill” (landfill) means an entire disposal facility in a contiguous geographical space where household waste is placed in or on land. A municipal solid waste landfill may also receive other types

of RCRA Subtitle D wastes such as commercial solid waste, nonhazardous sludge, conditionally exempt small quantity generator waste, and industrial solid waste. Portions of a municipal solid waste landfill may be separated by access roads and may be publicly or privately owned. A municipal solid waste landfill may be a new municipal solid waste landfill, an existing municipal solid waste landfill, or a lateral expansion (modification). (4-5-00)

g. "New municipal solid waste landfill" (new landfill) means a municipal solid waste landfill that began construction, reconstruction or modification or began accepting waste on or after May 30, 1991. (4-5-00)

h. "Small municipal solid waste landfill" (small landfill) means a municipal solid waste landfill with a design capacity less than two point five (2.5) million megagrams or two point five (2.5) million cubic meters.(4-5-00)

The Milner Butte Landfill acknowledges the above definitions.

03. General Requirements. All owners or operators of landfills subject to Section 859 must comply with 40 CFR Part 60, Subpart WWW, as amended by 63 Fed. Reg. 32,743-53 (June 16, 1998) and 64 Fed. Reg. 9,257- 62 (February 24, 1999) and incorporated by reference into these rules at Section 107. Where "Administrator" or "EPA" appears in 40 CFR Part 60, "Department" shall be substituted, except in any section of 40 CFR Part 60 for which a federal rule or delegation specifically indicates that authority will not be delegated to the state. (4-5-00)

The Milner Butte Landfill acknowledges the general requirements to comply with 40 CFR Part 60, Subpart WWW.

04. Permitting Requirements. All owners or operators of landfills subject to Section 859 must comply with Federal Operating Permit Requirements (Title V) as specified in Sections 300 through 399 of these rules: (4-5-00)

a. All owners or operators of existing large landfills with modifications after May 30, 1991 must submit a complete Federal Operating Permit application by June 1, 2000. (4-5-00)

b. All owners or operators of existing large landfills with modifications after March 12, 1996 must submit a complete Federal Operating Permit application the earliest of one (1) year from the date EPA approves the Clean Air Act Section 111(d) State Plan for Section 859, or within one (1) year of the modification. (4-5-00)

c. All owners or operators of new large landfills, which includes newly constructed large landfills after March 12, 1996 and existing small landfills that become large landfills after March 12, 1996 must submit a complete Federal Operating Permit application within one (1) year of becoming subject to this requirement. (4-5-00)

d. All owners or operators of new and modified existing small landfills that are major sources as defined in 40 CFR Part 60, Subpart WWW, as amended by 63 Fed. Reg. 32,743-53 (June 16, 1998) and 64 Fed. Reg. 9,257-62 (February 24, 1999), must submit a complete Federal Operating Permit application within one (1) year of becoming a major source. (4-5-00)

The Milner Butte Landfill has commenced construction after May 30, 1991, has a design capacity greater than 2.5 million megagrams and 2.5 million cubic meters and exceeded 50 megagrams of NMOC in 2009.

05. Reporting Requirements. All owners or operators of landfills subject to Section 859 must comply with the following: (4-5-00)

a. All owners or operators of large landfills must: (4-5-00)

i. Submit an Initial Design Capacity Report and an Initial Nonmethane Organic Compound Report within thirty (30) days of the effective date of Section 859; and (4-5-00)

The Milner Butte Landfill is considered a large landfill and has previously submitted these required reports.

ii. Submit an annual Nonmethane Organic Compound Report until nonmethane emissions are less than fifty (50) Mg/yr. (4-5-00)

The Milner Butte Landfill believes this condition is unnecessary because the landfill has already installed a gas collection and control system and is not attempting to remove it. The Milner Butte Landfill believes this contition should only apply when the landfill is attempting to remove a gas collection

and control system, and should be done in accordance with 40 CFR Part 60, Subpart WWW Sec. 60.752.

b. All owners or operators of small landfills of Section 859 must submit an Initial Design Capacity Report and an Initial Nonmethane Organic Compound Report within thirty (30) days of the effective date of Section 859. (4-5-00)

The Milner Butte Landfill is a large landfill.

c. All owners or operators of landfills subject to Section 859 after the effective date of Section 859 must submit an Initial Design Capacity Report and an Initial Nonmethane Organic Compound Report within thirty (30) days of becoming subject to Section 859. (4-5-00)

The Milner Butte Landfill has previously submitted these required reports.

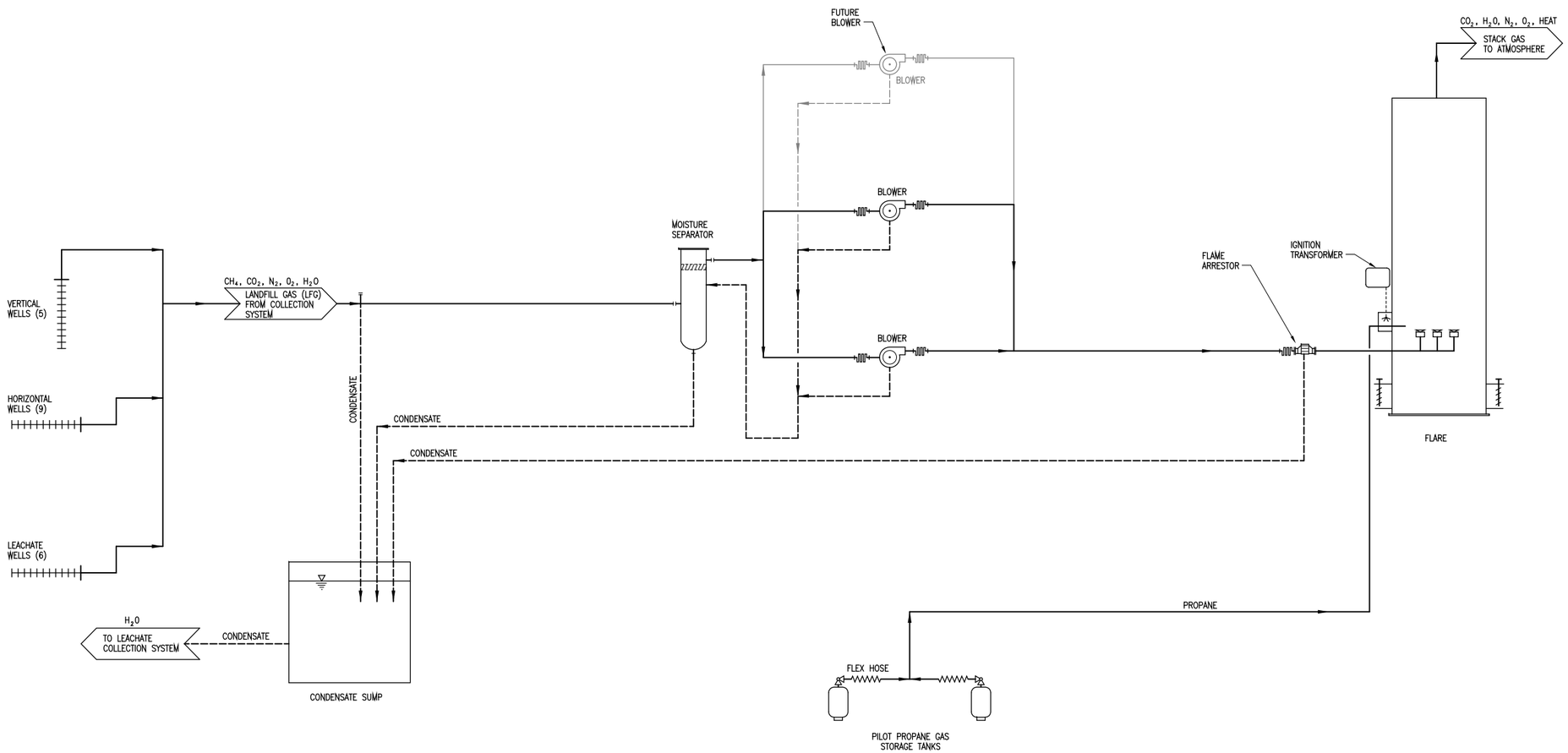

NO.	REVISION	DATE

SHEET TITLE
FLARE STATION PROCESS FLOW DIAGRAM

PROJECT TITLE
INITIAL TIER I PERMIT APPLICATION
MILNER BUTTE LANDFILL

Southern Idaho Solid Waste

SCS ENGINEERS
Environmental Consultants and Contractors
2405 140th Avenue NE, Suite 107
Bellevue, Washington 98005
(425) 746-4600 FAX: (425) 746-6747

PROJ. NO. 04209002.00	DWN. BY: LEL	ACAD FILE: FIGURE 1	
DSN. BY: EMS	CHK. BY: TAM	APP. BY: JMR	

DATE: OCTOBER 2010

SCALE: NOT TO SCALE

FIGURE NO.
1

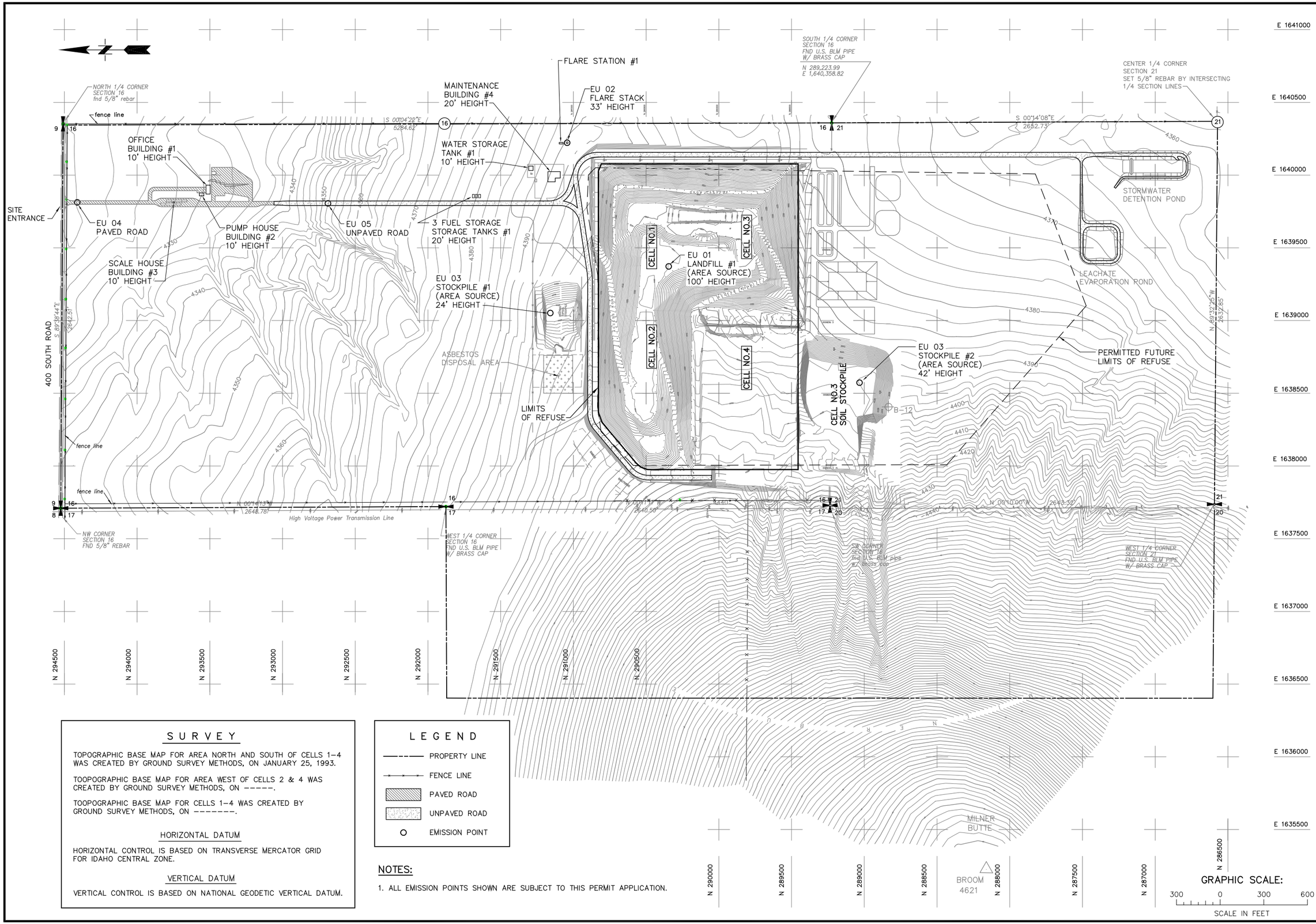

SURVEY

TOPOGRAPHIC BASE MAP FOR AREA NORTH AND SOUTH OF CELLS 1–4 WAS CREATED BY GROUND SURVEY METHODS, ON JANUARY 25, 1993.

TOOPOGRAPHIC BASE MAP FOR AREA WEST OF CELLS 2 & 4 WAS CREATED BY GROUND SURVEY METHODS, ON -----.

TOOPOGRAPHIC BASE MAP FOR CELLS 1–4 WAS CREATED BY GROUND SURVEY METHODS, ON -------.

HORIZONTAL DATUM

HORIZONTAL CONTROL IS BASED ON TRANSVERSE MERCATOR GRID FOR IDAHO CENTRAL ZONE.

VERTICAL DATUM

VERTICAL CONTROL IS BASED ON NATIONAL GEODETIC VERTICAL DATUM.

LEGEND

- PROPERTY LINE
- FENCE LINE
- PAVED ROAD
- UNPAVED ROAD
- EMISSION POINT

NOTES:

1. ALL EMISSION POINTS SHOWN ARE SUBJECT TO THIS PERMIT APPLICATION.

NO.	REVISION	DATE

SHEET TITLE: PLOT PLAN

PROJECT TITLE: INITIAL TIER 1 PERMIT APPLICATION MILNER BUTTE LANDFILL

Southern Idaho Solid Waste

SCS ENGINEERS
Environmental Consultants and Contractors
2405 140th Avenue NE, Suite 107
Bellevue, Washington 98005
(425) 746-8600 FAX: (425) 746-6747

PROJ. NO.	04209002.00	DWN. BY:	LEL	ACAD FILE:	FIGURE 2
DSN. BY:	EMS	CHK. BY:	TAM	APP. BY:	JMR

DATE: OCTOBER 2010

SCALE: AS SHOWN

FIGURE NO. 2