CENTRA
CONSULTING INC.

RECEIVED
FEB 01 2012
DEPARTMENT OF ENVIRONMENTAL QUALITY
STATE A C PROGRAM

February 1, 2012

Mr. Bill Rogers, P.E.
Idaho Department of Environmental Quality
1410 N. Hilton
Boise, Idaho 83706

Re: Application for Permit to Construct
Western Construction, Inc., Hot Plant #2

Dear Mr. Rogers:

CENTRA Consulting, Inc. is pleased to submit the enclosed Application for a Permit to Construct (PTC) on behalf of Western Construction, Inc. The application is for a statewide, portable hot plant PTC.

The equipment and operations to be covered under this permit include the following:

1) A drum dryer;
2) An asphalt tank heater;
3) An operations generator;
4) A night generator;
5) Various asphalt and fuel storage tanks;
6) HMA storage silos; and
7) An aggregate vibrating screen and various conveyors.

The enclosed application materials demonstrate that, with the recommended emissions controls and limitations on operation, the total emissions from this facility are compliant with the *Rules for the Control of Air Pollution in Idaho* (IDAPA 58.01.01).

Included in this submittal is 1) the $1,000 permit application fee required by IDAPA 58.01.01.224, 2) one hard copy of the application materials, 3) one CD containing an electronic copy of the application and all spreadsheet calculations, and 4) one hard copy of the Air Quality Modeling Assessment with a CD containing the input and output files from the modeling assessment.

If you have any questions about the enclosed submittals, please contact me directly at (208) 571-6039 or by email at sogle@centrainc.com.

Sincerely,

Steve M. Ogle, P.E.
Senior Engineer

Cc: Jason Jones (Western Construction, Inc.)
Project File

Western CONSTRUCTION, INC.

Western Construction, Inc.
Hot Plant #2

Application for a Permit to Construct

February 1, 2012

CENTRA
CONSULTING INC.

Western CONSTRUCTION, INC.

Western Construction, Inc.
Hot Plant #2

Application for a Permit to Construct

February 1, 2012

PROFESSIONAL ENGINEER
REGISTERED
10975
2-1-12
STATE OF IDAHO
STEVE M. OGLE

CENTRA
CONSULTING INC.

Table of Contents

1. Introduction 1
2. Process Description 1
3. Equipment 2
4. Emissions Estimates 3
   4.1 Drum Dryer 3
   4.2 Asphalt Tank Heater 5
   4.3 Generators 6
   4.4 Storage Tanks 7
   4.5 Silo Filling 9
   4.6 Truck Loadout 10
   4.7 Aggregate Screening and Handling 10
   4.8 Facility-wide Emission Rates 11
5. Modeling Assessment 16
6. TRACT Analysis 16
7. Regulatory Assessment 18
   7.1 Idaho Standards 18
   7.2 New Source Performance Standards 22
   7.3 National Emission Standards for Hazardous Air Pollutants 40
   7.4 Maximum Achievable Control Technologies 40
8. Co-Located Sources 44
9. Application/Processing Fees 44
10. Summary & Conclusions 45
11. References 47

Appendices

Appendix 1: DEQ Forms for a Portable HMA Plant
Appendix 2: Figures
Appendix 3: Equipment/Vendor Specifications
Appendix 4: Emissions Calculations
Appendix 5: Air Quality Modeling Analysis

1. Introduction

This permit application is being submitted to the Idaho Department of Environmental Quality (DEQ) by Centra Consulting, Inc. (Centra) on behalf of Western Construction, Inc. (Western Construction). The modeling analyses conducted for the permit application were conducted by Enviroscientists, Inc. (Enviroscientists). Western Construction is procuring a new, portable hot mix asphalt (HMA) plant that will be used for asphalt paving of roadways (SIC Code: 2951; NAICS: 324121), and is seeking a Permit-to-Construct (PTC) from DEQ for the HMA plant.

The new HMA plant will have the potential to emit regulated air pollutants when in operation, and Western Construction is applying for a statewide, portable HMA plant PTC. While DEQ's standard permitting forms have been completed as part of this application package (refer to Appendix 1 for the completed forms), Western Construction is seeking a permit with setback allowances for four different production rate scenarios. This will allow the facility to operate the plant at a given production rate, based on at setbacks available at any given site that it might be able to locate for a particular job (i.e., smaller sites would require a lower production rate, while larger sites with larger setback distances could allow higher production rates). Emissions calculations and dispersion modeling assessments have been provided for each scenario, and a preconstruction compliance demonstration for toxic air pollutants (TAPs), per the terms of IDAPA 58.01.01.210, has been provided for the worst-case (i.e., highest production rate) scenario.

Western Construction and Centra staff initially met with DEQ personnel to discuss the project on May 23, 2011. Since that initial meeting, Centra has worked closely with DEQ's HMA permitting and dispersion modeling staff to develop this application in accordance with the agency's current methodologies for permitting a statewide, portable HMA.

2. Process Description

An HMA plant is an assembly of mechanical and electronic equipment where aggregates are blended, heated, dried, and mixed with an asphalt binder to produce HMA meeting the specifications required for a particular paving project. The HMA plant proposed for use by Western Construction is a portable, counterflow drum mix plant. The fundamental components of a portable drum mix plant are:

1) Aggregate cold-feed bins;
2) Aggregate conveyors, screening, and weighing systems;
3) Drum dryer/mixer;
4) Dust collection system and baghouse;
5) Hot mix or slat conveyor;
6) HMA storage silos;
7) Control van;
8) Generators; and
8) Binder and fuel storage tanks.

The sequence of processes involved in a typical drum mix plant operation begins by depositing controlled gradations of aggregates into the cold feed bins. Materials are manually fed from stockpiles to the bins by a front-end loader. Aggregates are fed from the bins in exact proportions onto the cold-feed conveyor, screened, and then conveyed into the drum dryer/mixer. A separate bin and conveyor system can also be used to load and process recycled asphalt pavement (RAP) into the drummer mixer. An automatic aggregate weighing system monitors the amount of aggregate flowing into the drum mixer. The weighing system is interlocked with the controls on the binder storage pump, which draws asphalt binder from a heated storage tank and introduces binder into the drum where the binder and aggregate are thoroughly blended by the rotating action of the drum. In a counterflow drum mix plant, the material flow in the drum is opposite to the direction of exhaust gases. From the drum, the HMA is transported by a covered slat conveyor to HMA storage silos, from which the mixture is loaded into trucks and hauled to the paving site as needed.

A dust collection system will be used to capture excess dust escaping from the drum, and will route these streams through a baghouse prior to release to atmosphere. For this particular HMA plant, Western Construction will also collect and route emissions from silo loading operations to the baghouse.

A typical equipment layout drawing used for this process is contained in Appendix 2 of this application. All plant operations are electronically monitored and controlled from instruments in the control van. Various tanks will be located at the site to supply fuel for the drum mixer, asphalt tank heater, and/or other equipment used onsite (e.g., loaders, paving equipment, etc.). In areas without electrical service, electric power will be supplied by one of two generators: a larger generator used for daily operations and a smaller generator that is used for limited night and/or weekend operations.

3. Equipment

The equipment to be covered under this permit application includes the following:

1) One (1) counterflow drum dryer: Gencor Industries, Inc., Model 400 Portable Insulated Ultradrum with Ultra II-135H burner, equipped with a Gencor Model CFP-182 bag house. Production capacity rated at 400 tons per hour (T/hr), and burner capacity rated at 135 million British thermal units per hour (MMBTU/hr).
2) One (1) asphalt tank heater: Gencor Industries, Inc., Model HYCGO-100. Burner capacity rated at 0.5 MMBTU/hr.
3) One (1) operations generator: Cummins Inc., Model QST30-G2/2006 Model Year, manufactured in 2011. Generator capacity rated at 800 kilowatts (kW), and gross engine output rated at 1200 brake horse power (bhp).
4) One (1) night generator: Wacker, Model G-50, manufactured in 2010 (equipped with John Deere PowerTech 4045D engine, 2007 Model Year). Generator capacity rated at 38 kW, and gross engine output rated at 67 bhp.
5) One (1) liquid asphalt storage tank, 30,000-gallon capacity.
6) One (1) recycled fuel oil (RFO) storage tank, 15,000-gallon capacity.
7) One (1) No. 2 diesel storage tank, 6,000-gallon capacity.

8) One (1) aggregate vibrating screen: Deister Machine Company, Inc.
9) Cold Feed Bins, RAP Bins, HMA Storage Silos, and various conveyors. Loading emissions from the HMA Storage Silos will be routed to the Gencor Model CFP-182 bag house listed with the drum dryer.

Manufacturer's equipment information and specifications for the HMA plant are presented in Appendix 3 of this document.

4. Emissions Estimates

This section of this document details methodologies and assumptions used to quantify potential emission rates of regulated pollutants from each source associated with the proposed facility. Potential emission rate estimates for all criteria, hazardous, and toxic air pollutants from each source were identified and conservatively calculated by using emission factors from the most current version of the U.S. Environmental Protection Agency's (EPA's) *Compilation of Air Pollutant Emission Factors*, commonly referred to as "AP-42".

The following sections discuss controlled, potential emissions at the highest hourly production rate proposed for use under the PTC, as this is the worst-case scenario with respect to emission rates and/or regulatory determinations. The controlled, potential emissions rate estimates are based on operation of control equipment and within the context of operational and/or production based limits. Western Construction understands that these limits must be incorporated into the PTC in order to be considered federally-enforceable limits on the facility's potential to emit. Uncontrolled, potential emissions rates from the entire facility at the highest hourly production rate are presented and discussed in Section 4.8 of this application.

Copies of the spreadsheets used for all emission rate calculations are contained in Appendix 4. These spreadsheets document the source of each emission factor used, as well as all assumptions applied within the calculations. As indicated in Section 1 of this application, Western is seeking a statewide, portable PTC with setback allowances for four different production rate scenarios. These production rates are 350, 400, 450, and 500 T/hr, and emission inventories for each production rate have been prepared and are presented in Appendix 4. It should be noted that control equipment, the daily hours of operation, and the number of operating days per year are consistent in each emissions inventory for each of the four different hourly production rates. A spreadsheet emission inventory for uncontrolled emission rates (i.e., operations with no control equipment at 500 T/hr and 8760 hours/year) was also developed and is contained in Appendix 4.

4.1 Drum Dryer

Potential emission rate estimates for the drum dryer follow the calculation methodologies outlined in Chapter 11.1 of AP-42, and are therefore based upon HMA production rates. The single exception to this approach appears in the calculations for nitrous oxide emissions from diesel or RFO combustion, which rely upon fuel combustion-based emission factors and the drum manufacturer's rated burner capacity to derive potential emission rates. The basis for all

emission factors is documented in the spreadsheet calculations contained in Appendix 4 of this application.

While the manufacturer's rated production capacity of the drum dryer is 400 T/hr, Western Construction's experience with drum dryer operations indicates that a higher production rate can be obtained in the field if the aggregate moisture content is low enough. Consequently, the potential emission rate estimates utilize a production rate of 500 T/hr in order to avoid a permit limitation at the manufacturer's rating. For calculations relying upon burner capacity, the manufacturer's rated capacity of 135 MMBTU/hr was used (i.e., no excess heat is required to operate the dryer at a higher production capacity).

The maximum, annual production rate capacity of the unit was estimated to be 1,193,750 T/yr. This is based on 1) an hourly production rate of 500 T/hr, 2) 12.5 hours of operation per day, and 3) 191 days of operation per year. This annual production rate is equivalent to 2387.5 hours of operation per year. Operations are generally expected to occur between March and November of each year, but will be subject to weather conditions in the shoulder months.

Emission estimates have been calculated for operation of the dryer with diesel, RFO, natural gas, and propane. The worst case emission rate across all fuels was used as the basis for quantifying the potential emission rate of each regulated pollutant.

Emission factors for a dryer with fabric filtration were used, when available in AP-42.

4.1.1 Drum Dryer Criteria Pollutant Emissions

Hourly and annual potential emission rates of all criteria pollutants from the drum dryer at an hourly production rate of 500 T/hr are summarized in Table 4-1 below. All emission rate calculations assume that the baghouse will be in operation at all times. The annual emission rate calculations also incorporate on the annual operational limits discussed in the preceding paragraphs. These assumptions require that the PTC contain associated limits, to establish federally-enforceable limits on the potential of the source.

Table 4-1: Controlled Potential Criteria Emission Rates from the Drum Dryer

Pollutant	Hourly Emission Rate (lb/hr)	Annual Emission Rate (T/yr)
Carbon Monoxide	65.00	77.59
Carbon Dioxide Equivalent	16911.89	20338.68
Nitrogen Oxides	27.50	32.83
Sulfur Dioxide	29.00	34.62
Particulate Matter	16.50	19.70
Particulate Matter ≤ 10 microns	11.50	13.73
Particulate Matter ≤ 2.5 microns	5.49	6.56
Volatile Organic Compounds	16.00	19.10
Lead	0.01	0.01

4.2 Drum Dryer HAP and TAP Emissions

Hourly and annual potential emission rates of all federal, hazard air pollutants (HAPs) and state, toxic air pollutants (TAPs) from the drum dryer are presented in Appendix 4. Due to the large number of potential constituents, these tables have not been reproduced in this section of the permit application.

The emission rate calculations for HAPs and TAPs incorporate the same operational limits and assumptions (i.e., hourly, production rates, operational hours, and use of a baghouse) identified for criteria pollutant emission rates.

4.2 Asphalt Tank Heater

Potential emission rate estimates for the asphalt tank heater are based on the manufacturer's rated capacity of the burner. Emission factors used in these calculations were taken from Chapters 1 and 11.1 of AP-42, and many assumptions were required in order to quantify emission rates from this source. Although the assumptions that are considered to be the most relevant to permitting are discussed below, the spreadsheet calculations in Appendix 4 should be reviewed for complete documentation of all information and assumptions used in the emission calculations. The assumptions and other methodologies applied in these calculations are intended to represent very conservative, worst-case conditions with respect to the magnitude of the potential emission rates presented in this application.

Sulfur dioxide emissions estimates from the heater utilize fuel sulfur content information 1) from vendors for diesel and RFO, 2) from AP-42 for natural gas, and 3) from the Gas Processors Association for propane. Particulate matter, lead, and hydrochloric acid emission estimates for combustion of RFO also rely upon vendor's specifications. A copy of the RFO vendor's specifications is contained in Appendix 3 and these parameters are also identified in the calculation information contained in Appendix 4. The fuel characteristics may require permit limits to be considered federally-enforceable limits on the facility's potential to emit.

No control equipment is taken in account in the potential emission rate estimates presented for the heater. For annual emission rates, the calculations assume 8760 hours of operation per year (i.e., no operational constraints were used).

As with the drum dryer, emission estimates have been calculated for operation of the heater with diesel, RFO, natural gas, and propane. The worst case emission rate across all fuels was used as the basis for quantifying the potential emission rate of each regulated pollutant.

4.2.1 Asphalt Tank Heater Criteria Pollutants Emissions

Hourly and annual potential emission rates of all criteria pollutants from the heater are summarized in Table 4-2 below.

Table 4-2: Controlled Potential Criteria Emission Rates from the Asphalt Tank Heater

Pollutant	Hourly Emission Rate (lb/hr)	Annual Emission Rate (T/yr)
Carbon Monoxide	0.04	0.18
Carbon Dioxide Equivalent	100.30	439.33
Nitrogen Oxides	0.07	0.31
Sulfur Dioxide	0.19	0.84
Particulate Matter	0.20	0.88
Particulate Matter ≤ 10 microns	0.173	0.76
Particulate Matter ≤ 2.5 microns	0.006	0.03
Volatile Organic Compounds	0.01	0.02
Lead	0.00	0.01

4.2.2 Asphalt Tank Heater HAP and TAP Emissions

Hourly and annual potential emission rates of all HAPs and TAPs from the asphalt tank heater are presented in Appendix 4. These calculations incorporate the same operational limits and assumptions identified for criteria pollutant emission rates.

4.3 Generators

As was previously indicated, Western Construction will be utilizing two different generators when electrical power is otherwise unavailable onsite. These generators are referred to as the 'operations generator' and the 'night generator'. Both of the generators have Certified Tier 2 engines, per the terms of 40 CFR Part 89. Refer to the manufacturer's information contained in Appendix 3 for copies of EPA's Certificate of Conformity for each unit. Both units will be fired solely on No. 2 diesel fuel.

Emission factors for potential criteria pollutant emission rate calculations from the operations generator are largely taken from Table 1 of 40 CFR 89.112, for Tier 2 engines with a power rating greater than 560 kW. No emission factors for lead emissions from diesel combustion were identified during preparation of this permit application. Emission factors for sulfur dioxide, HAPs, and TAPs are taken from Chapter 3.4 of AP-42. Sulfur dioxide emissions estimates utilize a fuel sulfur content of 0.0015%, per the vendor's specifications for diesel fuel. All emissions estimates rely upon the manufacturer's gross engine output rating. No control equipment is accounted for in the potential emission estimates; however, annual operations were limited to 191 days per year and 13.5 hours of operation per day, for a total of 2578.5 hours of operations per year. Refer to the spreadsheet calculations presented in Appendix 4 for additional information on assumptions and calculation methodologies applied to operations generator emission estimates.

Emission factors for potential criteria emission rates from the night generator are generally taken from Table 1 of 40 CFR 89.112, for Tier 2 engines with a power rating between than 37 and 75 kW. Emission factors for sulfur dioxide, HAPs, and TAPs are taken from Chapter 3.3 of AP-42. Sulfur dioxide emissions estimates utilize fuel sulfur content information from vendor's specifications for diesel fuel. Emissions estimates rely upon the manufacturer's gross engine output rating. No control equipment will be used on the unit, and annual operations are assumed to be 8760 hours per year (i.e., no operational constraints are applied to potential

emission rate calculations). Appendix 4 contains complete information on all assumptions and calculation methodologies used for emission estimates from the night generator.

4.3.1 Generator Criteria Pollutants Emissions

Hourly and annual potential emission rates of all criteria pollutants from the generators are summarized in Table 4-3 below.

Table 4-3: Controlled Potential Criteria Emission Rates from the Generators

Pollutant	Operations Generator		Night Generator	
	Hourly Emission Rate (lb/hr)	Annual Emission Rate (T/yr)	Hourly Emission Rate (lb/hr)	Annual Emission Rate (T/yr)
Carbon Monoxide	6.90	8.90	0.55	2.41
Carbon Dioxide Equivalent	1387.43	1788.74	76.92	336.89
Nitrogen Oxides	12.60	16.24	0.83	3.62
Sulfur Dioxide	0.01	0.02	0.0004	0.002
Particulate Matter	0.39	0.51	0.04	0.19
Particulate Matter ≤ 10 microns	0.39	0.51	0.04	0.19
Particulate Matter ≤ 2.5 microns	0.47	0.60	0.04	0.19
Volatile Organic Compounds	2.56	3.30	0.17	0.74
Lead[1]	N/A	N/A	N/A	N/A

[1]No emission factors for lead emissions from diesel combustion were identified during preparation of the permit application.

4.3.2 Generator HAP and TAP Emissions

Hourly and annual potential emission rates of all HAPs and TAPs from the generators are presented in Appendix 4.

4.4 Storage Tanks

Western Construction will have three large storage tanks onsite that will have a potential to emit regulated air pollutants. These tanks will be used to store asphalt, diesel, and RFO for operations at the HMA plant. The diesel/RFO tank is actually a single tank with a partition that allows fuels to be stored separately in either end of the tank. The TANKS software (September 1999, Version 4.0) from Chapter 7 of AP-42 was used to quantify emissions from these sources, which are expressed as total organic compounds emitted per year, based on the annual throughput of each tank. Copies of the TANKS input and output files are contained in Appendix 4 of this application. No control equipment or limits in operational hours were applied to any emission rate estimates from the tanks, although the emission rate estimates are directly tied to the annual throughput of product stored in each tank.

For TANKS inputs for the asphalt tank, it was assumed that asphalt temperatures will fluctuate between 65 and 280°F, with an average temperature of 270°F. Vapor pressures and vapor molecular weight for asphalt were estimated from information presented in Chapter 11.1 of AP-42. Initial runs of the software assumed ten tank turnovers per year (i.e., 300,000 gallons of asphalt); however, the annual HMA production rate from the drum dryer was ultimately used to estimate the volume of asphalt binder that would be required (i.e., 10,989,643 gallons), and TOC emissions were then scaled upward to reflect the increase in tank throughput. The TANKS software was also re-run at the higher tank throughput, and the results confirm that scaling up

TOC emissions is a conservative calculation methodology. Refer to the spreadsheet calculations in Appendix 4 for complete documentation of all calculation methodologies and assumptions used to quantify TOC emission rates from the asphalt storage tank.

A similar methodology was used to quantify TOC emissions from the diesel and RFO storage tanks. These tanks are not heated, and software settings within the TANKS program were used to set the temperature ranges for liquids inside the tanks, based on a site location in Pocatello, Idaho (i.e., thought to closely approximate the average altitude in Idaho). As with the asphalt storage tank, initial runs of the TANKS software assumed ten tank turnovers per year for each tank. Potential annual throughputs were later determined by using the drum dryer burner and asphalt tank heater capacities to estimate the required fuel, and TOC emissions were subsequently scaled upward to reflect these estimates. It should be noted that there is some uncertainty in the estimated, annual diesel fuel usage, as fuel from this tank can also be used to refuel some equipment on the site (e.g., loaders, etc.); however, given the very low TOC emission rate (expressed as VOC for purposes of the permit application) this uncertainty is not expected to have a significant impact on the potential emission rate presented in this permit application.

The TOC emission rate from the heated asphalt storage tank was further speciated into emission rates of carbon monoxide, methane, and various HAPs or TAPs using speciation factors from Chapter 11.1 of AP-42. No such speciation factors were located for TOC emissions from diesel or RFO; however, given the low, overall TOC emission rates from these unheated storage tanks, it is expected that actual emissions of these constituents will be very minimal.

4.4.1 Storage Tank Criteria Pollutants Emissions

Carbon monoxide, carbon dioxide equivalent, and volatile organic compounds are the only criteria pollutants associated with the storage tanks. Table 4-4 contains hourly and annual potential emission rates from all three storage tanks, collectively. Emission estimates from each individual tank are presented in Appendix 4.

Table 4-4: Controlled Potential Criteria Emission Rates from Storage Tanks

Pollutant[1]	Hourly Emission Rate (lb/hr)	Annual Emission Rate (T/yr)
Carbon Monoxide (asphalt storage tank only)	0.03	0.03
Carbon Dioxide Equivalent (asphalt storage tank only)	0.02	0.02
Volatile Organic Compounds (all three storage tanks)	0.35	0.42

[1]Emission factors for asphalt, diesel, and RFO are limited to CO, certain green house gases, and VOCs. No other criteria pollutant emissions are expected to be emitted from the storage tanks.

4.4.2 Storage Tank HAP and TAP Emissions

Emission rates for HAPs and TAPs from the asphalt storage tank were quantified and can be found in Appendix 4 of this permit application.

4.5 Silo Filling

The HMA storage silos will have a quantifiable potential to emit regulated pollutants when being filled with HMA from the drum dryer. Freshly produced HMA will be conveyed to the top of the silos by the slat conveyer and dumped into the silo, producing air emissions from the top of the silos.

The methodology presented in Chapter 11.1 of AP-42 was used to quantify this emission source. Per the foot notes for Table 11.1-14, default values of -0.5 and 325°F were used for asphalt volatility and HMA temperature, respectively, to solve the emission factor equations. The emission factors were then multiplied by the maximum, hourly HMA production rate for the drum dryer (i.e., 500 T/hr) to quantify emission rate estimates. Consequently, the production rates identified for the drum dryer are also applicable to the HMA storage silos.

While conducting modeling assessments to estimate setback requirements, it was determined that emissions from silo filling operations contributed significantly to the setback distances obtained. This is thought to be due to the relatively low emissions rate velocity associated with this source. To increase the emissions rate velocity, and thereby reduce the required setback distance associated with this source, Western Construction has elected to capture this emission source with shrouds and ductwork and route it through the baghouse. Although it is likely that there will be some reduction in emission rates as a result of the control equipment, it must be noted that no emissions reductions were applied to estimates for silo filling operations as a result of routing this source to the baghouse. The estimates presented in Table 4-5 represent potential emissions rates based on the proposed, maximum annual HMA production rate (i.e., 1,193,750 T/year) with no reductions for use of the baghouse. This is considered to be a conservative approach to estimating emission rates, as well as modeling ambient impacts from such emission rate estimates.

Complete calculations with documentation of all assumptions and methodologies are presented in Appendix 4.

4.5.1 Silo Filling Criteria Pollutants Emissions

Table 4-5 summarizes all criteria pollutant emission rates from the HMA storage silos. Emission factors for nitrogen oxides, sulfur dioxide, and lead are not presented in AP-42, and no other source of information could be located during preparation of this permit application.

Table 4-5: Controlled Potential Criteria Emission Rates from the HMA Storage Silos

Pollutant[1]	Hourly Emission Rate (lb/hr)	Annual Emission Rate (T/yr)
Carbon Monoxide	0.59	0.70
Carbon Dioxide Equivalent	0.33	0.40
Particulate Matter	0.29	0.35
Particulate Matter ≤ 10 microns	0.29	0.35
Particulate Matter ≤ 2.5 microns	0.29	0.35
Volatile Organic Compounds	6.10	7.28

[1]Emission factors for asphalt storage silos are limited to CO, certain green house gases, particulate matter, and VOCs. No other criteria pollutant emissions are expected to be emitted from the silos.

4.5.2 Silo Filling HAP and TAP Emissions

Emission rates for HAP and TAP constituents were performed by applying speciation factors from Tables 11.1-15 and 11.1-16 of AP-42 to the VOC emission rates. Refer to Appendix 4 for a list of potential HAP/TAP emission rates from the HMA storage silos.

4.6 Truck Loadout

The HMA storage silos will also have a quantifiable potential to emit regulated pollutants when used to fill trucks with HMA from the silos. Stored HMA will be dropped into dump trucks beneath the silos through a hopper, producing air emissions from the bottom of the silos. The assumptions and calculation methodologies used to quantify emissions from truck loadout are the same as those used for HMA silo loading calculations. Emissions from truck loadout cannot reasonably be captured without considerable alteration of the facility, and consequently, these emissions will not be routed to the baghouse. Complete calculations with documentation of all assumptions and methodologies are presented in Appendix 4 of this application.

4.6.1 Truck Loadout Criteria Pollutants Emissions

Table 4-6 summarizes all criteria pollutant emission rates from the truck loadout operations at the HMA storage silos. Emission factors for nitrogen oxides, sulfur dioxide, and lead are not presented in AP-42, and no other source of information could be located during preparation of this permit application.

Table 4-6: Controlled Potential Criteria Emission Rates from Truck Loadout

Pollutant[1]	Hourly Emission Rate (lb/hr)	Annual Emission Rate (T/yr)
Carbon Monoxide	0.68	0.81
Carbon Dioxide Equivalent	2.84	3.39
Particulate Matter	0.26	0.31
Particulate Matter ≤ 10 microns	0.26	0.31
Particulate Matter ≤ 2.5 microns	0.26	0.31
Volatile Organic Compounds	1.96	2.33

[1]Emission factors for asphalt storage silos are limited to CO, certain green house gases, particulate matter, and VOCs. No other criteria pollutant emissions are expected to be emitted from the silos.

4.6.2 Truck Loadout HAP and TAP Emissions

Refer to Appendix 4 for potential HAP and TAP emission rates from truck loadout.

4.7 Aggregate Screening and Handling

Aggregate will be routinely moved and screened as part of the HMA plant operations. In order to quantify emissions associated with these activities, the emission factors and calculation methodologies in Chapters 11.19 and 13.2 of AP-42 were used. Refer to the spreadsheet in Appendix 4 for compete documentation of the calculation methodologies used for this permit application. There are no HAP or TAP emissions associated with aggregate handling.

For potential emission rate estimates associated with loading the cold feed bins by front-end loader, the methodology specified in AP-42 requires inputs of mean wind speed and moisture content of the aggregate. Per typical DEQ methodology, ten miles per hour was used as the mean wind speed. Per Western Construction's experience with hot plants, a moisture content of 5% was used. It should be noted that this value is commiserate with typical DEQ methodology, which recognizes a range of 3-7% moisture. Only one drop point was applied, as Western Construction will typically employ sites with an existing stockpile of aggregate onsite, prior to operation of the HMA plant. However, Western Construction requests that the PTC contain provisions allowing rock crushing operations to be conducted while the HMA plant is in operation if necessary.

Potential emission rate calculations for aggregate drop points during conveyance from the cold bins, to screening, to virgin conveyor, and into the drum dryer (i.e., 4 drop points) were calculated in accordance with the methodology presented in Chapter 11.19 of AP-42. Emission factors for controlled conveyor transfer points were used, as covers and/or other enclosures will be used to prevent fugitive emissions, per the requirements of IDAPA 58.01.01.808.01.

Potential emission rate calculations for aggregate screening were calculated in accordance with the methodology presented in Chapter 11.19 of AP-42. Western Construction will be using one screen for Hot Plant #2, and the emission factor for controlled screening was used, as covers and/or other enclosures will be used to prevent fugitive emissions, per the requirements of IDAPA 58.01.01.808.01.

4.7.1 Aggregate Screening and Handling Criteria Pollutants Emissions

Table 4-7 contains hourly and annual potential emission rates for aggregate handling and screening.

Table 4-7: Controlled Potential Criteria Emission Rates from Aggregate Handling and Screening

Pollutant[1]	Hourly Emission Rate (lb/hr)	Annual Emission Rate (T/yr)
Particulate Matter	2.92	3.47
Particulate Matter ≤ 10 microns	0.82	0.97
Particulate Matter ≤ 2.5 microns	0.10	0.13

[1]Particulate matter is the only criteria pollutant associated with aggregate handling and screening.

4.8 Facility-wide Emission Rates

Table 4-8 presents a summary of the uncontrolled, potential emissions rates of criteria pollutants associated with operation of the proposed HMA plant. These estimates do not use any of the control equipment or limits on hours of operation discussed in the preceding sections of this document, and are presented for informational purposes only. Appendix 4 contains a copy of the spreadsheets used to develop these estimates on a source-by-source basis, and also documents all references and assumptions used to quantify the emissions presented in the table below.

Table 4-8: Facility-wide, Uncontrolled Potential Emission Rates – Criteria Pollutants

Pollutant	Hourly Emission Rate (lb/hr)	Annual Emission Rate (T/yr)
Carbon Monoxide	73.79	323.19
Carbon Dioxide Equivalent	18479.71	81491.92
Nitrogen Oxides	41.00	179.57
Sulfur Dioxide	29.20	127.91
Particulate Matter	14001.19	61325.23
Particulate Matter ≤ 10 microns	3251.17	14240.11
Particulate Matter ≤ 2.5 microns	14138.57	61926.94
Volatile Organic Compounds	27.14	118.87
Lead	0.27	1.19

Table 4-9 presents facility-wide, potential criteria emission rates from the proposed facility, with control equipment and limits on hours of operation and/or production rates. The air control equipment and operational limits were discussed in the preceding sections of this application, and are required to keep the facility below major-source thresholds. These operational limits and constraints should be incorporated into the PTC to maintain federal enforceability on the facility's potential to emit.

Table 4-9: Facility-wide, Controlled Potential Emission Rates – Criteria Pollutants

Pollutant	Hourly Emission Rate (lb/hr)	Annual Emission Rate (T/yr)
Carbon Monoxide	73.79	90.63
Carbon Dioxide Equivalent	18479.73	22907.45
Nitrogen Oxides	41.00	53.00
Sulfur Dioxide	29.20	35.47
Particulate Matter	17.69	21.94
Particulate Matter ≤ 10 microns	12.67	15.85
Particulate Matter ≤ 2.5 microns	6.57	8.04
Volatile Organic Compounds	27.14	33.20
Lead	0.01	0.02

Tables 4-10 and 4-11 present controlled potential emission rates for non-carcinogenic and carcinogenic TAPs, respectively. As with the criteria pollutants estimates in Table 4-9, these potential emission rate estimates rely upon the air control equipment and operational limits discussed in the preceding sections of this permit application, and should be incorporated into the PTC to ensure federal enforceability. Uncontrolled, potential emission rates for all TAPs, facility-wide and specific to each emission unit, are contained in the spreadsheets in Appendix 4.

Table 4-10: Facility-wide, Controlled Potential Emission Rates – Non-Carcinogen TAPs

Pollutant	Hourly Emission Rate (lb/hr)	Annual Emission Rate (T/yr)
Acetone	4.19E-01	5.01E-01
Acrolein	1.31E-02	1.58E-02
Antimony	1.06E-04	1.78E-04
Barium	2.90E-03	3.47E-03
Bromomethane	5.12E-04	6.11E-04
Carbon Disulfide	1.29E-03	1.54E-03

Table 4-10: Facility-wide, Controlled Potential Emission Rates – Non-Carcinogen TAPs, Continued

Pollutant	Hourly Emission Rate (lb/hr)	Annual Emission Rate (T/yr)
Chloroethane/Ethyl chloride	2.59E-04	3.10E-04
Chloromethane/Methyl chloride	1.78E-03	2.12E-03
Chromium	3.39E-03	6.10E-03
Cobalt	3.16E-05	9.69E-05
Copper	1.55E-03	1.86E-03
Crotonaldehyde	4.30E-02	5.13E-02
Cumene	2.29E-03	2.73E-03
Dichlorobenzene	5.88E-07	2.58E-06
Ethyl Benzene	1.28E-01	1.53E-01
Heptane	4.70E+00	5.61E+00
Hexane	4.70E-01	5.64E-01
Hydrochloric Acid	1.29E-01	2.29E-01
Manganese	4.03E-03	5.38E-03
Mercury	1.30E-03	1.56E-03
Methyl Chloroform	2.40E-02	2.87E-02
Methyl Ethyl Ketone	1.35E-02	1.61E-02
Molybdenum	5.39E-07	2.36E-06
Naphthalene	3.31E-01	3.95E-01
n-Pentane	1.06E-01	1.31E-01
Phenol	2.01E-03	2.40E-03
Phosphorus	1.40E-02	1.67E-02
Propionaldehyde	6.50E-02	7.76E-02
Quinone	8.00E-02	9.55E-02
Selenium	1.83E-04	2.42E-04
Silver	2.40E-04	2.87E-04
Styrene	4.96E-04	5.92E-04
Thallium	2.05E-06	2.45E-06
Toluene	1.46E+00	1.74E+00
Valeraldehyde	3.35E-02	4.00E-02
Vanadium	1.13E-06	4.94E-06
Xylenes	1.28E-01	1.54E-01
Zinc	3.05E-02	3.65E-02

Table 4-11: Facility-wide, Controlled Potential Emission Rates – Carcinogen TAPs

Pollutant	Hourly Emission Rate (lb/hr)	Annual Emission Rate (T/yr)
Acenaphthene	1.78E-03	2.14E-03
Acenaphthylene	1.11E-02	1.33E-02
Acetaldehyde	6.51E-01	7.78E-01
Anthracene	1.85E-03	2.21E-03
Arsenic	4.94E-04	1.27E-03
Benzene	2.05E-01	2.47E-01
Benzo(a)pyrene	2.54E-05	7.63E-05
Benzo(g,h,i)perylene	2.81E-05	3.48E-05
Benzo(e)pyrene	8.04E-05	9.59E-05
Beryllium	6.43E-06	2.82E-05
Bis(2-ethylhexyl)phthalate	7.86E-06	3.44E-05
1,3-Butadiene	1.83E-05	8.03E-05

Table 4-11: Facility-wide, Potential Emission Rates – Carcinogen TAPs, Continued

Pollutant	Hourly Emission Rate (lb/hr)	Annual Emission Rate (T/yr)
Cadmium	2.48E-04	4.32E-04
Chloromethane/Methyl chloride	2.25E-04	2.69E-04
Hexavalent Chromium	6.08E-08	7.52E-08
Total Dioxin/Furans	6.18E-04	7.53E-04
Fluoranthene	8.22E-03	9.86E-03
Fluorene	1.60E+00	1.91E+00
Formaldehyde	8.82E-10	3.86E-09
3-Methylchloranthrene	1.72E-05	2.05E-05
Methylene Chloride/Dichloromethane	9.58E-02	1.14E-01
2-Methylnaphthalene	3.31E-01	3.95E-01
Naphthalene	3.21E-02	4.01E-02
Nickel	8.00E-05	9.55E-05
Perylene	1.55E-02	1.87E-02
Phenanthrene	9.24E-04	1.25E-03
POM	2.35E-03	2.81E-03
Pyrene	1.05E-10	1.25E-10
2,3,7,8-TCDD	1.60E-04	1.91E-04
Tetrachloroethene/ Tetrachloroethylene	0.00E+00	0.00E+00
Trichloroethene/ Trichloroethylene	2.25E-04	2.69E-04

Table 4-12 shows the controlled, potential emission rates for all HAPs from the proposed facility. No single constituent exceeds 10 T/yr, nor do the total, combined emission rates exceed 25 T/yr (i.e., the facility is not a major source for HAP emissions). It must be noted that the potential emission rate estimates presented in Table 4-12 rely upon the air control equipment and operational limits discussed in the preceding sections of this permit application, and must therefore be incorporated into the PTC to ensure federal enforceability. Uncontrolled, potential emission rates for all HAPs, facility-wide and specific to each emission unit, are contained in the spreadsheets in Appendix 4.

Table 4-12: Facility-wide, Potential Emission Rates – Federal HAPs

Pollutant	Hourly Emission Rate (lb/hr)	Annual Emission Rate (T/yr)
Acenaphthene	1.78E-03	2.14E-03
Acenaphthylene	1.11E-02	1.33E-02
Acetaldehyde	6.51E-01	7.78E-01
Acrolein	1.31E-02	1.58E-02
Antimony	1.06E-04	1.78E-04
Anthracene	1.85E-03	2.21E-03
Arsenic	4.94E-04	1.27E-03
Benzene	2.05E-01	2.47E-01
Benzo(a)anthracene	2.29E-04	3.22E-04
Benzo(a)pyrene	2.54E-05	7.63E-05
Benzo(b)fluoranthene	7.27E-05	8.89E-05
Benzo(e)pyrene	8.04E-05	9.59E-05
Benzo(g,h,i)perylene	2.81E-05	3.48E-05
Benzo(k)fluoranthene	2.62E-05	3.16E-05

Table 4-12: Facility-wide, Potential Emission Rates – Federal HAPs, Continued

Pollutant	Hourly Emission Rate (lb/hr)	Annual Emission Rate (T/yr)
Beryllium	6.43E-06	2.82E-05
Bis(2-ethylhexyl)phthalate	7.86E-06	3.44E-05
Bromomethane	5.12E-04	6.11E-04
1,3-Butadiene	1.83E-05	8.03E-05
Cadmium	2.48E-04	4.32E-04
Carbon Disulfide	1.29E-03	1.54E-03
Chloroethane/Ethyl Chloride	2.59E-04	3.10E-04
Chloromethane/Methyl chloride	1.78E-03	2.12E-03
Chromium	3.39E-03	6.10E-03
Hexavalent Chromium	2.25E-04	2.69E-04
Chrysene	5.60E-04	7.15E-04
Cobalt	3.16E-05	9.69E-05
Cumene	2.29E-03	2.73E-03
Dibenzo(a,h)anthracene	3.81E-06	5.70E-06
Dibutylphthalate	1.21E-07	5.32E-07
Dichlorobenzene	5.88E-07	2.58E-06
Ethyl Benzene	1.28E-01	1.53E-01
Fluoranthene	6.18E-04	7.53E-04
Fluorene	8.22E-03	9.86E-03
Formaldehyde	1.60E+00	1.91E+00
Hexane	4.70E-01	5.64E-01
HCl	1.29E-01	2.29E-01
Indeno(1,2,3-cd)pyrene	7.96E-06	1.04E-05
Lead	9.29E-03	1.68E-02
Manganese	4.03E-03	5.38E-03
Mercury	1.30E-03	1.56E-03
Methyl Chloroform	2.40E-02	2.87E-02
Methyl Ethyl Ketone	1.35E-02	1.61E-02
Methylene Chloride/Dichloromethane	1.72E-05	2.05E-05
2-Methylnaphthalene	9.58E-02	1.14E-01
3-Methylchloranthrene	1.18E-08	5.15E-08
Naphthalene	3.31E-01	3.95E-01
Nickel	3.21E-02	4.01E-02
Pentane	1.27E-03	5.58E-03
Perylene	8.00E-05	9.55E-05
Phenanthrene	1.55E-02	1.87E-02
Phenol	2.01E-03	2.40E-03
Phosphorus	1.40E-02	1.67E-02
POM	4.69E-01	5.61E-01
Propionaldehyde	6.50E-02	7.76E-02
Pyrene	2.35E-03	2.81E-03
Quinone	8.00E-02	9.55E-02
Selenium	1.83E-04	2.42E-04
Styrene	4.96E-04	5.92E-04
2,3,7,8-TCDD	1.05E-10	1.25E-10
Tetrachloroethene/ Tetrachloroethylene	1.60E-04	1.91E-04
Toluene	1.46E+00	1.74E+00

Table 4-12: Facility-wide, Potential Emission Rates – Federal HAPs, Continued

Pollutant	Hourly Emission Rate (lb/hr)	Annual Emission Rate (T/yr)
Total PCDD/PCDF	6.08E-08	7.52E-08
Trichloroethene/ Trichloroethylene	0.00E+00	0.00E+00
Xylene	1.28E-01	1.54E-01
TOTALS:	**5.51**	**6.68**

5. Modeling Assessment

AERMOD is identified as an approved air quality model for estimating ambient concentrations, and was utilized to determine the increase in ambient concentration for each criteria pollutant and for each TAP exceeding its applicable screening level (EL) listed in Sections 585 and 586 of the *Rules for the Control of Air Pollution in Idaho*.

A copy of the Air Quality Modeling Analysis conducted by Enviroscientists for this application is presented in Appendix 5. Input and output files for the modeling assessment, as well as a separate hard copy of the Analysis, have been submitted to DEQ as part of this permit application.

The results of the modeling exercise are presented in Appendix 5. The setbacks required to establish compliance with ambient air quality standards, at each of the four production rates requested for inclusion in the permit, is presented in Table 5-1.

Table 5-1: Maximum, Hourly Production Rates and Required Setback Distances

Maximum Production Rate (tons/hour)	Governing Pollutant/Standard	Setback Distance Required (feet)
500	24-hour $PM_{2.5}$	591
450	24-hour $PM_{2.5}$	532
400	24-hour $PM_{2.5}$	489
350	24-hour $PM_{2.5}$	430

As shown in Table 5-1, the 24-hour standard for particulate matter with an aerodynamic diameter of 2.5 microns or less resulted in the greatest setback requirement, with respect to compliance with ambient air quality standards. If these setbacks (i.e., at each hourly production rate) are maintained, the modeling assessment shows that compliance has been demonstrated with all applicable ambient air quality standards for both criteria pollutants and TAPs.

Based on the controlled, potential emission rates and modeling results contained in this permit application, ambient concentrations resulting from emissions from Hot Plant #2 comply with the *Rules for the Control of Air Pollution in Idaho*, and no further analysis is required.

6. TRACT Analysis

As indicated in the Air Quality Modeling Analysis in Appendix 5, several controlled TAP emission rates from the HMA plant were greater than the screening levels (ELs) specified at IDAPA

58.01.01.585 and 586. Per the requirements of IDAPA 58.01.01.210.04-08, TAPs that cannot be screened require modeling to quantify the ambient concentrations from the facility for a comparison against the applicable acceptable ambient concentrations listed in Sections 585 and 586. Refer to the Air Quality Modeling Analysis in Appendix 5 for additional details related to the modeling assessments performed for this facility. After modeling the controlled TAPs emissions from the facility, it was noted that several TAPs exceeded the acceptable ambient concentrations for carcinogens (AACCs) listed under Section 586. These TAPs included arsenic, benzo(a)pyrene, cadmium, fluorene, formaldehyde, 2-methylnaphthalene, naphthalene, phenanthrene, and nickel, which can loosely be categorized as carcinogenic metals (arsenic, cadmium, and nickel) or carcinogenic organics and acids (benzo(a)pyrene, fluorene, formaldehyde, 2-methyl-naphthalene, naphthalene, and phenanthrene). Per Section 210.12, Toxic Air Pollutant Reasonably Available Control Technology (TRACT) may be used to demonstrate pre-construction compliance for TAPs listed in Section 586. TRACT is determined on a case-by-case basis by DEQ, based on the process outlined in Section 210.14.

The TRACT determination involves an evaluation from DEQ regarding the technical and economic feasibility of various control technologies reasonably available for the control of specific carcinogenic species. As part of the TAPs assessment, DEQ's HMA permitting and modeling staff were consulted for direction and interpretation of the TRACT requirements in Section 210 of the *Rules for the Control of Air Pollution in Idaho*. During these discussions, DEQ indicated that the agency had made several TRACT determinations for TAPs from HMA plants in recent years and had a fairly standardized determination assessment for this particular source type. A review of DEQ permits shows TRACT determinations for several recent HMA plant PTCs, including Project Nos. 60870 (6/24/11), 60714 (3/25/11), 60715 (3/22/11), and 60625 (2/28/11). As part of preparing this permit application, Centra has reviewed the TRACT determinations associated with each of these projects and determined the following:

1) Fuel specifications and a baghouse have been accepted by DEQ as TRACT for carcinogenic metals emissions. Good combustion practices, good maintenance of control equipment (i.e., the baghouse), and the use of a covered conveyor from the drum dyer to the HMA silos have been accepted as TRACT for carcinogenic organics and acids. Additionally, the generators will be moved periodically, and qualify for the short-term adjustment factor allowed in Section 210.15.
2) These TRACT determinations were based on a review of potential control technologies that were considered to be reasonably available at the time of each determination. Centra has reviewed the potential control technologies evaluated as part of these TRACT determinations, and has determined that there are no new or additional reasonably-available control technologies that could be employed at Hot Plant #2.

Consequently, DEQ's previous TRACT determinations for carcinogenic TAPs from HMA plants are applicable to Western Construction's Hot Plant #2. It is proposed that the use of a baghouse on the drum dyer and HMA silo loading operations constitute TRACT for carcinogenic metal emissions, while good combustion practices, maintenance of the baghouse in accordance with manufacturer's specifications, and use of a covered conveyor from the drum dryer to the HMA silos constitute TRACT for carcinogenic organic and acid emissions.

7. Regulatory Assessment

This section of the permit application identifies and discusses other applicable state and federal standards.

7.1 Idaho Standards

7.1.1 Visible Emissions (IDAPA 58.01.01.625)

Western Construction's proposed HMA plant will be subject to the opacity standards contained at IDAPA 58.01.01.625. This standard requires that no emissions from any point of emissions exceed 20% opacity for a period or periods aggregating more than three minutes in any 60-minute period.

Western Construction will ensure compliance with this standard by ensuring that proper combustion techniques are used at the proposed HMA plant and visually monitoring emissions to assess any compliance issues.

7.1.2 Rules for the Control of Fugitive Dust (IDAPA 58.01.01.650-651)

Western Construction's proposed HMA plant will be subject to the standards for control of fugitive dust contained at IDAPA 58.01.01.650-651. This standard requires that all reasonable precautions be taken to prevent the generation of fugitive dust.

Western Construction will take all reasonable precautions to prevent fugitive dust generation, including but not limited to the use of water trucks and covers over aggregate handling and conveyance mechanisms. Other measures may be implemented, as deemed necessary to ensure compliance with the standard, based on actual site operations and conditions.

7.1.3 Fuel Burning Equipment (IDAPA 58.01.01.675-681)

The standards at IDAPA 58.01.01.676 and 677 establish grain loading limits on fuel burning equipment that are applicable to the drum dryer, asphalt tank heater, and generators proposed for use at the HMA plant. For gaseous fuels, no more than 0.015 grains per dry standard cubic foot (gr/dscf) can be emitted, and for liquid fuels, no more than 0.050 gr/dscf can be emitted. All gas volumes must be corrected to 3% oxygen concentration.

According to AP-42, Table 1.4-2, approximately 7.6 pounds of particulate is generated per million cubic feet (lb/MMscf) of natural gas combusted. Table 19-2 in 40 CFR 60, Appendix A, Method 19, indicates that approximately 8710 dscf of flue gas at standard conditions (i.e., 68°F, 29.92 inches of mercury) is created per MMBTU of natural gas combusted. This data is used in the following steps to demonstrate that particulate emissions from the combustion of natural gas will always be less than the grain loading standard of 0.015 gr/dscf.

1) Correct for altitude, per IDAPA 58.01.01.680. For an altitude of 4465 feet at Pocatello (www.wunderground.com), subtract 0.10 x 44.65 = 4.465 inches of mercury from standard atmospheric pressure at sea level:

   29.92 inches Hg – 4.465 inches Hg = 25.46 inches Hg

2) Correct flue gas volume using the Ideal Gas Law:

   $$V2 = (P1*V1)/P2$$

   where,
   V2 = the gas volume corrected for altitude
   V1 = the known gas volume (8710 dscf)
   P1 = the pressure of the known gas volume (29.92 inches Hg)
   P2 = the pressure of the corrected gas volume (25.46 inches Hg).

   The altitude corrected volume of the flue gas is 10238 dscf.

3) Correct to 3% oxygen using Equation 19.1, as presented in 40 CFR 60, Appendix A, Method 19:

   $$F2 = F1*(20.9/20.9-3.0)$$

   where,
   F2 = the gas volume corrected to 3% oxygen,
   F1 = the altitude corrected flue gas volume (10238 dscf)

   The oxygen and altitude corrected volume of the flue gas is 11,954 dscf/MMBTU of natural gas combusted.

4) Determine the volume of flue gas created by combustion of one million cubic feet of natural gas, using corrected volume of flue gas per MMBTU of natural gas and the average gross heating value of natural gas presented in Chapter 1.4 of AP-42:

   (1,020 BTU/scf)*(11,954 dscf/MMBTU) = 0.000012 dscf flue gas/scf of natural gas
   = 12.2 dscf flue gas/MMscf of natural gas

5) Determine the grain loading per cubic foot of flue gas, based on emission factor for particulate matter (i.e., 7.6 lb/MMscf) from AP-42:

   (7.6 lb PM/MMscf*7,000 gr/lb)/12.2 dscf/MMscf = 0.004 gr/dscf < 0.015 gr/dscf

Emission factors given in AP-42 are generally accepted as conservative estimates. Even a conservative estimate of emissions from natural gas combustion results in an approximated grain loading well below the standard of 0.015 gr/dscf. Therefore, natural gas combustion should always be in compliance with the grain loading standard for gaseous fuels.

The procedure outlined above was also used to assess the grain loading standard against combustion of LPG. According to Table 19-2 in 40 CFR 60, Appendix A, Method 19, approximately 8710 dscf of flue gas at standard conditions is created per MMBTU of propane (i.e., LPG is commercial-grade propane) combusted. Based on information in Table 1.5-1 of AP-42, a heating value of 91.5 MMBTU/100 gallons of LPG and a particulate matter emission factor of 0.7 lb/1000 gallons of LPG were used in the calculations. Following the same general methodologies used for assessing natural gas combustion, the calculation for LPG combustion indicates that 0.0045 gr/dscf will be emitted. While LPG is stored and shipped in a liquid form, it is converted to a gaseous form immediately prior to combustion, and therefore, appears to be subject to the gaseous grain loading standard. However, it should be noted that the calculation for LPG combustion shows compliance with the grain loading standards for both gaseous and liquid fuels.

The procedure used to assess grain loading for natural gas and LPG combustion was followed for diesel combustion. Table 19-2 in 40 CFR 60, Appendix A, Method 19, indicates that approximately 9,190 dscf of flue gas at standard conditions is created per MMBTU of diesel combusted. Appendix A of AP-42 presents a heating value of 140 MMBTU/1000 gallons of diesel, while Table 1.3-6 contains a particulate matter emission factor of 2.0 lb/1000 gallons of diesel. Following the same general methodologies used for assessing natural gas and LPG combustion, the calculation for diesel combustion indicates that 0.008 gr/dscf will be emitted. This indicates that, with proper combustion techniques, the use of diesel will be in compliance with the grain loading standard for liquid fuels.

Finally, the procedure used for other fuels was applied to RFO combustion; however, due to a lack of reliable information regarding the volume of flue gas produced from RFO, the results cannot be used to demonstrate compliance with the grain loading standard for liquid fuels. Western Construction has only proposed operation of the drum dryer and the asphalt tank heater on RFO, and has subsequently indicated that its use in the asphalt tank heater is unlikely to occur due to concerns over the potential for undesired impacts to operation of the unit. Consequently, in order to demonstrate compliance with this standard, it is proposed that source testing be used to demonstrate compliance for both of these sources. The drum dryer must be tested under the New Source Performance Standard (NSPS) requirements (refer to Section 7.2.1 for a discussion of the NSPS requirements), and this test can also be used to show compliance with the grain loading standard. For the asphalt tank heater, it is requested that the PTC contain a provision requiring source testing prior to the use of RFO. These measures should be sufficient to demonstrate compliance with the grain loading standard for liquid fuels.

7.1.4 Process Weight Limitations (IDAPA 58.01.01.700-703)

The process weight rate standard in IDAPA 58.01.01.701 applies to the drum dryer proposed for use at the HMA plant. The potential throughput of the dryer is 500 T/hr, which is equivalent to 1,000,000 lbs/hr. Using this throughput in the equation in Section 701.01.b, the allowable particulate matter emission rate is 34.79 lb/hr. As is presented in Table 4-1 of this document, the controlled, potential particulate matter emissions rate of

the drum dryer is 16.5 lb/hr. Consequently, the drum dryer will be always be in compliance with the process rate weight standard if the baghouse is in operation. As was noted Section 4.1.1, the PTC should include operation of the baghouse to ensure that it is a federally-enforceable condition that limits the potential emissions rate of the drum dryer.

The process weight rate standard for new facilities also applies to the HMA storage silos. The potential throughput of these units is the same as that of the drum dryer, and the resulting particulate matter emission rate is also 35.62 lb/hr for the silos. Summing the potential, hourly emissions rate for both silo filling and truck loadout at these units (i.e., worst-case emission scenario) results in a total particulate matter emissions rate of 0.55 lb/hr, showing that these units will always satisfy the process weight rate limit.

Finally, the aggregate handling and screening process used at the proposed facility would also be subject to this requirement. The potential throughput at these units is 480 T/hr, or 960,000 lb/hr, which results in a process weight rate limit of 34.43 lb/hr for particulate. The estimated, potential emissions rate for all of these processes was 2.92 pounds of particulate matter per hour (refer to Section 4.7 of this application), which demonstrates compliance with the process weight rate standard.

7.1.5 Sulfur Content of Fuels (IDAPA 58.01.01.725)

This section of Idaho's Rules limits the sulfur content of various fuels. Section 725.03 limits the sulfur content of No. 2 fuel oil to 0.5%. Western Construction has proposed to use this fuel in the drum dryer, asphalt tank heater, and generators and is therefore, subject to the sulfur content standard; however, Western Construction will only use a No. 2 diesel fuel with a sulfur content of 0.0015% or less. This sulfur content was also used as the basis for potential emissions rates of sulfur dioxide from the asphalt tank heater and generators. Consequently, the proposed fuel sulfur content should be incorporated into the PTC as a permit limit, which will also ensure compliance with the provisions of IDAPA 58.01.01.725.

7.1.6 Rules for Control of Odors (IDAPA 58.01.01.775-776)

Section 776 restricts the emission of odorous gases, and is applicable to the proposed HMA plant. Western Construction will continuously monitor operations to ensure compliance with this provision. If odors are noted, or if any odor complaints are received, Western Construction will take corrective actions as necessary to mitigate such issues.

7.1.7 Rules for Control of Hot-Mix Asphalt Plants (IDAPA 58.01.01.805-808)

These provisions restrict the emissions of particulate matter from HMA plants, by 1) requiring compliance with the process weight rate limits of IDAPA 58.01.01.700-703, and 2) establishing fugitive emissions controls for the HMA plant and plant property. These provisions are applicable to the proposed HMA plant.

Compliance with the process weight limits is discussed in Section 7.1.4 of this permit application, while compliance with the fugitive emissions control requirements is

discussed in Section 7.1.2. These measures should be sufficient to ensure compliance with IDAPA 58.01.01.805-808.

7.2 New Source Performance Standards

7.2.1 Subpart I—Standards of Performance for Hot Mix Asphalt Facilities (40 CFR 60.90-93)

From Subpart I:

"60.90 Applicability and designation of affected facility.

(a) The affected facility to which the provisions of this subpart apply is each hot mix asphalt facility. For the purpose of this subpart, a hot mix asphalt facility is comprised only of any combination of the following: dryers; systems for screening, handling, storing, and weighing hot aggregate; systems for loading, transferring, and storing mineral filler, systems for mixing hot mix asphalt; and the loading, transfer, and storage systems associated with emission control systems.

(b) Any facility under paragraph (a) of this section that commences construction or modification after June 11, 1973, is subject to the requirements of this subpart.

60.91 Definitions.
As used in this subpart, all terms not defined herein shall have the meaning given them in the Act and in subpart A of this part.

(a) Hot mix asphalt facility means any facility, as described in §60.90, used to manufacture hot mix asphalt by heating and drying aggregate and mixing with asphalt cements."

Based on the applicability criteria and definitions in 40 CFR 90-91, the HMA plant proposed for construction by Western Construction will be subject to the provisions of Subpart I. This subpart contains particulate matter emission and opacity standards as follows:

"60.92 Standard for particulate matter.
(a) On and after the date on which the performance test required to be conducted by §60.8 is completed, no owner or operator subject to the provisions of this subpart shall discharge or cause the discharge into the atmosphere from any affected facility any gases which:

(1) Contain particulate matter in excess of 90 mg/dscm (0.04 gr/dscf).

(2) Exhibit 20 percent opacity, or greater."

Western Construction's proposed HMA plant will be subject to these emissions standards. Compliance with the standards requires performance testing as follows:

"60.93 Test methods and procedures.
(a) In conducting the performance tests required in §60.8, the owner or operator shall use as reference methods and procedures the test methods in appendix A of this part or other methods and procedures as specified in this section, except as provided in §60.8(b).

(b) The owner or operator shall determine compliance with the particulate matter standards in §60.92 as follows:

(1) Method 5 shall be used to determine the particulate matter concentration. The sampling time and sample volume for each run shall be at least 60 minutes and 0.90 dscm (31.8 dscf).

(2) Method 9 and the procedures in §60.11 shall be used to determine opacity."

Per the requirements of 40 CFR 60.8 (i.e., Appendix A of 40 CFR 60), Western Construction will complete the required performance testing within 60 days after achieving the maximum production rate at which the proposed facility will be operated, but not later than 180 days after initial startup. Western Construction will comply with all other applicable performance testing requirements identified in Appendix A and/or contained in the PTC issued for the proposed facility. Western Construction requests that the PTC specifically allow for a 60-day deadline for submission of the test report, to allow for sufficient time to prepare the report after the source testing has been completed.

7.2.2 Subpart Kb—Standards of Performance for Volatile Organic Liquid Storage Vessels (Including Petroleum Liquid Storage Vessels) for Which Construction, Reconstruction, or Modification Commenced After July 23, 1984 (40 CFR 60.110b-60.117b

From Subpart Kb:

"60.110b Applicability and designation of affected facility.
(a) Except as provided in paragraph (b) of this section, the affected facility to which this subpart applies is each storage vessel with a capacity greater than or equal to 75 cubic meters (m3) that is used to store volatile organic liquids (VOL) for which construction, reconstruction, or modification is commenced after July 23, 1984.

(b) This subpart does not apply to storage vessels with a capacity greater than or equal to 151 m3 storing a liquid with a maximum true vapor pressure less than 3.5 kilopascals (kPa) or with a capacity greater than or equal to 75 m3 but less than 151 m3 storing a liquid with a maximum true vapor pressure less than 15.0 kPa."

Per the minimum tank capacity in paragraph (a) of 40 CFR 60.110b, the RFO and diesel storages tanks (i.e., 15,000 and 6,000 gallons, respectively) for the proposed HMA plant are not subject to Subpart Kb.

The asphalt storage tank has a capacity of 30,000 gallons (i.e., 114 m^3). The maximum vapor pressure of the asphalt stored in the tank was estimated at 0.0052 psia, or 0.036 kPa, by the TANKS software used to estimate emissions from the tank. Refer to Section 4.4 of this application for a discussion of the TANKS software, and Appendix 4 for a copy of the input and output files. Per the tank capacities and maximum true vapor pressures in paragraph (b) of 40 CFR 60.110b, the asphalt storage tank is not subject to the provisions of Subpart Kb.

7.2.3 Subpart IIII—Standards of Performance for Stationary Compression Ignition Internal Combustion Engines (40 CFR 4200-4219)

From Subpart IIII:

"60.4200 Am I subject to this subpart?
(a) The provisions of this subpart are applicable to manufacturers, owners, and operators of stationary compression ignition (CI) internal combustion engines (ICE) and other persons as specified in paragraphs (a)(1) through (4) of this section. For the purposes of this subpart, the date that construction commences is the date the engine is ordered by the owner or operator.

(1) Manufacturers of stationary CI ICE with a displacement of less than 30 liters per cylinder where the model year is:

(i) 2007 or later, for engines that are not fire pump engines;

(ii) The model year listed in Table 3 to this subpart or later model year, for fire pump engines.

(2) Owners and operators of stationary CI ICE that commence construction after July 11, 2005, where the stationary CI ICE are:

(i) Manufactured after April 1, 2006, and are not fire pump engines, or

(ii) Manufactured as a certified National Fire Protection Association (NFPA) fire pump engine after July 1, 2006.

(3) Owners and operators of any stationary CI ICE that are modified or reconstructed after July 11, 2005 and any person that modifies or reconstructs any stationary CI ICE after July 11, 2005.

(4) The provisions of §60.4208 of this subpart are applicable to all owners and operators of stationary CI ICE that commence construction after July 11, 2005.

(b) The provisions of this subpart are not applicable to stationary CI ICE being tested at a stationary CI ICE test cell/stand.

(c) If you are an owner or operator of an area source subject to this subpart, you are exempt from the obligation to obtain a permit under 40 CFR part 70 or 40 CFR part 71, provided you are not required to obtain a permit under 40 CFR 70.3(a) or 40 CFR 71.3(a) for a reason other than your status as an area source under this subpart. Notwithstanding the previous sentence, you must continue to comply with the provisions of this subpart applicable to area sources.

(d) Stationary CI ICE may be eligible for exemption from the requirements of this subpart as described in 40 CFR part 1068, subpart C (or the exemptions described in 40 CFR part 89, subpart J and 40 CFR part 94, subpart J, for engines that would need to be certified to standards in those parts), except that owners and operators, as well as manufacturers, may be eligible to request an exemption for national security.

(e) Owners and operators of facilities with CI ICE that are acting as temporary replacement units and that are located at a stationary source for less than 1 year and that have been properly certified as meeting the standards that would be applicable to such engine under the appropriate nonroad engine provisions, are not required to meet any other provisions under this subpart with regard to such engines."

The engines in both generators were manufactured after April 1, 2006, and are therefore subject to the provisions of Subpart IIII.

"60.4201 What emission standards must I meet for non-emergency engines if I am a stationary CI internal combustion engine manufacturer?"

Western Construction is not an engine manufacturer and is therefore not subject to these requirements.

"60.4202 What emission standards must I meet for emergency engines if I am a stationary CI internal combustion engine manufacturer?"

Western Construction is not an engine manufacturer and is therefore not subject to these requirements.

"60.4203 How long must my engines meet the emission standards if I am a manufacturer of stationary CI internal combustion engines?"

Western Construction is not an engine manufacturer and is therefore not subject to these requirements.

"60.4204 What emission standards must I meet for non-emergency engines if I am an owner or operator of a stationary CI internal combustion engine?

(a) Owners and operators of pre-2007 model year non-emergency stationary CI ICE with a displacement of less than 10 liters per cylinder must comply with the emission standards in table 1 to this subpart. Owners and operators of pre-2007 model year non-emergency stationary CI ICE with a displacement of greater than or equal to 10 liters per cylinder and less than 30 liters per cylinder must comply with the emission standards in 40 CFR 94.8(a)(1).

(b) Owners and operators of 2007 model year and later non-emergency stationary CI ICE with a displacement of less than 30 liters per cylinder must comply with the emission standards for new CI engines in §60.4201 for their 2007 model year and later stationary CI ICE, as applicable.

(c) Owners and operators of non-emergency stationary CI engines with a displacement of greater than or equal to 30 liters per cylinder must meet the following requirements:

(1) For engines installed prior to January 1, 2012, limit the emissions of NOX in the stationary CI internal combustion engine exhaust to the following:

(i) 17.0 grams per kilowatt-hour (g/KW-hr) (12.7 grams per horsepower-hr (g/HP-hr)) when maximum engine speed is less than 130 revolutions per minute (rpm);

(ii) 45 · n−0.2g/KW-hr (34 · n−0.2g/HP-hr) when maximum engine speed is 130 or more but less than 2,000 rpm, where n is maximum engine speed; and

(iii) 9.8 g/KW-hr (7.3 g/HP-hr) when maximum engine speed is 2,000 rpm or more.

(2) For engines installed on or after January 1, 2012 and before January 1, 2016, limit the emissions of NOX in the stationary CI internal combustion engine exhaust to the following:

(i) 14.4 g/KW-hr (10.7 g/HP-hr) when maximum engine speed is less than 130 rpm;

(ii) 44 · n−0.23g/KW-hr (33 · n−0.23g/HP-hr) when maximum engine speed is greater than or equal to 130 but less than 2,000 rpm and where n is maximum engine speed; and

(iii) 7.7 g/KW-hr (5.7 g/HP-hr) when maximum engine speed is greater than or equal to 2,000 rpm.

(3) For engines installed on or after January 1, 2016, limit the emissions of NOX in the stationary CI internal combustion engine exhaust to the following:

(i) 3.4 g/KW-hr (2.5 g/HP-hr) when maximum engine speed is less than 130 rpm;

(ii) 9.0 · n−0.20g/KW-hr (6.7 · n−0.20g/HP-hr) where n (maximum engine speed) is 130 or more but less than 2,000 rpm; and

(iii) 2.0 g/KW-hr (1.5 g/HP-hr) where maximum engine speed is greater than or equal to 2,000 rpm.

(4) Reduce particulate matter (PM) emissions by 60 percent or more, or limit the emissions of PM in the stationary CI internal combustion engine exhaust to 0.15 g/KW-hr (0.11 g/HP-hr).

(d) Owners and operators of non-emergency stationary CI ICE with a displacement of less than 30 liters per cylinder who conduct performance tests in-use must meet the not-to-exceed (NTE) standards as indicated in §60.4212.

(e) Owners and operators of any modified or reconstructed non-emergency stationary CI ICE subject to this subpart must meet the emission standards applicable to the model year, maximum engine power, and displacement of the modified or reconstructed non-emergency stationary CI ICE that are specified in paragraphs (a) through (d) of this section."

The night generator engine was manufactured in 2007 and has a displacement of 4.5 liters per cylinder. Per the requirements of 40 CFR 60.4204(b), the night generator engine is subject to the emission standards for new CI engines in §60.4201 for their 2007 model year and later stationary CI ICE, as applicable. The gross engine output of this unit is 67 hp; therefore, per the requirements of §60.4201(b), the emission standard for this unit is 9.2 grams of nitrogen oxides (NO_x) per kilowatt-hour (9.2 g/kW-hr).

The operations generator was manufactured in 2011 and has a displacement of 30.5 liters per cylinder. The following emission standards apply to this unit:

1) Per 40 CFR 60.4204(c)(2), NO_x emissions must meet the following standards:
   - 14.4 g/KW-hr when maximum engine speed is less than 130 rpm;
   - $44 \cdot n^{-0.23}$g/KW-hr when maximum engine speed is greater than or equal to 130 but less than 2,000 rpm and where n is maximum engine speed; and
   - 7.7 g/KW-hr when maximum engine speed is greater than or equal to 2,000 rpm.
2) Per 40 CFR 60.4204(c)(4), reduce particulate matter (PM) emissions by 60 percent or more, or limit the emissions of PM in the stationary CI internal combustion engine exhaust to 0.15 g/KW-hr.

"60.4205 What emission standards must I meet for emergency engines if I am an owner or operator of a stationary CI internal combustion engine?"

Western Construction is not operating either generator engine as an emergency generator, and is therefore not subject to these requirements.

"60.4206 How long must I meet the emission standards if I am an owner or operator of a stationary CI internal combustion engine?

Owners and operators of stationary CI ICE must operate and maintain stationary CI ICE that achieve the emission standards as required in §§60.4204 and 60.4205 over the entire life of the engine."

The two generator engines must achieve the engine standards from §60.4204 for the entire life of each engine.

"60.4207 What fuel requirements must I meet if I am an owner or operator of a stationary CI internal combustion engine subject to this subpart?
(a) Beginning October 1, 2007, owners and operators of stationary CI ICE subject to this subpart that use diesel fuel must use diesel fuel that meets the requirements of 40 CFR 80.510(a).

(b) Beginning October 1, 2010, owners and operators of stationary CI ICE subject to this subpart with a displacement of less than 30 liters per cylinder that use diesel fuel must purchase diesel fuel that meets the requirements of 40 CFR 80.510(b) for nonroad diesel fuel.

(c) [Reserved]

(d) Beginning June 1, 2012, owners and operators of stationary CI ICE subject to this subpart with a displacement of greater than or equal to 30 liters per cylinder are no longer subject to the requirements of paragraph (a) of this section, and must use fuel that meets a maximum per-gallon sulfur content of 1,000 parts per million (ppm).

(e) Stationary CI ICE that have a national security exemption under §60.4200(d) are also exempt from the fuel requirements in this section."

The night generator must operate on diesel fuel meeting the requirements of 40 CFR 80.510(b) for nonroad diesel fuel. The operations generator must use fuel with a maximum per-gallon sulfur content of 1,000 ppm.

"60.4208 What is the deadline for importing or installing stationary CI ICE produced in previous model years?
(a) After December 31, 2008, owners and operators may not install stationary CI ICE (excluding fire pump engines) that do not meet the applicable requirements for 2007 model year engines.

(b) After December 31, 2009, owners and operators may not install stationary CI ICE with a maximum engine power of less than 19 KW (25 HP) (excluding fire pump engines) that do not meet the applicable requirements for 2008 model year engines.

(c) After December 31, 2014, owners and operators may not install non-emergency stationary CI ICE with a maximum engine power of greater than or equal to 19 KW (25 HP) and less than 56 KW (75 HP) that do not meet the applicable requirements for 2013 model year non-emergency engines.

(d) After December 31, 2013, owners and operators may not install non-emergency stationary CI ICE with a maximum engine power of greater than or equal to 56 KW (75 HP) and less than 130 KW (175 HP) that do not meet the applicable requirements for 2012 model year non-emergency engines.

(e) After December 31, 2012, owners and operators may not install non-emergency stationary CI ICE with a maximum engine power of greater than or equal to 130 KW (175 HP), including those above 560 KW (750 HP), that do not meet the applicable requirements for 2011 model year non-emergency engines.

(f) After December 31, 2016, owners and operators may not install non-emergency stationary CI ICE with a maximum engine power of greater than or equal to 560 KW (750 HP) that do not meet the applicable requirements for 2015 model year non-emergency engines.

(g) After December 31, 2018, owners and operators may not install non-emergency stationary CI ICE with a maximum engine power greater than or equal to 600 KW (804 HP) and less than 2,000 KW (2,680 HP) and a displacement of greater than or equal to 10 liters per cylinder and less than 30 liters per cylinder that do not meet the applicable requirements for 2017 model year non-emergency engines.

(h) In addition to the requirements specified in §§60.4201, 60.4202, 60.4204, and 60.4205, it is prohibited to import stationary CI ICE with a displacement of less than 30 liters per cylinder that do not meet the applicable requirements specified in paragraphs (a) through (g) of this section after the dates specified in paragraphs (a) through (g) of this section.

(i) The requirements of this section do not apply to owners or operators of stationary CI ICE that have been modified, reconstructed, and do not apply to engines that were removed from one existing location and reinstalled at a new location."

Both generator engines meet the applicable requirements for 2007 model year engines, and comply with 40 CFR 60.4208(a). Neither generator engine has a maximum engine power of less than 19 kW; therefore, both engines comply with 40 CFR 60.4208(b). The provisions of 40 CFR 60.4208(c)-(g) have not been triggered and do not apply to the generator engines.

"60.4209 What are the monitoring requirements if I am an owner or operator of a stationary CI internal combustion engine?
If you are an owner or operator, you must meet the monitoring requirements of this section. In addition, you must also meet the monitoring requirements specified in §60.4211.

(a) If you are an owner or operator of an emergency stationary CI internal combustion engine that does not meet the standards applicable to non-emergency engines, you must install a non-resettable hour meter prior to startup of the engine."

The generator engines are not emergency engines, and this provision does not apply to them.

"(b) If you are an owner or operator of a stationary CI internal combustion engine equipped with a diesel particulate filter to comply with the emission standards in §60.4204, the diesel particulate filter must be installed with a backpressure monitor that notifies the owner or operator when the high backpressure limit of the engine is approached."

The operations generator is not equipped with a diesel particulate filter, and this provision does not apply.

"60.4210 What are my compliance requirements if I am a stationary CI internal combustion engine manufacturer?"

Western Construction is not an engine manufacturer and is therefore not subject to these requirements.

"60.4211 What are my compliance requirements if I am an owner or operator of a stationary CI internal combustion engine?
(a) If you are an owner or operator and must comply with the emission standards specified in this subpart, you must do all of the following, except as permitted under paragraph (g) of this section:

(1) Operate and maintain the stationary CI internal combustion engine and control device according to the manufacturer's emission-related written instructions;

(2) Change only those emission-related settings that are permitted by the manufacturer; and

(3) Meet the requirements of 40 CFR parts 89, 94 and/or 1068, as they apply to you."

Western Construction is required to comply with the provisions of 40 CFR 60.4211(a)(1)-(3).

"(b) If you are an owner or operator of a pre-2007 model year stationary CI internal combustion engine and must comply with the emission standards specified in §§60.4204(a) or 60.4205(a), or if you are an owner or operator of a CI fire pump engine that is manufactured prior to the model years in table 3 to this subpart and must comply with the emission standards specified in §60.4205(c), you must demonstrate compliance according to one of the methods specified in paragraphs (b)(1) through (5) of this section.

(1) Purchasing an engine certified according to 40 CFR part 89 or 40 CFR part 94, as applicable, for the same model year and maximum engine power. The engine must be installed and configured according to the manufacturer's specifications.

(2) Keeping records of performance test results for each pollutant for a test conducted on a similar engine. The test must have been conducted using the same methods specified in this subpart and these methods must have been followed correctly.

(3) Keeping records of engine manufacturer data indicating compliance with the standards.

(4) Keeping records of control device vendor data indicating compliance with the standards.

(5) Conducting an initial performance test to demonstrate compliance with the emission standards according to the requirements specified in §60.4212, as applicable."

Neither generator engine is a pre-2007 model year stationary CI internal combustion engine that must comply with the emission standards specified in §§60.4204(a) or 60.4205(a), nor a fire pump engine; therefore, these requirements do not apply.

"(c) If you are an owner or operator of a 2007 model year and later stationary CI internal combustion engine and must comply with the emission standards specified in §60.4204(b) or §60.4205(b), or if you are an owner or operator of a CI fire pump engine that is manufactured during or after the model year that applies to your fire pump engine power rating in table 3 to this subpart and must comply with the emission standards specified in §60.4205(c), you must comply by purchasing an engine certified to the emission standards in §60.4204(b), or §60.4205(b) or (c), as applicable, for the same model year and maximum (or in the case of fire pumps, NFPA nameplate) engine power. The engine must be installed and configured according to the manufacturer's emission-related specifications, except as permitted in paragraph (g) of this section."

The night generator engine is required to comply with the emission standards in 40 CFR 60.4204(b), and must comply with this provision.

"(d) If you are an owner or operator and must comply with the emission standards specified in §60.4204(c) or §60.4205(d), you must demonstrate compliance according to the requirements specified in paragraphs (d)(1) through (3) of this section.

(1) Conducting an initial performance test to demonstrate initial compliance with the emission standards as specified in §60.4213.

(2) Establishing operating parameters to be monitored continuously to ensure the stationary internal combustion engine continues to meet the emission standards. The owner or operator must petition the Administrator for approval of operating parameters to

be monitored continuously. The petition must include the information described in paragraphs (d)(2)(i) through (v) of this section.

(i) Identification of the specific parameters you propose to monitor continuously;

(ii) A discussion of the relationship between these parameters and NOX and PM emissions, identifying how the emissions of these pollutants change with changes in these parameters, and how limitations on these parameters will serve to limit NOX and PM emissions;

(iii) A discussion of how you will establish the upper and/or lower values for these parameters which will establish the limits on these parameters in the operating limitations;

(iv) A discussion identifying the methods and the instruments you will use to monitor these parameters, as well as the relative accuracy and precision of these methods and instruments; and

(v) A discussion identifying the frequency and methods for recalibrating the instruments you will use for monitoring these parameters.

(3) For non-emergency engines with a displacement of greater than or equal to 30 liters per cylinder, conducting annual performance tests to demonstrate continuous compliance with the emission standards as specified in §60.4213."

The operations generator engine is required to comply with emission standards in 40 CFR 60.4204(c), and must comply with these provisions, including 1) an initial performance test, 2) establishment of continuous operating parameters, and 3) annual performance tests to demonstrate continuous compliance with the emission standards specified in 40 CFR 60.4213. Western Construction requests that the PTC specifically allow for a 60-day deadline for submission of the test report, to allow for sufficient time to prepare the report after the source testing has been completed.

"(e) If you are an owner or operator of a modified or reconstructed stationary CI internal combustion engine and must comply with the emission standards specified in §60.4204(e) or §60.4205(f), you must demonstrate compliance according to one of the methods specified in paragraphs (e)(1) or (2) of this section.

(1) Purchasing, or otherwise owning or operating, an engine certified to the emission standards in §60.4204(e) or §60.4205(f), as applicable.

(2) Conducting a performance test to demonstrate initial compliance with the emission standards according to the requirements specified in §60.4212 or §60.4213, as appropriate. The test must be conducted within 60 days after the engine commences operation after the modification or reconstruction."

The generator engines are not modified or reconstructed engines, and are not required to comply with 40 CFR 60.4204(e) or 60.4205(f). Therefore, this provision does not apply.

"(f) Emergency stationary ICE may be operated for the purpose of maintenance checks and readiness testing, provided that the tests are recommended by Federal, State or local government, the manufacturer, the vendor, or the insurance company associated with the engine. Maintenance checks and readiness testing of such units is limited to 100 hours per year. There is no time limit on the use of emergency stationary ICE in emergency situations. The owner or operator may petition the Administrator for approval of additional hours to be used for maintenance checks and readiness testing, but a petition is not required if the owner or operator maintains records indicating that Federal, State, or local standards require maintenance and testing of emergency ICE beyond 100 hours per year. Emergency stationary ICE may operate up to 50 hours per year in non-emergency situations, but those 50 hours are counted towards the 100 hours per year provided for maintenance and testing. The 50 hours per year for non-emergency situations cannot be used for peak shaving or to generate income for a facility to supply power to an electric grid or otherwise supply non-emergency power as part of a financial arrangement with another entity. For owners and operators of emergency engines, any operation other than emergency operation, maintenance and testing, and operation in non-emergency situations for 50 hours per year, as permitted in this section, is prohibited."

The generator engines are not emergency engines, and this provision does not apply.

"(g) If you do not install, configure, operate, and maintain your engine and control device according to the manufacturer's emission-related written instructions, or you change emission-related settings in a way that is not permitted by the manufacturer, you must demonstrate compliance as follows:

(1) If you are an owner or operator of a stationary CI internal combustion engine with maximum engine power less than 100 HP, you must keep a maintenance plan and records of conducted maintenance to demonstrate compliance and must, to the extent practicable, maintain and operate the engine in a manner consistent with good air pollution control practice for minimizing emissions. In addition, if you do not install and configure the engine and control device according to the manufacturer's emission-related written instructions, or you change the emission-related settings in a way that is not permitted by the manufacturer, you must conduct an initial performance test to demonstrate compliance with the applicable emission standards within 1 year of such action.

(2) If you are an owner or operator of a stationary CI internal combustion engine greater than or equal to 100 HP and less than or equal to 500 HP, you must keep a maintenance plan and records of conducted maintenance and must, to the extent practicable, maintain

and operate the engine in a manner consistent with good air pollution control practice for minimizing emissions. In addition, you must conduct an initial performance test to demonstrate compliance with the applicable emission standards within 1 year of startup, or within 1 year after an engine and control device is no longer installed, configured, operated, and maintained in accordance with the manufacturer's emission-related written instructions, or within 1 year after you change emission-related settings in a way that is not permitted by the manufacturer.

(3) If you are an owner or operator of a stationary CI internal combustion engine greater than 500 HP, you must keep a maintenance plan and records of conducted maintenance and must, to the extent practicable, maintain and operate the engine in a manner consistent with good air pollution control practice for minimizing emissions. In addition, you must conduct an initial performance test to demonstrate compliance with the applicable emission standards within 1 year of startup, or within 1 year after an engine and control device is no longer installed, configured, operated, and maintained in accordance with the manufacturer's emission-related written instructions, or within 1 year after you change emission-related settings in a way that is not permitted by the manufacturer. You must conduct subsequent performance testing every 8,760 hours of engine operation or 3 years, whichever comes first, thereafter to demonstrate compliance with the applicable emission standards."

In the event that Western Construction does not install, configure, operate, and maintain the generator engines and control devices according to the manufacturer's emission-related written instructions, or if the emission-related settings are changed in a way that is not permitted by the manufacturer, these provisions apply.

"60.4212 What test methods and other procedures must I use if I am an owner or operator of a stationary CI internal combustion engine with a displacement of less than 30 liters per cylinder?
Owners and operators of stationary CI ICE with a displacement of less than 30 liters per cylinder who conduct performance tests pursuant to this subpart must do so according to paragraphs (a) through (e) of this section.

(a) The performance test must be conducted according to the in-use testing procedures in 40 CFR part 1039, subpart F, for stationary CI ICE with a displacement of less than 10 liters per cylinder, and according to 40 CFR part 1042, subpart F, for stationary CI ICE with a displacement of greater than or equal to 10 liters per cylinder and less than 30 liters per cylinder.

(b) Exhaust emissions from stationary CI ICE that are complying with the emission standards for new CI engines in 40 CFR part 1039 must not exceed the not-to-exceed (NTE) standards for the same model year and maximum engine power as required in 40 CFR 1039.101(e) and 40 CFR 1039.102(g)(1), except as specified in 40 CFR 1039.104(d). This requirement starts when NTE requirements take effect for nonroad diesel engines under 40 CFR part 1039.

(c) Exhaust emissions from stationary CI ICE that are complying with the emission standards for new CI engines in 40 CFR 89.112 or 40 CFR 94.8, as applicable, must not exceed the NTE numerical requirements, rounded to the same number of decimal places as the applicable standard in 40 CFR 89.112 or 40 CFR 94.8, as applicable, determined from the following equation:

$$\text{NTE requirement for each pollutant} = (1.25) \times (\text{STD}) \qquad \text{(Eq. 1)}$$

Where:

STD = The standard specified for that pollutant in 40 CFR 89.112 or 40 CFR 94.8, as applicable.

Alternatively, stationary CI ICE that are complying with the emission standards for new CI engines in 40 CFR 89.112 or 40 CFR 94.8 may follow the testing procedures specified in §60.4213 of this subpart, as appropriate.

(d) Exhaust emissions from stationary CI ICE that are complying with the emission standards for pre-2007 model year engines in §60.4204(a), §60.4205(a), or §60.4205(c) must not exceed the NTE numerical requirements, rounded to the same number of decimal places as the applicable standard in §60.4204(a), §60.4205(a), or §60.4205(c), determined from the equation in paragraph (c) of this section.

Where:

STD = The standard specified for that pollutant in §60.4204(a), §60.4205(a), or §60.4205(c).

Alternatively, stationary CI ICE that are complying with the emission standards for pre-2007 model year engines in §60.4204(a), §60.4205(a), or §60.4205(c) may follow the testing procedures specified in §60.4213, as appropriate.

(e) Exhaust emissions from stationary CI ICE that are complying with the emission standards for new CI engines in 40 CFR part 1042 must not exceed the NTE standards for the same model year and maximum engine power as required in 40 CFR 1042.101(c)."

Any performance testing required for the night generator engine must comply with these provisions. Western Construction requests that the PTC specifically allow for a 60-day deadline for submission of the test report, to allow for sufficient time to prepare the report after the source testing has been completed.

"60.4213 What test methods and other procedures must I use if I am an owner or operator of a stationary CI internal combustion engine with a displacement of greater than or equal to 30 liters per cylinder?
Owners and operators of stationary CI ICE with a displacement of greater than or equal to 30 liters per cylinder must conduct performance tests according to paragraphs (a) through (f) of this section.

(a) Each performance test must be conducted according to the requirements in §60.8 and under the specific conditions that this subpart specifies in table 7. The test must be conducted within 10 percent of 100 percent peak (or the highest achievable) load.

(b) You may not conduct performance tests during periods of startup, shutdown, or malfunction, as specified in §60.8(c).

(c) You must conduct three separate test runs for each performance test required in this section, as specified in §60.8(f). Each test run must last at least 1 hour.

(d) To determine compliance with the percent reduction requirement, you must follow the requirements as specified in paragraphs (d)(1) through (3) of this section.

(1) You must use Equation 2 of this section to determine compliance with the percent reduction requirement:

$$\frac{C_i - C_o}{C_i} \times 100 = R \qquad \text{(Eq. 2)}$$

Where:

C_i= concentration of NO_X or PM at the control device inlet,
C_o= concentration of NO_X or PM at the control device outlet, and
R = percent reduction of NO_X or PM emissions.

(2) You must normalize the NO_X or PM concentrations at the inlet and outlet of the control device to a dry basis and to 15 percent oxygen (O_2) using Equation 3 of this section, or an equivalent percent carbon dioxide (CO_2) using the procedures described in paragraph (d)(3) of this section.

$$C_{adj} = C_d \frac{5.9}{20.9 - \% O_2} \qquad \text{(Eq. 3)}$$

Where:

C_{adj}= Calculated NO_X or PM concentration adjusted to 15 percent O_2.
C_d= Measured concentration of NO_X or PM, uncorrected.
5.9 = 20.9 percent O_2−15 percent O_2, the defined O_2correction value, percent.
%O_2= Measured O_2concentration, dry basis, percent.

(3) If pollutant concentrations are to be corrected to 15 percent O_2 and CO_2 concentration is measured in lieu of O_2 concentration measurement, a CO_2 correction factor is needed. Calculate the CO_2 correction factor as described in paragraphs (d)(3)(i) through (iii) of this section.

(i) Calculate the fuel-specific F_o value for the fuel burned during the test using values obtained from Method 19, Section 5.2, and the following equation:

$$F_o = \frac{0.209 F_d}{F_c} \quad \text{(Eq. 4)}$$

Where:

F_o= Fuel factor based on the ratio of O_2 volume to the ultimate CO_2 volume produced by the fuel at zero percent excess air.
0.209 = Fraction of air that is O_2, percent/100.
F_d= Ratio of the volume of dry effluent gas to the gross calorific value of the fuel from Method 19, dsm^3 /J ($dscf/10^6$ Btu).
F_c= Ratio of the volume of CO_2 produced to the gross calorific value of the fuel from Method 19, dsm^3 /J ($dscf/10^6$ Btu).

(ii) Calculate the CO_2 correction factor for correcting measurement data to 15 percent O_2, as follows:

$$X_{CO_2} = \frac{5.9}{F_o} \quad \text{(Eq. 5)}$$

Where:

X_{CO2}= CO_2 correction factor, percent.
5.9 = 20.9 percent O_2−15 percent O_2, the defined O_2 correction value, percent.

(iii) Calculate the NO_X and PM gas concentrations adjusted to 15 percent O_2 using CO_2 as follows:

$$C_{adj} = C_d \frac{X_{CO_2}}{\%CO_2} \quad \text{(Eq. 6)}$$

Where:

C_{adj}= Calculated NO_X or PM concentration adjusted to 15 percent O_2.
C_d= Measured concentration of NO_X or PM, uncorrected.
$\%CO_2$= Measured CO_2 concentration, dry basis, percent.

(e) To determine compliance with the NO_X mass per unit output emission limitation, convert the concentration of NO_X in the engine exhaust using Equation 7 of this section:

$$ER = \frac{C_d \times 1.912 \times 10^{-3} \times Q \times T}{\text{KW-hour}} \quad \text{(Eq. 7)}$$

Where:

ER = Emission rate in grams per KW-hour.
C_d= Measured NO_X concentration in ppm.
1.912×10^{-3}= Conversion constant for ppm NO_X to grams per standard cubic meter at 25 degrees Celsius.
Q = Stack gas volumetric flow rate, in standard cubic meter per hour.
T = Time of test run, in hours.
KW-hour = Brake work of the engine, in KW-hour.

(f) To determine compliance with the PM mass per unit output emission limitation, convert the concentration of PM in the engine exhaust using Equation 8 of this section:

$$ER = \frac{C_{adj} \times Q \times T}{\text{KW-hour}} \quad \text{(Eq. 8)}$$

Where:

ER = Emission rate in grams per KW-hour.
C_{adj}= Calculated PM concentration in grams per standard cubic meter.
Q = Stack gas volumetric flow rate, in standard cubic meter per hour.
T = Time of test run, in hours.
KW-hour = Energy output of the engine, in KW."

Any performance testing required for the operations generator engine must comply with these provisions. Western Construction requests that the PTC specifically allow for a 60-day deadline for submission of the test report, to allow for sufficient time to prepare the report after the source testing has been completed.

"60.4214 What are my notification, reporting, and recordkeeping requirements if I am an owner or operator of a stationary CI internal combustion engine?
(a) Owners and operators of non-emergency stationary CI ICE that are greater than 2,237 KW (3,000 HP), or have a displacement of greater than or equal to 10 liters per cylinder, or are pre-2007 model year engines that are greater than 130 KW (175 HP) and not certified, must meet the requirements of paragraphs (a)(1) and (2) of this section.

(1) Submit an initial notification as required in §60.7(a)(1). The notification must include the information in paragraphs (a)(1)(i) through (v) of this section.

(i) Name and address of the owner or operator;

(ii) The address of the affected source;

(iii) Engine information including make, model, engine family, serial number, model year, maximum engine power, and engine displacement;

(iv) Emission control equipment; and

(v) Fuel used.

(2) Keep records of the information in paragraphs (a)(2)(i) through (iv) of this section.

(i) All notifications submitted to comply with this subpart and all documentation supporting any notification.

(ii) Maintenance conducted on the engine.

(iii) If the stationary CI internal combustion is a certified engine, documentation from the manufacturer that the engine is certified to meet the emission standards.

(iv) If the stationary CI internal combustion is not a certified engine, documentation that the engine meets the emission standards."

The night generator engine does not meet any of the criteria in 40 CFR 60.4214(a), and is not subject to these provisions. The operations generator engine has a displacement greater than 10 liters per cylinder, and is subject to the requirements of paragraphs (a)(1) and (2) of this section.

"(b) If the stationary CI internal combustion engine is an emergency stationary internal combustion engine, the owner or operator is not required to submit an initial notification. Starting with the model years in table 5 to this subpart, if the emergency engine does not meet the standards applicable to non-emergency engines in the applicable model year, the owner or operator must keep records of the operation of the engine in emergency and non-emergency service that are recorded through the non-resettable hour meter. The owner must record the time of operation of the engine and the reason the engine was in operation during that time."

Neither of the generators is an emergency engine, and this section does not apply.

"(c) If the stationary CI internal combustion engine is equipped with a diesel particulate filter, the owner or operator must keep records of any corrective action taken after the backpressure monitor has notified the owner or operator that the high backpressure limit of the engine is approached."

Neither of the generators is equipped with a diesel particulate filter, and this provision does not apply.

"60.4215 What requirements must I meet for engines used in Guam, American Samoa, or the Commonwealth of the Northern Mariana Islands?"

The generators will not be used in these locations, and this provision does not apply.

"60.4216 What requirements must I meet for engines used in Alaska?"

The generators will not be used in this location, and this provision does not apply.

"60.4217 What emission standards must I meet if I am an owner or operator of a stationary internal combustion engine using special fuels?
Owners and operators of stationary CI ICE that do not use diesel fuel may petition the Administrator for approval of alternative emission standards, if they can demonstrate that they use a fuel that is not the fuel on which the manufacturer of the engine certified the engine and that the engine cannot meet the applicable standards required in §60.4204 or §60.4205 using such fuels and that use of such fuel is appropriate and reasonably necessary, considering cost, energy, technical feasibility, human health and environmental, and other factors, for the operation of the engine."

The generator engines do not use special fuels, and this provision does not apply.

"60.4218 What parts of the General Provisions apply to me?
Table 8 to this subpart shows which parts of the General Provisions in §§60.1 through 60.19 apply to you."

Portions of the General Provisions are applicable to the generator engines, as detailed in Table 8 of 40 CFR 60, Subpart IIII.

7.3 National Emission Standards for Hazardous Air Pollutants

The proposed facility is not subject to any National Emission Standards for Hazardous Air Pollutants in 40 CFR 61.

7.4 Maximum Achievable Control Technologies

7.4.1 Subpart ZZZZ—National Emissions Standards for Hazardous Air Pollutants for Stationary Reciprocating Internal Combustion Engines (40 CFR 6580-6675)

From Subpart ZZZZ:

"63.6580 What is the purpose of subpart ZZZZ?
Subpart ZZZZ establishes national emission limitations and operating limitations for hazardous air pollutants (HAP) emitted from stationary reciprocating internal combustion engines (RICE) located at major and area sources of HAP emissions. This subpart also

establishes requirements to demonstrate initial and continuous compliance with the emission limitations and operating limitations.

63.6585 Am I subject to this subpart?
You are subject to this subpart if you own or operate a stationary RICE at a major or area source of HAP emissions, except if the stationary RICE is being tested at a stationary RICE test cell/stand.

(a) A stationary RICE is any internal combustion engine which uses reciprocating motion to convert heat energy into mechanical work and which is not mobile. Stationary RICE differ from mobile RICE in that a stationary RICE is not a non-road engine as defined at 40 CFR 1068.30, and is not used to propel a motor vehicle or a vehicle used solely for competition.

(b) A major source of HAP emissions is a plant site that emits or has the potential to emit any single HAP at a rate of 10 tons (9.07 megagrams) or more per year or any combination of HAP at a rate of 25 tons (22.68 megagrams) or more per year, except that for oil and gas production facilities, a major source of HAP emissions is determined for each surface site.

(c) An area source of HAP emissions is a source that is not a major source.

(d) If you are an owner or operator of an area source subject to this subpart, your status as an entity subject to a standard or other requirements under this subpart does not subject you to the obligation to obtain a permit under 40 CFR part 70 or 71, provided you are not required to obtain a permit under 40 CFR 70.3(a) or 40 CFR 71.3(a) for a reason other than your status as an area source under this subpart. Notwithstanding the previous sentence, you must continue to comply with the provisions of this subpart as applicable.

(e) If you are an owner or operator of a stationary RICE used for national security purposes, you may be eligible to request an exemption from the requirements of this subpart as described in 40 CFR part 1068, subpart C."

The engines in the generators are considered to be stationary RICE at an area source of HAPs.

"*63.6590 What parts of my plant does this subpart cover?*
This subpart applies to each affected source.

(a) Affected source. An affected source is any existing, new, or reconstructed stationary RICE located at a major or area source of HAP emissions, excluding stationary RICE being tested at a stationary RICE test cell/stand.

(1) Existing stationary RICE.

(i) For stationary RICE with a site rating of more than 500 brake horsepower (HP) located at a major source of HAP emissions, a stationary RICE is existing if you commenced construction or reconstruction of the stationary RICE before December 19, 2002.

(ii) For stationary RICE with a site rating of less than or equal to 500 brake HP located at a major source of HAP emissions, a stationary RICE is existing if you commenced construction or reconstruction of the stationary RICE before June 12, 2006.

(iii) For stationary RICE located at an area source of HAP emissions, a stationary RICE is existing if you commenced construction or reconstruction of the stationary RICE before June 12, 2006.

(iv) A change in ownership of an existing stationary RICE does not make that stationary RICE a new or reconstructed stationary RICE.

(2) New stationary RICE. (i) A stationary RICE with a site rating of more than 500 brake HP located at a major source of HAP emissions is new if you commenced construction of the stationary RICE on or after December 19, 2002.

(ii) A stationary RICE with a site rating of equal to or less than 500 brake HP located at a major source of HAP emissions is new if you commenced construction of the stationary RICE on or after June 12, 2006.

(iii) A stationary RICE located at an area source of HAP emissions is new if you commenced construction of the stationary RICE on or after June 12, 2006.

(3) Reconstructed stationary RICE. (i) A stationary RICE with a site rating of more than 500 brake HP located at a major source of HAP emissions is reconstructed if you meet the definition of reconstruction in §63.2 and reconstruction is commenced on or after December 19, 2002.

(ii) A stationary RICE with a site rating of equal to or less than 500 brake HP located at a major source of HAP emissions is reconstructed if you meet the definition of reconstruction in §63.2 and reconstruction is commenced on or after June 12, 2006.

(iii) A stationary RICE located at an area source of HAP emissions is reconstructed if you meet the definition of reconstruction in §63.2 and reconstruction is commenced on or after June 12, 2006.

(b) Stationary RICE subject to limited requirements. (1) An affected source which meets either of the criteria in paragraphs (b)(1)(i) through (ii) of this section does not have to meet the requirements of this subpart and of subpart A of this part except for the initial notification requirements of §63.6645(f).

(i) The stationary RICE is a new or reconstructed emergency stationary RICE with a site rating of more than 500 brake HP located at a major source of HAP emissions.

(ii) The stationary RICE is a new or reconstructed limited use stationary RICE with a site rating of more than 500 brake HP located at a major source of HAP emissions.

(2) A new or reconstructed stationary RICE with a site rating of more than 500 brake HP located at a major source of HAP emissions which combusts landfill or digester gas equivalent to 10 percent or more of the gross heat input on an annual basis must meet the initial notification requirements of §63.6645(f) and the requirements of §§63.6625(c), 63.6650(g), and 63.6655(c). These stationary RICE do not have to meet the emission limitations and operating limitations of this subpart.

(3) The following stationary RICE do not have to meet the requirements of this subpart and of subpart A of this part, including initial notification requirements:

(i) Existing spark ignition 2 stroke lean burn (2SLB) stationary RICE with a site rating of more than 500 brake HP located at a major source of HAP emissions;

(ii) Existing spark ignition 4 stroke lean burn (4SLB) stationary RICE with a site rating of more than 500 brake HP located at a major source of HAP emissions;

(iii) Existing emergency stationary RICE with a site rating of more than 500 brake HP located at a major source of HAP emissions;

(iv) Existing limited use stationary RICE with a site rating of more than 500 brake HP located at a major source of HAP emissions;

(v) Existing stationary RICE with a site rating of more than 500 brake HP located at a major source of HAP emissions that combusts landfill gas or digester gas equivalent to 10 percent or more of the gross heat input on an annual basis;

(vi) Existing residential emergency stationary RICE located at an area source of HAP emissions;

(vii) Existing commercial emergency stationary RICE located at an area source of HAP emissions; or

(viii) Existing institutional emergency stationary RICE located at an area source of HAP emissions.

(c) Stationary RICE subject to Regulations under 40 CFR Part 60. An affected source that meets any of the criteria in paragraphs (c)(1) through (7) of this section must meet the requirements of this part by meeting the requirements of 40 CFR part 60 subpart IIII, for compression ignition engines or 40 CFR part 60 subpart JJJJ, for spark ignition engines. No further requirements apply for such engines under this part.

(1) A new or reconstructed stationary RICE located at an area source;

(2) A new or reconstructed 2SLB stationary RICE with a site rating of less than or equal to 500 brake HP located at a major source of HAP emissions;

(3) A new or reconstructed 4SLB stationary RICE with a site rating of less than 250 brake HP located at a major source of HAP emissions;

(4) A new or reconstructed spark ignition 4 stroke rich burn (4SRB) stationary RICE with a site rating of less than or equal to 500 brake HP located at a major source of HAP emissions;

(5) A new or reconstructed stationary RICE with a site rating of less than or equal to 500 brake HP located at a major source of HAP emissions which combusts landfill or digester gas equivalent to 10 percent or more of the gross heat input on an annual basis;

(6) A new or reconstructed emergency or limited use stationary RICE with a site rating of less than or equal to 500 brake HP located at a major source of HAP emissions;

(7) A new or reconstructed compression ignition (CI) stationary RICE with a site rating of less than or equal to 500 brake HP located at a major source of HAP emissions."

The engines in the generators are considered to be new stationary RICE at an area source. Per the terms of Subpart 63.6590(c)(1), these sources must meet the requirements of 40 CFR 60, Subpart IIII, and no further requirements apply for such engines under this part.

8. Co-Located Sources

Western Construction requests that the PTC incorporate allowances for co-location of a rock crushing plant or aggregate wash plant with Hot Plant #2. Discussions with DEQ's HMA permitting staff have indicated that the agency will typically make such allowances, provided that the HMA plant's production rate is reduced to half of its allowable production rate while any such co-located source is in operation at the same time.

Additionally, Western Construction requests that the PTC specifically incorporate language allowing a second HMA plant or concrete batch plant to be located on the same property as Hot Plant #2, so long as all sources (i.e., Hot Plant #2 as well as any other HMA plant or concrete batch plant) maintain the setback distances required by their respective PTCs, with no overlap in the required setback distances between any sources.

9. Application/Processing Fees

Per the requirements of IDAPA 58.01.01.224, an application fee of $1,000 is required at the time of the original submission of the PTC application. This fee has been submitted with the PTC application.

Per the requirements of IDAPA 58.01.01.225, a PTC processing fee, to be calculated by DEQ, will also be required upon receipt of an assessment that will be sent directly to Western Construction.

10. Summary & Conclusions

Western Construction is procuring a new, portable HMA plant, which will be used for asphalt paving of roadways in various locations throughout the State of Idaho. Uncontrolled and controlled potential emissions have been calculated, using a conservative approach to determine worst-case emissions for each of the following sources:

1) A drum dryer;
2) An asphalt tank heater;
3) An operations generator;
4) A night generator;
5) Various asphalt and fuel storage tanks;
6) HMA storage silos; and
7) An aggregate vibrating screen and various conveyors.

AERMOD model results show that the total controlled emissions of criteria pollutants will comply with the National Ambient Air Quality Standards at the setback distances specified for each production rate proposed for inclusion within the PTC. The hourly production rates and setback allowances requested for the PTC are presented in Table 9-1.

Table 9-1: Maximum, Hourly Production Rates and Required Setback Distances

Maximum Production Rate (tons/hour)	Setback Distance Required (feet)
500	591
450	532
400	489
350	430

The air dispersion model was also used to demonstrate ambient compliance with all TAPs, so long as the preceding setback distances are used in conjunction with TRACT emission rates for certain carcinogenic TAPs (refer to discussion in Section 6 of this document). It is proposed that the use of a baghouse on the drum dyer and HMA silo loading operations constitute TRACT for carcinogenic metal emissions, while good combustion practices, maintenance of the baghouse in accordance with manufacturer's specifications, and use of a covered conveyor from the drum dryer to the HMA silos constitute TRACT for carcinogenic organic and acid emissions.

The analyses in this permit application demonstrate that, with the recommended emissions controls and limitations on operation, the total emissions from this facility are compliant with the *Rules for the Control of Air Pollution in Idaho*. Western Construction recognizes that the proposed HMA plant is subject to 40 CFR 60 Subparts I and IIII, and that it is required to comply

with all applicable emissions monitoring and reporting requirements specified therein. Western Construction requests that DEQ issue a state-wide, portable HMA Plant PTC for its new HMA plant, in accordance with the terms of IDAPA 58.01.01.209.

11. References

Idaho Department of Environmental Quality (DEQ). "Rules for the control of Air Pollution in Idaho (IDAPA 58.01.01)". Available online at adm.idaho.gov/adminrules/rules/idapa58/0101.pdf.

Idaho Department of Environmental Quality (DEQ). December 31, 2002. "State of Idaho Air Quality Modeling Guideline". Available online at www.deq.idaho.gov/media/355037-modeling_guideline.pdf.

United States Environmental Protection Agency (EPA). May 2010. *Compilation of Air Pollutant Emission Factors*. "AP-42 Chapter 1, Section 3: Fuel Oil Combustion." Available online at www.epa.gov/ttn/chief/ap42/index.html#toc.

United States Environmental Protection Agency (EPA). July 1998. *Compilation of Air Pollutant Emission Factors*. "AP-42 Chapter 1, Section 4: Natural Gas Combustion." Available online at www.epa.gov/ttn/chief/ap42/ index.html#toc.

United States Environmental Protection Agency (EPA). July 2008. *Compilation of Air Pollutant Emission Factors*. "AP-42 Chapter 1, Section 5: Liquefied Petroleum Gas Combustion." Available online at www.epa.gov/ttn/chief/ ap42/index.html#toc.

United States Environmental Protection Agency (EPA). October 1996. *Compilation of Air Pollutant Emission Factors*. "AP-42 Chapter 1, Section 11: Waste Oil Combustion." Available online at www.epa.gov/ttn/chief/ap42/ index.html#toc.

United States Environmental Protection Agency (EPA). October 1996. *Compilation of Air Pollutant Emission Factors*. "AP-42 Chapter 3, Section 3: Gasoline and Diesel Industrial Engines." Available online at www.epa.gov /ttn/chief/ap42/index.html#toc.

United States Environmental Protection Agency (EPA). October 1996. *Compilation of Air Pollutant Emission Factors*. "AP-42 Chapter 3, Section 4: Large Stationary Diesel and All Stationary Dual-fuel Engines." Available online at www.epa.gov/ttn/chief/ap42/index.html#toc.

United States Environmental Protection Agency (EPA). November 2006. *Compilation of Air Pollutant Emission Factors*. "AP-42 Chapter 7, Section 1: Organic Liquid Storage Tanks." Available online at www.epa.gov/ttn/chief /ap42/index.html#toc.

United States Environmental Protection Agency (EPA). March 2004. *Compilation of Air Pollutant Emission Factors*. "AP-42 Chapter 11, Section 1: Hot Mix Asphalt Plants." Available online at www.epa.gov/ttn/chief/ap42/ index.html#toc.

United States Environmental Protection Agency (EPA). August 2004. *Compilation of Air Pollutant Emission Factors*. "AP-42 Chapter 11, Section 19: Crushed Stone Processing and Pulverized Mineral Processing." Available online at www.epa.gov/ttn/chief/ap42/index.html#toc.

United States Environmental Protection Agency (EPA). November 2006. *Compilation of Air Pollutant Emission Factors*. "AP-42 Chapter 13, Section 2: Aggregate Handling and Storage Piles." Available online at www.epa.gov/ttn/ chief/ap42/index.html#toc.

APPENDIX 1

DEQ Forms for a Portable HMA Plant

DEQ AIR QUALITY PROGRAM
1410 N. Hilton, Boise, ID 83706
For assistance, call the
Air Permit Hotline – 1-877-5PERMIT

General Information **Form GI**
Revision 7
2/18/10

Please see instructions on page 2 before filling out the form.

All information is required. If information is missing, the application will not be processed.

IDENTIFICATION

1. Company Name	2. Facility Name
Western Construction, Incorporated	Hot Plant #2

3. Brief Project Description	This is a Permit-to-Construct for a new, portable Hot Mix Asphalt Plant

FACILITY INFORMATION

4. Primary Facility Permit Contact Person/Title	Jason Jones		Estimator	
5. Telephone Number and Email Address	208-345-1440		jjones@wciboise.com	
6. Alternate Facility Contact Person/Title	Stevn Heaton		Vice President	
7. Telephone Number and Email Address	208-345-1400		steve@wciboise.com	
8. Address to Which the Permit Should be Sent	P.O. Box 15569			
9. City/County/State/Zip Code	Boise	Ada	Idaho	83715
10. Equipment Location Address (if different than the mailing address above)	Portable/statewide			
11. City/County/State/Zip Code				
12. Is the Equipment Portable?	☒ Yes ☐ No			
13. SIC Code(s) and NAICS Code	Primary SIC: 2951	Secondary SIC:	NAICS: 324121	
14. Brief Business Description and Principal Product	Hot Mix Asphalt Production			
15. Indentify any adjacent or contiguous facility that this company owns and/or operates				
16. Specify the reason for the application	☒ Permit to Construct (PTC) For Tier I permitted facilities only: If you are applying for a PTC then you must also specify how the PTC will be incorporated into the Tier I permit. ☐ Incorporate the PTC at the time of the Tier I renewal ☐ Co-process the Tier I modification and PTC ☐ Administratively amend the Tier I permit to incorporate the PTC upon your request (IDAPA 58.01.01.209.05.a, b, or c) ☐ Tier I Permit ☐ Tier II Permit ☐ Tier II/Permit to Construct			

CERTIFICATION

In accordance with **IDAPA 58.01.01.123 (Rules for the Control of Air Pollution in Idaho), I** certify based on information and belief formed after reasonable inquiry, the statements and information in the document(s) are true, accurate, and complete.

17. Responsible Official's Name/Title	Steve Heaton	Vice Prseident	
18. Responsible Official's Signature	Steven C Heaton	Date	2-1-12

19. ☒ Check here to indicate that you would like to review the draft permit prior to final issuance.

DEQ AIR QUALITY PROGRAM
1410 N. Hilton, Boise, ID 83706
For assistance, call the
Air Permit Hotline – 1-877-5PERMIT

Asphalt Plant - **Form HMAP**
Revision 9
11/17/11

Please see instructions on pages 3-4 before filling out the form.

IDENTIFICATION

1. Company Name	2. Facility Name:
Western Construction, Incorporated	Hot Plant #2

3. Brief Project Description: This is a Permit-to-Construct for a new, portable Hot Mix Asphalt Plant.

GENERAL INFORMATION

4. Proposed Location of the Asphalt Plant and other plant details:

☐ Not portable, will remain at one location. **Note:** Please include a specific location (location address, UTM coordinates, Section, Township, Range, etc.) and a plot plan of the proposed location on a separate sheet.

☒ Portable throughout the entire state of Idaho. Has this asphalt plant been previously permitted? ☐ Yes (provide details) ☒ No

Will the facility use electrical line power (no IC engines powering generators)? ☐ Yes (IC engines sections below may be skipped) ☒ No

Will the facility use IC engines to generate electricity? ☒ Yes (complete the IC engine sections below) ☐ No

Will the facility produce asphalt at the same time as when aggregate is being crushed at the facility? ☒ Yes (provide details) ☐ No

ASPHALT DRUM DRYER SPECIFICATIONS

5. Drum Dryer Manufacturer: Gencor Industries, Inc. 6. Model: Model 400 Ultradrum 7. Date Manufactured: 2011

8. Rated heat input capacity: 135 MMBtu/hr 9. Maximum Asphalt Production: 350 T/hr 4375 T/day 835625 T/yr

10. Maximum percentage of Recycled Asphalt Product (RAP) to be used? 30 % **Note:** Up to 50% can be allowed.

11. Are emissions from filling of the asphalt storage silo routed back to the drum dryer? ☒ Yes ☐ No 12. Date of the most recent source test: N/A

13. Fuel(s) combusted in the drum dryer (check all that apply)? ☒ Distillate (#2) fuel oil ☒ Used oil/RFO4 oil ☒ Natural gas/LNG ☒ LPG/propane
If distillate fuel oil or used oil/RFO4 oil is used, what is the maximum sulfur content? ☒ 15 ppm (0.0015% by weight) ☒ 500 ppm (~~0.05%~~ by weight)
↳ DIESEL 0.5% FOR RFO

14. Does the drum dryer have an emissions control device? ☒ Yes ☐ No
If "yes", what emissions control device is used? ☒ Baghouse (also complete Form **BCE**) ☐ Scrubber (also complete Form **SCE**)

15. Drum dryer exhaust stack parameters: Diameter 52 inches Height 41.5 feet Temperature 275 °F Flow rate 21906 acfm

ASPHATIC OIL TANK HEATER SPECIFICATIONS

16. Asphaltic Oil Tank Heater Manufacturer: Gencor Industries, Inc. 17. Model: HYCGO-100 18. Rated heat input capacity: 0.5 MMBtu/hr

19. Is worst-case operation of the heater **greater than 8 hrs/day or 2,000 hrs/yr**? No ☐ Go to question 22 Yes ☒ Answer questions 20 and 21

20. If "Yes", what is the maximum daily operation: 24 hrs/day 21. If "Yes", what is the maximum annual operation: 8760 hrs/yr

22. Fuel combusted in the asphaltic oil tank heater? ☒ Distillate fuel ☒ Natural gas/LNG ☒ LPG/propane
If distillate fuel oil (#1, #2, or a mixture) is used, what is the maximum sulfur content? ☒ 15 ppm (0.0015% by weight) ☐ 500 ppm (0.05% by weight)

23. Tank heater exhaust stack parameters: Diameter 13.5 inches Height 11 feet Temperature 460 °F Flow rate 69.4 acfm

PRIMARY IC ENGINE (≥600 bhp) SPECIFICATIONS

24. IC Engine Manufacturer: Cummins Inc. 25. Model: QST30-G2 26. Date Manufactured: 11/9/2011 27. Model year: 2006

28. Maximum rated horsepower (per the data plate): 1200 bhp 29. EPA Certification: Tier rating number Tier 2 or ☐ None

30. Maximum daily operation: 13.5 hrs/day 31. Maximum annual operation: 2578.5 hrs/yr **Note:** These operational limits will be placed in the permit.

32. Fuel combusted in the IC engine? ☒ Distillate fuel oil ☐ Natural gas/LNG ☐ LPG/propane
If distillate fuel oil (#1, #2, or a mixture) is used, what is the maximum sulfur content? ☒ 15 ppm (0.0015% by weight) ☐ 500 ppm (0.05% by weight)

33. IC engine exhaust stack parameters: Diameter 9 inches Height 32.8 feet Temperature 924 °F Flow rate 6603 acfm

Questions 34 through 39 apply to non-Tier certified IC engines or Tier certified IC engines manufactured prior to July 11, 2005. If you are proposing a Tier certified IC engine manufactured on and after July 11, 2005 do not answer questions 34 through 39.

34. Will CO emissions be limited to a specific ppmvd (i.e. 49 or 23)? ☐ Yes ☐ No 35. Will CO emissions be reduced by 70% or more? ☐ Yes ☐ No

36. Will a CEMS (Continuous Emissions Monitoring System) be used to measure pollutants in the IC engine exhaust stream? ☐ Yes ☐ No

37. Will a CPMS (Continuous Parameters Monitoring System) be used to measure parameters of the IC engine exhaust stream? ☐ Yes ☐ No

38. Will the IC engine be equipped with an oxidation catalyst? ☐ Yes ☐ No

39. Will the oxidation catalyst be equipped with a temperature measurement system to ensure it is operating properly? ☐ Yes ☐ No

SECONDARY IC ENGINE (<600 bhp) SPECIFICATIONS

40. IC Engine Manufacturer: John Deere 41. Model: PowerTech 4045D 42. Date Manufactured: 2007 43. Model year: 2007

44. Maximum rated horsepower (per the data plate): 67 bhp 45. EPA Certification: Tier rating number Tier 2 or ☐ None

46. Maximum daily operation: 24 hrs/day 47. Maximum annual operation: 8760 hrs/yr **Note:** These operational limits will be placed in the permit.

48. Fuel combusted in the IC engine? ☒ Distillate fuel oil ☐ Natural gas/LNG ☐ LPG/propane
If distillate fuel oil (#1, #2, or a mixture) is used, what is the maximum sulfur content? ☒ 15 ppm (0.0015% by weight) ☐ 500 ppm (0.05% by weight)

49. IC engine exhaust stack parameters: Diameter 3 inches Height 6 feet Temperature 1000 °F Flow rate 348.5 acfm

Questions 50 through 55 apply to non-Tier certified IC engines rated at > 300 bhp or Tier certified IC engines rated at > 300 bhp and manufactured prior to July 11, 2005. If you are proposing a non-Tier certified IC engine rated at ≤ 300 bhp or a Tier certified IC engine rated at ≤ 300 bhp and manufactured on and after July 11, 2005 do not answer questions 50 through 55.

50. Will CO emissions be limited to a specific ppmvd (i.e. 49 or 23)? ☐ Yes ☐ No 51. Will CO emissions be reduced by 70% or more? ☐ Yes ☐ No

52. Will a CEMS (Continuous Emissions Monitoring System) be used to measure pollutants in the IC engine exhaust stream? ☐ Yes ☐ No

53. Will a CPMS (Continuous Parameters Monitoring System) be used to measure parameters of the IC engine exhaust stream? ☐ Yes ☐ No

54. Will the IC engine be equipped with an oxidation catalyst? ☐ Yes ☐ No

55. Will the oxidation catalyst be equipped with a temperature measurement system to ensure it is operating properly? ☐ Yes ☐ No

DEQ AIR QUALITY PROGRAM
1410 N. Hilton, Boise, ID 83706
For assistance, call the
Air Permit Hotline – 1-877-5PERMIT

Asphalt Plant - **Form HMAP**
Revision 9
11/17/11

Please see instructions on pages 3-4 before filling out the form.

IDENTIFICATION

1. Company Name	2. Facility Name:
Western Construction, Incorporated	Hot Plant #2

3. Brief Project Description: This is a Permit-to-Construct for a new, portable Hot Mix Asphalt Plant.

GENERAL INFORMATION

4. Proposed Location of the Asphalt Plant and other plant details:

☐ Not portable, will remain at one location. **Note:** Please include a specific location (location address, UTM coordinates, Section, Township, Range, etc.) and a plot plan of the proposed location on a separate sheet.

☒ Portable throughout the entire state of Idaho. Has this asphalt plant been previously permitted? ☐ Yes (provide details) ☒ No

Will the facility use electrical line power (no IC engines powering generators)? ☐ Yes (IC engines sections below may be skipped) ☒ No

Will the facility use IC engines to generate electricity? ☒ Yes (complete the IC engine sections below) ☐ No

Will the facility produce asphalt at the same time as when aggregate is being crushed at the facility? ☒ Yes (provide details) ☐ No

ASPHALT DRUM DRYER SPECIFICATIONS

5. Drum Dryer Manufacturer: Gencor Industries, Inc. 6. Model: Model 400 Ultradrum 7. Date Manufactured: 2011

8. Rated heat input capacity: 135 MMBtu/hr 9. Maximum Asphalt Production: 400 T/hr 5000 T/day 955000 T/yr

10. Maximum percentage of Recycled Asphalt Product (RAP) to be used? 30 % **Note:** Up to 50% can be allowed.

11. Are emissions from filling of the asphalt storage silo routed back to the drum dryer? ☒ Yes ☐ No 12. Date of the most recent source test: N/A

13. Fuel(s) combusted in the drum dryer (check all that apply)? ☒ Distillate (#2) fuel oil ☒ Used oil/RFO4 oil ☒ Natural gas/LNG ☒ LPG/propane
If distillate fuel oil or used oil/RFO4 oil is used, what is the maximum sulfur content? ☒ 15 ppm (0.0015% by weight) ☒ 500 ppm (~~0.05%~~ by weight)
↳ DIESEL 0.5% FOR RFO

14. Does the drum dryer have an emissions control device? ☒ Yes ☐ No
If "yes", what emissions control device is used? ☒ Baghouse (also complete Form **BCE**) ☐ Scrubber (also complete Form **SCE**)

15. Drum dryer exhaust stack parameters: Diameter 52 inches Height 41.5 feet Temperature 275 °F Flow rate 21906 acfm

ASPHATIC OIL TANK HEATER SPECIFICATIONS

16. Asphaltic Oil Tank Heater Manufacturer: Gencor Industries, Inc. 17. Model: HYCGO-100 18. Rated heat input capacity: 0.5 MMBtu/hr

19. Is worst-case operation of the heater **greater than 8 hrs/day or 2,000 hrs/yr**? No ☐ Go to question 22 Yes ☒ Answer questions 20 and 21

20. If "Yes", what is the maximum daily operation: 24 hrs/day 21. If "Yes", what is the maximum annual operation: 8760 hrs/yr

22. Fuel combusted in the asphaltic oil tank heater? ☒ Distillate fuel ☒ Natural gas/LNG ☒ LPG/propane
If distillate fuel oil (#1, #2, or a mixture) is used, what is the maximum sulfur content? ☒ 15 ppm (0.0015% by weight) ☐ 500 ppm (0.05% by weight)

23. Tank heater exhaust stack parameters: Diameter 13.5 inches Height 11 feet Temperature 460 °F Flow rate 69.4 acfm

PRIMARY IC ENGINE (≥600 bhp) SPECIFICATIONS

24. IC Engine Manufacturer: Cummins Inc. 25. Model: QST30-G2 26. Date Manufactured: 11/9/2011 27. Model year: 2006

28. Maximum rated horsepower (per the data plate): 1200 bhp 29. EPA Certification: Tier rating number Tier 2 or ☐ None

30. Maximum daily operation: 13.5 hrs/day 31. Maximum annual operation: 2578.5 hrs/yr **Note:** These operational limits will be placed in the permit.

32. Fuel combusted in the IC engine? ☒ Distillate fuel oil ☐ Natural gas/LNG ☐ LPG/propane
If distillate fuel oil (#1, #2, or a mixture) is used, what is the maximum sulfur content? ☒ 15 ppm (0.0015% by weight) ☐ 500 ppm (0.05% by weight)

33. IC engine exhaust stack parameters: Diameter 9 inches Height 32.8 feet Temperature 924 °F Flow rate 6603 acfm

Questions 34 through 39 apply to non-Tier certified IC engines or Tier certified IC engines manufactured prior to July 11, 2005. If you are proposing a Tier certified IC engine manufactured on and after July 11, 2005 do not answer questions 34 through 39.

34. Will CO emissions be limited to a specific ppmvd (i.e. 49 or 23)? ☐ Yes ☐ No 35. Will CO emissions be reduced by 70% or more? ☐ Yes ☐ No

36. Will a CEMS (Continuous Emissions Monitoring System) be used to measure pollutants in the IC engine exhaust stream? ☐ Yes ☐ No

37. Will a CPMS (Continuous Parameters Monitoring System) be used to measure parameters of the IC engine exhaust stream? ☐ Yes ☐ No

38. Will the IC engine be equipped with an oxidation catalyst? ☐ Yes ☐ No

39. Will the oxidation catalyst be equipped with a temperature measurement system to ensure it is operating properly? ☐ Yes ☐ No

SECONDARY IC ENGINE (<600 bhp) SPECIFICATIONS

40. IC Engine Manufacturer: John Deere 41. Model: PowerTech 4045D 42. Date Manufactured: 2007 43. Model year: 2007

44. Maximum rated horsepower (per the data plate): 67 bhp 45. EPA Certification: Tier rating number Tier 2 or ☐ None

46. Maximum daily operation: 24 hrs/day 47. Maximum annual operation: 8760 hrs/yr **Note:** These operational limits will be placed in the permit.

48. Fuel combusted in the IC engine? ☒ Distillate fuel oil ☐ Natural gas/LNG ☐ LPG/propane
    If distillate fuel oil (#1, #2, or a mixture) is used, what is the maximum sulfur content? ☒ 15 ppm (0.0015% by weight) ☐ 500 ppm (0.05% by weight)

49. IC engine exhaust stack parameters: Diameter 3 inches Height 6 feet Temperature 1000 °F Flow rate 348.5 acfm

Questions 50 through 55 apply to non-Tier certified IC engines rated at > 300 bhp or Tier certified IC engines rated at > 300 bhp and manufactured prior to July 11, 2005. If you are proposing a non-Tier certified IC engine rated at ≤ 300 bhp or a Tier certified IC engine rated at ≤ 300 bhp and manufactured on and after July 11, 2005 do not answer questions 50 through 55.

50. Will CO emissions be limited to a specific ppmvd (i.e. 49 or 23)? ☐ Yes ☐ No 51. Will CO emissions be reduced by 70% or more? ☐ Yes ☐ No

52. Will a CEMS (Continuous Emissions Monitoring System) be used to measure pollutants in the IC engine exhaust stream? ☐ Yes ☐ No

53. Will a CPMS (Continuous Parameters Monitoring System) be used to measure parameters of the IC engine exhaust stream? ☐ Yes ☐ No

54. Will the IC engine be equipped with an oxidation catalyst? ☐ Yes ☐ No

55. Will the oxidation catalyst be equipped with a temperature measurement system to ensure it is operating properly? ☐ Yes ☐ No

DEQ AIR QUALITY PROGRAM
1410 N. Hilton, Boise, ID 83706
For assistance, call the
Air Permit Hotline – 1-877-5PERMIT

Asphalt Plant - **Form HMAP**
Revision 9
11/17/11

Please see instructions on pages 3-4 before filling out the form.

IDENTIFICATION

1. Company Name	2. Facility Name:
Western Construction, Incorporated	Hot Plant #2

3. Brief Project Description: This is a Permit-to-Construct for a new, portable Hot Mix Asphalt Plant.

GENERAL INFORMATION

4. Proposed Location of the Asphalt Plant and other plant details:

☐ Not portable, will remain at one location. **Note:** Please include a specific location (location address, UTM coordinates, Section, Township, Range, etc.) and a plot plan of the proposed location on a separate sheet.

☒ Portable throughout the entire state of Idaho. Has this asphalt plant been previously permitted? ☐ Yes (provide details) ☒ No

Will the facility use electrical line power (no IC engines powering generators)? ☐ Yes (IC engines sections below may be skipped) ☒ No

Will the facility use IC engines to generate electricity? ☒ Yes (complete the IC engine sections below) ☐ No

Will the facility produce asphalt at the same time as when aggregate is being crushed at the facility? ☒ Yes (provide details) ☐ No

ASPHALT DRUM DRYER SPECIFICATIONS

5. Drum Dryer Manufacturer: Gencor Industries, Inc. 6. Model: Model 400 Ultradrum 7. Date Manufactured: 2011

8. Rated heat input capacity: 135 MMBtu/hr 9. Maximum Asphalt Production: 450 T/hr 5625 T/day 1074375 T/yr

10. Maximum percentage of Recycled Asphalt Product (RAP) to be used? 30 % **Note:** Up to 50% can be allowed.

11. Are emissions from filling of the asphalt storage silo routed back to the drum dryer? ☒ Yes ☐ No 12. Date of the most recent source test: N/A

13. Fuel(s) combusted in the drum dryer (check all that apply)? ☒ Distillate (#2) fuel oil ☒ Used oil/RFO4 oil ☒ Natural gas/LNG ☒ LPG/propane
If distillate fuel oil or used oil/RFO4 oil is used, what is the maximum sulfur content? ☒ 15 ppm (0.0015% by weight) ☒ 500 ppm (~~0.05%~~ by weight)
↳ DIESEL 0.5% FOR RFO

14. Does the drum dryer have an emissions control device? ☒ Yes ☐ No
If "yes", what emissions control device is used? ☒ Baghouse (also complete Form **BCE**) ☐ Scrubber (also complete Form **SCE**)

15. Drum dryer exhaust stack parameters: Diameter 52 inches Height 41.5 feet Temperature 275 °F Flow rate 21906 acfm

ASPHATIC OIL TANK HEATER SPECIFICATIONS

16. Asphaltic Oil Tank Heater Manufacturer: Gencor Industries, Inc. 17. Model: HYCGO-100 18. Rated heat input capacity: 0.5 MMBtu/hr

19. Is worst-case operation of the heater **greater than 8 hrs/day or 2,000 hrs/yr**? No ☐ Go to question 22 Yes ☒ Answer questions 20 and 21

20. If "Yes", what is the maximum daily operation: 24 hrs/day 21. If "Yes", what is the maximum annual operation: 8760 hrs/yr

22. Fuel combusted in the asphaltic oil tank heater? ☒ Distillate fuel ☒ Natural gas/LNG ☒ LPG/propane
If distillate fuel oil (#1, #2, or a mixture) is used, what is the maximum sulfur content? ☒ 15 ppm (0.0015% by weight) ☐ 500 ppm (0.05% by weight)

23. Tank heater exhaust stack parameters: Diameter 13.5 inches Height 11 feet Temperature 460 °F Flow rate 69.4 acfm

PRIMARY IC ENGINE (≥600 bhp) SPECIFICATIONS

24. IC Engine Manufacturer: Cummins Inc. 25. Model: QST30-G2 26. Date Manufactured: 11/9/2011 27. Model year: 2006

28. Maximum rated horsepower (per the data plate): 1200 bhp 29. EPA Certification: Tier rating number Tier 2 or ☐ None

30. Maximum daily operation: 13.5 hrs/day 31. Maximum annual operation: 2578.5 hrs/yr **Note:** These operational limits will be placed in the permit.

32. Fuel combusted in the IC engine? ☒ Distillate fuel oil ☐ Natural gas/LNG ☐ LPG/propane
If distillate fuel oil (#1, #2, or a mixture) is used, what is the maximum sulfur content? ☒ 15 ppm (0.0015% by weight) ☐ 500 ppm (0.05% by weight)

33. IC engine exhaust stack parameters: Diameter 9 inches Height 32.8 feet Temperature 924 °F Flow rate 6603 acfm

Questions 34 through 39 apply to non-Tier certified IC engines or Tier certified IC engines manufactured prior to July 11, 2005. If you are proposing a Tier certified IC engine manufactured on and after July 11, 2005 do not answer questions 34 through 39.

34. Will CO emissions be limited to a specific ppmvd (i.e. 49 or 23)? ☐ Yes ☐ No 35. Will CO emissions be reduced by 70% or more? ☐ Yes ☐ No

36. Will a CEMS (Continuous Emissions Monitoring System) be used to measure pollutants in the IC engine exhaust stream? ☐ Yes ☐ No

37. Will a CPMS (Continuous Parameters Monitoring System) be used to measure parameters of the IC engine exhaust stream? ☐ Yes ☐ No

38. Will the IC engine be equipped with an oxidation catalyst? ☐ Yes ☐ No

39. Will the oxidation catalyst be equipped with a temperature measurement system to ensure it is operating properly? ☐ Yes ☐ No

SECONDARY IC ENGINE (<600 bhp) SPECIFICATIONS

40. IC Engine Manufacturer: John Deere 41. Model: PowerTech 4045D 42. Date Manufactured: 2007 43. Model year: 2007

44. Maximum rated horsepower (per the data plate): 67 bhp 45. EPA Certification: Tier rating number Tier 2 or ☐ None

46. Maximum daily operation: 24 hrs/day 47. Maximum annual operation: 8760 hrs/yr **Note:** These operational limits will be placed in the permit.

48. Fuel combusted in the IC engine? ☒ Distillate fuel oil ☐ Natural gas/LNG ☐ LPG/propane
    If distillate fuel oil (#1, #2, or a mixture) is used, what is the maximum sulfur content? ☒ 15 ppm (0.0015% by weight) ☐ 500 ppm (0.05% by weight)

49. IC engine exhaust stack parameters: Diameter 3 inches Height 6 feet Temperature 1000 °F Flow rate 348.5 acfm

Questions 50 through 55 apply to non-Tier certified IC engines rated at > 300 bhp or Tier certified IC engines rated at > 300 bhp and manufactured prior to July 11, 2005. If you are proposing a non-Tier certified IC engine rated at ≤ 300 bhp or a Tier certified IC engine rated at ≤ 300 bhp and manufactured on and after July 11, 2005 do not answer questions 50 through 55.

50. Will CO emissions be limited to a specific ppmvd (i.e. 49 or 23)? ☐ Yes ☐ No 51. Will CO emissions be reduced by 70% or more? ☐ Yes ☐ No

52. Will a CEMS (Continuous Emissions Monitoring System) be used to measure pollutants in the IC engine exhaust stream? ☐ Yes ☐ No

53. Will a CPMS (Continuous Parameters Monitoring System) be used to measure parameters of the IC engine exhaust stream? ☐ Yes ☐ No

54. Will the IC engine be equipped with an oxidation catalyst? ☐ Yes ☐ No

55. Will the oxidation catalyst be equipped with a temperature measurement system to ensure it is operating properly? ☐ Yes ☐ No

DEQ AIR QUALITY PROGRAM
1410 N. Hilton, Boise, ID 83706
For assistance, call the
Air Permit Hotline – 1-877-5PERMIT

Asphalt Plant - **Form HMAP**
Revision 9
11/17/11

Please see instructions on pages 3-4 before filling out the form.

IDENTIFICATION

1. Company Name	2. Facility Name:
Western Construction, Incorporated	Hot Plant #2

3. Brief Project Description: This is a Permit-to-Construct for a new, portable Hot Mix Asphalt Plant.

GENERAL INFORMATION

4. Proposed Location of the Asphalt Plant and other plant details:

☐ Not portable, will remain at one location. **Note:** Please include a specific location (location address, UTM coordinates, Section, Township, Range, etc.) and a plot plan of the proposed location on a separate sheet.

☒ Portable throughout the entire state of Idaho. Has this asphalt plant been previously permitted? ☐ Yes (provide details) ☒ No

Will the facility use electrical line power (no IC engines powering generators)? ☐ Yes (IC engines sections below may be skipped) ☒ No

Will the facility use IC engines to generate electricity? ☒ Yes (complete the IC engine sections below) ☐ No

Will the facility produce asphalt at the same time as when aggregate is being crushed at the facility? ☒ Yes (provide details) ☒ No

ASPHALT DRUM DRYER SPECIFICATIONS

5. Drum Dryer Manufacturer: Gencor Industries, Inc. 6. Model: Model 400 Ultradrum 7. Date Manufactured: 2011

8. Rated heat input capacity: 135 MMBtu/hr 9. Maximum Asphalt Production: 500 T/hr 6250 T/day 1193750 T/yr

10. Maximum percentage of Recycled Asphalt Product (RAP) to be used? 30 % **Note:** Up to 50% can be allowed.

11. Are emissions from filling of the asphalt storage silo routed back to the drum dryer? ☒ Yes ☐ No 12. Date of the most recent source test: N/A

13. Fuel(s) combusted in the drum dryer (check all that apply)? ☒ Distillate (#2) fuel oil ☒ Used oil/RFO4 oil ☒ Natural gas/LNG ☒ LPG/propane
If distillate fuel oil or used oil/RFO4 oil is used, what is the maximum sulfur content? ☒ 15 ppm (0.0015% by weight) ☒ 500 ppm (~~0.05%~~ by weight)
↳ DIESEL 0.5% FOR RFO

14. Does the drum dryer have an emissions control device? ☒ Yes ☐ No
If "yes", what emissions control device is used? ☒ Baghouse (also complete Form **BCE**) ☐ Scrubber (also complete Form **SCE**)

15. Drum dryer exhaust stack parameters: Diameter 52 inches Height 41.5 feet Temperature 275 °F Flow rate 21906 acfm

ASPHATIC OIL TANK HEATER SPECIFICATIONS

16. Asphaltic Oil Tank Heater Manufacturer: Gencor Industries, Inc. 17. Model: HYCGO-100 18. Rated heat input capacity: 0.5 MMBtu/hr

19. Is worst-case operation of the heater **greater than 8 hrs/day or 2,000 hrs/yr**? No ☐ Go to question 22 Yes ☒ Answer questions 20 and 21

20. If "Yes", what is the maximum daily operation: 24 hrs/day 21. If "Yes", what is the maximum annual operation: 8760 hrs/yr

22. Fuel combusted in the asphaltic oil tank heater? ☒ Distillate fuel ☒ Natural gas/LNG ☒ LPG/propane
If distillate fuel oil (#1, #2, or a mixture) is used, what is the maximum sulfur content? ☒ 15 ppm (0.0015% by weight) ☐ 500 ppm (0.05% by weight)

23. Tank heater exhaust stack parameters: Diameter 13.5 inches Height 11 feet Temperature 460 °F Flow rate 69.4 acfm

PRIMARY IC ENGINE (≥600 bhp) SPECIFICATIONS

24. IC Engine Manufacturer: Cummins Inc. 25. Model: QST30-G2 26. Date Manufactured: 11/9/2011 27. Model year: 2006

28. Maximum rated horsepower (per the data plate): 1200 bhp 29. EPA Certification: Tier rating number Tier 2 or ☐ None

30. Maximum daily operation: 13.5 hrs/day 31. Maximum annual operation: 2578.5 hrs/yr **Note:** These operational limits will be placed in the permit.

32. Fuel combusted in the IC engine? ☒ Distillate fuel oil ☐ Natural gas/LNG ☐ LPG/propane
If distillate fuel oil (#1, #2, or a mixture) is used, what is the maximum sulfur content? ☒ 15 ppm (0.0015% by weight) ☐ 500 ppm (0.05% by weight)

33. IC engine exhaust stack parameters: Diameter 9 inches Height 32.8 feet Temperature 924 °F Flow rate 6603 acfm

Questions 34 through 39 apply to non-Tier certified IC engines or Tier certified IC engines manufactured prior to July 11, 2005. If you are proposing a Tier certified IC engine manufactured on and after July 11, 2005 do not answer questions 34 through 39.

34. Will CO emissions be limited to a specific ppmvd (i.e. 49 or 23)? ☐ Yes ☐ No 35. Will CO emissions be reduced by 70% or more? ☐ Yes ☐ No

36. Will a CEMS (Continuous Emissions Monitoring System) be used to measure pollutants in the IC engine exhaust stream? ☐ Yes ☐ No

37. Will a CPMS (Continuous Parameters Monitoring System) be used to measure parameters of the IC engine exhaust stream? ☐ Yes ☐ No

38. Will the IC engine be equipped with an oxidation catalyst? ☐ Yes ☐ No

39. Will the oxidation catalyst be equipped with a temperature measurement system to ensure it is operating properly? ☐ Yes ☐ No

SECONDARY IC ENGINE (<600 bhp) SPECIFICATIONS

40. IC Engine Manufacturer: John Deere 41. Model: PowerTech 4045D 42. Date Manufactured: 2007 43. Model year: 2007

44. Maximum rated horsepower (per the data plate): 67 bhp 45. EPA Certification: Tier rating number Tier 2 or ☐ None

46. Maximum daily operation: 24 hrs/day 47. Maximum annual operation: 8760 hrs/yr **Note:** These operational limits will be placed in the permit.

48. Fuel combusted in the IC engine? ☒ Distillate fuel oil ☐ Natural gas/LNG ☐ LPG/propane
If distillate fuel oil (#1, #2, or a mixture) is used, what is the maximum sulfur content? ☒ 15 ppm (0.0015% by weight) ☐ 500 ppm (0.05% by weight)

49. IC engine exhaust stack parameters: Diameter 3 inches Height 6 feet Temperature 1000 °F Flow rate 348.5 acfm

Questions 50 through 55 apply to non-Tier certified IC engines rated at > 300 bhp or Tier certified IC engines rated at > 300 bhp and manufactured prior to July 11, 2005. If you are proposing a non-Tier certified IC engine rated at ≤ 300 bhp or a Tier certified IC engine rated at ≤ 300 bhp and manufactured on and after July 11, 2005 do not answer questions 50 through 55.

50. Will CO emissions be limited to a specific ppmvd (i.e. 49 or 23)? ☐ Yes ☐ No 51. Will CO emissions be reduced by 70% or more? ☐ Yes ☐ No

52. Will a CEMS (Continuous Emissions Monitoring System) be used to measure pollutants in the IC engine exhaust stream? ☐ Yes ☐ No

53. Will a CPMS (Continuous Parameters Monitoring System) be used to measure parameters of the IC engine exhaust stream? ☐ Yes ☐ No

54. Will the IC engine be equipped with an oxidation catalyst? ☐ Yes ☐ No

55. Will the oxidation catalyst be equipped with a temperature measurement system to ensure it is operating properly? ☐ Yes ☐ No

DEQ AIR QUALITY PROGRAM
1410 N. Hilton, Boise, ID 83706
For assistance, call the
Air Permit Hotline – 1-877-5PERMIT

Baghouse Control Equipment **Form BCE**
Revision 6
2/18/10

Complete this form for each baghouse. Please see instructions on page 2 before filling out the form.

IDENTIFICATION

1. Company Name	2. Facility Name:
Western Construction, Incorporated	Hot Plant #2

3. Brief Project Description: This is a Permit-to-Contruct application for a new, portable Hot Mix Asphalt Plant

BAGHOUSE INFORMATION

4. Baghouse Manufacturer: Gencor Industries, Inc.	5. Baghouse Model: CFP-182	6. Baghouse Equipment ID: N/A

7 (a). Baghouse particulate matter emission concentration. **Note: Provide information in 7(a)-(c) or answer question #8 below.**	0.04 gr/dscf	*Manufacturers typically provide guarantees in grains per dry standard cubic foot (gr/dscf). Provide a copy of the guarantee, or other documentation, with the application along with a description of the types of bags that must be used to achieve the emission concentration.* ***Emission concentrations less than 0.01 gr/dscf will receive additional scrutiny by DEQ and a source test of the baghouse may be required.*** *If a guarantee is not provided then you must document how you obtained the emission concentration. Without documentation the application is not complete.*
7 (b). Percentage PM_{10} Or Provide PM_{10} Emission Concentration	0.06 % _____ gr/dscf	*What percentage of the PM concentration listed in question #7(a) is PM_{10}. You must provide documentation as to how the percentage was determined (i.e per the baghouse manufacturer). Without documentation the application is not complete.*
7 (c). Baghouse flow rate	38548 dscfm	*Provide the baghouse flow rate in dry standard cubic feet per minute. Actual cubic feet per minute may be given in lieu of dscfm* ***if it is documented*** *that moisture content is insignificant. You must provide documentation as to how this flow rate was determined (i.e. per the exhaust fan manufacturer, combustion evaluation, etc.). Without documentation the application is not complete.*
8. Baghouse particulate matter control efficiency. **Note: Not needed if section #7 is completed.**	_____ % PM control _____ % PM_{10} control	*Applicant's providing the control efficiency of the baghouse must provide control efficiency for both PM and PM_{10}. Provide a copy of the control efficiency documentation with the application. Documentation must include a description of the types of bags that must be used to achieve the control efficiency. Without documentation the application is not complete.*
9. Is the baghouse equipped with a bag leak detector?	☐ Yes ☒ No	*If a bag leak detector is installed provide documentation on the leak detector, including; how the leak detector functions and what level of the output signal indicates that a bag is leaking. Without documentation the application is not complete.*

DEQ AIR QUALITY PROGRAM
1410 N. Hilton, Boise, ID 83706
For assistance, call the
Air Permit Hotline – 1-877-5PERMIT

AIR PERMIT APPLICATION

Revision 6
10/7/09

For each box in the table below, CTRL+click on the blue underlined text for instructions and information.

IDENTIFICATION	
1. Company Name: Western Construction, Incorporated	2. Facility Name: Hot Plant #2
3. Brief Project Description: This is a Permit-to-Construct application for a new, portable Hot Mix Asphalt Plant.	

APPLICABILITY DETERMINATION	
4. List applicable subparts of the New Source Performance Standards (NSPS) (40 CFR part 60). Examples of NSPS affected emissions units include internal combustion engines, boilers, turbines, etc. The applicant must thoroughly review the list of affected emissions units.	List of applicable subpart(s): 40 CFR 60, Subpart I 40 CFR 60, Subpart IIII ☐ Not Applicable
5. List applicable subpart(s) of the National Emission Standards for Hazardous Air Pollutants (NESHAP) found in 40 CFR part 61 and 40 CFR part 63. Examples of affected emission units include solvent cleaning operations, industrial cooling towers, paint stripping and miscellaneous surface coating. EPA has a web page dedicated to NESHAP that should be useful to applicants.	List of applicable subpart(s): ☑ Not Applicable
6. For each subpart identified above, conduct a complete a regulatory analysis using the instructions and referencing the example provided on the following pages. **Note** - Regulatory reviews must be submitted with sufficient detail so that DEQ can verify applicability and document in legal terms why the regulation applies. Regulatory reviews that are submitted with insufficient detail will be determined incomplete.	☑ A detailed regulatory review is provided (Follow instructions and example). ☐ DEQ has already been provided a detailed regulatory review. Give a reference to the document including the date.

IF YOU ARE UNSURE HOW TO ANSWER ANY OF THESE QUESTIONS, CALL THE AIR PERMIT HOTLINE AT 1-877-5PERMIT

It is emphasized that it is the applicant's responsibility to satisfy all technical and regulatory requirements, and that DEQ will help the applicant understand what those requirements are prior to the application being submitted but that DEQ will not perform the required technical or regulatory analysis on the applicant's behalf.

Appendix 2

Figures

CENTRA
CONSULTING INC.

1. Five – 9' x 14' Portable Cold Feed System.
2. 5' x 10' Deister Aggregate Vibrating Screen – Single Deck with Drive Mounted On A 30" x 70' Portable Aggregate Scale Conveyor with Drive, and Sample Device
3. Model 400, 9'9" x 44' Portable Insulated Ultradrum
4. Model CFP-182, 69,217 Portable Baghouse with Built-In Primary.
5. AUGER TRANSITIONS, INDIANA FINES SYSTEM, PUGMILL, BY CUSTOMER
6. 12' x ~~30'~~ 40' Portable Operator's Control Center, Motor Control Center.
7. HYCGO-100 Hot Oil Hy-Way Heater Mounted on Tank
8. One 30,000 Gallon Indirect Fired AC Portable Tank, Single Compartment, Three Recessed Top Mounted Agitators, Unloading Pump and 3" Unloading/Metering Piping.
9. Model SA1004T-21 Electric In-Line Fuel Oil Heater Shipped Loose
10. Single Piece Portable Rap System with 8' x 14' Series IV Rap Bin With 36" x 13' Feeder with VFD Drive, Lump Breaker, 30" x 37' Recycle Access Conveyor, with Drive, 4' x 8' Single Deck Screen With Drive and 24" x 58' Recycle Scale Conveyor with Drive.

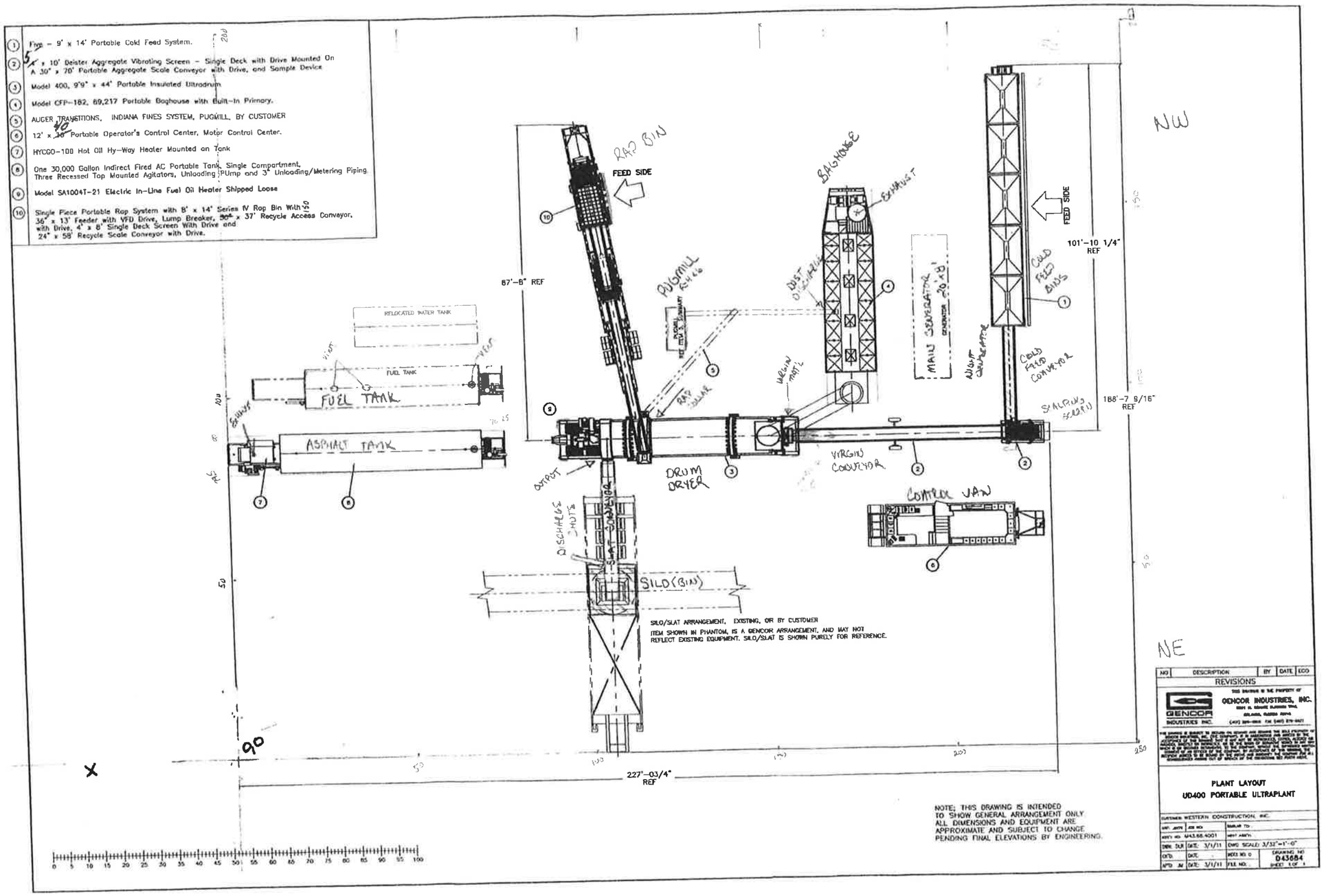

NOTE; THIS DRAWING IS INTENDED TO SHOW GENERAL ARRANGEMENT ONLY. ALL DIMENSIONS AND EQUIPMENT ARE APPROXIMATE AND SUBJECT TO CHANGE PENDING FINAL ELEVATIONS BY ENGINEERING.

NO	DESCRIPTION	BY	DATE	ECO

REVISIONS

GENCOR INDUSTRIES, INC.

PLANT LAYOUT
UD400 PORTABLE ULTRAPLANT

CUSTOMER: WESTERN CONSTRUCTION, INC.

DWG. SCALE: 3/32"=1'-0"

DRAWING NO. D43684

SHEET 1 OF 1

APPENDIX 3

Equipment/Vendor Specifications

WESTERN CONSTRUCTION, INC.

SUMMARY

Five – 9' x 14' Portable Cold Feed System with 1' Extension, 2' Bin Dividers, 24" x 7'6" Feeders with 3 HP Eddy Current Drives, 30" Collector Conveyor with 15 HP Drive and 4' Bulkheads ..... $

4' x 10' Deister Aggregate Vibrating Screen - Single Deck with 5 HP Drive Mounted on a 30" x 70' Portable Aggregate Scale Conveyor with 20 HP Drive and Sample Device .....

Model 400, 9'9" x 44' Portable Insulated Ultradrum™ with Ultra II™-135H Oil Fired Burner, Four 40 HP Drives, Feed Chute with Vibrator, Remote Controlled Calibration Chute, 15 HP Eddy Current AC Pump with Coriolis Meter, 5 HP Fuel Pump and 10 HP Blue Smoke Capture System .....

Model CFP-182, 89,217 Portable Baghouse with Built-In Primary, 1,050— 7'2" Bags, 18,134 Sq. Ft. of Cloth, 4.92:1 Air-to-Cloth Ratio and Model 542-BCS Exhaust Fan with two 125 HP Motors .....

One 14" Diameter Dust Removal Auger with 15 HP Drive, Calibration Port, and Trickle Valve .....

12' x 36' Portable Operator's Control Center, Motor Control Center, BC-250™ Process Control, Gen 3D™ Burner Control, SL-400™ Silo Loadout, Manual Controls for Aggregate, RAP, and AC, Phone Modem for Process and Loadout Controls, Gen Set Day/Night Switch, Silo Manual Panel, 150 Amp Breaker Wired to Lug Connection, ~~Three~~ Six ea 50 Amp 240 Volt Single Phase Outlets wired to 3-4 Pole, Single Phase Plugs Outside, One Starter and Breaker and Quick Disconnects for 5 HP Fuel Pump, ~~Six 240 Volt, 10 AMP Single Phase Receptacles Wired to Outside of Control Center~~, ~~One~~ 6 ea Duplex 110 Volt Single Phase Receptacle Outside,Starters and Breakers For Existing Equipment (See HP Sheet).....

HYCGO-100 Hot Oil Hy-Way™ Heater Mounted on Tank.....

One 30,000 Gallon Indirect Fired AC Portable Tank, Single Compartment, Three Recessed Top Mounted Agitators, 15 HP Unloading Pump and 3" Unloading/Metering Piping .....

Model SA1004T-21 Electric In-Line Fuel Oil Heater Shipped Loose.....

TOTAL INVESTMENT .....

NOTE: All prices F.O.B. Factory, unless otherwise stated.

[redacted]

Gencor Industries, Inc.
Proposal No. B-11-01-9835
January 19, 2011

Acceptance

PLEASE INITIAL ALL OPTIONS PURCHASED ON LINE PROVIDED

OPTIONS:

Model CFP-151 with 74,092 CFM Portable Baghouse with Built-In Primary, 872-7'2" Bags, 15,059 Sq. Ft. of Cloth, 4.92:1 Air to Cloth Ratio, Model 490-BCS Exhaust Fan with 200 HP Motor in Lieu of CFP-182 Baghouse .....Deduct $

Single Piece Portable Rap System with 8' x 14' Series IV RAP Bin with 36" x 13' Feeder with 5 HP Eddy Current Drive, 30 HP Lump Breaker, 30" x 37' Recycle Access Conveyor with 7.5 HP Drive, 4' x 8' Single Deck Screen with 5 HP Drive and 24" x 58' Recycle Scale Conveyor with 10 HP Drive .....Add $

Vector™ Burner Control in Lieu of Gen 3D™ Burner Control .....Add $

NOTES:

All wiring is SOW cable with quick disconnects.

Gencor will provide 1-1/2" flex air hose with King Nipples from air compressor to drum and 3/4" flex hose from drum to divert valves.

Gencor plant components are designed to meet or exceed all OSHA safety requirements. Gencor's guards around the Drum Dryer's trunnion rollers, up to 7' in height on the conveyor's idler rollers and head pulleys, the Baghouse's exhaust fan, etc. are designed for operator safety and to avoid possible pinch point with the rotating components. Each stairway and platform are designed to conform to these safety requirements by using appropriate handrails, stair steps, ladder rungs, and installation of required safety gates as needed. Each piece of equipment is also designed with the proper clearances and dimensions established by OSHA. If purchased stairway platforms are designed to match the width of the stairway, per OSHA standards. Each piece of safety equipment is painted in order to make them highly visible to the plant operator, allowing the operator to see the possible hazard points throughout the plant.

When using modified polymers, please consult factory for production variation.

Attachment "A"

CUSTOMER Western Construction, Inc. DATE: 03/28/11

GENCOR INDUSTRIES INC.

SIZE ULTRA-PLANT	400	TPH	BURNER FIRING RATE	98.59	MMBTU'S/HR
FINAL MIX TEMPERATURE	300	F	ENERGY REQUIRED:	246470	BTU'S/TON
VIRGIN MOISTURE	5.0	%			
TOTAL T.P.H. MIX	400				
PLANT ELEVATION	3500	FEET	ACFM thru Dryer@ 325	61,872	ACFM
DRYER OUTLET TEMP.	325	F	R.A.P. STEAM GENERATED	3660	ACFM
DRUM DIAMETER	9.75	FEET	PLANT AIR LEAKAGE (10 %)STD.	6,875	ACFM
OXYGEN IN DRYER	7.5	%	BAGHOUSE CLEANING AIR	8,000	ACFM
EXCESS AIR IN DRYER	50	%	ACFM REQ. for Baghouse & fan	71,859	ACFM
PERCENT R.A.P.	30.0	%	TOTAL ACFM@STACK EXIT TEMP	71,859	ACFM
TOTAL T.P.H. OF R.A.P.	120	T.P.H.	STACK EXIT TEMP 275		
MOISTURE IN R.A.P.	3.0	%			
VIRGIN AGG. TEMPERATURE	495	(OK)	DRUM VELOCITY EMPTY	829	FPM
ACFM OF R.A.P. STEAM	3660	(OK)	DRUM VELOCITY RUNNING	1034	FPM
GAS FLOW PER TON (DRYER)	155	ACFM			

FUEL USAGE

NATURAL GAS:

HEAT CONTENT:	1,000	BTU'S/FT^3
FUEL CONSUMPTION	98,587.8	FT^3/HR
FUEL CONSUMPTION	2.46	THERM/TON
FUEL CONSUMPTION	36.97	MMCF/YR

Waste oil:

HEAT CONTENT:	145000	BTU'S/GAL
FUEL CONSUMPTION	11.33	GAL/MIN
FUEL CONSUMPTION	679.92	GAL/HR
FUEL CONSUMPTION	1.70	GAL/TON
FUEL CONSUMPTION	254,969	GAL/YR

LIQUID PROPANE:

HEAT CONTENT:	91500	BTU'S/GAL
FUEL CONSUMPTION	17.96	GAL/MIN
FUEL CONSUMPTION	1,077.46	GAL/HR
FUEL CONSUMPTION	2.69	GAL/TON
FUEL CONSUMPTION	404,049	GAL/YR

Attachment "B"

CUSTOMER: **Western Construction, Inc.** DATE 03/28/11

SIZE OF PLANT:	400.0	TONS PER HOUR
HOURLY PRODUCTION:	400.0	TONS PER HOUR
DIAMETER OF DRYER:	9.75	FEET
LENGTH OF DRYER:	44.0	FEET
PITCH OF DRYER (.75 INCH TYPICAL)	0.75	INCH PER FOOT
DRYER SPEED:	6.53	R.P.M.
DRYER SHELL SPEED:	200.0	FEET PER MINUTE
DRUM LOAD IN CUBIC FEET:	14.85	CUBIC FEET
DRUM LOAD IN PERCENT:	19.9	PERCENT
MATERIAL DEPTH IN DRYER:	29	INCHES
% OF -200 IN COLD FEED (5% TYPICAL)	5.0	PERCENT
CALCULATED RETENTION TIME:	4.90	MINUTE
DUST LOAD IN AIR AT DRYER OUTLET:	34,400	LBS. PER HOUR
PERCENT OF DUST PICKUP AT DRYER OUTLET:	4.53	PERCENT
EXHAUST STACK INSIDE DIAMETER:	56.0	INCHES
SIZE BAGHOUSE	CFP182	BAGHOUSE

TYPE OF PRIMARY INERTIAL INERTIAL YES CYCLONE NO

MICRON SIZE	PERCENT IN AIR STREAM (%)	LOAD IN AIR STREAM (lbs./hr)	PERCENT PASSING PRIMARY (%)	LOAD IN AIR STREAM (lbs./hr)	PERCENT PASSING BAGHOUSE (%)	LOAD IN AIR STREAM (lbs./hr)
0.1	0.6	189.20	100.00	189.20	0.620	1.17
1.0	0.6	206.40	100.00	206.40	0.310	0.64
2.0	1.6	533.21	99.00	527.87	0.155	0.82
3.0	3.7	1272.82	99.00	1260.09	0.078	0.98
4.0	4.1	1410.42	99.00	1396.31	0.039	0.54
5.0	4.0	1376.02	99.00	1362.26	0.019	0.26
6.0	3.5	1204.02	99.00	1191.98	0.010	0.12
7.0	3.5	1204.02	99.00	1191.98	0.005	0.06
8.0	3.0	1032.01	99.00	1021.69	0.002	0.02
9.0	2.5	860.01	98.00	842.81	0.001	0.01
10.0	2.5	860.01	98.00	842.81		
20.0	7.5	2580.03	56.00	1444.82	+PM10	
30.0	11.0	3784.05	51.00	1929.86	0.06	8.6
40.0	8.5	2924.04	45.00	1315.82		
50.0	6.5	2236.03	44.00	983.85		
60.0	5.5	1892.02	43.00	813.57		
70.0	4.5	1548.02	42.00	650.17		
+70	27.0	9288.12	40.0	3715.25		
TOTAL (LBS./HR):		34400.4 (lbs./hr)		20886.7 (lbs./hr)		13.22 (lbs./hr)

	PRIMARY COLLECTOR	BAGHOUSE
EFFICIENCY (%)	39.3 (%)	99.937 (%)

TOTAL EFFICIENCY (%)

PRIMARY COLLECTOR & BAGHOUSE

99.96158 (%)

Attachment "C"

CUSTOMER: **Western Construction, Inc.** DATE 03/28/11

ANNUAL PRODUCTION:	661,000	Tons/Year
HOURLY PRODUCTION:	400	Tons/Hour
EXHAUST GASES - TEMPERATURE	275	Degree (F)
EXHAUST GASES - % MOISTURE	24.18	%
EXHAUST GASES - FLOW RATE	71,859	ACFM
EXHAUST GASES - FLOW RATE	51,816	SCFM
EXHAUST GASES - FLOW RATE	38,548	DSCFM
EXHAUST GASES- VELOCITY	4,201	FT/MIN
OXYGEN PERCENT by VOLUME	12.24	%
PARTICULATE EMISSIONS	10.9	TON/YEAR
PARTICULATE EMISSIONS	13.22	LBS/HOUR
PARTICULATE EMISSIONS	0.033	LBS/TON
PARTICULATE EMISSIONS	0.134	LBS/MMBTU
BAGHOUSE EFFICIENCY	99.937	%
BAGHOUSE INLET LOADING	20,887	LBS/HOUR
PERCENT OF BAGHOUSE INLET LOADING	2.75	%
BAGHOUSE OUTLET EMISSION RATE	0.040	GRAINS/DSCF
BAGHOUSE OUTLET EMISSION RATE	0.030	GRAINS/SCF
OVERALL EFFICIENCY (PRIMARY+BAGHOUSE)	99.962	%

661,000 ÷ 400 ÷ 10 HRS/DAY 165.25 DAYS

March - Oct 245 days 180 M-F 216 M-S

***Emission Factors are from AP-42 Section 11.1 Final Report**

PPM @ 7 OXYGEN	Gas		No. 2 oil	
CARBON MONOXIDE (CO):	43.0	TONS/YEAR	43.0	TONS/YEAR
CARBON MONOXIDE (CO):	52.0	LBS/HOUR	52.0	LBS/HOUR
CARBON MONOXIDE (CO):	544	PPM GAS	516	PPM OIL
CARBON MONOXIDE (CO):	0.13	*LBS/TON	0.13	*LBS/TON
CARBON MONOXIDE (CO):	0.527	LBS/MMBTU	0.527	LBS/MMBTU
**VOLATILE ORGANIC COMPOUNDS (VOC):	10.576	TONS/YEAR	10.576	TONS/YEAR
**VOLATILE ORGANIC COMPOUNDS (VOC):	12.80	LBS/HOUR	12.80	LBS/HOUR
**VOLATILE ORGANIC COMPOUNDS (VOC):	83	PPM GAS	78	PPM OIL
**VOLATILE ORGANIC COMPOUNDS (VOC):	0.0320	*LBS/TON	0.0320	*LBS/TON
**VOLATILE ORGANIC COMPOUNDS (VOC):	0.130	LBS/MMBTU	0.130	LBS/MMBTU
** (VOC) as Propane				
NITROGEN OXIDES (NOx):	8.593	TONS/YEAR	18.178	TONS/YEAR
NITROGEN OXIDES (NOx):	10.400	LBS/HOUR	22.000	LBS/HOUR
NITROGEN OXIDES (NOx):	66	PPM GAS	133	PPM OIL
NITROGEN OXIDES (NOx):	0.0260	*LBS/TON	0.0550	*LBS/TON
NITROGEN OXIDES (NOx):	0.1055	LBS/MMBTU	0.223	LBS/MMBTU
***SULFUR OXIDES (SOx):	1.124	TONS/YEAR	19.169	TONS/YEAR
***SULFUR OXIDES (SOx):	1.360	LBS/HOUR	23.200	LBS/HOUR
***SULFUR OXIDES (SOx):	6	PPM GAS	98	PPM OIL
***SULFUR OXIDES (SOx):	0.0034	*LBS/TON	0.0580	*LBS/TON
***SULFUR OXIDES (SOx):	0.0138	LBS/MMBTU	0.235	LBS/MMBTU

*** SOx as SO2

Note: EGR may be required to meet NOx requirements

TAAI 1.5 BTU John Deere Bought 1995

Attachment "D"

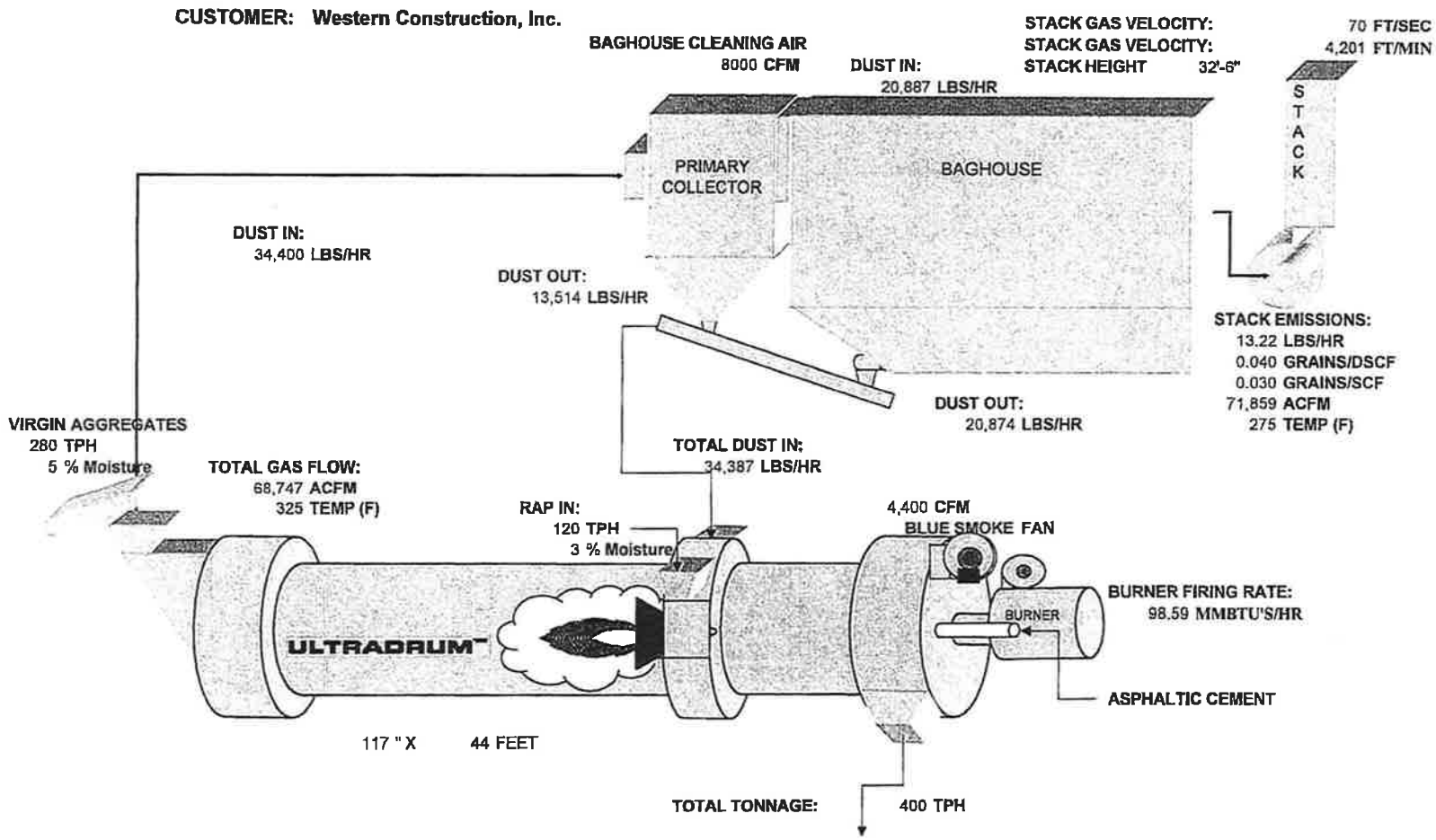

Model: DFHB
Frequency: 60
Fuel type: Diesel
KW rating: 800 standby
725 prime

› Generator set data sheet

Our energy working for you.™

Cummins® Power Generation

Exhaust emission data sheet:	EDS-186, EDS-152
Exhaust emission compliance sheet:	
Sound performance data sheet:	MSP-150
Cooling performance data sheet:	
Prototype test summary data sheet:	PTS-126
Standard set-mounted radiator cooling outline:	0500-3134
Optional set-mounted radiator cooling outline:	
Optional heat exchanger cooling outline:	
Optional remote radiator cooling outline:	

Fuel consumption

	Standby				Prime				Continuous
	kW (kVA)				kW (kVA)				kW (kVA)
Ratings	800 (1000)				725 (906)				
Load	1/4	1/2	3/4	Full	1/4	1/2	3/4	Full	Full
US gph	16.0	28.2	43.0	57.8	15.2	26.8	38.3	51.9	
L/hr	61	107	163	219	58	101	145	196	

Engine

	Standby rating	Prime rating	Continuous rating
Engine manufacturer	Cummins Inc.		
Engine model	QST30-G2		
Configuration	Cast iron, 50°V 12 cylinder		
Aspiration	Turbocharged and aftercooled		
Gross engine power output, kWm (bhp)	895.2 (1200.0)	809.4 (1085.0)	
BMEP at set rated load, kPa (psi)	1958.1 (284.0)	1772.0 (257.0)	
Bore, mm (in)	140.0 (5.51)		
Stroke, mm (in)	165.1 (6.50)		
Rated speed, rpm	1800		
Piston speed, m/s (ft/min)	9.9 (1949.0)		
Compression ratio	14.0:1		
Lube oil capacity, L (qt)	132.5 (140.0)		
Overspeed limit, rpm	2100 ± 50		
Regenerative power, kW	110.00		

Fuel flow

Fuel flow at rated load, L/hr (US gph)	382.3 (101.0)	
Maximum inlet restriction, mm Hg (in Hg)	101.6 (4.0)	
Maximum return restriction, mm Hg (in Hg)	254.0 (10.0)	

©2008 | Cummins Power Generation Inc. | All rights reserved | Specifications subject to change without notice | Cummins Power Generation and Cummins are registered trademarks of Cummins Inc. "Our energy working for you." is a trademark of Cummins Power Generation.
D-3409a (10/08)

Air	Standby rating	Prime rating	Continuous rating
Combustion air, m^3/min (scfm)	69.1 (2440.0)	64.2 (2270.0)	
Maximum air cleaner restriction, kPa (in H_2O)	6.2 (25.0)		
Alternator cooling air, m^3/min (scfm)	117.6 (4156.0)		

Exhaust

Exhaust flow at set rated load, m^3/min (cfm)	186.9 (6603.0)	167.5 (5917.0)	
Exhaust temperature, °C (°F)	495.6 (924.0)	467.2 (873.0)	
Maximum back pressure, kPa (in H_2O)	10.2 (41.0)		

Standard set-mounted radiator cooling

Ambient design, °C (°F)	40 (104)		
Fan load, kW_m (HP)	32.1 (43.0)		
Coolant capacity (with radiator), L (US gal)	200.6 (53.0)		
Cooling system air flow, m^3/min (scfm)	962.2 (34000)		
Total heat rejection, MJ/min (Btu/min)	41.9 (39575)	38.1 (35955)	
Maximum cooling air flow static restriction, kPa (in H_2O)	0.12 (0.5)		

Optional set-mounted radiator cooling

Ambient design, °C (°F)			
Fan load, kW_m (HP)			
Coolant capacity (with radiator), L (US gal)			
Cooling system air flow, m^3/min (scfm)			
Total heat rejection, MJ/min (Btu/min)			
Maximum cooling air flow static restriction, kPa (in H_2O)			

Optional heat exchanger cooling

Set coolant capacity, L (US gal)			
Heat rejected, jacket water circuit, MJ/min (Btu/min)			
Heat rejected, aftercooler circuit, MJ/min (Btu/min)			
Heat rejected, fuel circuit, MJ/min (Btu/min)			
Total heat radiated to room, MJ/min (Btu/min)			
Maximum raw water pressure, jacket water circuit, kPa (psi)			
Maximum raw water pressure, aftercooler circuit, kPa (psi)			
Maximum raw water pressure, fuel circuit, kPa (psi)			
Maximum raw water flow, jacket water circuit, L/min (US gal/min)			
Maximum raw water flow, aftercooler circuit, L/min (US gal/min)			
Maximum raw water flow, fuel circuit, L/min (US gal/min)			
Minimum raw water flow at 27 °C (80 °F) inlet temp, jacket water circuit, L/min (US gal/min)			
Minimum raw water flow at 27 °C (80 °F) inlet temp, aftercooler circuit, L/min (US gal/min)			
Minimum raw water flow at 27 °C (80 °F) inlet temp, fuel circuit, L/min (US gal/min)			
Raw water delta P at min flow, jacket water circuit, kPa (psi)			
Raw water delta P at min flow, aftercooler circuit, kPa (psi)			
Raw water delta P at min flow, fuel circuit, kPa (psi)			
Maximum jacket water outlet temp, °C (°F)			
Maximum aftercooler inlet temp, °C (°F)			
Maximum aftercooler inlet temp at 25 °C (77 °F) ambient, °C (°F)			

Our energy working for you.™

www.cumminspower.com

©2008 | Cummins Power Generation Inc. | All rights reserved | Specifications subject to change without notice | Cummins Power Generation and Cummins are registered trademarks of Cummins Inc. "Our energy working for you." is a trademark of Cummins Power Generation.
D-3409a (10/08)

Power Generation

Optional remote radiator cooling[1]

	Standby rating	Prime rating	Continuous rating
Set coolant capacity, L (US gal)			
Max flow rate at max friction head, jacket water circuit, L/min (US gal/min)			
Max flow rate at max friction head, aftercooler circuit, L/min (US gal/min)			
Heat rejected, jacket water circuit, MJ/min (Btu/min)			
Heat rejected, aftercooler circuit, MJ/min (Btu/min)			
Heat rejected, fuel circuit, MJ/min (Btu/min)			
Total heat radiated to room, MJ/min (Btu/min)			
Maximum friction head, jacket water circuit, kPa (psi)			
Maximum friction head, aftercooler circuit, kPa (psi)			
Maximum static head, jacket water circuit, m (ft)			
Maximum static head, aftercooler circuit, m (ft)			
Maximum jacket water outlet temp, °C (°F)			
Maximum aftercooler inlet temp at 25 °C (77 °F) ambient, °C (°F)			
Maximum aftercooler inlet temp, °C (°F)			
Maximum fuel flow, L/hr (US gph)			
Maximum fuel return line restriction, kPa (in Hg)			

Weights[2]

Unit dry weight kgs (lbs)	7676 (16922)
Unit wet weight kgs (lbs)	7973 (17578)

Notes:

[1] For non-standard remote installations contact your local Cummins Power Generation representative.

[2] Weights represent a set with standard features. See outline drawing for weights of other configurations.

Derating factors

Standby	Engine power available up to 1524 m (5000 ft) at ambient temperatures up to 35 °C (95 °F). Above 1524 m (5000 ft), derate at 4% per 305 m (1000 ft), and 2% per 11 °C (1% per 10 °F) above 35 °C (95 °F).
Prime	
Continuous	

Ratings definitions

Emergency standby power (ESP):	**Limited-time running power (LTP):**	**Prime power (PRP):**	**Base load (continuous) power (COP):**
Applicable for supplying power to varying electrical load for the duration of power interruption of a reliable utility source. Emergency Standby Power (ESP) is in accordance with ISO 8528. Fuel Stop power in accordance with ISO 3046, AS 2789, DIN 6271 and BS 5514.	Applicable for supplying power to a constant electrical load for limited hours. Limited Time Running Power (LTP) is in accordance with ISO 8528.	Applicable for supplying power to varying electrical load for unlimited hours. Prime Power (PRP) is in accordance with ISO 8528. Ten percent overload capability is available in accordance with ISO 3046, AS 2789, DIN 6271 and BS 5514.	Applicable for supplying power continuously to a constant electrical load for unlimited hours. Continuous Power (COP) is in accordance with ISO 8528, ISO 3046, AS 2789, DIN 6271 and BS 5514.

Our energy working for you.™

www.cumminspower.com

©2008 | Cummins Power Generation Inc. | All rights reserved | Specifications subject to change without notice | Cummins Power Generation and Cummins are registered trademarks of Cummins Inc. "Our energy working for you." is a trademark of Cummins Power Generation.
D-3409a (10/08)

Power Generation

Alternator data

Three phase table[1]		105 °C	105 °C	125 °C	125 °C	125 °C	125 °C	125 °C	125 °C			
Feature code		B259	B301	B258	B252	B282	B246	B276	B300			
Alternator data sheet number		312	311	311	310	311	309	309	309			
Voltage ranges		110/190 thru 139/240 220/380 thru 277/480	347/600	110/190 thru 139/240 220/380 thru 277/480	120/208 thru 139/240 240/416 thru 277/480	220/380 thru 277/480	277/480	277/480	347/600			
Surge kW		823	825	818	819	818	817	817	817			
Motor starting kVA (at 90% sustained voltage)	Shunt											
	PMG	4234	3866	3866	3313	3866	2944	2944	2944			

Full load current amps at standby rating	120/208	139/240	220/380	230/400	240/416	277/480	347/600
	2776	2406	1519	1443	1388	1203	962

[1] Single phase power can be taken from a three phase generator set at up to 40% of the generator set nameplate kW rating at unity power factor.

Formulas for calculating full load currents:

Three phase output

$$\frac{\text{kW} \times 1000}{\text{Voltage} \times 1.73 \times 0.8}$$

Single phase output

$$\frac{\text{kW} \times \text{SinglePhaseFactor} \times 1000}{\text{Voltage}}$$

Cummins Power Generation
1400 73rd Avenue N.E.
Minneapolis, MN 55432 USA
Phone: 763 574 5000
Fax: 763 574 5298

Warning: Back feed to a utility system can cause electrocution and/or property damage. Do not connect to any building's electrical system except through an approved device or after building main switch is open.

Our energy working for you.™

www.cumminspower.com

©2008 | Cummins Power Generation Inc. | All rights reserved | Specifications subject to change without notice | Cummins Power Generation and Cummins are registered trademarks of Cummins Inc. "Our energy working for you." is a trademark of Cummins Power Generation.
D-3409a (10/08)

Power Generation

Diesel generator set QST30 series engine

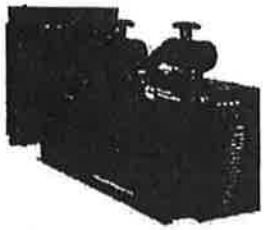

> Specification sheet
620 kW - 1000 kW standby

Our energy working for you.™

Power Generation

Description

Cummins Power Generation commercial generator sets are fully integrated power generation systems providing optimum performance, reliability and versatility for stationary standby and prime power applications.

This generator set is designed in facilities certified to ISO 9001 and manufactured in facilities certified to ISO 9001 or ISO 9002.

The Prototype Test Support (PTS) program verifies the performance integrity of the generator set design. Cummins Power Generation products bearing the PTS symbol meet the prototype test requirements of NFPA 110 for Level 1 systems.

All low voltage models are CSA certified to product class 4215-01.

The generator set is available Listed to UL 2200, Stationary Engine Generator Assemblies. The PowerCommand control is Listed to UL 508 - Category NITW7 for U.S. and Canadian usage. Circuit breaker assemblies are UL 489 Listed for 100% continuous operation and also UL 869A Listed Service Equipment.

Features

Cummins® heavy-duty engine - Rugged 4-cycle, industrial diesel delivers reliable power, low emissions and fast response to load changes.

Alternator - Several alternator sizes offer selectable motor starting capability with low reactance 2/3 pitch windings, low waveform distortion with non-linear loads and fault clearing short-circuit capability.

Permanent magnet generator (PMG) - Offers enhanced motor starting and fault clearing short-circuit capability.

Control system - The PowerCommand® electronic control is standard equipment and provides total genset system integration including automatic remote starting/stopping, precise frequency and voltage regulation, alarm and status message display, AmpSentry™ protection, output metering, auto-shutdown at fault detection and NFPA 110 Level 1 compliance.

Cooling system - Standard integral set-mounted radiator system, designed and tested for rated ambient temperatures, simplifies facility design requirements for rejected heat.

Enclosures - Optional weather protective and sound attenuated enclosures are available.

Structural steel skid base - Robust skid base supports the engine, alternator and radiator.

NFPA - The genset accepts full rated load in a single step in accordance with NFPA 110 for Level 1 systems.

Warranty and service - Backed by a comprehensive warranty and worldwide distributor network.

	Standby rating		Prime rating		Continuous rating		Data sheets	
Model	60 Hz kW (kVA)	50 Hz kW (kVA)	60 Hz kW (kVA)	50 Hz kW (kVA)	60 Hz kW (kVA)	50 Hz kW (kVA)	60 Hz	50 Hz
DFHA	750 (938)	620 (775)	680 (850)	560 (700)			D-3408	D-3412
DFHB	800 (1000)	700 (875)	725 (906)	640 (800)			D-3409	D-3413
DFHC	900 (1125)	800 (1000)	818 (1023)	725 (906)			D-3410	D-3414
DFHD	1000 (1250)	880 (1100)	900 (1125)	800 (1000)			D-3411	D-3415

©2008 | Cummins Power Generation Inc. | All rights reserved | Specifications subject to change without notice | Cummins Power Generation and Cummins are registered trademarks of Cummins Inc. PowerCommand, AmpSentry InPower and "Our energy working for you." are trademarks of Cummins Power Generation. Other company, product or service names may be trademarks or service marks of others.
S-1583a (9/08)

Generator set specifications

Governor regulation class	ISO 8528 Part 1 Class G3
Voltage regulation, no load to full load	± 0.5%
Random voltage variation	± 0.5%
Frequency regulation	Isochronous
Random frequency variation	± 0.25%
Radio frequency emissions compliance	IEC 801.2 through IEC 801.5; MIL-STD-461C, Part 9 Radiated Emissions (EMI)

Engine specifications

Bore	140.0 mm (5.51 in)
Stroke	165.1 mm (6.50 in)
Displacement	30.5 L (1860.0 in^3)
Configuration	Cast iron, V 12 cylinder
Battery capacity	1280 amps minimum at ambient temperature of 0 °C (32 °F)
Battery charging alternator	35 amps
Starting voltage	24 volt, negative ground
Fuel system	Direct injection: number 2 diesel fuel, fuel filter; automatic electric fuel shutoff
Fuel filter	
Air cleaner type	
Lube oil filter type(s)	Four spin-on, full flow; two bypass filters
Standard cooling system	High ambient radiator

Alternator specifications

Design	Brushless, 4 pole, drip proof revolving field
Stator	2/3 pitch
Rotor	Direct coupled, flexible disc
Insulation system	Class H on low voltage, Class F on medium and high voltage
Standard temperature rise	125 °C standby at 40 °C ambient
Exciter type	PMG (Permanent magnet generator)
Phase rotation	A (U), B (V), C (W)
Alternator cooling	Direct drive centrifugal blower
AC waveform total harmonic distortion	< 5% no load to full linear load, < 3% for any single harmonic
Telephone influence factor (TIF)	< 50 per NEMA MG1-22.43
Telephone harmonic factor (THF)	< 3

Available voltages

60 Hz 3-phase				50 Hz 3-phase		
Reconnectable		Non-Reconnectable		Reconnectable		
• 120/208	• 139/240	• 220/380	• 230/400	• 120/208	• 220/380	• 230/400
• 220/380	• 230/400	• 240/416	• 277/480	• 240/416		
• 240/416	• 277/480	• 347/600				

Note: Consult factory for other voltages.

Generator set options and accessories

Engine
- ☐ 208/240/480 V thermostatically controlled coolant heater for ambient above 4.5 °C (40 °F)
- ☐ 208/240/480 V thermostatically controlled coolant heater for ambient below 4.5 °C (40 °F)
- ☐ Fuel/water separator
- ☐ Heavy duty air cleaner with service indicator

Control panel
- ☐ 120/240 V 100 W control anti-condensation heater
- ☐ Exhaust pyrometer
- ☐ Ground fault indication
- ☐ Paralleling configuration
- ☐ Paralleling upgrade configuration
- ☐ Remote fault signal package
- ☐ Run relay package

Alternator
- ☐ 80 °C rise
- ☐ 105 °C rise
- ☐ 120/240 V 300 W anti-condensation heater

Exhaust system
- ☐ Critical grade exhaust silencer
- ☐ Industrial grade exhaust silencer
- ☐ Residential grade exhaust silencer

Cooling system
- ☐ Heat exchanger
- ☐ High ambient 50 °C radiator
- ☐ Remote radiator

Generator set
- ☐ AC entrance box
- ☐ Battery
- ☐ Battery charger
- ☐ Export box packaging
- ☐ Main line circuit breaker
- ☐ PowerCommand Network
- ☐ Remote annunciator panel
- ☐ Spring isolators
- ☐ 2 year prime power warranty
- ☐ 2 year standby power warranty
- ☐ 5 year basic power warranty
- ☐ 10 year major components warranty

Note: Some options may not be available on all models - consult factory for availability.

Our energy working for you.™

www.cumminspower.com

©2008 | Cummins Power Generation Inc. | All rights reserved | Specifications subject to change without notice | Cummins Power Generation and Cummins are registered trademarks of Cummins Inc. PowerCommand, AmpSentry, InPower and "Our energy working for you." are trademarks of Cummins Power Generation. Other company, product or service names may be trademarks or service marks of others.
S-1583a (9/08)

Power Generation

Control system PCC 3100

PowerCommand control is an integrated generator set control system providing governing, voltage regulation, engine protection and operator interface functions. Major features include:

- Integral AmpSentry™ protection providing a full range of alternator protection functions that are matched to the alternator provided.
- Battery monitoring and testing features and smart starting control system.
- Three phase sensing, full wave rectified voltage regulation system, with a PWM output for stable operation with all load types.
- Optional Echelon® LONWORKS® network interface.
- Control suitable for operation in ambient temperatures from -40 °C to +70 °C (-40 °F to +158 °F) and altitudes to 5000 meters (13,000 feet).
- Prototype tested; UL, CSA, and CE compliant.
- InPower™ PC-based service tool available for detailed diagnostics.

Operator/display panel

- Run/off/auto mode switch
- Panel lamp test switch
- Emergency stop switch
- Alpha-numeric display with pushbutton access for viewing engine and alternator data and providing setup, controls and adjustments
- LED lamps indicating genset not in auto, common warning, common shutdown
- Configurable for local language
- Analog AC ammeter, volt meter, frequency motor, kW motor

Engine protection

- Overspeed shut down
- Low oil pressure warning and shut down
- High coolant temperature warning and shut down
- High oil temperature warning (some models)
- Low coolant level warning or shut down
- Low coolant temperature warning
- High and low battery voltage warning
- Weak battery warning
- Dead battery shut down
- Fail to start (overcrank) shut down
- Fail to crank shut down
- Redundant start disconnect
- Cranking lockout
- Sensor failure indication

Engine data

- DC voltage
- Lube oil pressure
- Coolant temperature
- Lube oil temperature (some models)
- Engine speed

AmpSentry AC protection

- Over current and short-circuit shut down
- Over current warning
- Single and three phase fault regulation
- Over and under voltage shut down
- Over and under frequency shut down
- Overload warning with alarm contact
- Reverse power and reverse Var shut down
- Excitation fault

Alternator data

- Line-to-line and line-to-neutral AC volts
- Three phase AC current
- Frequency
- Total power factor, kW and kVA

Other data

- Genset model data
- Starts, running hours
- kW hours (total)
- Fault history
- Load profile (accessible with InPower)

Governing

- Digital electronic isochronous governor
- Temperature dynamic governing
- Smart idle speed mode
- Glow plug control (some models)

Voltage regulation

- Digital PWM electronic voltage regulation
- Three phase line-to-neutral sensing
- Suitable for PMG excitation
- Single and three phase fault regulation
- Configurable torque matching

Control functions

- Data logging on faults
- Fault simulation (requires InPower)
- Time delay start and cooldown
- Cycle cranking
- Configurable customer inputs (4)
- Remote emergency stop

Paralleling (Option)

- Active digital phase lock loop synchronizer
- Isochronous kW and kVar load sharing controls
- kW import/export and kVar/PF control for utility (mains) paralleling

Options

- ☐ Key-type mode switch
- ☐ Ground fault module
- ☐ Auxiliary relays (3)
- ☐ Echelon LONWORKS interface
- ☐ Paralleling
- ☐ Modion Gateway to convert to Modbus (loose)
- ☐ PowerCommand iWatch web server for remote monitoring and alarm notification (loose)
- ☐ Digital input and output module(s) (loose)
- ☐ Remote annunciator (loose)

For further detail see document S-1025.

Our energy working for you.™

www.cumminspower.com

©2008 | Cummins Power Generation Inc. | All rights reserved | Specifications subject to change without notice | Cummins Power Generation and Cummins are registered trademarks of Cummins Inc. PowerCommand, AmpSentry, InPower and "Our energy working for you." are trademarks of Cummins Power Generation. Other company, product or service names may be trademarks or service marks of others.
S-1583a (9/08)

Power Generation

Ratings definitions

Emergency standby power (ESP):
Applicable for supplying power to varying electrical load for the duration of power interruption of a reliable utility source. Emergency Standby Power (ESP) is in accordance with ISO 8528. Fuel Stop power in accordance with ISO 3046, AS 2789, DIN 6271 and BS 5514.

Limited-time running power (LTP):
Applicable for supplying power to a constant electrical load for limited hours. Limited Time Running Power (LTP) is in accordance with ISO 8528.

Prime power (PRP):
Applicable for supplying power to varying electrical load for unlimited hours. Prime Power (PRP) is in accordance with ISO 8528. Ten percent overload capability is available in accordance with ISO 3046, AS 2789, DIN 6271 and BS 5514.

Base load (continuous) power (COP):
Applicable for supplying power continuously to a constant electrical load for unlimited hours. Continuous Power (COP) in accordance with ISO 8528, ISO 3046, AS 2789, DIN 6271 and BS 5514.

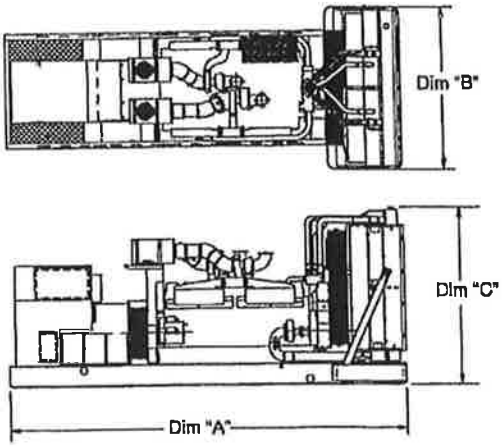

This outline drawing is for reference only. See respective model data sheet for specific model outline drawing number.

Do not use for installation design

Model	Dim "A" mm (in.)	Dim "B" mm (in.)	Dim "C" mm (in.)	Set Weight* dry kg (lbs)	Set Weight* wet kg (lbs)
DFHA	4260 (167.7)	1743 (68.6)	2328 (91.7)	7676 (16922)	7973 (17578)
DFHB	4260 (167.7)	1743 (68.6)	2328 (91.7)	7676 (16922)	7973 (17578)
DFHC	4260 (167.7)	1743 (68.6)	2328 (91.7)	7540 (16622)	7837 (17278)
DFHD	4361 (171.7)	2000 (78.7)	2353 (92.6)	7676 (16922)	7973 (17578)

* Weights represent a set with standard features. See outline drawings for weights of other configurations.

Cummins Power Generation
1400 73rd Avenue N.E.
Minneapolis, MN 55432 USA
Telephone: 763 574 5000
Fax: 763 574 5298

Warning: Back feed to a utility system can cause electrocution and/or property damage. Do not connect to any building's electrical system except through an approved device or after building main switch is open.

Our energy working for you.™

www.cumminspower.com

©2008 | Cummins Power Generation Inc. | All rights reserved | Specifications subject to change without notice | Cummins Power Generation and Cummins are registered trademarks of Cummins Inc. PowerCommand, AmpSentry, InPower and "Our energy working for you." are trademarks of Cummins Power Generation. Other company, product or service names may be trademarks or service marks of others.
S-1583a (9/08)

Power Generation

Power Generation

Exhaust Emission Data Sheet

800DFHB

60 Hz Diesel Generator Set

ENGINE

Model: Cummins QST30-G2
Type: 4 Cycle, 50°V 12 Cylinder Diesel
Aspiration: Turbocharged and Aftercooled
Compression Ratio: 14:1
Emission Control Device: Turbocharger and Aftercooler

Bore: 5.51 in. (140 mm)
Stroke 6.5 in. (165 mm)
Displacement: 1860 cu. in. (30.5 liters)

PERFORMANCE DATA	STANDBY	PRIME
BHP @ 1800 RPM (60 Hz)	1200	1085
Fuel Consumption (gal/Hr)	57.8	51.9
Exhaust Gas Flow (CFM) SCFM - ACFM → pdblowers.com	6603	5917 ⇒ 6040.84
Exhaust Gas Temperature (°F)	924	873

EXHAUST EMISSION DATA

(All Values are Grams per HP-Hour)

COMPONENT	STANDBY	PRIME
HC (Total Unburned Hydrocarbons)	0.35	0.23
NOx (Oxides of Nitrogen as NO2)	7.70	8.08
CO (Carbon Monoxide)	0.16	0.12
PM (Particulate Matter)	0.13	0.09
SO_2 (Sulfur Dioxide)	0.60	0.59

TEST CONDITIONS

Data was recorded during steady-state rated engine speed (± 25 RPM) with full load (± 2%).
Pressures, temperatures, and emission rates were stablized.

Fuel Specification:	ASTM D975 No. 2-D diesel fuel with 0.03-0.05% sulfur content (by weight), and 40-48 cetane number.
Fuel Temperature:	99 ± 9 ° F (at fuel pump inlet)
Intake Air Temperature:	77 ± 9 ° F
Barometric Pressure:	29.6 ± 1 in. Hg
Humidity:	NOx measurement corrected to 75 grains H2O/lb dry air
Reference Standard:	ISO 8178

The NOx, HC, CO and PM emission data tabulated here were taken from a single engine under the test conditions shown above. Data for the other components are estimated. These data are subject to instrumentation and engine-to-engine variability. Field emissions test data are not guaranteed to these levels. Actual field test results may vary due to test site conditions, installation,fuel specification, test procedures and instrumentation. Engine operation with excessive air intake or exhaust restriction beyond published maximum limits, or with improper maintenance, may result in elevated emission levels.

UNITED STATES ENVIRONMENTAL PROTECTION AGENCY
WASHINGTON, DC 20460

2006 Model Year Certificate of Conformity

Manufacturer:	**CUMMINS INC.**		
Engine Family:	**6CEXL030.AAD**		
Certificate Number:	**CEX-NRCI-06-40**		
Intended Service Class:	**NR 9 (>560)**		
Fuel Type:	**DIESEL**		
FELs:	NMHC+NOx: **N/A**	NOx: **N/A**	PM: **N/A**
Effective Date:	**12/30/2005**		
Date Issued:	DEC 30 2005		

Merrylin Zaw-Mon, Director
Compliance and Innovative Strategies Division
Office of Transportation and Air Quality

Pursuant to Section 213 of the Clean Air Act (42 U.S.C. section 7547) and 40 CFR Part 89, and subject to the terms and conditions prescribed in those provisions, this certificate of conformity is hereby issued with respect to the test engines which have been found to conform to applicable requirements and which represent the following nonroad engines, by engine family, more fully described in the documentation required by 40 CFR Part 89 and produced in the stated model year.

This certificate of conformity covers only those new nonroad compression-ignition engines which conform in all material respects to the design specifications that applied to those engines described in the documentation required by 40 CFR Part 89 and which are produced during the model year stated on this certificate of the said manufacturer, as defined in 40 CFR Part 89.

It is a term of this certificate that the manufacturer shall consent to all inspections described in 40 CFR 89.129-96 and 89.506-96 and authorized in a warrant or court order. Failure to comply with the requirements of such a warrant or court order may lead to revocation or suspension of this certificate for reasons specified in 40 CFR Part 89. It is also a term of this certificate that this certificate may be revoked or suspended or rendered void ab initio for other reasons specified in 40 CFR Part 89.

This certificate does not cover nonroad engines sold, offered for sale, or introduced, or delivered for introduction, into commerce in the U.S. prior to the effective date of the certificate.

Test Information Form

Manufacturer: **Cummins Inc.**

Engine category: **Nonroad CI**

Cert contact: **Don R Welliver**

1. EPA Standard Engine Family: 6CEXL030.AAD
2. Process Code: New Submission
3. Test Data Set: 1
4. Engine Code: 1175:FR5247
5. Engine Model: QST30-C
6. Displacement(s) (cid Or Liters): 30L
7. Engine I.d. Number: 37219339
8. Rated HP @ Rated RPM: 1490 @ 1800
9. Torque (ft-lb) @ Engine RPM: N/A @ N/A
10. WAIVERs:

CO	PM	Smoke	Idle Co
NA	NA	NA	NA

11. Cold Start? No
12. Certification Fuel: Diesel (Part 89,Sub D,Appdx A,Table 4)
13. Special Test Device No
14. Test Procedure: **Nonroad, D2 (Special Procedure)**

15. Official Test Results

Date: **9/28/2005**

	Test 1	Test 2	Test 3
HC/OMHCE			
NMHC/OMNMHCE	0.30		
HC + NOx			
CARBON MONOXIDE	0.63		
OXIDE OF NITROGEN	5.83		
PARTICULATE	0.110		
FORMALDEHYDE			
ACCELERATION (%opacity)			
LUGGING (Gen) (%opacity)			
PEAK (%opacity)			
IDLE CO %			
CO2			

16. Deterioration Factors

0.000
0.070
0.030
0.000

17. Certification Levels (Rounded Test Results)

Units-- g/kW-hr --Units

		STDs g/BHP-hr	STDs g/kW-hr	FELs
HC/OMHCE				
NMHC/OMNMHCE				
NMHC + NOx	6.2	4.8	6.4	
CARBON MONOXIDE	0.7	2.6	3.5	
OXIDE OF NITROGEN				
PARTICULATE	0.11	.15	0.20	
FORMALDEHYDE				
ACCELERATION (%opacity)		20		
LUGGING (Gen) (%opacity)		15		
PEAK (%opacity)		50		
IDLE CO%				

California Environmental Protection Agency AIR RESOURCES BOARD	CUMMINS INC.	EXECUTIVE ORDER U-R-002-0335 New Off-Road Compression-Ignition Engines

Pursuant to the authority vested in the Air Resources Board by Sections 43013, 43018, 43101, 43102, 43104 and 43105 of the Health and Safety Code; and

Pursuant to the authority vested in the undersigned by Sections 39515 and 39516 of the Health and Safety Code and Executive Order G-02-003;

IT IS ORDERED AND RESOLVED: That the following compression-ignition engine and emission control system produced by the manufacturer are certified as described below for use in off-road equipment. Production engines shall be in all material respects the same as those for which certification is granted.

MODEL YEAR	ENGINE FAMILY	DISPLACEMENT (liters)	FUEL TYPE	USEFUL LIFE (hours)
2006	6CEXL030.AAD	30.0	Diesel	8000

SPECIAL FEATURES & EMISSION CONTROL SYSTEMS	TYPICAL EQUIPMENT APPLICATION
Direct Diesel Injection, Turbocharger, Charge Air Cooler	Generator

The engine models and codes are attached.

The following are the exhaust certification standards (STD) and certification levels (CERT) for hydrocarbon (HC), oxides of nitrogen (NOx), or non-methane hydrocarbon plus oxides of nitrogen (NMHC+NOx), carbon monoxide (CO), and particulate matter (PM) in grams per kilowatt-hour (g/kw-hr), and the opacity-of-smoke certification standards and certification levels in percent (%) during acceleration (Accel), lugging (Lug), and the peak value from either mode (Peak) for this engine family (Title 13, California Code of Regulations, (13 CCR) Section 2423):

RATED POWER CLASS	EMISSION STANDARD CATEGORY		EXHAUST (g/kw-hr)					OPACITY (%)		
			HC	NOx	NMHC+NOx	CO	PM	ACCEL	LUG	PEAK
kW > 560	Tier 2	STD	N/A	N/A	6.4	3.5	0.20	N/A	N/A	N/A
		CERT	–	–	6.2	0.7	0.11	–	–	–

BE IT FURTHER RESOLVED: That for the listed engine models, the manufacturer has submitted the information and materials to demonstrate certification compliance with 13 CCR Section 2424 (emission control labels), and 13 CCR Sections 2425 and 2426 (emission control system warranty).

Engines certified under this Executive Order must conform to all applicable California emission regulations.

This Executive Order is only granted to the engine family and model-year listed above. Engines in this family that are produced for any other model-year are not covered by this Executive Order.

Executed at El Monte, California on this 5th day of January 2006.

for Allen Lyons, Chief
Mobile Source Operations Division

Engine Model Summary Form

Manufacturer: **Cummins Inc.**

Engine category: **Nonroad CI**

EPA Engine Family: **6CEXL030.AAD**

Mfr Family Name: **D573**

Process Code: **New Submission**

U-R-002-0335

1.Engine Code	2.Engine Model	3.BHP @ RPM (SAE Gross)	4.Fuel Rate: mm/stroke @ peak HP (for diesel only)	5.Fuel Rate: (lbs/hr) @ peak HP (for diesels only)	6.Torque @ RPM (SEA Gross)	7.Fuel Rate: mm/stroke @ peak torque	8.Fuel Rate: (lbs/hr) @ peak torque	9.Emission Control Device Per SAE J1930
175 FR5247	QST30-G	1523 @ 1800	436	529.2	N/A	N/A	N/A	DOC, TC, EGR

Engine Model Summary Form

Manufacturer: **Cummins Inc.**

Engine category: **Nonroad CI**

EPA Engine Family: **6CEXL030.AAD**

Mfr Family Name: **D573**

Process Code: **New Submission**

1.Engine Code	2.Engine Model	3.BHP@RPM (SAE Gross)	4.Fuel Rate: mm/stroke @ peak HP (for diesel only)	5.Fuel Rate: (lbs/hr) @ peak HP (for diesels only)	6.Torque @ RPM (SEA Gross)	7.Fuel Rate: mm/stroke@peak torque	8.Fuel Rate: (lbs/hr)@peak torque	9.Emission Control Device Per SAE J1930
1175:FR5247	QST30-G	1490@1800	426	517.1	N/A	N/A	N/A	N/A
1704:FR5250	QST30-G	1490@1800	426	517.1	N/A	N/A	N/A	N/A

PowerTech
4045D Diesel Engine
Generator Drive Engine Specifications

JOHN DEERE

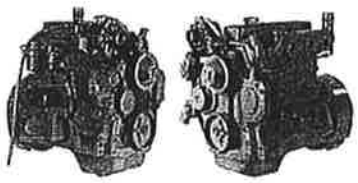

4045D shown

Dimensions

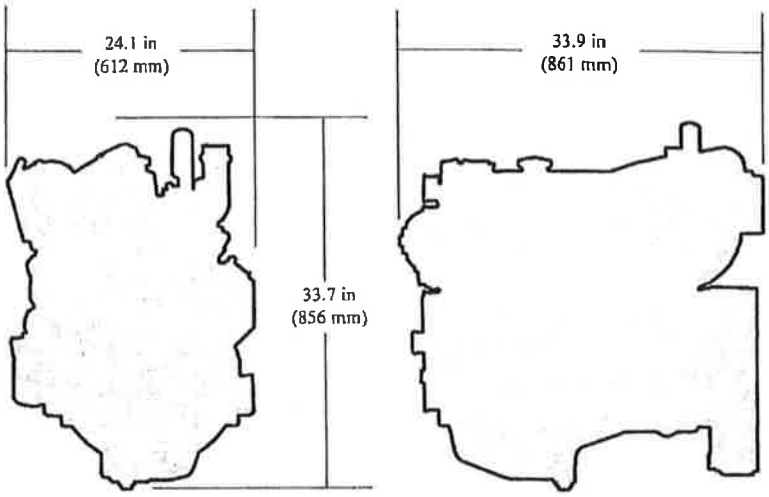

Certifications

CARB
EPA Tier 2

General engine data

Model	4045DF270	Aspiration	Naturally aspirated
Number of cylinders	4	Length - mm (in)	861 (33.9)
Displacement - L (cu in)	4.5 (275)	Width - mm (in)	612 (24.1)
Bore and Stroke-- mm (in)	106 x 127 (4.17 x 5.00)	Height-- mm (in)	856 (33.7)
Compression Ratio	17.6:1	Weight, dry-- kg (lb)	387 (853)
Engine Type	In-line, 4-Cycle		

Performance data

Prime power at 60 Hz (1800 rpm)	46 kW (62 hp)
Standby power at 60 Hz (1800 rpm)	50 kW (67 hp)

The prime power gen-set engine rating is the nominal power an engine is capable of delivering with a variable load for an unlimited number of hours per year with normal maintenance intervals observed. This rating incorporates a 10% overload capability which is available for up to 2 hours at a time. Operating time between 100% and 110% of the prime power rating is not to exceed 8% of the total engine operating time. This rating conforms to ISO 8528-1 "prime power (PRP)". The permissible average power for the prime or PRP rating is not to exceed 70% of rated prime power when calculated per ISO 8528-1.

The standby gen-set engine rating is the nominal engine power available at varying load factors for up to 200 hours per year with normal maintenance intervals observed. No overload capability is available for this rating. This rating conforms to ISO 8528-1 "Emergency Standby Power (ESP)". The permissible average power for the standby or ESP rating is calculated per ISO 8528-1.

Photographs may show non-standard equipment.

Performance curve

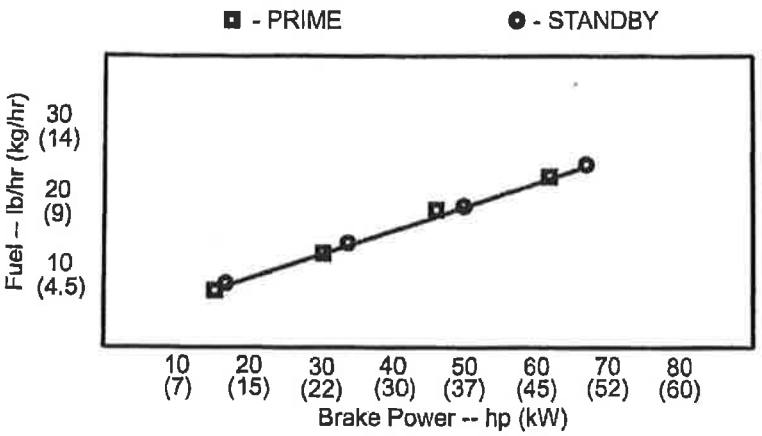

Performance data

Hz (rpm)	Generator efficiency %	Rated fan power		Power factor	Calculated generator set output			
					Prime		Standby	
		kW	hp		kWe	kVa	kWe	kVa
60 (1800)	88-92	2.5	3.4	0.8	38-40	48-50	42-44	52-55

Features and benefits

Dynamically Balanced Crankshaft

- Induction-hardened journals for long hours of reliable service
- Robust design to drive machinery from the front of the crankshaft
- Supported by five main bearings

Forged-Steel Connecting Rods

- 45-degree connecting rod/cap-joint design allows the use of large connecting rod bearings for increased durability

Replaceable Wet-type Cylinder Liners

- Provide excellent heat dissipation
- Precision machined for long life
- Rebuild to original specifications

Compact Size

- Short length is ideal for both skid and packaged installations

World-class Performance

- Excellent fuel economy and low oil consumption

Fuel System Controls

- Proven and reliable Mechanical Governer
- 3-5% Droop Governing
- 12V or 24V Electric Shutoff

Smooth Operation

- Smooth vibration with full length engine balancers

Easy to Apply, Easy to Install

- Front and rear engine mounting pads on the side of the block facilitates installations
- Either side service for filters and service points
- All connection points in common locations make it easy to install or package

Emissions

- CARB & EPA Certified
- EPA Tier II Certified

John Deere Power Systems
3801 W. Ridgeway Ave.
PO Box 5100
Waterloo, IA 50704-5100
Phone: 1-800-533-6446
Fax: 319.292.5075

John Deere Power Systems
Usine de Saran
La Foulonnerie - B.P. 11.13
45401 Fleury les Aubrais Cedex
France
Phone: 33.2.38.82.61.19
Fax: 33.2.38.82.60.00

All values at rated speed and power with standard options unless otherwise noted. Specifications and design subject to change without notice.

Litho in U.S.A. (11-02) © 2010 JOHN DEERE

2.5 Engine Data—G 50, G 70, G 85

		G 50 0009259 Rev. 114 and lower, 0009463, 0009477	G 70 0009260 Rev. 113 and lower, 0009464, 0009478	G 85 0009310
Engine				
Engine make / type		John Deere / 4.5L		
Model		4045DF150	4045TF150	4045TF250
Number of cylinders		4		
Displacement	l (in^3)	4.5 (274.6)		
Engine speed	rpm	1800		
Power @ 1800 rpm - continuous/standby	kW/Hp	52.9/71	90/99	102/113
Coolant capacity	l (qts.)	22.7 (24)		
Oil capacity	l (qts.)	13.5 (14)		
Battery	Volts/CCa	12/720		
Fuel type		Diesel		
Fuel tank capacity	l (gal.)	329.3 (87)		
Fuel consumption, continuous load	l/hr (gal./hr)	12.5 (3.3)	16.7 (4.4)	18.6 (4.9)
Running time, continuous load	Hours	26.3	19.8	17.7

2.6 Generator Data—G 50, G 70, G 85

		G 50 0009259 Rev. 114 and lower, 0009463, 0009477	G 70 0009260 Rev. 113 and lower, 0009464, 0009478	G 85 0009310
Generator				
Make/Type		Marathon/ Brushless		
Model		361PSL1648	361PSL1647	361PSL1649
Generator speed	rpm	1800		
Voltage selector switch		3 position		
AC voltages available		120/240 zig-zag 120/208 low-wye 277/480 Hi-wye		
Frequency		60 Hz		
Power factor	1ø 3ø	1.0 0.8		
Voltage regulation		±1.00%		
Insulation class		H		
Sound level at 7 m (23 ft.)	dB(A)	71	69	70
AC receptacles		2 duplex, 3 twist-lock		
1ø 120 GFI duplex	Amps	2-20		
1ø 120/240 V twist lock	Amps	1-30A 2-50A		
Standby Output	kW/kVA	43/54	62/78	72/90
Prime Output	kW/kVA	40/50	57/71	66/83
Main breaker	Amps	175	225	250

2.7 Trailer Technical Data—G 50, G 70, G 85

		G 50 0009259 Rev. 114 and lower, 0009463, 0009477	G 70 0009260 Rev. 113 and lower, 0009464, 0009478	G 85 0009310
Trailer and Skid				
Dry weight of skid	kg (lbs.)	1550 (3418)	1583 (3490)	1622 (3576)
Operating weight of skid	kg (lbs.)	1745 (3848)	1778 (3920)	1817 (4006)
Trailer weight	kg (lbs.)			
	Single axle	442 (975)		
	Tandem axle	499 (1100)		
GVWR	kg (lbs.)			
	Single axle	2304 (5080)		
	Tandem axle	2722 (6000)		
Surge brakes	Fluid type	DOT3		
Tires	size	ST225/75D-15D		

2.8 Dimensions—G 50, G 70, G 85

in. (mm)

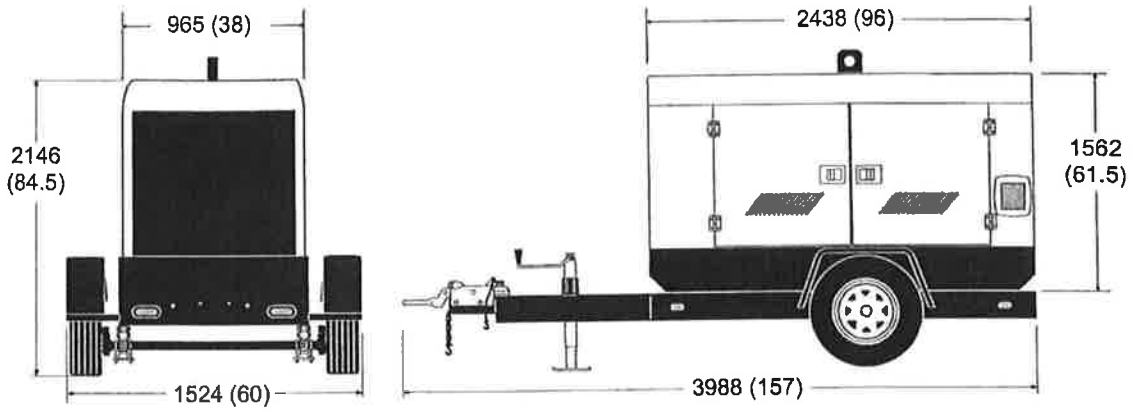

wc_gr001648

UNITED STATES ENVIRONMENTAL PROTECTION AGENCY
WASHINGTON, DC 20460

2007 Model Year Certificate of Conformity

Manufacturer:	**JOHN DEERE POWER SYSTEMS OF DEERE AND COMPANY**
Engine Family:	**7JDXL04.5051**
Certificate Number:	**JDX-NRCI-07-16**
Intended Service Class:	**NR 4 (37-75)**
Fuel Type:	**DIESEL**
FELs: g/kW-hr	NMHC+NOx: **N/A** NOx: **N/A** PM: **N/A**
Effective Date:	**12/18/2006**
Date Issued:	DEC 1 8 2006

Karl J. Simon, Acting Director
Compliance and Innovative Strategies Division
Office of Transportation and Air Quality

Pursuant to Section 213 of the Clean Air Act (42 U.S.C. section 7547) and 40 CFR Part 89, and subject to the terms and conditions prescribed in those provisions, this certificate of conformity is hereby issued with respect to the test engines which have been found to conform to applicable requirements and which represent the following nonroad engines, by engine family, more fully described in the documentation required by 40 CFR Part 89 and produced in the stated model year.

This certificate of conformity covers only those new nonroad compression-ignition engines which conform in all material respects to the design specifications that applied to those engines described in the documentation required by 40 CFR Part 89 and which are produced during the model year stated on this certificate of the said manufacturer, as defined in 40 CFR Part 89.

It is a term of this certificate that the manufacturer shall consent to all inspections described in 40 CFR 89.129-96 and 89.506-96 and authorized in a warrant or court order. Failure to comply with the requirements of such a warrant or court order may lead to revocation or suspension of this certificate for reasons specified in 40 CFR Part 89. It is also a term of this certificate that this certificate may be revoked or suspended or rendered void ab initio for other reasons specified in 40 CFR Part 89.

This certificate does not cover nonroad engines sold, offered for sale, or introduced, or delivered for introduction, into commerce in the U.S. prior to the effective date of the certificate.

California Environmental Protection Agency AIR RESOURCES BOARD	JOHN DEERE POWER SYSTEMS OF DEERE	EXECUTIVE ORDER U-R-004-0278 New Off-Road Compression-Ignition Engines

Pursuant to the authority vested in the Air Resources Board by Sections 43013, 43018, 43101, 43102, 43104 and 43105 of the Health and Safety Code; and

Pursuant to the authority vested in the undersigned by Sections 39515 and 39516 of the Health and Safety Code and Executive Order G-02-003;

IT IS ORDERED AND RESOLVED: That the following compression-ignition engines and emission control systems produced by the manufacturer are certified as described below for use in off-road equipment. Production engines shall be in all material respects the same as those for which certification is granted.

MODEL YEAR	ENGINE FAMILY	DISPLACEMENT (liters)	FUEL TYPE	USEFUL LIFE (hours)
2007	7JDXL04.5051	4.5	Diesel	8000

SPECIAL FEATURES & EMISSION CONTROL SYSTEMS	TYPICAL EQUIPMENT APPLICATION
Direct Diesel Injection	Tractor, Pump, Compressor, Generator Set, Other Industrial Equipment

The engine models and codes are attached.

The following are the exhaust certification standards (STD), and certification levels (CERT) for hydrocarbon (HC), oxides of nitrogen (NOx), or non-methane hydrocarbon plus oxides of nitrogen (NMHC+NOx), carbon monoxide (CO), and particulate matter (PM) in grams per kilowatt-hour (g/kW-hr); and the opacity-of-smoke certification standards and certification levels in percent (%) during acceleration (Accel), lugging (Lug), and the peak value from either mode (Peak) for this engine family (Title 13, California Code of Regulations, (13 CCR) Section 2423):

RATED POWER CLASS	EMISSION STANDARD CATEGORY		EXHAUST (g/kW-hr)					OPACITY (%)		
			HC	NOx	NMHC+NOx	CO	PM	ACCEL	LUG	PEAK
37 ≤ kW < 75	Tier 2	STD	N/A	N/A	7.5	5.0	0.40	20	15	50
		CERT	-	-	7.0	3.2	0.33	4	3	10

BE IT FURTHER RESOLVED: That for the listed engine models, the manufacturer has submitted the information and materials to demonstrate certification compliance with 13 CCR Section 2424 (emission control labels), and 13 CCR Sections 2425 and 2426 (emission control system warranty).

Engines certified under this Executive Order must conform to all applicable California emission regulations.

This Executive Order is only granted to the engine family and model-year listed above. Engines in this family that are produced for any other model-year are not covered by this Executive Order.

Executed at El Monte, California on this 20 day of December 2006.

Annette Hebert, Chief
Mobile Source Operations Division

BURNER FUEL PURCHASE AGREEMENT

This Burner Fuel Purchase Agreement ("Agreement") is between Thermo Fluids Inc., a Delaware corporation ("TFI") with its principal place of business located at 8925 E. Pima Center Pkwy., Suite 105, Scottsdale, Arizona 85258, and Western Construction Inc., a(n) Idaho Corporation ("Customer") with its principal place of business located at 10139 S Federal Way, Boise, Idaho 83716. TFI and Customer agree as follows:

1. Scope of Agreement and Price. TFI will supply burner fuel (the "Product") to Customer at the location(s), in the volumes and according to the pricing schedule set forth in Exhibit A. In addition to the fuel charge that may be imposed pursuant to Section 2, prices and volumes are subject to change upon the occurrence of any event that disrupts or materially impacts the markets for crude or refined oil. TFI will furnish Customer with notice of any price or volume change as soon as practicable.

The Product shall meet or exceed United States Code of Federal Regulations, 40 CFR Part 279, STANDARDS FOR THE MANAGEMENT OF USED OIL, Subpart B – Applicability, Paragraph 279.11, Used oil specifications, Table 1, specifications for used oil burned for energy recovery and the following specifications (some of which are included in 40 CFR Part 279):

Component	Specification Limit		
Arsenic	<	5	ppm
Cadmium	<	2	ppm
Chromium	<	10	ppm
Lead	<	100	ppm
Flash	>	100	°F
PCBs	<	2	ppm
Halogens	<	1000	ppm
Sulfur	<	0.5	%
Ash	<	0.85	%
Water	<	3.5	%
BTUs	>	135,000	per gallon

TFI will make best efforts to remove all free standing water. However, in the process of transporting some deminimus water may settle out.

2. Fuel Charge. TFI reserves the right to impose a fuel charge based on price fluctuations in the fuel markets as reported monthly by the United States Energy Information Administration (EIA) for *Retail On-Highway Diesel Prices - Average All Types.* The fuel charge will be calculated as a percentage of the total transportation charge, excluding taxes, according to the rate schedule set forth in Exhibit B. For example, if the price of on-highway fuel for the preceding month averaged $2.87 per gallon, the total invoiced transportation amount, excluding taxes, will be multiplied by .02 to determine the applicable fuel charge for the current month.

3. Term. The term of this Agreement will commence on March 1, 2010, and continue until December 31, 2010 unless sooner terminated by TFI in accordance with this Agreement.

4. Payment Terms. Payment is due Net 10 days from the date of TFI's invoice. Credit terms and conditions are subject to change at any time upon written notice from TFI. Customer accepts and agrees to abide by TFI's credit terms and conditions. Customer understands that its failure to fully comply with TFI's credit terms and conditions will constitute a material breach of this Agreement and will give TFI the right, in its sole discretion, to immediately terminate this Agreement. Further, if Customer fails to pay any amounts when due, Customer agrees to pay interest on the unpaid amount at the rate

Product is judged to have an acute oral LD50 (rat) greater than 5 g /kg of body weight, and an acute dermal LD50 (rabbit) greater than 3.16 g/kg of body weight.

SECTION F: Physical Data

The following are approximate or typical values and should not be used for precise design purposes.
INITIAL BOILING POINT: Approximately 460 DegF (238 DegC) by ASTM D-2887.
REID VAPOR PRESSURE = 0.2 psi @ 100 DegF by ASTM D-323
API GRAVITY = 27.5 - 28.0 @ 60 DegF.
VISCOSITY = 69 - 72 Centistokes @ 40 DegC (104 DegF)
SPECIFIC GRAVITY = 0.885 @ 60 DegF.
VAPOR DENSITY (Air = 1): Greater than 5
MOLECULAR WEIGHT: Approximately 255
PERCENT VOLATILE BY VOLUME: Negligible from open container in 4 hours @ 100 DegF
pH: Essentially neutral
EVAPORATION RATE: Less than 0.01
SOLUBILITY IN WATER @ 1 Atmosphere: Negligible, less than 0.1 %.
% Sulfur by Weight = 0.35-0.45
Total Halogens < 1000 ppm (EPA Method 9020)
Ash Dry Weight = 0.40 - 0.65% (ASTM D-482)
Total Lead = 5 - 70 ppm (EPA Method 239.2/7421)
Total Arsenic < 0.5 ppm (EPA Method 206.3/7060)
Total Chromium < 5.0 ppm (EPA Method 218.2/7191)
Total Cadmium < 2.0 ppm (EPA Method 213.2/7131)
Polychlorinated Biphenyls (PCB's) < 2.0 ppm (EPA Method 8080)

SECTION G: Reactivity

This product is stable and will not react violently with water. Hazardous polymerization will not occur. Avoid contact with strong oxidants such as liquid chlorine, concentrated oxygen, sodium hypochlorite, calcium hypochlorite, etc. as this presents serious explosion hazard.

SECTION H: Environmental Information

STEPS TO BE TAKEN IN CASE MATERIAL IS RELEASED OR SPILLED: Recover free product. Add sand, earth, or other suitable absorbent to contain the spread of spill and to absorb product. Minimize skin contact. Make every attempt to keep product out of sewers and watercourses by diking or impounding. Report spill to all appropriate authorities in accordance with Users Spill Prevention, Control and Countermeasure plan and governing regulations:

REPORTABLE QUANTITY (RQ), EPA Regulation 40 CFR 302 (CERCLA Section 102)
THRESHOLD PLANNING QUANTITY (TPQ) EPA Regulation 40 CFR 355
TOXIC CHEMICAL RELEASE REPORTING, EPA Regulation 40 CFR 372
None required for product or any constituent greater than 1% or 0.1% (carcinogen)

APPENDIX 4

Emissions Calculations

APPENDIX 4

Emissions Inventory at 350 T/hr Production

Emission Unit:	Drum Dryer
Manufacturer /Model:	Gencor, Model 400 Portable Insulated Ultradrum with Ultra II-
Production capacity (T/hr):	350
Burner capacity (MMBTU/hr):	135
Fuel Type(s):	RFO, #2 Diesel, natural gas, or propane
Daily Hours of Operation (hr/d)	12.5
Max Daily Production (T/d)	4375
Annual Hours of Operation (hr/yr):	2387.5
Max Annual Production (T/yr):	835625

Control Equipment:	Gencor Baghouse, Model CFP-182

RFO and Diesel (MMBTU/1000 gallons):	140	(AP-42, App A)
Nat. gas (BTU/scf):	1020	(AP-42, Table 1.4-1, footnote (a))
Propane (MMBTU/1000 gallons):	91.5	(AP-42, Table 1.5-1, footnote (a))
Propane (BTU/scf):	2504	(http://www.engineeringtoolbox.com/fuel-gases-combustion-values-d_510.html)

Potential To Emit - Criteria Pollutants

Criteria Pollutant	RFO			#2 Diesel			Nat. Gas			Propane			Max lb/hr	Max T/yr	Max 24hr Ave lb/hr	Max Annual Ave lb/hr
	EF	lb/hr	T/yr	EF	lb/hr	T/yr	EF	lb/hr	T/yr	EF	lb/hr	T/yr				
CO	0.13	45.50	54.32	0.13	45.50	54.32	0.13	45.500	54.32	0.13	45.500	54.32	45.50	54.32	23.70	12.40
CO2e		11715.92	13985.88		11715.92	13985.88		11728.46	14000.85		11961.89	14384.50	11961.89	14384.50	6230.15	3260.16
NOx	0.055	19.25	22.98	0.055	19.25	22.98	0.026	9.100	10.86	0.039	13.650	16.29	19.25	22.98	10.03	5.25
SO2	0.058	20.30	24.23	0.011	3.85	4.60	0.0034	1.190	1.42	0.0034	1.190	1.42	20.30	24.23	10.57	5.53
PM	0.033	11.55	13.79	0.033	11.55	13.79	0.033	11.550	13.79	0.033	11.550	13.79	11.55	13.79	6.02	3.15
PM10	0.023	8.05	9.61	0.023	8.05	9.61	0.023	8.050	9.61	0.023	8.050	9.61	8.05	9.61	4.19	2.19
PM2.5		3.85	4.59		3.85	4.59		3.85	4.59		3.85	4.59	3.85	4.59	2.00	1.05
VOC	0.032	11.20	13.37	0.032	11.20	13.37	0.032	11.200	13.37	0.032	11.200	13.37	11.20	13.37	5.83	3.05
Lead	0.000015	0.01	0.01	0.000015	0.01	0.01	6.2E-07	0.00	0.00	6.2E-07	0.00	0.00	0.01	0.01	0.00	0.00

Emission Factor Information:

1) Carbon Monoxide: Emission factors from AP-42 (3/04), Table 11.1-7. For propane, the EF for natural gas combustion was applied. EFs are expressed in pounds of CO per ton of HMA produced.

2) Carbon Dioxide Equivalent: Refer to Greenhouse Gases table for calculation methodology.

3) Nitrogen Oxides: Emission factors from AP-42 (3/04), Table 11.1-7. For propane, the NOx EF for natural gas has been multiplied by a factor of 1.5, per footnote (a) from Table 1.5-1, Emission Factors for LPG Combustion (i.e., "The NOx emission factors have been multiplied by a factor of 1.5, which is the approximate ratio of propane/butane NOx emissions to natural gas Nox emissions."). EFs expressed in pounds of NOx per ton of HMA produced.

4) Sulfur Dioxide: Emission factors from AP-42 (3/04), Table 11.1-7. For propane, the EF for natural gas combustion was applied. EFs are expressed in pounds of SOx per ton of HMA produced.

5) Particulate Matter: Emission factors based on AP-42 (3/04), Table 11.1-3, for fabric filter and Total PM. EFs are expressed in pounds of PM-10 per ton of HMA produced.

6) PM-10: Emission factors based on AP-42 (3/04), Table 11.1-3, for fabric filter and Total PM-10. EFs are expressed in pounds of PM-10 per ton of HMA produced.

7) PM-2.5: Emission factors based on AP-42 (3/04), Table 11.1-3, for fabric filter and Total PM. To derive PM2.5, a speciation factor of 0.333 was applied (California Air Resources Board, 7/2009). EFs are expressed in pounds of PM-2.5 per ton of HMA produced.

8) VOC: Emission factors from AP-42 (3/04), Table 11.1-8. For propane, the EF for natural gas combustion was applied. EFs are expressed in pounds of VOC per ton of HMA produced.

9) Lead: Emission factors from AP-42 (3/04), Table 11.1-12, for fabric filter. EFs are expressed in pounds of Pb per ton of HMA produced.

Potential To Emit - Non-Carcinogenic TAPs

Non-Carcinogen TAP	RFO			#2 Diesel			Nat. Gas			Propane			Max lb/hr	Max T/yr	Max 24hr Ave lb/hr	Max Annual Ave lb/hr
	EF	lb/hr	T/yr	EF	lb/hr	T/yr	EF	lb/hr	T/yr	EF	lb/hr	T/yr				
Acetone	8.3E-04	2.9E-01	3.5E-01		0.0E+00	0.0E+00		0.0E+00	0.0E+00		0.0E+00	0.0E+00	2.91E-01	3.47E-01	1.51E-01	7.92E-02
Acrolein	2.5E-05	9.1E-03	1.1E-02		0.0E+00	0.0E+00		0.0E+00	0.0E+00		0.0E+00	0.0E+00	9.10E-03	1.09E-02	4.74E-03	2.48E-03
Antimony	1.8E-07	6.3E-05	7.5E-05	1.8E-07	6.3E-05	7.5E-05	1.8E-07	6.3E-05	7.5E-05	1.8E-07	6.3E-05	7.5E-05	6.30E-05	7.52E-05	3.28E-05	1.72E-05
Barium	5.8E-67	2.0E-64	2.4E-64	5.8E-06	2.0E-03	2.4E-03	5.8E-06	2.0E-03	2.4E-03	5.8E-06	2.0E-03	2.4E-03	2.03E-03	2.42E-03	1.06E-03	5.53E-04
Chromium	5.5E-06	1.9E-03	2.3E-03	5.5E-06	1.9E-03	2.3E-03	5.5E-06	1.9E-03	2.3E-03	5.5E-06	1.9E-03	2.3E-03	1.93E-03	2.30E-03	1.00E-03	5.25E-04
Cobalt	2.6E-08	9.1E-06	1.1E-05	2.6E-08	9.1E-06	1.1E-05	2.6E-08	9.1E-06	1.1E-05	2.6E-08	9.1E-06	1.1E-05	9.1E-06	1.1E-05	4.7E-06	2.5E-06
Copper	3.1E-06	1.1E-03	1.3E-03	3.1E-06	1.1E-03	1.3E-03	3.1E-06	1.1E-03	1.3E-03	3.1E-06	1.1E-03	1.3E-03	1.1E-03	1.3E-03	5.7E-04	3.0E-04
Crotonaldehyde	8.6E-05	3.0E-02	3.6E-02		0.0E+00	0.0E+00		0.0E+00	0.0E+00		0.0E+00	0.0E+00	3.01E-02	3.59E-02	1.57E-02	8.20E-03
Ethyl Benzene	2.4E-04	8.4E-02	1.0E-01	2.4E-04	8.4E-02	1.0E-01	2.4E-04	8.4E-02	1.0E-01	2.4E-04	8.4E-02	1.0E-01	8.40E-02	1.00E-01	4.38E-02	2.29E-02
Heptane	9.4E-03	3.3E+00	3.9E+00	9.4E-03	3.3E+00	3.9E+00	9.4E-03	3.3E+00	3.9E+00	9.4E-03	3.3E+00	3.9E+00	3.29E+00	3.93E+00	1.71E+00	8.97E-01
Hexane	9.2E-04	3.2E-01	3.8E-01	9.2E-04	3.2E-01	3.8E-01	9.2E-04	3.2E-01	3.8E-01	9.2E-04	3.2E-01	3.8E-01	3.22E-01	3.84E-01	1.68E-01	8.78E-02
Hydrochloric Acid	2.1E-04	7.4E-02	8.8E-02		0.0E+00	0.0E+00		0.0E+00	0.0E+00		0.0E+00	0.0E+00	7.4E-02	8.8E-02	3.8E-02	2.0E-02
Manganese	7.7E-06	2.7E-03	3.2E-03	7.7E-06	2.7E-03	3.2E-03	7.7E-06	2.7E-03	3.2E-03	7.7E-06	2.7E-03	3.2E-03	2.7E-03	3.2E-03	1.4E-03	7.3E-04
Mercury	2.6E-06	9.1E-04	1.1E-03	2.6E-06	9.1E-04	1.1E-03	2.4E-07	8.4E-05	1.0E-04	2.4E-07	8.4E-05	1.0E-04	9.1E-04	1.1E-03	4.7E-04	2.5E-04
Methyl Chloroform	4.8E-05	1.7E-02	2.0E-02	4.8E-05	1.7E-02	2.0E-02	4.8E-05	1.7E-02	2.0E-02	4.8E-05	1.7E-02	2.0E-02	1.68E-02	2.01E-02	8.75E-03	4.58E-03
Methyl Ethyl Ketone	2.0E-05	7.0E-03	8.4E-03		0.0E+00	0.0E+00		0.0E+00	0.0E+00		0.0E+00	0.0E+00	7.00E-03	8.36E-03	3.65E-03	1.91E-03
Naphthalene	6.5E-04	2.3E-01	2.7E-01	6.5E-04	2.3E-01	2.7E-01	9.0E-05	3.2E-02	3.8E-02	9.0E-05	3.2E-02	3.8E-02	2.28E-01	2.72E-01	1.18E-01	6.20E-02
n-Pentane	2.1E-04	7.4E-02	8.8E-02	2.1E-04	7.4E-02	8.8E-02	2.1E-04	7.4E-02	8.8E-02	2.1E-04	7.4E-02	8.8E-02	7.35E-02	8.77E-02	3.83E-02	2.00E-02
Phosphorus	2.8E-05	9.8E-03	1.2E-02	2.8E-05	9.8E-03	1.2E-02	2.8E-05	9.8E-03	1.2E-02	2.8E-05	9.8E-03	1.2E-02	9.80E-03	1.17E-02	5.10E-03	2.67E-03
Propionaldehyde	1.3E-04	4.6E-02	5.4E-02		0.0E+00	0.0E+00		0.0E+00	0.0E+00		0.0E+00	0.0E+00	4.55E-02	5.43E-02	2.37E-02	1.24E-02
Quinone	1.6E-04	5.6E-02	6.7E-02		0.0E+00	0.0E+00		0.0E+00	0.0E+00		0.0E+00	0.0E+00	5.60E-02	6.69E-02	2.92E-02	1.53E-02
Selenium	3.5E-07	1.2E-04	1.5E-04	3.5E-07	1.2E-04	1.5E-04	3.5E-07	1.2E-04	1.5E-04	3.5E-07	1.2E-04	1.5E-04	1.23E-04	1.46E-04	6.38E-05	3.34E-05
Silver	4.8E-07	1.7E-04	2.0E-04	4.8E-07	1.7E-04	2.0E-04	4.8E-07	1.7E-04	2.0E-04	4.8E-07	1.7E-04	2.0E-04	1.68E-04	2.01E-04	8.75E-05	4.58E-05
Thallium	4.1E-09	1.4E-06	1.7E-06	4.1E-09	1.4E-06	1.7E-06	4.1E-09	1.4E-06	1.7E-06	4.1E-09	1.4E-06	1.7E-06	1.44E-06	1.71E-06	7.47E-07	3.91E-07
Toluene	2.9E-03	1.0E+00	1.2E+00	2.9E-03	1.0E+00	1.2E+00	1.5E-04	5.3E-02	6.3E-02	1.5E-04	5.3E-02	6.3E-02	1.02E+00	1.21E+00	5.29E-01	2.77E-01
Valeraldehyde	6.7E-05	2.3E-02	2.8E-02		0.0E+00	0.0E+00		0.0E+00	0.0E+00		0.0E+00	0.0E+00	2.35E-02	2.80E-02	1.22E-02	6.39E-03
Xylene	2.0E-04	7.0E-02	8.4E-02	2.0E-04	7.0E-02	8.4E-02	2.0E-04	7.0E-02	8.4E-02	2.0E-04	7.0E-02	8.4E-02	7.00E-02	8.36E-02	3.65E-02	1.91E-02
Zinc	6.1E-05	2.1E-02	2.5E-02	6.1E-05	2.1E-02	2.5E-02	6.1E-05	2.1E-02	2.5E-02	6.1E-05	2.1E-02	2.5E-02	2.14E-02	2.55E-02	1.11E-02	5.82E-03
TOTALS:			6.771			6.135			4.751			4.751	5.674	6.773		

Potential To Emit - Carcinogenic TAPs

Carcinogen TAP	RFO			#2 Diesel			Nat. Gas			Propane			Max lb/hr	Max T/yr	Max 24hr Ave lb/hr	Max Annual Ave lb/hr
	EF	lb/hr	T/yr	EF	lb/hr	T/yr	EF	lb/hr	T/yr	EF	lb/hr	T/yr				
Acenaphthene	1.4E-06	4.9E-04	5.8E-04	1.40E-06	4.9E-04	5.8E-04	1.40E-06	4.9E-04	5.8E-04	1.40E-06	4.9E-04	5.8E-04	4.90E-04	5.85E-04	2.55E-04	1.34E-04
Acenaphthylene	2.2E-05	7.7E-03	9.2E-03	2.20E-05	7.7E-03	9.2E-03	8.60E-06	3.0E-03	3.6E-03	8.60E-06	3.0E-03	3.6E-03	7.70E-03	9.19E-03	4.01E-03	2.10E-03
Acetaldehyde	1.3E-03	4.6E-01	5.4E-01		0.0E+00	0.0E+00		0.0E+00	0.0E+00		0.0E+00	0.0E+00	4.55E-01	5.43E-01	2.37E-01	1.24E-01
Anthracene	3.1E-06	1.1E-03	1.3E-03	3.1E-06	1.1E-03	1.3E-03	2.2E-07	7.7E-05	9.2E-05	2.2E-07	7.7E-05	9.2E-05	1.09E-03	1.30E-03	5.65E-04	2.96E-04
Arsenic	5.6E-07	2.0E-04	2.3E-04	5.6E-07	2.0E-04	2.3E-04	5.6E-07	2.0E-04	2.3E-04	5.6E-07	2.0E-04	2.3E-04	1.96E-04	2.34E-04	1.02E-04	5.34E-05
Benzene	3.9E-04	1.4E-01	1.6E-01	3.9E-04	1.4E-01	1.6E-01	3.9E-04	1.4E-01	1.6E-01	3.9E-04	1.4E-01	1.6E-01	1.37E-01	1.63E-01	7.11E-02	3.72E-02
Benzo(a)pyrene	9.80E-09	3.4E-06	4.1E-06	9.80E-09	3.4E-06	4.1E-06	9.80E-09	3.4E-06	4.1E-06	9.80E-09	3.4E-06	4.1E-06	3.43E-06	4.09E-06	1.79E-06	9.35E-07
Benzo(g,h,i)perylene	4.0E-08	1.4E-05	1.7E-05	4.0E-08	1.4E-05	1.7E-05	4.0E-08	1.4E-05	1.7E-05	4.0E-08	1.4E-05	1.7E-05	1.40E-05	1.67E-05	7.29E-06	3.82E-06
Benzo(e)pyrene	1.1E-07	3.9E-05	4.6E-05	1.1E-07	3.9E-05	4.6E-05	1.1E-07	3.9E-05	4.6E-05	1.1E-07	3.9E-05	4.6E-05	3.85E-05	4.60E-05	2.01E-05	1.05E-05
Beryllium	0.0E+00	0.0E+00	0.0E+00	0.0E+00	0.0E+00	0.0E+00	0.0E+00	0.0E+00	0.0E+00	0.0E+00	0.0E+00	0.0E+00	0.00E+00	0.00E+00	0.00E+00	0.00E+00
Cadmium	4.1E-07	1.4E-04	1.7E-04	4.1E-07	1.4E-04	1.7E-04	4.1E-07	1.4E-04	1.7E-04	4.1E-07	1.4E-04	1.7E-04	1.44E-04	1.71E-04	7.47E-05	3.91E-05
Hexavalent Chromium	4.5E-07	1.6E-04	1.9E-04	4.5E-07	1.6E-04	1.9E-04	4.5E-07	1.6E-04	1.9E-04	4.5E-07	1.6E-04	1.9E-04	1.58E-04	1.88E-04	8.20E-05	4.29E-05
Dioxin/Furans (see below)													4.20E-08	5.01E-08		2.83E-10
Fluoranthene	6.1E-07	2.1E-04	2.5E-04	6.1E-07	2.1E-04	2.5E-04	6.1E-07	2.1E-04	2.5E-04	6.1E-07	2.1E-04	2.5E-04	2.14E-04	2.55E-04	1.11E-04	5.82E-05
Fluorene	1.1E-05	3.9E-03	4.6E-03	1.1E-05	3.9E-03	4.6E-03	3.8E-06	1.3E-03	1.6E-03	3.8E-06	1.3E-03	1.6E-03	3.85E-03	4.60E-03	2.01E-03	1.05E-03
Formaldehyde	3.1E-03	1.1E+00	1.3E+00	3.1E-03	1.1E+00	1.3E+00	3.1E-03	1.1E+00	1.3E+00	3.1E-03	1.1E+00	1.3E+00	1.09E+00	1.30E+00	5.65E-01	2.96E-01
2-Methylnaphthalene	1.7E-04	6.0E-02	7.1E-02	1.70E-04	6.0E-02	7.1E-02	7.40E-05	2.6E-02	3.1E-02	7.40E-05	2.6E-02	3.1E-02	5.95E-02	7.10E-02	3.10E-02	1.62E-02
Naphthalene	6.5E-04	2.3E-01	2.7E-01	6.5E-04	2.3E-01	2.7E-01	9.0E-05	3.2E-02	3.8E-02	9.0E-05	3.2E-02	3.8E-02	2.28E-01	2.72E-01	1.18E-01	6.20E-02
Nickel	6.3E-05	2.2E-02	2.6E-02	6.3E-05	2.2E-02	2.6E-02	6.3E-05	2.2E-02	2.6E-02	6.3E-05	2.2E-02	2.6E-02	2.21E-02	2.63E-02	1.15E-02	6.01E-03
Perylene	8.8E-09	3.1E-06	3.7E-06	8.8E-09	3.1E-06	3.7E-06	8.8E-09	3.1E-06	3.7E-06	8.8E-09	3.1E-06	3.7E-06	3.08E-06	3.68E-06	1.60E-06	8.39E-07
Phenanthrene	2.3E-05	8.1E-03	9.6E-03	2.3E-05	8.1E-03	9.6E-03	7.6E-06	2.7E-03	3.2E-03	7.6E-06	2.7E-03	3.2E-03	8.05E-03	9.61E-03	4.19E-03	2.19E-03
POM (see below)	5.5E-07	1.9E-04	2.3E-04	5.5E-07	1.9E-04	2.3E-04	5.5E-07	1.9E-04	2.3E-04	5.5E-07	1.9E-04	2.3E-04	1.92E-04	2.29E-04	9.99E-05	5.23E-05
Pyrene	3.0E-06	1.1E-03	1.3E-03	3.0E-06	1.1E-03	1.3E-03	5.4E-07	1.9E-04	2.3E-04	5.4E-07	1.9E-04	2.3E-04	1.05E-03	1.25E-03	5.47E-04	2.86E-04
2,3,7,8-TCDD	2.1E-13	7.4E-11	8.8E-11	2.1E-13	7.4E-11	8.8E-11		0.0E+00	0.0E+00		0.0E+00	0.0E+00	7.35E-11	8.77E-11	3.83E-11	2.00E-11
TOTALS:			2.40			1.85			1.56			1.56	2.01	2.40		

1) Metals: Emission factors from AP-42 (3/04), Table 11.1-12, for fabric filter. EF expressed in pounds of pollutant per ton of HMA produced.

2) Organic Pollutants: Emission factors from AP-42 (3/04), Table 11.1-10., for fabric filter. For propane, the EFs for natural gas have been applied. EF for HCl from RFO combustion from AP-42 (3/04), Table 11.1-8. EFs expressed in pounds of pollutant per ton of HMA produced.

3) Dioxin/Furans: Max Annual Ave value represents emissions from all dioxin/furan mixtures, expressed as equivalent emissions of 2,3,7,8-TCDD, per IDAPA 58.01.01.586. Refer to Dioxin/Furan Mixture table for calculation methodology.

4) POM: Emission factors for POM based on polyaromatic hydrocarbon mixture identified in IDAPA 58.01.01.586. Refer to Polycyclic Organic Matter Mixture table for calculation methodology.

Polycyclic Organic Matter Mixture

Polycyclic Organic Matter (POM)	RFO			#2 Diesel			Nat. Gas			Propane		
	EF	lb/hr	T/yr	EF	lb/hr	T/yr	EF	lb/hr	T/yr	EF	lb/hr	T/yr
Benzo(a)anthracene	2.10E-07	7.4E-05	8.8E-05	2.10E-07	7.4E-05	8.8E-05	2.10E-07	7.4E-05	8.8E-05	2.10E-07	7.4E-05	8.8E-05
Benzo(b)fluoranthene	1.00E-07	3.5E-05	4.2E-05	1.00E-07	3.5E-05	4.2E-05	1.00E-07	3.5E-05	4.2E-05	1.00E-07	3.5E-05	4.2E-05
Benzo(k)fluoranthene	4.10E-08	1.4E-05	1.7E-05	4.10E-08	1.4E-05	1.7E-05	4.10E-08	1.4E-05	1.7E-05	4.10E-08	1.4E-05	1.7E-05
Benzo(a)pyrene	9.80E-09	3.4E-06	4.1E-06	9.80E-09	3.4E-06	4.1E-06	9.80E-09	3.4E-06	4.1E-06	9.80E-09	3.4E-06	4.1E-06
Chrysene	1.80E-07	6.3E-05	7.5E-05	1.80E-07	6.3E-05	7.5E-05	1.80E-07	6.3E-05	7.5E-05	1.80E-07	6.3E-05	7.5E-05
Dibenzo(a,h)anthracene		0.0E+00	0.0E+00		0.0E+00	0.0E+00		0.0E+00	0.0E+00		0.0E+00	0.0E+00
Indeno(1,2,3-cd)pyrene	7.00E-09	2.5E-06	2.9E-06	7.00E-09	2.5E-06	2.9E-06	7.00E-09	2.5E-06	2.9E-06	7.00E-09	2.5E-06	2.9E-06
TOTALS:	5.48E-07		0.000	5.48E-07		0.000	5.48E-07		0.000	5.48E-07		0.000

Dioxin/Furan Mixture

Dioxin/Furan	RFO			#2 Diesel			Max lb/hr	Max T/yr	TEF	Adjusted Max Annual Ave lb/hr
	EF	lb/hr	T/yr	EF	lb/hr	T/yr				
2,3,7,8-TCDD	2.1E-13	7.4E-11	8.8E-11	2.1E-13	7.4E-11	8.8E-11	7.35E-11	8.77E-11	1.0	2.00E-11
Total TCDD	9.3E-13	3.3E-10	3.9E-10	9.3E-13	3.3E-10	3.9E-10	3.26E-10	3.89E-10		
1,2,3,7,8-PeCDD	3.1E-13	1.1E-10	1.3E-10	3.1E-13	1.1E-10	1.3E-10	1.09E-10	1.30E-10	1.0	2.96E-11
Total PeCDD	2.2E-11	7.7E-09	9.2E-09	2.2E-11	7.7E-09	9.2E-09	7.70E-09	9.19E-09		
1,2,3,4,7,8-HxCDD	4.2E-13	1.5E-10	1.8E-10	4.2E-13	1.5E-10	1.8E-10	1.47E-10	1.75E-10	0.10	4.01E-12
1,2,3,6,7,8-HxCDD	1.3E-12	4.6E-10	5.4E-10	1.3E-12	4.6E-10	5.4E-10	4.55E-10	5.43E-10	0.10	1.24E-11
1,2,3,7,8,9-HxCDD	9.8E-13	3.4E-10	4.1E-10	9.8E-13	3.4E-10	4.1E-10	3.43E-10	4.09E-10	0.10	9.35E-12
Total HxCDD	1.2E-11	4.2E-09	5.0E-09	1.2E-11	4.2E-09	5.0E-09	4.20E-09	5.01E-09		
1,2,3,4,6,7,8-Hp-CDD	4.8E-12	1.7E-09	2.0E-09	4.8E-12	1.7E-09	2.0E-09	1.68E-09	2.01E-09	0.01	4.58E-12
Total HpCDD	1.9E-11	6.7E-09	7.9E-09	1.9E-11	6.7E-09	7.9E-09	6.65E-09	7.94E-09		
Octa CDD	2.5E-11	8.8E-09	1.0E-08	2.5E-11	8.8E-09	1.0E-08	8.75E-09	1.04E-08	0.0003	7.15E-13
Total PCDD	7.9E-11	2.8E-08	3.3E-08	7.9E-11	2.8E-08	3.3E-08	2.77E-08	3.30E-08		
2,3,7,8-TCDF	9.7E-13	3.4E-10	4.1E-10	9.7E-13	3.4E-10	4.1E-10	3.40E-10	4.05E-10	0.1	9.25E-12
Total TCDF	3.7E-12	1.3E-09	1.5E-09	3.7E-12	1.3E-09	1.5E-09	1.30E-09	1.55E-09		
1,2,3,7,8-PeCDF	4.3E-12	1.5E-09	1.8E-09	4.3E-12	1.5E-09	1.8E-09	1.51E-09	1.80E-09	0.03	1.23E-11
2,3,4,7,8-PeCDF	8.4E-13	2.9E-10	3.5E-10	8.4E-13	2.9E-10	3.5E-10	2.94E-10	3.51E-10	0.30	2.40E-11
Total PeCDF	8.4E-11	2.9E-08	3.5E-08	8.4E-11	2.9E-08	3.5E-08	2.94E-08	3.51E-08		
1,2,3,4,7,8-HxCDF	4.0E-12	1.4E-09	1.7E-09	4.0E-12	1.4E-09	1.7E-09	1.40E-09	1.67E-09	0.10	3.82E-11
1,2,3,6,7,8-HxCDF	1.2E-12	4.2E-10	5.0E-10	1.2E-12	4.2E-10	5.0E-10	4.20E-10	5.01E-10	0.10	1.14E-11
2,3,4,6,7,8-HxCDF	1.9E-12	6.7E-10	7.9E-10	1.9E-12	6.7E-10	7.9E-10	6.65E-10	7.94E-10	0.10	1.81E-11
1,2,3,7,8,9-HxCDF	8.4E-12	2.9E-09	3.5E-09	8.4E-12	2.9E-09	3.5E-09	2.94E-09	3.51E-09	0.10	8.01E-11
Total HxCDF	1.3E-11	4.6E-09	5.4E-09	1.3E-11	4.6E-09	5.4E-09	4.55E-09	5.43E-09		
1,2,3,4,6,7,8-HpCDF	6.5E-12	2.3E-09	2.7E-09	6.5E-12	2.3E-09	2.7E-09	2.28E-09	2.72E-09	0.01	6.20E-12
1,2,3,4,7,8,9-HpCDF	2.7E-12	9.5E-10	1.1E-09	2.7E-12	9.5E-10	1.1E-09	9.45E-10	1.13E-09	0.01	2.58E-12
Total HpCDF	1.0E-11	3.5E-09	4.2E-09	1.0E-11	3.5E-09	4.2E-09	3.50E-09	4.18E-09		
Octa CDF	4.8E-12	1.7E-09	2.0E-09	4.8E-12	1.7E-09	2.0E-09	1.68E-09	2.01E-09	0.0003	1.37E-13
Total PCDF	4.0E-11	1.4E-08	1.7E-08	4.0E-11	1.4E-08	1.7E-08	1.40E-08	1.67E-08		
Total PCDD/PCDF	1.2E-10	4.2E-08	5.0E-08	1.2E-10	4.2E-08	5.0E-08	4.20E-08	5.01E-08		
							TOTAL ADJUSTED:			2.83E-10

1) Organic Pollutants: Emission factors from AP-42 (3/04), Table 11.1-10., for fabric filter. For propane, the EFs for natural gas have been applied. EF for dioxin/furans from nat. gas or propane not avaliable. EFs expressed in pounds of pollutant per ton of HMA produced.

2) Toxic Equivalency Factors: 2005, Van den Berg, et al, The 2005 World Health Organization Reevaluation of Human and Mammalian Toxic Equivalency Factors for Dioxins and Dioxin-Like Compounds, Toxicological Sciences 93(2), 223-241 (2006). Accessible at http://toxsci.oxfordjournals.org/cgi/reprint/93/2/223. Use of the 2005 WHO toxic equivalency factors (TEFs) is consistent with current EPA recommendations for TRI reporting (72 FR 26544, May 10, 2007). IDAPA 58.01.01.586, TAPs Carcinogenic Increments: Total of adjusted emission rates are expressed as 2,3,7,8 TCDD equivalents.

Greenhouse Gases

GHG	RFO			#2 Diesel			Nat. Gas			Propane			Max lb/hr	Max T/yr
	EF	lb/hr	T/yr	EF	lb/hr	T/yr	EF	lb/hr	T/yr	EF	lb/hr	T/yr		
CO2	33.0	11550.00	13787.81	33.0	11550.00	13787.81	33.0	11550.00	13787.81	33.0	11550.00	13787.81	11550.00	13787.81
Methane	0.012	4.20	5.01	0.012	4.20	5.01	0.012	4.20	5.01	0.012	0.01	5.01	4.20	5.01
N2O	0.260	0.251	0.30	0.260	0.251	0.30	2.2	0.29	0.35	0.9	1.33	1.59	1.33	1.59
CO2e		11715.92	13985.88		11715.92	13985.88		11728.46	14000.85		11961.89	14384.50	12049.84	14384.50

1) Carbon Dioxide: Emission factors from AP-42 (3/04), Table 11.1-7. For propane, the EF for natural gas combustion was applied. EFs are expressed in pounds of CO2 per ton of HMA produced.

2) Methane: Emission factors from AP-42 (3/04), Table 11.1-8. For propane, the EF for natural gas combustion was applied. EFs are expressed in pounds of methane per ton of HMA produced.

3) N2O: For #2 diesel, emission factor from AP-42 (5/10), Table 1.3-8; EF expressed in pounds of N2O per 1000 gallons. For RFO, the EF for #2 diesel was applied. For natural gas, EF from AP-42 (7/98), Table 1.4-2, uncontrolled; EF expressed in pounds of N2O per MMSCF. For propane, Ef from AP-42 (7/08), Table 1.5-1; EF expressed in lb N2O per 1000 gallons.

4) CO2e: The sum of CO2, methane, and N2O expressed as carbon dioxide equivalent. A global warming potential of 21 was applied to methane. A GWP of 310 was applied to N2O.

Potential To Emit - HAPs

HAP	RFO			#2 Diesel			Nat. Gas			Propane			Max lb/hr	Max T/yr
	EF	lb/hr	T/yr	EF	lb/hr	T/yr	EF	lb/hr	T/yr	EF	lb/hr	T/yr		
Acenaphthene[3]	1.40E-06	4.90E-04	5.85E-04	1.40E-06	4.90E-04	5.85E-04	1.40E-06	4.90E-04	5.85E-04	1.40E-06	4.90E-04	5.85E-04	4.90E-04	0.001
Acenaphthylene[3]	2.20E-05	7.70E-03	9.19E-03	2.20E-05	7.70E-03	9.19E-03	8.60E-06	3.01E-03	3.59E-03	8.60E-06	3.01E-03	3.59E-03	7.70E-03	0.009
Acetaldehyde	1.30E-03	4.55E-01	5.43E-01		0.00E+00	0.00E+00		0.00E+00	0.00E+00		0.00E+00	0.00E+00	4.55E-01	0.543
Acrolein	2.60E-05	9.10E-03	1.09E-02		0.00E+00	0.00E+00		0.00E+00	0.00E+00		0.00E+00	0.00E+00	9.10E-03	0.011
Antimony	1.80E-07	6.30E-05	7.52E-05	1.80E-07	6.30E-05	7.52E-05	1.80E-07	6.30E-05	7.52E-05	1.80E-07	6.30E-05	7.52E-05	6.30E-05	0.000
Anthracene[3]	3.10E-06	1.09E-03	1.30E-03	3.10E-06	1.09E-03	1.30E-03	2.20E-07	7.70E-05	9.19E-05	2.20E-07	7.70E-05	9.19E-05	1.09E-03	0.001
Arsenic	5.60E-07	1.96E-04	2.34E-04	5.60E-07	1.96E-04	2.34E-04	5.60E-07	1.96E-04	2.34E-04	5.60E-07	1.96E-04	2.34E-04	1.96E-04	0.000
Benzene	3.90E-04	1.37E-01	1.63E-01	3.90E-04	1.37E-01	1.63E-01	3.90E-04	1.37E-01	1.63E-01	3.90E-04	1.37E-01	1.63E-01	1.37E-01	0.163
Benzo(a)anthracene[3]	2.10E-07	7.35E-05	8.77E-05	2.10E-07	7.35E-05	8.77E-05	2.10E-07	7.35E-05	8.77E-05	2.10E-07	7.35E-05	8.77E-05	7.35E-05	0.000
Benzo(a)pyrene[3]	9.80E-09	3.43E-06	4.09E-06	9.80E-09	3.43E-06	4.09E-06	9.80E-09	3.43E-06	4.09E-06	9.80E-09	3.43E-06	4.09E-06	3.43E-06	0.000
Benzo(b)fluoranthene[3]	1.00E-07	3.50E-05	4.18E-05	1.00E-07	3.50E-05	4.18E-05	1.00E-07	3.50E-05	4.18E-05	1.00E-07	3.50E-05	4.18E-05	3.50E-05	0.000
Benzo(e)pyrene[3]	1.10E-07	3.85E-05	4.60E-05	1.10E-07	3.85E-05	4.60E-05	1.10E-07	3.85E-05	4.60E-05	1.10E-07	3.85E-05	4.60E-05	3.85E-05	0.000
Benzo(g,h,i)perylene[3]	4.00E-08	1.40E-05	1.67E-05	4.00E-08	1.40E-05	1.67E-05	4.00E-08	1.40E-05	1.67E-05	4.00E-08	1.40E-05	1.67E-05	1.40E-05	0.000
Benzo(k)fluoranthene[3]	4.10E-08	1.44E-05	1.71E-05	4.10E-08	1.44E-05	1.71E-05	4.10E-08	1.44E-05	1.71E-05	4.10E-08	1.44E-05	1.71E-05	1.44E-05	0.000
Beryllium	0.00E+00	0.00E+00	0.00E+00	0.00E+00	0.00E+00	0.00E+00	0.00E+00	0.00E+00	0.00E+00	0.00E+00	0.00E+00	0.00E+00	0.00E+00	0.000
1,3-Butadiene		0.00E+00	0.00E+00		0.00E+00	0.00E+00		0.00E+00	0.00E+00		0.00E+00	0.00E+00	0.00E+00	0.000
Cadmium	4.10E-07	1.44E-04	1.71E-04	4.10E-07	1.44E-04	1.71E-04	4.10E-07	1.44E-04	1.71E-04	4.10E-07	1.44E-04	1.71E-04	1.44E-04	0.000
Carbon Disulfide		0.00E+00	0.00E+00		0.00E+00	0.00E+00		0.00E+00	0.00E+00		0.00E+00	0.00E+00	0.00E+00	0.000
Chromium	5.50E-06	1.93E-03	2.30E-03	5.50E-06	1.93E-03	2.30E-03	5.50E-06	1.93E-03	2.30E-03	5.50E-06	1.93E-03	2.30E-03	1.93E-03	0.002
Hexavalent Chromium	4.50E-07	1.58E-04	1.88E-04	4.50E-07	1.58E-04	1.88E-04	4.50E-07	1.58E-04	1.88E-04	4.50E-07	1.58E-04	1.88E-04	1.58E-04	0.000
Chrysene[3]	1.80E-07	6.30E-05	7.52E-05	1.80E-07	6.30E-05	7.52E-05	1.80E-07	6.30E-05	7.52E-05	1.80E-07	6.30E-05	7.52E-05	6.30E-05	0.000
Cobalt	2.60E-08	9.10E-06	1.09E-05	2.60E-08	9.10E-06	1.09E-05	2.60E-08	9.10E-06	1.09E-05	2.60E-08	9.10E-06	1.09E-05	9.10E-06	0.000
Cumene		0.00E+00	0.00E+00		0.00E+00	0.00E+00		0.00E+00	0.00E+00		0.00E+00	0.00E+00	0.00E+00	0.000
Dibenzo(a,h)anthracene[3]		0.00E+00	0.00E+00		0.00E+00	0.00E+00		0.00E+00	0.00E+00		0.00E+00	0.00E+00	0.00E+00	0.000
Dichlorobenzene		0.00E+00	0.00E+00		0.00E+00	0.00E+00		0.00E+00	0.00E+00		0.00E+00	0.00E+00	0.00E+00	0.000
Ethyl Benzene	2.40E-04	8.40E-02	1.00E-01	2.40E-04	8.40E-02	1.00E-01	2.40E-04	8.40E-02	1.00E-01	2.40E-04	8.40E-02	1.00E-01	8.40E-02	0.100
Fluoranthene[3]	6.10E-07	2.14E-04	2.55E-04	6.10E-07	2.14E-04	2.55E-04	6.10E-07	2.14E-04	2.55E-04	6.10E-07	2.14E-04	2.55E-04	2.14E-04	0.000
Fluorene[3]	1.10E-05	3.85E-03	4.60E-03	1.10E-05	3.85E-03	4.60E-03	3.80E-06	1.33E-03	1.59E-03	3.80E-06	1.33E-03	1.59E-03	3.85E-03	0.005
Formaldehyde	3.10E-03	1.09E+00	1.30E+00	3.10E-03	1.09E+00	1.30E+00	3.10E-03	1.09E+00	1.30E+00	3.10E-03	1.09E+00	1.30E+00	1.09E+00	1.295
Hexane	9.20E-04	3.22E-01	3.84E-01	9.20E-04	3.22E-01	3.84E-01	9.20E-04	3.22E-01	3.84E-01	9.20E-04	3.22E-01	3.84E-01	3.22E-01	0.384
HCl	2.10E-04	7.35E-02	8.77E-02		0.00E+00	0.00E+00		0.00E+00	0.00E+00		0.00E+00	0.00E+00	7.35E-02	0.088
Indeno(1,2,3-cd)pyrene[3]	7.00E-09	2.45E-06	2.92E-06	7.00E-09	2.45E-06	2.92E-06	7.00E-09	2.45E-06	2.92E-06	7.00E-09	2.45E-06	2.92E-06	2.45E-06	0.000
Lead	1.50E-05	5.25E-03	6.27E-03	1.50E-05	5.25E-03	6.27E-03	6.20E-07	2.17E-04	2.59E-04	6.20E-07	2.17E-04	2.59E-04	5.25E-03	0.006
Manganese	7.70E-06	2.70E-03	3.22E-03	7.70E-06	2.70E-03	3.22E-03	7.70E-06	2.70E-03	3.22E-03	7.70E-06	2.70E-03	3.22E-03	2.70E-03	0.003
Mercury	2.60E-06	9.10E-04	1.09E-03	2.60E-06	9.10E-04	1.09E-03	2.40E-07	8.40E-05	1.00E-04	2.40E-07	8.40E-05	1.00E-04	9.10E-04	0.001
Methyl Chloroform	4.80E-05	1.68E-02	2.01E-02	4.80E-05	1.68E-02	2.01E-02	4.80E-05	1.68E-02	2.01E-02	4.80E-05	1.68E-02	2.01E-02	1.68E-02	0.020
Methyl Ethyl Ketone	2.00E-05	7.00E-03	8.36E-03		0.00E+00	0.00E+00		0.00E+00	0.00E+00		0.00E+00	0.00E+00	7.00E-03	0.008
2-Methylnaphthalene[3]	1.70E-04	5.95E-02	7.10E-02	1.70E-04	5.95E-02	7.10E-02	7.40E-05	2.59E-02	3.09E-02	7.40E-05	2.59E-02	3.09E-02	5.95E-02	0.071
3-Methylchloranthrene[3]		0.00E+00	0.00E+00		0.00E+00	0.00E+00		0.00E+00	0.00E+00		0.00E+00	0.00E+00	0.00E+00	0.000
Naphthalene[3]	6.50E-04	2.28E-01	2.72E-01	6.50E-04	2.28E-01	2.72E-01	9.00E-05	3.15E-02	3.76E-02	9.00E-05	3.15E-02	3.76E-02	2.28E-01	0.272
Nickel	6.30E-05	2.21E-02	2.63E-02	6.30E-05	2.21E-02	2.63E-02	6.30E-05	2.21E-02	2.63E-02	6.30E-05	2.21E-02	2.63E-02	2.21E-02	0.026
Pentane		0.00E+00	0.00E+00		0.00E+00	0.00E+00		0.00E+00	0.00E+00		0.00E+00	0.00E+00	0.00E+00	0.000
Perylene[3]	8.80E-09	3.08E-06	3.68E-06	8.80E-09	3.08E-06	3.68E-06	8.80E-09	3.08E-06	3.68E-06	8.80E-09	3.08E-06	3.68E-06	3.08E-06	0.000
Phenanthrene[3]	2.30E-05	8.05E-03	9.61E-03	2.30E-05	8.05E-03	9.61E-03	7.60E-06	2.66E-03	3.18E-03	7.60E-06	2.66E-03	3.18E-03	8.05E-03	0.010
Phosphorus	2.80E-05	9.80E-03	1.17E-02	2.80E-05	9.80E-03	1.17E-02	2.80E-05	9.80E-03	1.17E-02	2.80E-05	9.80E-03	1.17E-02	9.80E-03	0.012
POM (see below)													3.10E-01	0.370
Propionaldehyde	1.30E-04	4.55E-02	5.43E-02		0.00E+00	0.00E+00		0.00E+00	0.00E+00		0.00E+00	0.00E+00	4.55E-02	0.054
Pyrene[3]	3.00E-06	1.05E-03	1.25E-03	3.00E-06	1.05E-03	1.25E-03	5.40E-07	1.89E-04	2.26E-04	5.40E-07	1.89E-04	2.26E-04	1.05E-03	0.001
Quinone	1.60E-04	5.60E-02	6.69E-02		0.00E+00	0.00E+00		0.00E+00	0.00E+00		0.00E+00	0.00E+00	5.60E-02	0.067
Selenium	3.50E-07	1.23E-04	1.46E-04	3.50E-07	1.23E-04	1.46E-04	3.50E-07	1.23E-04	1.46E-04	3.50E-07	1.23E-04	1.46E-04	1.23E-04	0.000
Styrene		0.00E+00	0.00E+00		0.00E+00	0.00E+00		0.00E+00	0.00E+00		0.00E+00	0.00E+00	0.00E+00	0.000
2,3,7,8-TCDD	2.10E-13	7.35E-11	8.77E-11	2.10E-13	7.35E-11	8.77E-11		0.00E+00	0.00E+00		0.00E+00	0.00E+00	7.35E-11	0.000
Toluene	2.90E-03	1.02E+00	1.21E+00	2.90E-03	1.02E+00	1.21E+00	1.50E-04	5.25E-02	6.27E-02	1.50E-04	5.25E-02	6.27E-02	1.02E+00	1.212
Total PCDD/PCDF[3]	1.2E-10	4.2E-08	5.0E-08	1.2E-10	4.2E-08	5.0E-08							4.20E-08	0.000
Xylene	2.00E-04	7.00E-02	8.36E-02	2.00E-04	7.00E-02	8.36E-02	2.00E-04	7.00E-02	8.36E-02	2.00E-04	7.00E-02	8.36E-02	7.00E-02	0.084
TOTALS:			4.45			3.68			2.23			2.23	3.73	4.45

1) Metals: Emission factors from AP-42 (3/04), Table 11.1-12, for fabric filter. EF expressed in pounds of pollutant per ton of HMA produced.

2) Organic Pollutants: Emission factors from AP-42 (3/04), Table 11.1-10., for fabric filter. For propane, the EFs for natural gas have been applied. EF for HCl from RFO combustion from AP-42 (3/04), Table 11.1-8. EFs expressed in pounds of pollutant per ton of HMA produced.

3) POM: Maximum PTE estimates for POM based on polycyclic organic matter mixture as defined by 1900 CAA Amendments. Compounds included in the mixture are denoted in the table. To avoid double counting, the total, maximum PTE estimates do not include POM (i.e., individual compounds are summed separately) or 2, 3, 7, 8-TCDD (included in Total PCDD/PCDF).

Emission Unit:	Asphalt Tank Heater
Manufacturer/Model:	Gencor, Model HYCGO-100
Burner capacity (MMBTU/hr):	0.5
Fuel Type(s):	RFO, #2 Diesel, natural gas, or propane
Daily Hours of Operation (hr/d)	24
Annual Hours of Operation (hr/yr):	8760

Control Equipment:	None

RFO and Diesel (MMBTU/1000 gallons):	140	(AP-42, App A)
Nat. gas (BTU/scf):	1020	(AP-42, Table 1.4-1, footnote (a))
Propane (MMBTU/1000 gallons):	91.5	(AP-42, Table 1.5-1, footnote (a))
Propane (BTU/scf):	2504	(http://www.engineeringtoolbox.com/fuel-gases-combustion-values-d_510.html)

Potential To Emit - Criteria Pollutants

Criteria Pollutant	RFO			#2 Diesel			Nat. Gas			Propane			Max lb/hr	Max T/yr	Max 24hr Ave lb/hr	Max Annual Ave lb/hr
	EF	lb/hr	T/yr	EF	lb/hr	T/yr	EF	lb/hr	T/yr	EF	lb/hr	T/yr				
CO	2.10	0.0075	0.03	1.20	0.0043	0.02	8.50	0.0044	0.02	7.50	0.041	0.18	0.04	0.18	0.041	0.041
CO2e		78.88	345.47		100.30	439.33		98.40	430.98		69.85	305.96	100.30	439.33	100.304	100.304
NOx	16.00	0.0571	0.25	20.00	0.071	0.31	100.00	0.049	0.215	13.00	0.071	0.31	0.07	0.31	0.071	0.071
SO2	53.50	0.1911	0.84	0.213	0.001	0.003	0.60	0.0003	0.001	1.50	0.008	0.04	0.19	0.84	0.191	0.191
PM	56.10	0.2004	0.88	2.00	0.007	0.03	7.60	0.0037	0.016	0.70	0.004	0.02	0.20	0.88	0.200	0.200
PM10	48.45	0.1730357	0.76	1.00	0.004	0.02	7.60	0.0037	0.016	0.70	0.004	0.02	0.173	0.76	0.173	0.173
PM2.5	1.79	0.0063771	0.03	0.25	0.001	0.004	7.60	0.0037	0.016	0.70	0.004	0.02	0.006	0.03	0.006	0.006
VOC	1.00	0.0036	0.02	0.25	0.001	0.004	5.50	0.0027	0.012	1.00	0.005	0.02	0.01	0.02	0.005	0.005
Lead	0.50	0.0018	0.01	9.0E-06	4.5E-06	1.97E-05	5.0E-04	0.0000	1.07E-06	5.0E-04	0.000	4.37E-07	0.00	0.01	0.002	0.002

Emission Factor Information:

1) Carbon Monoxide: For diesel and natural gas, emission factors from AP-42 (3/04), Table 11.1-13. For RFO, EF from AP-42 (10/96), Table 1.11-2, for Atomizing burner. For propane, EF from AP-42 (7/08), Table 1.5-1,from AP-42 (7/08), Table 1.5-1, for propane combustion in commercial boilers. EFs for RFO, diesel, and propane are expressed in pounds of CO per 1000 gallons of fuel fired. EF for natural gas expressed in pounds of CO per MMscf of gas fired.

2) Carbon Dioxide Equivalent: Refer to Greenhouse Gases table for calculation methodology.

3) Nitrogen Oxides: For diesel, emission factor from AP-42 (5/10), Table 1.3-1, for Boilers < 100 MMBTU/hr. For RFO, EF from AP-42 (10/96), Table 1.11-2, for Atomizing burner. For natural gas, EF from AP-42 (7/98), Table 1.4-1, for uncontrolled, small boilers. EF for propane from AP-42 (7/08), Table 1.5-1, for propane combustion in commercial boilers. EFs for RFO, diesel, and propane expressed in pounds of NOx per 1000 gallons. EF for natural gas expressed in pounds of NOx per MMscf.

4) Sulfur Dioxide: For diesel, emission factor from AP-42 (5/10), Table 1.3-1, for Boilers < 100 MMBTU/hr; sulfur content is 0.0015%. For RFO, EF from AP-42 (10/96), Table 1.11-2, for Atomizing burner; sulfur content is 0.5%, per information from vendor. For natural gas, EF from AP-42 (7/98), Table 1.4-2. For propane, EF from AP-42 (7/08), Table 1.5-1, for propane combustion in commercial boilers; sulfur content assumed to be ≤15 gr/100 scf (Gas Processors Association Engineering Data Book, 1972). EFs for RFO, diesel, and propane expressed in pounds of SO2 per 1000 gallons. EF for natural gas expressed in pounds of SO2 per MMscf.

5) Particulate Matter: For diesel, emission factor from AP-42 (5/10), Table 1.3-6. For RFO, EF from AP-42 (10/96), Table 1.11-1, for Atomizing burner; 0.85% ash content, per info from vendor. EF for natural gas from AP-42 (7/98), Table 1.4-2. EF for propane from AP-42 (7/08), Table 1.5-1, for propane combustion in commercial boilers. EFs for RFO, diesel, and propane expressed in pounds of PM per 1000 gallons. EF for natural gas expressed in pounds of PM per MMscf.

6) PM-10: For diesel, emission factor from AP-42 (5/10), Table 1.3-6. For RFO, EF from AP-42 (10/96), Table 1.11-1, for Atomizing burner; 0.85% ash content, per info from vendor. EF for natural gas from AP-42 (7/98), Table 1.4-2, footnote c). EF for propane from AP-42 (7/08), Table 1.5-1, for propane combustion in commercial boilers, per footnote d), all PM assumed to be PM-10. EFs for RFO, diesel, and propane expressed in pounds of PM per 1000 gallons. EF for natural gas expressed in pounds of PM per MMscf.

7) PM-2.5: For diesel, emission factor from AP-42 (5/10), Table 1.3-6. For RFO, EF from AP-42 (5/10), Table 1.3-7, for Residual Oil, assuming No. 6 oil with a sulfur content of 0.5%, per vendor. EF for natural gas from AP-42 (7/98), Table 1.4-2, footnote c). EF for propane from AP-42 (7/08), Table 1.5-1, for propane combustion in commercial boilers, all PM assumed to be PM-2.5. EFs for RFO, diesel, and propane expressed in pounds of PM per 1000 gallons. EF for natural gas expressed in pounds of PM per MMscf.

8) VOC: For diesel, emission factor from AP-42 (5/10), Table 1.3-3, for TOC from Industrial boilers. For RFO, EF from AP-42 (10/96), Table 1.11-3, for TOC from Atomizing burner. For natural gas, EF from AP-42 (7/98), Table 1.4-2. For propane, EF from AP-42 (7/08), Table 1.5-1, for TOC from commercial boilers. EFs for RFO, diesel, and propane expressed in pounds of VOC per 1000 gallons. EF for natural gas expressed in pounds of VOC per MMscf of gas fired.

9) Lead: For diesel, emission factor from AP-42 (5/10), Table 1.3-10. For RFO, EF from AP-42 (10/96), Table 1.11-1, for Atomizing burner, 0.5% lead, per vendor's specifications. EF for natural gas from AP-42 (7/98), Table 1.4-2. For propane, EF for natural gas was applied. EF for RFO expressed in pounds of Pb per 1000 gallons. EF for diesel expressed in pounds Pb per MMBTU. EFs for natural gas and propane expressed in pounds of Pb per MMscf.

Potential To Emit - Non-Carcinogenic TAPs

Non-Carcinogen TAP	RFO			#2 Diesel			Nat. Gas			Propane			Max lb/hr	Max T/yr	Max 24hr Ave lb/hr	Max Annual Ave lb/hr
	EF	lb/hr	T/yr	EF	lb/hr	T/yr	EF	lb/hr	T/yr	EF	lb/hr	T/yr				
Antimony	4.50E-03	1.61E-05	7.04E-05										1.61E-05	7.04E-05	1.61E-05	1.61E-05
Barium							4.40E-03	2.16E-06	9.45E-06	4.40E-03	8.79E-07	3.85E-06	2.16E-06	9.45E-06	2.16E-06	2.16E-06
Chromium	1.80E-01	6.43E-04	2.82E-03	3.00E-06	1.50E-06	6.57E-06	1.40E-03	6.86E-07	3.01E-06	1.40E-03	2.80E-07	1.22E-06	6.43E-04	2.82E-03	6.43E-04	6.43E-04
Cobalt	5.20E-03	1.86E-05	8.13E-05				8.40E-05	4.12E-08	1.80E-07	8.40E-05	1.68E-08	7.35E-08	1.86E-05	8.13E-05	1.86E-05	1.86E-05
Copper				6.00E-06	3.00E-06	1.31E-05	8.50E-04	4.17E-07	1.83E-06	8.50E-04	1.70E-07	7.43E-07	3.00E-06	1.31E-05	3.00E-06	3.00E-06
Dichlorobenzene	8.00E-07	2.9E-09	1.25E-08				1.20E-03	5.88E-07	2.58E-06	1.20E-03	2.40E-07	1.05E-06	5.88E-07	2.58E-06	5.88E-07	5.88E-07
Hexane							1.8	8.82E-04	3.86E-03	1.8	3.59E-04	1.57E-03	8.82E-04	3.86E-03	8.82E-04	8.82E-04
Hydrochloric Acid	6.6	2.4E-02	1.03E-01			0.00E+00			0.00E+00			0.00E+00	2.36E-02	1.03E-01	2.36E-02	2.36E-02
Manganese	5.00E-02	1.79E-04	7.82E-04	6.00E-06	3.00E-06	1.31E-05	3.80E-04	1.86E-07	8.16E-07	3.80E-04	7.59E-08	3.32E-07	1.79E-04	7.82E-04	1.79E-04	1.79E-04
Mercury				3.00E-06	1.50E-06	6.57E-06	2.60E-04	1.27E-07	5.58E-07	2.60E-04	5.19E-08	2.27E-07	1.50E-06	6.57E-06	1.50E-06	1.50E-06
Molybdenum							1.10E-03	5.39E-07	2.36E-06	1.10E-03	2.20E-07	9.62E-07	5.39E-07	2.36E-06	5.39E-07	5.39E-07
Naphthalene	9.20E-05	3.3E-07	1.4E-06	1.70E-02	6.1E-05	2.7E-04	6.10E-04	2.99E-07	1.31E-06	6.10E-04	1.22E-07	5.34E-07	6.07E-05	2.66E-04	6.07E-05	6.07E-05
Pentane							2.60E+00	1.27E-03	5.58E-03	2.60E+00	5.19E-04	2.27E-03	1.27E-03	5.58E-03	1.27E-03	1.27E-03
Phenol	2.80E-05	1.0E-07	4.4E-07										1.00E-07	4.38E-07	1.00E-07	1.00E-07
Selenium				1.50E-05	7.50E-06	3.29E-05	2.40E-05	1.18E-08	5.15E-08	2.40E-05	4.79E-09	2.10E-08	7.50E-06	3.29E-05	7.50E-06	7.50E-06
Toluene							3.40E-03	1.67E-06	7.30E-06	3.40E-03	6.79E-07	2.97E-06	1.67E-06	7.30E-06	1.67E-06	1.67E-06
Vanadium							2.30E-03	1.13E-06	4.94E-06	2.30E-03	4.59E-07	2.01E-06	1.13E-06	4.94E-06	1.13E-06	1.13E-06
Zinc				4.00E-06	2.00E-06	8.76E-06	2.90E-02	1.42E-05	6.23E-05	2.90E-02	5.79E-06	2.54E-05	1.42E-05	6.23E-05	1.42E-05	1.42E-05
TOTALS:			1.07E-01			3.47E-04			9.54E-03			3.89E-03	0.027	0.117		

Potential To Emit - Carcinogenic TAPs

Carcinogen TAPs	RFO			#2 Diesel			Nat. Gas			Propane			Max lb/hr	Max T/yr	Max 24hr Ave lb/hr	Max Annual Ave lb/hr
	EF	lb/hr	T/yr	EF	lb/hr	T/yr	EF	lb/hr	T/yr	EF	lb/hr	T/yr				
Acenaphthene				5.30E-04	1.9E-06	8.3E-06	1.80E-06	8.82E-10	3.86E-09	1.80E-06	3.59E-10	1.57E-09	1.89E-06	8.29E-06	1.89E-06	1.89E-06
Acenaphthylene				2.00E-04	7.1E-07	3.1E-06	1.80E-06	8.82E-10	3.86E-09	1.80E-06	3.59E-10	1.57E-09	7.14E-07	3.13E-06	7.14E-07	7.14E-07
Anthracene	1.00E-04	3.6E-07	1.6E-06	1.80E-04	6.4E-07	2.8E-06	2.40E-06	1.18E-09	5.15E-09	2.40E-06	4.79E-10	2.10E-09	6.43E-07	2.82E-06	6.43E-07	6.43E-07
Arsenic	6.00E-02	2.14E-04	9.39E-04	4.00E-06	2.00E-06	8.76E-06	2.00E-04	9.80E-08	4.29E-07	2.00E-04	3.99E-08	1.75E-07	2.14E-04	9.39E-04	2.14E-04	2.14E-04
Benzene							2.10E-03	1.03E-06	4.51E-06	2.10E-03	4.19E-07	1.84E-06	1.03E-06	4.51E-06	1.03E-06	1.03E-06
Benzo(a)pyrene	4.00E-03	1.4E-05	6.3E-05			0.00E+00	1.20E-06	5.88E-10	2.58E-09	1.20E-06	2.40E-10	1.05E-09	1.43E-05	6.26E-05	1.43E-05	1.43E-05
Benzo(g,h,i)perylene							1.20E-06	5.88E-10	2.58E-09	1.20E-06	2.40E-10	1.05E-09	5.88E-10	2.58E-09	5.88E-10	5.88E-10
Beryllium	1.80E-03	6.43E-06	2.82E-05	3.00E-06	1.50E-06	6.57E-06	1.20E-05	5.88E-09	2.58E-08	1.20E-05	2.40E-09	1.05E-08	6.43E-06	2.82E-05	6.43E-06	6.43E-06
Bis(2-ethylhexyl)phthalate	2.20E-03	7.9E-06	3.4E-05										7.86E-06	3.44E-05	7.86E-06	7.86E-06
Cadmium	1.20E-02	4.29E-05	1.88E-04	3.00E-06	1.50E-06	6.57E-06	1.10E-03	5.39E-07	2.36E-06	1.10E-03	2.20E-07	9.62E-07	4.29E-05	1.88E-04	4.29E-05	4.29E-05
Dioxin/Furans (see below)													8.21E-10	3.60E-09		1.36E-12
Fluoranthene				4.40E-05	1.6E-07	6.9E-07	3.00E-06	1.47E-09	6.44E-09	3.00E-06	5.99E-10	2.62E-09	1.57E-07	6.88E-07	1.57E-07	1.57E-07
Fluorene				3.20E-05	1.1E-07	5.0E-07	2.80E-06	1.37E-09	6.01E-09	2.80E-06	5.59E-10	2.45E-09	1.14E-07	5.01E-07	1.14E-07	1.14E-07
Formaldehyde				6.10E-02	2.2E-04	9.5E-04	7.50E-02	3.68E-05	1.61E-04	7.50E-02	1.50E-05	6.56E-05	2.18E-04	9.54E-04	2.18E-04	2.18E-04
3-Methylchloranthrene							1.80E-06	8.82E-10	3.86E-09	1.80E-06	3.59E-10	1.57E-09	8.82E-10	3.86E-09	8.82E-10	8.82E-10
2-Methylnaphthalene							2.40E-05	1.18E-08	5.15E-08	2.40E-05	4.79E-09	2.10E-08	1.18E-08	5.15E-08	1.18E-08	1.18E-08
Naphthalene	9.20E-05	3.3E-07	1.4E-06	1.70E-02	6.1E-05	2.7E-04	6.10E-04	2.99E-07	1.31E-06	6.10E-04	1.22E-07	5.34E-07	6.07E-05	2.66E-04	6.07E-05	6.07E-05
Nickel	1.60E-01	5.71E-04	2.50E-03	3.00E-06	1.50E-06	6.57E-06	2.10E-03	1.03E-06	4.51E-06	2.10E-03	4.19E-07	1.84E-06	5.71E-04	2.50E-03	5.71E-04	5.71E-04
Phenanthrene	1.00E-04	3.6E-07	1.6E-06	4.90E-03	1.8E-05	7.7E-05	1.70E-05	8.33E-09	3.65E-08	1.70E-05	3.39E-09	1.49E-08	1.75E-05	7.67E-05	1.75E-05	1.75E-05
POM (see below)	1.20E-02	4.3E-05	1.9E-04	3.30E-03	1.2E-05	5.2E-05	1.14E-05	5.59E-09	2.45E-08	1.14E-05	2.28E-09	9.97E-09	4.29E-05	1.88E-04	4.29E-05	4.29E-05
Pyrene	8.30E-06	3.0E-08	1.3E-07	3.20E-05	1.1E-07	5.0E-07	5.00E-06	2.45E-09	1.07E-08	5.00E-06	9.98E-10	4.37E-09	1.14E-07	5.01E-07	1.14E-07	1.14E-07
TOTALS:			3.95E-03			1.39E-03			1.74E-04			7.10E-05	0.001	0.005		

Emission Factor Information:

1) Metals: For diesel, emission factors from AP-42 (5/10), Table 1.3-10. For RFO, EFs from AP-42 (10/96), Table 1.11-4, for Atomizing burner. For natural gas, EFs from AP-42 (7/98), Table 1.4-4. For propane, EFs for nat. gas were applied. EFs for diesel expressed in pounds of pollutant per MMBTU. EFs for RFO expressed in pounds of pollutant per 1000 gallons. EFs for natural gas and propane expressed in pounds of pollutant per MMscf.

2) Organic Pollutants: For diesel, emission factors from AP-42 (5/10), Table 1.3-8, for Distillate oil, and AP-42 (3/04), Table 11.1-13, for Hot oil system fired with No. 2 fuel oil. For diesel, EF for POM taken from Table 1.3-8 rather than summing PAHs, as this is the more conservative emissions estimate. For RFO, EFs from AP-42 (10/96), Table 1.11-5, for Atomizing burner (i.e., except for bis(2-ethylhexyl)phthalate, dichlorobeneze, benz(a)anthracene, and benzo(a)pyrene which rely on values for Vaporizing burner). For HCl from RFO, EF from AP-42 (10/96), Table 1.11-3; 0.1% weight used, per vendor information (i.e., <1000ppm for all halogens). For natural gas, EFs from AP-42 (7/98), Table 1.4-3. For propane, EFs for nat. gas were applied. EFs for diesel and RFO expressed in pounds of pollutant per 1000 gallons. EFs for natural gas and propane expressed in pounds of poilutant per MMscf.

3) Dioxin/Furans: Max Annual Ave value represents emissions from all dioxin/furan mixtures, expressed as equivalent emissions of 2,3,7,8-TCDD, per IDAPA 58.01.01.586. Refer to Dioxin/Furan Mixture table for caiculation methodology.

4) POM: Emission factors for POM based on polyaromatic hydrocarbon mixture identified in IDAPA 58.01.01.586. Refer to Polycyclic Organic Matter Mixture table for calculation methodology.

Polycyclic Organic Matter Mixture

Polycyclic Organic Matter (POM)	RFO			#2 Diesel			Nat. Gas			Propane		
	EF	lb/hr	T/yr	EF	lb/hr	T/yr	EF	lb/hr	T/yr	EF	lb/hr	T/yr
Benzo(a)anthracene	4.00E-03	1.43E-05	6.26E-05			0.00E+00	1.80E-06	8.82E-10	3.86E-09	1.80E-06	3.59E-10	1.57E-09
Benzo(b)fluoranthene			0.00E+00	1.00E-04	3.6E-07	1.6E-06	1.80E-06	8.82E-10	3.86E-09	1.80E-06	3.59E-10	1.57E-09
Benzo(k)fluoranthene			0.00E+00			0.00E+00	1.80E-06	8.82E-10	3.86E-09	1.80E-06	3.59E-10	1.57E-09
Benzo(a)pyrene	4.00E-03	1.43E-05	6.26E-05			0.00E+00	1.20E-06	5.88E-10	2.58E-09	1.20E-06	2.40E-10	1.05E-09
Chrysene	4.00E-03	1.43E-05	6.26E-05			0.00E+00	1.80E-06	8.82E-10	3.86E-09	1.80E-06	3.59E-10	1.57E-09
Dibenzo(a,h)anthracene			0.00E+00			0.00E+00	1.20E-06	5.88E-10	2.58E-09	1.20E-06	2.40E-10	1.05E-09
Indeno(1,2,3-cd)pyrene			0.00E+00			0.00E+00	1.80E-06	8.82E-10	3.86E-09	1.80E-06	3.59E-10	1.57E-09
TOTALS:	1.20E-02		1.88E-04	3.30E-03		1.56E-06	1.14E-05		2.45E-08	1.14E-05		9.97E-09

Dioxin/Furan Mixture

Dioxin/Furan	RFO			#2 Diesel			Max lb/hr	Max T/yr	TEF	Adjusted Max Annual Ave lb/hr
	EF	lb/hr	T/yr	EF	lb/hr	T/yr				
1,2,3,4,7,8-HxCDD				6.90E-10	2.46E-12	1.08E-11	2.46E-12	1.08E-11	0.10	2.46E-13
1,2,3,7,8,9-HxCDD				7.60E-10	2.71E-12	1.19E-11	2.71E-12	1.19E-11	0.10	2.71E-13
HxCDD				6.20E-09	2.21E-11	9.70E-11	2.21E-11	9.70E-11		
1,2,3,4,6,7,8-Hp-CDD				1.50E-08	5.36E-11	2.35E-10	5.36E-11	2.35E-10	0.01	5.36E-13
HpCDD				2.00E-08	7.14E-11	3.13E-10	7.14E-11	3.13E-10		
Octa CDD				1.60E-07	5.71E-10	2.50E-09	5.71E-10	2.50E-09	0.0003	1.71E-13
Total PCDD				2.00E-07	7.14E-10	3.13E-09	7.14E-10	3.13E-09		
TCDF				3.30E-09	1.18E-11	5.16E-11	1.18E-11	5.16E-11		
PeCDF				4.80E-10	1.71E-12	7.51E-12	1.71E-12	7.51E-12		
HxCDF				2.00E-09	7.14E-12	3.13E-11	7.14E-12	3.13E-11		
1,2,3,4,6,7,8-HpCDF				3.50E-09	1.25E-11	5.48E-11	1.25E-11	5.48E-11	0.01	1.25E-13
HpCDF				9.70E-09	3.46E-11	1.52E-10	3.46E-11	1.52E-10		
Octa CDF				1.20E-08	4.29E-11	1.88E-10	4.29E-11	1.88E-10	0.0003	1.29E-14
Total PCDF				3.10E-08	1.11E-10	4.85E-10	1.11E-10	4.85E-10		
Total PCDD/PCDF				2.30E-07	8.21E-10	3.60E-09	8.21E-10	3.60E-09		
							TOTAL ADJUSTED:			1.36E-12

Emission Factor Information:

1) Organic Pollutants:

For diesel, emission factors from AP-42 (5/10), Table 1.3-8, for Distillate oil, and AP-42 (3/04), Table 11.1-13, for Hot oil system fired with No. 2 fuel oil.
For diesel, EF for POM taken from Table 1.3-8 rather than summing PAHs, as this is the more conservative emissions estimate.
For RFO, EFs from AP-42 (10/96), Table 1.11-5, for Atomizing burner (i.e., except for dichlorobenezie, benz(a)anthracene, and benzo(a)pyrene which rely on values for Vaporizing burner). For natural gas, EFs from AP-42 (7/98), Table 1.4-3. For propane, EFs for nat. gas were applied.
EFs for diesel and RFO expressed in pounds of pollutant per 1000 gallons. EFs for natural gas and propane expressed in pounds of pollutant per MMscf.

2) Toxic Equivalency Factors:

2005, Van den Berg, et al, The 2005 World Health Organization Reevaluation of Human and Mammalian Toxic Equivalency Factors for Dioxins and Dioxin-Like Compounds, Toxicological Sciences 93(2), 223-241 (2006). Accessible at http://toxsci.oxfordjournals.org/cgi/reprint/93/2/223. Use of the 2005 WHO toxic equivalency factors (TEFs) is consistent with current EPA recommendations for TRI reporting (72 FR 26544, May 10, 2007). (DAPA 58.01.01.586, TAPs Carcinogenic Increments:
Total of adjusted emission rates are treated as a single TAP (2,3,7,8 TCDD)

Greenhouse Gases

GHG	RFO			#2 Diesel			Nat. Gas			Propane			Max lb/hr	Max T/yr
	EF	lb/hr	T/yr	EF	lb/hr	T/yr	EF	lb/hr	T/yr	EF	lb/hr	T/yr		
CO2	22000.0	78.57	344.14	28000.0	100.00	438.00	2.0E+05	98.04	429.41	12500.0	68.31	299.18	100.00	438.00
Methane	0.216	0.001	0.003	0.216	0.001	0.003	2.3	0.001	0.005	0.2	0.001	0.005	0.001	0.005
N2O	0.260	0.001	0.004	0.260	0.001	0.004	2.2	0.001	0.005	0.9	0.005	0.02	0.005	0.02
CO2e		78.88	345.47		100.30	439.33		98.40	430.98		69.85	305.96	100.30	439.33

1) Carbon Dioxide:

For RFO, EF from AP-42, Table 1.11-3 (10/96), for Atomizing burner. Emission factors for #2 diesel and nat. gas from AP-42 (3/04), Table 11.1-13.
For propane, EF from AP-42 (7/08), Table 1.5-1, for propane combustion in commercial boilers. EFs for RFO, diesel, and propane are expressed in pounds of CO2 per 1000 gallons.
EF for natural gas expressed in pounds of CO2 per MMscf of gas fired.

2) Methane:

For #2 diesel, emission factors from AP-42 (5/10), Table 1.3-3, Commercial/institutional/residential combustors, Distillate oil fired; EF expressed in pounds of methane per 1000 gallons.
For RFO, the EF for #2 diesel was applied. For natural gas, EF from AP-42 (7/98), Table 1.4-2, uncontrolled; EF expressed in pounds of methane per MMSCF.
For propane, EF from AP-42 (7/08), Table 1.5-1; EF expressed in pounds methane per 1000 gallons.

3) N2O:

For #2 diesel, emission factor from AP-42 (5/10), Table 1.3-8; EF expressed in pounds of N2O per 1000 gallons. For RFO, the EF for #2 diesel was applied. For natural gas, EF from AP-42 (7/98), Table 1.4-2, uncontrolled; EF expressed in pounds of N2O per MMSCF. For propane, EF from AP-42 (7/08), Table 1.5-1; EF expressed in lb N2O per 1000 gallons.

4) CO2e:

The sum of CO2, methane, and N2O expressed as carbon dioxide equivalent. A global warming potential of 21 was applied to methane. A GWP of 310 was applied to N2O.

Potential To Emit - HAPs

HAP	RFO			#2 Diesel			Nat. Gas			Propane			Max lb/hr	Max T/yr
	EF	lb/hr	T/yr	EF	lb/hr	T/yr	EF	lb/hr	T/yr	EF	lb/hr	T/yr		
Acenaphthene[3]				5.30E-04	1.9E-06	8.3E-06	1.80E-06	8.82E-10	3.86E-09	1.80E-06	3.59E-10	1.57E-09	1.89E-06	8.29E-06
Acenaphthylene[3]				2.00E-04	7.1E-07	3.1E-06	1.80E-06	8.82E-10	3.86E-09	1.80E-06	3.59E-10	1.57E-09	7.14E-07	3.13E-06
Acetaldehyde		0.0E+00	0.0E+00		0.0E+00	0.0E+00		0.0E+00	0.0E+00		0.0E+00	0.0E+00	0.00E+00	0.00E+00
Acrolein		0.0E+00	0.0E+00		0.0E+00	0.0E+00		0.0E+00	0.0E+00		0.0E+00	0.0E+00	0.00E+00	0.00E+00
Antimony	4.50E-03	1.61E-05	7.04E-05										1.61E-05	7.04E-05
Anthracene[3]	1.00E-04	3.6E-07	1.6E-06	1.80E-04	6.4E-07	2.8E-06	2.40E-06	1.18E-09	5.15E-09	2.40E-06	4.79E-10	2.10E-09	6.43E-07	2.82E-06
Arsenic	6.00E-02	2.14E-04	9.39E-04	4.00E-06	2.00E-06	8.76E-06	2.00E-04	9.80E-08	4.29E-07	2.00E-04	3.99E-08	1.75E-07	2.14E-04	9.39E-04
Benzene							2.10E-03	1.03E-06	4.51E-06	2.10E-03	4.19E-07	1.84E-06	1.03E-06	4.51E-06
Benzo(a)anthracene[3]	4.00E-03	1.4E-05	6.3E-05			0.00E+00	1.80E-06	8.82E-10	3.86E-09	1.80E-06	3.59E-10	1.57E-09	1.43E-05	6.26E-05
Benzo(a)pyrene[3]	4.00E-03	1.4E-05	6.3E-05			0.00E+00	1.20E-06	5.88E-10	2.58E-09	1.20E-06	2.40E-10	1.05E-09	1.43E-05	6.26E-05
Benzo(b)fluoranthene[3]			0.00E+00	1.00E-04	3.6E-07	1.6E-06	1.80E-06	8.82E-10	3.86E-09	1.80E-06	3.59E-10	1.57E-09	3.57E-07	1.56E-06
Benzo(e)pyrene[3]		0.0E+00	0.0E+00		0.0E+00	0.0E+00		0.0E+00	0.0E+00		0.0E+00	0.0E+00	0.00E+00	0.00E+00
Benzo(g,h,i)perylene[3]							1.20E-06	5.88E-10	2.58E-09	1.20E-06	2.40E-10	1.05E-09	5.88E-10	2.58E-09
Benzo(k)fluoranthene[3]			0.00E+00			0.00E+00	1.80E-06	8.82E-10	3.86E-09	1.80E-06	3.59E-10	1.57E-09	8.82E-10	3.86E-09
Beryllium	1.80E-03	6.43E-06	2.82E-05	3.00E-06	1.50E-06	6.57E-06	1.20E-05	5.88E-09	2.58E-08	1.20E-05	2.40E-09	1.05E-08	6.43E-06	2.82E-05
Bis(2-ethylhexyl)phthalate	2.20E-03	7.9E-06	3.4E-05										7.86E-06	3.44E-05
1,3-Butadiene		0.0E+00	0.0E+00		0.0E+00	0.0E+00		0.0E+00	0.0E+00		0.0E+00	0.0E+00	0.00E+00	0.00E+00
Cadmium	1.20E-02	4.29E-05	1.88E-04	3.00E-06	1.50E-06	6.57E-06	1.10E-03	5.39E-07	2.36E-06	1.10E-03	2.20E-07	9.62E-07	4.29E-05	1.88E-04
Carbon Disulfide		0.0E+00	0.0E+00		0.0E+00	0.0E+00		0.0E+00	0.0E+00		0.0E+00	0.0E+00	0.00E+00	0.00E+00
Chromium	1.80E-01	6.43E-04	2.82E-03	3.00E-06	1.50E-06	6.57E-06	1.40E-03	6.86E-07	3.01E-06	1.40E-03	2.80E-07	1.22E-06	6.43E-04	2.82E-03
Hexavalent Chromium		0.0E+00	0.0E+00		0.0E+00	0.0E+00		0.0E+00	0.0E+00		0.0E+00	0.0E+00	0.00E+00	0.00E+00
Chrysene[3]	4.00E-03	1.4E-05	6.3E-05			0.00E+00	1.80E-06	8.82E-10	3.86E-09	1.80E-06	3.59E-10	1.57E-09	1.43E-05	6.26E-05
Cobalt	5.20E-03	1.86E-05	8.13E-05				8.40E-05	4.12E-08	1.80E-07	8.40E-05	1.68E-08	7.35E-08	1.86E-05	8.13E-05
Cumene		0.0E+00	0.0E+00		0.0E+00	0.0E+00		0.0E+00	0.0E+00		0.0E+00	0.0E+00	0.00E+00	0.00E+00
Dibenzo(a,h)anthracene[3]			0.00E+00			0.00E+00	1.20E-06	5.88E-10	2.58E-09	1.20E-06	2.40E-10	1.05E-09	5.88E-10	2.58E-09
Dibutylphthalate	3.40E-05	1.2E-07	5.3E-07										1.21E-07	5.32E-07
Dichlorobenzene	8.00E-07	2.9E-09	1.3E-08				1.20E-03	5.88E-07	2.58E-06	1.20E-03	2.40E-07	1.05E-06	5.88E-07	2.58E-06
Ethyl Benzene		0.0E+00	0.0E+00		0.0E+00	0.0E+00		0.0E+00	0.0E+00		0.0E+00	0.0E+00	0.00E+00	0.00E+00
Fluoranthene[3]				4.40E-05	1.6E-07	6.9E-07	3.00E-06	1.47E-09	6.44E-09	3.00E-06	5.99E-10	2.62E-09	1.57E-07	6.88E-07
Fluorene[3]				3.20E-05	1.1E-07	5.0E-07	2.80E-06	1.37E-09	6.01E-09	2.80E-06	5.59E-10	2.45E-09	1.14E-07	5.01E-07
Formaldehyde				6.10E-02	2.2E-04	9.5E-04	7.50E-02	3.68E-05	1.61E-04	7.50E-02	1.50E-05	6.56E-05	2.18E-04	9.54E-04
Hexane							1.8	8.82E-04	3.86E-03	1.8	3.59E-04	1.57E-03	8.82E-04	3.86E-03
Hydrochloric Acid	6.6	2.4E-02	1.03E-01			0.00E+00			0.00E+00			0.00E+00	2.36E-02	1.03E-01
Indeno(1,2,3-cd)pyrene[3]			0.00E+00			0.00E+00	1.80E-06	8.82E-10	3.86E-09	1.80E-06	3.59E-10	1.57E-09	8.82E-10	3.86E-09
Lead	0.50	0.0018	0.01	9.0E-06	2.5E-10	1.97E-05	5.0E-04	0.0000	1.07E-06	5.0E-04	0.000	4.37E-07	0.00	0.01
Manganese	5.00E-02	1.79E-04	7.82E-04	6.00E-06	3.00E-06	1.31E-05	3.80E-04	1.86E-07	8.16E-07	3.80E-04	7.59E-08	3.32E-07	1.79E-04	7.82E-04
Mercury				3.00E-06	1.50E-06	6.57E-06	2.60E-04	1.27E-07	5.58E-07	2.60E-04	5.19E-08	2.27E-07	1.50E-06	6.57E-06
Methyl Chloroform		0.0E+00	0.0E+00		0.0E+00	0.0E+00		0.0E+00	0.0E+00		0.0E+00	0.0E+00	0.00E+00	0.00E+00
Methyl Ethyl Ketone		0.0E+00	0.0E+00		0.0E+00	0.0E+00		0.0E+00	0.0E+00		0.0E+00	0.0E+00	0.00E+00	0.00E+00
2-Methylnaphthalene[3]							1.80E-06	8.82E-10	3.86E-09	1.80E-06	3.59E-10	1.57E-09	8.82E-10	3.86E-09
3-Methylchloranthrene[3]							2.40E-05	1.18E-08	5.15E-08	2.40E-05	4.79E-09	2.10E-08	1.18E-08	5.15E-08
Naphthalene[3]	9.20E-05	3.3E-07	1.4E-06	1.70E-02	6.1E-05	2.7E-04	6.10E-04	2.99E-07	1.31E-06	6.10E-04	1.22E-07	5.34E-07	6.07E-05	2.66E-04
Nickel	1.60E-01	5.71E-04	2.50E-03	3.00E-06	1.50E-06	6.57E-06	2.10E-03	1.03E-06	4.51E-06	2.10E-03	4.19E-07	1.84E-06	5.71E-04	2.50E-03
Pentane							2.60E+00	1.27E-03	5.58E-03	2.60E+00	5.19E-04	2.27E-03	1.27E-03	5.58E-03
Peryiene[3]		0.0E+00	0.0E+00		0.0E+00	0.0E+00		0.0E+00	0.0E+00		0.0E+00	0.0E+00	0.00E+00	0.00E+00
Phenanthrene[3]	1.00E-04	3.6E-07	1.6E-06	4.90E-03	1.8E-05	7.7E-05	1.70E-05	8.33E-09	3.65E-08	1.70E-05	3.39E-09	1.49E-08	1.75E-05	7.67E-05
Phenol	2.80E-05	1.0E-07	4.4E-07										1.00E-07	4.38E-07
Phosphorus		0.0E+00	0.0E+00		0.0E+00	0.0E+00		0.0E+00	0.0E+00		0.0E+00	0.0E+00	0.00E+00	0.00E+00
POM (see below)													1.25E-04	5.48E-04
Propionaldehyde		0.0E+00	0.0E+00		0.0E+00	0.0E+00		0.0E+00	0.0E+00		0.0E+00	0.0E+00	0.00E+00	0.00E+00
Pyrene[3]	8.30E-06	3.0E-08	1.3E-07	3.20E-05	1.1E-07	5.0E-07	5.00E-06	2.45E-09	1.07E-08	5.00E-06	9.98E-10	4.37E-09	1.14E-07	5.01E-07
Selenium				1.50E-05	7.50E-06	3.29E-05	2.40E-05	1.18E-08	5.15E-08	2.40E-05	4.79E-09	2.10E-08	7.50E-06	3.29E-05
Styrene		0.0E+00	0.0E+00		0.0E+00	0.0E+00		0.0E+00	0.0E+00		0.0E+00	0.0E+00	0.00E+00	0.00E+00
2,3,7,8-TCDD		0.0E+00	0.0E+00		0.0E+00	0.0E+00		0.0E+00	0.0E+00		0.0E+00	0.0E+00	0.00E+00	0.00E+00
Toluene							3.40E-03	1.67E-06	7.30E-06	3.40E-03	6.79E-07	2.97E-06	1.67E-06	7.30E-06
Total PCDD/PCDF[3]				2.3E-07	8.2E-10	3.6E-09							8.21E-10	3.60E-09
Trichloroethylene		0.0E+00	0.0E+00		0.0E+00	0.0E+00		0.0E+00	0.0E+00		0.0E+00	0.0E+00	0.00E+00	0.00E+00
Xylene		0.0E+00	0.0E+00		0.0E+00	0.0E+00		0.0E+00	0.0E+00		0.0E+00	0.0E+00	0.00E+00	0.00E+00
TOTALS:			0.12			0.00			0.01			0.00	0.03	0.13

1) Metals: For diesel, emission factors from AP-42 (5/10), Table 1.3-10. For RFO, EFs from AP-42 (10/96), Table 1.11-4, for Atomizing burner. For natural gas, EFs from AP-42 (7/98), Table 1.4-4. For propane, EFs for nat. gas were applied. EFs for diesel expressed in pounds of pollutant per MMBTU. EFs for RFO expressed in pounds of pollutant per 1000 gallons. EFs for natural gas and propane expressed in pounds of pollutant per MMscf.

2) Organic Pollutants: For diesel, emission factors from AP-42 (5/10), Table 1.3-8, for Distillate oil, and AP-42 (3/04), Table 11.1-13. for Hot oil system fired with No. 2 fuel oil. For RFO, EFs from AP-42 (10/96), Table 1.11-5, for Atomizing burner (i.e., except for bis(2-ethylhexyl)phthalate, dichlorobeneze, benz(a)anthracene, and benzo(a)pyrene which rely on values for Vaporizing burner). For HCl from RFO, EF from AP-42 (10/96), Table 1.11-3; 0.1% weight used, per vendor information (i.e., <1000ppm for all halogens). For natural gas, EFs from AP-42 (7/98), Table 1.4-3. For propane, EFs for nat. gas were applied. EFs for diesel and RFO expressed in pounds of pollutant per 1000 gallons. EFs for natural gas and propane expressed in pounds of pollutant per MMscf.

3) POM: Maximum PTE estimates for POM based on polycyclic organic matter mixture as defined by 1900 CAA Amendments. Compounds included in the mixture are denoted in the table. To avoid double counting, the total, maximum PTE estimates do not include POM (i.e., individual compounds are summed separately) or 2, 3, 7, 8-TCDD (included in Total PCDD/PCDF).

Emission Unit:	Operations Generator
Manufacturer/Model:	Cummins, Model QST30-G2, 2006 model year
Fuel Type(s):	#2 Diesel
Rated Generator Capacity (kW):	800
Gross Engine Output (bhp):	1200
Calculated Fuel Consumption (gal/hr):	60
Calculated Capacity (MMBTU/hr):	8.4
Daily Hours of Operation (hr/d)	13.5
Annual Hours of Operation (hr/yr):	2578.5

Control Equipment:	Tier 2 Certified Engine

Diesel (MMBTU/1000 gallons):	140	(AP-42 (9/85), App A)
Average BSFC (BTU/hp-hr):	7000	(AP-42 (10/96), Table 3.4-1, footnote e)

Potential To Emit - Criteria Pollutants

Criteria Pollutant	#2 Diesel			Max 24hr Ave	Max Annual Ave
	EF	lb/hr	T/yr	lb/hr	lb/hr
CO	0.822	6.90	8.90	3.88	2.03
CO2e		1387.43	1788.74	780.43	408.39
NOx	1.50	12.60	16.24	7.09	3.71
SO2	0.0015	0.01	0.02	0.01	0.00
PM	0.047	0.39	0.51	0.22	0.12
PM10	0.047	0.39	0.51	0.22	0.12
PM2.5	0.056	0.47	0.60	0.26	0.14
VOC	0.305	2.56	3.30	1.44	0.75
Lead					

Emission Factor Information:

1) Carbon Monoxide: Emission factor from 40 CFR 89.112, Table 1, for Tier 2 engine >560kW. Expressed in pounds of CO per MMBTU fuel input.

2) Carbon Dioxide Equivalent: Refer to Greenhouse Gases table for calculation methodology.

3) Nitrogen Oxides: Emission factor from 40 CFR 89.112, Table 1, for Tier 2 engine >560kW. Applied EF for NMHC+NOx, assuming 100% NOx. EF expressed in pounds of NOx per MMBTU fuel input.

4) Sulfur Dioxide: Emission factor from AP-42 (10/96), Table 3.4-1, for Diesel fuel; sulfur content is 0.0015%. EF expressed as pounds SO2 per MMBTU fuel input.

5) Particulate Matter: Emission factor from 40 CFR 89.112, Table 1, for Tier 2 engine >560kW. Expressed in pounds of PM per MMBTU fuel input.

6) PM-10: Assumed all PM equal to PM-10. Expressed in pounds of PM-10 per MMBTU fuel input.

7) PM-2.5: Emission factor from AP-42 (10/96), Table 3.4-2, summed EFs for filterable PM<3 and condensable PM. Expressed in pounds of PM-2.5 per MMBTU fuel input.

8) VOCs: Emission factor from 40 CFR 89.112, Table 1, for Tier 1 engine >560kW, assumed HC is equal to VOC. Expressed in pounds of VOC per MMBTU fuel input.

9) Lead: No emission factor identified for lead emissions from large uncontrolled stationary diesel engines.

Potential To Emit - Non-Carcinogenic TAPs

Non-Carcinogen TAP	#2 Diesel			Max 24hr Ave	Max Annual Ave
	EF	lb/hr	T/yr	lb/hr	lb/hr
Acrolein	7.88E-06	6.62E-05	8.53E-05	3.72E-05	1.95E-05
Naphthalene	1.30E-04	1.09E-03	1.41E-03	6.14E-04	3.21E-04
Toluene	2.81E-04	2.36E-03	3.04E-03	1.33E-03	6.95E-04
Xylenes	1.93E-04	1.62E-03	2.09E-03	9.12E-04	4.77E-04
TOTALS:			6.63E-03		

Potential To Emit - Carcinogen TAPs

Carcinogen TAP	#2 Diesel			Max 24hr Ave	Max Annual Ave
	EF	lb/hr	T/yr	lb/hr	lb/hr
Acenaphthene	4.68E-06	3.93E-05	5.07E-05	2.21E-05	1.16E-05
Acenaphthylene	9.23E-06	7.75E-05	1.00E-04	4.36E-05	2.28E-05
Acetaldehyde	2.52E-05	2.12E-04	2.73E-04	1.19E-04	6.23E-05
Anthracene	1.23E-06	1.03E-05	1.33E-05	5.81E-06	3.04E-06
Benzene	7.76E-04	6.52E-03	8.40E-03	3.67E-03	1.92E-03
Benzo(a)pyrene	2.57E-07	2.16E-06	2.78E-06	1.21E-06	6.35E-07
Benzo(g,h,i)perylene	5.56E-07	4.67E-06	6.02E-06	2.63E-06	1.37E-06
Fluoranthene	4.03E-06	3.39E-05	4.36E-05	1.90E-05	9.96E-06
Fluorene	1.28E-05	1.08E-04	1.39E-04	6.05E-05	3.16E-05
Formaldehyde	7.89E-05	6.63E-04	8.54E-04	3.73E-04	1.95E-04
Naphthalene	1.30E-04	1.09E-03	1.41E-03	6.14E-04	3.21E-04
Phenanthrene	4.08E-05	3.43E-04	4.42E-04	1.93E-04	1.01E-04
POM (see below)	4.49E-06	3.77E-05	4.86E-05	2.12E-05	1.11E-05
Pyrene	3.71E-06	3.12E-05	4.02E-05	1.75E-05	9.17E-06
TOTALS:			1.18E-02		

Polycyclic Organic Matter Mixture

Polycyclic Organic Matter (POM)	#2 Diesel		
	EF	lb/hr	T/yr
Benzo(a)anthracene	6.22E-07	5.22E-06	6.74E-06
Benzo(b)fluoranthene	1.11E-06	9.32E-06	1.20E-05
Benzo(k)fluoranthene	2.18E-07	1.83E-06	2.36E-06
Benzo(a)pyrene	2.57E-07	2.16E-06	2.78E-06
Chrysene	1.52E-06	1.28E-05	1.65E-05
Dibenzo(a,h)anthracene	3.46E-07	2.91E-06	3.75E-06
Indeno(1,2,3-cd)pyrene	4.14E-07	3.48E-06	4.48E-06
TOTALS:	4.49E-06		4.86E-05

Emission Factor Information:

1) TAPs: Emission factor from AP-42 (10/96), Tables 3.4-3 and 3.4-4. Expressed in pounds of pollutant per MMBTU of fuel input.

2) POM: Emission factors for POM based on polyaromatic hydrocarbon mixture identified in IDAPA 58.01.01.586. Refer to Polycyclic Organic Matter Mixture table for calculation methodology.

Greenhouse Gases

GHG	#2 Diesel		
	EF	lb/hr	T/yr
CO2	165.0	1386.00	1786.9
Methane	0.008	0.07	0.09
CO2e		1387.43	1788.74

Emission Factor Information:

1) Carbon Dioxide: Emission factor from AP-42 (10/96), Table 3.4-1. EF expressed in pounds of CO2 per MMBTU of fuel input.

2) Methane: Emission factor from AP-42 (10/96), Table 3.4-1; assumed 9% of TOC to be methane, per footnote f). EF expressed in pounds of methane per MMBTU of fuel input.

3) CO2e: The sum of CO2 and methane expressed as carbon dioxide equivalent. A global warming potential of 21 was applied to methane.

Potential To Emit - HAPs

HAP	#2 Diesel		
	EF	lb/hr	T/yr
Acenaphthene[2]	4.68E-06	3.93E-05	0.0001
Acenaphthylene[2]	9.23E-06	7.75E-05	0.0001
Acetaldehyde	2.52E-05	2.12E-04	0.000
Acrolein	7.88E-06	6.62E-05	0.0001
Anthracene[2]	1.23E-06	1.03E-05	0.00001
Benzene	7.76E-04	6.52E-03	0.01
Benzo(a)anthracene[2]	6.22E-07	5.22E-06	0.00001
Benzo(a)pyrene[2]	2.57E-07	2.16E-06	0.00000
Benzo(b)fluoranthene[2]	1.11E-06	9.32E-06	0.00001
Benzo(g,h,i)perylene[2]	5.56E-07	4.67E-06	0.00001
Benzo(k)fluoranthene[2]	2.18E-07	1.83E-06	0.00000
Chrysene[2]	1.52E-06	1.28E-05	0.00002
Dibenzo(a,h)anthracene[2]	3.46E-07	2.91E-06	0.00000
Fluoranthene[2]	4.03E-06	3.39E-05	0.0000
Fluorene[2]	1.28E-05	1.08E-04	0.0001
Formaldehyde	7.89E-05	6.63E-04	0.001
Indeno(1,2,3-cd)pyrene[2]	4.14E-07	3.48E-06	0.00000
Naphthalene[2]	1.30E-04	1.09E-03	0.001
Phenanthrene[2]	4.08E-05	3.43E-04	0.000
POM (see below)		1.78E-03	0.0023
Pyrene[2]	3.71E-06	3.12E-05	0.0000
Toluene	2.81E-04	2.36E-03	0.00
Xylene	1.93E-04	1.62E-03	0.00
TOTALS:			0.02

Emission Factor Information:

1) HAPs: Emission factors from AP-42 (10/96), Tables 3.4-3 and 3.4-4. Expressed in pounds of pollutant per MMBTU of fuel input.

2) POM: Maximum PTE estimates for POM based on polycyclic organic matter mixture as defined by 1900 CAA Amendments. Compounds included in the mixture are denoted in the table. To avoid double counting, the total, maximum PTE estimates do not include POM (i.e., individual compounds are summed separately).

Emission Unit:	Night Generator
Manufacturer/Model:	Wacker, Model G-50, mfd in 2010 (equipped with John Deere PowerTech 4045D engine, 2007 Model year)
Fuel Type(s):	#2 Diesel
Rated Generator Capacity (kW):	38
Gross Engine Output (bhp):	67
Calculated Fuel Consumption (gal/hr):	3.35
Calculated Capacity (MMBTU/hr):	0.469
Daily Hours of Operation (hr/d)	24
Annual Hours of Operation (hr/yr):	8760

Control Equipment:	Tier 2 Certified Engine

Diesel (MMBTU/1000 gallons):	140	(AP-42 (9/85), App A)
Average BSFC (BTU/hp-hr):	7000	(AP-42 (10/96), Table 3.4-1, footnote e)

Potential To Emit - Criteria Pollutants

Criteria Pollutant	#2 Diesel			Max 24hr Ave	Max Annual Ave
	EF	lb/hr	T/yr	lb/hr	lb/hr
CO	1.17	0.55	2.41	0.55	0.55
CO2e		76.92	336.89	76.92	76.92
NOx	1.76	0.83	3.62	0.83	0.83
SO2	0.29	0.0004	0.002	0.0004	0.0004
PM	0.09	0.04	0.19	0.04	0.04
PM10	0.09	0.04	0.19	0.04	0.04
PM2.5	0.09	0.04	0.19	0.04	0.04
VOC	0.36	0.17	0.74	0.17	0.17
Lead					

Emission Factor Information:

1) Carbon Monoxide: Emission factor from 40 CFR 89.112, Table 1, for Tier 2 engine 37≤KW<75. Expressed in pounds of CO per MMBTU fuel input.

2) Carbon Dioxide Equivalent: Refer to Greenhouse Gases table for calculation methodology.

3) Nitrogen Oxides: Emission factor from 40 CFR 89.112, Table 1, for Tier 2 engine 37≤KW<75. Applied EF for NMHC+NOx, assuming 100% NOx. EF expressed in pounds of NOx per MMBTU fuel input.

4) Sulfur Dioxide: Emission factor from AP-42 (10/96), Table 3.3-1, for Diesel fuel. Per DEQ methodology, it was assumed that the AP-42 EF is based on use a max fuel sulfur content of 0.5%; a ratio has been applied to incorporate the vendor's specification of 0.0015% sulfur (i.e., 0.0015/0.5=0.003). EF expressed as pounds SO2 per MMBTU fuel input.

5) Particulate Matter: Emission factor from 40 CFR 89.112, Table 1, for Tier 2 engine 37<KW<75. Expressed in pounds of PM per MMBTU fuel input.

6) PM-10: Assumed all PM equal to PM-10. Expressed in pounds of PM-10 per MMBTU fuel input.

7) PM-2.5: Assumed all PM equal to PM-2.5. Expressed in pounds of PM-2.5 per MMBTU fuel input.

8) VOCs: Emission factor from AP-42 (10/96), Table 3.3-1. EF for TOC Exhaust and Crankcase assumed equivalent to VOC. Expressed in pounds of VOC per MMBTU fuel input.

9) Lead: No emission factor identified for lead emissions from large uncontrolled stationary diesel engines.

Potential To Emit - Non-Carcinogenic TAPs

Non-Carcinogen TAP	#2 Diesel			Max 24hr Ave	Max Annual Ave
	EF	lb/hr	T/yr	lb/hr	lb/hr
Acrolein	9.25E-05	4.34E-05	1.90E-04	4.34E-05	4.34E-05
Naphthalene	8.48E-05	3.98E-05	1.74E-04	3.98E-05	3.98E-05
Toluene	4.09E-04	1.92E-04	8.40E-04	1.92E-04	1.92E-04
Xylenes	2.85E-04	1.34E-04	5.85E-04	1.34E-04	1.34E-04
TOTALS:			1.79E-03		

Potential To Emit - Carcinogenic TAPs

Carcinogen TAP	#2 Diesel			Max 24hr Ave	Max Annual Ave
	EF	lb/hr	T/yr	lb/hr	lb/hr
Acenaphthene	1.42E-06	6.66E-07	2.92E-06	6.66E-07	6.66E-07
Acenaphthylene	5.06E-06	2.37E-06	1.04E-05	2.37E-06	2.37E-06
Acetaldehyde	7.67E-04	3.60E-04	1.58E-03	3.60E-04	3.60E-04
Anthracene	1.87E-06	8.77E-07	3.84E-06	8.77E-07	8.77E-07
Benzene	9.33E-04	4.38E-04	1.92E-03	4.38E-04	4.38E-04
Benzo(a)pyrene	1.88E-07	8.82E-08	3.86E-07	8.82E-08	8.82E-08
Benzo(g,h,i)perylene	4.89E-07	2.29E-07	1.00E-06	2.29E-07	2.29E-07
1,3-Butadiene	3.91E-05	1.83E-05	8.03E-05	1.83E-05	1.83E-05
Fluoranthene	7.61E-06	3.57E-06	1.56E-05	3.57E-06	3.57E-06
Fluorene	2.92E-05	1.37E-05	6.00E-05	1.37E-05	1.37E-05
Formaldehyde	1.18E-03	5.53E-04	2.42E-03	5.53E-04	5.53E-04
Naphthalene	8.48E-05	3.98E-05	1.74E-04	3.98E-05	3.98E-05
Phenanthrene	2.94E-05	1.38E-05	6.04E-05	1.38E-05	1.38E-05
POM (see below)	3.43E-06	1.61E-06	7.05E-06	1.61E-06	1.61E-06
Pyrene	4.78E-06	2.24E-06	9.82E-06	2.24E-06	2.24E-06
TOTALS:			6.34E-03		

Polycyclic Organic Matter Mixture

Polycyclic Organic Matter (POM)	#2 Diesel		
	EF	lb/hr	T/yr
Benzo(a)anthracene	1.68E-06	7.88E-07	3.45E-06
Benzo(b)fluoranthene	9.91E-08	4.65E-08	2.04E-07
Benzo(k)fluoranthene	1.55E-07	7.27E-08	3.18E-07
Benzo(a)pyrene	1.88E-07	8.82E-08	3.86E-07
Chrysene	3.53E-07	1.66E-07	7.25E-07
Dibenzo(a,h)anthracene	5.83E-07	2.73E-07	1.20E-06
Indeno(1,2,3-cd)pyrene	3.75E-07	1.76E-07	7.70E-07
TOTALS:	3.43E-06		7.05E-06

Emission Factor Information:

1) TAPs: Emission factor from AP-42 (10/96), Tables 3.3-2. Expressed in pounds of pollutant per MMBTU of fuel input.

2) POM: Emission factors for POM based on polyaromatic hydrocarbon mixture identified in IDAPA 58.01.01.586. Refer to Polycyclic Organic Matter Mixture table for calculation methodology.

Greenhouse Gases

GHG	#2 Diesel		
	EF	lb/hr	T/yr
CO2	164.0	76.92	336.9
CO2e		76.92	336.89

1) Carbon Dioxide: Emission factor from AP-42 (10/96), Table 3.3-1. EF expressed in pounds of CO2 per MMBTU of fuel input.

Potential To Emit - HAPs

HAP	#2 Diesel		
	EF	lb/hr	T/yr
Acenaphthene[2]	1.42E-06	6.66E-07	2.92E-06
Acenaphthylene[2]	5.06E-06	2.37E-06	1.04E-05
Acetaldehyde	7.67E-04	3.60E-04	1.58E-03
Acrolein	9.25E-05	4.34E-05	1.90E-04
Anthracene[2]	1.87E-06	8.77E-07	3.84E-06
Benzene	9.33E-04	4.38E-04	1.92E-03
Benzo(a)anthracene[2]	1.68E-06	7.88E-07	3.45E-06
Benzo(a)pyrene[2]	1.88E-07	8.82E-08	3.86E-07
Benzo(b)fluoranthene[2]	9.91E-08	4.65E-08	2.04E-07
Benzo(g,h,i)perylene[2]	4.89E-07	2.29E-07	1.00E-06
Benzo(k)fluoranthene[2]	1.55E-07	7.27E-08	3.18E-07
1,3-Butadiene	3.91E-05	1.83E-05	8.03E-05
Chrysene[2]	3.53E-07	1.66E-07	7.25E-07
Dibenzo(a,h)anthracene[2]	5.83E-07	2.73E-07	1.20E-06
Fluoranthene[2]	7.61E-06	3.57E-06	1.56E-05
Fluorene[2]	2.92E-05	1.37E-05	6.00E-05
Formaldehyde	1.18E-03	5.53E-04	2.42E-03
Indeno(1,2,3-cd)pyrene[2]	3.75E-07	1.76E-07	7.70E-07
Naphthalene[2]	8.48E-05	3.98E-05	1.74E-04
Phenanthrene[2]	2.94E-05	1.38E-05	6.04E-05
POM (see below)		7.88E-05	3.45E-04
Pyrene[2]	4.78E-06	2.24E-06	9.82E-06
Toluene	4.09E-04	1.92E-04	8.40E-04
Xylenes	2.85E-04	1.34E-04	5.85E-04
TOTALS:			0.01

1) HAPs: Emission factor from AP-42 (10/96), Tables 3.3-2. Expressed in pounds of pollutant per MMBTU of fuel input.

2) POM: Maximum PTE estimates for POM based on polycyclic organic matter mixture as defined by 1900 CAA Amendments. Compounds included in the mixture are denoted in the table. To avoid double counting, the total, maximum PTE estimates do not include POM (i.e., individual compounds are summed separately).

Emission Unit:	Storage Tanks		
Tank Number:	Tank 1	Tank 2	Tank 3
Material:	Asphalt	RFO	#2 Diesel
Capacity (gallons):	30,000	15,000	6,000

Production capacity (T/hr):	350
Daily Hours of Operation (hr/d):	12.5
Max Daily Production (T/d):	4,375
Annual Hours of Operation (hr/yr):	2,388
Max Annual Production (T/yr):	835625

Tank 1 Throughput

Liquid asphalt in HMA (%):	4	(typical %, per DEQ methodology and AP-42, 11.1 (3/04))
Density of liquid asphalt (lb/gal):	8.69	(http://www.engineeringtoolbox.com/density-materials-d_1652.html)
Asphalt mass per HMA (lb/T):	9.21	
Annual asphalt throughput (gal/yr):	7692750.288	
TOC emission rate (lb/yr) for 300000 gallon annual throughput:	17.97	(Output from TANKS 4.0.9d (AP-42, 7.1), assuming a throughput of 300,000 gallons of asphalt per year. See computer file for details.)
Scaled annual TOC emission rate (lb/yr):	460.80	

Tank 2 Throughput

RFO heating value (MMBTU/1000 gallons):	140	(AP-42, App A)
Total plant capacity (MMBTU/hr):	135.5	(Drum dryer and asphalt tank heater)
Total plant capacity (gallons/hr):	967.9	
Annual RFO throughput (gal/yr):	2310758.93	
TOC emission rate (lb/yr) for 150000 gallon annual throughput:	0.10	(Output from TANKS 4.0.9d (AP-42, 7.1), assuming a throughput of 150,000 gallons of RFO per year. See computer file for details.)
Scaled annual TOC emission rate (lb/yr):	1.54	

Tank 3 Throughput

Diesel heating value (MMBTU/1000 gallons):	140	(AP-42, App A)
Total plant capacity (MMBTU/hr):	135.5	(Drum dryer and asphalt tank heater)
Total plant capacity (gallons/hr):	967.9	
Annual RFO throughput (gal/yr):	2310758.93	
TOC emission rate (lb/yr) for 60000 gallon annual throughput:	4.45	(Output from TANKS 4.0.9d (AP-42, 7.1), assuming a throughput of 60,000 gallons of RFO per year. See computer file for details.)
Scaled annual TOC emission rate (lb/yr):	171.38	

Potential To Emit - Criteria Pollutants

Criteria Pollutant	Tank 1		Tank 2		Tank 3		Total lb/hr	Total T/yr
	lb/hr	T/yr	lb/hr	T/yr	lb/hr	T/yr		
CO	0.019	0.022					0.02	0.02
CO2e	0.011	0.013					0.01	0.01
NOx							0.00	0.00
SO2							0.00	0.00
PM							0.00	0.00
PM10							0.00	0.00
PM2.5							0.00	0.00
VOC	0.193	0.230	0.0006	0.001	0.072	0.086	0.27	0.32
Lead							0.00	0.00

Emission Factor Information:

1) Carbon Monoxide: Emission factor from AP-42 (3/04), page 11.1-9 (i.e., 0.097). EF expressed as a fraction of TOC emissions. No CO emission factor information located for RFO or diesel; CO emissions expected to be very low from unheated tanks.

2) Carbon Dioxide Equivalent: Refer to Greenhouse Gases table for calculation methodology.

3) Nitrogen Oxides: No emission factor information identified; minimal NOx emissions expected from unheated storage tanks.

4) Sulfur Dioxide: No emission factor information identified; minimal SO2 emissions expected from unheated storage tanks.

5) Particulate Matter: No emission factor information identified; minimal PM emissions expected from unheated storage tanks.

6) PM-10: No emission factor information identified; minimal PM10 emissions expected from unheated storage tanks.

7) PM-2.5: No emission factor information identified; minimal PM2.5 emissions expected from unheated storage tanks.

8) VOCs: For Tank 1, onverted calculated TOC emissions rate to VOC per speciation profile in Table 11.1-16 (100% of TOC = VOC). For Tanks 2 and 3, assume all TOC is VOC.

9) Lead: No emission factor information identified; minimal lead emissions expected from unheated storage tanks.

Potential To Emit - Non-Carcinogenic TAPs

Non-Carcinogen TAP	Tank 1			Max 24hr Ave	Max Annual Ave
	EF	lb/hr	T/yr	lb/hr	lb/hr
Acetone	0.055	1.06E-04	1.27E-04	5.53E-05	2.89E-05
Bromomethane	0.0049	9.46E-06	1.13E-05	4.93E-06	2.58E-06
Carbon Disulfide	0.016	3.09E-05	3.69E-05	1.61E-05	8.42E-06
Chloroethane/Ethyl chloride	0.004	7.72E-06	9.22E-06	4.02E-06	2.10E-06
Chloromethane/Methyl chloride	0.023	4.44E-05	5.30E-05	2.31E-05	1.21E-05
Ethyl Benzene	0.038	7.33E-05	8.76E-05	3.82E-05	2.00E-05
Hexane	0.10	1.93E-04	2.30E-04	1.01E-04	5.26E-05
Methyl Ethyl Ketone	0.039	7.53E-05	8.99E-05	3.92E-05	2.05E-05
Styrene	0.0054	1.04E-05	1.24E-05	5.43E-06	2.84E-06
Toluene	0.062	1.20E-04	1.43E-04	6.23E-05	3.26E-05
Xylenes	0.257	4.96E-04	5.92E-04	2.58E-04	1.35E-04
TOTALS:			0.0014		

Potential To Emit - Carcinogenic TAPs

Carcinogen TAP	Tank 1			Max 24hr Ave	Max Annual Ave
	EF	lb/hr	T/yr	lb/hr	lb/hr
Benzene	0.032	6.18E-05	7.37E-05	3.22E-05	1.68E-05
Chloromethane/Methyl chloride	0.023	4.44E-05	5.30E-05	2.31E-05	1.21E-05
Formaldehyde	0.69	1.33E-03	1.59E-03	6.94E-04	3.63E-04
Methylene Chloride/Dichloromethane	0.00027	5.21E-07	6.22E-07	2.71E-07	1.42E-07
TOTALS:			0.0017		

Emission Factor Information:

1) TAPs: Based on speciation factors from AP-42 (3/04), Tables 11.1-16. Speciation factors are converted from percentages and multiplied by the scaled TOC emission rates from TANKS to derive the emissions rates in the PTE tables above. All EFs expressed as percentages TOC emission rates. No speciation factors located for RFO and/or diesel fuel; TAP emissions expected to be very low from unheated tanks.

Greenhouse Gases

GHG	Tank 1		
	EF	lb/hr	T/yr
Methane	0.26	0.0005	0.0006
CO2e		0.011	0.013

1) Methane: Based on speciation factor from AP-42 (3/04), Table 11.1-16. Speciation factor is converted from a percentage and then multiplied by the scaled TOC emission rates from TANKS to derive the emissions rates in the PTE tables above. All EFs expressed as percentages TOC emission rates. No speciation factors located for RFO and/or diesel fuel; GHG emissions expected to be very low from unheated tanks.

2) CO2e: A global warming potential of 21 was applied to methane to derive carbon dioxide equivalent estimates.

Potential To Emit - HAPs

HAP	Tank 1		
	EF	lb/hr	T/yr
Benzene	0.032	6.18E-05	7.37E-05
Bromomethane	0.0049	9.46E-06	1.13E-05
Carbon Disulfide	0.016	3.09E-05	3.69E-05
Chloroethane/Ethyl Chloride	0.004	7.72E-06	9.22E-06
Chloromethane/Methyl chloride	0.023	4.44E-05	5.30E-05
Ethyl Benzene	0.038	7.33E-05	8.76E-05
Formaldehyde	0.69	1.33E-03	1.59E-03
Hexane	0.10	1.93E-04	2.30E-04
Methyl Ethyl Ketone	0.039	7.53E-05	8.99E-05
Methylene Chloride/Dichloromethane	0.00027	5.21E-07	6.22E-07
Styrene	0.0054	1.04E-05	1.24E-05
Toluene	0.062	1.20E-04	1.43E-04
Xylene	0.257	4.96E-04	5.92E-04
TOTALS:			0.00

1) HAPs: Based on speciation factors from AP-42 (3/04), Tables 11.1-16. Speciation factors are converted from percentages and multiplied by the scaled TOC emission rates from TANKS to derive the emissions rates in the PTE tables above. All EFs expressed as percentages TOC emission rates. No speciation factors located for RFO and/or diesel fuel; HAP emissions expected to be very low from unheated tanks.

Emission Unit:	Silo Filling
Production capacity (T/hr):	350
Daily Hours of Operation (hr/d):	12.5
Max Daily Production (T/d):	4375
Annual Hours of Operation (hr/yr):	2387.5
Max Annual Production (T/yr):	835625

Potential To Emit - Criteria Pollutants

Criteria Pollutant	Silo Filling			Max 24hr Ave	Max Annual Ave
	EF	lb/hr	T/yr	lb/hr	lb/hr
CO	1.18E-03	0.41	0.49	0.22	0.11
CO2e		0.23	0.28	0.12	0.06
NOx					
SO2					
PM	5.86E-04	0.21	0.24	0.11	0.06
PM10	5.86E-04	0.21	0.24	0.11	0.06
PM2.5	5.86E-04	0.21	0.24	0.11	0.06
VOC	1.22E-02	4.27	5.10	2.22	1.16
Lead					

Emission Factor Information:

1) Carbon Monoxide: Emission factor from AP-42 (3/04), Table 11.1-14, for Silo filling. Default values of -0.5 and 325°F were used for asphalt volatility (V) and HMA mix temperature (T). Expressed in pounds of CO per ton of HMA produced.

2) Carbon Dioxide Equivalent: Refer to Greenhouse Gases table for calculation methodology.

3) Nitrogen Oxides: No emission factor identified for NOx emissions from silo filling operations.

4) Sulfur Dioxide: No emission factor identified for SO2 emissions from silo filling operations.

5) Particulate Matter: Emission factor from AP-42 (3/04), Table 11.1-14, for Silo filling, Total PM. Default values of -0.5 and 325°F were used for asphalt volatility (V) and HMA mix temperature (T). Expressed in pounds of PM per ton of HMA produced.

6) PM-10: Emission factor from AP-42 (3/04), Table 11.1-14, for Silo filling, Total PM. Default values of -0.5 and 325°F were used for asphalt volatility (V) and HMA mix temperature (T). Per footnote b), all PM assumed to be PM10. Expressed in pounds of PM10 per ton of HMA produced.

7) PM-2.5: Emission factor from AP-42 (3/04), Table 11.1-14, for Silo filling, Total PM. Default values of -0.5 and 325°F were used for asphalt volatility (V) and HMA mix temperature (T). Per footnote b), all PM assumed to be PM2.5. Expressed in pounds of PM2.5 per ton of HMA produced.

8) VOCs: Emission factor from AP-42 (3/04), Table 11.1-14, for Silo filling, TOC. Default values of -0.5 and 325°F were used for asphalt volatility (V) and HMA mix temperature (T). Converted from TOC to VOC per speciation profile in Table 11.1-16 (100% of TOC = VOC). EF expressed in pounds of VOC per ton of HMA produced.

9) Lead: No emission factor identified for lead emissions from silo filling operations.

Emission Factor Estimates and PTE for Organic PM and TOC

Pollutant	EF (lbs/T HMA)	PTE	
		lb/hr	T/yr
Organic PM	2.54E-04	8.89E-02	1.06E-01
TOC	1.22E-02	4.27E+00	5.10E+00

Potential To Emit - Non-Carcinogenic TAPs

Non-Carcinogen TAP	Silo Filling			Max 24hr Ave	Max Annual Ave
	EF	lb/hr	T/yr	lb/hr	lb/hr
Acetone	0.055	2.35E-03	2.80E-03	1.22E-03	6.40E-04
Bromomethane/Methyl bromide	0.0049	2.09E-04	2.50E-04	1.09E-04	5.70E-05
Carbon Disulfide	0.016	6.83E-04	8.16E-04	3.56E-04	1.86E-04
Chloroethane/Ethyl chloride	0.004	1.71E-04	2.04E-04	8.90E-05	4.66E-05
Chloromethane/Methyl chloride	0.023	9.82E-04	1.17E-03	5.12E-04	2.68E-04
Ethyl Benzene	0.038	1.62E-03	1.94E-03	8.45E-04	4.42E-04
Hexane	0.10	4.27E-03	5.10E-03	2.22E-03	1.16E-03
Methyl Ethyl Ketone	0.039	1.67E-03	1.99E-03	8.67E-04	4.54E-04
Naphthalene	1.82	1.62E-03	1.93E-03	8.43E-04	4.41E-04
Phenol	0.0	0.00E+00	0.00E+00	0.00E+00	0.00E+00
Styrene	0.0054	2.31E-04	2.75E-04	1.20E-04	6.28E-05
Toluene	0.062	2.65E-03	3.16E-03	1.38E-03	7.22E-04
Xylenes (o-, m-, p-isomers)	0.257	1.10E-02	1.31E-02	5.72E-03	2.99E-03
TOTALS:			3.27E-02		

Potential To Emit - Carcinogenic TAPs

Carcinogen TAP	Silo Filling			Max 24hr Ave	Max Annual Ave
	EF	lb/hr	T/yr	lb/hr	lb/hr
Acenaphthene	0.47	4.18E-04	4.99E-04	2.18E-04	1.14E-04
Acenaphthylene	0.014	1.24E-05	1.49E-05	6.48E-06	3.39E-06
Anthracene	0.13	1.16E-04	1.38E-04	6.02E-05	3.15E-05
Benzene	0.032	1.37E-03	1.63E-03	7.12E-04	3.72E-04
Benzo(a)pyrene	0.0	0.00E+00	0.00E+00	0.00E+00	0.00E+00
Benzo(g,h,i)perylene	0.0	0.00E+00	0.00E+00	0.00E+00	0.00E+00
Benzo(e)pyrene	0.0095	8.45E-06	1.01E-05	4.40E-06	2.30E-06
Chloromethane/Methyl chloride	0.023	9.82E-04	1.17E-03	5.12E-04	2.68E-04
Fluoranthene	0.15	1.33E-04	1.59E-04	6.95E-05	3.63E-05
Fluorene	1.01	8.98E-04	1.07E-03	4.68E-04	2.45E-04
Formaldehyde	0.69	2.95E-02	3.52E-02	1.53E-02	8.03E-03
Methylene Chloride/Dichloromethane	0.00027	1.15E-05	1.38E-05	6.00E-06	3.14E-06
2-Methylnaphthalene	5.27	4.69E-03	5.59E-03	2.44E-03	1.28E-03
Naphthalene	1.82	1.62E-03	1.93E-03	8.43E-04	4.41E-04
Perylene	0.030	2.67E-05	3.18E-05	1.39E-05	7.27E-06
Phenanthrene	1.80	1.60E-03	1.91E-03	8.33E-04	4.36E-04
POM (see below)	2.66E-01	2.36E-04	2.82E-04	1.23E-04	6.44E-05
Pyrene	0.44	3.91E-04	4.67E-04	2.04E-04	1.07E-04
TOTALS:			5.01E-02		

Polycyclic Organic Matter Mixture

Polycyclic Organic Matter (POM)	Silo Filling		
	EF	lb/hr	T/yr
Benzo(a)anthracene	0.056	4.98E-05	5.94E-05
Benzo(b)fluoranthene	0.0	0.00E+00	0.00E+00
Benzo(k)fluoranthene	0.0	0.00E+00	0.00E+00
Benzo(a)pyrene	0.0	0.00E+00	0.00E+00
Chrysene	0.21	1.87E-04	2.23E-04
Dibenzo(a,h)anthracene	0.0	0.00E+00	0.00E+00
Indeno(1,2,3-cd)pyrene	0.0	0.00E+00	0.00E+00
TOTALS:	2.66E-01		2.82E-04

Emission Factor Information:

1) Organic PM and TOC Emission Factors: Emission factor from AP-42 (3/04), Table 11.1-14, for Silo filling. Default values of -0.5 and 325°F were used for asphalt volatility (V) and HMA mix temperature (T). Expressed in pounds of pollutant per ton of HMA produced. PTE based on max hourly and annual HMA production rates.

2) TAPs: Based on speciation factors from AP-42 (3/04), Tables 11.1-15 and 11.1-16. Speciation factors are converted from percentages and multiplied by theappropriate emission rate for Organic PM or TOC to derive the emissions rates in the PTE tables above. All EFs expressed as percentages of Organic PM or TOC emission rates.

3) POM: Emission factors for POM based on polyaromatic hydrocarbon mixture identified in IDAPA 58.01.01.586. Refer to Polycyclic Organic Matter Mixture table for calculation methodology.

Greenhouse Gases

GHG	Silo Filling		
	EF	lb/hr	T/yr
Methane	0.26	0.01	0.01
CO2e		0.23	0.28

1) Methane: Based on speciation factors from AP-42 (3/04), Table 11.1-16. Speciation factor is converted from a percentage and then multiplied by the TOC emission factor to derive the EF in the table. EF expressed in pounds of methane per ton of HMA.

2) CO2e: A global warming potential of 21 was applied to methane to derive carbon dioxide equivalent estimates.

Potential To Emit - HAPs

HAP	Silo Filling		
	EF	lb/hr	T/yr
Acenaphthene[2]	0.47	4.18E-04	0.0005
Acenaphthylene[2]	0.014	1.24E-05	0.0000
Anthracene[2]	0.13	1.16E-04	0.0001
Benzene	0.032	1.37E-03	0.0016
Benzo(a)anthracene[2]	0.056	4.98E-05	0.0001
Benzo(a)pyrene[2]	0.0	0.00E+00	0.0000
Benzo(b)fluoranthene[2]	0.0	0.00E+00	0.0000
Benzo(e)pyrene[2]	0.0095	8.45E-06	0.0000
Benzo(g,h,i)perylene[2]	0.0	0.00E+00	0.0000
Benzo(k)fluoranthene[2]	0.0	0.00E+00	0.0000
Bromomethane	0.0049	2.09E-04	0.0002
Carbon Disulfide	0.016	6.83E-04	0.0008
Chloroethane/Ethyl Chloride	0.004	1.71E-04	0.0002
Chloromethane/Methyl chloride	0.023	9.82E-04	0.0012
Chrysene[2]	0.21	1.87E-04	0.0002
Dibenzo(a,h)anthracene[2]	0.0	0.00E+00	0.0000
Ethyl Benzene	0.038	1.62E-03	0.0019
Fluoranthene[2]	0.15	1.33E-04	0.0002
Fluorene[2]	1.01	8.98E-04	0.0011
Formaldehyde	0.69	2.95E-02	0.0352
Hexane	0.10	4.27E-03	5.10E-03
Indeno(1,2,3-cd)pyrene[2]	0.0	0.00E+00	0.0000
Methyl Ethyl Ketone	3.90E-02	1.67E-03	0.0020
MTBE	0.0	0.00E+00	0.0000
Methylene Chloride	0.00027	1.15E-05	0.0000
2-Methylnaphthalene[2]	5.27	4.69E-03	0.0056
Naphthalene[2]	1.82	1.62E-03	0.0019
Perylene[2]	0.030	2.67E-05	0.0000
Phenanthrene[2]	1.80	1.60E-03	0.0019
Phenol	0.0	0.00E+00	0.0000
POM (see below)		1.01E-02	0.0121
Pyrene[2]	0.44	3.91E-04	0.0005
Styrene	0.0054	2.31E-04	0.0003
Toluene	0.062	2.65E-03	0.0032
Xylene	0.257	1.10E-02	0.0131
TOTALS:			0.08

1) HAPs: Based on speciation factors from AP-42 (3/04), Tables 11.1-15 and 11.1-16. Speciation factors are multiplied by the appropriate emission rate for Organic PM or TOC to derive the emissions rates in the PTE tables above. All EFs expressed as percentages of Organic PM or TOC emission rates.

2) POM: Maximum PTE estimates for POM based on polycyclic organic matter mixture as defined by 1900 CAA Amendments. Compounds included in the mixture are denoted in the table. To avoid double counting, the total, maximum PTE estimates do not include POM (i.e., individual compounds are summed separately).

Emission Unit:	Silo Loadout
Production capacity (T/hr):	350
Daily Hours of Operation (hr/d):	12.5
Max Daily Production (T/d):	4375
Annual Hours of Operation (hr/yr):	2387.5
Max Annual Production (T/yr):	835625

Potential To Emit - Criteria Pollutants

Criteria Pollutant	Silo Loadout			Max 24hr Ave	Max Annual Ave
	EF	lb/hr	T/yr	lb/hr	lb/hr
CO	1.35E-03	0.47	0.56	0.25	0.13
CO2e		1.99	2.37	1.04	0.54
NOx					
SO2					
PM	5.22E-04	0.18	0.22	0.10	0.05
PM10	5.22E-04	0.18	0.22	0.10	0.05
PM2.5	5.22E-04	0.18	0.22	0.10	0.05
VOC	3.91E-03	1.37	1.63	0.71	0.37
Lead					

Emission Factor Information:

1) Carbon Monoxide: Emission factor from AP-42 (3/04), Table 11.1-14, for Loadout. Default values of -0.5 and 325°F were used for asphalt volatility (V) and HMA mix temperature (T). Expressed in pounds of CO per ton of HMA produced.

2) Carbon Dioxide Equivalent: Refer to Greenhouse Gases table for calculation methodology.

3) Nitrogen Oxides: No emission factor identified for NOx emissions from silo filling operations.

4) Sulfur Dioxide: No emission factor identified for SO2 emissions from silo filling operations.

5) Particulate Matter: Emission factor from AP-42 (3/04), Table 11.1-14, for Loadout, Total PM. Default values of -0.5 and 325°F were used for asphalt volatility (V) and HMA mix temperature (T). Expressed in pounds of PM per ton of HMA produced.

6) PM-10: Emission factor from AP-42 (3/04), Table 11.1-14, for Loadout, Total PM. Default values of -0.5 and 325°F were used for asphalt volatility (V) and HMA mix temperature (T). Per footnote b), all PM assumed to be PM10. Expressed in pounds of PM10 per ton of HMA produced.

7) PM-2.5: Emission factor from AP-42 (3/04), Table 11.1-14, for Loadout, Total PM. Default values of -0.5 and 325°F were used for asphalt volatility (V) and HMA mix temperature (T). Per footnote b), all PM assumed to be PM2.5. Expressed in pounds of PM2.5 per ton of HMA produced.

8) VOCs: Emission factor from AP-42 (3/04), Table 11.1-14, for Loadout, TOC. Default values of -0.5 and 325°F were used for asphalt volatility (V) and HMA mix temperature (T). Converted from TOC to VOC per speciation profile in Table 11.1-16 (94% of TOC = VOC). EF expressed in pounds of VOC per ton of HMA produced.

9) Lead: No emission factor identified for lead emissions from silo filling operations.

Emission Factor Estimates and PTE for Organic PM and TOC

Pollutant	EF (lbs/T HMA)	PTE	
		lb/hr	T/yr
Organic PM	3.41E-04	1.19E-01	1.42E-01
TOC	4.16E-03	1.46E+00	1.74E+00

Potential To Emit - Non-Carcinogenic TAPs

Non-Carcinogen TAP	Silo Loadout			Max 24hr Ave	Max Annual Ave
	EF	lb/hr	T/yr	lb/hr	lb/hr
Acetone	0.046	6.70E-04	8.00E-04	3.49E-04	1.83E-04
Bromomethane/Methyl bromide	0.0096	1.40E-04	1.67E-04	7.28E-05	3.81E-05
Carbon Disulfide	0.013	1.89E-04	2.26E-04	9.86E-05	5.16E-05
Chloroethane/Ethyl Chloride	0.00021	3.06E-06	3.65E-06	1.59E-06	8.33E-07
Chloromethane/Methyl chloride	0.015	2.18E-04	2.61E-04	1.14E-04	5.95E-05
Cumene	0.11	1.60E-03	1.91E-03	8.34E-04	4.37E-04
Ethyl Benzene	0.28	4.08E-03	4.87E-03	2.12E-03	1.11E-03
Hexane	0.15	2.18E-03	2.61E-03	1.14E-03	5.95E-04
Methyl Ethyl Ketone	0.049	7.13E-04	8.52E-04	3.72E-04	1.94E-04
Naphthalene	1.25	1.49E-03	1.78E-03	7.77E-04	4.07E-04
Phenol	1.18	1.41E-03	1.68E-03	7.34E-04	3.84E-04
Styrene	0.0073	1.06E-04	1.27E-04	5.54E-05	2.90E-05
Toluene	0.21	3.06E-03	3.65E-03	1.59E-03	8.33E-04
1,1,1-Trichloroethane/Methyl Chlorofor	0.00	0.00E+00	0.00E+00	0.00E+00	0.00E+00
Xylenes (o-, m-, p-isomers)	0.49	7.13E-03	8.52E-03	3.72E-03	1.94E-03
TOTALS:			2.74E-02		

Potential To Emit - Carcinogenic TAPs

Carcinogen TAP	Silo Loadout			Max 24hr Ave	Max Annual Ave
	EF	lb/hr	T/yr	lb/hr	lb/hr
Acenaphthene	0.26	3.10E-04	3.70E-04	1.62E-04	8.46E-05
Acenaphthylene	0.028	3.34E-05	3.99E-05	1.74E-05	9.11E-06
Anthracene	0.070	8.35E-05	9.97E-05	4.35E-05	2.28E-05
Benzene	0.052	7.57E-04	9.04E-04	3.94E-04	2.06E-04
Benzo(a)pyrene	0.0023	2.75E-06	3.28E-06	1.43E-06	7.48E-07
Benzo(g,h,i)perylene	0.0019	2.27E-06	2.71E-06	1.18E-06	6.18E-07
Benzo(e)pyrene	0.0078	9.31E-06	1.11E-05	4.85E-06	2.54E-06
Chloromethane/Methyl chloride	0.015	2.18E-04	2.61E-04	1.14E-04	5.95E-05
Fluoranthene	0.050	5.97E-05	7.12E-05	3.11E-05	1.63E-05
Fluorene	0.77	9.19E-04	1.10E-03	4.79E-04	2.50E-04
Formaldehyde	0.088	1.28E-03	1.53E-03	6.67E-04	3.49E-04
Methylene Chloride/Dichloromethane	0.0	0.00E+00	0.00E+00	0.00E+00	0.00E+00
2-Methylnaphthalene	2.38	2.84E-03	3.39E-03	1.48E-03	7.74E-04
Naphthalene	1.25	1.49E-03	1.78E-03	7.77E-04	4.07E-04
Perylene	0.022	2.63E-05	3.13E-05	1.37E-05	7.16E-06
Phenanthrene	0.81	9.67E-04	1.15E-03	5.04E-04	2.63E-04
POM (see below)	1.35E-01	1.61E-04	1.92E-04	8.39E-05	4.39E-05
Pyrene	0.15	1.79E-04	2.14E-04	9.32E-05	4.88E-05
Tetrachloroethene/Tetrachloroethylene	0.0077	1.12E-04	1.34E-04	5.84E-05	3.06E-05
Trichloroethene/Trichloroethylene	0.0	0.00E+00	0.00E+00	0.00E+00	0.00E+00
TOTALS:			1.13E-02		

Polycyclic Organic Matter Mixture

Polycyclic Organic Matter (POM)	Silo Loadout		
	EF	lb/hr	T/yr
Benzo(a)anthracene	0.019	2.27E-05	2.71E-05
Benzo(b)fluoranthene	0.0076	9.07E-06	1.08E-05
Benzo(k)fluoranthene	0.0022	2.63E-06	3.13E-06
Benzo(a)pyrene	0.0023	2.75E-06	3.28E-06
Chrysene	0.103	1.23E-04	1.47E-04
Dibenzo(a,h)anthracene	0.00037	4.42E-07	5.27E-07
Indeno(1,2,3-cd)pyrene	0.00047	5.61E-07	6.70E-07
TOTALS:	1.35E-01		1.92E-04

Emission Factor Information:

1) Organic PM and TOC Emission Factors: Emission factor from AP-42 (3/04), Table 11.1-14, for Loadout. Default values of -0.5 and 325°F were used for asphalt volatility (V) and HMA mix temperature (T). Expressed in pounds of pollutant per ton of HMA produced. PTE based on max hourly and annual HMA production rates.

2) TAPs: Based on speciation factors from AP-42 (3/04), Tables 11.1-15 and 11.1-16. Speciation factors are converted from percentages and multiplied by theappropriate emission rate for Organic PM or TOC to derive the emissions rates in the PTE tables above. All EFs expressed as percentages of Organic PM or TOC emission rates.

3) POM: Emission factors for POM based on polyaromatic hydrocarbon mixture identified in IDAPA 58.01.01.586. Refer to Polycyclic Organic Matter Mixture table for calculation methodology.

Greenhouse Gases

GHG	Silo Loadout		
	EF	lb/hr	T/yr
Methane	6.50	0.09	0.11
CO2e		1.99	2.37

1) Methane: Based on speciation factors from AP-42 (3/04), Table 11.1-16. Speciation factor is converted from a percentage and then multiplied by the TOC emission factor to derive the EF in the table. EF expressed in pounds of methane per ton of HMA.

2) CO2e: A global warming potential of 21 was applied to methane to derive carbon dioxide equivalent estimates.

Potential To Emit - HAPs

HAP	Silo Loadout		
	EF	lb/hr	T/yr
Acenaphthene[2]	0.26	3.10E-04	0.0004
Acenaphthylene[2]	0.028	3.34E-05	0.0000
Anthracene[2]	0.070	8.35E-05	0.0001
Benzene	0.052	7.57E-04	0.0009
Benzo(a)anthracene[2]	0.019	2.27E-05	0.0000
Benzo(a)pyrene[2]	0.0023	2.75E-06	0.0000
Benzo(b)fluoranthene[2]	0.0076	9.07E-06	0.0000
Benzo(e)pyrene[2]	0.0078	9.31E-06	0.0000
Benzo(g,h,i)perylene[2]	0.0019	2.27E-06	0.0000
Benzo(k)fluoranthene[2]	0.0022	2.63E-06	0.0000
Bromomethane	0.0096	1.40E-04	0.0002
Carbon Disulfide	0.013	1.89E-04	0.0002
Chloroethane/Ethyl Chloride	0.00021	3.06E-06	0.0000
Chloromethane/Methyl chloride	0.015	2.18E-04	0.0003
Chrysene[2]	0.103	1.23E-04	0.0001
Cumene	0.11	1.60E-03	0.0019
Dibenzo(a,h)anthracene[2]	0.00037	4.42E-07	0.0000
Ethyl Benzene	0.28	4.08E-03	0.0049
Fluoranthene[2]	0.050	5.97E-05	0.0001
Fluorene[2]	0.77	9.19E-04	0.0011
Formaldehyde	0.088	1.28E-03	0.0015
Hexane	0.15	2.18E-03	0.0026
Indeno(1,2,3-cd)pyrene[2]	0.00047	5.61E-07	0.0000
Methyl Chloroform	0.00	0.00E+00	0.0000
Methyl Ethyl Ketone	0.049	7.13E-04	0.0009
MTBE	0.0	0.00E+00	0.0000
Methylene Chloride	0.0	0.00E+00	0.0000
2-Methylnaphthalene[2]	2.38	2.84E-03	0.0034
Naphthalene[2]	1.25	1.49E-03	0.0018
Perylene[2]	0.022	2.63E-05	0.0000
Phenanthrene[2]	0.81	9.67E-04	0.0012
Phenol	1.18	1.41E-03	0.0017
POM (see below)		7.08E-03	0.0085
Pyrene[2]	0.15	1.79E-04	0.0002
Styrene	0.0073	1.06E-04	0.0001
Tetrachloroethene/Tetrachloroethylene	0.0077	1.12E-04	0.0001
Toluene	0.21	3.06E-03	0.0037
Trichloroethene/Trichloroethylene	0.0	0.00E+00	0.0000
Xylene	0.49	7.13E-03	0.0085
TOTALS:			0.04

1) HAPs: Based on speciation factors from AP-42 (3/04), Tables 11.1-15 and 11.1-16. Speciation factors are converted from percentages and multiplied by theappropriate emission rate for Organic PM or TOC to derive the emissions rates in the PTE tables above. All EFs expressed as percentages of Organic PM or TOC emission rates.

2) POM: Maximum PTE estimates for POM based on polycyclic organic matter mixture as defined by 1900 CAA Amendments. Compounds included in the mixture are denoted in the table. To avoid double counting, the total, maximum PTE estimates do not include POM (i.e., individual compounds are summed separately).

Emission Unit:	Aggregate Handling and Screening
Aggregrate in HMA (%):	96 (Typical %, per DEQ methodology and AP-42, 11.1 (3/04))
Production Capacity (T/hr):	336
Daily Hours of Operation (hr/d):	12.5
Max Daily Production (T/d):	4200
Annual Hours of Operation (hr/yr):	2387.5
Max Annual Production (T/yr):	802200

1. AGGREGATE DROPS FROM FRONT END LOADER

Total tansfer points:	1	From drop to cold bins (stockpile will already be onsite during HMA operations).

Potential To Emit - Criteria Pollutants

Criteria Pollutant	EF	lb/hr	T/yr	Max 24hr Ave lb/hr	Max Annual Ave lb/hr
PM	0.003305	1.11	1.33	0.58	0.30
PM10	0.000765	0.26	0.31	0.13	0.07
PM2.5	0.000116	0.04	0.05	0.02	0.01

Emission Factor Information:

1) Particulate Matter: Emission factor from AP-42, 13.2.4 (11/06), Equation 1: $EF = k (0.0032) \times (U/5)^{1.3} / (M/2)^{1.4}$.
Where: k (particle size multiplier) = 0.74 for PM, U (mean wind speed) = 10 mph, and M (moisture content) = 5%. Per DEQ methodology, 10 mph assumed to be base case for mean wind speed. Moisture typically ranges from 3-7% (STAPPA-ALAPCO-EPA, Emission Inventory Improvement Program, Volume II, Chapter 3, Preferred and Alternative Methods for Estimating Air from Hot Mix Asphalt Plants, Final Report, July 1996); 5% is typical for Western Construction HMA plants, per owner. EF expressed in pounds of PM per ton of aggregate.

2) PM-10: Emission factor from AP-42, 13.2.4 (11/06), Equation 1: $EF = k (0.0032) \times (U/5)^{1.3} / (M/2)^{1.4}$.
Where: k (particle size multiplier) = 0.35 for PM, U (mean wind speed) = 10 mph, and M (moisture content) = 5%. Per DEQ methodology, 10 mph assumed to be base case for mean wind speed. Moisture typically ranges from 3-7% (STAPPA-ALAPCO-EPA, Emission Inventory Improvement Program, Volume II, Chapter 3, Preferred and Alternative Methods for Estimating Air from Hot Mix Asphalt Plants, Final Report, July 1996); 5% is typical for Western Construction HMA plants, per owner. EF expressed in pounds of PM10 per ton of aggregate.

3) PM-2.5: Emission factor from AP-42, 13.2.4 (11/06), Equation 1: $EF = k (0.0032) \times (U/5)^{1.3} / (M/2)^{1.4}$.
Where: k (particle size multiplier) = 0.053 for PM, U (mean wind speed) = 10 mph, and M (moisture content) = 5%. Per DEQ methodology, 10 mph assumed to be base case for mean wind speed. Moisture typically ranges from 3-7% (STAPPA-ALAPCO-EPA, Emission Inventory Improvement Program, Volume II, Chapter 3, Preferred and Alternative Methods for Estimating Air from Hot Mix Asphalt Plants, Final Report, July 1996); 5% is typical for Western Construction HMA plants, per owner. EF expressed in pounds of PM2.5 per ton of aggregate.

4) Other Pollutants: No emissions other than particulate matter are associated with aggregate handling.

2. AGGREGATE DROPS FROM CONVEYERS

Total tansfer points:	4	[1) bins to conveyor, 2) conveyor to screen, 3) screen to conveyor, and 4) conveyor to drum]

Potential To Emit - Criteria Pollutants

Criteria Pollutant	EF	lb/hr	T/yr	Max 24hr Ave lb/hr	Max Annual Ave lb/hr
PM	0.00014	0.19	0.22	0.10	0.05
PM10	0.000046	0.06	0.07	0.03	0.02
PM2.5	0.000013	0.02	0.02	0.01	0.00

Emission Factor Information:

1) Particulate Matter: Emission factor from AP-42 (8/04), Table 11.19.2-2, for Total PM, Conveyor Transfer Point (controlled). Controls for emissions are assumed to be in place, per the requirements of IDAPA 58.01.01.808.01. EF expressed in pounds of PM per ton of aggregate.

2) PM-10: Emission factor from AP-42 (8/04), Table 11.19.2-2, for Total PM-10, Conveyor Transfer Point (controlled). Controls for emissions are assumed to be in place, per the requirements of IDAPA 58.01.01.808.01. EF expressed in pounds of PM-10 per ton of aggregate.

3) PM-2.5: Emission factor from AP-42 (8/04), Table 11.19.2-2, for Total PM-2.5, Conveyor Transfer Point (controlled). Controls for emissions are assumed to be in place, per the requirements of IDAPA 58.01.01.808.01. EF expressed in pounds of PM-2.5 per ton of aggregate.

3. AGGREGATE SCREENING

Screens:	1

Potential To Emit - Criteria Pollutants

Criteria Pollutant	EF	lb/hr	T/yr	Max 24hr Ave lb/hr	Max Annual Ave lb/hr
PM	0.0022	0.74	0.88	0.39	0.20
PM10	0.00074	0.25	0.30	0.13	0.07
PM2.5	0.000050	0.02	0.02	0.01	0.00

Emission Factor Information:

1) Particulate Matter: Emission factor from AP-42 (8/04), Table 11.19.2-2, for Total PM, Screening (controlled). Controls for emissions are assumed to be in place, per the requirements of IDAPA 58.01.01.808.01. EF expressed in pounds of PM per ton of aggregate.

2) PM-10: Emission factor from AP-42 (8/04), Table 11.19.2-2, for Total PM-10, Screening (controlled). Controls for emissions are assumed to be in place, per the requirements of IDAPA 58.01.01.808.01. EF expressed in pounds of PM-10 per ton of aggregate.

3) PM-2.5: Emission factor from AP-42 (8/04), Table 11.19.2-2, for Total PM-2.5, Screening (controlled). Controls for emissions are assumed to be in place, per the requirements of IDAPA 58.01.01.808.01. EF expressed in pounds of PM-2.5 per ton of aggregate.

Potential To Emit - Criteria Pollutants

Criteria Pollutant	HMA Drum Dryer		Asphalt Heater		Operations Generator		Night Generator		Storage Tanks		Silo Filling		Loadout		TOTAL	
	lb/hr	T/yr	lb/hr	T/yr	lb/hr	T/yr	lb/hr	T/yr	lb/hr	T/yr	lb/hr	T/yr	lb/hr	T/yr	lb/hr	T/yr
CO	45.91	54.81	0.04	0.18	6.90	8.90	0.55	2.41	0.02	0.02	0.00	0.00	0.47	0.56	53.90	66.89
CO2e	11962.12	14384.77	100.30	439.33	1387.43	1788.74	76.92	336.89	0.01	0.01	0.00	0.00	1.99	2.37	13528.77	16952.13
NOx	19.25	22.98	0.07	0.31	12.60	16.24	0.83	3.62	0.00	0.00	0.00	0.00	0.00	0.00	32.75	43.16
SO2	20.30	24.23	0.19	0.84	0.01	0.02	0.00	0.00	0.00	0.00	0.00	0.00	0.00	0.00	20.50	25.09
PM	11.76	14.03	0.20	0.88	0.39	0.51	0.04	0.19	0.00	0.00	0.00	0.00	0.18	0.22	12.58	15.83
PM10	8.26	9.85	0.17	0.76	0.39	0.51	0.04	0.19	0.00	0.00	0.00	0.00	0.18	0.22	9.05	11.53
PM2.5	4.05	4.84	0.01	0.03	0.47	0.60	0.04	0.19	0.00	0.00	0.00	0.00	0.18	0.22	4.75	5.88
VOC	15.47	18.47	0.01	0.02	2.56	3.30	0.17	0.74	0.27	0.32	0.00	0.00	1.37	1.63	19.84	24.48
Lead	0.01	0.01	0.00	0.01	0.00	0.00	0.00	0.00	0.00	0.00	0.00	0.00	0.00	0.00	0.01	0.01

Potential To Emit - Non-carcinogen Toxic Air Pollutants

Non-carcinogen TAP	HMA Drum Dryer		Asphalt Heater		Operations Generator		Night Generator		Asphalt Storage Tank		Silo Filling		Loadout		TOTAL	
	lb/hr	T/yr	lb/hr	T/yr	lb/hr	T/yr	lb/hr	T/yr	lb/hr	T/yr	lb/hr	T/yr	lb/hr	T/yr	lb/hr	T/yr
Acetone	2.93E-01	3.50E-01							1.06E-04	1.27E-04	0.00E+00	0.00E+00	6.70E-04	8.00E-04	2.94E-01	3.51E-01
Acrolein	9.10E-03	1.09E-02			6.62E-05	8.53E-05	4.34E-05	1.90E-04							9.21E-03	1.11E-02
Antimony	6.30E-05	7.52E-05	1.61E-05	7.04E-05											7.91E-05	1.46E-04
Barium	2.03E-03	2.42E-03	2.16E-06	9.45E-06											2.03E-03	2.43E-03
Bromomethane	2.09E-04	2.50E-04							9.46E-06	1.13E-05	0.00E+00	0.00E+00	1.40E-04	1.67E-04	3.58E-04	4.28E-04
Carbon Disulfide	6.83E-04	8.16E-04							3.09E-05	3.69E-05	0.00E+00	0.00E+00	1.89E-04	2.26E-04	9.03E-04	1.08E-03
Chloroethane/Ethyl chloride	1.71E-04	2.04E-04							7.72E-06	9.22E-06	0.00E+00	0.00E+00	3.06E-06	3.65E-06	1.82E-04	2.17E-04
Chloromethane/Methyl chloride	9.82E-04	1.17E-03							4.44E-05	5.30E-05	0.00E+00	0.00E+00	2.18E-04	2.61E-04	1.24E-03	1.49E-03
Chromium	1.93E-03	2.30E-03	6.43E-04	2.82E-03											2.57E-03	5.11E-03
Cobalt	9.10E-06	1.09E-05	1.88E-05	8.13E-05											2.77E-05	9.22E-05
Copper	1.09E-03	1.30E-03	3.00E-06	1.31E-05											1.09E-03	1.31E-03
Crotonaldehyde	3.01E-02	3.59E-02													3.01E-02	3.59E-02
Cumene													1.60E-03	1.91E-03	1.60E-03	1.91E-03
Dichlorobenzene			5.88E-07	2.58E-06											5.88E-07	2.58E-06
Ethyl Benzene	8.56E-02	1.02E-01							7.33E-05	8.76E-05	0.00E+00	0.00E+00	4.08E-03	4.87E-03	8.98E-02	1.07E-01
Heptane	3.29E+00	3.93E+00													3.29E+00	3.93E+00
Hexane	3.26E-01	3.89E-01	8.82E-04	3.86E-03					1.93E-04	2.30E-04	0.00E+00	0.00E+00	2.18E-03	2.61E-03	3.30E-01	3.96E-01
Hydrochloric Acid	7.35E-02	8.77E-02	2.36E-02	1.03E-01											9.71E-02	1.91E-01
Manganese	2.70E-03	3.22E-03	1.79E-04	7.82E-04											2.87E-03	4.00E-03
Mercury	9.10E-04	1.09E-03	1.50E-06	6.57E-06											9.12E-04	1.09E-03
Methyl Chloroform	1.68E-02	2.01E-02													1.68E-02	2.01E-02
Methyl Ethyl Ketone	8.67E-03	1.03E-02							7.53E-05	8.99E-05	0.00E+00	0.00E+00	7.13E-04	8.52E-04	9.45E-03	1.13E-02
Molybdenum			5.39E-07	2.36E-06											5.39E-07	2.36E-06
Naphthalene	2.29E-01	2.74E-01	6.07E-05	2.66E-04	1.09E-03	1.41E-03	3.98E-05	1.74E-04			0.00E+00	0.00E+00	1.49E-03	1.78E-03	2.32E-01	2.77E-01
n-Pentane	7.35E-02	8.77E-02	1.27E-03	5.58E-03											7.48E-02	9.33E-02
Phenol	0.00E+00	0.00E+00	1.00E-07	4.38E-07							0.00E+00	0.00E+00	1.41E-03	1.68E-03	1.41E-03	1.68E-03
Phosphorus	9.80E-03	1.17E-02													9.80E-03	1.17E-02
Propionaldehyde	4.55E-02	5.43E-02													4.55E-02	5.43E-02
Quinone	5.60E-02	6.69E-02													5.60E-02	6.69E-02
Selenium	1.23E-04	1.46E-04	7.50E-06	3.29E-05											1.30E-04	1.79E-04
Silver	1.68E-04	2.01E-04													1.68E-04	2.01E-04
Styrene	2.31E-04	2.75E-04							1.04E-05	1.24E-05	0.00E+00	0.00E+00	1.06E-04	1.27E-04	3.47E-04	4.15E-04
Thallium	1.44E-06	1.71E-06													1.44E-06	1.71E-06
Toluene	1.02E+00	1.21E+00	1.67E-06	7.30E-06	2.36E-03	3.04E-03	1.92E-04	8.40E-04	1.20E-04	1.43E-04	0.00E+00	0.00E+00	3.06E-03	3.65E-03	1.02E+00	1.22E+00
Valeraldehyde	2.35E-02	2.80E-02													2.35E-02	2.80E-02
Vanadium			1.13E-06	4.94E-06											1.13E-06	4.94E-06
Xylenes	8.10E-02	9.67E-02			1.62E-03	2.09E-03	1.34E-04	5.85E-04	4.96E-04	5.92E-04	0.00E+00	0.00E+00	7.13E-03	8.52E-03	9.04E-02	1.08E-01
Zinc	2.14E-02	2.55E-02	1.42E-05	6.23E-05											2.14E-02	2.55E-02

Potential To Emit - Carcinogen Toxic Air Pollutants

Carcinogen TAP	HMA Drum Dryer		Asphalt Heater		Operations Generator		Night Generator		Asphalt Storage Tank		Silo Filling		Loadout		TOTAL	
	lb/hr	T/yr	lb/hr	T/yr	lb/hr	T/yr	lb/hr	T/yr	lb/hr	T/yr	lb/hr	T/yr	lb/hr	T/yr	lb/hr	T/yr
Acenaphthene	9.08E-04	1.08E-03	1.89E-06	8.29E-06	3.93E-05	5.07E-05	6.66E-07	2.92E-06			0.00E+00	0.00E+00	3.10E-04	3.70E-04	1.26E-03	1.52E-03
Acenaphthylene	7.71E-03	9.21E-03	7.14E-07	3.13E-06	7.75E-05	1.00E-04	2.37E-06	1.04E-05			0.00E+00	0.00E+00	3.34E-05	3.99E-05	7.83E-03	9.36E-03
Acetaldehyde	4.55E-01	5.43E-01			2.12E-04	2.73E-04	3.60E-04	1.58E-03							4.56E-01	5.45E-01
Anthracene	1.20E-03	1.43E-03	6.43E-07	2.82E-06	1.03E-05	1.33E-05	8.77E-07	3.84E-06			0.00E+00	0.00E+00	8.35E-05	9.97E-05	1.30E-03	1.55E-03
Arsenic	1.96E-04	2.34E-04	2.14E-04	9.39E-04											4.10E-04	1.17E-03
Benzene	1.38E-01	1.65E-01	1.03E-06	4.51E-06	6.52E-03	8.40E-03	4.38E-04	1.92E-03	6.18E-05	7.37E-05	0.00E+00	0.00E+00	7.57E-04	9.04E-04	1.46E-01	1.76E-01
Benzo(a)pyrene	3.43E-06	4.09E-06	1.43E-05	6.26E-05	2.16E-06	2.78E-06	8.82E-08	3.86E-07			0.00E+00	0.00E+00	2.75E-06	3.28E-06	2.27E-05	7.31E-05
Benzo(g,h,i)perylene	1.40E-05	1.67E-05	5.88E-10	2.58E-09	4.67E-06	6.02E-06	2.29E-07	1.00E-06			0.00E+00	0.00E+00	2.27E-06	2.71E-06	2.12E-05	2.64E-05
Benzo(e)pyrene	4.69E-05	5.60E-05									0.00E+00	0.00E+00	9.31E-06	1.11E-05	5.63E-05	6.72E-05
Beryllium	0.00E+00	0.00E+00	6.43E-06	2.82E-05											6.43E-06	2.82E-05
Bis(2-ethylhexyl)phthalate			7.86E-06	3.44E-05											7.86E-06	3.44E-05
1,3-Butadiene							1.83E-05	8.03E-05							1.83E-05	8.03E-05
Cadmium	1.44E-04	1.71E-04	4.29E-05	1.88E-04											1.86E-04	3.59E-04
Chloromethane/Methyl chloride	9.82E-04	1.17E-03							4.44E-05	5.30E-05	0.00E+00	0.00E+00	2.18E-04	2.61E-04	1.24E-03	1.49E-03
Hexavalent Chromium	1.58E-04	1.88E-04													1.58E-04	1.88E-04
Total Dioxin/Furans	4.20E-08	5.01E-08	8.21E-10	3.60E-09											4.28E-08	5.37E-08
Fluoranthene	3.47E-04	4.14E-04	1.57E-07	6.88E-07	3.39E-05	4.36E-05	3.57E-06	1.56E-05			0.00E+00	0.00E+00	5.97E-05	7.12E-05	4.44E-04	5.45E-04
Fluorene	4.75E-03	5.67E-03	1.14E-07	5.01E-07	1.08E-04	1.39E-04	1.37E-05	6.00E-05			0.00E+00	0.00E+00	9.19E-04	1.10E-03	5.79E-03	6.96E-03
Formaldehyde	1.11E+00	1.33E+00	2.18E-04	9.54E-04	6.63E-04	8.54E-04	5.53E-04	2.42E-03	1.33E-03	1.59E-03	0.00E+00	0.00E+00	1.28E-03	1.53E-03	1.12E+00	1.34E+00
3-Methylchloranthrene			8.82E-10	3.86E-09											8.82E-10	3.86E-09
Methylene Chloride/Dichloromethane	1.15E-05	1.38E-05							5.21E-07	6.22E-07	0.00E+00	0.00E+00	0.00E+00	0.00E+00	1.21E-05	1.44E-05
2-Methylnaphthalene	6.42E-02	7.66E-02	1.18E-08	5.15E-08							0.00E+00	0.00E+00	2.84E-03	3.39E-03	6.70E-02	8.00E-02
Naphthalene	2.29E-01	2.74E-01	6.07E-05	2.66E-04	1.09E-03	1.41E-03	3.98E-05	1.74E-04			0.00E+00	0.00E+00	1.49E-03	1.78E-03	2.32E-01	2.77E-01
Nickel	2.21E-02	2.63E-02	5.71E-04	2.50E-03											2.26E-02	2.88E-02
Perylene	2.98E-05	3.55E-05									0.00E+00	0.00E+00	2.63E-05	3.13E-05	5.60E-05	6.69E-05
Phenanthrene	9.65E-03	1.15E-02	1.75E-05	7.67E-05	3.43E-04	4.42E-04	1.38E-05	6.04E-05			0.00E+00	0.00E+00	9.67E-04	1.15E-03	1.10E-02	1.33E-02
POM	4.28E-04	5.11E-04	4.29E-05	1.88E-04	3.77E-05	4.86E-05	1.61E-06	7.05E-06			0.00E+00	0.00E+00	1.61E-04	1.92E-04	6.71E-04	9.47E-04
Pyrene	1.44E-03	1.72E-03	1.14E-07	5.01E-07	3.12E-05	4.02E-05	2.24E-06	9.82E-06			0.00E+00	0.00E+00	1.79E-04	2.14E-04	1.65E-03	1.98E-03
2,3,7,8-TCDD	7.35E-11	8.77E-11													7.35E-11	8.77E-11
Tetrachloroethene/ Tetrachloroethylene													1.12E-04	1.34E-04	1.12E-04	1.34E-04
Trichloroethene/ Trichloroethylene													0.00E+00	0.00E+00	0.00E+00	0.00E+00

Potential To Emit - CAA Hazardous Air Pollutants

HAP	HMA Drum Dryer		Asphalt Heater		Operations Generator		Night Generator		Asphalt Storage Tank		Silo Filling[2]		Loadout		TOTAL	
	lb/hr	T/yr	lb/hr	T/yr	lb/hr	T/yr	lb/hr	T/yr	lb/hr	T/yr	lb/hr	T/yr	lb/hr	T/yr	lb/hr	T/yr
Acenaphthene	4.90E-04	5.85E-04	1.89E-06	8.29E-06	3.93E-05	5.07E-05	6.66E-07	2.92E-06			4.18E-04	4.99E-04	3.10E-04	3.70E-04	0.0013	0.0015
Acenaphthylene	7.70E-03	9.19E-03	7.14E-07	3.13E-06	7.75E-05	1.00E-04	2.37E-06	1.04E-05			1.24E-05	1.49E-05	3.34E-05	3.99E-05	0.0078	0.0094
Acetaldehyde	4.55E-01	5.43E-01	0.00E+00	0.00E+00	2.12E-04	2.73E-04	3.60E-04	1.58E-03							0.4556	0.5450
Acrolein	9.10E-03	1.09E-02	0.00E+00	0.00E+00	6.62E-05	8.53E-05	4.34E-05	1.90E-04							0.0092	0.0111
Antimony	6.30E-05	7.52E-05	1.61E-05	7.04E-05											0.0001	0.0001
Anthracene	1.09E-03	1.30E-03	6.43E-07	2.82E-06	1.03E-05	1.33E-05	8.77E-07	3.84E-06			1.16E-04	1.38E-04	8.35E-05	9.97E-05	0.0013	0.0016
Arsenic	1.96E-04	2.34E-04	2.14E-04	9.39E-04											0.0004	0.0012
Benzene	1.37E-01	1.63E-01	1.03E-06	4.51E-06	6.52E-03	8.40E-03	4.38E-04	1.92E-03	6.18E-05	7.37E-05	1.37E-03	1.63E-03	7.57E-04	9.04E-04	0.1456	0.1759
Benzo(a)anthracene	7.35E-05	8.77E-05	1.43E-05	6.26E-05	5.22E-06	6.74E-06	7.88E-07	3.45E-06			4.98E-05	5.94E-05	2.27E-05	2.71E-05	0.0002	0.0002
Benzo(a)pyrene	3.43E-06	4.09E-06	1.43E-05	6.26E-05	2.16E-06	2.78E-06	8.82E-08	3.86E-07			0.00E+00	0.00E+00	2.75E-06	3.28E-06	0.0000	0.0001
Benzo(b)fluoranthene	3.50E-05	4.18E-05	3.57E-07	1.56E-06	9.32E-06	1.20E-05	4.65E-08	2.04E-07			0.00E+00	0.00E+00	9.07E-06	1.08E-05	0.0001	0.0001
Benzo(e)pyrene	3.85E-05	4.60E-05	0.00E+00	0.00E+00							8.45E-06	1.01E-05	9.31E-06	1.11E-05	0.0001	0.0001
Benzo(g,h,i)perylene	1.40E-05	1.67E-05	5.88E-10	2.58E-09	4.67E-06	6.02E-06	2.29E-07	1.00E-06			0.00E+00	0.00E+00	2.27E-06	2.71E-06	0.0000	0.0000
Benzo(k)fluoranthene	1.44E-05	1.71E-05	8.82E-10	3.86E-09	1.83E-06	2.36E-06	7.27E-08	3.18E-07			0.00E+00	0.00E+00	2.63E-06	3.13E-06	0.0000	0.0000
Beryllium	0.00E+00	0.00E+00	6.43E-06	2.82E-05											0.0000	0.0000
Bis(2-ethylhexyl)phthalate			7.86E-06	3.44E-05											0.0000	0.0000
Bromomethane									9.46E-06	1.13E-05	2.09E-04	2.50E-04	1.40E-04	1.67E-04	0.0004	0.0004
1,3-Butadiene	0.00E+00	0.00E+00	0.00E+00	0.00E+00			1.83E-05	8.03E-05							0.0000	0.0001
Cadmium	1.44E-04	1.71E-04	4.29E-05	1.88E-04											0.0002	0.0004
Carbon Disulfide	0.00E+00	0.00E+00	0.00E+00	0.00E+00					3.09E-05	3.69E-05	6.83E-04	8.16E-04	1.89E-04	2.26E-04	0.0009	0.0011
Chloroethane/Ethyl Chloride									7.72E-06	9.22E-06	1.71E-04	2.04E-04	3.06E-06	3.65E-06	0.0002	0.0002
Chloromethane/Methyl chloride									4.44E-05	5.30E-05	9.82E-04	1.17E-03	2.18E-04	2.61E-04	0.0012	0.0015
Chromium	1.93E-03	2.30E-03	6.43E-04	2.82E-03											0.0026	0.0051
Hexavalent Chromium	1.58E-04	1.88E-04	0.00E+00	0.00E+00											0.0002	0.0002
Chrysene	6.30E-05	7.52E-05	1.43E-05	6.26E-05	1.28E-05	1.65E-05	1.66E-07	7.25E-07			1.87E-04	2.23E-04	1.23E-04	1.47E-04	0.0004	0.0005
Cobalt	9.10E-06	1.09E-05	1.86E-05	8.13E-05											0.0000	0.0001
Cumene	0.00E+00	0.00E+00	0.00E+00	0.00E+00									1.60E-03	1.91E-03	0.0016	0.0019
Dibenzo(a,h)anthracene	0.00E+00	0.00E+00	5.88E-10	2.58E-09	2.91E-06	3.75E-06	2.73E-07	1.20E-06			0.00E+00	0.00E+00	4.42E-07	5.27E-07	0.0000	0.0000
Dibutylphthalate			1.21E-07	5.32E-07											0.0000	0.0000
Dichlorobenzene	0.00E+00	0.00E+00	5.88E-07	2.58E-06											0.0000	0.0000
Ethyl Benzene	8.40E-02	1.00E-01	0.00E+00	0.00E+00					7.33E-05	8.76E-05	1.62E-03	1.94E-03	4.08E-03	4.87E-03	0.0898	0.1072
Fluoranthene	2.14E-04	2.55E-04	1.57E-07	6.88E-07	3.39E-05	4.36E-05	3.57E-06	1.56E-05			1.33E-04	1.59E-04	5.97E-05	7.12E-05	0.0004	0.0005
Fluorene	3.85E-03	4.60E-03	1.14E-07	5.01E-07	1.08E-04	1.39E-04	1.37E-05	6.00E-05			8.98E-04	1.07E-03	9.19E-04	1.10E-03	0.0058	0.0070
Formaldehyde	1.09E+00	1.30E+00	2.18E-04	9.54E-04	6.63E-04	8.54E-04	5.53E-04	2.42E-03	1.33E-03	1.59E-03	2.95E-02	3.52E-02	1.28E-03	1.53E-03	1.1185	1.3377
Hexane	3.22E-01	3.84E-01	8.82E-04	3.86E-03					1.93E-04	2.30E-04	4.27E-03	5.10E-03	2.18E-03	2.61E-03	0.3295	0.3962
HCl	7.35E-02	8.77E-02	2.36E-02	1.03E-01											0.0971	0.1910
Indeno(1,2,3-cd)pyrene	2.45E-06	2.92E-06	8.82E-10	3.86E-09	3.48E-06	4.48E-06	1.76E-07	7.70E-07			0.00E+00	0.00E+00	5.61E-07	6.70E-07	0.0000	0.0000
Lead	5.25E-03	6.27E-03	1.79E-03	7.82E-03											0.0070	0.0141
Manganese	2.70E-03	3.22E-03	1.79E-04	7.82E-04											0.0029	0.0040
Mercury	9.10E-04	1.09E-03	1.50E-06	6.57E-06											0.0009	0.0011
Methyl Chloroform	1.68E-02	2.01E-02	0.00E+00	0.00E+00									0.00E+00	0.00E+00	0.0168	0.0201
Methyl Ethyl Ketone	7.00E-03	8.36E-03	0.00E+00	0.00E+00					7.53E-05	8.99E-05	1.67E-03	1.99E-03	7.13E-04	8.52E-04	0.0095	0.0113
Methylene Chloride/Dichloromethane									5.21E-07	6.22E-07	1.15E-05	1.38E-05			0.0000	0.0000
2-Methylnaphthalene	5.95E-02	7.10E-02	8.82E-10	3.86E-09							4.69E-03	5.59E-03	2.84E-03	3.39E-03	0.0670	0.0800
3-Methylchloranthrene	0.00E+00	0.00E+00	1.18E-08	5.15E-08											0.0000	0.0000
Naphthalene	2.28E-01	2.72E-01	6.07E-05	2.66E-04	1.09E-03	1.41E-03	3.98E-05	1.74E-04			1.62E-03	1.93E-03	1.49E-03	1.78E-03	0.2318	0.2771
Nickel	2.21E-02	2.63E-02	5.71E-04	2.50E-03											0.0226	0.0288
Pentane	0.00E+00	0.00E+00	1.27E-03	5.58E-03											0.0013	0.0056
Perylene	3.08E-06	3.68E-06	0.00E+00	0.00E+00							2.67E-05	3.18E-05	2.63E-05	3.13E-05	0.0001	0.0001
Phenanthrene	8.05E-03	9.61E-03	1.75E-05	7.67E-05	3.43E-04	4.42E-04	1.38E-05	6.04E-05			1.60E-03	1.91E-03	9.67E-04	1.15E-03	0.0110	0.0133
Phenol			1.00E-07	4.38E-07							0.00E+00	0.00E+00	1.41E-03	1.68E-03	0.0014	0.0017
Phosphorus	9.80E-03	1.17E-02	0.00E+00	0.00E+00											0.0098	0.0117
POM	3.10E-01	3.70E-01	1.25E-04	5.48E-04	1.78E-03	2.29E-03	7.88E-05	3.45E-04			1.01E-02	1.21E-02	7.08E-03	8.46E-03	0.3289	0.3934
Propionaldehyde	4.55E-02	5.43E-02	0.00E+00	0.00E+00											0.0455	0.0543
Pyrene	1.05E-03	1.25E-03	1.14E-07	5.01E-07	3.12E-05	4.02E-05	2.24E-06	9.82E-06			3.91E-04	4.67E-04	1.79E-04	2.14E-04	0.0017	0.0020
Quinone	5.60E-02	6.69E-02													0.0560	0.0669
Selenium	1.23E-04	1.46E-04	7.50E-06	3.29E-05											0.0001	0.0002
Styrene	0.00E+00	0.00E+00	0.00E+00	0.00E+00					1.04E-05	1.24E-05	2.31E-04	2.75E-04	1.06E-04	1.27E-04	0.0003	0.0004
2,3,7,8-TCDD	7.35E-11	8.77E-11	0.00E+00	0.00E+00											0.0000	0.0000
Tetrachloroethene/ Tetrachloroethylene													1.12E-04	1.34E-04	0.0001	0.0001
Toluene	1.02E+00	1.21E+00	1.67E-06	7.30E-06	2.36E-03	3.04E-03	1.92E-04	8.40E-04	1.20E-04	1.43E-04	2.65E-03	3.16E-03	3.06E-03	3.65E-03	1.0234	1.2225
Total PCDD/PCDF	4.20E-08	5.01E-08	8.21E-10	3.60E-09											0.0000	0.0000
Trichloroethene/ Trichloroethylene			0.00E+00	0.00E+00									0.00E+00	0.00E+00	0.0000	0.0000
Xylene	7.00E-02	8.36E-02	0.00E+00	0.00E+00	1.62E-03	2.09E-03	1.34E-04	5.85E-04	4.96E-04	5.92E-04	1.10E-02	1.31E-02	7.13E-03	8.52E-03	0.0904	0.1084
TOTALS:															3.87	4.72

1) POM & Total PCDD/PCDF: Maximum PTE estimates for POM based on polycyclic organic matter mixture as defined by 1900 CAA Amendments. Refer to individual unit emission estimates for compounds included in the mixture. To avoid double counting, the total, maximum PTE estimates do not include POM (i.e., individual compounds are summed separately) or 2, 3, 7, 8-TCDD (included in Total PCDD/PCDF).

2) Note that Silo Filling emissions are actually routed through the Drum Dryer/Baghouse. Presented seperately here for HAP threshold assessment purposes only.

APPENDIX 4

Emissions Inventory at 400 T/hr Production

Emission Unit:	Drum Dryer
Manufacturer /Model:	Gencor, Model 400 Portable Insulated Ultradrum with Ultra II-
Production capacity (T/hr):	400
Burner capacity (MMBTU/hr):	135
Fuel Type(s):	RFO, #2 Diesel, natural gas, or propane
Daily Hours of Operation (hr/d)	12.5
Max Daily Production (T/d)	5000
Annual Hours of Operation (hr/yr):	2387.5
Max Annual Production (T/yr):	955000

Control Equipment:	Gencor Baghouse, Model CFP-182

RFO and Diesel (MMBTU/1000 gallons):	140	(AP-42, App A)
Nat. gas (BTU/scf):	1020	(AP-42, Table 1.4-1, footnote (a))
Propane (MMBTU/1000 gallons):	91.5	(AP-42, Table 1.5-1, footnote (a))
Propane (BTU/scf):	2504	(http://www.engineeringtoolbox.com/fuel-gases-combustion-values-d_510.html)

Potential To Emit - Criteria Pollutants

Criteria Pollutant	RFO			#2 Diesel			Nat. Gas			Propane			Max lb/hr	Max T/yr	Max 24hr Ave lb/hr	Max Annual Ave lb/hr
	EF	lb/hr	T/yr	EF	lb/hr	T/yr	EF	lb/hr	T/yr	EF	lb/hr	T/yr				
CO	0.13	52.00	62.08	0.13	52.00	62.08	0.13	52.000	62.08	0.13	52.000	62.08	52.00	62.08	27.08	14.17
CO2e		13378.52	15970.61		13378.52	15970.61		13391.06	15985.58		13611.89	16369.22	13611.89	16369.22	7089.53	3709.86
NOx	0.055	22.00	26.26	0.055	22.00	26.26	0.026	10.400	12.42	0.039	15.600	18.62	22.00	26.26	11.46	6.00
SO2	0.058	23.20	27.70	0.011	4.40	5.25	0.0034	1.360	1.62	0.0034	1.360	1.62	23.20	27.70	12.08	6.32
PM	0.033	13.20	15.76	0.033	13.20	15.76	0.033	13.200	15.76	0.033	13.200	15.76	13.20	15.76	6.88	3.60
PM10	0.023	9.20	10.98	0.023	9.20	10.98	0.023	9.200	10.98	0.023	9.200	10.98	9.20	10.98	4.79	2.51
PM2.5		4.40	5.25		4.40	5.25		4.40	5.25		4.40	5.25	4.40	5.25	2.29	1.20
VOC	0.032	12.80	15.28	0.032	12.80	15.28	0.032	12.800	15.28	0.032	12.800	15.28	12.80	15.28	6.67	3.49
Lead	0.000015	0.01	0.01	0.000015	0.01	0.01	6.2E-07	0.00	0.00	6.2E-07	0.00	0.00	0.01	0.01	0.00	0.00

Emission Factor Information:

1) Carbon Monoxide: Emission factors from AP-42 (3/04), Table 11.1-7. For propane, the EF for natural gas combustion was applied. EFs are expressed in pounds of CO per ton of HMA produced.

2) Carbon Dioxide Equivalent: Refer to Greenhouse Gases table for calculation methodology.

3) Nitrogen Oxides: Emission factors from AP-42 (3/04), Table 11.1-7. For propane, the NOx EF for natural gas has been multiplied by a factor of 1.5, per footnote (a) from Table 1.5-1, Emission Factors for LPG Combustion (i.e., "The NOx emission factors have been multiplied by a factor of 1.5, which is the approximate ratio of propane/butane NOx emissions to natural gas Nox emissions."). EFs expressed in pounds of NOx per ton of HMA produced.

4) Sulfur Dioxide: Emission factors from AP-42 (3/04), Table 11.1-7. For propane, the EF for natural gas combustion was applied. EFs are expressed in pounds of SOx per ton of HMA produced.

5) Particulate Matter: Emission factors based on AP-42 (3/04), Table 11.1-3, for fabric filter and Total PM. EFs are expressed in pounds of PM-10 per ton of HMA produced.

6) PM-10: Emission factors based on AP-42 (3/04), Table 11.1-3, for fabric filter and Total PM-10. EFs are expressed in pounds of PM-10 per ton of HMA produced.

7) PM-2.5: Emission factors based on AP-42 (3/04), Table 11.1-3, for fabric filter and Total PM. To derive PM2.5, a speciation factor of 0.333 was applied (California Air Resources Board, 7/2009). EFs are expressed in pounds of PM-2.5 per ton of HMA produced.

8) VOC: Emission factors from AP-42 (3/04), Table 11.1-8. For propane, the EF for natural gas combustion was applied. EFs are expressed in pounds of VOC per ton of HMA produced.

9) Lead: Emission factors from AP-42 (3/04), Table 11.1-12, for fabric filter. EFs are expressed in pounds of Pb per ton of HMA produced.

Potential To Emit - Non-Carcinogenic TAPs

Non-Carcinogen TAP	RFO			#2 Diesel			Nat. Gas			Propane			Max lb/hr	Max T/yr	Max 24hr Ave lb/hr	Max Annual Ave lb/hr
	EF	lb/hr	T/yr	EF	lb/hr	T/yr	EF	lb/hr	T/yr	EF	lb/hr	T/yr				
Acetone	8.3E-04	3.3E-01	4.0E-01		0.0E+00	0.0E+00		0.0E+00	0.0E+00		0.0E+00	0.0E+00	3.32E-01	3.96E-01	1.73E-01	9.05E-02
Acrolein	2.6E-05	1.0E-02	1.2E-02		0.0E+00	0.0E+00		0.0E+00	0.0E+00		0.0E+00	0.0E+00	1.04E-02	1.24E-02	5.42E-03	2.83E-03
Antimony	1.8E-07	7.2E-05	8.6E-05	1.8E-07	7.2E-05	8.6E-05	1.8E-07	7.2E-05	8.6E-05	1.8E-07	7.2E-05	8.6E-05	7.20E-05	8.60E-05	3.75E-05	1.96E-05
Barium	5.8E-67	2.3E-64	2.8E-64	5.8E-06	2.3E-03	2.8E-03	5.8E-06	2.3E-03	2.8E-03	5.8E-06	2.3E-03	2.8E-03	2.32E-03	2.77E-03	1.21E-03	6.32E-04
Chromium	5.5E-06	2.2E-03	2.6E-03	5.5E-06	2.2E-03	2.6E-03	5.5E-06	2.2E-03	2.6E-03	5.5E-06	2.2E-03	2.6E-03	2.20E-03	2.63E-03	1.15E-03	6.00E-04
Cobalt	2.6E-08	1.0E-05	1.2E-05	2.6E-08	1.0E-05	1.2E-05	2.6E-08	1.0E-05	1.2E-05	2.6E-08	1.0E-05	1.2E-05	1.0E-05	1.2E-05	5.4E-06	2.8E-06
Copper	3.1E-06	1.2E-03	1.5E-03	3.1E-06	1.2E-03	1.5E-03	3.1E-06	1.2E-03	1.5E-03	3.1E-06	1.2E-03	1.5E-03	1.2E-03	1.5E-03	6.5E-04	3.4E-04
Crotonaldehyde	8.6E-05	3.4E-02	4.1E-02		0.0E+00	0.0E+00		0.0E+00	0.0E+00		0.0E+00	0.0E+00	3.44E-02	4.11E-02	1.79E-02	9.38E-03
Ethyl Benzene	2.4E-04	9.6E-02	1.1E-01	2.4E-04	9.6E-02	1.1E-01	2.4E-04	9.6E-02	1.1E-01	2.4E-04	9.6E-02	1.1E-01	9.60E-02	1.15E-01	5.00E-02	2.62E-02
Heptane	9.4E-03	3.8E+00	4.5E+00	9.4E-03	3.8E+00	4.5E+00	9.4E-03	3.8E+00	4.5E+00	9.4E-03	3.8E+00	4.5E+00	3.76E+00	4.49E+00	1.96E+00	1.02E+00
Hexane	9.2E-04	3.7E-01	4.4E-01	9.2E-04	3.7E-01	4.4E-01	9.2E-04	3.7E-01	4.4E-01	9.2E-04	3.7E-01	4.4E-01	3.68E-01	4.39E-01	1.92E-01	1.00E-01
Hydrochloric Acid	2.1E-04	8.4E-02	1.0E-01		0.0E+00	0.0E+00		0.0E+00	0.0E+00		0.0E+00	0.0E+00	8.4E-02	1.0E-01	4.4E-02	2.3E-02
Manganese	7.7E-06	3.1E-03	3.7E-03	7.7E-06	3.1E-03	3.7E-03	7.7E-06	3.1E-03	3.7E-03	7.7E-06	3.1E-03	3.7E-03	3.1E-03	3.7E-03	1.6E-03	8.4E-04
Mercury	2.6E-06	1.0E-03	1.2E-03	2.6E-06	1.0E-03	1.2E-03	2.4E-07	9.6E-05	1.1E-04	2.4E-07	9.6E-05	1.1E-04	1.0E-03	1.2E-03	5.4E-04	2.8E-04
Methyl Chloroform	4.8E-05	1.9E-02	2.3E-02	4.8E-05	1.9E-02	2.3E-02	4.8E-05	1.9E-02	2.3E-02	4.8E-05	1.9E-02	2.3E-02	1.92E-02	2.29E-02	1.00E-02	5.23E-03
Methyl Ethyl Ketone	2.0E-05	8.0E-03	9.6E-03		0.0E+00	0.0E+00		0.0E+00	0.0E+00		0.0E+00	0.0E+00	8.00E-03	9.55E-03	4.17E-03	2.18E-03
Naphthalene	6.5E-04	2.6E-01	3.1E-01	6.5E-04	2.6E-01	3.1E-01	9.0E-05	3.6E-02	4.3E-02	9.0E-05	3.6E-02	4.3E-02	2.60E-01	3.10E-01	1.35E-01	7.09E-02
n-Pentane	2.1E-04	8.4E-02	1.0E-01	2.1E-04	8.4E-02	1.0E-01	2.1E-04	8.4E-02	1.0E-01	2.1E-04	8.4E-02	1.0E-01	8.40E-02	1.00E-01	4.38E-02	2.29E-02
Phosphorus	2.8E-05	1.1E-02	1.3E-02	2.8E-05	1.1E-02	1.3E-02	2.8E-05	1.1E-02	1.3E-02	2.8E-05	1.1E-02	1.3E-02	1.12E-02	1.34E-02	5.83E-03	3.05E-03
Propionaldehyde	1.3E-04	5.2E-02	6.2E-02		0.0E+00	0.0E+00		0.0E+00	0.0E+00		0.0E+00	0.0E+00	5.20E-02	6.21E-02	2.71E-02	1.42E-02
Quinone	1.6E-04	6.4E-02	7.6E-02		0.0E+00	0.0E+00		0.0E+00	0.0E+00		0.0E+00	0.0E+00	6.40E-02	7.64E-02	3.33E-02	1.74E-02
Selenium	3.5E-07	1.4E-04	1.7E-04	3.5E-07	1.4E-04	1.7E-04	3.5E-07	1.4E-04	1.7E-04	3.5E-07	1.4E-04	1.7E-04	1.40E-04	1.67E-04	7.29E-05	3.82E-05
Silver	4.8E-07	1.9E-04	2.3E-04	4.8E-07	1.9E-04	2.3E-04	4.8E-07	1.9E-04	2.3E-04	4.8E-07	1.9E-04	2.3E-04	1.92E-04	2.29E-04	1.00E-04	5.23E-05
Thallium	4.1E-09	1.6E-06	2.0E-06	4.1E-09	1.6E-06	2.0E-06	4.1E-09	1.6E-06	2.0E-06	4.1E-09	1.6E-06	2.0E-06	1.64E-06	1.96E-06	8.54E-07	4.47E-07
Toluene	2.9E-03	1.2E+00	1.4E+00	2.9E-03	1.2E+00	1.4E+00	1.5E-04	6.0E-02	7.2E-02	1.5E-04	6.0E-02	7.2E-02	1.16E+00	1.38E+00	6.04E-01	3.16E-01
Valeraldehyde	6.7E-05	2.7E-02	3.2E-02		0.0E+00	0.0E+00		0.0E+00	0.0E+00		0.0E+00	0.0E+00	2.68E-02	3.20E-02	1.40E-02	7.30E-03
Xylene	2.0E-04	8.0E-02	9.6E-02	2.0E-04	8.0E-02	9.6E-02	2.0E-04	8.0E-02	9.6E-02	2.0E-04	8.0E-02	9.6E-02	8.00E-02	9.55E-02	4.17E-02	2.18E-02
Zinc	6.1E-05	2.4E-02	2.9E-02	6.1E-05	2.4E-02	2.9E-02	6.1E-05	2.4E-02	2.9E-02	6.1E-05	2.4E-02	2.9E-02	2.44E-02	2.91E-02	1.27E-02	6.65E-03
TOTALS:			7.738			7.011			5.429			5.429	6.485	7.741		

Potential To Emit - Carcinogenic TAPs

Carcinogen TAP	RFO			#2 Diesel			Nat. Gas			Propane			Max lb/hr	Max T/yr	Max 24hr Ave lb/hr	Max Annual Ave lb/hr
	EF	lb/hr	T/yr	EF	lb/hr	T/yr	EF	lb/hr	T/yr	EF	lb/hr	T/yr				
Acenaphthene	1.4E-06	5.6E-04	6.7E-04	1.40E-06	5.6E-04	6.7E-04	1.40E-06	5.6E-04	6.7E-04	1.40E-06	5.6E-04	6.7E-04	5.60E-04	6.69E-04	2.92E-04	1.53E-04
Acenaphthylene	2.2E-05	8.8E-03	1.1E-02	2.20E-05	8.8E-03	1.1E-02	8.60E-06	3.4E-03	4.1E-03	8.60E-06	3.4E-03	4.1E-03	8.80E-03	1.05E-02	4.58E-03	2.40E-03
Acetaldehyde	1.3E-03	5.2E-01	6.2E-01		0.0E+00	0.0E+00		0.0E+00	0.0E+00		0.0E+00	0.0E+00	5.20E-01	6.21E-01	2.71E-01	1.42E-01
Anthracene	3.1E-06	1.2E-03	1.5E-03	3.1E-06	1.2E-03	1.5E-03	2.2E-07	8.8E-05	1.1E-04	2.2E-07	8.8E-05	1.1E-04	1.24E-03	1.48E-03	6.46E-04	3.38E-04
Arsenic	5.6E-07	2.2E-04	2.7E-04	5.6E-07	2.2E-04	2.7E-04	5.6E-07	2.2E-04	2.7E-04	5.6E-07	2.2E-04	2.7E-04	2.24E-04	2.67E-04	1.17E-04	6.11E-05
Benzene	3.9E-04	1.6E-01	1.9E-01	3.9E-04	1.6E-01	1.9E-01	3.9E-04	1.6E-01	1.9E-01	3.9E-04	1.6E-01	1.9E-01	1.56E-01	1.86E-01	8.13E-02	4.25E-02
Benzo(a)pyrene	9.80E-09	3.9E-06	4.7E-06	9.80E-09	3.9E-06	4.7E-06	9.80E-09	3.9E-06	4.7E-06	9.80E-09	3.9E-06	4.7E-06	3.92E-06	4.68E-06	2.04E-06	1.07E-06
Benzo(g,h,i)perylene	4.0E-08	1.6E-05	1.9E-05	4.0E-08	1.6E-05	1.9E-05	4.0E-08	1.6E-05	1.9E-05	4.0E-08	1.6E-05	1.9E-05	1.60E-05	1.91E-05	8.33E-06	4.36E-06
Benzo(e)pyrene	1.1E-07	4.4E-05	5.3E-05	1.1E-07	4.4E-05	5.3E-05	1.1E-07	4.4E-05	5.3E-05	1.1E-07	4.4E-05	5.3E-05	4.40E-05	5.25E-05	2.29E-05	1.20E-05
Beryllium	0.0E+00	0.0E+00	0.0E+00	0.0E+00	0.0E+00	0.0E+00	0.0E+00	0.0E+00	0.0E+00	0.0E+00	0.0E+00	0.0E+00	0.00E+00	0.00E+00	0.00E+00	0.00E+00
Cadmium	4.1E-07	1.6E-04	2.0E-04	4.1E-07	1.6E-04	2.0E-04	4.1E-07	1.6E-04	2.0E-04	4.1E-07	1.6E-04	2.0E-04	1.64E-04	1.96E-04	8.54E-05	4.47E-05
Hexavalent Chromium	4.5E-07	1.8E-04	2.1E-04	4.5E-07	1.8E-04	2.1E-04	4.5E-07	1.8E-04	2.1E-04	4.5E-07	1.8E-04	2.1E-04	1.80E-04	2.15E-04	9.38E-05	4.91E-05
Dioxin/Furans (see below)													4.80E-08	5.73E-08		3.23E-10
Fluoranthene	6.1E-07	2.4E-04	2.9E-04	6.1E-07	2.4E-04	2.9E-04	6.1E-07	2.4E-04	2.9E-04	6.1E-07	2.4E-04	2.9E-04	2.44E-04	2.91E-04	1.27E-04	6.65E-05
Fluorene	1.1E-05	4.4E-03	5.3E-03	1.1E-05	4.4E-03	5.3E-03	3.8E-06	1.5E-03	1.8E-03	3.8E-06	1.5E-03	1.8E-03	4.40E-03	5.25E-03	2.29E-03	1.20E-03
Formaldehyde	3.1E-03	1.2E+00	1.5E+00	3.1E-03	1.2E+00	1.5E+00	3.1E-03	1.2E+00	1.5E+00	3.1E-03	1.2E+00	1.5E+00	1.24E+00	1.48E+00	6.46E-01	3.38E-01
2-Methylnaphthalene	1.7E-04	6.8E-02	8.1E-02	1.70E-04	6.8E-02	8.1E-02	7.40E-05	3.0E-02	3.5E-02	7.40E-05	3.0E-02	3.5E-02	6.80E-02	8.12E-02	3.54E-02	1.85E-02
Naphthalene	6.5E-04	2.6E-01	3.1E-01	6.5E-04	2.6E-01	3.1E-01	9.0E-05	3.6E-02	4.3E-02	9.0E-05	3.6E-02	4.3E-02	2.60E-01	3.10E-01	1.35E-01	7.09E-02
Nickel	6.3E-05	2.5E-02	3.0E-02	6.3E-05	2.5E-02	3.0E-02	6.3E-05	2.5E-02	3.0E-02	6.3E-05	2.5E-02	3.0E-02	2.52E-02	3.01E-02	1.31E-02	6.87E-03
Perylene	8.8E-09	3.5E-06	4.2E-06	8.8E-09	3.5E-06	4.2E-06	8.8E-09	3.5E-06	4.2E-06	8.8E-09	3.5E-06	4.2E-06	3.52E-06	4.20E-06	1.83E-06	9.59E-07
Phenanthrene	2.3E-05	9.2E-03	1.1E-02	2.3E-05	9.2E-03	1.1E-02	7.6E-06	3.0E-03	3.6E-03	7.6E-06	3.0E-03	3.6E-03	9.20E-03	1.10E-02	4.79E-03	2.51E-03
POM (see below)	5.5E-07	2.2E-04	2.6E-04	5.5E-07	2.2E-04	2.6E-04	5.5E-07	2.2E-04	2.6E-04	5.5E-07	2.2E-04	2.6E-04	2.19E-04	2.62E-04	1.14E-04	5.97E-05
Pyrene	3.0E-06	1.2E-03	1.4E-03	3.0E-06	1.2E-03	1.4E-03	5.4E-07	2.2E-04	2.6E-04	5.4E-07	2.2E-04	2.6E-04	1.20E-03	1.43E-03	6.25E-04	3.27E-04
2,3,7,8-TCDD	2.1E-13	8.4E-11	1.0E-10	2.1E-13	8.4E-11	1.0E-10		0.0E+00	0.0E+00		0.0E+00	0.0E+00	8.40E-11	1.00E-10	4.38E-11	2.29E-11
TOTALS:			2.74			2.12			1.79			1.79	2.30	2.74		

1) Metals: Emission factors from AP-42 (3/04), Table 11.1-12, for fabric filter. EF expressed in pounds of pollutant per ton of HMA produced.

2) Organic Pollutants: Emission factors from AP-42 (3/04), Table 11.1-10., for fabric filter. For propane, the EFs for natural gas have been applied. EF for HCl from RFO combustion from AP-42 (3/04), Table 11.1-8. EFs expressed in pounds of pollutant per ton of HMA produced.

3) Dioxin/Furans: Max Annual Ave value represents emissions from all dioxin/furan mixtures, expressed as equivalent emissions of 2,3,7,8-TCDD, per IDAPA 58.01.01.586. Refer to Dioxin/Furan Mixture table for calculation methodology.

4) POM: Emission factors for POM based on polyaromatic hydrocarbon mixture identified in IDAPA 58.01.01.586. Refer to Polycyclic Organic Matter Mixture table for calculation methodology.

Polycyclic Organic Matter Mixture

Polycyclic Organic Matter (POM)	RFO			#2 Diesel			Nat. Gas			Propane		
	EF	lb/hr	T/yr	EF	lb/hr	T/yr	EF	lb/hr	T/yr	EF	lb/hr	T/yr
Benzo(a)anthracene	2.10E-07	8.4E-05	1.0E-04	2.10E-07	8.4E-05	1.0E-04	2.10E-07	8.4E-05	1.0E-04	2.10E-07	8.4E-05	1.0E-04
Benzo(b)fluoranthene	1.00E-07	4.0E-05	4.8E-05	1.00E-07	4.0E-05	4.8E-05	1.00E-07	4.0E-05	4.8E-05	1.00E-07	4.0E-05	4.8E-05
Benzo(k)fluoranthene	4.10E-08	1.6E-05	2.0E-05	4.10E-08	1.6E-05	2.0E-05	4.10E-08	1.6E-05	2.0E-05	4.10E-08	1.6E-05	2.0E-05
Benzo(a)pyrene	9.80E-09	3.9E-06	4.7E-06	9.80E-09	3.9E-06	4.7E-06	9.80E-09	3.9E-06	4.7E-06	9.80E-09	3.9E-06	4.7E-06
Chrysene	1.80E-07	7.2E-05	8.6E-05	1.80E-07	7.2E-05	8.6E-05	1.80E-07	7.2E-05	8.6E-05	1.80E-07	7.2E-05	8.6E-05
Dibenzo(a,h)anthracene		0.0E+00	0.0E+00		0.0E+00	0.0E+00		0.0E+00	0.0E+00		0.0E+00	0.0E+00
Indeno(1,2,3-cd)pyrene	7.00E-09	2.8E-06	3.3E-06	7.00E-09	2.8E-06	3.3E-06	7.00E-09	2.8E-06	3.3E-06	7.00E-09	2.8E-06	3.3E-06
TOTALS:	5.48E-07		0.000	5.48E-07		0.000	5.48E-07		0.000	5.48E-07		0.000

Dioxin/Furan Mixture

Dioxin/Furan	RFO			#2 Diesel			Max lb/hr	Max T/yr	TEF	Adjusted Max Annual Ave lb/hr
	EF	lb/hr	T/yr	EF	lb/hr	T/yr				
2,3,7,8-TCDD	2.1E-13	8.4E-11	1.0E-10	2.1E-13	8.4E-11	1.0E-10	8.40E-11	1.00E-10	1.0	2.29E-11
Total TCDD	9.3E-13	3.7E-10	4.4E-10	9.3E-13	3.7E-10	4.4E-10	3.72E-10	4.44E-10		
1,2,3,7,8-PeCDD	3.1E-13	1.2E-10	1.5E-10	3.1E-13	1.2E-10	1.5E-10	1.24E-10	1.48E-10	1.0	3.38E-11
Total PeCDD	2.2E-11	8.8E-09	1.1E-08	2.2E-11	8.8E-09	1.1E-08	8.80E-09	1.05E-08		
1,2,3,4,7,8-HxCDD	4.2E-13	1.7E-10	2.0E-10	4.2E-13	1.7E-10	2.0E-10	1.68E-10	2.01E-10	0.10	4.58E-12
1,2,3,6,7,8-HxCDD	1.3E-12	5.2E-10	6.2E-10	1.3E-12	5.2E-10	6.2E-10	5.20E-10	6.21E-10	0.10	1.42E-11
1,2,3,7,8,9-HxCDD	9.8E-13	3.9E-10	4.7E-10	9.8E-13	3.9E-10	4.7E-10	3.92E-10	4.68E-10	0.10	1.07E-11
Total HxCDD	1.2E-11	4.8E-09	5.7E-09	1.2E-11	4.8E-09	5.7E-09	4.80E-09	5.73E-09		
1,2,3,4,6,7,8-Hp-CDD	4.8E-12	1.9E-09	2.3E-09	4.8E-12	1.9E-09	2.3E-09	1.92E-09	2.29E-09	0.01	5.23E-12
Total HpCDD	1.9E-11	7.6E-09	9.1E-09	1.9E-11	7.6E-09	9.1E-09	7.60E-09	9.07E-09		
Octa CDD	2.5E-11	1.0E-08	1.2E-08	2.5E-11	1.0E-08	1.2E-08	1.00E-08	1.19E-08	0.0003	8.18E-13
Total PCDD	7.9E-11	3.2E-08	3.8E-08	7.9E-11	3.2E-08	3.8E-08	3.16E-08	3.77E-08		
2,3,7,8-TCDF	9.7E-13	3.9E-10	4.6E-10	9.7E-13	3.9E-10	4.6E-10	3.88E-10	4.63E-10	0.1	1.06E-11
Total TCDF	3.7E-12	1.5E-09	1.8E-09	3.7E-12	1.5E-09	1.8E-09	1.48E-09	1.77E-09		
1,2,3,7,8-PeCDF	4.3E-12	1.7E-09	2.1E-09	4.3E-12	1.7E-09	2.1E-09	1.72E-09	2.05E-09	0.03	1.41E-11
2,3,4,7,8-PeCDF	8.4E-13	3.4E-10	4.0E-10	8.4E-13	3.4E-10	4.0E-10	3.36E-10	4.01E-10	0.30	2.75E-11
Total PeCDF	8.4E-11	3.4E-08	4.0E-08	8.4E-11	3.4E-08	4.0E-08	3.36E-08	4.01E-08		
1,2,3,4,7,8-HxCDF	4.0E-12	1.6E-09	1.9E-09	4.0E-12	1.6E-09	1.9E-09	1.60E-09	1.91E-09	0.10	4.36E-11
1,2,3,6,7,8-HxCDF	1.2E-12	4.8E-10	5.7E-10	1.2E-12	4.8E-10	5.7E-10	4.80E-10	5.73E-10	0.10	1.31E-11
2,3,4,6,7,8-HxCDF	1.9E-12	7.6E-10	9.1E-10	1.9E-12	7.6E-10	9.1E-10	7.60E-10	9.07E-10	0.10	2.07E-11
1,2,3,7,8,9-HxCDF	8.4E-12	3.4E-09	4.0E-09	8.4E-12	3.4E-09	4.0E-09	3.36E-09	4.01E-09	0.10	9.16E-11
Total HxCDF	1.3E-11	5.2E-09	6.2E-09	1.3E-11	5.2E-09	6.2E-09	5.20E-09	6.21E-09		
1,2,3,4,6,7,8-HpCDF	6.5E-12	2.6E-09	3.1E-09	6.5E-12	2.6E-09	3.1E-09	2.60E-09	3.10E-09	0.01	7.09E-12
1,2,3,4,7,8,9-HpCDF	2.7E-12	1.1E-09	1.3E-09	2.7E-12	1.1E-09	1.3E-09	1.08E-09	1.29E-09	0.01	2.94E-12
Total HpCDF	1.0E-11	4.0E-09	4.8E-09	1.0E-11	4.0E-09	4.8E-09	4.00E-09	4.78E-09		
Octa CDF	4.8E-12	1.9E-09	2.3E-09	4.8E-12	1.9E-09	2.3E-09	1.92E-09	2.29E-09	0.0003	1.57E-13
Total PCDF	4.0E-11	1.6E-08	1.9E-08	4.0E-11	1.6E-08	1.9E-08	1.60E-08	1.91E-08		
Total PCDD/PCDF	1.2E-10	4.8E-08	5.7E-08	1.2E-10	4.8E-08	5.7E-08	4.80E-08	5.73E-08		
							TOTAL ADJUSTED:			3.23E-10

1) Organic Pollutants: Emission factors from AP-42 (3/04), Table 11.1-10., for fabric filter. For propane, the EFs for natural gas have been applied. EF for dioxin/furans from nat. gas or propane not available. EFs expressed in pounds of pollutant per ton of HMA produced.

2) Toxic Equivalency Factors: 2005, Van den Berg, et al, The 2005 World Health Organization Reevaluation of Human and Mammalian Toxic Equivalency Factors for Dioxins and Dioxin-Like Compounds, Toxicological Sciences 93(2), 223-241 (2006). Accessible at http://toxsci.oxfordjournals.org/cgi/reprint/93/2/223. Use of the 2005 WHO toxic equivalency factors (TEFs) is consistent with current EPA recommendations for TRI reporting (72 FR 26544, May 10, 2007). IDAPA 58.01.01.586, TAPs Carcinogenic Increments: Total of adjusted emission rates are expressed as 2,3,7,8 TCDD equivalents.

Greenhouse Gases

GHG	RFO			#2 Diesel			Nat. Gas			Propane			Max lb/hr	Max T/yr
	EF	lb/hr	T/yr	EF	lb/hr	T/yr	EF	lb/hr	T/yr	EF	lb/hr	T/yr		
CO2	33.0	13200.00	15757.50	33.0	13200.00	15757.50	33.0	13200.00	15757.50	33.0	13200.00	15757.50	13200.00	15757.50
Methane	0.012	4.80	5.73	0.012	4.80	5.73	0.012	4.80	5.73	0.012	0.01	5.73	4.80	5.73
N2O	0.260	0.251	0.30	0.260	0.251	0.30	2.2	0.29	0.35	0.9	1.33	1.59	1.33	1.59
CO2e		13378.52	15970.61		13378.52	15970.61		13391.06	15985.58		13611.89	16369.22	13712.44	16369.22

1) Carbon Dioxide: Emission factors from AP-42 (3/04), Table 11.1-7. For propane, the EF for natural gas combustion was applied. EFs are expressed in pounds of CO2 per ton of HMA produced.

2) Methane: Emission factors from AP-42 (3/04), Table 11.1-8. For propane, the EF for natural gas combustion was applied. EFs are expressed in pounds of methane per ton of HMA produced.

3) N2O: For #2 diesel, emission factor from AP-42 (5/10), Table 1.3-8; EF expressed in pounds of N2O per 1000 gallons. For RFO, the EF for #2 diesel was applied. For natural gas, EF from AP-42 (7/98), Table 1.4-2, uncontrolled; EF expressed in pounds of N2O per MMSCF. For propane, Ef from AP-42 (7/08), Table 1.5-1; EF expressed in lb N2O per 1000 gallons.

4) CO2e: The sum of CO2, methane, and N2O expressed as carbon dioxide equivalent. A global warming potential of 21 was applied to methane. A GWP of 310 was applied to N2O.

Potential To Emit - HAPs

HAP	RFO			#2 Diesel			Nat. Gas			Propane			Max lb/hr	Max T/yr
	EF	lb/hr	T/yr	EF	lb/hr	T/yr	EF	lb/hr	T/yr	EF	lb/hr	T/yr		
Acenaphthene[2]	1.40E-06	5.60E-04	6.69E-04	1.40E-06	5.60E-04	6.69E-04	1.40E-06	5.60E-04	6.69E-04	1.40E-06	5.60E-04	6.69E-04	5.60E-04	0.001
Acenaphthylene[2]	2.20E-05	8.80E-03	1.05E-02	2.20E-05	8.80E-03	1.05E-02	8.60E-06	3.44E-03	4.11E-03	8.60E-06	3.44E-03	4.11E-03	8.80E-03	0.011
Acetaldehyde	1.30E-03	5.20E-01	6.21E-01		0.00E+00	0.00E+00		0.00E+00	0.00E+00		0.00E+00	0.00E+00	5.20E-01	0.621
Acrolein	2.60E-05	1.04E-02	1.24E-02		0.00E+00	0.00E+00		0.00E+00	0.00E+00		0.00E+00	0.00E+00	1.04E-02	0.012
Antimony	1.80E-07	7.20E-05	8.60E-05	1.80E-07	7.20E-05	8.60E-05	1.80E-07	7.20E-05	8.60E-05	1.80E-07	7.20E-05	8.60E-05	7.20E-05	0.000
Anthracene[2]	3.10E-06	1.24E-03	1.48E-03	3.10E-06	1.24E-03	1.48E-03	2.20E-07	8.80E-05	1.05E-04	2.20E-07	8.80E-05	1.05E-04	1.24E-03	0.001
Arsenic	5.60E-07	2.24E-04	2.67E-04	5.60E-07	2.24E-04	2.67E-04	5.60E-07	2.24E-04	2.67E-04	5.60E-07	2.24E-04	2.67E-04	2.24E-04	0.000
Benzene	3.90E-04	1.56E-01	1.86E-01	3.90E-04	1.56E-01	1.86E-01	3.90E-04	1.56E-01	1.86E-01	3.90E-04	1.56E-01	1.86E-01	1.56E-01	0.186
Benzo(a)anthracene[2]	2.10E-07	8.40E-05	1.00E-04	2.10E-07	8.40E-05	1.00E-04	2.10E-07	8.40E-05	1.00E-04	2.10E-07	8.40E-05	1.00E-04	8.40E-05	0.000
Benzo(a)pyrene[2]	9.80E-09	3.92E-06	4.68E-06	9.80E-09	3.92E-06	4.68E-06	9.80E-09	3.92E-06	4.68E-06	9.80E-09	3.92E-06	4.68E-06	3.92E-06	0.000
Benzo(b)fluoranthene[2]	1.00E-07	4.00E-05	4.78E-05	1.00E-07	4.00E-05	4.78E-05	1.00E-07	4.00E-05	4.78E-05	1.00E-07	4.00E-05	4.78E-05	4.00E-05	0.000
Benzo(e)pyrene[2]	1.10E-07	4.40E-05	5.25E-05	1.10E-07	4.40E-05	5.25E-05	1.10E-07	4.40E-05	5.25E-05	1.10E-07	4.40E-05	5.25E-05	4.40E-05	0.000
Benzo(g,h,i)perylene[2]	4.00E-08	1.60E-05	1.91E-05	4.00E-08	1.60E-05	1.91E-05	4.00E-08	1.60E-05	1.91E-05	4.00E-08	1.60E-05	1.91E-05	1.60E-05	0.000
Benzo(k)fluoranthene[2]	4.10E-08	1.64E-05	1.96E-05	4.10E-08	1.64E-05	1.96E-05	4.10E-08	1.64E-05	1.96E-05	4.10E-08	1.64E-05	1.96E-05	1.64E-05	0.000
Beryllium	0.00E+00	0.00E+00	0.00E+00	0.00E+00	0.00E+00	0.00E+00	0.00E+00	0.00E+00	0.00E+00	0.00E+00	0.00E+00	0.00E+00	0.00E+00	0.000
1,3-Butadiene		0.00E+00	0.00E+00		0.00E+00	0.00E+00		0.00E+00	0.00E+00		0.00E+00	0.00E+00	0.00E+00	0.000
Cadmium	4.10E-07	1.64E-04	1.96E-04	4.10E-07	1.64E-04	1.96E-04	4.10E-07	1.64E-04	1.96E-04	4.10E-07	1.64E-04	1.96E-04	1.64E-04	0.000
Carbon Disulfide		0.00E+00	0.00E+00		0.00E+00	0.00E+00		0.00E+00	0.00E+00		0.00E+00	0.00E+00	0.00E+00	0.000
Chromium	5.50E-06	2.20E-03	2.63E-03	5.50E-06	2.20E-03	2.63E-03	5.50E-06	2.20E-03	2.63E-03	5.50E-06	2.20E-03	2.63E-03	2.20E-03	0.003
Hexavalent Chromium	4.50E-07	1.80E-04	2.15E-04	4.50E-07	1.80E-04	2.15E-04	4.50E-07	1.80E-04	2.15E-04	4.50E-07	1.80E-04	2.15E-04	1.80E-04	0.000
Chrysene[2]	1.80E-07	7.20E-05	8.60E-05	1.80E-07	7.20E-05	8.60E-05	1.80E-07	7.20E-05	8.60E-05	1.80E-07	7.20E-05	8.60E-05	7.20E-05	0.000
Cobalt	2.60E-08	1.04E-05	1.24E-05	2.60E-08	1.04E-05	1.24E-05	2.60E-08	1.04E-05	1.24E-05	2.60E-08	1.04E-05	1.24E-05	1.04E-05	0.000
Cumene		0.00E+00	0.00E+00		0.00E+00	0.00E+00		0.00E+00	0.00E+00		0.00E+00	0.00E+00	0.00E+00	0.000
Dibenzo(a,h)anthracene[2]		0.00E+00	0.00E+00		0.00E+00	0.00E+00		0.00E+00	0.00E+00		0.00E+00	0.00E+00	0.00E+00	0.000
Dichlorobenzene		0.00E+00	0.00E+00		0.00E+00	0.00E+00		0.00E+00	0.00E+00		0.00E+00	0.00E+00	0.00E+00	0.000
Ethyl Benzene	2.40E-04	9.60E-02	1.15E-01	2.40E-04	9.60E-02	1.15E-01	2.40E-04	9.60E-02	1.15E-01	2.40E-04	9.60E-02	1.15E-01	9.60E-02	0.115
Fluoranthene[2]	6.10E-07	2.44E-04	2.91E-04	6.10E-07	2.44E-04	2.91E-04	6.10E-07	2.44E-04	2.91E-04	6.10E-07	2.44E-04	2.91E-04	2.44E-04	0.000
Fluorene[2]	1.10E-05	4.40E-03	5.25E-03	1.10E-05	4.40E-03	5.25E-03	3.80E-06	1.52E-03	1.81E-03	3.80E-06	1.52E-03	1.81E-03	4.40E-03	0.005
Formaldehyde	3.10E-03	1.24E+00	1.48E+00	3.10E-03	1.24E+00	1.48E+00	3.10E-03	1.24E+00	1.48E+00	3.10E-03	1.24E+00	1.48E+00	1.24E+00	1.480
Hexane	9.20E-04	3.68E-01	4.39E-01	9.20E-04	3.68E-01	4.39E-01	9.20E-04	3.68E-01	4.39E-01	9.20E-04	3.68E-01	4.39E-01	3.68E-01	0.439
HCl	2.10E-04	8.40E-02	1.00E-01		0.00E+00	0.00E+00		0.00E+00	0.00E+00		0.00E+00	0.00E+00	8.40E-02	0.100
Indeno(1,2,3-cd)pyrene[2]	7.00E-09	2.80E-06	3.34E-06	7.00E-09	2.80E-06	3.34E-06	7.00E-09	2.80E-06	3.34E-06	7.00E-09	2.80E-06	3.34E-06	2.80E-06	0.000
Lead	1.50E-05	6.00E-03	7.16E-03	1.50E-05	6.00E-03	7.16E-03	6.20E-07	2.48E-04	2.96E-04	6.20E-07	2.48E-04	2.96E-04	6.00E-03	0.007
Manganese	7.70E-06	3.08E-03	3.68E-03	7.70E-06	3.08E-03	3.68E-03	7.70E-06	3.08E-03	3.68E-03	7.70E-06	3.08E-03	3.68E-03	3.08E-03	0.004
Mercury	2.60E-06	1.04E-03	1.24E-03	2.60E-06	1.04E-03	1.24E-03	2.40E-07	9.60E-05	1.15E-04	2.40E-07	9.60E-05	1.15E-04	1.04E-03	0.001
Methyl Chloroform	4.80E-05	1.92E-02	2.29E-02	4.80E-05	1.92E-02	2.29E-02	4.80E-05	1.92E-02	2.29E-02	4.80E-05	1.92E-02	2.29E-02	1.92E-02	0.023
Methyl Ethyl Ketone	2.00E-05	8.00E-03	9.55E-03		0.00E+00	0.00E+00		0.00E+00	0.00E+00		0.00E+00	0.00E+00	8.00E-03	0.010
2-Methylnaphthalene[2]	1.70E-04	6.80E-02	8.12E-02	1.70E-04	6.80E-02	8.12E-02	7.40E-05	2.96E-02	3.53E-02	7.40E-05	2.96E-02	3.53E-02	6.80E-02	0.081
3-Methylchloranthrene[2]		0.00E+00	0.00E+00		0.00E+00	0.00E+00		0.00E+00	0.00E+00		0.00E+00	0.00E+00	0.00E+00	0.000
Naphthalene[2]	6.50E-04	2.60E-01	3.10E-01	6.50E-04	2.60E-01	3.10E-01	9.00E-05	3.60E-02	4.30E-02	9.00E-05	3.60E-02	4.30E-02	2.60E-01	0.310
Nickel	6.30E-05	2.52E-02	3.01E-02	6.30E-05	2.52E-02	3.01E-02	6.30E-05	2.52E-02	3.01E-02	6.30E-05	2.52E-02	3.01E-02	2.52E-02	0.030
Pentane		0.00E+00	0.00E+00		0.00E+00	0.00E+00		0.00E+00	0.00E+00		0.00E+00	0.00E+00	0.00E+00	0.000
Perylene[2]	8.80E-09	3.52E-06	4.20E-06	8.80E-09	3.52E-06	4.20E-06	8.80E-09	3.52E-06	4.20E-06	8.80E-09	3.52E-06	4.20E-06	3.52E-06	0.000
Phenanthrene[2]	2.30E-05	9.20E-03	1.10E-02	2.30E-05	9.20E-03	1.10E-02	7.60E-06	3.04E-03	3.63E-03	7.60E-06	3.04E-03	3.63E-03	9.20E-03	0.011
Phosphorus	2.80E-05	1.12E-02	1.34E-02	2.80E-05	1.12E-02	1.34E-02	2.80E-05	1.12E-02	1.34E-02	2.80E-05	1.12E-02	1.34E-02	1.12E-02	0.013
POM (see below)													3.54E-01	0.422
Propionaldehyde	1.30E-04	5.20E-02	6.21E-02		0.00E+00	0.00E+00		0.00E+00	0.00E+00		0.00E+00	0.00E+00	5.20E-02	0.062
Pyrene[2]	3.00E-06	1.20E-03	1.43E-03	3.00E-06	1.20E-03	1.43E-03	5.40E-07	2.16E-04	2.58E-04	5.40E-07	2.16E-04	2.58E-04	1.20E-03	0.001
Quinone	1.60E-04	6.40E-02	7.64E-02		0.00E+00	0.00E+00		0.00E+00	0.00E+00		0.00E+00	0.00E+00	6.40E-02	0.076
Selenium	3.50E-07	1.40E-04	1.67E-04	3.50E-07	1.40E-04	1.67E-04	3.50E-07	1.40E-04	1.67E-04	3.50E-07	1.40E-04	1.67E-04	1.40E-04	0.000
Styrene		0.00E+00	0.00E+00		0.00E+00	0.00E+00		0.00E+00	0.00E+00		0.00E+00	0.00E+00	0.00E+00	0.000
2,3,7,8-TCDD	2.10E-13	8.40E-11	1.00E-10	2.10E-13	8.40E-11	1.00E-10		0.00E+00	0.00E+00		0.00E+00	0.00E+00	8.40E-11	0.000
Toluene	2.90E-03	1.16E+00	1.38E+00	2.90E-03	1.16E+00	1.38E+00	1.50E-04	6.00E-02	7.16E-02	1.50E-04	6.00E-02	7.16E-02	1.16E+00	1.385
Total PCDD/PCDF[3]	1.2E-10	4.8E-08	5.7E-08	1.2E-10	4.8E-08	5.7E-08							4.80E-08	0.000
Xylene	2.00E-04	8.00E-02	9.55E-02	2.00E-04	8.00E-02	9.55E-02	2.00E-04	8.00E-02	9.55E-02	2.00E-04	8.00E-02	9.55E-02	8.00E-02	0.096
TOTALS:			5.09			4.21			2.55			2.55	4.26	5.09

1) Metals: Emission factors from AP-42 (3/04), Table 11.1-12, for fabric filter. EF expressed in pounds of pollutant per ton of HMA produced.

2) Organic Pollutants: Emission factors from AP-42 (3/04), Table 11.1-10., for fabric filter. For propane, the EFs for natural gas have been applied. EF for HCl from RFO combustion from AP-42 (3/04), Table 11.1-8. EFs expressed in pounds of pollutant per ton of HMA produced.

3) POM: Maximum PTE estimates for POM based on polycyclic organic matter mixture as defined by 1900 CAA Amendments. Compounds included in the mixture are denoted in the table. To avoid double counting, the total, maximum PTE estimates do not include POM (i.e., individual compounds are summed separately) or 2, 3, 7, 8-TCDD (included in Total PCDD/PCDF).

Emission Unit:	Asphalt Tank Heater
Manufacturer/Model:	Gencor, Model HYCGO-100
Burner capacity (MMBTU/hr):	0.5
Fuel Type(s):	RFO, #2 Diesel, natural gas, or propane
Daily Hours of Operation (hr/d)	24
Annual Hours of Operation (hr/yr):	8760

Control Equipment:	None

RFO and Diesel (MMBTU/1000 gallons):	140	(AP-42, App A)
Nat. gas (BTU/scf):	1020	(AP-42, Table 1.4-1, footnote (a))
Propane (MMBTU/1000 gallons):	91.5	(AP-42, Table 1.5-1, footnote (a))
Propane (BTU/scf):	2504	(http://www.engineeringtoolbox.com/fuel-gases-combustion-values-d_510.html)

Potential To Emit - Criteria Pollutants

Criteria Pollutant	RFO			#2 Diesel			Nat. Gas			Propane			Max lb/hr	Max T/yr	Max 24hr Ave lb/hr	Max Annual Ave lb/hr
	EF	lb/hr	T/yr	EF	lb/hr	T/yr	EF	lb/hr	T/yr	EF	lb/hr	T/yr				
CO	2.10	0.0075	0.03	1.20	0.0043	0.02	8.90	0.0044	0.02	7.50	0.041	0.18	0.04	0.18	0.041	0.041
CO2e		78.88	345.47		100.30	439.33		98.40	430.98		69.85	305.96	100.30	439.33	100.304	100.304
NOx	16.00	0.0571	0.25	20.00	0.071	0.31	100.00	0.049	0.215	13.00	0.071	0.31	0.07	0.31	0.071	0.071
SO2	53.50	0.1911	0.84	0.213	0.001	0.003	0.60	0.0003	0.001	1.50	0.008	0.04	0.19	0.84	0.191	0.191
PM	56.10	0.2004	0.88	2.00	0.007	0.03	7.60	0.0037	0.016	0.70	0.004	0.02	0.20	0.88	0.200	0.200
PM10	48.45	0.1730357	0.76	1.00	0.004	0.02	7.60	0.0037	0.016	0.70	0.004	0.02	0.173	0.76	0.173	0.173
PM2.5	1.79	0.0063771	0.03	0.25	0.001	0.004	7.60	0.0037	0.016	0.70	0.004	0.02	0.006	0.03	0.006	0.006
VOC	1.00	0.0036	0.02	0.25	0.001	0.004	5.50	0.0027	0.012	1.00	0.005	0.02	0.01	0.02	0.005	0.005
Lead	0.50	0.0018	0.01	9.0E-06	4.5E-06	1.97E-05	5.0E-04	0.0000	1.07E-06	5.0E-04	0.000	4.37E-07	0.00	0.01	0.002	0.002

Emission Factor Information:

1) Carbon Monoxide: For diesel and natural gas, emission factors from AP-42 (3/04), Table 11.1-13. For RFO, EF from AP-42 (10/96), Table 1.11-2, for Atomizing burner. For propane, EF from AP-42 (7/08), Table 1.5-1,from AP-42 (7/08), Table 1.5-1, for propane combustion in commercial boilers. EFs for RFO, diesel, and propane are expressed in pounds of CO per 1000 gallons of fuel fired. EF for natural gas expressed in pounds of CO per MMscf of gas fired.

2) Carbon Dioxide Equivalent: Refer to Greenhouse Gases table for calculation methodology.

3) Nitrogen Oxides: For diesel, emission factor from AP-42 (5/10), Table 1.3-1, for Boilers < 100 MMBTU/hr. For RFO, EF from AP-42 (10/96), Table 1.11-2, for Atomizing burner. For natural gas, EF from AP-42 (7/98), Table 1.4-1, for uncontrolled, small boilers. EF for propane from AP-42 (7/08), Table 1.5-1, for propane combustion in commercial boilers. EFs for RFO, diesel, and propane expressed in pounds of NOx per 1000 gallons. EF for natural gas expressed in pounds of NOx per MMscf.

4) Sulfur Dioxide: For diesel, emission factor from AP-42 (5/10), Table 1.3-1, for Boilers < 100 MMBTU/hr; sulfur content is 0.0015%. For RFO, EF from AP-42 (10/96), Table 1.11-2, for Atomizing burner; sulfur content is 0.5%, per information from vendor. For natural gas, EF from AP-42 (7/98), Table 1.4-2. For propane, EF from AP-42 (7/08), Table 1.5-1, for propane combustion in commercial boilers; sulfur content assumed to be ≤15 gr/100 scf (Gas Processors Association Engineering Data Book, 1972). EFs for RFO, diesel, and propane expressed in pounds of SO2 per 1000 gallons. EF for natural gas expressed in pounds of SO2 per MMscf.

5) Particulate Matter: For diesel, emission factor from AP-42 (5/10), Table 1.3-6. For RFO, EF from AP-42 (10/96), Table 1.11-1, for Atomizing burner; 0.85% ash content, per info from vendor. EF for natural gas from AP-42 (7/98), Table 1.4-2. EF for propane from AP-42 (7/08), Table 1.5-1, for propane combustion in commercial boilers. EFs for RFO, diesel, and propane expressed in pounds of PM per 1000 gallons. EF for natural gas expressed in pounds of PM per MMscf.

6) PM-10: For diesel, emission factor from AP-42 (5/10), Table 1.3-6. For RFO, EF from AP-42 (10/96), Table 1.11-1, for Atomizing burner; 0.85% ash content, per info from vendor. EF for natural gas from AP-42 (7/98), Table 1.4-2, footnote c). EF for propane from AP-42 (7/08), Table 1.5-1, for propane combustion in commercial boilers, per footnote d), all PM assumed to be PM-10. EFs for RFO, diesel, and propane expressed in pounds of PM per 1000 gallons. EF for natural gas expressed in pounds of PM per MMscf.

7) PM-2.5: For diesel, emission factor from AP-42 (5/10), Table 1.3-6. For RFO, EF from AP-42 (5/10), Table 1.3-7, for Residual Oil, assuming No. 6 oil with a sulfur content of 0.5%, per vendor. EF for natural gas from AP-42 (7/98), Table 1.4-2, footnote c). EF for propane from AP-42 (7/08), Table 1.5-1, for propane combustion in commercial boilers, all PM assumed to be PM-2.5. EFs for RFO, diesel, and propane expressed in pounds of PM per 1000 gallons. EF for natural gas expressed in pounds of PM per MMscf.

8) VOC: For diesel, emission factor from AP-42 (5/10), Table 1.3-3, for TOC from Industrial boilers. For RFO, EF from AP-42 (10/96), Table 1.11-3, for TOC from Atomizing burner. For natural gas, EF from AP-42 (7/98), Table 1.4-2. For propane, EF from AP-42 (7/08), Table 1.5-1, for TOC from commercial boilers. EFs for RFO, diesel, and propane expressed in pounds of VOC per 1000 gallons. EF for natural gas expressed in pounds of VOC per MMscf of gas fired.

9) Lead: For diesel, emission factor from AP-42 (5/10), Table 1.3-10. For RFO, EF from AP-42 (10/96), Table 1.11-1, for Atomizing burner, 0.5% lead, per vendor's specifications. EF for natural gas from AP-42 (7/98), Table 1.4-2. For propane, EF for natural gas was applied. EF for RFO expressed in pounds of Pb per 1000 gallons. EF for diesel expressed in pounds Pb per MMBTU. EFs for natural gas and propane expressed in pounds of Pb per MMscf.

Potential To Emit - Non-Carcinogenic TAPs

Non-Carcinogen TAP	RFO			#2 Diesel			Nat. Gas			Propane			Max lb/hr	Max T/yr	Max 24hr Ave lb/hr	Max Annual Ave lb/hr
	EF	lb/hr	T/yr	EF	lb/hr	T/yr	EF	lb/hr	T/yr	EF	lb/hr	T/yr				
Antimony	4.50E-03	1.61E-05	7.04E-05										1.61E-05	7.04E-05	1.61E-05	1.61E-05
Barium							4.40E-03	2.16E-06	9.45E-06	4.40E-03	8.79E-07	3.85E-06	2.16E-06	9.45E-06	2.16E-06	2.16E-06
Chromium	1.80E-01	6.43E-04	2.82E-03	3.00E-06	1.50E-06	6.57E-06	1.40E-03	6.86E-07	3.01E-06	1.40E-03	2.80E-07	1.22E-06	6.43E-04	2.82E-03	6.43E-04	6.43E-04
Cobalt	5.20E-03	1.86E-05	8.13E-05				8.40E-05	4.12E-08	1.80E-07	8.40E-05	1.68E-08	7.35E-08	1.86E-05	8.13E-05	1.86E-05	1.86E-05
Copper				6.00E-06	3.00E-06	1.31E-05	8.50E-04	4.17E-07	1.83E-06	8.50E-04	1.70E-07	7.43E-07	3.00E-06	1.31E-05	3.00E-06	3.00E-06
Dichlorobenzene	8.00E-07	2.9E-09	1.25E-08				1.20E-03	5.88E-07	2.58E-06	1.20E-03	2.40E-07	1.05E-06	5.88E-07	2.58E-06	5.88E-07	5.88E-07
Hexane							1.8	8.82E-04	3.86E-03	1.8	3.59E-04	1.57E-03	8.82E-04	3.86E-03	8.82E-04	8.82E-04
Hydrochloric Acid	6.6	2.4E-02	1.03E-01			0.00E+00			0.00E+00			0.00E+00	2.36E-02	1.03E-01	2.36E-02	2.36E-02
Manganese	5.00E-02	1.79E-04	7.82E-04	6.00E-06	3.00E-06	1.31E-05	3.80E-04	1.86E-07	8.16E-07	3.80E-04	7.59E-08	3.32E-07	1.79E-04	7.82E-04	1.79E-04	1.79E-04
Mercury				3.00E-06	1.50E-06	6.57E-06	2.60E-04	1.27E-07	5.58E-07	2.60E-04	5.19E-08	2.27E-07	1.50E-06	6.57E-06	1.50E-06	1.50E-06
Molybdenum							1.10E-03	5.39E-07	2.36E-06	1.10E-03	2.20E-07	9.62E-07	5.39E-07	2.36E-06	5.39E-07	5.39E-07
Naphthalene	9.20E-05	3.3E-07	1.4E-06	1.70E-02	6.1E-05	2.7E-04	6.10E-04	2.99E-07	1.31E-06	6.10E-04	1.22E-07	5.34E-07	6.07E-05	2.66E-04	6.07E-05	6.07E-05
Pentane							2.60E+00	1.27E-03	5.58E-03	2.60E+00	5.19E-04	2.27E-03	1.27E-03	5.58E-03	1.27E-03	1.27E-03
Phenol	2.80E-05	1.0E-07	4.4E-07										1.00E-07	4.38E-07	1.00E-07	1.00E-07
Selenium				1.50E-05	7.50E-06	3.29E-05	2.40E-05	1.18E-08	5.15E-08	2.40E-05	4.79E-09	2.10E-08	7.50E-06	3.29E-05	7.50E-06	7.50E-06
Toluene							3.40E-03	1.67E-06	7.30E-06	3.40E-03	6.79E-07	2.97E-06	1.67E-06	7.30E-06	1.67E-06	1.67E-06
Vanadium							2.30E-03	1.13E-06	4.94E-06	2.30E-03	4.59E-07	2.01E-06	1.13E-06	4.94E-06	1.13E-06	1.13E-06
Zinc				4.00E-06	2.00E-06	8.76E-06	2.90E-02	1.42E-05	6.23E-05	2.90E-02	5.79E-06	2.54E-05	1.42E-05	6.23E-05	1.42E-05	1.42E-05
TOTALS:			1.07E-01			3.47E-04			9.54E-03			3.89E-03	0.027	0.117		

Potential To Emit - Carcinogenic TAPs

Carcinogen TAPs	RFO			#2 Diesel			Nat. Gas			Propane			Max lb/hr	Max T/yr	Max 24hr Ave lb/hr	Max Annual Ave lb/hr
	EF	lb/hr	T/yr	EF	lb/hr	T/yr	EF	lb/hr	T/yr	EF	lb/hr	T/yr				
Acenaphthene				5.30E-04	1.9E-06	8.3E-06	1.80E-06	8.82E-10	3.86E-09	1.80E-06	3.59E-10	1.57E-09	1.89E-06	8.29E-06	1.89E-06	1.89E-06
Acenaphthylene				2.00E-04	7.1E-07	3.1E-06	1.80E-06	8.82E-10	3.86E-09	1.80E-06	3.59E-10	1.57E-09	7.14E-07	3.13E-06	7.14E-07	7.14E-07
Anthracene	1.00E-04	3.6E-07	1.6E-06	1.80E-04	6.4E-07	2.8E-06	2.40E-06	1.18E-09	5.15E-09	2.40E-06	4.79E-10	2.10E-09	6.43E-07	2.82E-06	6.43E-07	6.43E-07
Arsenic	6.00E-02	2.14E-04	9.39E-04	4.00E-06	2.00E-06	8.76E-06	2.00E-04	9.80E-08	4.29E-07	2.00E-04	3.99E-08	1.75E-07	2.14E-04	9.39E-04	2.14E-04	2.14E-04
Benzene							2.10E-03	1.03E-06	4.51E-06	2.10E-03	4.19E-07	1.84E-06	1.03E-06	4.51E-06	1.03E-06	1.03E-06
Benzo(a)pyrene	4.00E-03	1.4E-05	6.3E-05			0.00E+00	1.20E-06	5.88E-10	2.58E-09	1.20E-06	2.40E-10	1.05E-09	1.43E-05	6.26E-05	1.43E-05	1.43E-05
Benzo(g,h,i)perylene							1.20E-06	5.88E-10	2.58E-09	1.20E-06	2.40E-10	1.05E-09	5.88E-10	2.58E-09	5.88E-10	5.88E-10
Beryllium	1.80E-03	6.43E-06	2.82E-05	3.00E-06	1.50E-06	6.57E-06	1.20E-05	5.88E-09	2.58E-08	1.20E-05	2.40E-09	1.05E-08	6.43E-06	2.82E-05	6.43E-06	6.43E-06
Bis(2-ethylhexyl)phthalate	2.20E-03	7.9E-06	3.4E-05										7.86E-06	3.44E-05	7.86E-06	7.86E-06
Cadmium	1.20E-02	4.29E-05	1.88E-04	3.00E-06	1.50E-06	6.57E-06	1.10E-03	5.39E-07	2.36E-06	1.10E-03	2.20E-07	9.62E-07	4.29E-05	1.88E-04	4.29E-05	4.29E-05
Dioxin/Furans (see below)													8.21E-10	3.60E-09		1.36E-12
Fluoranthene				4.40E-05	1.6E-07	6.9E-07	3.00E-06	1.47E-09	6.44E-09	3.00E-06	5.99E-10	2.62E-09	1.57E-07	6.88E-07	1.57E-07	1.57E-07
Fluorene				3.20E-05	1.1E-07	5.0E-07	2.80E-06	1.37E-09	6.01E-09	2.80E-06	5.59E-10	2.45E-09	1.14E-07	5.01E-07	1.14E-07	1.14E-07
Formaldehyde				6.10E-02	2.2E-04	9.5E-04	7.50E-02	3.68E-05	1.61E-04	7.50E-02	1.50E-05	6.56E-05	2.18E-04	9.54E-04	2.18E-04	2.18E-04
3-Methylchloranthrene							1.80E-06	8.82E-10	3.86E-09	1.80E-06	3.59E-10	1.57E-09	8.82E-10	3.86E-09	8.82E-10	8.82E-10
2-Methylnaphthalene							2.40E-05	1.18E-08	5.15E-08	2.40E-05	4.79E-09	2.10E-08	1.18E-08	5.15E-08	1.18E-08	1.18E-08
Naphthalene	9.20E-05	3.3E-07	1.4E-06	1.70E-02	6.1E-05	2.7E-04	6.10E-04	2.99E-07	1.31E-06	6.10E-04	1.22E-07	5.34E-07	6.07E-05	2.66E-04	6.07E-05	6.07E-05
Nickel	1.60E-01	5.71E-04	2.50E-03	3.00E-06	1.50E-06	6.57E-06	2.10E-03	1.03E-06	4.51E-06	2.10E-03	4.19E-07	1.84E-06	5.71E-04	2.50E-03	5.71E-04	5.71E-04
Phenanthrene	1.00E-04	3.6E-07	1.6E-06	4.90E-03	1.8E-05	7.7E-05	1.70E-05	8.33E-09	3.65E-08	1.70E-05	3.33E-09	1.49E-08	1.75E-05	7.67E-05	1.75E-05	1.75E-05
POM (see below)	1.20E-02	4.3E-05	1.9E-04	3.30E-03	1.2E-05	5.2E-05	1.14E-05	5.59E-09	2.45E-08	1.14E-05	2.28E-09	9.97E-09	4.29E-05	1.88E-04	4.29E-05	4.29E-05
Pyrene	8.30E-06	3.0E-08	1.3E-07	3.20E-05	1.1E-07	5.0E-07	5.00E-06	2.45E-09	1.07E-08	5.00E-06	9.98E-10	4.37E-09	1.14E-07	5.01E-07	1.14E-07	1.14E-07
TOTALS:			3.95E-03			1.39E-03			1.74E-04			7.10E-05	0.001	0.005		

Emission Factor Information:

1) Metals: For diesel, emission factors from AP-42 (5/10), Table 1.3-10. For RFO, EFs from AP-42 (10/96), Table 1.11-4, for Atomizing burner. For natural gas, EFs from AP-42 (7/98), Table 1.4-4. For propane, EFs for nat. gas were applied. EFs for diesel expressed in pounds of pollutant per MMBTU. EFs for RFO expressed in pounds of pollutant per 1000 gallons. EFs for natural gas and propane expressed in pounds of pollutant per MMscf.

2) Organic Pollutants: For diesel, emission factors from AP-42 (5/10), Table 1.3-8, for Distillate oil, and AP-42 (3/04), Table 11.1-13. for Hot oil system fired with No. 2 fuel oil. For diesel, EF for POM taken from Table 1.3-8 rather than summing PAHs, as this is the more conservative emissions estimate. For RFO, EFs from AP-42 (10/96), Table 1.11-5, for Atomizing burner (i.e., except for bis(2-ethylhexyl)phthalate, dichlorobenzene, benz(a)anthracene, and benzo(a)pyrene which rely on values for Vaporizing burner). For HCl from RFO, EF from AP-42 (10/96), Table 1.11-3; 0.1% weight used, per vendor information (i.e., <1000ppm for all halogens). For natural gas, EFs from AP-42 (7/98), Table 1.4-3. For propane, EFs for nat. gas were applied. EFs for diesel and RFO expressed in pounds of pollutant per 1000 gallons. EFs for natural gas and propane expressed in pounds of pollutant per MMscf.

3) Dioxin/Furans: Max Annual Ave value represents emissions from all dioxin/furan mixtures, expressed as equivalent emissions of 2,3,7,8-TCDD, per IDAPA 58.01.01.586. Refer to Dioxin/Furan Mixture table for calculation methodology.

4) POM: Emission factors for POM based on polyaromatic hydrocarbon mixture identified in IDAPA 58.01.01.586. Refer to Polycyclic Organic Matter Mixture table for calculation methodology.

Polycyclic Organic Matter Mixture

Polycyclic Organic Mattar (POM)	RFO			#2 Diesel			Nat. Gas			Propane		
	EF	lb/hr	T/yr	EF	lb/hr	T/yr	EF	lb/hr	T/yr	EF	lb/hr	T/yr
Benzo(a)anthracene	4.00E-03	1.43E-05	6.26E-05			0.00E+00	1.80E-06	8.82E-10	3.86E-09	1.80E-06	3.59E-10	1.57E-09
Benzo(b)fluoranthene			0.00E+00	1.00E-04	3.6E-07	1.6E-06	1.80E-06	8.82E-10	3.86E-09	1.80E-06	3.59E-10	1.57E-09
Benzo(k)fluoranthene			0.00E+00			0.00E+00	1.80E-06	8.82E-10	3.86E-09	1.80E-06	3.59E-10	1.57E-09
Benzo(a)pyrene	4.00E-03	1.43E-05	6.26E-05			0.00E+00	1.20E-06	5.88E-10	2.58E-09	1.20E-06	2.40E-10	1.05E-09
Chrysene	4.00E-03	1.43E-05	6.26E-05			0.00E+00	1.80E-06	8.82E-10	3.86E-09	1.80E-06	3.59E-10	1.57E-09
Dibenzo(a,h)anthracene			0.00E+00			0.00E+00	1.20E-06	5.88E-10	2.58E-09	1.20E-06	2.40E-10	1.05E-09
Indeno(1,2,3-cd)pyrene			0.00E+00			0.00E+00	1.80E-06	8.82E-10	3.86E-09	1.80E-06	3.59E-10	1.57E-09
TOTALS:	1.20E-02		1.88E-04	3.30E-03		1.56E-06	1.14E-05		2.45E-08	1.14E-05		9.97E-09

Dioxin/Furan Mixture

Dioxin/Furan	RFO			#2 Diesel			Max lb/hr	Max T/yr	TEF	Adjusted Max Annual Ave lb/hr
	EF	lb/hr	T/yr	EF	lb/hr	T/yr				
1,2,3,4,7,8-HxCDD				6.90E-10	2.46E-12	1.08E-11	2.46E-12	1.08E-11	0.10	2.46E-13
1,2,3,7,8,9-HxCDD				7.60E-10	2.71E-12	1.19E-11	2.71E-12	1.19E-11	0.10	2.71E-13
HxCDD				6.20E-09	2.21E-11	9.70E-11	2.21E-11	9.70E-11		
1,2,3,4,6,7,8-Hp-CDD				1.50E-08	5.36E-11	2.35E-10	5.36E-11	2.35E-10	0.01	5.36E-13
HpCDD				2.00E-08	7.14E-11	3.13E-10	7.14E-11	3.13E-10		
Octa CDD				1.60E-07	5.71E-10	2.50E-09	5.71E-10	2.50E-09	0.0003	1.71E-13
Total PCDD				2.00E-07	7.14E-10	3.13E-09	7.14E-10	3.13E-09		
TCDF				3.30E-09	1.18E-11	5.16E-11	1.18E-11	5.16E-11		
PeCDF				4.80E-10	1.71E-12	7.51E-12	1.71E-12	7.51E-12		
HxCDF				2.00E-09	7.14E-12	3.13E-11	7.14E-12	3.13E-11		
1,2,3,4,6,7,8-HpCDF				3.50E-09	1.25E-11	5.48E-11	1.25E-11	5.48E-11	0.01	1.25E-13
HpCDF				9.70E-09	3.46E-11	1.52E-10	3.46E-11	1.52E-10		
Octa CDF				1.20E-08	4.29E-11	1.88E-10	4.29E-11	1.88E-10	0.0003	1.29E-14
Total PCDF				3.10E-08	1.11E-10	4.85E-10	1.11E-10	4.85E-10		
Total PCDD/PCDF				2.30E-07	8.21E-10	3.60E-09	8.21E-10	3.60E-09		
							TOTAL ADJUSTED:			1.36E-12

Emission Factor Information:

1) Organic Pollutants:

For diesel, emission factors from AP-42 (5/10), Table 1.3-8, for Distillate oil, and AP-42 (3/04), Table 11.1-13, for Hot oil system fired with No. 2 fuel oil.
For diesel, EF for POM taken from Table 1.3-8 rather than summing PAHs, as this is the more conservative emissions estimate.
For RFO, EFs from AP-42 (10/96), Table 1.11-5, for Atomizing burner (i.e., except for dichlorobeneze, benz(a)anthracene, and benzo(a)pyrene which rely on values for Vaporizing burner). For natural gas, EFs from AP-42 (7/98), Table 1.4-3. For propane, EFs for nat. gas were applied.
EFs for diesel and RFO expressed in pounds of pollutant per 1000 gallons. EFs for natural gas and propane expressed in pounds of pollutant per MMscf.

2) Toxic Equivalency Factors:

2005, Van den Berg, et al, The 2005 World Health Organization Reevaluation of Human and Mammalian Toxic Equivalency Factors for Dioxins and Dioxin-Like Compounds, Toxicological Sciences 93(2), 223-241 (2006). Accessible at http://toxsci.oxfordjournals.org/cgi/reprint/93/2/223. Use of the 2005 WHO toxic equivalency factors (TEFs) is consistent with current EPA recommendations for TRI reporting (72 FR 26544, May 10, 2007). IDAPA 58.01.01.586, TAPs Carcinogenic Increments:
Total of adjusted emission rates are treated as a single TAP (2,3,7,8 TCDD)

Greenhouse Gases

GHG	RFO			#2 Diesel			Nat. Gas			Propane			Max lb/hr	Max T/yr
	EF	lb/hr	T/yr	EF	lb/hr	T/yr	EF	lb/hr	T/yr	EF	lb/hr	T/yr		
CO2	22000.0	78.57	344.14	28000.0	100.00	438.00	2.0E+05	98.04	429.41	12500.0	68.31	299.18	100.00	438.00
Methane	0.216	0.001	0.003	0.216	0.001	0.003	2.3	0.001	0.005	0.2	0.001	0.005	0.001	0.005
N2O	0.260	0.001	0.004	0.260	0.001	0.004	2.2	0.001	0.005	0.9	0.005	0.02	0.005	0.02
CO2e		78.88	345.47		100.30	439.33		98.40	430.98		69.85	305.96	100.30	439.33

1) Carbon Dioxide:

For RFO, EF from AP-42, Table 1.11-3 (10/96), for Atomizing burner. Emission factors for #2 diesel and nat. gas from AP-42 (3/04), Table 11.1-13.
For propane, EF from AP-42 (7/08), Table 1.5-1, for propane combustion in commercial boilers. EFs for RFO, diesel, and propane are expressed in pounds of CO2 per 1000 gallons.
EF for natural gas expressed in pounds of CO2 per MMscf of gas fired.

2) Methane:

For #2 diesel, emission factors from AP-42 (5/10), Table 1.3-3, Commercial/institutional/residential combustors, Distillate oil fired; EF expressed in pounds of methane per 1000 gallons.
For RFO, the EF for #2 diesel was applied. For natural gas, EF from AP-42 (7/98), Table 1.4-2, uncontrolled; EF expressed in pounds of methane per MMSCF.
For propane, EF from AP-42 (7/08), Table 1.5-1; EF expressed in pounds methane per 1000 gallons.

3) N2O:

For #2 diesel, emission factor from AP-42 (5/10), Table 1.3-8; EF expressed in pounds of N2O per 1000 gallons. For RFO, the EF for #2 diesel was applied. For natural gas, EF from AP-42 (7/98), Table 1.4-2, uncontrolled; EF expressed in pounds of N2O per MMSCF. For propane, EF from AP-42 (7/08), Table 1.5-1; EF expressed in lb N2O per 1000 gallons.

4) CO2e:

The sum of CO2, methane, and N2O expressed as carbon dioxide equivalent. A global warming potential of 21 was applied to methane. A GWP of 310 was applied to N2O.

Potential To Emit - HAPs

HAP	RFO			#2 Diesel			Nat. Gas			Propane			Max lb/hr	Max T/yr
	EF	lb/hr	T/yr	EF	lb/hr	T/yr	EF	lb/hr	T/yr	EF	lb/hr	T/yr		
Acenaphthene[1]				5.30E-04	1.9E-06	8.3E-06	1.80E-06	8.82E-10	3.86E-09	1.80E-06	3.59E-10	1.57E-09	1.89E-06	8.29E-06
Acenaphthylene[1]				2.00E-04	7.1E-07	3.1E-06	1.80E-06	8.82E-10	3.86E-09	1.80E-06	3.59E-10	1.57E-09	7.14E-07	3.13E-06
Acetaldehyde		0.0E+00	0.0E+00		0.0E+00	0.0E+00		0.0E+00	0.0E+00		0.0E+00	0.0E+00	0.00E+00	0.00E+00
Acrolein		0.0E+00	0.0E+00		0.0E+00	0.0E+00		0.0E+00	0.0E+00		0.0E+00	0.0E+00	0.00E+00	0.00E+00
Antimony	4.50E-03	1.61E-05	7.04E-05										1.61E-05	7.04E-05
Anthracene[1]	1.00E-04	3.6E-07	1.6E-06	1.80E-04	6.4E-07	2.8E-06	2.40E-06	1.18E-09	5.15E-09	2.40E-06	4.79E-10	2.10E-09	6.43E-07	2.82E-06
Arsenic	6.00E-02	2.14E-04	9.39E-04	4.00E-06	2.00E-06	8.76E-06	2.00E-04	9.80E-08	4.29E-07	2.00E-04	3.99E-08	1.75E-07	2.14E-04	9.39E-04
Benzene							2.10E-03	1.03E-06	4.51E-06	2.10E-03	4.19E-07	1.84E-06	1.03E-06	4.51E-06
Benzo(a)anthracene[1]	4.00E-03	1.4E-05	6.3E-05			0.00E+00	1.80E-06	8.82E-10	3.86E-09	1.80E-06	3.59E-10	1.57E-09	1.43E-05	6.26E-05
Benzo(a)pyrene[1]	4.00E-03	1.4E-05	6.3E-05			0.00E+00	1.20E-06	5.88E-10	2.58E-09	1.20E-06	2.40E-10	1.05E-09	1.43E-05	6.26E-05
Benzo(b)fluoranthene[1]			0.00E+00	1.00E-04	3.6E-07	1.6E-06	1.80E-06	8.82E-10	3.86E-09	1.80E-06	3.59E-10	1.57E-09	3.57E-07	1.56E-06
Benzo(e)pyrene[1]		0.0E+00	0.0E+00		0.0E+00	0.0E+00		0.0E+00	0.0E+00		0.0E+00	0.0E+00	0.00E+00	0.00E+00
Benzo(g,h,i)perylene[1]							1.20E-06	5.88E-10	2.58E-09	1.20E-06	2.40E-10	1.05E-09	5.88E-10	2.58E-09
Benzo(k)fluoranthene[1]			0.00E+00			0.00E+00	1.80E-06	8.82E-10	3.86E-09	1.80E-06	3.59E-10	1.57E-09	8.82E-10	3.86E-09
Beryllium	1.80E-03	6.43E-06	2.82E-05	3.00E-06	1.50E-06	6.57E-06	1.20E-05	5.88E-09	2.58E-08	1.20E-05	2.40E-09	1.05E-08	6.43E-06	2.82E-05
Bis(2-ethylhexyl)phthalate	2.20E-03	7.9E-06	3.4E-05										7.86E-06	3.44E-05
1,3-Butadiene		0.0E+00	0.0E+00		0.0E+00	0.0E+00		0.0E+00	0.0E+00		0.0E+00	0.0E+00	0.00E+00	0.00E+00
Cadmium	1.20E-02	4.29E-05	1.88E-04	3.00E-06	1.50E-06	6.57E-06	1.10E-03	5.39E-07	2.36E-06	1.10E-03	2.20E-07	9.62E-07	4.29E-05	1.88E-04
Carbon Disulfide		0.0E+00	0.0E+00		0.0E+00	0.0E+00		0.0E+00	0.0E+00		0.0E+00	0.0E+00	0.00E+00	0.00E+00
Chromium	1.80E-01	6.43E-04	2.82E-03	3.00E-06	1.50E-06	6.57E-06	1.40E-03	6.86E-07	3.01E-06	1.40E-03	2.80E-07	1.22E-06	6.43E-04	2.82E-03
Hexavalent Chromium		0.0E+00	0.0E+00		0.0E+00	0.0E+00		0.0E+00	0.0E+00		0.0E+00	0.0E+00	0.00E+00	0.00E+00
Chrysene[1]	4.00E-03	1.4E-05	6.3E-05			0.00E+00	1.80E-06	8.82E-10	3.86E-09	1.80E-06	3.59E-10	1.57E-09	1.43E-05	6.26E-05
Cobalt	5.20E-03	1.86E-05	8.13E-05				8.40E-05	4.12E-08	1.80E-07	8.40E-05	1.68E-08	7.35E-08	1.86E-05	8.13E-05
Cumene		0.0E+00	0.0E+00		0.0E+00	0.0E+00		0.0E+00	0.0E+00		0.0E+00	0.0E+00	0.00E+00	0.00E+00
Dibenzo(a,h)anthracene[1]			0.00E+00			0.00E+00	1.20E-06	5.88E-10	2.58E-09	1.20E-06	2.40E-10	1.05E-09	5.88E-10	2.58E-09
Dibutylphthalate	3.40E-05	1.2E-07	5.3E-07										1.21E-07	5.32E-07
Dichlorobenzene	8.00E-07	2.9E-09	1.3E-08				1.20E-03	5.88E-07	2.58E-06	1.20E-03	2.40E-07	1.05E-06	5.88E-07	2.58E-06
Ethyl Benzene		0.0E+00	0.0E+00		0.0E+00	0.0E+00		0.0E+00	0.0E+00		0.0E+00	0.0E+00	0.00E+00	0.00E+00
Fluoranthene[1]				4.40E-05	1.6E-07	6.9E-07	3.00E-06	1.47E-09	6.44E-09	3.00E-06	5.99E-10	2.62E-09	1.57E-07	6.88E-07
Fluorene[1]				3.20E-05	1.1E-07	5.0E-07	2.80E-06	1.37E-09	6.01E-09	2.80E-06	5.59E-10	2.45E-09	1.14E-07	5.01E-07
Formaldehyde				6.10E-02	2.2E-04	9.5E-04	7.50E-02	3.68E-05	1.61E-04	7.50E-02	1.50E-05	6.56E-05	2.18E-04	9.54E-04
Hexane							1.8	8.82E-04	3.86E-03	1.8	3.59E-04	1.57E-03	8.82E-04	3.86E-03
Hydrochloric Acid	6.6	2.4E-02	1.03E-01			0.00E+00			0.00E+00			0.00E+00	2.36E-02	1.03E-01
Indeno(1,2,3-cd)pyrene[1]			0.00E+00			0.00E+00	1.80E-06	8.82E-10	3.86E-09	1.80E-06	3.59E-10	1.57E-09	8.82E-10	3.86E-09
Lead	0.50	0.0018	0.01	9.0E-06	2.5E-10	1.97E-05	5.0E-04	0.0000	1.07E-06	5.0E-04	0.000	4.37E-07	0.00	0.01
Manganese	5.00E-02	1.79E-04	7.82E-04	6.00E-06	3.00E-06	1.31E-05	3.80E-04	1.86E-07	8.16E-07	3.80E-04	7.59E-08	3.32E-07	1.79E-04	7.82E-04
Mercury				3.00E-06	1.50E-06	6.57E-06	2.60E-04	1.27E-07	5.58E-07	2.60E-04	5.19E-08	2.27E-07	1.50E-06	6.57E-06
Methyl Chloroform		0.0E+00	0.0E+00		0.0E+00	0.0E+00		0.0E+00	0.0E+00		0.0E+00	0.0E+00	0.00E+00	0.00E+00
Methyl Ethyl Ketone		0.0E+00	0.0E+00		0.0E+00	0.0E+00		0.0E+00	0.0E+00		0.0E+00	0.0E+00	0.00E+00	0.00E+00
2-Methylnaphthalene[1]							1.80E-06	8.82E-10	3.86E-09	1.80E-06	3.59E-10	1.57E-09	8.82E-10	3.86E-09
3-Methylchloranthrene[1]							2.40E-05	1.18E-08	5.15E-08	2.40E-05	4.79E-09	2.10E-08	1.18E-08	5.15E-08
Naphthalene[1]	9.20E-05	3.3E-07	1.4E-06	1.70E-02	6.1E-05	2.7E-04	6.10E-04	2.99E-07	1.31E-06	6.10E-04	1.22E-07	5.34E-07	6.07E-05	2.66E-04
Nickel	1.60E-01	5.71E-04	2.50E-03	3.00E-06	1.50E-06	6.57E-06	2.10E-03	1.03E-06	4.51E-06	2.10E-03	4.19E-07	1.84E-06	5.71E-04	2.50E-03
Pentane							2.60E+00	1.27E-03	5.58E-03	2.60E+00	5.19E-04	2.27E-03	1.27E-03	5.58E-03
Perylene[1]		0.0E+00	0.0E+00		0.0E+00	0.0E+00		0.0E+00	0.0E+00		0.0E+00	0.0E+00	0.00E+00	0.00E+00
Phenanthrene[1]	1.00E-04	3.6E-07	1.6E-06	4.90E-03	1.8E-05	7.7E-05	1.70E-05	8.33E-09	3.65E-08	1.70E-05	3.39E-09	1.49E-08	1.75E-05	7.67E-05
Phenol	2.80E-05	1.0E-07	4.4E-07										1.00E-07	4.38E-07
Phosphorus		0.0E+00	0.0E+00		0.0E+00	0.0E+00		0.0E+00	0.0E+00		0.0E+00	0.0E+00	0.00E+00	0.00E+00
POM (see below)													1.25E-04	5.48E-04
Propionaldehyde		0.0E+00	0.0E+00		0.0E+00	0.0E+00		0.0E+00	0.0E+00		0.0E+00	0.0E+00	0.00E+00	0.00E+00
Pyrene[1]	8.30E-06	3.0E-08	1.3E-07	3.20E-05	1.1E-07	5.0E-07	5.00E-06	2.45E-09	1.07E-08	5.00E-06	9.98E-10	4.37E-09	1.14E-07	5.01E-07
Selenium				1.50E-05	7.50E-06	3.29E-05	2.40E-05	1.18E-08	5.15E-08	2.40E-05	4.79E-09	2.10E-08	7.50E-06	3.29E-05
Styrene		0.0E+00	0.0E+00		0.0E+00	0.0E+00		0.0E+00	0.0E+00		0.0E+00	0.0E+00	0.00E+00	0.00E+00
2,3,7,8-TCDD		0.0E+00	0.0E+00		0.0E+00	0.0E+00		0.0E+00	0.0E+00		0.0E+00	0.0E+00	0.00E+00	0.00E+00
Toluene							3.40E-03	1.67E-06	7.30E-06	3.40E-03	6.79E-07	2.97E-06	1.67E-06	7.30E-06
Total PCDD/PCDF[3]				2.3E-07	8.2E-10	3.6E-09							8.21E-10	3.60E-09
Trichloroethylene		0.0E+00	0.0E+00		0.0E+00	0.0E+00		0.0E+00	0.0E+00		0.0E+00	0.0E+00	0.00E+00	0.00E+00
Xylene		0.0E+00	0.0E+00		0.0E+00	0.0E+00		0.0E+00	0.0E+00		0.0E+00	0.0E+00	0.00E+00	0.00E+00
TOTALS:			0.12			0.00			0.01			0.00	0.03	0.13

1) Metals: For diesel, emission factors from AP-42 (5/10), Table 1.3-10. For RFO, EFs from AP-42 (10/96), Table 1.11-4, for Atomizing burner. For natural gas, EFs from AP-42 (7/98), Table 1.4-4. For propane, EFs for nat. gas were applied. EFs for diesel expressed in pounds of pollutant per MMBTU. EFs for RFO expressed in pounds of pollutant per 1000 gallons. EFs for natural gas and propane expressed in pounds of pollutant per MMscf.

2) Organic Pollutants: For diesel, emission factors from AP-42 (5/10), Table 1.3-8, for Distillate oil, and AP-42 (3/04), Table 11.1-13. for Hot oil system fired with No. 2 fuel oil. For RFO, EFs from AP-42 (10/96), Table 1.11-5, for Atomizing burner (i.e., except for bis(2-ethylhexyl)phthalate, dichlorobeneze, benz(a)anthracene, and benzo(a)pyrene which rely on values for Vaporizing burner). For HCl from RFO, EF from AP-42 (10/96), Table 1.11-3; 0.1% weight used, per vendor information (i.e., <1000ppm for all halogens). For natural gas, EFs from AP-42 (7/98), Table 1.4-3. For propane, EFs for nat. gas were applied. EFs for diesel and RFO expressed in pounds of pollutant per 1000 gallons. EFs for natural gas and propane expressed in pounds of pollutant per MMscf.

3) POM: Maximum PTE estimates for POM based on polycyclic organic matter mixture as defined by 1900 CAA Amendments. Compounds included in the mixture are denoted in the table. To avoid double counting, the total, maximum PTE estimates do not include POM (i.e., individual compounds are summed separately) or 2, 3, 7, 8-TCDD (included in Total PCDD/PCDF).

Emission Unit:	Operations Generator
Manufacturer/Model:	Cummins, Model QST30-G2, 2006 Model year
Fuel Type(s):	#2 Diesel
Rated Generator Capacity (kW):	800
Gross Engine Output (bhp):	1200
Calculated Fuel Consumption (gal/hr):	60
Calculated Capacity (MMBTU/hr):	8.4
Daily Hours of Operation (hr/d)	13.5
Annual Hours of Operation (hr/yr):	2578.5

Control Equipment:	Tier 2 Certified Engine

Diesel (MMBTU/1000 gallons):	140	(AP-42 (9/85), App A)
Average BSFC (BTU/hp-hr):	7000	(AP-42 (10/96), Table 3.4-1, footnote e)

Potential To Emit - Criteria Pollutants

Criteria Pollutant	#2 Diesel			Max 24hr Ave	Max Annual Ave
	EF	lb/hr	T/yr	lb/hr	lb/hr
CO	0.822	6.90	8.90	3.88	2.03
CO2e		1387.43	1788.74	780.43	408.39
NOx	1.50	12.60	16.24	7.09	3.71
SO2	0.0015	0.01	0.02	0.01	0.00
PM	0.047	0.39	0.51	0.22	0.12
PM10	0.047	0.39	0.51	0.22	0.12
PM2.5	0.056	0.47	0.60	0.26	0.14
VOC	0.305	2.56	3.30	1.44	0.75
Lead					

Emission Factor Information:

1) Carbon Monoxide: Emission factor from 40 CFR 89.112, Table 1, for Tier 2 engine >560kW. Expressed in pounds of CO per MMBTU fuel input.

2) Carbon Dioxide Equivalent: Refer to Greenhouse Gases table for calculation methodology.

3) Nitrogen Oxides: Emission factor from 40 CFR 89.112, Table 1, for Tier 2 engine >560kW. Applied EF for NMHC+NOx, assuming 100% NOx. EF expressed in pounds of NOx per MMBTU fuel input.

4) Sulfur Dioxide: Emission factor from AP-42 (10/96), Table 3.4-1, for Diesel fuel; sulfur content is 0.0015%. EF expressed as pounds SO2 per MMBTU fuel input.

5) Particulate Matter: Emission factor from 40 CFR 89.112, Table 1, for Tier 2 engine >560kW. Expressed in pounds of PM per MMBTU fuel input.

6) PM-10: Assumed all PM equal to PM-10. Expressed in pounds of PM-10 per MMBTU fuel input.

7) PM-2.5: Emission factor from AP-42 (10/96), Table 3.4-2, summed EFs for filterable PM<3 and condensable PM. Expressed in pounds of PM-2.5 per MMBTU fuel input.

8) VOCs: Emission factor from 40 CFR 89.112, Table 1, for Tier 1 engine >560kW, assumed HC is equal to VOC. Expressed in pounds of VOC per MMBTU fuel input.

9) Lead: No emission factor identified for lead emissions from large uncontrolled stationary diesel engines.

Potential To Emit - Non-Carcinogenic TAPs

Non-Carcinogen TAP	#2 Diesel			Max 24hr Ave	Max Annual Ave
	EF	lb/hr	T/yr	lb/hr	lb/hr
Acrolein	7.88E-06	6.62E-05	8.53E-05	3.72E-05	1.95E-05
Naphthalene	1.30E-04	1.09E-03	1.41E-03	6.14E-04	3.21E-04
Toluene	2.81E-04	2.36E-03	3.04E-03	1.33E-03	6.95E-04
Xylenes	1.93E-04	1.62E-03	2.09E-03	9.12E-04	4.77E-04
TOTALS:			6.63E-03		

Potential To Emit - Carcinogen TAPs

Carcinogen TAP	#2 Diesel			Max 24hr Ave	Max Annual Ave
	EF	lb/hr	T/yr	lb/hr	lb/hr
Acenaphthene	4.68E-06	3.93E-05	5.07E-05	2.21E-05	1.16E-05
Acenaphthylene	9.23E-06	7.75E-05	1.00E-04	4.36E-05	2.28E-05
Acetaldehyde	2.52E-05	2.12E-04	2.73E-04	1.19E-04	6.23E-05
Anthracene	1.23E-06	1.03E-05	1.33E-05	5.81E-06	3.04E-06
Benzene	7.76E-04	6.52E-03	8.40E-03	3.67E-03	1.92E-03
Benzo(a)pyrene	2.57E-07	2.16E-06	2.78E-06	1.21E-06	6.35E-07
Benzo(g,h,i)perylene	5.56E-07	4.67E-06	6.02E-06	2.63E-06	1.37E-06
Fluoranthene	4.03E-06	3.39E-05	4.36E-05	1.90E-05	9.96E-06
Fluorene	1.28E-05	1.08E-04	1.39E-04	6.05E-05	3.16E-05
Formaldehyde	7.89E-05	6.63E-04	8.54E-04	3.73E-04	1.95E-04
Naphthalene	1.30E-04	1.09E-03	1.41E-03	6.14E-04	3.21E-04
Phenanthrene	4.08E-05	3.43E-04	4.42E-04	1.93E-04	1.01E-04
POM (see below)	4.49E-06	3.77E-05	4.86E-05	2.12E-05	1.11E-05
Pyrene	3.71E-06	3.12E-05	4.02E-05	1.75E-05	9.17E-06
TOTALS:			1.18E-02		

Polycyclic Organic Matter Mixture

Polycyclic Organic Matter (POM)	#2 Diesel		
	EF	lb/hr	T/yr
Benzo(a)anthracene	6.22E-07	5.22E-06	6.74E-06
Benzo(b)fluoranthene	1.11E-06	9.32E-06	1.20E-05
Benzo(k)fluoranthene	2.18E-07	1.83E-06	2.36E-06
Benzo(a)pyrene	2.57E-07	2.16E-06	2.78E-06
Chrysene	1.52E-06	1.28E-05	1.65E-05
Dibenzo(a,h)anthracene	3.46E-07	2.91E-06	3.75E-06
Indeno(1,2,3-cd)pyrene	4.14E-07	3.48E-06	4.48E-06
TOTALS:	4.49E-06		4.86E-05

Emission Factor Information:

1) TAPs: Emission factor from AP-42 (10/96), Tables 3.4-3 and 3.4-4. Expressed in pounds of pollutant per MMBTU of fuel input.

2) POM: Emission factors for POM based on polyaromatic hydrocarbon mixture identified in IDAPA 58.01.01.586. Refer to Polycyclic Organic Matter Mixture table for calculation methodology.

Greenhouse Gases

GHG	#2 Diesel		
	EF	lb/hr	T/yr
CO2	165.0	1386.00	1786.9
Methane	0.008	0.07	0.09
CO2e		1387.43	1788.74

Emission Factor Information:

1) Carbon Dioxide: Emission factor from AP-42 (10/96), Table 3.4-1. EF expressed in pounds of CO2 per MMBTU of fuel input.

2) Methane: Emission factor from AP-42 (10/96), Table 3.4-1; assumed 9% of TOC to be methane, per footnote f). EF expressed in pounds of methane per MMBTU of fuel input.

3) CO2e: The sum of CO2 and methane expressed as carbon dioxide equivalent. A global warming potential of 21 was applied to methane.

Potential To Emit - HAPs

HAP	#2 Diesel		
	EF	lb/hr	T/yr
Acenaphthene[2]	4.68E-06	3.93E-05	0.0001
Acenaphthylene[2]	9.23E-06	7.75E-05	0.0001
Acetaldehyde	2.52E-05	2.12E-04	0.000
Acrolein	7.88E-06	6.62E-05	0.0001
Anthracene[2]	1.23E-06	1.03E-05	0.00001
Benzene	7.76E-04	6.52E-03	0.01
Benzo(a)anthracene[2]	6.22E-07	5.22E-06	0.00001
Benzo(a)pyrene[2]	2.57E-07	2.16E-06	0.00000
Benzo(b)fluoranthene[2]	1.11E-06	9.32E-06	0.00001
Benzo(g,h,i)perylene[2]	5.56E-07	4.67E-06	0.00001
Benzo(k)fluoranthene[2]	2.18E-07	1.83E-06	0.00000
Chrysene[2]	1.52E-06	1.28E-05	0.00002
Dibenzo(a,h)anthracene[2]	3.46E-07	2.91E-06	0.00000
Fluoranthene[2]	4.03E-06	3.39E-05	0.0000
Fluorene[2]	1.28E-05	1.08E-04	0.0001
Formaldehyde	7.89E-05	6.63E-04	0.001
Indeno(1,2,3-cd)pyrene[2]	4.14E-07	3.48E-06	0.00000
Naphthalene[2]	1.30E-04	1.09E-03	0.001
Phenanthrene[2]	4.08E-05	3.43E-04	0.000
POM (see below)		1.78E-03	0.0023
Pyrene[2]	3.71E-06	3.12E-05	0.0000
Toluene	2.81E-04	2.36E-03	0.00
Xylene	1.93E-04	1.62E-03	0.00
TOTALS:			0.02

Emission Factor Information:

1) HAPs: Emission factors from AP-42 (10/96), Tables 3.4-3 and 3.4-4. Expressed in pounds of pollutant per MMBTU of fuel input.

2) POM: Maximum PTE estimates for POM based on polycyclic organic matter mixture as defined by 1900 CAA Amendments. Compounds included in the mixture are denoted in the table. To avoid double counting, the total, maximum PTE estimates do not include POM (i.e., individual compounds are summed separately).

Emission Unit:	Night Generator
Manufacturer/Model:	Wacker, Model G-50, mfd in 2010 (equipped with John Deere PowerTech 4045D engine, 2007 Model year)
Fuel Type(s):	#2 Diesel
Rated Generator Capacity (kW):	38
Gross Engine Output (bhp):	67
Calculated Fuel Consumption (gal/hr):	3.35
Calculated Capacity (MMBTU/hr):	0.469
Daily Hours of Operation (hr/d)	24
Annual Hours of Operation (hr/yr):	8760

Control Equipment:	Tier 2 Certified Engine

Diesel (MMBTU/1000 gallons):	140	(AP-42 (9/85), App A)
Average BSFC (BTU/hp-hr):	7000	(AP-42 (10/96), Table 3.4-1, footnote e)

Potential To Emit - Criteria Pollutants

Criteria Pollutant	#2 Diesel			Max 24hr Ave	Max Annual Ave
	EF	lb/hr	T/yr	lb/hr	lb/hr
CO	1.17	0.55	2.41	0.55	0.55
CO2e		76.92	336.89	76.92	76.92
NOx	1.76	0.83	3.62	0.83	0.83
SO2	0.29	0.0004	0.002	0.0004	0.0004
PM	0.09	0.04	0.19	0.04	0.04
PM10	0.09	0.04	0.19	0.04	0.04
PM2.5	0.09	0.04	0.19	0.04	0.04
VOC	0.36	0.17	0.74	0.17	0.17
Lead					

Emission Factor Information:

1) Carbon Monoxide: Emission factor from 40 CFR 89.112, Table 1, for Tier 2 engine 37≤KW<75. Expressed in pounds of CO per MMBTU fuel input.

2) Carbon Dioxide Equivalent: Refer to Greenhouse Gases table for calculation methodology.

3) Nitrogen Oxides: Emission factor from 40 CFR 89.112, Table 1, for Tier 2 engine 37≤KW<75. Applied EF for NMHC+NOx, assuming 100% NOx. EF expressed in pounds of NOx per MMBTU fuel input.

4) Sulfur Dioxide: Emission factor from AP-42 (10/96), Table 3.3-1, for Diesel fuel. Per DEQ methodology, it was assumed that the AP-42 EF is based on use a max fuel sulfur content of 0.5%; a ratio has been applied to incorporate the vendor's specification of 0.0015% sulfur (i.e., 0.0015/0.5=0.003). EF expressed as pounds SO2 per MMBTU fuel input.

5) Particulate Matter: Emission factor from 40 CFR 89.112, Table 1, for Tier 2 engine 37<KW<75. Expressed in pounds of PM per MMBTU fuel input.

6) PM-10: Assumed all PM equal to PM-10. Expressed in pounds of PM-10 per MMBTU fuel input.

7) PM-2.5: Assumed all PM equal to PM-2.5. Expressed in pounds of PM-2.5 per MMBTU fuel input.

8) VOCs: Emission factor from AP-42 (10/96), Table 3.3-1. EF for TOC Exhaust and Crankcase assumed equivalent to VOC. Expressed in pounds of VOC per MMBTU fuel input.

9) Lead: No emission factor identified for lead emissions from large uncontrolled stationary diesel engines.

Potential To Emit - Non-Carcinogenic TAPs

Non-Carcinogen TAP	#2 Diesel			Max 24hr Ave	Max Annual Ave
	EF	lb/hr	T/yr	lb/hr	lb/hr
Acrolein	9.25E-05	4.34E-05	1.90E-04	4.34E-05	4.34E-05
Naphthalene	8.48E-05	3.98E-05	1.74E-04	3.98E-05	3.98E-05
Toluene	4.09E-04	1.92E-04	8.40E-04	1.92E-04	1.92E-04
Xylenes	2.85E-04	1.34E-04	5.85E-04	1.34E-04	1.34E-04
TOTALS:			1.79E-03		

Potential To Emit - Carcinogenic TAPs

Carcinogen TAP	#2 Diesel			Max 24hr Ave	Max Annual Ave
	EF	lb/hr	T/yr	lb/hr	lb/hr
Acenaphthene	1.42E-06	6.66E-07	2.92E-06	6.66E-07	6.66E-07
Acenaphthylene	5.06E-06	2.37E-06	1.04E-05	2.37E-06	2.37E-06
Acetaldehyde	7.67E-04	3.60E-04	1.58E-03	3.60E-04	3.60E-04
Anthracene	1.87E-06	8.77E-07	3.84E-06	8.77E-07	8.77E-07
Benzene	9.33E-04	4.38E-04	1.92E-03	4.38E-04	4.38E-04
Benzo(a)pyrene	1.88E-07	8.82E-08	3.86E-07	8.82E-08	8.82E-08
Benzo(g,h,i)perylene	4.89E-07	2.29E-07	1.00E-06	2.29E-07	2.29E-07
1,3-Butadiene	3.91E-05	1.83E-05	8.03E-05	1.83E-05	1.83E-05
Fluoranthene	7.61E-06	3.57E-06	1.56E-05	3.57E-06	3.57E-06
Fluorene	2.92E-05	1.37E-05	6.00E-05	1.37E-05	1.37E-05
Formaldehyde	1.18E-03	5.53E-04	2.42E-03	5.53E-04	5.53E-04
Naphthalene	8.48E-05	3.98E-05	1.74E-04	3.98E-05	3.98E-05
Phenanthrene	2.94E-05	1.38E-05	6.04E-05	1.38E-05	1.38E-05
POM (see below)	3.43E-06	1.61E-06	7.05E-06	1.61E-06	1.61E-06
Pyrene	4.78E-06	2.24E-06	9.82E-06	2.24E-06	2.24E-06
TOTALS:			6.34E-03		

Polycyclic Organic Matter Mixture

Polycyclic Organic Matter (POM)	#2 Diesel		
	EF	lb/hr	T/yr
Benzo(a)anthracene	1.68E-06	7.88E-07	3.45E-06
Benzo(b)fluoranthene	9.91E-08	4.65E-08	2.04E-07
Benzo(k)fluoranthene	1.55E-07	7.27E-08	3.18E-07
Benzo(a)pyrene	1.88E-07	8.82E-08	3.86E-07
Chrysene	3.53E-07	1.66E-07	7.25E-07
Dibenzo(a,h)anthracene	5.83E-07	2.73E-07	1.20E-06
Indeno(1,2,3-cd)pyrene	3.75E-07	1.76E-07	7.70E-07
TOTALS:	3.43E-06		7.05E-06

Emission Factor Information:

1) TAPs: Emission factor from AP-42 (10/96), Tables 3.3-2. Expressed in pounds of pollutant per MMBTU of fuel input.

2) POM: Emission factors for POM based on polyaromatic hydrocarbon mixture identified in IDAPA 58.01.01.586. Refer to Polycyclic Organic Matter Mixture table for calculation methodology.

Greenhouse Gases

GHG	#2 Diesel		
	EF	lb/hr	T/yr
CO2	164.0	76.92	336.9
CO2e		76.92	336.89

1) Carbon Dioxide: Emission factor from AP-42 (10/96), Table 3.3-1. EF expressed in pounds of CO2 per MMBTU of fuel input.

Potential To Emit - HAPs

HAP	#2 Diesel		
	EF	lb/hr	T/yr
Acenaphthene[2]	1.42E-06	6.66E-07	2.92E-06
Acenaphthylene[2]	5.06E-06	2.37E-06	1.04E-05
Acetaldehyde	7.67E-04	3.60E-04	1.58E-03
Acrolein	9.25E-05	4.34E-05	1.90E-04
Anthracene[2]	1.87E-06	8.77E-07	3.84E-06
Benzene	9.33E-04	4.38E-04	1.92E-03
Benzo(a)anthracene[2]	1.68E-06	7.88E-07	3.45E-06
Benzo(a)pyrene[2]	1.88E-07	8.82E-08	3.86E-07
Benzo(b)fluoranthene[2]	9.91E-08	4.65E-08	2.04E-07
Benzo(g,h,i)perylene[2]	4.89E-07	2.29E-07	1.00E-06
Benzo(k)fluoranthene[2]	1.55E-07	7.27E-08	3.18E-07
1,3-Butadiene	3.91E-05	1.83E-05	8.03E-05
Chrysene[2]	3.53E-07	1.66E-07	7.25E-07
Dibenzo(a,h)anthracene[2]	5.83E-07	2.73E-07	1.20E-06
Fluoranthene[2]	7.61E-06	3.57E-06	1.56E-05
Fluorene[2]	2.92E-05	1.37E-05	6.00E-05
Formaldehyde	1.18E-03	5.53E-04	2.42E-03
Indeno(1,2,3-cd)pyrene[2]	3.75E-07	1.76E-07	7.70E-07
Naphthalene[2]	8.48E-05	3.98E-05	1.74E-04
Phenanthrene[2]	2.94E-05	1.38E-05	6.04E-05
POM (see below)		7.88E-05	3.45E-04
Pyrene[2]	4.78E-06	2.24E-06	9.82E-06
Toluene	4.09E-04	1.92E-04	8.40E-04
Xylenes	2.85E-04	1.34E-04	5.85E-04
TOTALS:			0.01

1) HAPs: Emission factor from AP-42 (10/96), Tables 3.3-2. Expressed in pounds of pollutant per MMBTU of fuel input.

2) POM: Maximum PTE estimates for POM based on polycyclic organic matter mixture as defined by 1900 CAA Amendments. Compounds included in the mixture are denoted in the table. To avoid double counting, the total, maximum PTE estimates do not include POM (i.e., individual compounds are summed separately).

Emission Unit:	Storage Tanks		
Tank Number:	Tank 1	Tank 2	Tank 3
Material:	Asphalt	RFO	#2 Diesel
Capacity (gallons):	30,000	15,000	6,000

Production capacity (T/hr):	400
Daily Hours of Operation (hr/d):	12.5
Max Daily Production (T/d):	5,000
Annual Hours of Operation (hr/yr):	2,388
Max Annual Production (T/yr):	955000

Tank 1 Throughput

Liquid asphalt in HMA (%):	4	(typical %, per DEQ methodology and AP-42, 11.1 (3/04))
Density of liquid asphalt (lb/gal):	8.69	(http://www.engineeringtoolbox.com/density-materials-d_1652.html)
Asphalt mass per HMA (lb/T):	9.21	
Annual asphalt throughput (gal/yr):	8791714.614	
TOC emission rate (lb/yr) for 300000 gallon annual throughput:	17.97	(Output from TANKS 4.0.9d (AP-42, 7.1), assuming a throughput of 300,000 gallons of asphalt per year. See computer file for details.)
Scaled annual TOC emission rate (lb/yr):	526.62	

Tank 2 Throughput

RFO heating value (MMBTU/1000 gallons):	140	(AP-42, App A)
Total plant capacity (MMBTU/hr):	135.5	(Drum dryer and asphalt tank heater)
Total plant capacity (gallons/hr):	967.9	
Annual RFO throughput (gal/yr):	2310758.93	
TOC emission rate (lb/yr) for 150000 gallon annual throughput:	0.10	(Output from TANKS 4.0.9d (AP-42, 7.1), assuming a throughput of 150,000 gallons of RFO per year. See computer file for details.)
Scaled annual TOC emission rate (lb/yr):	1.54	

Tank 3 Throughput

Diesel heating value (MMBTU/1000 gallons):	140	(AP-42, App A)
Total plant capacity (MMBTU/hr):	135.5	(Drum dryer and asphalt tank heater)
Total plant capacity (gallons/hr):	967.9	
Annual RFO throughput (gal/yr):	2310758.93	
TOC emission rate (lb/yr) for 60000 gallon annual throughput:	4.45	(Output from TANKS 4.0.9d (AP-42, 7.1), assuming a throughput of 60,000 gallons of RFO per year. See computer file for details.)
Scaled annual TOC emission rate (lb/yr):	171.38	

Potential To Emit - Criteria Pollutants

Criteria Pollutant	Tank 1		Tank 2		Tank 3		Total lb/hr	Total T/yr
	lb/hr	T/yr	lb/hr	T/yr	lb/hr	T/yr		
CO	0.021	0.026					0.02	0.03
CO2e	0.012	0.014					0.01	0.01
NOx							0.00	0.00
SO2							0.00	0.00
PM							0.00	0.00
PM10							0.00	0.00
PM2.5							0.00	0.00
VOC	0.221	0.263	0.0006	0.001	0.072	0.086	0.29	0.35
Lead							0.00	0.00

Emission Factor Information:

1) Carbon Monoxide: Emission factor from AP-42 (3/04), page 11.1-9 (i.e., 0.097). EF expressed as a fraction of TOC emissions. No CO emission factor information located for RFO or diesel; CO emissions expected to be very low from unheated tanks.

2) Carbon Dioxide Equivalent: Refer to Greenhouse Gases table for calculation methodology.

3) Nitrogen Oxides: No emission factor information identified; minimal NOx emissions expected from unheated storage tanks.

4) Sulfur Dioxide: No emission factor information identified; minimal SO2 emissions expected from unheated storage tanks.

5) Particulate Matter: No emission factor information identified; minimal PM emissions expected from unheated storage tanks.

6) PM-10: No emission factor information identified; minimal PM10 emissions expected from unheated storage tanks.

7) PM-2.5: No emission factor information identified; minimal PM2.5 emissions expected from unheated storage tanks.

8) VOCs: For Tank 1, onverted calculated TOC emissions rate to VOC per speciation profile in Table 11.1-16 (100% of TOC = VOC). For Tanks 2 and 3, assume all TOC is VOC.

9) Lead: No emission factor information identified; minimal lead emissions expected from unheated storage tanks.

Potential To Emit - Non-Carcinogenic TAPs

Non-Carcinogen TAP	Tank 1			Max 24hr Ave	Max Annual Ave
	EF	lb/hr	T/yr	lb/hr	lb/hr
Acetone	0.055	1.21E-04	1.45E-04	6.32E-05	3.31E-05
Bromomethane	0.0049	1.08E-05	1.29E-05	5.63E-06	2.95E-06
Carbon Disulfide	0.016	3.53E-05	4.21E-05	1.84E-05	9.62E-06
Chloroethane/Ethyl chloride	0.004	8.82E-06	1.05E-05	4.60E-06	2.40E-06
Chloromethane/Methyl chloride	0.023	5.07E-05	6.06E-05	2.64E-05	1.38E-05
Ethyl Benzene	0.038	8.38E-05	1.00E-04	4.37E-05	2.28E-05
Hexane	0.10	2.21E-04	2.63E-04	1.15E-04	6.01E-05
Methyl Ethyl Ketone	0.039	8.60E-05	1.03E-04	4.48E-05	2.34E-05
Styrene	0.0054	1.19E-05	1.42E-05	6.20E-06	3.25E-06
Toluene	0.062	1.37E-04	1.63E-04	7.12E-05	3.73E-05
Xylenes	0.257	5.67E-04	6.77E-04	2.95E-04	1.55E-04
TOTALS:			0.0016		

Potential To Emit - Carcinogenic TAPs

Carcinogen TAP	Tank 1			Max 24hr Ave	Max Annual Ave
	EF	lb/hr	T/yr	lb/hr	lb/hr
Benzene	0.032	7.06E-05	8.43E-05	3.68E-05	1.92E-05
Chloromethane/Methyl chloride	0.023	5.07E-05	6.06E-05	2.64E-05	1.38E-05
Formaldehyde	0.69	1.52E-03	1.82E-03	7.93E-04	4.15E-04
Methylene Chloride/Dichloromethane	0.00027	5.96E-07	7.11E-07	3.10E-07	1.62E-07
TOTALS:			0.0020		

Emission Factor Information:

1) TAPs: Based on speciation factors from AP-42 (3/04), Tables 11.1-16. Speciation factors are converted from percentages and multiplied by the scaled TOC emission rates from TANKS to derive the emissions rates in the PTE tables above. All EFs expressed as percentages TOC emission rates. No speciation factors located for RFO and/or diesel fuel; TAP emissions expected to be very low from unheated tanks.

Greenhouse Gases

GHG	Tank 1		
	EF	lb/hr	T/yr
Methane	0.26	0.0006	0.0007
CO2e		0.012	0.014

1) Methane: Based on speciation factor from AP-42 (3/04), Table 11.1-16. Speciation factor is converted from a percentage and then multiplied by the scaled TOC emission rates from TANKS to derive the emissions rates in the PTE tables above. All EFs expressed as percentages TOC emission rates. No speciation factors located for RFO and/or diesel fuel; GHG emissions expected to be very low from unheated tanks.

2) CO2e: A global warming potential of 21 was applied to methane to derive carbon dioxide equivalent estimates.

Potential To Emit - HAPs

HAP	Tank 1		
	EF	lb/hr	T/yr
Benzene	0.032	7.06E-05	8.43E-05
Bromomethane	0.0049	1.08E-05	1.29E-05
Carbon Disulfide	0.016	3.53E-05	4.21E-05
Chloroethane/Ethyl Chloride	0.004	8.82E-06	1.05E-05
Chloromethane/Methyl chloride	0.023	5.07E-05	6.06E-05
Ethyl Benzene	0.038	8.38E-05	1.00E-04
Formaldehyde	0.69	1.52E-03	1.82E-03
Hexane	0.10	2.21E-04	2.63E-04
Methyl Ethyl Ketone	0.039	8.60E-05	1.03E-04
Methylene Chloride/Dichloromethane	0.00027	5.96E-07	7.11E-07
Styrene	0.0054	1.19E-05	1.42E-05
Toluene	0.062	1.37E-04	1.63E-04
Xylene	0.257	5.67E-04	6.77E-04
TOTALS:			0.00

1) HAPs: Based on speciation factors from AP-42 (3/04), Tables 11.1-16. Speciation factors are converted from percentages and multiplied by the scaled TOC emission rates from TANKS to derive the emissions rates in the PTE tables above. All EFs expressed as percentages TOC emission rates. No speciation factors located for RFO and/or diesel fuel; HAP emissions expected to be very low from unheated tanks.

Emission Unit:	Silo Filling
Production capacity (T/hr):	400
Daily Hours of Operation (hr/d):	12.5
Max Daily Production (T/d):	5000
Annual Hours of Operation (hr/yr):	2387.5
Max Annual Production (T/yr):	955000

Potential To Emit - Criteria Pollutants

Criteria Pollutant	Silo Filling			Max 24hr Ave	Max Annual Ave
	EF	lb/hr	T/yr	lb/hr	lb/hr
CO	1.18E-03	0.47	0.56	0.25	0.13
CO2e		0.27	0.32	0.14	0.07
NOx					
SO2					
PM	5.86E-04	0.23	0.28	0.12	0.06
PM10	5.86E-04	0.23	0.28	0.12	0.06
PM2.5	5.86E-04	0.23	0.28	0.12	0.06
VOC	1.22E-02	4.88	5.83	2.54	1.33
Lead					

Emission Factor Information:

1) Carbon Monoxide: Emission factor from AP-42 (3/04), Table 11.1-14, for Silo filling. Default values of -0.5 and 325°F were used for asphalt volatility (V) and HMA mix temperature (T). Expressed in pounds of CO per ton of HMA produced.

2) Carbon Dioxide Equivalent: Refer to Greenhouse Gases table for calculation methodology.

3) Nitrogen Oxides: No emission factor identified for NOx emissions from silo filling operations.

4) Sulfur Dioxide: No emission factor identified for SO2 emissions from silo filling operations.

5) Particulate Matter: Emission factor from AP-42 (3/04), Table 11.1-14, for Silo filling, Total PM. Default values of -0.5 and 325°F were used for asphalt volatility (V) and HMA mix temperature (T). Expressed in pounds of PM per ton of HMA produced.

6) PM-10: Emission factor from AP-42 (3/04), Table 11.1-14, for Silo filling, Total PM. Default values of -0.5 and 325°F were used for asphalt volatility (V) and HMA mix temperature (T). Per footnote b), all PM assumed to be PM10. Expressed in pounds of PM10 per ton of HMA produced.

7) PM-2.5: Emission factor from AP-42 (3/04), Table 11.1-14, for Silo filling, Total PM. Default values of -0.5 and 325°F were used for asphalt volatility (V) and HMA mix temperature (T). Per footnote b), all PM assumed to be PM2.5. Expressed in pounds of PM2.5 per ton of HMA produced.

8) VOCs: Emission factor from AP-42 (3/04), Table 11.1-14, for Silo filling, TOC. Default values of -0.5 and 325°F were used for asphalt volatility (V) and HMA mix temperature (T). Converted from TOC to VOC per speciation profile in Table 11.1-16 (100% of TOC = VOC). EF expressed in pounds of VOC per ton of HMA produced.

9) Lead: No emission factor identified for lead emissions from silo filling operations.

Emission Factor Estimates and PTE for Organic PM and TOC

Pollutant	EF (lbs/T HMA)	PTE	
		lb/hr	T/yr
Organic PM	2.54E-04	1.02E-01	1.21E-01
TOC	1.22E-02	4.88E+00	5.83E+00

Potential To Emit - Non-Carcinogenic TAPs

Non-Carcinogen TAP	Silo Filling			Max 24hr Ave	Max Annual Ave
	EF	lb/hr	T/yr	lb/hr	lb/hr
Acetone	0.055	2.68E-03	3.20E-03	1.40E-03	7.32E-04
Bromomethane/Methyl bromide	0.0049	2.39E-04	2.85E-04	1.25E-04	6.52E-05
Carbon Disulfide	0.016	7.81E-04	9.32E-04	4.07E-04	2.13E-04
Chloroethane/Ethyl chloride	0.004	1.95E-04	2.33E-04	1.02E-04	5.32E-05
Chloromethane/Methyl chloride	0.023	1.12E-03	1.34E-03	5.85E-04	3.06E-04
Ethyl Benzene	0.038	1.85E-03	2.21E-03	9.66E-04	5.05E-04
Hexane	0.10	4.88E-03	5.83E-03	2.54E-03	1.33E-03
Methyl Ethyl Ketone	0.039	1.90E-03	2.27E-03	9.91E-04	5.19E-04
Naphthalene	1.82	1.85E-03	2.21E-03	9.63E-04	5.04E-04
Phenol	0.0	0.00E+00	0.00E+00	0.00E+00	0.00E+00
Styrene	0.0054	2.64E-04	3.15E-04	1.37E-04	7.18E-05
Toluene	0.062	3.03E-03	3.61E-03	1.58E-03	8.25E-04
Xylenes (o-, m-, p-isomers)	0.257	1.25E-02	1.50E-02	6.53E-03	3.42E-03
TOTALS:			3.74E-02		

Potential To Emit - Carcinogenic TAPs

Carcinogen TAP	Silo Filling			Max 24hr Ave	Max Annual Ave
	EF	lb/hr	T/yr	lb/hr	lb/hr
Acenaphthene	0.47	4.78E-04	5.70E-04	2.49E-04	1.30E-04
Acenaphthylene	0.014	1.42E-05	1.70E-05	7.41E-06	3.88E-06
Anthracene	0.13	1.32E-04	1.58E-04	6.88E-05	3.60E-05
Benzene	0.032	1.56E-03	1.86E-03	8.13E-04	4.26E-04
Benzo(a)pyrene	0.0	0.00E+00	0.00E+00	0.00E+00	0.00E+00
Benzo(g,h,i)perylene	0.0	0.00E+00	0.00E+00	0.00E+00	0.00E+00
Benzo(e)pyrene	0.0095	9.65E-06	1.15E-05	5.03E-06	2.63E-06
Chloromethane/Methyl chloride	0.023	1.12E-03	1.34E-03	5.85E-04	3.06E-04
Fluoranthene	0.15	1.52E-04	1.82E-04	7.94E-05	4.15E-05
Fluorene	1.01	1.03E-03	1.22E-03	5.34E-04	2.80E-04
Formaldehyde	0.69	3.37E-02	4.02E-02	1.75E-02	9.18E-03
Methylene Chloride/Dichloromethane	0.00027	1.32E-05	1.57E-05	6.86E-06	3.59E-06
2-Methylnaphthalene	5.27	5.35E-03	6.39E-03	2.79E-03	1.46E-03
Naphthalene	1.82	1.85E-03	2.21E-03	9.63E-04	5.04E-04
Perylene	0.030	3.05E-05	3.64E-05	1.59E-05	8.31E-06
Phenanthrene	1.80	1.83E-03	2.18E-03	9.53E-04	4.98E-04
POM (see below)	2.66E-01	2.70E-04	3.23E-04	1.41E-04	7.37E-05
Pyrene	0.44	4.47E-04	5.34E-04	2.33E-04	1.22E-04
TOTALS:			5.73E-02		

Polycyclic Organic Matter Mixture

Polycyclic Organic Matter (POM)	Silo Filling		
	EF	lb/hr	T/yr
Benzo(a)anthracene	0.056	5.69E-05	6.79E-05
Benzo(b)fluoranthene	0.0	0.00E+00	0.00E+00
Benzo(k)fluoranthene	0.0	0.00E+00	0.00E+00
Benzo(a)pyrene	0.0	0.00E+00	0.00E+00
Chrysene	0.21	2.13E-04	2.55E-04
Dibenzo(a,h)anthracene	0.0	0.00E+00	0.00E+00
Indeno(1,2,3-cd)pyrene	0.0	0.00E+00	0.00E+00
TOTALS:	2.66E-01		3.23E-04

Emission Factor Information:

1) Organic PM and TOC Emission Factors: Emission factor from AP-42 (3/04), Table 11.1-14, for Silo filling. Default values of -0.5 and 325°F were used for asphalt volatility (V) and HMA mix temperature (T). Expressed in pounds of pollutant per ton of HMA produced. PTE based on max hourly and annual HMA production rates.

2) TAPs: Based on speciation factors from AP-42 (3/04), Tables 11.1-15 and 11.1-16. Speciation factors are converted from percentages and multiplied by theappropriate emission rate for Organic PM or TOC to derive the emissions rates in the PTE tables above. All EFs expressed as percentages of Organic PM or TOC emission rates.

3) POM: Emission factors for POM based on polyaromatic hydrocarbon mixture identified in IDAPA 58.01.01.586. Refer to Polycyclic Organic Matter Mixture table for calculation methodology.

Greenhouse Gases

GHG	Silo Filling		
	EF	lb/hr	T/yr
Methane	0.26	0.01	0.02
CO2e		0.27	0.32

1) Methane: Based on speciation factors from AP-42 (3/04), Table 11.1-16. Speciation factor is converted from a percentage and then multiplied by the TOC emission factor to derive the EF in the table. EF expressed in pounds of methane per ton of HMA.

2) CO2e: A global warming potential of 21 was applied to methane to derive carbon dioxide equivalent estimates.

Potential To Emit - HAPs

HAP	Silo Filling		
	EF	lb/hr	T/yr
Acenaphthene[2]	0.47	4.78E-04	0.0006
Acenaphthylene[2]	0.014	1.42E-05	0.0000
Anthracene[2]	0.13	1.32E-04	0.0002
Benzene	0.032	1.56E-03	0.0019
Benzo(a)anthracene[2]	0.056	5.69E-05	0.0001
Benzo(a)pyrene[2]	0.0	0.00E+00	0.0000
Benzo(b)fluoranthene[2]	0.0	0.00E+00	0.0000
Benzo(e)pyrene[2]	0.0095	9.65E-06	0.0000
Benzo(g,h,i)perylene[2]	0.0	0.00E+00	0.0000
Benzo(k)fluoranthene[2]	0.0	0.00E+00	0.0000
Bromomethane	0.0049	2.39E-04	0.0003
Carbon Disulfide	0.016	7.81E-04	0.0009
Chloroethane/Ethyl Chloride	0.004	1.95E-04	0.0002
Chloromethane/Methyl chloride	0.023	1.12E-03	0.0013
Chrysene[2]	0.21	2.13E-04	0.0003
Dibenzo(a,h)anthracene[2]	0.0	0.00E+00	0.0000
Ethyl Benzene	0.038	1.85E-03	0.0022
Fluoranthene[2]	0.15	1.52E-04	0.0002
Fluorene[2]	1.01	1.03E-03	0.0012
Formaldehyde	0.69	3.37E-02	0.0402
Hexane	0.10	4.88E-03	5.83E-03
Indeno(1,2,3-cd)pyrene[2]	0.0	0.00E+00	0.0000
Methyl Ethyl Ketone	3.90E-02	1.90E-03	0.0023
MTBE	0.0	0.00E+00	0.0000
Methylene Chloride	0.00027	1.32E-05	0.0000
2-Methylnaphthalene[2]	5.27	5.35E-03	0.0064
Naphthalene[2]	1.82	1.85E-03	0.0022
Perylene[2]	0.030	3.05E-05	0.0000
Phenanthrene[2]	1.80	1.83E-03	0.0022
Phenol	0.0	0.00E+00	0.0000
POM (see below)		1.16E-02	0.0138
Pyrene[2]	0.44	4.47E-04	0.0005
Styrene	0.0054	2.64E-04	0.0003
Toluene	0.062	3.03E-03	0.0036
Xylene	0.257	1.25E-02	0.0150
TOTALS:			0.09

1) HAPs: Based on speciation factors from AP-42 (3/04), Tables 11.1-15 and 11.1-16. Speciation factors are multiplied by the appropriate emission rate for Organic PM or TOC to derive the emissions rates in the PTE tables above. All EFs expressed as percentages of Organic PM or TOC emission rates.

2) POM: Maximum PTE estimates for POM based on polycyclic organic matter mixture as defined by 1900 CAA Amendments. Compounds included in the mixture are denoted in the table. To avoid double counting, the total, maximum PTE estimates do not include POM (i.e., individual compounds are summed separately).

Emission Unit:	Silo Loadout
Production capacity (T/hr):	400
Daily Hours of Operation (hr/d):	12.5
Max Daily Production (T/d):	5000
Annual Hours of Operation (hr/yr):	2387.5
Max Annual Production (T/yr):	955000

Potential To Emit - Criteria Pollutants

Criteria Pollutant	Silo Loadout			Max 24hr Ave	Max Annual Ave
	EF	lb/hr	T/yr	lb/hr	lb/hr
CO	1.35E-03	0.54	0.64	0.28	0.15
CO2e		2.27	2.71	1.18	0.62
NOx					
SO2					
PM	5.22E-04	0.21	0.25	0.11	0.06
PM10	5.22E-04	0.21	0.25	0.11	0.06
PM2.5	5.22E-04	0.21	0.25	0.11	0.06
VOC	3.91E-03	1.56	1.87	0.81	0.43
Lead					

Emission Factor Information:

1) Carbon Monoxide: Emission factor from AP-42 (3/04), Table 11.1-14, for Loadout. Default values of -0.5 and 325°F were used for asphalt volatility (V) and HMA mix temperature (T). Expressed in pounds of CO per ton of HMA produced.

2) Carbon Dioxide Equivalent: Refer to Greenhouse Gases table for calculation methodology.

3) Nitrogen Oxides: No emission factor identified for NOx emissions from silo filling operations.

4) Sulfur Dioxide: No emission factor identified for SO2 emissions from silo filling operations.

5) Particulate Matter: Emission factor from AP-42 (3/04), Table 11.1-14, for Loadout, Total PM. Default values of -0.5 and 325°F were used for asphalt volatility (V) and HMA mix temperature (T). Expressed in pounds of PM per ton of HMA produced.

6) PM-10: Emission factor from AP-42 (3/04), Table 11.1-14, for Loadout, Total PM. Default values of -0.5 and 325°F were used for asphalt volatility (V) and HMA mix temperature (T). Per footnote b), all PM assumed to be PM10. Expressed in pounds of PM10 per ton of HMA produced.

7) PM-2.5: Emission factor from AP-42 (3/04), Table 11.1-14, for Loadout, Total PM. Default values of -0.5 and 325°F were used for asphalt volatility (V) and HMA mix temperature (T). Per footnote b), all PM assumed to be PM2.5. Expressed in pounds of PM2.5 per ton of HMA produced.

8) VOCs: Emission factor from AP-42 (3/04), Table 11.1-14, for Loadout, TOC. Default values of -0.5 and 325°F were used for asphalt volatility (V) and HMA mix temperature (T). Converted from TOC to VOC per speciation profile in Table 11.1-16 (94% of TOC = VOC). EF expressed in pounds of VOC per ton of HMA produced.

9) Lead: No emission factor identified for lead emissions from silo filling operations.

Emission Factor Estimates and PTE for Organic PM and TOC

Pollutant	EF (lbs/T HMA)	PTE	
		lb/hr	T/yr
Organic PM	3.41E-04	1.36E-01	1.63E-01
TOC	4.16E-03	1.66E+00	1.99E+00

Potential To Emit - Non-Carcinogenic TAPs

Non-Carcinogen TAP	Silo Loadout			Max 24hr Ave	Max Annual Ave
	EF	lb/hr	T/yr	lb/hr	lb/hr
Acetone	0.046	7.65E-04	9.14E-04	3.99E-04	2.09E-04
Bromomethane/Methyl bromide	0.0096	1.60E-04	1.91E-04	8.32E-05	4.35E-05
Carbon Disulfide	0.013	2.16E-04	2.58E-04	1.13E-04	5.90E-05
Chloroethane/Ethyl Chloride	0.00021	3.49E-06	4.17E-06	1.82E-06	9.52E-07
Chloromethane/Methyl chloride	0.015	2.50E-04	2.98E-04	1.30E-04	6.80E-05
Cumene	0.11	1.83E-03	2.19E-03	9.53E-04	4.99E-04
Ethyl Benzene	0.28	4.66E-03	5.56E-03	2.43E-03	1.27E-03
Hexane	0.15	2.50E-03	2.98E-03	1.30E-03	6.80E-04
Methyl Ethyl Ketone	0.049	8.15E-04	9.73E-04	4.25E-04	2.22E-04
Naphthalene	1.25	1.71E-03	2.04E-03	8.88E-04	4.65E-04
Phenol	1.18	1.61E-03	1.92E-03	8.38E-04	4.39E-04
Styrene	0.0073	1.21E-04	1.45E-04	6.33E-05	3.31E-05
Toluene	0.21	3.49E-03	4.17E-03	1.82E-03	9.52E-04
1,1,1-Trichloroethane/Methyl Chlorofor	0.00	0.00E+00	0.00E+00	0.00E+00	0.00E+00
Xylenes (o-, m-, p-isomers)	0.49	8.15E-03	9.73E-03	4.25E-03	2.22E-03
TOTALS:			3.14E-02		

Potential To Emit - Carcinogenic TAPs

Carcinogen TAP	Silo Loadout			Max 24hr Ave	Max Annual Ave
	EF	lb/hr	T/yr	lb/hr	lb/hr
Acenaphthene	0.26	3.55E-04	4.23E-04	1.85E-04	9.67E-05
Acenaphthylene	0.028	3.82E-05	4.56E-05	1.99E-05	1.04E-05
Anthracene	0.070	9.55E-05	1.14E-04	4.97E-05	2.60E-05
Benzene	0.052	8.65E-04	1.03E-03	4.51E-04	2.36E-04
Benzo(a)pyrene	0.0023	3.14E-06	3.75E-06	1.63E-06	8.55E-07
Benzo(g,h,i)perylene	0.0019	2.59E-06	3.09E-06	1.35E-06	7.06E-07
Benzo(e)pyrene	0.0078	1.06E-05	1.27E-05	5.54E-06	2.90E-06
Chloromethane/Methyl chloride	0.015	2.50E-04	2.98E-04	1.30E-04	6.80E-05
Fluoranthene	0.050	6.82E-05	8.14E-05	3.55E-05	1.86E-05
Fluorene	0.77	1.05E-03	1.25E-03	5.47E-04	2.86E-04
Formaldehyde	0.088	1.46E-03	1.75E-03	7.63E-04	3.99E-04
Methylene Chloride/Dichloromethane	0.0	0.00E+00	0.00E+00	0.00E+00	0.00E+00
2-Methylnaphthalene	2.38	3.25E-03	3.88E-03	1.69E-03	8.85E-04
Naphthalene	1.25	1.71E-03	2.04E-03	8.88E-04	4.65E-04
Perylene	0.022	3.00E-05	3.58E-05	1.56E-05	8.18E-06
Phenanthrene	0.81	1.10E-03	1.32E-03	5.75E-04	3.01E-04
POM (see below)	1.35E-01	1.84E-04	2.20E-04	9.59E-05	5.02E-05
Pyrene	0.15	2.05E-04	2.44E-04	1.07E-04	5.58E-05
Tetrachloroethene/Tetrachloroethylene	0.0077	1.28E-04	1.53E-04	6.67E-05	3.49E-05
Trichloroethene/Trichloroethylene	0.0	0.00E+00	0.00E+00	0.00E+00	0.00E+00
TOTALS:			1.29E-02		

Polycyclic Organic Matter Mixture

Polycyclic Organic Matter (POM)	Silo Loadout		
	EF	lb/hr	T/yr
Benzo(a)anthracene	0.019	2.59E-05	3.09E-05
Benzo(b)fluoranthene	0.0076	1.04E-05	1.24E-05
Benzo(k)fluoranthene	0.0022	3.00E-06	3.58E-06
Benzo(a)pyrene	0.0023	3.14E-06	3.75E-06
Chrysene	0.103	1.40E-04	1.68E-04
Dibenzo(a,h)anthracene	0.00037	5.05E-07	6.02E-07
Indeno(1,2,3-cd)pyrene	0.00047	6.41E-07	7.65E-07
TOTALS:	1.35E-01		2.20E-04

Emission Factor Information:

1) Organic PM and TOC Emission Factors: Emission factor from AP-42 (3/04), Table 11.1-14, for Loadout. Default values of -0.5 and 325°F were used for asphalt volatility (V) and HMA mix temperature (T). Expressed in pounds of pollutant per ton of HMA produced. PTE based on max hourly and annual HMA production rates.

2) TAPs: Based on speciation factors from AP-42 (3/04), Tables 11.1-15 and 11.1-16. Speciation factors are converted from percentages and multiplied by theappropriate emission rate for Organic PM or TOC to derive the emissions rates in the PTE tables above. All EFs expressed as percentages of Organic PM or TOC emission rates.

3) POM: Emission factors for POM based on polyaromatic hydrocarbon mixture identified in IDAPA 58.01.01.586. Refer to Polycyclic Organic Matter Mixture table for calculation methodology.

Greenhouse Gases

GHG	Silo Loadout		
	EF	lb/hr	T/yr
Methane	6.50	0.11	0.13
CO2e		2.27	2.71

1) Methane: Based on speciation factors from AP-42 (3/04), Table 11.1-16. Speciation factor is converted from a percentage and then multiplied by the TOC emission factor to derive the EF in the table. EF expressed in pounds of methane per ton of HMA.

2) CO2e: A global warming potential of 21 was applied to methane to derive carbon dioxide equivalent estimates.

Potential To Emit - HAPs

HAP	Silo Loadout		
	EF	lb/hr	T/yr
Acenaphthene[2]	0.26	3.55E-04	0.0004
Acenaphthylene[2]	0.028	3.82E-05	0.0000
Anthracene[2]	0.070	9.55E-05	0.0001
Benzene	0.052	8.65E-04	0.0010
Benzo(a)anthracene[2]	0.019	2.59E-05	0.0000
Benzo(a)pyrene[2]	0.0023	3.14E-06	0.0000
Benzo(b)fluoranthene[2]	0.0076	1.04E-05	0.0000
Benzo(e)pyrene[2]	0.0078	1.06E-05	0.0000
Benzo(g,h,i)perylene[2]	0.0019	2.59E-06	0.0000
Benzo(k)fluoranthene[2]	0.0022	3.00E-06	0.0000
Bromomethane	0.0096	1.60E-04	0.0002
Carbon Disulfide	0.013	2.16E-04	0.0003
Chloroethane/Ethyl Chloride	0.00021	3.49E-06	0.0000
Chloromethane/Methyl chloride	0.015	2.50E-04	0.0003
Chrysene[2]	0.103	1.40E-04	0.0002
Cumene	0.11	1.83E-03	0.0022
Dibenzo(a,h)anthracene[2]	0.00037	5.05E-07	0.0000
Ethyl Benzene	0.28	4.66E-03	0.0056
Fluoranthene[2]	0.050	6.82E-05	0.0001
Fluorene[2]	0.77	1.05E-03	0.0013
Formaldehyde	0.088	1.46E-03	0.0017
Hexane	0.15	2.50E-03	0.0030
Indeno(1,2,3-cd)pyrene[2]	0.00047	6.41E-07	0.0000
Methyl Chloroform	0.00	0.00E+00	0.0000
Methyl Ethyl Ketone	0.049	8.15E-04	0.0010
MTBE	0.0	0.00E+00	0.0000
Methylene Chloride	0.0	0.00E+00	0.0000
2-Methylnaphthalene[2]	2.38	3.25E-03	0.0039
Naphthalene[2]	1.25	1.71E-03	0.0020
Perylene[2]	0.022	3.00E-05	0.0000
Phenanthrene[2]	0.81	1.10E-03	0.0013
Phenol	1.18	1.61E-03	0.0019
POM (see below)		8.09E-03	0.0097
Pyrene[2]	0.15	2.05E-04	0.0002
Styrene	0.0073	1.21E-04	0.0001
Tetrachloroethene/Tetrachloroethylene	0.0077	1.28E-04	0.0002
Toluene	0.21	3.49E-03	0.0042
Trichloroethene/Trichloroethylene	0.0	0.00E+00	0.0000
Xylene	0.49	8.15E-03	0.0097
TOTALS:			0.04

1) HAPs: Based on speciation factors from AP-42 (3/04), Tables 11.1-15 and 11.1-16. Speciation factors are converted from percentages and multiplied by theappropriate emission rate for Organic PM or TOC to derive the emissions rates in the PTE tables above. All EFs expressed as percentages of Organic PM or TOC emission rates.

2) POM: Maximum PTE estimates for POM based on polycyclic organic matter mixture as defined by 1900 CAA Amendments. Compounds included in the mixture are denoted in the table. To avoid double counting, the total, maximum PTE estimates do not include POM (i.e., individual compounds are summed separately).

Emission Unit:	Aggregate Handling and Screening
Aggregrate in HMA (%):	96 (Typical %, per DEQ methodology and AP-42, 11.1 (3/04))
Production Capacity (T/hr):	384
Daily Hours of Operation (hr/d):	12.5
Max Daily Production (T/d):	4800
Annual Hours of Operation (hr/yr):	2387.5
Max Annual Production (T/yr):	916800

1. AGGREGATE DROPS FROM FRONT END LOADER

Total tansfer points:	1	From drop to cold bins (stockpile will already be onsite during HMA operations).

Potential To Emit - Criteria Pollutants

Criteria Pollutant	EF	lb/hr	T/yr	Max 24hr Ave lb/hr	Max Annual Ave lb/hr
PM	0.003305	1.27	1.52	0.66	0.35
PM10	0.000765	0.29	0.35	0.15	0.08
PM2.5	0.000116	0.04	0.05	0.02	0.01

Emission Factor Information:

1) Particulate Matter: Emission factor from AP-42, 13.2.4 (11/06), Equation 1: $EF = k\ (0.0032) \times (U/5)^{1.3}\ /\ (M/2)^{1.4}$
Where: k (particle size multiplier) = 0.74 for PM, U (mean wind speed) = 10 mph, and M (moisture content) = 5%. Per DEQ methodology, 10 mph assumed to be base case for mean wind speed. Moisture typically ranges from 3-7% (STAPPA-ALAPCO-EPA, Emission Inventory Improvement Program, Volume II, Chapter 3, Preferred and Alternative Methods for Estimating Air from Hot Mix Asphalt Plants, Final Report, July 1996); 5% is typical for Western Construction HMA plants, per owner. EF expressed in pounds of PM per ton of aggregate.

2) PM-10: Emission factor from AP-42, 13.2.4 (11/06), Equation 1: $EF = k\ (0.0032) \times (U/5)^{1.3}\ /\ (M/2)^{1.4}$
Where: k (particle size multiplier) = 0.35 for PM, U (mean wind speed) = 10 mph, and M (moisture content) = 5%. Per DEQ methodology, 10 mph assumed to be base case for mean wind speed. Moisture typically ranges from 3-7% (STAPPA-ALAPCO-EPA, Emission Inventory Improvement Program, Volume II, Chapter 3, Preferred and Alternative Methods for Estimating Air from Hot Mix Asphalt Plants, Final Report, July 1996); 5% is typical for Western Construction HMA plants, per owner. EF expressed in pounds of PM10 per ton of aggregate.

3) PM-2.5: Emission factor from AP-42, 13.2.4 (11/06), Equation 1: $EF = k\ (0.0032) \times (U/5)^{1.3}\ /\ (M/2)^{1.4}$
Where: k (particle size multiplier) = 0.053 for PM, U (mean wind speed) = 10 mph, and M (moisture content) = 5%. Per DEQ methodology, 10 mph assumed to be base case for mean wind speed. Moisture typically ranges from 3-7% (STAPPA-ALAPCO-EPA, Emission Inventory Improvement Program, Volume II, Chapter 3, Preferred and Alternative Methods for Estimating Air from Hot Mix Asphalt Plants, Final Report, July 1996); 5% is typical for Western Construction HMA plants, per owner. EF expressed in pounds of PM2.5 per ton of aggregate.

4) Other Pollutants: No emissions other than particulate matter are associated with aggregate handling.

2. AGGREGATE DROPS FROM CONVEYERS

Total tansfer points:	4	[1) bins to conveyor, 2) conveyor to screen, 3) screen to conveyor, and 4) conveyor to drum]

Potential To Emit - Criteria Pollutants

Criteria Pollutant	EF	lb/hr	T/yr	Max 24hr Ave lb/hr	Max Annual Ave lb/hr
PM	0.00014	0.22	0.26	0.11	0.06
PM10	0.000046	0.07	0.08	0.04	0.02
PM2.5	0.000013	0.02	0.02	0.01	0.01

Emission Factor Information:

1) Particulate Matter: Emission factor from AP-42 (8/04), Table 11.19.2-2, for Total PM, Conveyor Transfer Point (controlled). Controls for emissions are assumed to be in place, per the requirements of IDAPA 58.01.01.808.01. EF expressed in pounds of PM per ton of aggregate.

2) PM-10: Emission factor from AP-42 (8/04), Table 11.19.2-2, for Total PM-10, Conveyor Transfer Point (controlled). Controls for emissions are assumed to be in place, per the requirements of IDAPA 58.01.01.808.01. EF expressed in pounds of PM-10 per ton of aggregate.

3) PM-2.5: Emission factor from AP-42 (8/04), Table 11.19.2-2, for Total PM-2.5, Conveyor Transfer Point (controlled). Controls for emissions are assumed to be in place, per the requirements of IDAPA 58.01.01.808.01. EF expressed in pounds of PM-2.5 per ton of aggregate.

3. AGGREGATE SCREENING

Screens:	1

Potential To Emit - Criteria Pollutants

Criteria Pollutant	EF	lb/hr	T/yr	Max 24hr Ave lb/hr	Max Annual Ave lb/hr
PM	0.0022	0.84	1.01	0.44	0.23
PM10	0.00074	0.28	0.34	0.15	0.08
PM2.5	0.000050	0.02	0.02	0.01	0.01

Emission Factor Information:

1) Particulate Matter: Emission factor from AP-42 (8/04), Table 11.19.2-2, for Total PM, Screening (controlled). Controls for emissions are assumed to be in place, per the requirements of IDAPA 58.01.01.808.01. EF expressed in pounds of PM per ton of aggregate.

2) PM-10: Emission factor from AP-42 (8/04), Table 11.19.2-2, for Total PM-10, Screening (controlled). Controls for emissions are assumed to be in place, per the requirements of IDAPA 58.01.01.808.01. EF expressed in pounds of PM-10 per ton of aggregate.

3) PM-2.5: Emission factor from AP-42 (8/04), Table 11.19.2-2, for Total PM-2.5, Screening (controlled). Controls for emissions are assumed to be in place, per the requirements of IDAPA 58.01.01.808.01. EF expressed in pounds of PM-2.5 per ton of aggregate.

Potential To Emit - Criteria Pollutants

Criteria Pollutant	HMA Drum Dryer		Asphalt Heater		Operations Generator		Night Generator		Storage Tanks		Silo Filling		Loadout		TOTAL	
	lb/hr	T/yr	lb/hr	T/yr	lb/hr	T/yr	lb/hr	T/yr	lb/hr	T/yr	lb/hr	T/yr	lb/hr	T/yr	lb/hr	T/yr
CO	52.47	62.64	0.04	0.18	6.90	8.90	0.55	2.41	0.02	0.03	0.00	0.00	0.54	0.64	60.53	74.80
CO2e	13612.16	16369.54	100.30	439.33	1387.43	1788.74	76.92	336.89	0.01	0.01	0.00	0.00	2.27	2.71	15179.09	18937.23
NOx	22.00	26.26	0.07	0.31	12.60	16.24	0.83	3.62	0.00	0.00	0.00	0.00	0.00	0.00	35.50	46.44
SO2	23.20	27.70	0.19	0.84	0.01	0.02	0.00	0.00	0.00	0.00	0.00	0.00	0.00	0.00	23.40	28.55
PM	13.43	16.04	0.20	0.88	0.39	0.51	0.04	0.19	0.00	0.00	0.00	0.00	0.21	0.25	14.28	17.87
PM10	9.43	11.26	0.17	0.76	0.39	0.51	0.04	0.19	0.00	0.00	0.00	0.00	0.21	0.25	10.26	12.97
PM2.5	4.63	5.53	0.01	0.03	0.47	0.60	0.04	0.19	0.00	0.00	0.00	0.00	0.21	0.25	5.36	6.60
VOC	17.68	21.11	0.01	0.02	2.56	3.30	0.17	0.74	0.29	0.35	0.00	0.00	1.56	1.87	22.27	27.39
Lead	0.01	0.01	0.00	0.01	0.00	0.00	0.00	0.00	0.00	0.00	0.00	0.00	0.00	0.00	0.01	0.01

Potential To Emit - **Non-carcinogen Toxic Air Pollutants**

Non-carcinogen TAP	HMA Drum Dryer		Asphalt Heater		Operations Generator		Night Generator		Asphalt Storage Tank		Silo Filling		Loadout		TOTAL	
	lb/hr	T/yr	lb/hr	T/yr	lb/hr	T/yr	lb/hr	T/yr	lb/hr	T/yr	lb/hr	T/yr	lb/hr	T/yr	lb/hr	T/yr
Acetone	3.35E-01	4.00E-01							1.21E-04	1.45E-04	0.00E+00	0.00E+00	7.65E-04	9.14E-04	3.36E-01	4.01E-01
Acrolein	1.04E-02	1.24E-02			6.62E-05	8.53E-05	4.34E-05	1.90E-04							1.05E-02	1.27E-02
Antimony	7.20E-05	8.60E-05	1.61E-05	7.04E-05											8.81E-05	1.56E-04
Barium	2.32E-03	2.77E-03	2.16E-06	9.45E-06											2.32E-03	2.78E-03
Bromomethane	2.39E-04	2.85E-04							1.08E-05	1.29E-05	0.00E+00	0.00E+00	1.60E-04	1.91E-04	4.10E-04	4.89E-04
Carbon Disulfide	7.81E-04	9.32E-04							3.53E-05	4.21E-05	0.00E+00	0.00E+00	2.16E-04	2.58E-04	1.03E-03	1.23E-03
Chloroethane/Ethyl chloride	1.95E-04	2.33E-04							8.82E-06	1.05E-05	0.00E+00	0.00E+00	3.49E-06	4.17E-06	2.08E-04	2.48E-04
Chloromethane/Methyl chloride	1.12E-03	1.34E-03							5.07E-05	6.06E-05	0.00E+00	0.00E+00	2.50E-04	2.98E-04	1.42E-03	1.70E-03
Chromium	2.20E-03	2.63E-03	6.43E-04	2.82E-03											2.84E-03	5.44E-03
Cobalt	1.04E-05	1.24E-05	1.86E-05	8.13E-05											2.90E-05	9.38E-05
Copper	1.24E-03	1.48E-03	3.00E-06	1.31E-05											1.24E-03	1.49E-03
Crotonaldehyde	3.44E-02	4.11E-02													3.44E-02	4.11E-02
Cumene													1.83E-03	2.19E-03	1.83E-03	2.19E-03
Dichlorobenzene			5.88E-07	2.58E-06											5.88E-07	2.58E-06
Ethyl Benzene	9.79E-02	1.17E-01							8.38E-05	1.00E-04	0.00E+00	0.00E+00	4.66E-03	5.56E-03	1.03E-01	1.22E-01
Heptane	3.76E+00	4.49E+00													3.76E+00	4.49E+00
Hexane	3.73E-01	4.45E-01	8.82E-04	3.86E-03					2.21E-04	2.63E-04	0.00E+00	0.00E+00	2.50E-03	2.98E-03	3.76E-01	4.52E-01
Hydrochloric Acid	8.40E-02	1.00E-01	2.36E-02	1.03E-01											1.08E-01	2.04E-01
Manganese	3.08E-03	3.68E-03	1.79E-04	7.82E-04											3.26E-03	4.46E-03
Mercury	1.04E-03	1.24E-03	1.50E-06	6.57E-06											1.04E-03	1.25E-03
Methyl Chloroform	1.92E-02	2.29E-02													1.92E-02	2.29E-02
Methyl Ethyl Ketone	9.90E-03	1.18E-02							8.60E-05	1.03E-04	0.00E+00	0.00E+00	8.15E-04	9.73E-04	1.08E-02	1.29E-02
Molybdenum			5.39E-07	2.36E-06											5.39E-07	2.36E-06
Naphthalene	2.62E-01	3.13E-01	6.07E-05	2.66E-04	1.09E-03	1.41E-03	3.98E-05	1.74E-04			0.00E+00	0.00E+00	1.71E-03	2.04E-03	2.65E-01	3.16E-01
n-Pentane	8.40E-02	1.00E-01	1.27E-03	5.58E-03											8.53E-02	1.06E-01
Phenol	0.00E+00	0.00E+00	1.00E-07	4.38E-07							0.00E+00	0.00E+00	1.61E-03	1.92E-03	1.61E-03	1.92E-03
Phosphorus	1.12E-02	1.34E-02													1.12E-02	1.34E-02
Propionaldehyde	5.20E-02	6.21E-02													5.20E-02	6.21E-02
Quinone	6.40E-02	7.64E-02													6.40E-02	7.64E-02
Selenium	1.40E-04	1.67E-04	7.50E-06	3.29E-05											1.48E-04	2.00E-04
Silver	1.92E-04	2.29E-04													1.92E-04	2.29E-04
Styrene	2.64E-04	3.15E-04							1.19E-05	1.42E-05	0.00E+00	0.00E+00	1.21E-04	1.45E-04	3.97E-04	4.74E-04
Thallium	1.64E-06	1.96E-06													1.64E-06	1.96E-06
Toluene	1.16E+00	1.39E+00	1.67E-05	7.30E-05	2.36E-03	3.04E-03	1.92E-04	8.40E-04	1.37E-04	1.63E-04	0.00E+00	0.00E+00	3.49E-03	4.17E-03	1.17E+00	1.40E+00
Valeraldehyde	2.68E-02	3.20E-02													2.68E-02	3.20E-02
Vanadium			1.13E-06	4.94E-06											1.13E-06	4.94E-06
Xylenes	9.25E-02	1.10E-01			1.62E-03	2.09E-03	1.34E-04	5.85E-04	5.67E-04	6.77E-04	0.00E+00	0.00E+00	8.15E-03	9.73E-03	1.03E-01	1.24E-01
Zinc	2.44E-02	2.91E-02	1.42E-05	6.23E-05											2.44E-02	2.92E-02

Potential To Emit - Carcinogen Toxic Air Pollutants

Carcinogen TAP	HMA Drum Dryer		Asphalt Heater		Operations Generator		Night Generator		Asphalt Storage Tank		Silo Filling		Loadout		TOTAL	
	lb/hr	T/yr	lb/hr	T/yr	lb/hr	T/yr	lb/hr	T/yr	lb/hr	T/yr	lb/hr	T/yr	lb/hr	T/yr	lb/hr	T/yr
Acenaphthene	1.04E-03	1.24E-03	1.89E-06	8.29E-06	3.93E-05	5.07E-05	6.66E-07	2.92E-06			0.00E+00	0.00E+00	3.55E-04	4.23E-04	1.43E-03	1.72E-03
Acenaphthylene	8.81E-03	1.05E-02	7.14E-07	3.13E-06	7.75E-05	1.00E-04	2.37E-06	1.04E-05			0.00E+00	0.00E+00	3.82E-05	4.56E-05	8.93E-03	1.07E-02
Acetaldehyde	5.20E-01	6.21E-01			2.12E-04	2.73E-04	3.60E-04	1.58E-03							5.21E-01	6.23E-01
Anthracene	1.37E-03	1.64E-03	6.43E-07	2.82E-06	1.03E-05	1.33E-05	8.77E-07	3.84E-06			0.00E+00	0.00E+00	9.55E-05	1.14E-04	1.48E-03	1.77E-03
Arsenic	2.24E-04	2.67E-04	2.14E-04	9.39E-04											4.38E-04	1.21E-03
Benzene	1.58E-01	1.88E-01	1.03E-06	4.51E-06	6.52E-03	8.40E-03	4.38E-04	1.92E-03	7.06E-05	8.43E-05	0.00E+00	0.00E+00	8.65E-04	1.03E-03	1.65E-01	2.00E-01
Benzo(a)pyrene	3.92E-06	4.68E-06	1.43E-05	6.26E-05	2.16E-06	2.78E-06	8.82E-08	3.86E-07			0.00E+00	0.00E+00	3.14E-06	3.75E-06	2.36E-05	7.42E-05
Benzo(g,h,i)perylene	1.60E-05	1.91E-05	5.88E-10	2.58E-09	4.67E-06	6.02E-06	2.29E-07	1.00E-06			0.00E+00	0.00E+00	2.59E-06	3.09E-06	2.35E-05	2.92E-05
Benzo(e)pyrene	5.37E-05	6.40E-05									0.00E+00	0.00E+00	1.06E-05	1.27E-05	6.43E-05	7.67E-05
Beryllium	0.00E+00	0.00E+00	6.43E-06	2.82E-05											6.43E-06	2.82E-05
Bis(2-ethylhexyl)phthalate			7.86E-06	3.44E-05											7.86E-06	3.44E-05
1,3-Butadiene							1.83E-05	8.03E-05							1.83E-05	8.03E-05
Cadmium	1.64E-04	1.96E-04	4.29E-05	1.88E-04											2.07E-04	3.83E-04
Chloromethane/Methyl chloride	1.12E-03	1.34E-03							5.07E-05	6.06E-05	0.00E+00	0.00E+00	2.50E-04	2.98E-04	1.42E-03	1.70E-03
Hexavalent Chromium	1.80E-04	2.15E-04													1.80E-04	2.15E-04
Total Dioxin/Furans	4.80E-08	5.73E-08	8.21E-10	3.60E-09											4.88E-08	6.09E-08
Fluoranthene	3.96E-04	4.73E-04	1.57E-07	6.88E-07	3.39E-05	4.36E-05	3.57E-06	1.56E-05			0.00E+00	0.00E+00	6.82E-05	8.14E-05	5.02E-04	6.15E-04
Fluorene	5.43E-03	6.48E-03	1.14E-07	5.01E-07	1.08E-04	1.39E-04	1.37E-05	6.00E-05			0.00E+00	0.00E+00	1.05E-03	1.25E-03	6.60E-03	7.93E-03
Formaldehyde	1.27E+00	1.52E+00	2.18E-04	9.54E-04	6.63E-04	8.54E-04	5.53E-04	2.42E-03	1.52E-03	1.82E-03	0.00E+00	0.00E+00	1.46E-03	1.75E-03	1.28E+00	1.53E+00
3-Methylchloranthrene			8.82E-10	3.86E-09											8.82E-10	3.86E-09
Methylene Chloride/Dichloromethane	1.32E-05	1.57E-05							5.96E-07	7.11E-07	0.00E+00	0.00E+00	0.00E+00	0.00E+00	1.38E-05	1.64E-05
2-Methylnaphthalene	7.34E-02	8.76E-02	1.18E-08	5.15E-08							0.00E+00	0.00E+00	3.25E-03	3.88E-03	7.66E-02	9.14E-02
Naphthalene	2.62E-01	3.13E-01	6.07E-05	2.66E-04	1.09E-03	1.41E-03	3.98E-05	1.74E-04			0.00E+00	0.00E+00	1.71E-03	2.04E-03	2.65E-01	3.16E-01
Nickel	2.52E-02	3.01E-02	5.71E-04	2.50E-03											2.58E-02	3.26E-02
Perylene	3.40E-05	4.06E-05									0.00E+00	0.00E+00	3.00E-05	3.58E-05	6.40E-05	7.64E-05
Phenanthrene	1.10E-02	1.32E-02	1.75E-05	7.67E-05	3.43E-04	4.42E-04	1.38E-05	6.04E-05			0.00E+00	0.00E+00	1.10E-03	1.32E-03	1.25E-02	1.51E-02
POM	4.89E-04	5.84E-04	4.29E-05	1.88E-04	3.77E-05	4.86E-05	1.61E-06	7.05E-06			0.00E+00	0.00E+00	1.84E-04	2.20E-04	7.56E-04	1.05E-03
Pyrene	1.65E-03	1.97E-03	1.14E-07	5.01E-07	3.12E-05	4.02E-05	2.24E-06	9.82E-06			0.00E+00	0.00E+00	2.05E-04	2.44E-04	1.89E-03	2.26E-03
2,3,7,8-TCDD	8.40E-11	1.00E-10													8.40E-11	1.00E-10
Tetrachloroethene/ Tetrachloroethylene													1.28E-04	1.53E-04	1.28E-04	1.53E-04
Trichloroethene/ Trichloroethylene													0.00E+00	0.00E+00	0.00E+00	0.00E+00

Potential To Emit - CAA Hazardous Air Pollutants

HAP	HMA Drum Dryer		Asphalt Heater		Operations Generator		Night Generator		Asphalt Storage Tank		Silo Filling[2]		Loadout		TOTAL	
	lb/hr	T/yr	lb/hr	T/yr	lb/hr	T/yr	lb/hr	T/yr	lb/hr	T/yr	lb/hr	T/yr	lb/hr	T/yr	lb/hr	T/yr
Acenaphthene	5.60E-04	6.69E-04	1.89E-06	8.29E-06	3.93E-05	5.07E-05	6.66E-07	2.92E-06			4.78E-04	5.70E-04	3.55E-04	4.23E-04	0.0014	0.0017
Acenaphthylene	8.80E-03	1.05E-02	7.14E-07	3.13E-06	7.75E-05	1.00E-04	2.37E-06	1.04E-05			1.42E-05	1.70E-05	3.82E-05	4.56E-05	0.0089	0.0107
Acetaldehyde	5.20E-01	6.21E-01	0.00E+00	0.00E+00	2.12E-04	2.73E-04	3.60E-04	1.58E-03							0.5206	0.6226
Acrolein	1.04E-02	1.24E-02	0.00E+00	0.00E+00	6.62E-05	8.53E-05	4.34E-05	1.90E-04							0.0105	0.0127
Antimony	7.20E-05	8.60E-05	1.61E-05	7.04E-05											0.0001	0.0002
Anthracene	1.24E-03	1.48E-03	6.43E-07	2.82E-06	1.03E-05	1.33E-05	8.77E-07	3.84E-06			1.32E-04	1.58E-04	9.55E-05	1.14E-04	0.0015	0.0018
Arsenic	2.24E-04	2.67E-04	2.14E-04	9.39E-04											0.0004	0.0012
Benzene	1.56E-01	1.86E-01	1.03E-06	4.51E-06	6.52E-03	8.40E-03	4.38E-04	1.92E-03	7.06E-05	8.43E-05	1.56E-03	1.86E-03	8.65E-04	1.03E-03	0.1655	0.1995
Benzo(a)anthracene	8.40E-05	1.00E-04	1.43E-05	6.26E-05	5.22E-06	6.74E-06	7.88E-07	3.45E-06			5.69E-05	6.79E-05	2.59E-05	3.09E-05	0.0002	0.0003
Benzo(a)pyrene	3.92E-06	4.68E-06	1.43E-05	6.26E-05	2.16E-06	2.78E-06	8.82E-08	3.86E-07			0.00E+00	0.00E+00	3.14E-06	3.75E-06	0.0000	0.0001
Benzo(b)fluoranthene	4.00E-05	4.78E-05	3.57E-07	1.56E-06	9.32E-06	1.20E-05	4.65E-08	2.04E-07			0.00E+00	0.00E+00	1.04E-05	1.24E-05	0.0001	0.0001
Benzo(e)pyrene	4.40E-05	5.25E-05	0.00E+00	0.00E+00							9.65E-06	1.15E-05	1.06E-05	1.27E-05	0.0001	0.0001
Benzo(g,h,i)perylene	1.60E-05	1.91E-05	5.88E-10	2.58E-09	4.67E-06	6.02E-06	2.29E-07	1.00E-06			0.00E+00	0.00E+00	2.59E-06	3.09E-06	0.0000	0.0000
Benzo(k)fluoranthene	1.64E-05	1.96E-05	8.82E-10	3.86E-09	1.83E-06	2.36E-06	7.27E-08	3.18E-07			0.00E+00	0.00E+00	3.00E-06	3.58E-06	0.0000	0.0000
Beryllium	0.00E+00	0.00E+00	6.43E-06	2.82E-05											0.0000	0.0000
Bis(2-ethylhexyl)phthalate			7.86E-06	3.44E-05											0.0000	0.0000
Bromomethane									1.08E-05	1.29E-05	2.39E-04	2.85E-04	1.60E-04	1.91E-04	0.0004	0.0005
1,3-Butadiene	0.00E+00	0.00E+00	0.00E+00	0.00E+00			1.83E-05	8.03E-05							0.0000	0.0001
Cadmium	1.64E-04	1.96E-04	4.29E-05	1.88E-04											0.0002	0.0004
Carbon Disulfide	0.00E+00	0.00E+00	0.00E+00	0.00E+00					3.53E-05	4.21E-05	7.81E-04	9.32E-04	2.16E-04	2.58E-04	0.0010	0.0012
Chloroethane/Ethyl Chloride									8.82E-06	1.05E-05	1.95E-04	2.33E-04	3.49E-06	4.17E-06	0.0002	0.0002
Chloromethane/Methyl chloride									5.07E-05	6.06E-05	1.12E-03	1.34E-03	2.50E-04	2.98E-04	0.0014	0.0017
Chromium	2.20E-03	2.63E-03	6.43E-04	2.82E-03											0.0028	0.0054
Hexavalent Chromium	1.80E-04	2.15E-04	0.00E+00	0.00E+00											0.0002	0.0002
Chrysene	7.20E-05	8.60E-05	1.43E-05	6.26E-05	1.28E-05	1.65E-05	1.66E-07	7.25E-07			2.13E-04	2.55E-04	1.40E-04	1.68E-04	0.0005	0.0006
Cobalt	1.04E-05	1.24E-05	1.86E-05	8.13E-05											0.0000	0.0001
Cumene	0.00E+00	0.00E+00	0.00E+00	0.00E+00									1.83E-03	2.19E-03	0.0018	0.0022
Dibenzo(a,h)anthracene	0.00E+00	0.00E+00	5.88E-10	2.58E-09	2.91E-06	3.75E-06	2.73E-07	1.20E-06			0.00E+00	0.00E+00	5.05E-07	6.02E-07	0.0000	0.0000
Dibutylphthalate			1.21E-07	5.32E-07											0.0000	0.0000
Dichlorobenzene	0.00E+00	0.00E+00	5.88E-07	2.58E-06											0.0000	0.0000
Ethyl Benzene	9.60E-02	1.15E-01	0.00E+00	0.00E+00					8.38E-05	1.00E-04	1.85E-03	2.21E-03	4.66E-03	5.56E-03	0.1026	0.1225
Fluoranthene	2.44E-04	2.91E-04	1.57E-07	6.88E-07	3.39E-05	4.36E-05	3.57E-06	1.56E-05			1.52E-04	1.82E-04	6.82E-05	8.14E-05	0.0005	0.0006
Fluorene	4.40E-03	5.25E-03	1.14E-07	5.01E-07	1.08E-04	1.39E-04	1.37E-05	6.00E-05			1.03E-03	1.22E-03	1.05E-03	1.25E-03	0.0066	0.0079
Formaldehyde	1.24E+00	1.48E+00	2.18E-04	9.54E-04	6.63E-04	8.54E-04	5.53E-04	2.42E-03	1.52E-03	1.82E-03	3.37E-02	4.02E-02	1.46E-03	1.75E-03	1.2781	1.5282
Hexane	3.68E-01	4.39E-01	8.82E-04	3.86E-03					2.21E-04	2.63E-04	4.88E-03	5.83E-03	2.50E-03	2.98E-03	0.3765	0.4522
HCl	8.40E-02	1.00E-01	2.36E-02	1.03E-01											0.1076	0.2035
Indeno(1,2,3-cd)pyrene	2.80E-06	3.34E-06	8.82E-10	3.86E-09	3.48E-06	4.48E-06	1.76E-07	7.70E-07			0.00E+00	0.00E+00	6.41E-07	7.65E-07	0.0000	0.0000
Lead	6.00E-03	7.16E-03	1.79E-03	7.82E-03											0.0078	0.0150
Manganese	3.08E-03	3.68E-03	1.79E-04	7.82E-04											0.0033	0.0045
Mercury	1.04E-03	1.24E-03	1.50E-06	6.57E-06											0.0010	0.0012
Methyl Chloroform	1.92E-02	2.29E-02	0.00E+00	0.00E+00									0.00E+00	0.00E+00	0.0192	0.0229
Methyl Ethyl Ketone	8.00E-03	9.55E-03	0.00E+00	0.00E+00					8.60E-05	1.03E-04	1.90E-03	2.27E-03	8.15E-04	9.73E-04	0.0108	0.0129
Methylene Chloride/Dichloromethane									5.96E-07	7.11E-07	1.32E-05	1.57E-05			0.0000	0.0000
2-Methylnaphthalene	6.80E-02	8.12E-02	8.82E-10	3.86E-09							5.35E-03	6.39E-03	3.25E-03	3.88E-03	0.0766	0.0914
3-Methylchloranthrene	0.00E+00	0.00E+00	1.18E-08	5.15E-08											0.0000	0.0000
Naphthalene	2.60E-01	3.10E-01	6.07E-05	2.66E-04	1.09E-03	1.41E-03	3.98E-05	1.74E-04			1.85E-03	2.21E-03	1.71E-03	2.04E-03	0.2647	0.3165
Nickel	2.52E-02	3.01E-02	5.71E-04	2.50E-03											0.0258	0.0326
Pentane	0.00E+00	0.00E+00	1.27E-03	5.58E-03											0.0013	0.0056
Perylene	3.52E-06	4.20E-06	0.00E+00	0.00E+00							3.05E-05	3.64E-05	3.00E-05	3.58E-05	0.0001	0.0001
Phenanthrene	9.20E-03	1.10E-02	1.75E-05	7.67E-05	3.43E-04	4.42E-04	1.38E-05	6.04E-05			1.83E-03	2.18E-03	1.10E-03	1.32E-03	0.0125	0.0151
Phenol			1.00E-07	4.38E-07							0.00E+00	0.00E+00	1.61E-03	1.92E-03	0.0016	0.0019
Phosphorus	1.12E-02	1.34E-02	0.00E+00	0.00E+00											0.0112	0.0134
POM	3.54E-01	4.22E-01	1.25E-04	5.48E-04	1.78E-03	2.29E-03	7.88E-05	3.45E-04			1.16E-02	1.38E-02	8.09E-03	9.66E-03	0.3756	0.4492
Propionaldehyde	5.20E-02	6.21E-02	0.00E+00	0.00E+00											0.0520	0.0621
Pyrene	1.20E-03	1.43E-03	1.14E-07	5.01E-07	3.12E-05	4.02E-05	2.24E-06	9.82E-06			4.47E-04	5.34E-04	2.05E-04	2.44E-04	0.0019	0.0023
Quinone	6.40E-02	7.64E-02													0.0640	0.0764
Selenium	1.40E-04	1.67E-04	7.50E-06	3.29E-05											0.0001	0.0002
Styrene	0.00E+00	0.00E+00	0.00E+00	0.00E+00					1.19E-05	1.42E-05	2.64E-04	3.15E-04	1.21E-04	1.45E-04	0.0004	0.0005
2,3,7,8-TCDD	8.40E-11	1.00E-10	0.00E+00	0.00E+00											0.0000	0.0000
Tetrachloroethene/ Tetrachloroethylene													1.28E-04	1.53E-04	0.0001	0.0002
Toluene	1.16E+00	1.38E+00	1.67E-06	7.30E-06	2.36E-03	3.04E-03	1.92E-04	8.40E-04	1.37E-04	1.63E-04	3.03E-03	3.61E-03	3.49E-03	4.17E-03	1.1692	1.3966
Total PCDD/PCDF	4.80E-08	5.73E-08	8.21E-10	3.60E-09											0.0000	0.0000
Trichloroethene/ Trichloroethylene			0.00E+00	0.00E+00									0.00E+00	0.00E+00	0.0000	0.0000
Xylene	8.00E-02	9.55E-02	0.00E+00	0.00E+00	1.62E-03	2.09E-03	1.34E-04	5.85E-04	5.67E-04	6.77E-04	1.25E-02	1.50E-02	8.15E-03	9.73E-03	0.1030	0.1236
TOTALS:															4.42	5.37

1) POM & Total PCDD/PCDF: Maximum PTE estimates for POM based on polycyclic organic matter mixture as defined by 1900 CAA Amendments. Refer to individual unit emission estimates for compounds included in the mixture. To avoid double counting, the total, maximum PTE estimates do not include POM (i.e., individual compounds are summed separately) or 2, 3, 7, 8-TCDD (included in Total PCDD/PCDF).

2) Note that Silo Filling emissions are actually routed through the Drum Dryer/Baghouse. Presented seperately here for HAP threshold assessment purposes only.

APPENDIX 4

Emissions Inventory at 450 T/hr Production

Emission Unit:	Drum Dryer
Manufacturer /Model:	Gencor, Model 400 Portable Insulated Ultradrum with Ultra II-
Production capacity (T/hr):	450
Burner capacity (MMBTU/hr):	135
Fuel Type(s):	RFO, #2 Diesel, natural gas, or propane
Daily Hours of Operation (hr/d)	12.5
Max Daily Production (T/d)	5625
Annual Hours of Operation (hr/yr):	2387.5
Max Annual Production (T/yr):	1074375

RFO and Diesel (MMBTU/1000 gallons):		140	(AP-42, App A)
Nat. gas (BTU/scf):		1020	(AP-42, Table 1.4-1, footnote (a))
Propane (MMBTU/1000 gallons):		91.5	(AP-42, Table 1.5-1, footnote (a))
Propane (BTU/scf):		2504	(http://www.engineeringtoolbox.com/fuel-gases-combustion-values-d_510.html)

Control Equipment:	Gencor Baghouse, Model CFP-182

Potential To Emit - Criteria Pollutants

Criteria Pollutant	RFO			#2 Diesel			Nat. Gas			Propane			Max lb/hr	Max T/yr	Max 24hr Ave lb/hr	Max Annual Ave lb/hr
	EF	lb/hr	T/yr	EF	lb/hr	T/yr	EF	lb/hr	T/yr	EF	lb/hr	T/yr				
CO	0.13	58.50	69.83	0.13	58.50	69.83	0.13	58.500	69.83	0.13	58.500	69.83	58.50	69.83	30.47	15.94
CO2e		15041.12	17955.34		15041.12	17955.34		15053.66	17970.31		15261.89	18353.95	15261.89	18353.95	7948.90	4159.56
NOx	0.055	24.75	29.55	0.055	24.75	29.55	0.026	11.700	13.97	0.039	17.550	20.95	24.75	29.55	12.89	6.75
SO2	0.058	26.10	31.16	0.011	4.95	5.91	0.0034	1.530	1.83	0.0034	1.530	1.83	26.10	31.16	13.59	7.11
PM	0.033	14.85	17.73	0.033	14.85	17.73	0.033	14.850	17.73	0.033	14.850	17.73	14.85	17.73	7.73	4.05
PM10	0.023	10.35	12.36	0.023	10.35	12.36	0.023	10.350	12.36	0.023	10.350	12.36	10.35	12.36	5.39	2.82
PM2.5		4.95	5.90		4.95	5.90		4.95	5.90		4.95	5.90	4.95	5.90	2.58	1.35
VOC	0.032	14.40	17.19	0.032	14.40	17.19	0.032	14.400	17.19	0.032	14.400	17.19	14.40	17.19	7.50	3.92
Lead	0.000015	0.01	0.01	0.000015	0.01	0.01	6.2E-07	0.00	0.00	6.2E-07	0.00	0.00	0.01	0.01	0.00	0.00

Emission Factor Information:

1) Carbon Monoxide: Emission factors from AP-42 (3/04), Table 11.1-7. For propane, the EF for natural gas combustion was applied. EFs are expressed in pounds of CO per ton of HMA produced.

2) Carbon Dioxide Equivalent: Refer to Greenhouse Gases table for calculation methodology.

3) Nitrogen Oxides: Emission factors from AP-42 (3/04), Table 11.1-7. For propane, the NOx EF for natural gas has been multiplied by a factor of 1.5, per footnote (a) from Table 1.5-1, Emission Factors for LPG Combustion (i.e., "The NOx emission factors have been multiplied by a factor of 1.5, which is the approximate ratio of propane/butane NOx emissions to natural gas Nox emissions."). EFs expressed in pounds of NOx per ton of HMA produced.

4) Sulfur Dioxide: Emission factors from AP-42 (3/04), Table 11.1-7. For propane, the EF for natural gas combustion was applied. EFs are expressed in pounds of SOx per ton of HMA produced.

5) Particulate Matter: Emission factors based on AP-42 (3/04), Table 11.1-3, for fabric filter and Total PM. EFs are expressed in pounds of PM-10 per ton of HMA produced.

6) PM-10: Emission factors based on AP-42 (3/04), Table 11.1-3, for fabric filter and Total PM-10. EFs are expressed in pounds of PM-10 per ton of HMA produced.

7) PM-2.5: Emission factors based on AP-42 (3/04), Table 11.1-3, for fabric filter and Total PM. To derive PM2.5, a speciation factor of 0.333 was applied (California Air Resources Board, 7/2009). EFs are expressed in pounds of PM-2.5 per ton of HMA produced.

8) VOC: Emission factors from AP-42 (3/04), Table 11.1-8. For propane, the EF for natural gas combustion was applied. EFs are expressed in pounds of VOC per ton of HMA produced.

9) Lead: Emission factors from AP-42 (3/04), Table 11.1-12, for fabric filter. EFs are expressed in pounds of Pb per ton of HMA produced.

Potential To Emit - **Non-Carcinogenic TAPs**

Non-Carcinogen TAP	RFO			#2 Diesel			Nat. Gas			Propane			Max lb/hr	Max T/yr	Max 24hr Ave lb/hr	Max Annual Ave lb/hr
	EF	lb/hr	T/yr	EF	lb/hr	T/yr	EF	lb/hr	T/yr	EF	lb/hr	T/yr				
Acetone	8.3E-04	3.7E-01	4.5E-01		0.0E+00	0.0E+00		0.0E+00	0.0E+00		0.0E+00	0.0E+00	3.74E-01	4.46E-01	1.95E-01	1.02E-01
Acrolein	2.6E-05	1.2E-02	1.4E-02		0.0E+00	0.0E+00		0.0E+00	0.0E+00		0.0E+00	0.0E+00	1.17E-02	1.40E-02	6.09E-03	3.19E-03
Antimony	1.8E-07	8.1E-05	9.7E-05	1.8E-07	8.1E-05	9.7E-05	1.8E-07	8.1E-05	9.7E-05	1.8E-07	8.1E-05	9.7E-05	8.10E-05	9.67E-05	4.22E-05	2.21E-05
Barium	5.8E-67	2.6E-64	3.1E-64	5.8E-06	2.6E-03	3.1E-03	5.8E-06	2.6E-03	3.1E-03	5.8E-06	2.6E-03	3.1E-03	2.61E-03	3.12E-03	1.36E-03	7.11E-04
Chromium	5.5E-06	2.5E-03	3.0E-03	5.5E-06	2.5E-03	3.0E-03	5.5E-06	2.5E-03	3.0E-03	5.5E-06	2.5E-03	3.0E-03	2.48E-03	2.98E-03	1.29E-03	6.75E-04
Cobalt	2.6E-08	1.2E-05	1.4E-05	2.6E-08	1.2E-05	1.4E-05	2.6E-08	1.2E-05	1.4E-05	2.6E-08	1.2E-05	1.4E-05	1.2E-05	1.4E-05	6.1E-06	3.2E-06
Copper	3.1E-06	1.4E-03	1.7E-03	3.1E-06	1.4E-03	1.7E-03	3.1E-06	1.4E-03	1.7E-03	3.1E-06	1.4E-03	1.7E-03	1.4E-03	1.7E-03	7.3E-04	3.8E-04
Crotonaldehyde	8.6E-05	3.9E-02	4.6E-02		0.0E+00	0.0E+00		0.0E+00	0.0E+00		0.0E+00	0.0E+00	3.87E-02	4.62E-02	2.02E-02	1.05E-02
Ethyl Benzene	2.4E-04	1.1E-01	1.3E-01	2.4E-04	1.1E-01	1.3E-01	2.4E-04	1.1E-01	1.3E-01	2.4E-04	1.1E-01	1.3E-01	1.08E-01	1.29E-01	5.63E-02	2.94E-02
Heptane	9.4E-03	4.2E+00	5.0E+00	9.4E-03	4.2E+00	5.0E+00	9.4E-03	4.2E+00	5.0E+00	9.4E-03	4.2E+00	5.0E+00	4.23E+00	5.05E+00	2.20E+00	1.15E+00
Hexane	9.2E-04	4.1E-01	4.9E-01	9.2E-04	4.1E-01	4.9E-01	9.2E-04	4.1E-01	4.9E-01	9.2E-04	4.1E-01	4.9E-01	4.14E-01	4.94E-01	2.16E-01	1.13E-01
Hydrochloric Acid	2.1E-04	9.5E-02	1.1E-01		0.0E+00	0.0E+00		0.0E+00	0.0E+00		0.0E+00	0.0E+00	9.5E-02	1.1E-01	4.9E-02	2.6E-02
Manganese	7.7E-06	3.5E-03	4.1E-03	7.7E-06	3.5E-03	4.1E-03	7.7E-06	3.5E-03	4.1E-03	7.7E-06	3.5E-03	4.1E-03	3.5E-03	4.1E-03	1.8E-03	9.4E-04
Mercury	2.6E-06	1.2E-03	1.4E-03	2.6E-06	1.2E-03	1.4E-03	2.4E-07	1.1E-04	1.3E-04	2.4E-07	1.1E-04	1.3E-04	1.2E-03	1.4E-03	6.1E-04	3.2E-04
Methyl Chloroform	4.8E-05	2.2E-02	2.6E-02	4.8E-05	2.2E-02	2.6E-02	4.8E-05	2.2E-02	2.6E-02	4.8E-05	2.2E-02	2.6E-02	2.16E-02	2.58E-02	1.13E-02	5.89E-03
Methyl Ethyl Ketone	2.0E-05	9.0E-03	1.1E-02		0.0E+00	0.0E+00		0.0E+00	0.0E+00		0.0E+00	0.0E+00	9.00E-03	1.07E-02	4.69E-03	2.45E-03
Naphthalene	6.5E-04	2.9E-01	3.5E-01	6.5E-04	2.9E-01	3.5E-01	9.0E-05	4.1E-02	4.8E-02	9.0E-05	4.1E-02	4.8E-02	2.93E-01	3.49E-01	1.52E-01	7.97E-02
n-Pentane	2.1E-04	9.5E-02	1.1E-01	2.1E-04	9.5E-02	1.1E-01	2.1E-04	9.5E-02	1.1E-01	2.1E-04	9.5E-02	1.1E-01	9.45E-02	1.13E-01	4.92E-02	2.58E-02
Phosphorus	2.8E-05	1.3E-02	1.5E-02	2.8E-05	1.3E-02	1.5E-02	2.8E-05	1.3E-02	1.5E-02	2.8E-05	1.3E-02	1.5E-02	1.26E-02	1.50E-02	6.56E-03	3.43E-03
Propionaldehyde	1.3E-04	5.9E-02	7.0E-02		0.0E+00	0.0E+00		0.0E+00	0.0E+00		0.0E+00	0.0E+00	5.85E-02	6.98E-02	3.05E-02	1.59E-02
Quinone	1.6E-04	7.2E-02	8.6E-02		0.0E+00	0.0E+00		0.0E+00	0.0E+00		0.0E+00	0.0E+00	7.20E-02	8.60E-02	3.75E-02	1.96E-02
Selenium	3.5E-07	1.6E-04	1.9E-04	3.5E-07	1.6E-04	1.9E-04	3.5E-07	1.6E-04	1.9E-04	3.5E-07	1.6E-04	1.9E-04	1.58E-04	1.88E-04	8.20E-05	4.29E-05
Silver	4.8E-07	2.2E-04	2.6E-04	4.8E-07	2.2E-04	2.6E-04	4.8E-07	2.2E-04	2.6E-04	4.8E-07	2.2E-04	2.6E-04	2.16E-04	2.58E-04	1.13E-04	5.89E-05
Thallium	4.1E-09	1.8E-06	2.2E-06	4.1E-09	1.8E-06	2.2E-06	4.1E-09	1.8E-06	2.2E-06	4.1E-09	1.8E-06	2.2E-06	1.85E-06	2.20E-06	9.61E-07	5.03E-07
Toluene	2.9E-03	1.3E+00	1.6E+00	2.9E-03	1.3E+00	1.6E+00	1.5E-04	6.8E-02	8.1E-02	1.5E-04	6.8E-02	8.1E-02	1.31E+00	1.56E+00	6.80E-01	3.56E-01
Valeraldehyde	6.7E-05	3.0E-02	3.6E-02		0.0E+00	0.0E+00		0.0E+00	0.0E+00		0.0E+00	0.0E+00	3.02E-02	3.60E-02	1.57E-02	8.22E-03
Xylene	2.0E-04	9.0E-02	1.1E-01	2.0E-04	9.0E-02	1.1E-01	2.0E-04	9.0E-02	1.1E-01	2.0E-04	9.0E-02	1.1E-01	9.00E-02	1.07E-01	4.69E-02	2.45E-02
Zinc	6.1E-05	2.7E-02	3.3E-02	6.1E-05	2.7E-02	3.3E-02	6.1E-05	2.7E-02	3.3E-02	6.1E-05	2.7E-02	3.3E-02	2.75E-02	3.28E-02	1.43E-02	7.48E-03
TOTALS:			8.706			7.887			6.108			6.108	7.295	8.709		

Potential To Emit - **Carcinogenic TAPs**

Carcinogen TAP	RFO			#2 Diesel			Nat. Gas			Propane			Max lb/hr	Max T/yr	Max 24hr Ave lb/hr	Max Annual Ave lb/hr
	EF	lb/hr	T/yr	EF	lb/hr	T/yr	EF	lb/hr	T/yr	EF	lb/hr	T/yr				
Acenaphthene	1.4E-06	6.3E-04	7.5E-04	1.40E-06	6.3E-04	7.5E-04	1.40E-06	6.3E-04	7.5E-04	1.40E-06	6.3E-04	7.5E-04	6.30E-04	7.52E-04	3.28E-04	1.72E-04
Acenaphthylene	2.2E-05	9.9E-03	1.2E-02	2.20E-05	9.9E-03	1.2E-02	8.60E-06	3.9E-03	4.6E-03	8.60E-06	3.9E-03	4.6E-03	9.90E-03	1.18E-02	5.16E-03	2.70E-03
Acetaldehyde	1.3E-03	5.9E-01	7.0E-01		0.0E+00	0.0E+00		0.0E+00	0.0E+00		0.0E+00	0.0E+00	5.85E-01	6.98E-01	3.05E-01	1.59E-01
Anthracene	3.1E-06	1.4E-03	1.7E-03	3.1E-06	1.4E-03	1.7E-03	2.2E-07	9.9E-05	1.2E-04	2.2E-07	9.9E-05	1.2E-04	1.40E-03	1.67E-03	7.27E-04	3.80E-04
Arsenic	5.6E-07	2.5E-04	3.0E-04	5.6E-07	2.5E-04	3.0E-04	5.6E-07	2.5E-04	3.0E-04	5.6E-07	2.5E-04	3.0E-04	2.52E-04	3.01E-04	1.31E-04	6.87E-05
Benzene	3.9E-04	1.8E-01	2.1E-01	3.9E-04	1.8E-01	2.1E-01	3.9E-04	1.8E-01	2.1E-01	3.9E-04	1.8E-01	2.1E-01	1.76E-01	2.10E-01	9.14E-02	4.78E-02
Benzo(a)pyrene	9.80E-09	4.4E-06	5.3E-06	9.80E-09	4.4E-06	5.3E-06	9.80E-09	4.4E-06	5.3E-06	9.80E-09	4.4E-06	5.3E-06	4.41E-06	5.26E-06	2.30E-06	1.20E-06
Benzo(g,h,i)perylene	4.0E-08	1.8E-05	2.1E-05	4.0E-08	1.8E-05	2.1E-05	4.0E-08	1.8E-05	2.1E-05	4.0E-08	1.8E-05	2.1E-05	1.80E-05	2.15E-05	9.38E-06	4.91E-06
Benzo(e)pyrene	1.1E-07	5.0E-05	5.9E-05	1.1E-07	5.0E-05	5.9E-05	1.1E-07	5.0E-05	5.9E-05	1.1E-07	5.0E-05	5.9E-05	4.95E-05	5.91E-05	2.58E-05	1.35E-05
Beryllium	0.0E+00	0.0E+00	0.0E+00	0.0E+00	0.0E+00	0.0E+00	0.0E+00	0.0E+00	0.0E+00	0.0E+00	0.0E+00	0.0E+00	0.00E+00	0.00E+00	0.00E+00	0.00E+00
Cadmium	4.1E-07	1.8E-04	2.2E-04	4.1E-07	1.8E-04	2.2E-04	4.1E-07	1.8E-04	2.2E-04	4.1E-07	1.8E-04	2.2E-04	1.85E-04	2.20E-04	9.61E-05	5.03E-05
Hexavalent Chromium	4.5E-07	2.0E-04	2.4E-04	4.5E-07	2.0E-04	2.4E-04	4.5E-07	2.0E-04	2.4E-04	4.5E-07	2.0E-04	2.4E-04	2.03E-04	2.42E-04	1.05E-04	5.52E-05
Dioxin/Furans (see below)													5.40E-08	6.45E-08		3.64E-10
Fluoranthene	6.1E-07	2.7E-04	3.3E-04	6.1E-07	2.7E-04	3.3E-04	6.1E-07	2.7E-04	3.3E-04	6.1E-07	2.7E-04	3.3E-04	2.75E-04	3.28E-04	1.43E-04	7.48E-05
Fluorene	1.1E-05	5.0E-03	5.9E-03	1.1E-05	5.0E-03	5.9E-03	3.8E-06	1.7E-03	2.0E-03	3.8E-06	1.7E-03	2.0E-03	4.95E-03	5.91E-03	2.58E-03	1.35E-03
Formaldehyde	3.1E-03	1.4E+00	1.7E+00	3.1E-03	1.4E+00	1.7E+00	3.1E-03	1.4E+00	1.7E+00	3.1E-03	1.4E+00	1.7E+00	1.40E+00	1.67E+00	7.27E-01	3.80E-01
2-Methylnaphthalene	1.7E-04	7.7E-02	9.1E-02	1.70E-04	7.7E-02	9.1E-02	7.40E-05	3.3E-02	4.0E-02	7.40E-05	3.3E-02	4.0E-02	7.65E-02	9.13E-02	3.98E-02	2.08E-02
Naphthalene	6.5E-04	2.9E-01	3.5E-01	6.5E-04	2.9E-01	3.5E-01	9.0E-05	4.1E-02	4.8E-02	9.0E-05	4.1E-02	4.8E-02	2.93E-01	3.49E-01	1.52E-01	7.97E-02
Nickel	6.3E-05	2.8E-02	3.4E-02	6.3E-05	2.8E-02	3.4E-02	6.3E-05	2.8E-02	3.4E-02	6.3E-05	2.8E-02	3.4E-02	2.84E-02	3.38E-02	1.48E-02	7.73E-03
Perylene	8.8E-09	4.0E-06	4.7E-06	8.8E-09	4.0E-06	4.7E-06	8.8E-09	4.0E-06	4.7E-06	8.8E-09	4.0E-06	4.7E-06	3.96E-06	4.73E-06	2.06E-06	1.08E-06
Phenanthrene	2.3E-05	1.0E-02	1.2E-02	2.3E-05	1.0E-02	1.2E-02	7.6E-06	3.4E-03	4.1E-03	7.6E-06	3.4E-03	4.1E-03	1.04E-02	1.24E-02	5.39E-03	2.82E-03
POM (see below)	5.5E-07	2.5E-04	2.9E-04	5.5E-07	2.5E-04	2.9E-04	5.5E-07	2.5E-04	2.9E-04	5.5E-07	2.5E-04	2.9E-04	2.47E-04	2.94E-04	1.28E-04	6.72E-05
Pyrene	3.0E-06	1.4E-03	1.6E-03	3.0E-06	1.4E-03	1.6E-03	5.4E-07	2.4E-04	2.9E-04	5.4E-07	2.4E-04	2.9E-04	1.35E-03	1.61E-03	7.03E-04	3.68E-04
2,3,7,8-TCDD	2.1E-13	9.5E-11	1.1E-10	2.1E-13	9.5E-11	1.1E-10		0.0E+00	0.0E+00		0.0E+00	0.0E+00	9.45E-11	1.13E-10	4.92E-11	2.58E-11
TOTALS:			3.08			2.38			2.01			2.01	2.58	3.08		

1) Metals: Emission factors from AP-42 (3/04), Table 11.1-12, for fabric filter. EF expressed in pounds of pollutant per ton of HMA produced.

2) Organic Pollutants: Emission factors from AP-42 (3/04), Table 11.1-10., for fabric filter. For propane, the EFs for natural gas have been applied. EF for HCl from RFO combustion from AP-42 (3/04), Table 11.1-8. EFs expressed in pounds of pollutant per ton of HMA produced.

3) Dioxin/Furans: Max Annual Ave value represents emissions from all dioxin/furan mixtures, expressed as equivalent emissions of 2,3,7,8-TCDD, per IDAPA 58.01.01.586. Refer to Dioxin/Furan Mixture table for calculation methodology.

4) POM: Emission factors for POM based on polyaromatic hydrocarbon mixture identified in IDAPA 58.01.01.586. Refer to Polycyclic Organic Matter Mixture table for calculation methodology.

Polycyclic Organic Matter Mixture

Polycyclic Organic Matter (POM)	RFO			#2 Diesel			Nat. Gas			Propane		
	EF	lb/hr	T/yr	EF	lb/hr	T/yr	EF	lb/hr	T/yr	EF	lb/hr	T/yr
Benzo(a)anthracene	2.10E-07	9.5E-05	1.1E-04	2.10E-07	9.5E-05	1.1E-04	2.10E-07	9.5E-05	1.1E-04	2.10E-07	9.5E-05	1.1E-04
Benzo(b)fluoranthene	1.00E-07	4.5E-05	5.4E-05	1.00E-07	4.5E-05	5.4E-05	1.00E-07	4.5E-05	5.4E-05	1.00E-07	4.5E-05	5.4E-05
Benzo(k)fluoranthene	4.10E-08	1.8E-05	2.2E-05	4.10E-08	1.8E-05	2.2E-05	4.10E-08	1.8E-05	2.2E-05	4.10E-08	1.8E-05	2.2E-05
Benzo(a)pyrene	9.80E-09	4.4E-06	5.3E-06	9.80E-09	4.4E-06	5.3E-06	9.80E-09	4.4E-06	5.3E-06	9.80E-09	4.4E-06	5.3E-06
Chrysene	1.80E-07	8.1E-05	9.7E-05	1.80E-07	8.1E-05	9.7E-05	1.80E-07	8.1E-05	9.7E-05	1.80E-07	8.1E-05	9.7E-05
Dibenzo(a,h)anthracene		0.0E+00	0.0E+00		0.0E+00	0.0E+00		0.0E+00	0.0E+00		0.0E+00	0.0E+00
Indeno(1,2,3-cd)pyrene	7.00E-09	3.2E-06	3.8E-06	7.00E-09	3.2E-06	3.8E-06	7.00E-09	3.2E-06	3.8E-06	7.00E-09	3.2E-06	3.8E-06
TOTALS:	5.48E-07		0.000	5.48E-07		0.000	5.48E-07		0.000	5.48E-07		0.000

Dioxin/Furan Mixture

Dioxin/Furan	RFO			#2 Diesel			Max lb/hr	Max T/yr	TEF	Adjusted Max Annual Ave lb/hr
	EF	lb/hr	T/yr	EF	lb/hr	T/yr				
2,3,7,8-TCDD	2.1E-13	9.5E-11	1.1E-10	2.1E-13	9.5E-11	1.1E-10	9.45E-11	1.13E-10	1.0	2.58E-11
Total TCDD	9.3E-13	4.2E-10	5.0E-10	9.3E-13	4.2E-10	5.0E-10	4.19E-10	5.00E-10		
1,2,3,7,8-PeCDD	3.1E-13	1.4E-10	1.7E-10	3.1E-13	1.4E-10	1.7E-10	1.40E-10	1.67E-10	1.0	3.80E-11
Total PeCDD	2.2E-11	9.9E-09	1.2E-08	2.2E-11	9.9E-09	1.2E-08	9.90E-09	1.18E-08		
1,2,3,4,7,8-HxCDD	4.2E-13	1.9E-10	2.3E-10	4.2E-13	1.9E-10	2.3E-10	1.89E-10	2.26E-10	0.10	5.15E-12
1,2,3,6,7,8-HxCDD	1.3E-12	5.9E-10	7.0E-10	1.3E-12	5.9E-10	7.0E-10	5.85E-10	6.98E-10	0.10	1.59E-11
1,2,3,7,8,9-HxCDD	9.8E-13	4.4E-10	5.3E-10	9.8E-13	4.4E-10	5.3E-10	4.41E-10	5.26E-10	0.10	1.20E-11
Total HxCDD	1.2E-11	5.4E-09	6.4E-09	1.2E-11	5.4E-09	6.4E-09	5.40E-09	6.45E-09		
1,2,3,4,6,7,8-Hp-CDD	4.8E-12	2.2E-09	2.6E-09	4.8E-12	2.2E-09	2.6E-09	2.16E-09	2.58E-09	0.01	5.89E-12
Total HpCDD	1.9E-11	8.6E-09	1.0E-08	1.9E-11	8.6E-09	1.0E-08	8.55E-09	1.02E-08		
Octa CDD	2.5E-11	1.1E-08	1.3E-08	2.5E-11	1.1E-08	1.3E-08	1.13E-08	1.34E-08	0.0003	9.20E-13
Total PCDD	7.9E-11	3.6E-08	4.2E-08	7.9E-11	3.6E-08	4.2E-08	3.56E-08	4.24E-08		
2,3,7,8-TCDF	9.7E-13	4.4E-10	5.2E-10	9.7E-13	4.4E-10	5.2E-10	4.37E-10	5.21E-10	0.1	1.19E-11
Total TCDF	3.7E-12	1.7E-09	2.0E-09	3.7E-12	1.7E-09	2.0E-09	1.67E-09	1.99E-09		
1,2,3,7,8-PeCDF	4.3E-12	1.9E-09	2.3E-09	4.3E-12	1.9E-09	2.3E-09	1.94E-09	2.31E-09	0.03	1.58E-11
2,3,4,7,8-PeCDF	8.4E-13	3.8E-10	4.5E-10	8.4E-13	3.8E-10	4.5E-10	3.78E-10	4.51E-10	0.30	3.09E-11
Total PeCDF	8.4E-11	3.8E-08	4.5E-08	8.4E-11	3.8E-08	4.5E-08	3.78E-08	4.51E-08		
1,2,3,4,7,8-HxCDF	4.0E-12	1.8E-09	2.1E-09	4.0E-12	1.8E-09	2.1E-09	1.80E-09	2.15E-09	0.10	4.91E-11
1,2,3,6,7,8-HxCDF	1.2E-12	5.4E-10	6.4E-10	1.2E-12	5.4E-10	6.4E-10	5.40E-10	6.45E-10	0.10	1.47E-11
2,3,4,6,7,8-HxCDF	1.9E-12	8.6E-10	1.0E-09	1.9E-12	8.6E-10	1.0E-09	8.55E-10	1.02E-09	0.10	2.33E-11
1,2,3,7,8,9-HxCDF	8.4E-12	3.8E-09	4.5E-09	8.4E-12	3.8E-09	4.5E-09	3.78E-09	4.51E-09	0.10	1.03E-10
Total HxCDF	1.3E-11	5.9E-09	7.0E-09	1.3E-11	5.9E-09	7.0E-09	5.85E-09	6.98E-09		
1,2,3,4,6,7,8-HpCDF	6.5E-12	2.9E-09	3.5E-09	6.5E-12	2.9E-09	3.5E-09	2.93E-09	3.49E-09	0.01	7.97E-12
1,2,3,4,7,8,9-HpCDF	2.7E-12	1.2E-09	1.5E-09	2.7E-12	1.2E-09	1.5E-09	1.22E-09	1.45E-09	0.01	3.31E-12
Total HpCDF	1.0E-11	4.5E-09	5.4E-09	1.0E-11	4.5E-09	5.4E-09	4.50E-09	5.37E-09		
Octa CDF	4.8E-12	2.2E-09	2.6E-09	4.8E-12	2.2E-09	2.6E-09	2.16E-09	2.58E-09	0.0003	1.77E-13
Total PCDF	4.0E-11	1.8E-08	2.1E-08	4.0E-11	1.8E-08	2.1E-08	1.80E-08	2.15E-08		
Total PCDD/PCDF	1.2E-10	5.4E-08	6.4E-08	1.2E-10	5.4E-08	6.4E-08	5.40E-08	6.45E-08		
							TOTAL ADJUSTED:			3.64E-10

1) Organic Pollutants: Emission factors from AP-42 (3/04), Table 11.1-10., for fabric filter. For propane, the EFs for natural gas have been applied. EF for dioxin/furans from nat. gas or propane not available. EFs expressed in pounds of pollutant per ton of HMA produced.

2) Toxic Equivalency Factors: 2005, Van den Berg, et al, The 2005 World Health Organization Reevaluation of Human and Mammalian Toxic Equivalency Factors for Dioxins and Dioxin-Like Compounds, Toxicological Sciences 93(2), 223-241 (2006). Accessible at http://toxsci.oxfordjournals.org/cgi/reprint/93/2/223. Use of the 2005 WHO toxic equivalency factors (TEFs) is consistent with current EPA recommendations for TRI reporting (72 FR 26544, May 10, 2007). IDAPA 58.01.01.586, TAPs Carcinogenic Increments: Total of adjusted emission rates are expressed as 2,3,7,8 TCDD equivalents.

Greenhouse Gases

GHG	RFO			#2 Diesel			Nat. Gas			Propane			Max lb/hr	Max T/yr
	EF	lb/hr	T/yr	EF	lb/hr	T/yr	EF	lb/hr	T/yr	EF	lb/hr	T/yr		
CO2	33.0	14850.00	17727.19	33.0	14850.00	17727.19	33.0	14850.00	17727.19	33.0	14850.00	17727.19	14850.00	17727.19
Methane	0.012	5.40	6.45	0.012	5.40	6.45	0.012	5.40	6.45	0.012	0.01	6.45	5.40	6.45
N2O	0.260	0.251	0.30	0.260	0.251	0.30	2.2	0.29	0.35	0.9	1.33	1.59	1.33	1.59
CO2e		15041.12	17955.34		15041.12	17955.34		15053.66	17970.31		15261.89	18353.95	15375.04	18353.95

1) Carbon Dioxide: Emission factors from AP-42 (3/04), Table 11.1-7. For propane, the EF for natural gas combustion was applied. EFs are expressed in pounds of CO2 per ton of HMA produced.

2) Methane: Emission factors from AP-42 (3/04), Table 11.1-8. For propane, the EF for natural gas combustion was applied. EFs are expressed in pounds of methane per ton of HMA produced.

3) N2O: For #2 diesel, emission factor from AP-42 (5/10), Table 1.3-8; EF expressed in pounds of N2O per 1000 gallons. For RFO, the EF for #2 diesel was applied. For natural gas, EF from AP-42 (7/98), Table 1.4-2, uncontrolled; EF expressed in pounds of N2O per MMSCF. For propane, Ef from AP-42 (7/08), Table 1.5-1; EF expressed in lb N2O per 1000 gallons.

4) CO2e: The sum of CO2, methane, and N2O expressed as carbon dioxide equivalent. A global warming potential of 21 was applied to methane. A GWP of 310 was applied to N2O.

Potential To Emit - HAPs

HAP	RFO			#2 Diesel			Nat. Gas			Propane			Max lb/hr	Max T/yr
	EF	lb/hr	T/yr	EF	lb/hr	T/yr	EF	lb/hr	T/yr	EF	lb/hr	T/yr		
Acenaphthene[3]	1.40E-06	6.30E-04	7.52E-04	1.40E-06	6.30E-04	7.52E-04	1.40E-06	6.30E-04	7.52E-04	1.40E-06	6.30E-04	7.52E-04	6.30E-04	0.001
Acenaphthylene[3]	2.20E-05	9.90E-03	1.18E-02	2.20E-05	9.90E-03	1.18E-02	8.60E-06	3.87E-03	4.62E-03	8.60E-06	3.87E-03	4.62E-03	9.90E-03	0.012
Acetaldehyde	1.30E-03	5.85E-01	6.98E-01		0.00E+00	0.00E+00		0.00E+00	0.00E+00		0.00E+00	0.00E+00	5.85E-01	0.698
Acrolein	2.60E-05	1.17E-02	1.40E-02		0.00E+00	0.00E+00		0.00E+00	0.00E+00		0.00E+00	0.00E+00	1.17E-02	0.014
Antimony	1.80E-07	8.10E-05	9.67E-05	1.80E-07	8.10E-05	9.67E-05	1.80E-07	8.10E-05	9.67E-05	1.80E-07	8.10E-05	9.67E-05	8.10E-05	0.000
Anthracene[2]	3.10E-06	1.40E-03	1.67E-03	3.10E-06	1.40E-03	1.67E-03	2.20E-07	9.90E-05	1.18E-04	2.20E-07	9.90E-05	1.18E-04	1.40E-03	0.002
Arsenic	5.60E-07	2.52E-04	3.01E-04	5.60E-07	2.52E-04	3.01E-04	5.60E-07	2.52E-04	3.01E-04	5.60E-07	2.52E-04	3.01E-04	2.52E-04	0.000
Benzene	3.90E-04	1.76E-01	2.10E-01	3.90E-04	1.76E-01	2.10E-01	3.90E-04	1.76E-01	2.10E-01	3.90E-04	1.76E-01	2.10E-01	1.76E-01	0.210
Benzo(a)anthracene[3]	2.10E-07	9.45E-05	1.13E-04	2.10E-07	9.45E-05	1.13E-04	2.10E-07	9.45E-05	1.13E-04	2.10E-07	9.45E-05	1.13E-04	9.45E-05	0.000
Benzo(a)pyrene[2]	9.80E-09	4.41E-06	5.26E-06	9.80E-09	4.41E-06	5.26E-06	9.80E-09	4.41E-06	5.26E-06	9.80E-09	4.41E-06	5.26E-06	4.41E-06	0.000
Benzo(b)fluoranthene[3]	1.00E-07	4.50E-05	5.37E-05	1.00E-07	4.50E-05	5.37E-05	1.00E-07	4.50E-05	5.37E-05	1.00E-07	4.50E-05	5.37E-05	4.50E-05	0.000
Benzo(e)pyrene[3]	1.10E-07	4.95E-05	5.91E-05	1.10E-07	4.95E-05	5.91E-05	1.10E-07	4.95E-05	5.91E-05	1.10E-07	4.95E-05	5.91E-05	4.95E-05	0.000
Benzo(g,h,i)perylene[3]	4.00E-08	1.80E-05	2.15E-05	4.00E-08	1.80E-05	2.15E-05	4.00E-08	1.80E-05	2.15E-05	4.00E-08	1.80E-05	2.15E-05	1.80E-05	0.000
Benzo(k)fluoranthene[3]	4.10E-08	1.85E-05	2.20E-05	4.10E-08	1.85E-05	2.20E-05	4.10E-08	1.85E-05	2.20E-05	4.10E-08	1.85E-05	2.20E-05	1.85E-05	0.000
Beryllium	0.00E+00	0.00E+00	0.00E+00	0.00E+00	0.00E+00	0.00E+00	0.00E+00	0.00E+00	0.00E+00	0.00E+00	0.00E+00	0.00E+00	0.00E+00	0.000
1,3-Butadiene		0.00E+00	0.00E+00		0.00E+00	0.00E+00		0.00E+00	0.00E+00		0.00E+00	0.00E+00	0.00E+00	0.000
Cadmium	4.10E-07	1.85E-04	2.20E-04	4.10E-07	1.85E-04	2.20E-04	4.10E-07	1.85E-04	2.20E-04	4.10E-07	1.85E-04	2.20E-04	1.85E-04	0.000
Carbon Disulfide		0.00E+00	0.00E+00		0.00E+00	0.00E+00		0.00E+00	0.00E+00		0.00E+00	0.00E+00	0.00E+00	0.000
Chromium	5.50E-06	2.48E-03	2.95E-03	5.50E-06	2.48E-03	2.95E-03	5.50E-06	2.48E-03	2.95E-03	5.50E-06	2.48E-03	2.95E-03	2.48E-03	0.003
Hexavalent Chromium	4.50E-07	2.03E-04	2.42E-04	4.50E-07	2.03E-04	2.42E-04	4.50E-07	2.03E-04	2.42E-04	4.50E-07	2.03E-04	2.42E-04	2.03E-04	0.000
Chrysene[3]	1.80E-07	8.10E-05	9.67E-05	1.80E-07	8.10E-05	9.67E-05	1.80E-07	8.10E-05	9.67E-05	1.80E-07	8.10E-05	9.67E-05	8.10E-05	0.000
Cobalt	2.60E-08	1.17E-05	1.40E-05	2.60E-08	1.17E-05	1.40E-05	2.60E-08	1.17E-05	1.40E-05	2.60E-08	1.17E-05	1.40E-05	1.17E-05	0.000
Cumene		0.00E+00	0.00E+00		0.00E+00	0.00E+00		0.00E+00	0.00E+00		0.00E+00	0.00E+00	0.00E+00	0.000
Dibenzo(a,h)anthracene[3]		0.00E+00	0.00E+00		0.00E+00	0.00E+00		0.00E+00	0.00E+00		0.00E+00	0.00E+00	0.00E+00	0.000
Dichlorobenzene		0.00E+00	0.00E+00		0.00E+00	0.00E+00		0.00E+00	0.00E+00		0.00E+00	0.00E+00	0.00E+00	0.000
Ethyl Benzene	2.40E-04	1.08E-01	1.29E-01	2.40E-04	1.08E-01	1.29E-01	2.40E-04	1.08E-01	1.29E-01	2.40E-04	1.08E-01	1.29E-01	1.08E-01	0.129
Fluoranthene[3]	6.10E-07	2.75E-04	3.28E-04	6.10E-07	2.75E-04	3.28E-04	6.10E-07	2.75E-04	3.28E-04	6.10E-07	2.75E-04	3.28E-04	2.75E-04	0.000
Fluorene[3]	1.10E-05	4.95E-03	5.91E-03	1.10E-05	4.95E-03	5.91E-03	3.80E-06	1.71E-03	2.04E-03	3.80E-06	1.71E-03	2.04E-03	4.95E-03	0.006
Formaldehyde	3.10E-03	1.40E+00	1.67E+00	3.10E-03	1.40E+00	1.67E+00	3.10E-03	1.40E+00	1.67E+00	3.10E-03	1.40E+00	1.67E+00	1.40E+00	1.665
Hexane	9.20E-04	4.14E-01	4.94E-01	9.20E-04	4.14E-01	4.94E-01	9.20E-04	4.14E-01	4.94E-01	9.20E-04	4.14E-01	4.94E-01	4.14E-01	0.494
HCl	2.10E-04	9.45E-02	1.13E-01		0.00E+00	0.00E+00		0.00E+00	0.00E+00		0.00E+00	0.00E+00	9.45E-02	0.113
Indeno(1,2,3-cd)pyrene[3]	7.00E-09	3.15E-06	3.76E-06	7.00E-09	3.15E-06	3.76E-06	7.00E-09	3.15E-06	3.76E-06	7.00E-09	3.15E-06	3.76E-06	3.15E-06	0.000
Lead	1.50E-05	6.75E-03	8.06E-03	1.50E-05	6.75E-03	8.06E-03	6.20E-07	2.79E-04	3.33E-04	6.20E-07	2.79E-04	3.33E-04	6.75E-03	0.008
Manganese	7.70E-06	3.47E-03	4.14E-03	7.70E-06	3.47E-03	4.14E-03	7.70E-06	3.47E-03	4.14E-03	7.70E-06	3.47E-03	4.14E-03	3.47E-03	0.004
Mercury	2.60E-06	1.17E-03	1.40E-03	2.60E-06	1.17E-03	1.40E-03	2.40E-07	1.08E-04	1.29E-04	2.40E-07	1.08E-04	1.29E-04	1.17E-03	0.001
Methyl Chloroform	4.80E-05	2.16E-02	2.58E-02	4.80E-05	2.16E-02	2.58E-02	4.80E-05	2.16E-02	2.58E-02	4.80E-05	2.16E-02	2.58E-02	2.16E-02	0.026
Methyl Ethyl Ketone	2.00E-05	9.00E-03	1.07E-02		0.00E+00	0.00E+00		0.00E+00	0.00E+00		0.00E+00	0.00E+00	9.00E-03	0.011
2-Methylnaphthalene[3]	1.70E-04	7.65E-02	9.13E-02	1.70E-04	7.65E-02	9.13E-02	7.40E-05	3.33E-02	3.98E-02	7.40E-05	3.33E-02	3.98E-02	7.65E-02	0.091
3-Methylchloranthrene[3]		0.00E+00	0.00E+00		0.00E+00	0.00E+00		0.00E+00	0.00E+00		0.00E+00	0.00E+00	0.00E+00	0.000
Naphthalene[3]	6.50E-04	2.93E-01	3.49E-01	6.50E-04	2.93E-01	3.49E-01	9.00E-05	4.05E-02	4.83E-02	9.00E-05	4.05E-02	4.83E-02	2.93E-01	0.349
Nickel	6.30E-05	2.84E-02	3.38E-02	6.30E-05	2.84E-02	3.38E-02	6.30E-05	2.84E-02	3.38E-02	6.30E-05	2.84E-02	3.38E-02	2.84E-02	0.034
Pentane		0.00E+00	0.00E+00		0.00E+00	0.00E+00		0.00E+00	0.00E+00		0.00E+00	0.00E+00	0.00E+00	0.000
Perylene[3]	8.80E-09	3.96E-06	4.73E-06	8.80E-09	3.96E-06	4.73E-06	8.80E-09	3.96E-06	4.73E-06	8.80E-09	3.96E-06	4.73E-06	3.96E-06	0.000
Phenanthrene[3]	2.30E-05	1.04E-02	1.24E-02	2.30E-05	1.04E-02	1.24E-02	7.60E-06	3.42E-03	4.08E-03	7.60E-06	3.42E-03	4.08E-03	1.04E-02	0.012
Phosphorus	2.80E-05	1.26E-02	1.50E-02	2.80E-05	1.26E-02	1.50E-02	2.80E-05	1.26E-02	1.50E-02	2.80E-05	1.26E-02	1.50E-02	1.26E-02	0.015
POM (see below)													3.98E-01	0.475
Propionaldehyde	1.30E-04	5.85E-02	6.98E-02		0.00E+00	0.00E+00		0.00E+00	0.00E+00		0.00E+00	0.00E+00	5.85E-02	0.070
Pyrene[3]	3.00E-06	1.35E-03	1.61E-03	3.00E-06	1.35E-03	1.61E-03	5.40E-07	2.43E-04	2.90E-04	5.40E-07	2.43E-04	2.90E-04	1.35E-03	0.002
Quinone	1.60E-04	7.20E-02	8.60E-02		0.00E+00	0.00E+00		0.00E+00	0.00E+00		0.00E+00	0.00E+00	7.20E-02	0.086
Selenium	3.50E-07	1.58E-04	1.88E-04	3.50E-07	1.58E-04	1.88E-04	3.50E-07	1.58E-04	1.88E-04	3.50E-07	1.58E-04	1.88E-04	1.58E-04	0.000
Styrene		0.00E+00	0.00E+00		0.00E+00	0.00E+00		0.00E+00	0.00E+00		0.00E+00	0.00E+00	0.00E+00	0.000
2,3,7,8-TCDD	2.10E-13	9.45E-11	1.13E-10	2.10E-13	9.45E-11	1.13E-10		0.00E+00	0.00E+00		0.00E+00	0.00E+00	9.45E-11	0.000
Toluene	2.90E-03	1.31E+00	1.56E+00	2.90E-03	1.31E+00	1.56E+00	1.50E-04	6.75E-02	8.06E-02	1.50E-04	6.75E-02	8.06E-02	1.31E+00	1.558
Total PCDD/PCDF[3]	1.2E-10	5.4E-08	6.4E-08	1.2E-10	5.4E-08	6.4E-08							5.40E-08	0.000
Xylene	2.00E-04	9.00E-02	1.07E-01	2.00E-04	9.00E-02	1.07E-01	2.00E-04	9.00E-02	1.07E-01	2.00E-04	9.00E-02	1.07E-01	9.00E-02	0.107
TOTALS:			5.72			4.73			2.87			2.87	4.79	5.72

1) Metals: Emission factors from AP-42 (3/04), Table 11.1-12, for fabric filter. EF expressed in pounds of pollutant per ton of HMA produced.

2) Organic Pollutants: Emission factors from AP-42 (3/04), Table 11.1-10., for fabric filter. For propane, the EFs for natural gas have been applied. EF for HCl from RFO combustion from AP-42 (3/04), Table 11.1-8. EFs expressed in pounds of pollutant per ton of HMA produced.

3) POM: Maximum PTE estimates for POM based on polycyclic organic matter mixture as defined by 1900 CAA Amendments. Compounds included in the mixture are denoted in the table. To avoid double counting, the total, maximum PTE estimates do not include POM (i.e., individual compounds are summed separately) or 2, 3, 7, 8-TCDD (included in Total PCDD/PCDF).

Emission Unit:	Asphalt Tank Heater
Manufacturer/Model:	Gencor, Model HYCGO-100
Burner capacity (MMBTU/hr):	0.5
Fuel Type(s):	RFO, #2 Diesel, natural gas, or propane
Daily Hours of Operation (hr/d)	24
Annual Hours of Operation (hr/yr):	8760

Control Equipment:	None

RFO and Diesel (MMBTU/1000 gallons):	140	(AP-42, App A)
Nat. gas (BTU/scf):	1020	(AP-42, Table 1.4-1, footnote (a))
Propane (MMBTU/1000 gallons):	91.5	(AP-42, Table 1.5-1, footnote (a))
Propane (BTU/scf):	2504	(http://www.engineeringtoolbox.com/fuel-gases-combustion-values-d_510.html)

Potential To Emit - Criteria Pollutants

Criteria Pollutant	RFO			#2 Diesel			Nat. Gas			Propane			Max lb/hr	Max T/yr	Max 24hr Ave lb/hr	Max Annual Ave lb/hr
	EF	lb/hr	T/yr	EF	lb/hr	T/yr	EF	lb/hr	T/yr	EF	lb/hr	T/yr				
CO	2.10	0.0075	0.03	1.20	0.0043	0.02	8.90	0.0044	0.02	7.50	0.041	0.18	0.04	0.18	0.041	0.041
CO2e		78.88	345.47		100.30	439.33		98.40	430.98		69.85	305.96	100.30	439.33	100.304	100.304
NOx	16.00	0.0571	0.25	20.00	0.071	0.31	100.00	0.049	0.215	13.00	0.071	0.31	0.07	0.31	0.071	0.071
SO2	53.50	0.1911	0.84	0.213	0.001	0.003	0.60	0.0003	0.001	1.50	0.008	0.04	0.19	0.84	0.191	0.191
PM	56.10	0.2004	0.88	2.00	0.007	0.03	7.60	0.0037	0.016	0.70	0.004	0.02	0.20	0.88	0.200	0.200
PM10	48.45	0.1730357	0.76	1.00	0.004	0.02	7.60	0.0037	0.016	0.70	0.004	0.02	0.173	0.76	0.173	0.173
PM2.5	1.79	0.0063771	0.03	0.25	0.001	0.004	7.60	0.0037	0.016	0.70	0.004	0.02	0.006	0.03	0.006	0.006
VOC	1.00	0.0036	0.02	0.25	0.001	0.004	5.50	0.0027	0.012	1.00	0.005	0.02	0.01	0.02	0.005	0.005
Lead	0.50	0.0018	0.01	9.0E-06	4.5E-06	1.97E-05	5.0E-04	0.0000	1.07E-06	5.0E-04	0.000	4.37E-07	0.00	0.01	0.002	0.002

Emission Factor Information:

1) Carbon Monoxide: For diesel and natural gas, emission factors from AP-42 (3/04), Table 11.1-13. For RFO, EF from AP-42 (10/96), Table 1.11-2, for Atomizing burner. For propane, EF from AP-42 (7/08), Table 1.5-1,from AP-42 (7/08), Table 1.5-1, for propane combustion in commercial boilers. EFs for RFO, diesel, and propane are expressed in pounds of CO per 1000 gallons of fuel fired. EF for natural gas expressed in pounds of CO per MMscf of gas fired.

2) Carbon Dioxide Equivalent: Refer to Greenhouse Gases table for calculation methodology.

3) Nitrogen Oxides: For diesel, emission factor from AP-42 (5/10), Table 1.3-1, for Boilers < 100 MMBTU/hr. For RFO, EF from AP-42 (10/96), Table 1.11-2, for Atomizing burner. For natural gas, EF from AP-42 (7/98), Table 1.4-1, for uncontrolled, small boilers. EF for propane from AP-42 (7/08), Table 1.5-1, for propane combustion in commercial boilers. EFs for RFO, diesel, and propane expressed in pounds of NOx per 1000 gallons. EF for natural gas expressed in pounds of NOx per MMscf.

4) Sulfur Dioxide: For diesel, emission factor from AP-42 (5/10), Table 1.3-1, for Boilers < 100 MMBTU/hr; sulfur content is 0.0015%. For RFO, EF from AP-42 (10/96), Table 1.11-2, for Atomizing burner; sulfur content is 0.5%, per information from vendor. For natural gas, EF from AP-42 (7/98), Table 1.4-2. For propane, EF from AP-42 (7/08), Table 1.5-1, for propane combustion in commercial boilers; sulfur content assumed to be ≤15 gr/100 scf (Gas Processors Association Engineering Data Book, 1972). EFs for RFO, diesel, and propane expressed in pounds of SO2 per 1000 gallons. EF for natural gas expressed in pounds of SO2 per MMscf.

5) Particulate Matter: For diesel, emission factor from AP-42 (5/10), Table 1.3-6. For RFO, EF from AP-42 (10/96), Table 1.11-1, for Atomizing burner; 0.85% ash content, per info from vendor. EF for natural gas from AP-42 (7/98), Table 1.4-2. EF for propane from AP-42 (7/08), Table 1.5-1, for propane combustion in commercial boilers. EFs for RFO, diesel, and propane expressed in pounds of PM per 1000 gallons. EF for natural gas expressed in pounds of PM per MMscf.

6) PM-10: For diesel, emission factor from AP-42 (5/10), Table 1.3-6. For RFO, EF from AP-42 (10/96), Table 1.11-1, for Atomizing burner; 0.85% ash content, per info from vendor. EF for natural gas from AP-42 (7/98), Table 1.4-2, footnote c). EF for propane from AP-42 (7/08), Table 1.5-1, for propane combustion in commercial boilers, per footnote d), all PM assumed to be PM-10. EFs for RFO, diesel, and propane expressed in pounds of PM per 1000 gallons. EF for natural gas expressed in pounds of PM per MMscf.

7) PM-2.5: For diesel, emission factor from AP-42 (5/10), Table 1.3-6. For RFO, EF from AP-42 (5/10), Table 1.3-7, for Residual Oil, assuming No. 6 oil with a sulfur content of 0.5%, per vendor. EF for natural gas from AP-42 (7/98), Table 1.4-2, footnote c). EF for propane from AP-42 (7/08), Table 1.5-1, for propane combustion in commercial boilers, all PM assumed to be PM-2.5. EFs for RFO, diesel, and propane expressed in pounds of PM per 1000 gallons. EF for natural gas expressed in pounds of PM per MMscf.

8) VOC: For diesel, emission factor from AP-42 (5/10), Table 1.3-3, for TOC from industrial boilers. For RFO, EF from AP-42 (10/96), Table 1.11-3, for TOC from Atomizing burner. For natural gas, EF from AP-42 (7/98), Table 1.4-2. For propane, EF from AP-42 (7/08), Table 1.5-1, for TOC from commercial boilers. EFs for RFO, diesel, and propane expressed in pounds of VOC per 1000 gallons. EF for natural gas expressed in pounds of VOC per MMscf of gas fired.

9) Lead: For diesel, emission factor from AP-42 (5/10), Table 1.3-10. For RFO, EF from AP-42 (10/96), Table 1.11-1, for Atomizing burner, 0.5% lead, per vendor's specifications. EF for natural gas from AP-42 (7/98), Table 1.4-2. For propane, EF for natural gas was applied. EF for RFO expressed in pounds of Pb per 1000 gallons. EF for diesel expressed in pounds Pb per MMBTU. EFs for natural gas and propane expressed in pounds of Pb per MMscf.

Potential To Emit - Non-Carcinogenic TAPs

Non-Carcinogen TAP	RFO			#2 Diesel			Nat. Gas			Propane			Max lb/hr	Max T/yr	Max 24hr Ave lb/hr	Max Annual Ave lb/hr
	EF	lb/hr	T/yr	EF	lb/hr	T/yr	EF	lb/hr	T/yr	EF	lb/hr	T/yr				
Antimony	4.50E-03	1.61E-05	7.04E-05										1.61E-05	7.04E-05	1.61E-05	1.61E-05
Barium							4.40E-03	2.16E-06	9.45E-06	4.40E-03	8.79E-07	3.85E-06	2.16E-06	9.45E-06	2.16E-06	2.16E-06
Chromium	1.80E-01	6.43E-04	2.82E-03	3.00E-06	1.50E-06	6.57E-06	1.40E-03	6.86E-07	3.01E-06	1.40E-03	2.80E-07	1.22E-06	6.43E-04	2.82E-03	6.43E-04	6.43E-04
Cobalt	5.20E-03	1.86E-05	8.13E-05				8.40E-05	4.12E-08	1.80E-07	8.40E-05	1.68E-08	7.35E-08	1.86E-05	8.13E-05	1.86E-05	1.86E-05
Copper				6.00E-06	3.00E-06	1.31E-05	8.50E-04	4.17E-07	1.83E-06	8.50E-04	1.70E-07	7.43E-07	3.00E-06	1.31E-05	3.00E-06	3.00E-06
Dichlorobenzene	8.00E-07	2.9E-09	1.25E-08				1.20E-03	5.88E-07	2.58E-06	1.20E-03	2.40E-07	1.05E-06	5.88E-07	2.58E-06	5.88E-07	5.88E-07
Hexane							1.8	8.82E-04	3.86E-03	1.8	3.59E-04	1.57E-03	8.82E-04	3.86E-03	8.82E-04	8.82E-04
Hydrochloric Acid	6.6	2.4E-02	1.03E-01			0.00E+00			0.00E+00			0.00E+00	2.36E-02	1.03E-01	2.36E-02	2.36E-02
Manganese	5.00E-02	1.79E-04	7.82E-04	6.00E-06	3.00E-06	1.31E-05	3.80E-04	1.86E-07	8.16E-07	3.80E-04	7.59E-08	3.32E-07	1.79E-04	7.82E-04	1.79E-04	1.79E-04
Mercury				3.00E-06	1.50E-06	6.57E-06	2.60E-04	1.27E-07	5.58E-07	2.60E-04	5.19E-08	2.27E-07	1.50E-06	6.57E-06	1.50E-06	1.50E-06
Molybdenum							1.10E-03	5.39E-07	2.36E-06	1.10E-03	2.20E-07	9.62E-07	5.39E-07	2.36E-06	5.39E-07	5.39E-07
Naphthalene	9.20E-05	3.3E-07	1.4E-06	1.70E-02	6.1E-05	2.7E-04	6.10E-04	2.99E-07	1.31E-06	6.10E-04	1.22E-07	5.34E-07	6.07E-05	2.66E-04	6.07E-05	6.07E-05
Pentane							2.60E+00	1.27E-03	5.58E-03	2.60E+00	5.19E-04	2.27E-03	1.27E-03	5.58E-03	1.27E-03	1.27E-03
Phenol	2.80E-05	1.0E-07	4.4E-07										1.00E-07	4.38E-07	1.00E-07	1.00E-07
Selenium				1.50E-05	7.50E-06	3.29E-05	2.40E-05	1.18E-08	5.15E-08	2.40E-05	4.79E-09	2.10E-08	7.50E-06	3.29E-05	7.50E-06	7.50E-06
Toluene							3.40E-03	1.67E-06	7.30E-06	3.40E-03	6.79E-07	2.97E-06	1.67E-06	7.30E-06	1.67E-06	1.67E-06
Vanadium							2.30E-03	1.13E-06	4.94E-06	2.30E-03	4.59E-07	2.01E-06	1.13E-06	4.94E-06	1.13E-06	1.13E-06
Zinc				4.00E-06	2.00E-06	8.76E-06	2.90E-02	1.42E-05	6.23E-05	2.90E-02	5.79E-06	2.54E-05	1.42E-05	6.23E-05	1.42E-05	1.42E-05
TOTALS:			1.07E-01			3.47E-04			9.54E-03			3.89E-03	0.027	0.117		

Potential To Emit - Carcinogenic TAPs

Carcinogen TAPs	RFO			#2 Diesel			Nat. Gas			Propane			Max lb/hr	Max T/yr	Max 24hr Ave lb/hr	Max Annual Ave lb/hr
	EF	lb/hr	T/yr	EF	lb/hr	T/yr	EF	lb/hr	T/yr	EF	lb/hr	T/yr				
Acenaphthene				5.30E-04	1.9E-06	8.3E-06	1.80E-06	8.82E-10	3.86E-09	1.80E-06	3.59E-10	1.57E-09	1.89E-06	8.29E-06	1.89E-06	1.89E-06
Acenaphthylene				2.00E-04	7.1E-07	3.1E-06	1.80E-06	8.82E-10	3.86E-09	1.80E-06	3.59E-10	1.57E-09	7.14E-07	3.13E-06	7.14E-07	7.14E-07
Anthracene	1.00E-04	3.6E-07	1.6E-06	1.80E-04	6.4E-07	2.8E-06	2.40E-06	1.18E-09	5.15E-09	2.40E-06	4.79E-10	2.10E-09	6.43E-07	2.82E-06	6.43E-07	6.43E-07
Arsenic	6.00E-02	2.14E-04	9.39E-04	4.00E-06	2.00E-06	8.76E-06	2.00E-04	9.80E-08	4.29E-07	2.00E-04	3.99E-08	1.75E-07	2.14E-04	9.39E-04	2.14E-04	2.14E-04
Benzene							2.10E-03	1.03E-06	4.51E-06	2.10E-03	4.19E-07	1.84E-06	1.03E-06	4.51E-06	1.03E-06	1.03E-06
Benzo(a)pyrene	4.00E-03	1.4E-05	6.3E-05			0.00E+00	1.20E-06	5.88E-10	2.58E-09	1.20E-06	2.40E-10	1.05E-09	1.43E-05	6.26E-05	1.43E-05	1.43E-05
Benzo(g,h,i)perylene							1.20E-06	5.88E-10	2.58E-09	1.20E-06	2.40E-10	1.05E-09	5.88E-10	2.58E-09	5.88E-10	5.88E-10
Beryllium	1.80E-03	6.43E-06	2.82E-05	3.00E-06	1.50E-06	6.57E-06	1.20E-05	5.88E-09	2.58E-08	1.20E-05	2.40E-09	1.05E-08	6.43E-06	2.82E-05	6.43E-06	6.43E-06
Bis(2-ethylhexyl)phthalate	2.20E-03	7.9E-06	3.4E-05										7.86E-06	3.44E-05	7.86E-06	7.86E-06
Cadmium	1.20E-02	4.29E-05	1.88E-04	3.00E-06	1.50E-06	6.57E-06	1.10E-03	5.39E-07	2.36E-06	1.10E-03	2.20E-07	9.62E-07	4.29E-05	1.88E-04	4.29E-05	4.29E-05
Dioxin/Furans (see below)													8.21E-10	3.60E-09		1.36E-12
Fluoranthene				4.40E-05	1.6E-07	6.9E-07	3.00E-06	1.47E-09	6.44E-09	3.00E-06	5.99E-10	2.62E-09	1.57E-07	6.88E-07	1.57E-07	1.57E-07
Fluorene				3.20E-05	1.1E-07	5.0E-07	2.80E-06	1.37E-09	6.01E-09	2.80E-06	5.59E-10	2.45E-09	1.14E-07	5.01E-07	1.14E-07	1.14E-07
Formaldehyde				6.10E-02	2.2E-04	9.5E-04	7.50E-02	3.68E-05	1.61E-04	7.50E-02	1.50E-05	6.56E-05	2.18E-04	9.54E-04	2.18E-04	2.18E-04
3-Methylchloranthrene							1.80E-06	8.82E-10	3.86E-09	1.80E-06	3.59E-10	1.57E-09	8.82E-10	3.86E-09	8.82E-10	8.82E-10
2-Methylnaphthalene							2.40E-05	1.18E-08	5.15E-08	2.40E-05	4.79E-09	2.10E-08	1.18E-08	5.15E-08	1.18E-08	1.18E-08
Naphthalene	9.20E-05	3.3E-07	1.4E-06	1.70E-02	6.1E-05	2.7E-04	6.10E-04	2.99E-07	1.31E-06	6.10E-04	1.22E-07	5.34E-07	6.07E-05	2.66E-04	6.07E-05	6.07E-05
Nickel	1.60E-01	5.71E-04	2.50E-03	3.00E-06	1.50E-06	6.57E-06	2.10E-03	1.03E-06	4.51E-06	2.10E-03	4.19E-07	1.84E-06	5.71E-04	2.50E-03	5.71E-04	5.71E-04
Phenanthrene	1.00E-04	3.6E-07	1.6E-06	4.90E-03	1.8E-05	7.7E-05	1.70E-05	8.33E-09	3.65E-08	1.70E-05	3.39E-09	1.49E-08	1.75E-05	7.67E-05	1.75E-05	1.75E-05
POM (see below)	1.20E-02	4.3E-05	1.9E-04	3.30E-03	1.2E-05	5.2E-05	1.14E-05	5.59E-09	2.45E-08	1.14E-05	2.28E-09	9.97E-09	4.29E-05	1.88E-04	4.29E-05	4.29E-05
Pyrene	8.30E-06	3.0E-08	1.3E-07	3.20E-05	1.1E-07	5.0E-07	5.00E-06	2.45E-09	1.07E-08	5.00E-06	9.98E-10	4.37E-09	1.14E-07	5.01E-07	1.14E-07	1.14E-07
TOTALS:			3.95E-03			1.39E-03			1.74E-04			7.10E-05	0.001	0.005		

Emission Factor Information:

1) Metals: For diesel, emission factors from AP-42 (5/10), Table 1.3-10. For RFO, EFs from AP-42 (10/96), Table 1.11-4, for Atomizing burner. For natural gas, EFs from AP-42 (7/98), Table 1.4-4. For propane, EFs for nat. gas were applied. EFs for diesel expressed in pounds of pollutant per MMBTU. EFs for RFO expressed in pounds of pollutant per 1000 gallons. EFs for natural gas and propane expressed in pounds of pollutant per MMscf.

2) Organic Pollutants: For diesel, emission factors from AP-42 (5/10), Table 1.3-8, for Distillate oil, and AP-42 (3/04), Table 11.1-13, for Hot oil system fired with No. 2 fuel oil. For diesel, EF for POM taken from Table 1.3-8 rather than summing PAHs, as this is the more conservative emissions estimate. For RFO, EFs from AP-42 (10/96), Table 1.11-5, for Atomizing burner (i.e., except for bis(2-ethylhexyl)phthalate, dichlorobeneze, benz(a)anthracene, and benzo(a)pyrene which rely on values for Vaporizing burner). For HCl from RFO, EF from AP-42 (10/96), Table 1.11-3; 0.1% weight used, per vendor information (i.e., <1000ppm for all halogens). For natural gas, EFs from AP-42 (7/98), Table 1.4-3. For propane, EFs for nat. gas were applied. EFs for diesel and RFO expressed in pounds of pollutant per 1000 gallons. EFs for natural gas and propane expressed in pounds of pollutant per MMscf.

3) Dioxin/Furans: Max Annual Ave value represents emissions from all dioxin/furan mixtures, expressed as equivalent emissions of 2,3,7,8-TCDD, per IDAPA 58.01.01.586. Refer to Dioxin/Furan Mixture table for calculation methodology.

4) POM: Emission factors for POM based on polyaromatic hydrocarbon mixture identified in IDAPA 58.01.01.586. Refer to Polycyclic Organic Matter Mixture table for calculation methodology.

Polycyclic Organic Matter Mixture

Polycyclic Organic Matter (POM)	RFO			#2 Diesel			Nat. Gas			Propane		
	EF	lb/hr	T/yr	EF	lb/hr	T/yr	EF	lb/hr	T/yr	EF	lb/hr	T/yr
Benzo(a)anthracene	4.00E-03	1.43E-05	6.26E-05			0.00E+00	1.80E-06	8.82E-10	3.86E-09	1.80E-06	3.59E-10	1.57E-09
Benzo(b)fluoranthene			0.00E+00	1.00E-04	3.6E-07	1.6E-06	1.80E-06	8.82E-10	3.86E-09	1.80E-06	3.59E-10	1.57E-09
Benzo(k)fluoranthene			0.00E+00			0.00E+00	1.80E-06	8.82E-10	3.86E-09	1.80E-06	3.59E-10	1.57E-09
Benzo(a)pyrene	4.00E-03	1.43E-05	6.26E-05			0.00E+00	1.20E-06	5.88E-10	2.58E-09	1.20E-06	2.40E-10	1.05E-09
Chrysene	4.00E-03	1.43E-05	6.26E-05			0.00E+00	1.80E-06	8.82E-10	3.86E-09	1.80E-06	3.59E-10	1.57E-09
Dibenzo(a,h)anthracene			0.00E+00			0.00E+00	1.20E-06	5.88E-10	2.58E-09	1.20E-06	2.40E-10	1.05E-09
Indeno(1,2,3-cd)pyrene			0.00E+00			0.00E+00	1.80E-06	8.82E-10	3.86E-09	1.80E-06	3.59E-10	1.57E-09
TOTALS:	1.20E-02		1.88E-04	3.30E-03		1.56E-06	1.14E-05		2.45E-08	1.14E-05		9.97E-09

Dioxin/Furan Mixture

Dioxin/Furan	RFO			#2 Diesel			Max lb/hr	Max T/yr	TEF	Adjusted Max Annual Ave lb/hr
	EF	lb/hr	T/yr	EF	lb/hr	T/yr				
1,2,3,4,7,8-HxCDD				6.90E-10	2.46E-12	1.08E-11	2.46E-12	1.08E-11	0.10	2.46E-13
1,2,3,7,8,9-HxCDD				7.60E-10	2.71E-12	1.19E-11	2.71E-12	1.19E-11	0.10	2.71E-13
HxCDD				6.20E-09	2.21E-11	9.70E-11	2.21E-11	9.70E-11		
1,2,3,4,6,7,8-Hp-CDD				1.50E-08	5.36E-11	2.35E-10	5.36E-11	2.35E-10	0.01	5.36E-13
HpCDD				2.00E-08	7.14E-11	3.13E-10	7.14E-11	3.13E-10		
Octa CDD				1.60E-07	5.71E-10	2.50E-09	5.71E-10	2.50E-09	0.0003	1.71E-13
Total PCDD				2.00E-07	7.14E-10	3.13E-09	7.14E-10	3.13E-09		
TCDF				3.30E-09	1.18E-11	5.16E-11	1.18E-11	5.16E-11		
PeCDF				4.80E-10	1.71E-12	7.51E-12	1.71E-12	7.51E-12		
HxCDF				2.00E-09	7.14E-12	3.13E-11	7.14E-12	3.13E-11		
1,2,3,4,6,7,8-HpCDF				3.50E-09	1.25E-11	5.48E-11	1.25E-11	5.48E-11	0.01	1.25E-13
HpCDF				9.70E-09	3.46E-11	1.52E-10	3.46E-11	1.52E-10		
Octa CDF				1.20E-08	4.29E-11	1.88E-10	4.29E-11	1.88E-10	0.0003	1.29E-14
Total PCDF				3.10E-08	1.11E-10	4.85E-10	1.11E-10	4.85E-10		
Total PCDD/PCDF				2.30E-07	8.21E-10	3.60E-09	8.21E-10	3.60E-09		
							TOTAL ADJUSTED:			1.36E-12

Emission Factor Information:

1) Organic Pollutants:

For diesel, emission factors from AP-42 (5/10), Table 1.3-8, for Distillate oil, and AP-42 (3/04), Table 11.1-13, for Hot oil system fired with No. 2 fuel oil.
For diesel, EF for POM taken from Table 1.3-8 rather than summing PAHs, as this is the more conservative emissions estimate.
For RFO, EFs from AP-42 (10/96), Table 1.11-5, for Atomizing burner (i.e., except for dichlorobeneze, benz(a)anthracene, and benzo(a)pyrene which rely on values for Vaporizing burner). For natural gas, EFs from AP-42 (7/98), Table 1.4-3. For propane, EFs for nat. gas were applied.
EFs for diesel and RFO expressed in pounds of pollutant per 1000 gallons. EFs for natural gas and propane expressed in pounds of pollutant per MMscf.

2) Toxic Equivalency Factors:

2005, Van den Berg, et al, The 2005 World Health Organization Reevaluation of Human and Mammalian Toxic Equivalency Factors for Dioxins and Dioxin-Like Compounds, Toxicological Sciences 93(2), 223-241 (2006). Accessible at http://toxsci.oxfordjournals.org/cgi/reprint/93/2/223. Use of the 2005 WHO toxic equivalency factors (TEFs) is consistent with current EPA recommendations for TRI reporting (72 FR 26544, May 10, 2007). IDAPA 58.01.01.586, TAPs Carcinogenic Increments:
Total of adjusted emission rates are treated as a single TAP (2,3,7,8 TCDD)

Greenhouse Gases

GHG	RFO			#2 Diesel			Nat. Gas			Propane			Max lb/hr	Max T/yr
	EF	lb/hr	T/yr	EF	lb/hr	T/yr	EF	lb/hr	T/yr	EF	lb/hr	T/yr		
CO2	22000.0	78.57	344.14	28000.0	100.00	438.00	2.0E+05	98.04	429.41	12500.0	68.31	299.18	100.00	438.00
Methane	0.216	0.001	0.003	0.216	0.001	0.003	2.3	0.001	0.005	0.2	0.001	0.005	0.001	0.005
N2O	0.260	0.001	0.004	0.260	0.001	0.004	2.2	0.001	0.005	0.9	0.005	0.02	0.005	0.02
CO2e		78.88	345.47		100.30	439.33		98.40	430.98		69.85	305.96	100.30	439.33

1) Carbon Dioxide:

For RFO, EF from AP-42, Table 1.11-3 (10/96), for Atomizing burner. Emission factors for #2 diesel and nat. gas from AP-42 (3/04), Table 11.1-13.
For propane, EF from AP-42 (7/08), Table 1.5-1, for propane combustion in commercial boilers. EFs for RFO, diesel, and propane are expressed in pounds of CO2 per 1000 gallons.
EF for natural gas expressed in pounds of CO2 per MMscf of gas fired

2) Methane:

For #2 diesel, emission factors from AP-42 (5/10), Table 1.3-3, Commercial/Institutional/residential combustors, Distillate oil fired; EF expressed in pounds of methane per 1000 gallons.
For RFO, the EF for #2 diesel was applied. For natural gas, EF from AP-42 (7/98), Table 1.4-2, uncontrolled; EF expressed in pounds of methane per MMSCF.
For propane, EF from AP-42 (7/08), Table 1.5-1; EF expressed in pounds methane per 1000 gallons.

3) N2O:

For #2 diesel, emission factor from AP-42 (5/10), Table 1.3-8; EF expressed in pounds of N2O per 1000 gallons. For RFO, the EF for #2 diesel was applied. For natural gas, EF from AP-42 (7/98), Table 1.4-2, uncontrolled; EF expressed in pounds of N2O per MMSCF. For propane, EF from AP-42 (7/08), Table 1.5-1; EF expressed in lb N2O per 1000 gallons.

4) CO2e:

The sum of CO2, methane, and N2O expressed as carbon dioxide equivalent. A global warming potential of 21 was applied to methane. A GWP of 310 was applied to N2O.

Potential To Emit - HAPs

HAP	RFO			#2 Diesel			Nat. Gas			Propane			Max lb/hr	Max T/yr
	EF	lb/hr	T/yr	EF	lb/hr	T/yr	EF	lb/hr	T/yr	EF	lb/hr	T/yr		
Acenaphthene[2]				5.30E-04	1.9E-06	8.3E-06	1.80E-06	8.82E-10	3.86E-09	1.80E-06	3.59E-10	1.57E-09	1.89E-06	8.29E-06
Acenaphthylene[2]				2.00E-04	7.1E-07	3.1E-06	1.80E-06	8.82E-10	3.86E-09	1.80E-06	3.59E-10	1.57E-09	7.14E-07	3.13E-06
Acetaldehyde		0.0E+00	0.0E+00		0.0E+00	0.0E+00		0.0E+00	0.0E+00		0.0E+00	0.0E+00	0.00E+00	0.00E+00
Acrolein		0.0E+00	0.0E+00		0.0E+00	0.0E+00		0.0E+00	0.0E+00		0.0E+00	0.0E+00	0.00E+00	0.00E+00
Antimony	4.50E-03	1.61E-05	7.04E-05										1.61E-05	7.04E-05
Anthracene[2]	1.00E-04	3.6E-07	1.6E-06	1.80E-04	6.4E-07	2.8E-06	2.40E-06	1.18E-09	5.15E-09	2.40E-06	4.79E-10	2.10E-09	6.43E-07	2.82E-06
Arsenic	6.00E-02	2.14E-04	9.39E-04	4.00E-06	2.00E-06	8.76E-06	2.00E-04	9.80E-08	4.29E-07	2.00E-04	3.99E-08	1.75E-07	2.14E-04	9.39E-04
Benzene							2.10E-03	1.03E-06	4.51E-06	2.10E-03	4.19E-07	1.84E-06	1.03E-06	4.51E-06
Benzo(a)anthracene[2]	4.00E-03	1.4E-05	6.3E-05			0.00E+00	1.80E-06	8.82E-10	3.86E-09	1.80E-06	3.59E-10	1.57E-09	1.43E-05	6.26E-05
Benzo(a)pyrene[2]	4.00E-03	1.4E-05	6.3E-05			0.00E+00	1.20E-06	5.88E-10	2.58E-09	1.20E-06	2.40E-10	1.05E-09	1.43E-05	6.26E-05
Benzo(b)fluoranthene[2]			0.00E+00	1.00E-04	3.6E-07	1.6E-06	1.80E-06	8.82E-10	3.86E-09	1.80E-06	3.59E-10	1.57E-09	3.57E-07	1.56E-06
Benzo(e)pyrene[2]		0.0E+00	0.0E+00		0.0E+00	0.0E+00		0.0E+00	0.0E+00		0.0E+00	0.0E+00	0.00E+00	0.00E+00
Benzo(g,h,i)perylene[2]							1.20E-06	5.88E-10	2.58E-09	1.20E-06	2.40E-10	1.05E-09	5.88E-10	2.58E-09
Benzo(k)fluoranthene[2]			0.00E+00			0.00E+00	1.80E-06	8.82E-10	3.86E-09	1.80E-06	3.59E-10	1.57E-09	8.82E-10	3.86E-09
Beryllium	1.80E-03	6.43E-06	2.82E-05	3.00E-06	1.50E-06	6.57E-06	1.20E-05	5.88E-09	2.58E-08	1.20E-05	2.40E-09	1.05E-08	6.43E-06	2.82E-05
Bis(2-ethylhexyl)phthalate	2.20E-03	7.9E-06	3.4E-05										7.86E-06	3.44E-05
1,3-Butadiene		0.0E+00	0.0E+00		0.0E+00	0.0E+00		0.0E+00	0.0E+00		0.0E+00	0.0E+00	0.00E+00	0.00E+00
Cadmium	1.20E-02	4.29E-05	1.88E-04	3.00E-06	1.50E-06	6.57E-06	1.10E-03	5.39E-07	2.36E-06	1.10E-03	2.20E-07	9.62E-07	4.29E-05	1.88E-04
Carbon Disulfide		0.0E+00	0.0E+00		0.0E+00	0.0E+00		0.0E+00	0.0E+00		0.0E+00	0.0E+00	0.00E+00	0.00E+00
Chromium	1.80E-01	6.43E-04	2.82E-03	3.00E-06	1.50E-06	6.57E-06	1.40E-03	6.86E-07	3.01E-06	1.40E-03	2.80E-07	1.22E-06	6.43E-04	2.82E-03
Hexavalent Chromium		0.0E+00	0.0E+00		0.0E+00	0.0E+00		0.0E+00	0.0E+00		0.0E+00	0.0E+00	0.00E+00	0.00E+00
Chrysene[2]	4.00E-03	1.4E-05	6.3E-05			0.00E+00	1.80E-06	8.82E-10	3.86E-09	1.80E-06	3.59E-10	1.57E-09	1.43E-05	6.26E-05
Cobalt	5.20E-03	1.86E-05	8.13E-05				8.40E-05	4.12E-08	1.80E-07	8.40E-05	1.68E-08	7.35E-08	1.86E-05	8.13E-05
Cumene		0.0E+00	0.0E+00		0.0E+00	0.0E+00		0.0E+00	0.0E+00		0.0E+00	0.0E+00	0.00E+00	0.00E+00
Dibenzo(a,h)anthracene[2]			0.00E+00			0.00E+00	1.20E-06	5.88E-10	2.58E-09	1.20E-06	2.40E-10	1.05E-09	5.88E-10	2.58E-09
Dibutylphthalate	3.40E-05	1.2E-07	5.3E-07										1.21E-07	5.32E-07
Dichlorobenzene	8.00E-07	2.9E-09	1.3E-08				1.20E-03	5.88E-07	2.58E-06	1.20E-03	2.40E-07	1.05E-06	5.88E-07	2.58E-06
Ethyl Benzene		0.0E+00	0.0E+00		0.0E+00	0.0E+00		0.0E+00	0.0E+00		0.0E+00	0.0E+00	0.00E+00	0.00E+00
Fluoranthene[2]				4.40E-05	1.6E-07	6.9E-07	3.00E-06	1.47E-09	6.44E-09	3.00E-06	5.99E-10	2.62E-09	1.57E-07	6.88E-07
Fluorene[2]				3.20E-05	1.1E-07	5.0E-07	2.80E-06	1.37E-09	6.01E-09	2.80E-06	5.59E-10	2.45E-09	1.14E-07	5.01E-07
Formaldehyde				6.10E-02	2.2E-04	9.5E-04	7.50E-02	3.68E-05	1.61E-04	7.50E-02	1.50E-05	6.56E-05	2.18E-04	9.54E-04
Hexane							1.8	8.82E-04	3.86E-03	1.8	3.59E-04	1.57E-03	8.82E-04	3.86E-03
Hydrochloric Acid	6.6	2.4E-02	1.03E-01			0.00E+00			0.00E+00			0.00E+00	2.36E-02	1.03E-01
Indeno(1,2,3-cd)pyrene[2]			0.00E+00			0.00E+00	1.80E-06	8.82E-10	3.86E-09	1.80E-06	3.59E-10	1.57E-09	8.82E-10	3.86E-09
Lead	0.50	0.0018	0.01	9.0E-06	2.5E-10	1.97E-05	5.0E-04	0.0000	1.07E-06	5.0E-04	0.000	4.37E-07	0.00	0.01
Manganese	5.00E-02	1.79E-04	7.82E-04	6.00E-06	3.00E-06	1.31E-05	3.80E-04	1.86E-07	8.16E-07	3.80E-04	7.59E-08	3.32E-07	1.79E-04	7.82E-04
Mercury				3.00E-06	1.50E-06	6.57E-06	2.60E-04	1.27E-07	5.58E-07	2.60E-04	5.19E-08	2.27E-07	1.50E-06	6.57E-06
Methyl Chloroform		0.0E+00	0.0E+00		0.0E+00	0.0E+00		0.0E+00	0.0E+00		0.0E+00	0.0E+00	0.00E+00	0.00E+00
Methyl Ethyl Ketone		0.0E+00	0.0E+00		0.0E+00	0.0E+00		0.0E+00	0.0E+00		0.0E+00	0.0E+00	0.00E+00	0.00E+00
2-Methylnaphthalene[2]							1.80E-06	8.82E-10	3.86E-09	1.80E-06	3.59E-10	1.57E-09	8.82E-10	3.86E-09
3-Methylchloranthrene[2]							2.40E-05	1.18E-08	5.15E-08	2.40E-05	4.79E-09	2.10E-08	1.18E-08	5.15E-08
Naphthalene[2]	9.20E-05	3.3E-07	1.4E-06	1.70E-02	6.1E-05	2.7E-04	6.10E-04	2.99E-07	1.31E-06	6.10E-04	1.22E-07	5.34E-07	6.07E-05	2.66E-04
Nickel	1.60E-01	5.71E-04	2.50E-03	3.00E-06	1.50E-06	6.57E-06	2.10E-03	1.03E-06	4.51E-06	2.10E-03	4.19E-07	1.84E-06	5.71E-04	2.50E-03
Pentane							2.60E+00	1.27E-03	5.58E-03	2.60E+00	5.19E-04	2.27E-03	1.27E-03	5.58E-03
Perylene[2]		0.0E+00	0.0E+00		0.0E+00	0.0E+00		0.0E+00	0.0E+00		0.0E+00	0.0E+00	0.00E+00	0.00E+00
Phenanthrene[2]	1.00E-04	3.6E-07	1.6E-06	4.90E-03	1.8E-05	7.7E-05	1.70E-05	8.33E-09	3.65E-08	1.70E-05	3.39E-09	1.49E-08	1.75E-05	7.67E-05
Phenol	2.80E-05	1.0E-07	4.4E-07										1.00E-07	4.38E-07
Phosphorus		0.0E+00	0.0E+00		0.0E+00	0.0E+00		0.0E+00	0.0E+00		0.0E+00	0.0E+00	0.00E+00	0.00E+00
POM (see below)													1.25E-04	5.48E-04
Propionaldehyde		0.0E+00	0.0E+00		0.0E+00	0.0E+00		0.0E+00	0.0E+00		0.0E+00	0.0E+00	0.00E+00	0.00E+00
Pyrene[2]	8.30E-06	3.0E-08	1.3E-07	3.20E-05	1.1E-07	5.0E-07	5.00E-06	2.45E-09	1.07E-08	5.00E-06	9.98E-10	4.37E-09	1.14E-07	5.01E-07
Selenium				1.50E-05	7.50E-06	3.29E-05	2.40E-05	1.18E-08	5.15E-08	2.40E-05	4.79E-09	2.10E-08	7.50E-06	3.29E-05
Styrene		0.0E+00	0.0E+00		0.0E+00	0.0E+00		0.0E+00	0.0E+00		0.0E+00	0.0E+00	0.00E+00	0.00E+00
2,3,7,8-TCDD		0.0E+00	0.0E+00		0.0E+00	0.0E+00		0.0E+00	0.0E+00		0.0E+00	0.0E+00	0.00E+00	0.00E+00
Toluene							3.40E-03	1.67E-06	7.30E-06	3.40E-03	6.79E-07	2.97E-06	1.67E-06	7.30E-06
Total PCDD/PCDF[3]				2.3E-07	8.2E-10	3.6E-09							8.21E-10	3.60E-09
Trichloroethylene		0.0E+00	0.0E+00		0.0E+00	0.0E+00		0.0E+00	0.0E+00		0.0E+00	0.0E+00	0.00E+00	0.00E+00
Xylene		0.0E+00	0.0E+00		0.0E+00	0.0E+00		0.0E+00	0.0E+00		0.0E+00	0.0E+00	0.00E+00	0.00E+00
TOTALS:			0.12			0.00			0.01			0.00	0.03	0.13

1) Metals: For diesel, emission factors from AP-42 (5/10), Table 1.3-10. For RFO, EFs from AP-42 (10/96), Table 1.11-4, for Atomizing burner. For natural gas, EFs from AP-42 (7/98), Table 1.4-4. For propane, EFs for nat. gas were applied. EFs for diesel expressed in pounds of pollutant per MMBTU. EFs for RFO expressed in pounds of pollutant per 1000 gallons. EFs for natural gas and propane expressed in pounds of pollutant per MMscf.

2) Organic Pollutants: For diesel, emission factors from AP-42 (5/10), Table 1.3-8, for Distillate oil, and AP-42 (3/04), Table 11.1-13, for Hot oil system fired with No. 2 fuel oil. For RFO, EFs from AP-42 (10/96), Table 1.11-5, for Atomizing burner (i.e., except for bis(2-ethylhexyl)phthalate, dichlorobeneze, benz(a)anthracene, and benzo(a)pyrene which rely on values for Vaporizing burner). For HCl from RFO, EF from AP-42 (10/96), Table 1.11-3; 0.1% weight used, per vendor information (i.e., <1000ppm for all halogens). For natural gas, EFs from AP-42 (7/98), Table 1.4-3. For propane, EFs for nat. gas were applied. EFs for diesel and RFO expressed in pounds of pollutant per 1000 gallons. EFs for natural gas and propane expressed in pounds of pollutant per MMscf.

3) POM: Maximum PTE estimates for POM based on polycyclic organic matter mixture as defined by 1900 CAA Amendments. Compounds included in the mixture are denoted in the table. To avoid double counting, the total, maximum PTE estimates do not include POM (i.e., individual compounds are summed separately) or 2, 3, 7, 8-TCDD (included in Total PCDD/PCDF).

Emission Unit:	Operations Generator
Manufacturer/Model:	Cummins, Model QST30-G2, 2006 Model year
Fuel Type(s):	#2 Diesel
Rated Generator Capacity (kW):	800
Gross Engine Output (bhp):	1200
Calculated Fuel Consumption (gal/hr):	60
Calculated Capacity (MMBTU/hr):	8.4
Daily Hours of Operation (hr/d)	13.5
Annual Hours of Operation (hr/yr):	2578.5

Control Equipment:	Tier 2 Certified Engine

Diesel (MMBTU/1000 gallons):	140	(AP-42 (9/85), App A)
Average BSFC (BTU/hp-hr):	7000	(AP-42 (10/96), Table 3.4-1, footnote e)

Potential To Emit - Criteria Pollutants

Criteria Pollutant	#2 Diesel			Max 24hr Ave	Max Annual Ave
	EF	lb/hr	T/yr	lb/hr	lb/hr
CO	0.822	6.90	8.90	3.88	2.03
CO2e		1387.43	1788.74	780.43	408.39
NOx	1.50	12.60	16.24	7.09	3.71
SO2	0.0015	0.01	0.02	0.01	0.00
PM	0.047	0.39	0.51	0.22	0.12
PM10	0.047	0.39	0.51	0.22	0.12
PM2.5	0.056	0.47	0.60	0.26	0.14
VOC	0.305	2.56	3.30	1.44	0.75
Lead					

Emission Factor Information:

1) Carbon Monoxide: Emission factor from 40 CFR 89.112, Table 1, for Tier 2 engine >560kW. Expressed in pounds of CO per MMBTU fuel input.

2) Carbon Dioxide Equivalent: Refer to Greenhouse Gases table for calculation methodology.

3) Nitrogen Oxides: Emission factor from 40 CFR 89.112, Table 1, for Tier 2 engine >560kW. Applied EF for NMHC+NOx, assuming 100% NOx. EF expressed in pounds of NOx per MMBTU fuel input.

4) Sulfur Dioxide: Emission factor from AP-42 (10/96), Table 3.4-1, for Diesel fuel; sulfur content is 0.0015%. EF expressed as pounds SO2 per MMBTU fuel input.

5) Particulate Matter: Emission factor from 40 CFR 89.112, Table 1, for Tier 2 engine >560kW. Expressed in pounds of PM per MMBTU fuel input.

6) PM-10: Assumed all PM equal to PM-10. Expressed in pounds of PM-10 per MMBTU fuel input.

7) PM-2.5: Emission factor from AP-42 (10/96), Table 3.4-2, summed EFs for filterable PM<3 and condensable PM. Expressed in pounds of PM-2.5 per MMBTU fuel input.

8) VOCs: Emission factor from 40 CFR 89.112, Table 1, for Tier 1 engine >560kW, assumed HC is equal to VOC. Expressed in pounds of VOC per MMBTU fuel input.

9) Lead: No emission factor identified for lead emissions from large uncontrolled stationary diesel engines.

Potential To Emit - Non-Carcinogenic TAPs

Non-Carcinogen TAP	#2 Diesel			Max 24hr Ave	Max Annual Ave
	EF	lb/hr	T/yr	lb/hr	lb/hr
Acrolein	7.88E-06	6.62E-05	8.53E-05	3.72E-05	1.95E-05
Naphthalene	1.30E-04	1.09E-03	1.41E-03	6.14E-04	3.21E-04
Toluene	2.81E-04	2.36E-03	3.04E-03	1.33E-03	6.95E-04
Xylenes	1.93E-04	1.62E-03	2.09E-03	9.12E-04	4.77E-04
TOTALS:			6.63E-03		

Potential To Emit - Carcinogen TAPs

Carcinogen TAP	#2 Diesel			Max 24hr Ave	Max Annual Ave
	EF	lb/hr	T/yr	lb/hr	lb/hr
Acenaphthene	4.68E-06	3.93E-05	5.07E-05	2.21E-05	1.16E-05
Acenaphthylene	9.23E-06	7.75E-05	1.00E-04	4.36E-05	2.28E-05
Acetaldehyde	2.52E-05	2.12E-04	2.73E-04	1.19E-04	6.23E-05
Anthracene	1.23E-06	1.03E-05	1.33E-05	5.81E-06	3.04E-06
Benzene	7.76E-04	6.52E-03	8.40E-03	3.67E-03	1.92E-03
Benzo(a)pyrene	2.57E-07	2.16E-06	2.78E-06	1.21E-06	6.35E-07
Benzo(g,h,i)perylene	5.56E-07	4.67E-06	6.02E-06	2.63E-06	1.37E-06
Fluoranthene	4.03E-06	3.39E-05	4.36E-05	1.90E-05	9.96E-06
Fluorene	1.28E-05	1.08E-04	1.39E-04	6.05E-05	3.16E-05
Formaldehyde	7.89E-05	6.63E-04	8.54E-04	3.73E-04	1.95E-04
Naphthalene	1.30E-04	1.09E-03	1.41E-03	6.14E-04	3.21E-04
Phenanthrene	4.08E-05	3.43E-04	4.42E-04	1.93E-04	1.01E-04
POM (see below)	4.49E-06	3.77E-05	4.86E-05	2.12E-05	1.11E-05
Pyrene	3.71E-06	3.12E-05	4.02E-05	1.75E-05	9.17E-06
TOTALS:			1.18E-02		

Polycyclic Organic Matter Mixture

Polycyclic Organic Matter (POM)	#2 Diesel		
	EF	lb/hr	T/yr
Benzo(a)anthracene	6.22E-07	5.22E-06	6.74E-06
Benzo(b)fluoranthene	1.11E-06	9.32E-06	1.20E-05
Benzo(k)fluoranthene	2.18E-07	1.83E-06	2.36E-06
Benzo(a)pyrene	2.57E-07	2.16E-06	2.78E-06
Chrysene	1.52E-06	1.28E-05	1.65E-05
Dibenzo(a,h)anthracene	3.46E-07	2.91E-06	3.75E-06
Indeno(1,2,3-cd)pyrene	4.14E-07	3.48E-06	4.48E-06
TOTALS:	4.49E-06		4.86E-05

Emission Factor Information:

1) TAPs: Emission factor from AP-42 (10/96), Tables 3.4-3 and 3.4-4. Expressed in pounds of pollutant per MMBTU of fuel input.

2) POM: Emission factors for POM based on polyaromatic hydrocarbon mixture identified in IDAPA 58.01.01.586. Refer to Polycyclic Organic Matter Mixture table for calculation methodology.

Greenhouse Gases

GHG	#2 Diesel		
	EF	lb/hr	T/yr
CO2	165.0	1386.00	1786.9
Methane	0.008	0.07	0.09
CO2e		1387.43	1788.74

Emission Factor Information:

1) Carbon Dioxide: Emission factor from AP-42 (10/96), Table 3.4-1. EF expressed in pounds of CO2 per MMBTU of fuel input.

2) Methane: Emission factor from AP-42 (10/96), Table 3.4-1; assumed 9% of TOC to be methane, per footnote f). EF expressed in pounds of methane per MMBTU of fuel input.

3) CO2e: The sum of CO2 and methane expressed as carbon dioxide equivalent. A global warming potential of 21 was applied to methane.

Potential To Emit - HAPs

HAP	#2 Diesel		
	EF	lb/hr	T/yr
Acenaphthene[2]	4.68E-06	3.93E-05	0.0001
Acenaphthylene[2]	9.23E-06	7.75E-05	0.0001
Acetaldehyde	2.52E-05	2.12E-04	0.000
Acrolein	7.88E-06	6.62E-05	0.0001
Anthracene[2]	1.23E-06	1.03E-05	0.00001
Benzene	7.76E-04	6.52E-03	0.01
Benzo(a)anthracene[2]	6.22E-07	5.22E-06	0.00001
Benzo(a)pyrene[2]	2.57E-07	2.16E-06	0.00000
Benzo(b)fluoranthene[2]	1.11E-06	9.32E-06	0.00001
Benzo(g,h,i)perylene[2]	5.56E-07	4.67E-06	0.00001
Benzo(k)fluoranthene[2]	2.18E-07	1.83E-06	0.00000
Chrysene[2]	1.52E-06	1.28E-05	0.00002
Dibenzo(a,h)anthracene[2]	3.46E-07	2.91E-06	0.00000
Fluoranthene[2]	4.03E-06	3.39E-05	0.0000
Fluorene[2]	1.28E-05	1.08E-04	0.0001
Formaldehyde	7.89E-05	6.63E-04	0.001
Indeno(1,2,3-cd)pyrene[2]	4.14E-07	3.48E-06	0.00000
Naphthalene[2]	1.30E-04	1.09E-03	0.001
Phenanthrene[2]	4.08E-05	3.43E-04	0.000
POM (see below)		1.78E-03	0.0023
Pyrene[2]	3.71E-06	3.12E-05	0.0000
Toluene	2.81E-04	2.36E-03	0.00
Xylene	1.93E-04	1.62E-03	0.00
TOTALS:			0.02

Emission Factor Information:

1) HAPs: Emission factors from AP-42 (10/96), Tables 3.4-3 and 3.4-4. Expressed in pounds of pollutant per MMBTU of fuel input.

2) POM: Maximum PTE estimates for POM based on polycyclic organic matter mixture as defined by 1900 CAA Amendments. Compounds included in the mixture are denoted in the table. To avoid double counting, the total, maximum PTE estimates do not include POM (i.e., individual compounds are summed separately).

Emission Unit:	Night Generator
Manufacturer/Model:	Wacker, Model G-50, mfd in 2010 (equipped with John Deere PowerTech 4045D engine, 2007 Model year)
Fuel Type(s):	#2 Diesel
Rated Generator Capacity (kW):	38
Gross Engine Output (bhp):	67
Calculated Fuel Consumption (gal/hr):	3.35
Calculated Capacity (MMBTU/hr):	0.469
Daily Hours of Operation (hr/d)	24
Annual Hours of Operation (hr/yr):	8760

Control Equipment:	Tier 2 Certified Engine

Diesel (MMBTU/1000 gallons):	140	(AP-42 (9/85), App A)
Average BSFC (BTU/hp-hr):	7000	(AP-42 (10/96), Table 3.4-1, footnote e)

Potential To Emit - Criteria Pollutants

Criteria Pollutant	#2 Diesel			Max 24hr Ave	Max Annual Ave
	EF	lb/hr	T/yr	lb/hr	lb/hr
CO	1.17	0.55	2.41	0.55	0.55
CO2e		76.92	336.89	76.92	76.92
NOx	1.76	0.83	3.62	0.83	0.83
SO2	0.29	0.0004	0.002	0.0004	0.0004
PM	0.09	0.04	0.19	0.04	0.04
PM10	0.09	0.04	0.19	0.04	0.04
PM2.5	0.09	0.04	0.19	0.04	0.04
VOC	0.36	0.17	0.74	0.17	0.17
Lead					

Emission Factor Information:

1) Carbon Monoxide: Emission factor from 40 CFR 89.112, Table 1, for Tier 2 engine 37≤KW<75. Expressed in pounds of CO per MMBTU fuel input.

2) Carbon Dioxide Equivalent: Refer to Greenhouse Gases table for calculation methodology.

3) Nitrogen Oxides: Emission factor from 40 CFR 89.112, Table 1, for Tier 2 engine 37≤KW<75. Applied EF for NMHC+NOx, assuming 100% NOx. EF expressed in pounds of NOx per MMBTU fuel input.

4) Sulfur Dioxide: Emission factor from AP-42 (10/96), Table 3.3-1, for Diesel fuel. Per DEQ methodology, it was assumed that the AP-42 EF is based on use a max fuel sulfur content of 0.5%; a ratio has been applied to incorporate the vendor's specification of 0.0015% sulfur (i.e., 0.0015/0.5=0.003). EF expressed as pounds SO2 per MMBTU fuel input.

5) Particulate Matter: Emission factor from 40 CFR 89.112, Table 1, for Tier 2 engine 37<KW<75. Expressed in pounds of PM per MMBTU fuel input.

6) PM-10: Assumed all PM equal to PM-10. Expressed in pounds of PM-10 per MMBTU fuel input.

7) PM-2.5: Assumed all PM equal to PM-2.5. Expressed in pounds of PM-2.5 per MMBTU fuel input.

8) VOCs: Emission factor from AP-42 (10/96), Table 3.3-1. EF for TOC Exhaust and Crankcase assumed equivalent to VOC. Expressed in pounds of VOC per MMBTU fuel input.

9) Lead: No emission factor identified for lead emissions from large uncontrolled stationary diesel engines.

Potential To Emit - Non-Carcinogenic TAPs

Non-Carcinogen TAP	#2 Diesel			Max 24hr Ave	Max Annual Ave
	EF	lb/hr	T/yr	lb/hr	lb/hr
Acrolein	9.25E-05	4.34E-05	1.90E-04	4.34E-05	4.34E-05
Naphthalene	8.48E-05	3.98E-05	1.74E-04	3.98E-05	3.98E-05
Toluene	4.09E-04	1.92E-04	8.40E-04	1.92E-04	1.92E-04
Xylenes	2.85E-04	1.34E-04	5.85E-04	1.34E-04	1.34E-04
TOTALS:			1.79E-03		

Potential To Emit - Carcinogenic TAPs

Carcinogen TAP	#2 Diesel			Max 24hr Ave	Max Annual Ave
	EF	lb/hr	T/yr	lb/hr	lb/hr
Acenaphthene	1.42E-06	6.66E-07	2.92E-06	6.66E-07	6.66E-07
Acenaphthylene	5.06E-06	2.37E-06	1.04E-05	2.37E-06	2.37E-06
Acetaldehyde	7.67E-04	3.60E-04	1.58E-03	3.60E-04	3.60E-04
Anthracene	1.87E-06	8.77E-07	3.84E-06	8.77E-07	8.77E-07
Benzene	9.33E-04	4.38E-04	1.92E-03	4.38E-04	4.38E-04
Benzo(a)pyrene	1.88E-07	8.82E-08	3.86E-07	8.82E-08	8.82E-08
Benzo(g,h,i)perylene	4.89E-07	2.29E-07	1.00E-06	2.29E-07	2.29E-07
1,3-Butadiene	3.91E-05	1.83E-05	8.03E-05	1.83E-05	1.83E-05
Fluoranthene	7.61E-06	3.57E-06	1.56E-05	3.57E-06	3.57E-06
Fluorene	2.92E-05	1.37E-05	6.00E-05	1.37E-05	1.37E-05
Formaldehyde	1.18E-03	5.53E-04	2.42E-03	5.53E-04	5.53E-04
Naphthalene	8.48E-05	3.98E-05	1.74E-04	3.98E-05	3.98E-05
Phenanthrene	2.94E-05	1.38E-05	6.04E-05	1.38E-05	1.38E-05
POM (see below)	3.43E-06	1.61E-06	7.05E-06	1.61E-06	1.61E-06
Pyrene	4.78E-06	2.24E-06	9.82E-06	2.24E-06	2.24E-06
TOTALS:			6.34E-03		

Polycyclic Organic Matter Mixture

Polycyclic Organic Matter (POM)	#2 Diesel		
	EF	lb/hr	T/yr
Benzo(a)anthracene	1.68E-06	7.88E-07	3.45E-06
Benzo(b)fluoranthene	9.91E-08	4.65E-08	2.04E-07
Benzo(k)fluoranthene	1.55E-07	7.27E-08	3.18E-07
Benzo(a)pyrene	1.88E-07	8.82E-08	3.86E-07
Chrysene	3.53E-07	1.66E-07	7.25E-07
Dibenzo(a,h)anthracene	5.83E-07	2.73E-07	1.20E-06
Indeno(1,2,3-cd)pyrene	3.75E-07	1.76E-07	7.70E-07
TOTALS:	3.43E-06		7.05E-06

Emission Factor Information:

1) TAPs: Emission factor from AP-42 (10/96), Tables 3.3-2. Expressed in pounds of pollutant per MMBTU of fuel input.

2) POM: Emission factors for POM based on polyaromatic hydrocarbon mixture identified in IDAPA 58.01.01.586. Refer to Polycyclic Organic Matter Mixture table for calculation methodology.

Greenhouse Gases

GHG	#2 Diesel		
	EF	lb/hr	T/yr
CO2	164.0	76.92	336.9
CO2e		76.92	336.89

1) Carbon Dioxide: Emission factor from AP-42 (10/96), Table 3.3-1. EF expressed in pounds of CO2 per MMBTU of fuel input.

Potential To Emit - HAPs

HAP	#2 Diesel		
	EF	lb/hr	T/yr
Acenaphthene[2]	1.42E-06	6.66E-07	2.92E-06
Acenaphthylene[2]	5.06E-06	2.37E-06	1.04E-05
Acetaldehyde	7.67E-04	3.60E-04	1.58E-03
Acrolein	9.25E-05	4.34E-05	1.90E-04
Anthracene[2]	1.87E-06	8.77E-07	3.84E-06
Benzene	9.33E-04	4.38E-04	1.92E-03
Benzo(a)anthracene[2]	1.68E-06	7.88E-07	3.45E-06
Benzo(a)pyrene[2]	1.88E-07	8.82E-08	3.86E-07
Benzo(b)fluoranthene[2]	9.91E-08	4.65E-08	2.04E-07
Benzo(g,h,i)perylene[2]	4.89E-07	2.29E-07	1.00E-06
Benzo(k)fluoranthene[2]	1.55E-07	7.27E-08	3.18E-07
1,3-Butadiene	3.91E-05	1.83E-05	8.03E-05
Chrysene[2]	3.53E-07	1.66E-07	7.25E-07
Dibenzo(a,h)anthracene[2]	5.83E-07	2.73E-07	1.20E-06
Fluoranthene[2]	7.61E-06	3.57E-06	1.56E-05
Fluorene[2]	2.92E-05	1.37E-05	6.00E-05
Formaldehyde	1.18E-03	5.53E-04	2.42E-03
Indeno(1,2,3-cd)pyrene[2]	3.75E-07	1.76E-07	7.70E-07
Naphthalene[2]	8.48E-05	3.98E-05	1.74E-04
Phenanthrene[2]	2.94E-05	1.38E-05	6.04E-05
POM (see below)		7.88E-05	3.45E-04
Pyrene[2]	4.78E-06	2.24E-06	9.82E-06
Toluene	4.09E-04	1.92E-04	8.40E-04
Xylenes	2.85E-04	1.34E-04	5.85E-04
TOTALS:			0.01

1) HAPs: Emission factor from AP-42 (10/96), Tables 3.3-2. Expressed in pounds of pollutant per MMBTU of fuel input.

2) POM: Maximum PTE estimates for POM based on polycyclic organic matter mixture as defined by 1900 CAA Amendments. Compounds included in the mixture are denoted in the table. To avoid double counting, the total, maximum PTE estimates do not include POM (i.e., individual compounds are summed separately).

Emission Unit:	Storage Tanks		
Tank Number:	Tank 1	Tank 2	Tank 3
Material:	Asphalt	RFO	#2 Diesel
Capacity (gallons):	30,000	15,000	6,000

Production capacity (T/hr):	450
Daily Hours of Operation (hr/d):	12.5
Max Daily Production (T/d):	5,625
Annual Hours of Operation (hr/yr):	2,388
Max Annual Production (T/yr):	1074375

Tank 1 Throughput

Liquid asphalt in HMA (%):	4	(typical %, per DEQ methodology and AP-42, 11.1 (3/04))
Density of liquid asphalt (lb/gal):	8.69	(http://www.engineeringtoolbox.com/density-materials-d_1652.html)
Asphalt mass per HMA (lb/T):	9.21	
Annual asphalt throughput (gal/yr):	9890678.941	
TOC emission rate (lb/yr) for 300000 gallon annual throughput:	17.97	(Output from TANKS 4.0.9d (AP-42, 7.1), assuming a throughput of 300,000 gallons of asphalt per year. See computer file for details.)
Scaled annual TOC emission rate (lb/yr):	592.45	

Tank 2 Throughput

RFO heating value (MMBTU/1000 gallons):	140	(AP-42, App A)
Total plant capacity (MMBTU/hr):	135.5	(Drum dryer and asphalt tank heater)
Total plant capacity (gallons/hr):	967.9	
Annual RFO throughput (gal/yr):	2310758.93	
TOC emission rate (lb/yr) for 150000 gallon annual throughput:	0.10	(Output from TANKS 4.0.9d (AP-42, 7.1), assuming a throughput of 150,000 gallons of RFO per year. See computer file for details.)
Scaled annual TOC emission rate (lb/yr):	1.54	

Tank 3 Throughput

Diesel heating value (MMBTU/1000 gallons):	140	(AP-42, App A)
Total plant capacity (MMBTU/hr):	135.5	(Drum dryer and asphalt tank heater)
Total plant capacity (gallons/hr):	967.9	
Annual RFO throughput (gal/yr):	2310758.93	
TOC emission rate (lb/yr) for 60000 gallon annual throughput:	4.45	(Output from TANKS 4.0.9d (AP-42, 7.1), assuming a throughput of 60,000 gallons of RFO per year. See computer file for details.)
Scaled annual TOC emission rate (lb/yr):	171.38	

Potential To Emit - Criteria Pollutants

Criteria Pollutant	Tank 1		Tank 2		Tank 3		Total lb/hr	Total T/yr
	lb/hr	T/yr	lb/hr	T/yr	lb/hr	T/yr		
CO	0.024	0.029					0.02	0.03
CO2e	0.014	0.016					0.01	0.02
NOx							0.00	0.00
SO2							0.00	0.00
PM							0.00	0.00
PM10							0.00	0.00
PM2.5							0.00	0.00
VOC	0.248	0.296	0.0006	0.001	0.072	0.086	0.32	0.38
Lead							0.00	0.00

Emission Factor Information:

1) Carbon Monoxide: Emission factor from AP-42 (3/04), page 11.1-9 (i.e., 0.097). EF expressed as a fraction of TOC emissions. No CO emission factor information located for RFO or diesel; CO emissions expected to be very low from unheated tanks.

2) Carbon Dioxide Equivalent: Refer to Greenhouse Gases table for calculation methodology.

3) Nitrogen Oxides: No emission factor information identified; minimal NOx emissions expected from unheated storage tanks.

4) Sulfur Dioxide: No emission factor information identified; minimal SO2 emissions expected from unheated storage tanks.

5) Particulate Matter: No emission factor information identified; minimal PM emissions expected from unheated storage tanks.

6) PM-10: No emission factor information identified; minimal PM10 emissions expected from unheated storage tanks.

7) PM-2.5: No emission factor information identified; minimal PM2.5 emissions expected from unheated storage tanks.

8) VOCs: For Tank 1, onverted calculated TOC emissions rate to VOC per speciation profile in Table 11.1-16 (100% of TOC = VOC). For Tanks 2 and 3, assume all TOC is VOC.

9) Lead: No emission factor information identified; minimal lead emissions expected from unheated storage tanks.

Potential To Emit - Non-Carcinogenic TAPs

Non-Carcinogen TAP	Tank 1			Max 24hr Ave	Max Annual Ave
	EF	lb/hr	T/yr	lb/hr	lb/hr
Acetone	0.055	1.36E-04	1.63E-04	7.11E-05	3.72E-05
Bromomethane	0.0049	1.22E-05	1.45E-05	6.33E-06	3.31E-06
Carbon Disulfide	0.016	3.97E-05	4.74E-05	2.07E-05	1.08E-05
Chloroethane/Ethyl chloride	0.004	9.93E-06	1.18E-05	5.17E-06	2.71E-06
Chloromethane/Methyl chloride	0.023	5.71E-05	6.81E-05	2.97E-05	1.56E-05
Ethyl Benzene	0.038	9.43E-05	1.13E-04	4.91E-05	2.57E-05
Hexane	0.10	2.48E-04	2.96E-04	1.29E-04	6.76E-05
Methyl Ethyl Ketone	0.039	9.68E-05	1.16E-04	5.04E-05	2.64E-05
Styrene	0.0054	1.34E-05	1.60E-05	6.98E-06	3.65E-06
Toluene	0.062	1.54E-04	1.84E-04	8.01E-05	4.19E-05
Xylenes	0.257	6.38E-04	7.61E-04	3.32E-04	1.74E-04
TOTALS:			0.0018		

Potential To Emit - Carcinogenic TAPs

Carcinogen TAP	Tank 1			Max 24hr Ave	Max Annual Ave
	EF	lb/hr	T/yr	lb/hr	lb/hr
Benzene	0.032	7.94E-05	9.48E-05	4.14E-05	2.16E-05
Chloromethane/Methyl chloride	0.023	5.71E-05	6.81E-05	2.97E-05	1.56E-05
Formaldehyde	0.69	1.71E-03	2.04E-03	8.92E-04	4.67E-04
Methylene Chloride/Dichloromethane	0.00027	6.70E-07	8.00E-07	3.49E-07	1.83E-07
TOTALS:			0.0022		

Emission Factor Information:

1) TAPs: Based on speciation factors from AP-42 (3/04), Tables 11.1-16. Speciation factors are converted from percentages and multiplied by the scaled TOC emission rates from TANKS to derive the emissions rates in the PTE tables above. All EFs expressed as percentages TOC emission rates. No speciation factors located for RFO and/or diesel fuel; TAP emissions expected to be very low from unheated tanks.

Greenhouse Gases

GHG	Tank 1		
	EF	lb/hr	T/yr
Methane	0.26	0.0006	0.0008
CO2e		0.014	0.016

1) Methane: Based on speciation factor from AP-42 (3/04), Table 11.1-16. Speciation factor is converted from a percentage and then multiplied by the scaled TOC emission rates from TANKS to derive the emissions rates in the PTE tables above. All EFs expressed as percentages TOC emission rates. No speciation factors located for RFO and/or diesel fuel; GHG emissions expected to be very low from unheated tanks.

2) CO2e: A global warming potential of 21 was applied to methane to derive carbon dioxide equivalent estimates.

Potential To Emit - HAPs

HAP	Tank 1		
	EF	lb/hr	T/yr
Benzene	0.032	7.94E-05	9.48E-05
Bromomethane	0.0049	1.22E-05	1.45E-05
Carbon Disulfide	0.016	3.97E-05	4.74E-05
Chloroethane/Ethyl Chloride	0.004	9.93E-06	1.18E-05
Chloromethane/Methyl chloride	0.023	5.71E-05	6.81E-05
Ethyl Benzene	0.038	9.43E-05	1.13E-04
Formaldehyde	0.69	1.71E-03	2.04E-03
Hexane	0.10	2.48E-04	2.96E-04
Methyl Ethyl Ketone	0.039	9.68E-05	1.16E-04
Methylene Chloride/Dichloromethane	0.00027	6.70E-07	8.00E-07
Styrene	0.0054	1.34E-05	1.60E-05
Toluene	0.062	1.54E-04	1.84E-04
Xylene	0.257	6.38E-04	7.61E-04
TOTALS:			0.00

1) HAPs: Based on speciation factors from AP-42 (3/04), Tables 11.1-16. Speciation factors are converted from percentages and multiplied by the scaled TOC emission rates from TANKS to derive the emissions rates in the PTE tables above. All EFs expressed as percentages TOC emission rates. No speciation factors located for RFO and/or diesel fuel; HAP emissions expected to be very low from unheated tanks.

Emission Unit:	Silo Filling
Production capacity (T/hr):	450
Daily Hours of Operation (hr/d):	12.5
Max Daily Production (T/d):	5625
Annual Hours of Operation (hr/yr):	2387.5
Max Annual Production (T/yr):	1074375

Potential To Emit - Criteria Pollutants

Criteria Pollutant	Silo Filling			Max 24hr Ave	Max Annual Ave
	EF	lb/hr	T/yr	lb/hr	lb/hr
CO	1.18E-03	0.53	0.63	0.28	0.14
CO2e		0.30	0.36	0.16	0.08
NOx					
SO2					
PM	5.86E-04	0.26	0.31	0.14	0.07
PM10	5.86E-04	0.26	0.31	0.14	0.07
PM2.5	5.86E-04	0.26	0.31	0.14	0.07
VOC	1.22E-02	5.49	6.55	2.86	1.50
Lead					

Emission Factor Information:

1) Carbon Monoxide: Emission factor from AP-42 (3/04), Table 11.1-14, for Silo filling. Default values of -0.5 and 325°F were used for asphalt volatility (V) and HMA mix temperature (T). Expressed in pounds of CO per ton of HMA produced.

2) Carbon Dioxide Equivalent: Refer to Greenhouse Gases table for calculation methodology.

3) Nitrogen Oxides: No emission factor identified for NOx emissions from silo filling operations.

4) Sulfur Dioxide: No emission factor identified for SO2 emissions from silo filling operations.

5) Particulate Matter: Emission factor from AP-42 (3/04), Table 11.1-14, for Silo filling, Total PM. Default values of -0.5 and 325°F were used for asphalt volatility (V) and HMA mix temperature (T). Expressed in pounds of PM per ton of HMA produced.

6) PM-10: Emission factor from AP-42 (3/04), Table 11.1-14, for Silo filling, Total PM. Default values of -0.5 and 325°F were used for asphalt volatility (V) and HMA mix temperature (T). Per footnote b), all PM assumed to be PM10. Expressed in pounds of PM10 per ton of HMA produced.

7) PM-2.5: Emission factor from AP-42 (3/04), Table 11.1-14, for Silo filling, Total PM. Default values of -0.5 and 325°F were used for asphalt volatility (V) and HMA mix temperature (T). Per footnote b), all PM assumed to be PM2.5. Expressed in pounds of PM2.5 per ton of HMA produced.

8) VOCs: Emission factor from AP-42 (3/04), Table 11.1-14, for Silo filling, TOC. Default values of -0.5 and 325°F were used for asphalt volatility (V) and HMA mix temperature (T). Converted from TOC to VOC per speciation profile in Table 11.1-16 (100% of TOC = VOC). EF expressed in pounds of VOC per ton of HMA produced.

9) Lead: No emission factor identified for lead emissions from silo filling operations.

Emission Factor Estimates and PTE for Organic PM and TOC

Pollutant	EF (lbs/T HMA)	PTE	
		lb/hr	T/yr
Organic PM	2.54E-04	1.14E-01	1.36E-01
TOC	1.22E-02	5.49E+00	6.55E+00

Potential To Emit - Non-Carcinogenic TAPs

Non-Carcinogen TAP	Silo Filling			Max 24hr Ave	Max Annual Ave
	EF	lb/hr	T/yr	lb/hr	lb/hr
Acetone	0.055	3.02E-03	3.60E-03	1.57E-03	8.23E-04
Bromomethane/Methyl bromide	0.0049	2.69E-04	3.21E-04	1.40E-04	7.33E-05
Carbon Disulfide	0.016	8.78E-04	1.05E-03	4.58E-04	2.39E-04
Chloroethane/Ethyl chloride	0.004	2.20E-04	2.62E-04	1.14E-04	5.99E-05
Chloromethane/Methyl chloride	0.023	1.26E-03	1.51E-03	6.58E-04	3.44E-04
Ethyl Benzene	0.038	2.09E-03	2.49E-03	1.09E-03	5.69E-04
Hexane	0.10	5.49E-03	6.55E-03	2.86E-03	1.50E-03
Methyl Ethyl Ketone	0.039	2.14E-03	2.56E-03	1.12E-03	5.84E-04
Naphthalene	1.82	2.08E-03	2.48E-03	1.08E-03	5.67E-04
Phenol	0.0	0.00E+00	0.00E+00	0.00E+00	0.00E+00
Styrene	0.0054	2.96E-04	3.54E-04	1.54E-04	8.08E-05
Toluene	0.062	3.40E-03	4.06E-03	1.77E-03	9.28E-04
Xylenes (o-, m-, p-isomers)	0.257	1.41E-02	1.68E-02	7.35E-03	3.85E-03
TOTALS:			4.21E-02		

Potential To Emit - Carcinogenic TAPs

Carcinogen TAP	Silo Filling			Max 24hr Ave	Max Annual Ave
	EF	lb/hr	T/yr	lb/hr	lb/hr
Acenaphthene	0.47	5.37E-04	6.41E-04	2.80E-04	1.46E-04
Acenaphthylene	0.014	1.60E-05	1.91E-05	8.33E-06	4.36E-06
Anthracene	0.13	1.49E-04	1.77E-04	7.74E-05	4.05E-05
Benzene	0.032	1.76E-03	2.10E-03	9.15E-04	4.79E-04
Benzo(a)pyrene	0.0	0.00E+00	0.00E+00	0.00E+00	0.00E+00
Benzo(g,h,i)perylene	0.0	0.00E+00	0.00E+00	0.00E+00	0.00E+00
Benzo(e)pyrene	0.0095	1.09E-05	1.30E-05	5.66E-06	2.96E-06
Chloromethane/Methyl chloride	0.023	1.26E-03	1.51E-03	6.58E-04	3.44E-04
Fluoranthene	0.15	1.71E-04	2.05E-04	8.93E-05	4.67E-05
Fluorene	1.01	1.15E-03	1.38E-03	6.01E-04	3.15E-04
Formaldehyde	0.69	3.79E-02	4.52E-02	1.97E-02	1.03E-02
Methylene Chloride/Dichloromethane	0.00027	1.48E-05	1.77E-05	7.72E-06	4.04E-06
2-Methylnaphthalene	5.27	6.02E-03	7.19E-03	3.14E-03	1.64E-03
Naphthalene	1.82	2.08E-03	2.48E-03	1.08E-03	5.67E-04
Perylene	0.030	3.43E-05	4.09E-05	1.79E-05	9.35E-06
Phenanthrene	1.80	2.06E-03	2.46E-03	1.07E-03	5.61E-04
POM (see below)	2.66E-01	3.04E-04	3.63E-04	1.58E-04	8.29E-05
Pyrene	0.44	5.03E-04	6.00E-04	2.62E-04	1.37E-04
TOTALS:			6.44E-02		

Polycyclic Organic Matter Mixture

Polycyclic Organic Matter (POM)	Silo Filling		
	EF	lb/hr	T/yr
Benzo(a)anthracene	0.056	6.40E-05	7.64E-05
Benzo(b)fluoranthene	0.0	0.00E+00	0.00E+00
Benzo(k)fluoranthene	0.0	0.00E+00	0.00E+00
Benzo(a)pyrene	0.0	0.00E+00	0.00E+00
Chrysene	0.21	2.40E-04	2.87E-04
Dibenzo(a,h)anthracene	0.0	0.00E+00	0.00E+00
Indeno(1,2,3-cd)pyrene	0.0	0.00E+00	0.00E+00
TOTALS:	2.66E-01		3.63E-04

Emission Factor Information:

1) Organic PM and TOC Emission Factors: Emission factor from AP-42 (3/04), Table 11.1-14, for Silo filling. Default values of -0.5 and 325°F were used for asphalt volatility (V) and HMA mix temperature (T). Expressed in pounds of pollutant per ton of HMA produced. PTE based on max hourly and annual HMA production rates.

2) TAPs: Based on speciation factors from AP-42 (3/04), Tables 11.1-15 and 11.1-16. Speciation factors are converted from percentages and multiplied by theappropriate emission rate for Organic PM or TOC to derive the emissions rates in the PTE tables above. All EFs expressed as percentages of Organic PM or TOC emission rates.

3) POM: Emission factors for POM based on polyaromatic hydrocarbon mixture identified in IDAPA 58.01.01.586. Refer to Polycyclic Organic Matter Mixture table for calculation methodology.

Greenhouse Gases

GHG	Silo Filling		
	EF	lb/hr	T/yr
Methane	0.26	0.01	0.02
CO2e		0.30	0.36

1) Methane: Based on speciation factors from AP-42 (3/04), Table 11.1-16. Speciation factor is converted from a percentage and then multiplied by the TOC emission factor to derive the EF in the table. EF expressed in pounds of methane per ton of HMA.

2) CO2e: A global warming potential of 21 was applied to methane to derive carbon dioxide equivalent estimates.

Potential To Emit - HAPs

HAP	Silo Filling		
	EF	lb/hr	T/yr
Acenaphthene[2]	0.47	5.37E-04	0.0006
Acenaphthylene[2]	0.014	1.60E-05	0.0000
Anthracene[2]	0.13	1.49E-04	0.0002
Benzene	0.032	1.76E-03	0.0021
Benzo(a)anthracene[2]	0.056	6.40E-05	0.0001
Benzo(a)pyrene[2]	0.0	0.00E+00	0.0000
Benzo(b)fluoranthene[2]	0.0	0.00E+00	0.0000
Benzo(e)pyrene[2]	0.0095	1.09E-05	0.0000
Benzo(g,h,i)perylene[2]	0.0	0.00E+00	0.0000
Benzo(k)fluoranthene[2]	0.0	0.00E+00	0.0000
Bromomethane	0.0049	2.69E-04	0.0003
Carbon Disulfide	0.016	8.78E-04	0.0010
Chloroethane/Ethyl Chloride	0.004	2.20E-04	0.0003
Chloromethane/Methyl chloride	0.023	1.26E-03	0.0015
Chrysene[2]	0.21	2.40E-04	0.0003
Dibenzo(a,h)anthracene[2]	0.0	0.00E+00	0.0000
Ethyl Benzene	0.038	2.09E-03	0.0025
Fluoranthene[2]	0.15	1.71E-04	0.0002
Fluorene[2]	1.01	1.15E-03	0.0014
Formaldehyde	0.69	3.79E-02	0.0452
Hexane	0.10	5.49E-03	6.55E-03
Indeno(1,2,3-cd)pyrene[2]	0.0	0.00E+00	0.0000
Methyl Ethyl Ketone	3.90E-02	2.14E-03	0.0026
MTBE	0.0	0.00E+00	0.0000
Methylene Chloride	0.00027	1.48E-05	0.0000
2-Methylnaphthalene[2]	5.27	6.02E-03	0.0072
Naphthalene[2]	1.82	2.08E-03	0.0025
Perylene[2]	0.030	3.43E-05	0.0000
Phenanthrene[2]	1.80	2.06E-03	0.0025
Phenol	0.0	0.00E+00	0.0000
POM (see below)		1.30E-02	0.0156
Pyrene[2]	0.44	5.03E-04	0.0006
Styrene	0.0054	2.96E-04	0.0004
Toluene	0.062	3.40E-03	0.0041
Xylene	0.257	1.41E-02	0.0168
TOTALS:			0.10

1) HAPs: Based on speciation factors from AP-42 (3/04), Tables 11.1-15 and 11.1-16. Speciation factors are multiplied by the appropriate emission rate for Organic PM or TOC to derive the emissions rates in the PTE tables above. All EFs expressed as percentages of Organic PM or TOC emission rates.

2) POM: Maximum PTE estimates for POM based on polycyclic organic matter mixture as defined by 1900 CAA Amendments. Compounds included in the mixture are denoted in the table. To avoid double counting, the total, maximum PTE estimates do not include POM (i.e., individual compounds are summed separately).

Emission Unit:	Silo Loadout
Production capacity (T/hr):	450
Daily Hours of Operation (hr/d):	12.5
Max Daily Production (T/d):	5625
Annual Hours of Operation (hr/yr):	2387.5
Max Annual Production (T/yr):	1074375

Potential To Emit - Criteria Pollutants

Criteria Pollutant	Silo Loadout			Max 24hr Ave	Max Annual Ave
	EF	lb/hr	T/yr	lb/hr	lb/hr
CO	1.35E-03	0.61	0.73	0.32	0.17
CO2e		2.56	3.05	1.33	0.70
NOx					
SO2					
PM	5.22E-04	0.23	0.28	0.12	0.06
PM10	5.22E-04	0.23	0.28	0.12	0.06
PM2.5	5.22E-04	0.23	0.28	0.12	0.06
VOC	3.91E-03	1.76	2.10	0.92	0.48
Lead					

Emission Factor Information:

1) Carbon Monoxide: Emission factor from AP-42 (3/04), Table 11.1-14, for Loadout. Default values of -0.5 and 325°F were used for asphalt volatility (V) and HMA mix temperature (T). Expressed in pounds of CO per ton of HMA produced.

2) Carbon Dioxide Equivalent: Refer to Greenhouse Gases table for calculation methodology.

3) Nitrogen Oxides: No emission factor identified for NOx emissions from silo filling operations.

4) Sulfur Dioxide: No emission factor identified for SO2 emissions from silo filling operations.

5) Particulate Matter: Emission factor from AP-42 (3/04), Table 11.1-14, for Loadout, Total PM. Default values of -0.5 and 325°F were used for asphalt volatility (V) and HMA mix temperature (T). Expressed in pounds of PM per ton of HMA produced.

6) PM-10: Emission factor from AP-42 (3/04), Table 11.1-14, for Loadout, Total PM. Default values of -0.5 and 325°F were used for asphalt volatility (V) and HMA mix temperature (T). Per footnote b), all PM assumed to be PM10. Expressed in pounds of PM10 per ton of HMA produced.

7) PM-2.5: Emission factor from AP-42 (3/04), Table 11.1-14, for Loadout, Total PM. Default values of -0.5 and 325°F were used for asphalt volatility (V) and HMA mix temperature (T). Per footnote b), all PM assumed to be PM2.5. Expressed in pounds of PM2.5 per ton of HMA produced.

8) VOCs: Emission factor from AP-42 (3/04), Table 11.1-14, for Loadout, TOC. Default values of -0.5 and 325°F were used for asphalt volatility (V) and HMA mix temperature (T). Converted from TOC to VOC per speciation profile in Table 11.1-16 (94% of TOC = VOC). EF expressed in pounds of VOC per ton of HMA produced.

9) Lead: No emission factor identified for lead emissions from silo filling operations.

Emission Factor Estimates and PTE for Organic PM and TOC

Pollutant	EF (lbs/T HMA)	PTE	
		lb/hr	T/yr
Organic PM	3.41E-04	1.53E-01	1.83E-01
TOC	4.16E-03	1.87E+00	2.23E+00

Potential To Emit - Non-Carcinogenic TAPs

Non-Carcinogen TAP	Silo Loadout			Max 24hr Ave	Max Annual Ave
	EF	lb/hr	T/yr	lb/hr	lb/hr
Acetone	0.046	8.61E-04	1.03E-03	4.49E-04	2.35E-04
Bromomethane/Methyl bromide	0.0096	1.80E-04	2.15E-04	9.36E-05	4.90E-05
Carbon Disulfide	0.013	2.43E-04	2.91E-04	1.27E-04	6.63E-05
Chloroethane/Ethyl Chloride	0.00021	3.93E-06	4.69E-06	2.05E-06	1.07E-06
Chloromethane/Methyl chloride	0.015	2.81E-04	3.35E-04	1.46E-04	7.65E-05
Cumene	0.11	2.06E-03	2.46E-03	1.07E-03	5.61E-04
Ethyl Benzene	0.28	5.24E-03	6.26E-03	2.73E-03	1.43E-03
Hexane	0.15	2.81E-03	3.35E-03	1.46E-03	7.65E-04
Methyl Ethyl Ketone	0.049	9.17E-04	1.10E-03	4.78E-04	2.50E-04
Naphthalene	1.25	1.92E-03	2.29E-03	9.99E-04	5.23E-04
Phenol	1.18	1.81E-03	2.16E-03	9.43E-04	4.94E-04
Styrene	0.0073	1.37E-04	1.63E-04	7.12E-05	3.72E-05
Toluene	0.21	3.93E-03	4.69E-03	2.05E-03	1.07E-03
1,1,1-Trichloroethane/Methyl Chlorofor	0.00	0.00E+00	0.00E+00	0.00E+00	0.00E+00
Xylenes (o-, m-, p-isomers)	0.49	9.17E-03	1.10E-02	4.78E-03	2.50E-03
TOTALS:			3.53E-02		

Potential To Emit - Carcinogenic TAPs

Carcinogen TAP	Silo Loadout			Max 24hr Ave	Max Annual Ave
	EF	lb/hr	T/yr	lb/hr	lb/hr
Acenaphthene	0.26	3.99E-04	4.76E-04	2.08E-04	1.09E-04
Acenaphthylene	0.028	4.30E-05	5.13E-05	2.24E-05	1.17E-05
Anthracene	0.070	1.07E-04	1.28E-04	5.59E-05	2.93E-05
Benzene	0.052	9.73E-04	1.16E-03	5.07E-04	2.65E-04
Benzo(a)pyrene	0.0023	3.53E-06	4.21E-06	1.84E-06	9.62E-07
Benzo(g,h,i)perylene	0.0019	2.92E-06	3.48E-06	1.52E-06	7.95E-07
Benzo(e)pyrene	0.0078	1.20E-05	1.43E-05	6.23E-06	3.26E-06
Chloromethane/Methyl chloride	0.015	2.81E-04	3.35E-04	1.46E-04	7.65E-05
Fluoranthene	0.050	7.67E-05	9.16E-05	4.00E-05	2.09E-05
Fluorene	0.77	1.18E-03	1.41E-03	6.15E-04	3.22E-04
Formaldehyde	0.088	1.65E-03	1.97E-03	8.58E-04	4.49E-04
Methylene Chloride/Dichloromethane	0.0	0.00E+00	0.00E+00	0.00E+00	0.00E+00
2-Methylnaphthalene	2.38	3.65E-03	4.36E-03	1.90E-03	9.95E-04
Naphthalene	1.25	1.92E-03	2.29E-03	9.99E-04	5.23E-04
Perylene	0.022	3.38E-05	4.03E-05	1.76E-05	9.20E-06
Phenanthrene	0.81	1.24E-03	1.48E-03	6.47E-04	3.39E-04
POM (see below)	1.35E-01	2.07E-04	2.47E-04	1.08E-04	5.64E-05
Pyrene	0.15	2.30E-04	2.75E-04	1.20E-04	6.27E-05
Tetrachloroethene/Tetrachloroethylene	0.0077	1.44E-04	1.72E-04	7.51E-05	3.93E-05
Trichloroethene/Trichloroethylene	0.0	0.00E+00	0.00E+00	0.00E+00	0.00E+00
TOTALS:			1.45E-02		

Polycyclic Organic Matter Mixture

Polycyclic Organic Matter (POM)	Silo Loadout		
	EF	lb/hr	T/yr
Benzo(a)anthracene	0.019	2.92E-05	3.48E-05
Benzo(b)fluoranthene	0.0076	1.17E-05	1.39E-05
Benzo(k)fluoranthene	0.0022	3.38E-06	4.03E-06
Benzo(a)pyrene	0.0023	3.53E-06	4.21E-06
Chrysene	0.103	1.58E-04	1.89E-04
Dibenzo(a,h)anthracene	0.00037	5.68E-07	6.78E-07
Indeno(1,2,3-cd)pyrene	0.00047	7.21E-07	8.61E-07
TOTALS:	1.35E-01		2.47E-04

Emission Factor Information:

1) Organic PM and TOC Emission Factors: Emission factor from AP-42 (3/04), Table 11.1-14, for Loadout. Default values of -0.5 and 325°F were used for asphalt volatility (V) and HMA mix temperature (T). Expressed in pounds of pollutant per ton of HMA produced. PTE based on max hourly and annual HMA production rates.

2) TAPs: Based on speciation factors from AP-42 (3/04), Tables 11.1-15 and 11.1-16. Speciation factors are converted from percentages and multiplied by theappropriate emission rate for Organic PM or TOC to derive the emissions rates in the PTE tables above. All EFs expressed as percentages of Organic PM or TOC emission rates.

3) POM: Emission factors for POM based on polyaromatic hydrocarbon mixture identified in IDAPA 58.01.01.586. Refer to Polycyclic Organic Matter Mixture table for calculation methodology.

Greenhouse Gases

GHG	Silo Loadout		
	EF	lb/hr	T/yr
Methane	6.50	0.12	0.15
CO2e		2.56	3.05

1) Methane: Based on speciation factors from AP-42 (3/04), Table 11.1-16. Speciation factor is converted from a percentage and then multiplied by the TOC emission factor to derive the EF in the table. EF expressed in pounds of methane per ton of HMA.

2) CO2e: A global warming potential of 21 was applied to methane to derive carbon dioxide equivalent estimates.

Potential To Emit - HAPs

HAP	Silo Loadout		
	EF	lb/hr	T/yr
Acenaphthene[2]	0.26	3.99E-04	0.0005
Acenaphthylene[2]	0.028	4.30E-05	0.0001
Anthracene[2]	0.070	1.07E-04	0.0001
Benzene	0.052	9.73E-04	0.0012
Benzo(a)anthracene[2]	0.019	2.92E-05	0.0000
Benzo(a)pyrene[2]	0.0023	3.53E-06	0.0000
Benzo(b)fluoranthene[2]	0.0076	1.17E-05	0.0000
Benzo(e)pyrene[2]	0.0078	1.20E-05	0.0000
Benzo(g,h,i)perylene[2]	0.0019	2.92E-06	0.0000
Benzo(k)fluoranthene[2]	0.0022	3.38E-06	0.0000
Bromomethane	0.0096	1.80E-04	0.0002
Carbon Disulfide	0.013	2.43E-04	0.0003
Chloroethane/Ethyl Chloride	0.00021	3.93E-06	0.0000
Chloromethane/Methyl chloride	0.015	2.81E-04	0.0003
Chrysene[2]	0.103	1.58E-04	0.0002
Cumene	0.11	2.06E-03	0.0025
Dibenzo(a,h)anthracene[2]	0.00037	5.68E-07	0.0000
Ethyl Benzene	0.28	5.24E-03	0.0063
Fluoranthene[2]	0.050	7.67E-05	0.0001
Fluorene[2]	0.77	1.18E-03	0.0014
Formaldehyde	0.088	1.65E-03	0.0020
Hexane	0.15	2.81E-03	0.0034
Indeno(1,2,3-cd)pyrene[2]	0.00047	7.21E-07	0.0000
Methyl Chloroform	0.00	0.00E+00	0.0000
Methyl Ethyl Ketone	0.049	9.17E-04	0.0011
MTBE	0.0	0.00E+00	0.0000
Methylene Chloride	0.0	0.00E+00	0.0000
2-Methylnaphthalene[2]	2.38	3.65E-03	0.0044
Naphthalene[2]	1.25	1.92E-03	0.0023
Perylene[2]	0.022	3.38E-05	0.0000
Phenanthrene[2]	0.81	1.24E-03	0.0015
Phenol	1.18	1.81E-03	0.0022
POM (see below)		9.11E-03	0.0109
Pyrene[2]	0.15	2.30E-04	0.0003
Styrene	0.0073	1.37E-04	0.0002
Tetrachloroethene/Tetrachloroethylene	0.0077	1.44E-04	0.0002
Toluene	0.21	3.93E-03	0.0047
Trichloroethene/Trichloroethylene	0.0	0.00E+00	0.0000
Xylene	0.49	9.17E-03	0.0110
TOTALS:			0.05

1) HAPs: Based on speciation factors from AP-42 (3/04), Tables 11.1-15 and 11.1-16. Speciation factors are converted from percentages and multiplied by theappropriate emission rate for Organic PM or TOC to derive the emissions rates in the PTE tables above. All EFs expressed as percentages of Organic PM or TOC emission rates.

2) POM: Maximum PTE estimates for POM based on polycyclic organic matter mixture as defined by 1900 CAA Amendments. Compounds included in the mixture are denoted in the table. To avoid double counting, the total, maximum PTE estimates do not include POM (i.e., individual compounds are summed separately).

Emission Unit:	Aggregate Handling and Screening
Aggregrate in HMA (%):	96 (Typical %, per DEQ methodology and AP-42, 11.1 (3/04))
Production Capacity (T/hr):	432
Daily Hours of Operation (hr/d):	12.5
Max Daily Production (T/d):	5400
Annual Hours of Operation (hr/yr):	2387.5
Max Annual Production (T/yr):	1031400

1. AGGREGATE DROPS FROM FRONT END LOADER

Total tansfer points:	1	From drop to cold bins (stockpile will already be onsite during HMA operations).

Potential To Emit - Criteria Pollutants

Criteria Pollutant	EF	lb/hr	T/yr	Max 24hr Ave lb/hr	Max Annual Ave lb/hr
PM	0.003305	1.43	1.70	0.74	0.39
PM10	0.000765	0.33	0.39	0.17	0.09
PM2.5	0.000116	0.05	0.06	0.03	0.01

Emission Factor Information:

1) Particulate Matter: Emission factor from AP-42, 13.2.4 (11/06), Equation 1: $EF = k (0.0032) \times (U/5)^{1.3} / (M/2)^{1.4}$
Where: k (particle size multiplier) = 0.74 for PM, U (mean wind speed) = 10 mph, and M (moisture content) = 5%. Per DEQ methodology, 10 mph assumed to be base case for mean wind speed. Moisture typically ranges from 3-7% (STAPPA-ALAPCO-EPA, Emission Inventory Improvement Program, Volume II, Chapter 3, Preferred and Alternative Methods for Estimating Air from Hot Mix Asphalt Plants, Final Report, July 1996); 5% is typical for Western Construction HMA plants, per owner. EF expressed in pounds of PM per ton of aggregate.

2) PM-10: Emission factor from AP-42, 13.2.4 (11/06), Equation 1: $EF = k (0.0032) \times (U/5)^{1.3} / (M/2)^{1.4}$
Where: k (particle size multiplier) = 0.35 for PM, U (mean wind speed) = 10 mph, and M (moisture content) = 5%. Per DEQ methodology, 10 mph assumed to be base case for mean wind speed. Moisture typically ranges from 3-7% (STAPPA-ALAPCO-EPA, Emission Inventory Improvement Program, Volume II, Chapter 3, Preferred and Alternative Methods for Estimating Air from Hot Mix Asphalt Plants, Final Report, July 1996); 5% is typical for Western Construction HMA plants, per owner. EF expressed in pounds of PM10 per ton of aggregate.

3) PM-2.5: Emission factor from AP-42, 13.2.4 (11/06), Equation 1: $EF = k (0.0032) \times (U/5)^{1.3} / (M/2)^{1.4}$
Where: k (particle size multiplier) = 0.053 for PM, U (mean wind speed) = 10 mph, and M (moisture content) = 5%. Per DEQ methodology, 10 mph assumed to be base case for mean wind speed. Moisture typically ranges from 3-7% (STAPPA-ALAPCO-EPA, Emission Inventory Improvement Program, Volume II, Chapter 3, Preferred and Alternative Methods for Estimating Air from Hot Mix Asphalt Plants, Final Report, July 1996); 5% is typical for Western Construction HMA plants, per owner. EF expressed in pounds of PM2.5 per ton of aggregate.

4) Other Pollutants: No emissions other than particulate matter are associated with aggregate handling.

2. AGGREGATE DROPS FROM CONVEYERS

Total tansfer points:	4	[1) bins to conveyor, 2) conveyor to screen, 3) screen to conveyor, and 4) conveyor to drum]

Potential To Emit - Criteria Pollutants

Criteria Pollutant	EF	lb/hr	T/yr	Max 24hr Ave lb/hr	Max Annual Ave lb/hr
PM	0.00014	0.24	0.29	0.13	0.07
PM10	0.000046	0.08	0.09	0.04	0.02
PM2.5	0.000013	0.02	0.03	0.01	0.01

Emission Factor Information:

1) Particulate Matter: Emission factor from AP-42 (8/04), Table 11.19.2-2, for Total PM, Conveyor Transfer Point (controlled). Controls for emissions are assumed to be in place, per the requirements of IDAPA 58.01.01.808.01. EF expressed in pounds of PM per ton of aggregate.

2) PM-10: Emission factor from AP-42 (8/04), Table 11.19.2-2, for Total PM-10, Conveyor Transfer Point (controlled). Controls for emissions are assumed to be in place, per the requirements of IDAPA 58.01.01.808.01. EF expressed in pounds of PM-10 per ton of aggregate.

3) PM-2.5: Emission factor from AP-42 (8/04), Table 11.19.2-2, for Total PM-2.5, Conveyor Transfer Point (controlled). Controls for emissions are assumed to be in place, per the requirements of IDAPA 58.01.01.808.01. EF expressed in pounds of PM-2.5 per ton of aggregate.

3. AGGREGATE SCREENING

Screens:	1

Potential To Emit - Criteria Pollutants

Criteria Pollutant	EF	lb/hr	T/yr	Max 24hr Ave lb/hr	Max Annual Ave lb/hr
PM	0.0022	0.95	1.13	0.50	0.26
PM10	0.00074	0.32	0.38	0.17	0.09
PM2.5	0.000050	0.02	0.03	0.01	0.01

Emission Factor Information:

1) Particulate Matter: Emission factor from AP-42 (8/04), Table 11.19.2-2, for Total PM, Screening (controlled). Controls for emissions are assumed to be in place, per the requirements of IDAPA 58.01.01.808.01. EF expressed in pounds of PM per ton of aggregate.

2) PM-10: Emission factor from AP-42 (8/04), Table 11.19.2-2, for Total PM-10, Screening (controlled). Controls for emissions are assumed to be in place, per the requirements of IDAPA 58.01.01.808.01. EF expressed in pounds of PM-10 per ton of aggregate.

3) PM-2.5: Emission factor from AP-42 (8/04), Table 11.19.2-2, for Total PM-2.5, Screening (controlled). Controls for emissions are assumed to be in place, per the requirements of IDAPA 58.01.01.808.01. EF expressed in pounds of PM-2.5 per ton of aggregate.

Potential To Emit - Criteria Pollutants

Criteria Pollutant	HMA Drum Dryer		Asphalt Heater		Operations Generator		Night Generator		Storage Tanks		Silo Filling		Loadout		TOTAL	
	lb/hr	T/yr	lb/hr	T/yr	lb/hr	T/yr	lb/hr	T/yr	lb/hr	T/yr	lb/hr	T/yr	lb/hr	T/yr	lb/hr	T/yr
CO	59.03	70.47	0.04	0.18	6.90	8.90	0.55	2.41	0.02	0.03	0.00	0.00	0.61	0.73	67.16	82.72
CO2e	15262.19	18354.31	100.30	439.33	1387.43	1788.74	76.92	336.89	0.01	0.02	0.00	0.00	2.56	3.05	16829.41	20922.34
NOx	24.75	29.55	0.07	0.31	12.60	16.24	0.83	3.62	0.00	0.00	0.00	0.00	0.00	0.00	38.25	49.72
SO2	26.10	31.16	0.19	0.84	0.01	0.02	0.00	0.00	0.00	0.00	0.00	0.00	0.00	0.00	26.30	32.01
PM	15.11	18.04	0.20	0.88	0.39	0.51	0.04	0.19	0.00	0.00	0.00	0.00	0.23	0.28	15.99	19.90
PM10	10.61	12.67	0.17	0.76	0.39	0.51	0.04	0.19	0.00	0.00	0.00	0.00	0.23	0.28	11.46	14.41
PM2.5	5.21	6.22	0.01	0.03	0.47	0.60	0.04	0.19	0.00	0.00	0.00	0.00	0.23	0.28	5.96	7.32
VOC	19.89	23.74	0.01	0.02	2.56	3.30	0.17	0.74	0.32	0.38	0.00	0.00	1.76	2.10	24.71	30.29
Lead	0.01	0.01	0.00	0.01	0.00	0.00	0.00	0.00	0.00	0.00	0.00	0.00	0.00	0.00	0.01	0.02

Potential To Emit - Non-carcinogen Toxic Air Pollutants

Non-carcinogen TAP	HMA Drum Dryer		Asphalt Heater		Operations Generator		Night Generator		Asphalt Storage Tank		Silo Filling		Loadout		TOTAL	
	lb/hr	T/yr	lb/hr	T/yr	lb/hr	T/yr	lb/hr	T/yr	lb/hr	T/yr	lb/hr	T/yr	lb/hr	T/yr	lb/hr	T/yr
Acetone	3.77E-01	4.49E-01							1.36E-04	1.63E-04	0.00E+00	0.00E+00	8.61E-04	1.03E-03	3.78E-01	4.51E-01
Acrolein	1.17E-02	1.40E-02			6.62E-05	8.53E-05	4.34E-05	1.90E-04							1.18E-02	1.42E-02
Antimony	8.10E-05	9.67E-05	1.61E-05	7.04E-05											9.71E-05	1.67E-04
Barium	2.61E-03	3.12E-03	2.16E-06	9.45E-06											2.61E-03	3.13E-03
Bromomethane	2.69E-04	3.21E-04							1.22E-05	1.45E-05	0.00E+00	0.00E+00	1.80E-04	2.15E-04	4.61E-04	5.50E-04
Carbon Disulfide	8.78E-04	1.05E-03							3.97E-05	4.74E-05	0.00E+00	0.00E+00	2.43E-04	2.91E-04	1.16E-03	1.39E-03
Chloroethane/Ethyl chloride	2.20E-04	2.62E-04							9.93E-06	1.18E-05	0.00E+00	0.00E+00	3.93E-06	4.69E-06	2.33E-04	2.79E-04
Chloromethane/Methyl chloride	1.26E-03	1.51E-03							5.71E-05	6.81E-05	0.00E+00	0.00E+00	2.81E-04	3.35E-04	1.60E-03	1.91E-03
Chromium	2.48E-03	2.95E-03	6.43E-04	2.82E-03											3.12E-03	5.77E-03
Cobalt	1.17E-05	1.40E-05	1.86E-05	8.13E-05											3.03E-05	9.53E-05
Copper	1.40E-03	1.67E-03	3.00E-06	1.31E-05											1.40E-03	1.68E-03
Crotonaldehyde	3.87E-02	4.62E-02													3.87E-02	4.62E-02
Cumene													2.06E-03	2.46E-03	2.06E-03	2.46E-03
Dichlorobenzene			5.88E-07	2.58E-06											5.88E-07	2.58E-06
Ethyl Benzene	1.10E-01	1.31E-01							9.43E-05	1.13E-04	0.00E+00	0.00E+00	5.24E-03	6.26E-03	1.15E-01	1.38E-01
Heptane	4.23E+00	5.05E+00													4.23E+00	5.05E+00
Hexane	4.19E-01	5.01E-01	8.82E-04	3.86E-03					2.48E-04	2.96E-04	0.00E+00	0.00E+00	2.81E-03	3.35E-03	4.23E-01	5.08E-01
Hydrochloric Acid	9.45E-02	1.13E-01	2.36E-02	1.03E-01											1.18E-01	2.16E-01
Manganese	3.47E-03	4.14E-03	1.79E-04	7.82E-04											3.64E-03	4.92E-03
Mercury	1.17E-03	1.40E-03	1.50E-06	6.57E-06											1.17E-03	1.40E-03
Methyl Chloroform	2.16E-02	2.58E-02													2.16E-02	2.58E-02
Methyl Ethyl Ketone	1.11E-02	1.33E-02							9.68E-05	1.16E-04	0.00E+00	0.00E+00	9.17E-04	1.10E-03	1.22E-02	1.45E-02
Molybdenum			5.39E-07	2.36E-06											5.39E-07	2.36E-06
Naphthalene	2.95E-01	3.52E-01	6.07E-05	2.66E-04	1.09E-03	1.41E-03	3.98E-05	1.74E-04			0.00E+00	0.00E+00	1.92E-03	2.29E-03	2.98E-01	3.56E-01
n-Pentane	9.45E-02	1.13E-01	1.27E-03	5.58E-03											9.58E-02	1.18E-01
Phenol	0.00E+00	0.00E+00	1.00E-07	4.38E-07							0.00E+00	0.00E+00	1.81E-03	2.16E-03	1.81E-03	2.16E-03
Phosphorus	1.26E-02	1.50E-02													1.26E-02	1.50E-02
Propionaldehyde	5.85E-02	6.98E-02													5.85E-02	6.98E-02
Quinone	7.20E-02	8.60E-02													7.20E-02	8.60E-02
Selenium	1.58E-04	1.88E-04	7.50E-06	3.29E-05											1.65E-04	2.21E-04
Silver	2.16E-04	2.58E-04													2.16E-04	2.58E-04
Styrene	2.96E-04	3.54E-04							1.34E-05	1.60E-05	0.00E+00	0.00E+00	1.37E-04	1.63E-04	4.47E-04	5.33E-04
Thallium	1.85E-06	2.20E-06													1.85E-06	2.20E-06
Toluene	1.31E+00	1.56E+00	1.67E-06	7.30E-06	2.36E-03	3.04E-03	1.92E-04	8.40E-04	1.54E-04	1.84E-04	0.00E+00	0.00E+00	3.93E-03	4.69E-03	1.32E+00	1.57E+00
Valeraldehyde	3.02E-02	3.60E-02													3.02E-02	3.60E-02
Vanadium			1.13E-06	4.94E-06											1.13E-06	4.94E-06
Xylenes	1.04E-01	1.24E-01			1.62E-03	2.09E-03	1.34E-04	5.85E-04	6.38E-04	7.61E-04	0.00E+00	0.00E+00	9.17E-03	1.10E-02	1.16E-01	1.39E-01
Zinc	2.75E-02	3.28E-02	1.42E-05	6.23E-05											2.75E-02	3.28E-02

Potential To Emit - Carcinogen Toxic Air Pollutants

Carcinogen TAP	HMA Drum Dryer		Asphalt Heater		Operations Generator		Night Generator		Asphalt Storage Tank		Silo Filling		Loadout		TOTAL	
	lb/hr	T/yr	lb/hr	T/yr	lb/hr	T/yr	lb/hr	T/yr	lb/hr	T/yr	lb/hr	T/yr	lb/hr	T/yr	lb/hr	T/yr
Acenaphthene	1.17E-03	1.39E-03	1.89E-06	8.29E-06	3.93E-05	5.07E-05	6.66E-07	2.92E-06			0.00E+00	0.00E+00	3.99E-04	4.76E-04	1.61E-03	1.93E-03
Acenaphthylene	9.92E-03	1.18E-02	7.14E-07	3.13E-06	7.75E-05	1.00E-04	2.37E-06	1.04E-05			0.00E+00	0.00E+00	4.30E-05	5.13E-05	1.00E-02	1.20E-02
Acetaldehyde	5.85E-01	6.98E-01			2.12E-04	2.73E-04	3.60E-04	1.58E-03							5.86E-01	7.00E-01
Anthracene	1.54E-03	1.84E-03	6.43E-07	2.82E-06	1.03E-05	1.33E-05	8.77E-07	3.84E-06			0.00E+00	0.00E+00	1.07E-04	1.28E-04	1.66E-03	1.99E-03
Arsenic	2.52E-04	3.01E-04	2.14E-04	9.39E-04											4.66E-04	1.24E-03
Benzene	1.77E-01	2.12E-01	1.03E-06	4.51E-06	6.52E-03	8.40E-03	4.38E-04	1.92E-03	7.94E-05	9.48E-05	0.00E+00	0.00E+00	9.73E-04	1.16E-03	1.85E-01	2.23E-01
Benzo(a)pyrene	4.41E-06	5.26E-06	1.43E-05	6.26E-05	2.16E-06	2.78E-06	8.82E-08	3.86E-07			0.00E+00	0.00E+00	3.53E-06	4.21E-06	2.45E-05	7.52E-05
Benzo(g,h,i)perylene	1.80E-05	2.15E-05	5.88E-10	2.58E-09	4.67E-06	6.02E-06	2.29E-07	1.00E-06			0.00E+00	0.00E+00	2.92E-06	3.48E-06	2.58E-05	3.20E-05
Benzo(e)pyrene	6.04E-05	7.21E-05									0.00E+00	0.00E+00	1.20E-05	1.43E-05	7.23E-05	8.63E-05
Beryllium	0.00E+00	0.00E+00	6.43E-06	2.82E-05											6.43E-06	2.82E-05
Bis(2-ethylhexyl)phthalate			7.86E-06	3.44E-05											7.86E-06	3.44E-05
1,3-Butadiene							1.83E-05	8.03E-05							1.83E-05	8.03E-05
Cadmium	1.85E-04	2.20E-04	4.29E-05	1.88E-04											2.27E-04	4.08E-04
Chloromethane/Methyl chloride	1.26E-03	1.51E-03							5.71E-05	6.81E-05	0.00E+00	0.00E+00	2.81E-04	3.35E-04	1.60E-03	1.91E-03
Hexavalent Chromium	2.03E-04	2.42E-04													2.03E-04	2.42E-04
Total Dioxin/Furans	5.40E-08	6.45E-08	8.21E-10	3.60E-09											5.48E-08	6.81E-08
Fluoranthene	4.46E-04	5.32E-04	1.57E-07	6.88E-07	3.39E-05	4.36E-05	3.57E-06	1.56E-05			0.00E+00	0.00E+00	7.67E-05	9.16E-05	5.60E-04	6.84E-04
Fluorene	6.10E-03	7.29E-03	1.14E-07	5.01E-07	1.08E-04	1.39E-04	1.37E-05	6.00E-05			0.00E+00	0.00E+00	1.18E-03	1.41E-03	7.41E-03	8.90E-03
Formaldehyde	1.43E+00	1.71E+00	2.18E-04	9.54E-04	6.63E-04	8.54E-04	5.53E-04	2.42E-03	1.71E-03	2.04E-03	0.00E+00	0.00E+00	1.65E-03	1.97E-03	1.44E+00	1.72E+00
3-Methylchloranthrene			8.82E-10	3.86E-09											8.82E-10	3.86E-09
Methylene Chloride/Dichloromethane	1.48E-05	1.77E-05							6.70E-07	8.00E-07	0.00E+00	0.00E+00	0.00E+00	0.00E+00	1.55E-05	1.85E-05
2-Methylnaphthalene	8.25E-02	9.85E-02	1.18E-08	5.15E-08							0.00E+00	0.00E+00	3.65E-03	4.36E-03	8.62E-02	1.03E-01
Naphthalene	2.95E-01	3.52E-01	6.07E-05	2.66E-04	1.09E-03	1.41E-03	3.98E-05	1.74E-04			0.00E+00	0.00E+00	1.92E-03	2.29E-03	2.98E-01	3.56E-01
Nickel	2.84E-02	3.38E-02	5.71E-04	2.50E-03											2.89E-02	3.63E-02
Perylene	3.83E-05	4.57E-05									0.00E+00	0.00E+00	3.38E-05	4.03E-05	7.20E-05	8.60E-05
Phenanthrene	1.24E-02	1.48E-02	1.75E-05	7.67E-05	3.43E-04	4.42E-04	1.38E-05	6.04E-05			0.00E+00	0.00E+00	1.24E-03	1.48E-03	1.40E-02	1.69E-02
POM	5.51E-04	6.57E-04	4.29E-05	1.88E-04	3.77E-05	4.86E-05	1.61E-06	7.05E-06			0.00E+00	0.00E+00	2.07E-04	2.47E-04	8.40E-04	1.15E-03
Pyrene	1.85E-03	2.21E-03	1.14E-07	5.01E-07	3.12E-05	4.02E-05	2.24E-06	9.82E-06			0.00E+00	0.00E+00	2.30E-04	2.75E-04	2.12E-03	2.54E-03
2,3,7,8-TCDD	9.45E-11	1.13E-10													9.45E-11	1.13E-10
Tetrachloroethene/ Tetrachloroethylene													1.44E-04	1.72E-04	1.44E-04	1.72E-04
Trichloroethene/ Trichloroethylene													0.00E+00	0.00E+00	0.00E+00	0.00E+00

Potential To Emit - CAA Hazardous Air Pollutants

HAP	HMA Drum Dryer		Asphalt Heater		Operations Generator		Night Generator		Asphalt Storage Tank		Silo Filling[2]		Loadout		TOTAL	
	lb/hr	T/yr	lb/hr	T/yr	lb/hr	T/yr	lb/hr	T/yr	lb/hr	T/yr	lb/hr	T/yr	lb/hr	T/yr	lb/hr	T/yr
Acenaphthene	6.30E-04	7.52E-04	1.89E-06	8.29E-06	3.93E-05	5.07E-05	6.66E-07	2.92E-06			5.37E-04	6.41E-04	3.99E-04	4.76E-04	0.0016	0.0019
Acenaphthylene	9.90E-03	1.18E-02	7.14E-07	3.13E-06	7.75E-05	1.00E-04	2.37E-06	1.04E-05			1.60E-05	1.91E-05	4.30E-05	5.13E-05	0.0100	0.0120
Acetaldehyde	5.85E-01	6.98E-01	0.00E+00	0.00E+00	2.12E-04	2.73E-04	3.60E-04	1.58E-03							0.5856	0.7002
Acrolein	1.17E-02	1.40E-02	0.00E+00	0.00E+00	6.62E-05	8.53E-05	4.34E-05	1.90E-04							0.0118	0.0142
Antimony	8.10E-05	9.67E-05	1.61E-05	7.04E-05											0.0001	0.0002
Anthracene	1.40E-03	1.67E-03	6.43E-07	2.82E-06	1.03E-05	1.33E-05	8.77E-07	3.84E-06			1.49E-04	1.77E-04	1.07E-04	1.28E-04	0.0017	0.0020
Arsenic	2.52E-04	3.01E-04	2.14E-04	9.39E-04											0.0005	0.0012
Benzene	1.76E-01	2.10E-01	1.03E-06	4.51E-06	6.52E-03	8.40E-03	4.38E-04	1.92E-03	7.94E-05	9.48E-05	1.76E-03	2.10E-03	9.73E-04	1.16E-03	0.1853	0.2232
Benzo(a)anthracene	9.45E-05	1.13E-04	1.43E-05	6.26E-05	5.22E-06	6.74E-06	7.88E-07	3.45E-06			6.40E-05	7.64E-05	2.92E-05	3.48E-05	0.0002	0.0003
Benzo(a)pyrene	4.41E-06	5.26E-06	1.43E-05	6.26E-05	2.16E-06	2.78E-06	8.82E-08	3.86E-07			0.00E+00	0.00E+00	3.53E-06	4.21E-06	0.0000	0.0001
Benzo(b)fluoranthene	4.50E-05	5.37E-05	3.57E-07	1.56E-06	9.32E-06	1.20E-05	4.65E-08	2.04E-07			0.00E+00	0.00E+00	1.17E-05	1.39E-05	0.0001	0.0001
Benzo(e)pyrene	4.95E-05	5.91E-05	0.00E+00	0.00E+00							1.09E-05	1.30E-05	1.20E-05	1.43E-05	0.0001	0.0001
Benzo(g,h,i)perylene	1.80E-05	2.15E-05	5.88E-10	2.58E-09	4.67E-06	6.02E-06	2.29E-07	1.00E-06			0.00E+00	0.00E+00	2.92E-06	3.48E-06	0.0000	0.0000
Benzo(k)fluoranthene	1.85E-05	2.20E-05	8.82E-10	3.86E-09	1.83E-06	2.36E-06	7.27E-08	3.18E-07			0.00E+00	0.00E+00	3.38E-06	4.03E-06	0.0000	0.0000
Beryllium	0.00E+00	0.00E+00	6.43E-06	2.82E-05											0.0000	0.0000
Bis(2-ethylhexyl)phthalate			7.86E-06	3.44E-05											0.0000	0.0000
Bromomethane									1.22E-05	1.45E-05	2.69E-04	3.21E-04	1.80E-04	2.15E-04	0.0005	0.0006
1,3-Butadiene	0.00E+00	0.00E+00	0.00E+00	0.00E+00			1.83E-05	8.03E-05							0.0000	0.0001
Cadmium	1.85E-04	2.20E-04	4.29E-05	1.88E-04											0.0002	0.0004
Carbon Disulfide	0.00E+00	0.00E+00	0.00E+00	0.00E+00					3.97E-05	4.74E-05	8.78E-04	1.05E-03	2.43E-04	2.91E-04	0.0012	0.0014
Chloroethane/Ethyl Chloride									9.93E-06	1.18E-05	2.20E-04	2.62E-04	3.93E-06	4.69E-06	0.0002	0.0003
Chloromethane/Methyl chloride									5.71E-05	6.81E-05	1.26E-03	1.51E-03	2.81E-04	3.35E-04	0.0016	0.0019
Chromium	2.48E-03	2.95E-03	6.43E-04	2.82E-03											0.0031	0.0058
Hexavalent Chromium	2.03E-04	2.42E-04	0.00E+00	0.00E+00											0.0002	0.0002
Chrysene	8.10E-05	9.67E-05	1.43E-05	6.26E-05	1.28E-05	1.65E-05	1.66E-07	7.25E-07			2.40E-04	2.87E-04	1.58E-04	1.89E-04	0.0005	0.0007
Cobalt	1.17E-05	1.40E-05	1.86E-05	8.13E-05											0.0000	0.0001
Cumene	0.00E+00	0.00E+00	0.00E+00	0.00E+00									2.06E-03	2.46E-03	0.0021	0.0025
Dibenzo(a,h)anthracene	0.00E+00	0.00E+00	5.88E-10	2.58E-09	2.91E-06	3.75E-06	2.73E-07	1.20E-06			0.00E+00	0.00E+00	5.68E-07	6.78E-07	0.0000	0.0000
Dibutylphthalate			1.21E-07	5.32E-07											0.0000	0.0000
Dichlorobenzene	0.00E+00	0.00E+00	5.88E-07	2.58E-06											0.0000	0.0000
Ethyl Benzene	1.08E-01	1.29E-01	0.00E+00	0.00E+00					9.43E-05	1.13E-04	2.09E-03	2.49E-03	5.24E-03	6.26E-03	0.1154	0.1378
Fluoranthene	2.75E-04	3.28E-04	1.57E-07	6.88E-07	3.39E-05	4.36E-05	3.57E-06	1.56E-05			1.71E-04	2.05E-04	7.67E-05	9.16E-05	0.0006	0.0007
Fluorene	4.95E-03	5.91E-03	1.14E-07	5.01E-07	1.08E-04	1.39E-04	1.37E-05	6.00E-05			1.15E-03	1.38E-03	1.18E-03	1.41E-03	0.0074	0.0089
Formaldehyde	1.40E+00	1.67E+00	2.18E-04	9.54E-04	6.63E-04	8.54E-04	5.53E-04	2.42E-03	1.71E-03	2.04E-03	3.79E-02	4.52E-02	1.65E-03	1.97E-03	1.4377	1.7187
Hexane	4.14E-01	4.94E-01	8.82E-04	3.86E-03					2.48E-04	2.96E-04	5.49E-03	6.55E-03	2.81E-03	3.35E-03	0.4234	0.5083
HCl	9.45E-02	1.13E-01	2.36E-02	1.03E-01											0.1181	0.2161
Indeno(1,2,3-cd)pyrene	3.15E-06	3.76E-06	8.82E-10	3.86E-09	3.48E-06	4.48E-06	1.76E-07	7.70E-07			0.00E+00	0.00E+00	7.21E-07	8.61E-07	0.0000	0.0000
Lead	6.75E-03	8.06E-03	1.79E-03	7.82E-03											0.0085	0.0159
Manganese	3.47E-03	4.14E-03	1.79E-04	7.82E-04											0.0036	0.0049
Mercury	1.17E-03	1.40E-03	1.50E-06	6.57E-06											0.0012	0.0014
Methyl Chloroform	2.16E-02	2.58E-02	0.00E+00	0.00E+00									0.00E+00	0.00E+00	0.0216	0.0258
Methyl Ethyl Ketone	9.00E-03	1.07E-02	0.00E+00	0.00E+00					9.68E-05	1.16E-04	2.14E-03	2.56E-03	9.17E-04	1.10E-03	0.0122	0.0145
Methylene Chloride/Dichloromethane									6.70E-07	8.00E-07	1.48E-05	1.77E-05			0.0000	0.0000
2-Methylnaphthalene	7.65E-02	9.13E-02	8.82E-10	3.86E-09							6.02E-03	7.19E-03	3.65E-03	4.36E-03	0.0862	0.1029
3-Methylchloranthrene	0.00E+00	0.00E+00	1.18E-08	5.15E-08											0.0000	0.0000
Naphthalene	2.93E-01	3.49E-01	6.07E-05	2.66E-04	1.09E-03	1.41E-03	3.98E-05	1.74E-04			2.08E-03	2.48E-03	1.92E-03	2.29E-03	0.2977	0.3558
Nickel	2.84E-02	3.38E-02	5.71E-04	2.50E-03											0.0289	0.0363
Pentane	0.00E+00	0.00E+00	1.27E-03	5.58E-03											0.0013	0.0056
Perylene	3.96E-06	4.73E-06	0.00E+00	0.00E+00							3.43E-05	4.09E-05	3.38E-05	4.03E-05	0.0001	0.0001
Phenanthrene	1.04E-02	1.24E-02	1.75E-05	7.67E-05	3.43E-04	4.42E-04	1.38E-05	6.04E-05			2.06E-03	2.46E-03	1.24E-03	1.48E-03	0.0140	0.0169
Phenol			1.00E-07	4.38E-07							0.00E+00	0.00E+00	1.81E-03	2.16E-03	0.0018	0.0022
Phosphorus	1.26E-02	1.50E-02	0.00E+00	0.00E+00											0.0126	0.0150
POM	3.98E-01	4.75E-01	1.25E-04	5.48E-04	1.78E-03	2.29E-03	7.88E-05	3.45E-04			1.30E-02	1.56E-02	9.11E-03	1.09E-02	0.4223	0.5049
Propionaldehyde	5.85E-02	6.98E-02	0.00E+00	0.00E+00											0.0585	0.0698
Pyrene	1.35E-03	1.61E-03	1.14E-07	5.01E-07	3.12E-05	4.02E-05	2.24E-06	9.82E-06			5.03E-04	6.00E-04	2.30E-04	2.75E-04	0.0021	0.0025
Quinone	7.20E-02	8.60E-02													0.0720	0.0860
Selenium	1.58E-04	1.88E-04	7.50E-06	3.29E-05											0.0002	0.0002
Styrene	0.00E+00	0.00E+00	0.00E+00	0.00E+00					1.34E-05	1.60E-05	2.96E-04	3.54E-04	1.37E-04	1.63E-04	0.0004	0.0005
2,3,7,8-TCDD	9.45E-11	1.13E-10	0.00E+00	0.00E+00											0.0000	0.0000
Tetrachloroethene/ Tetrachloroethylene													1.44E-04	1.72E-04	0.0001	0.0002
Toluene	1.31E+00	1.56E+00	1.67E-06	7.30E-06	2.36E-03	3.04E-03	1.92E-04	8.40E-04	1.54E-04	1.84E-04	3.40E-03	4.06E-03	3.93E-03	4.69E-03	1.3150	1.5707
Total PCDD/PCDF	5.40E-08	6.45E-08	8.21E-10	3.60E-09											0.0000	0.0000
Trichloroethene/ Trichloroethylene			0.00E+00	0.00E+00									0.00E+00	0.00E+00	0.0000	0.0000
Xylene	9.00E-02	1.07E-01	0.00E+00	0.00E+00	1.62E-03	2.09E-03	1.34E-04	5.85E-04	6.38E-04	7.61E-04	1.41E-02	1.68E-02	9.17E-03	1.10E-02	0.1157	0.1387
TOTALS:															4.96	6.03

1) POM & Total PCDD/PCDF: Maximum PTE estimates for POM based on polycyclic organic matter mixture as defined by 1900 CAA Amendments. Refer to individual unit emission estimates for compounds included in the mixture. To avoid double counting, the total, maximum PTE estimates do not include POM (i.e., individual compounds are summed separately) or 2, 3, 7, 8-TCDD (included in Total PCDD/PCDF).

2) Note that Silo Filling emissions are actually routed through the Drum Dryer/Baghouse. Presented seperately here for HAP threshold assessment purposes only.

APPENDIX 4

Emissions Inventory at 500 T/hr Production

Emission Unit:	Drum Dryer
Manufacturer /Model:	Gencor, Model 400 Portable Insulated Ultradrum with Ultra II-
Production capacity (T/hr):	500
Burner capacity (MMBTU/hr):	135
Fuel Type(s):	RFO, #2 Diesel, natural gas, or propane
Daily Hours of Operation (hr/d)	12.5
Max Daily Production (T/d)	6250
Annual Hours of Operation (hr/yr):	2387.5
Max Annual Production (T/yr):	1193750

Control Equipment:	Gencor Baghouse, Model CFP-182	

RFO and Diesel (MMBTU/1000 gallons):		140	(AP-42, App A)
Nat. gas (BTU/scf):		1020	(AP-42, Table 1.4-1, footnote (a))
Propane (MMBTU/1000 gallons):		91.5	(AP-42, Table 1.5-1, footnote (a))
Propane (BTU/scf):		2504	(http://www.engineeringtoolbox.com/fuel-gases-combustion-values-d_510.html)

Potential To Emit - Criteria Pollutants

Criteria Pollutant	RFO			#2 Diesel			Nat. Gas			Propane			Max lb/hr	Max T/yr	Max 24hr Ave lb/hr	Max Annual Ave lb/hr
	EF	lb/hr	T/yr	EF	lb/hr	T/yr	EF	lb/hr	T/yr	EF	lb/hr	T/yr				
CO	0.13	65.00	77.59	0.13	65.00	77.59	0.13	65.000	77.59	0.13	65.000	77.59	65.00	77.59	33.85	17.72
CO2e		16703.72	19940.07		16703.72	19940.07		16716.26	19955.04		16911.89	20338.68	16911.89	20338.68	8808.28	4609.26
NOx	0.055	27.50	32.83	0.055	27.50	32.83	0.026	13.000	15.52	0.039	19.500	23.28	27.50	32.83	14.32	7.50
SO2	0.058	29.00	34.62	0.011	5.50	6.57	0.0034	1.700	2.03	0.0034	1.700	2.03	29.00	34.62	15.10	7.90
PM	0.033	16.50	19.70	0.033	16.50	19.70	0.033	16.500	19.70	0.033	16.500	19.70	16.50	19.70	8.59	4.50
PM10	0.023	11.50	13.73	0.023	11.50	13.73	0.023	11.500	13.73	0.023	11.500	13.73	11.50	13.73	5.99	3.13
PM2.5		5.49	6.56		5.49	6.56		5.49	6.56		5.49	6.56	5.49	6.56	2.86	1.50
VOC	0.032	16.00	19.10	0.032	16.00	19.10	0.032	16.000	19.10	0.032	16.000	19.10	16.00	19.10	8.33	4.36
Lead	0.000015	0.01	0.01	0.000015	0.01	0.01	6.2E-07	0.00	0.00	6.2E-07	0.00	0.00	0.01	0.01	0.00	0.00

Emission Factor Information:

1) Carbon Monoxide: Emission factors from AP-42 (3/04), Table 11.1-7. For propane, the EF for natural gas combustion was applied. EFs are expressed in pounds of CO per ton of HMA produced.

2) Carbon Dioxide Equivalent: Refer to Greenhouse Gases table for calculation methodology.

3) Nitrogen Oxides: Emission factors from AP-42 (3/04), Table 11.1-7. For propane, the NOx EF for natural gas has been multiplied by a factor of 1.5, per footnote (a) from Table 1.5-1, Emission Factors for LPG Combustion (i.e., "The NOx emission factors have been multiplied by a factor of 1.5, which is the approximate ratio of propane/butane NOx emissions to natural gas Nox emissions."). EFs expressed in pounds of NOx per ton of HMA produced.

4) Sulfur Dioxide: Emission factors from AP-42 (3/04), Table 11.1-7. For propane, the EF for natural gas combustion was applied. EFs are expressed in pounds of SOx per ton of HMA produced.

5) Particulate Matter: Emission factors based on AP-42 (3/04), Table 11.1-3, for fabric filter and Total PM. EFs are expressed in pounds of PM-10 per ton of HMA produced.

6) PM-10: Emission factors based on AP-42 (3/04), Table 11.1-3, for fabric filter and Total PM-10. EFs are expressed in pounds of PM-10 per ton of HMA produced.

7) PM-2.5: Emission factors based on AP-42 (3/04), Table 11.1-3, for fabric filter and Total PM. To derive PM2.5, a speciation factor of 0.333 was applied (California Air Resources Board, 7/2009). EFs are expressed in pounds of PM-2.5 per ton of HMA produced.

8) VOC: Emission factors from AP-42 (3/04), Table 11.1-8. For propane, the EF for natural gas combustion was applied. EFs are expressed in pounds of VOC per ton of HMA produced.

9) Lead: Emission factors from AP-42 (3/04), Table 11.1-12, for fabric filter. EFs are expressed in pounds of Pb per ton of HMA produced.

Potential To Emit - Non-Carcinogenic TAPs

Non-Carcinogen TAP	RFO			#2 Diesel			Nat. Gas			Propane			Max lb/hr	Max T/yr	Max 24hr Ave lb/hr	Max Annual Ave lb/hr
	EF	lb/hr	T/yr	EF	lb/hr	T/yr	EF	lb/hr	T/yr	EF	lb/hr	T/yr				
Acetone	8.3E-04	4.2E-01	5.0E-01		0.0E+00	0.0E+00		0.0E+00	0.0E+00		0.0E+00	0.0E+00	4.15E-01	4.95E-01	2.16E-01	1.13E-01
Acrolein	2.6E-05	1.3E-02	1.6E-02		0.0E+00	0.0E+00		0.0E+00	0.0E+00		0.0E+00	0.0E+00	1.30E-02	1.55E-02	6.77E-03	3.54E-03
Antimony	1.8E-07	9.0E-05	1.1E-04	1.8E-07	9.0E-05	1.1E-04	1.8E-07	9.0E-05	1.1E-04	1.8E-07	9.0E-05	1.1E-04	9.00E-05	1.07E-04	4.69E-05	2.45E-05
Barium	5.8E-67	2.9E-64	3.5E-64	5.8E-06	2.9E-03	3.5E-03	5.8E-06	2.9E-03	3.5E-03	5.8E-06	2.9E-03	3.5E-03	2.90E-03	3.46E-03	1.51E-03	7.90E-04
Chromium	5.5E-06	2.8E-03	3.3E-03	5.5E-06	2.8E-03	3.3E-03	5.5E-06	2.8E-03	3.3E-03	5.5E-06	2.8E-03	3.3E-03	2.75E-03	3.28E-03	1.43E-03	7.50E-04
Cobalt	2.6E-08	1.3E-05	1.6E-05	2.6E-08	1.3E-05	1.6E-05	2.6E-08	1.3E-05	1.6E-05	2.6E-08	1.3E-05	1.6E-05	1.3E-05	1.6E-05	6.8E-06	3.5E-06
Copper	3.1E-06	1.6E-03	1.9E-03	3.1E-06	1.6E-03	1.9E-03	3.1E-06	1.6E-03	1.9E-03	3.1E-06	1.6E-03	1.9E-03	1.6E-03	1.9E-03	8.1E-04	4.2E-04
Crotonaldehyde	8.6E-05	4.3E-02	5.1E-02		0.0E+00	0.0E+00		0.0E+00	0.0E+00		0.0E+00	0.0E+00	4.30E-02	5.13E-02	2.24E-02	1.17E-02
Ethyl Benzene	2.4E-04	1.2E-01	1.4E-01	2.4E-04	1.2E-01	1.4E-01	2.4E-04	1.2E-01	1.4E-01	2.4E-04	1.2E-01	1.4E-01	1.20E-01	1.43E-01	6.25E-02	3.27E-02
Heptane	9.4E-03	4.7E+00	5.6E+00	9.4E-03	4.7E+00	5.6E+00	9.4E-03	4.7E+00	5.6E+00	9.4E-03	4.7E+00	5.6E+00	4.70E+00	5.61E+00	2.45E+00	1.28E+00
Hexane	9.2E-04	4.6E-01	5.5E-01	9.2E-04	4.6E-01	5.5E-01	9.2E-04	4.6E-01	5.5E-01	9.2E-04	4.6E-01	5.5E-01	4.60E-01	5.49E-01	2.40E-01	1.25E-01
Hydrochloric Acid	2.1E-04	1.1E-01	1.3E-01		0.0E+00	0.0E+00		0.0E+00	0.0E+00		0.0E+00	0.0E+00	1.1E-01	1.3E-01	5.5E-02	2.9E-02
Manganese	7.7E-06	3.9E-03	4.6E-03	7.7E-06	3.9E-03	4.6E-03	7.7E-06	3.9E-03	4.6E-03	7.7E-06	3.9E-03	4.6E-03	3.9E-03	4.6E-03	2.0E-03	1.0E-03
Mercury	2.6E-06	1.3E-03	1.6E-03	2.6E-06	1.3E-03	1.6E-03	2.4E-07	1.2E-04	1.4E-04	2.4E-07	1.2E-04	1.4E-04	1.3E-03	1.6E-03	6.8E-04	3.5E-04
Methyl Chloroform	4.8E-05	2.4E-02	2.9E-02	4.8E-05	2.4E-02	2.9E-02	4.8E-05	2.4E-02	2.9E-02	4.8E-05	2.4E-02	2.9E-02	2.40E-02	2.87E-02	1.25E-02	6.54E-03
Methyl Ethyl Ketone	2.0E-05	1.0E-02	1.2E-02		0.0E+00	0.0E+00		0.0E+00	0.0E+00		0.0E+00	0.0E+00	1.00E-02	1.19E-02	5.21E-03	2.73E-03
Naphthalene	6.5E-04	3.3E-01	3.9E-01	6.5E-04	3.3E-01	3.9E-01	9.0E-05	4.5E-02	5.4E-02	9.0E-05	4.5E-02	5.4E-02	3.25E-01	3.88E-01	1.69E-01	8.86E-02
n-Pentane	2.1E-04	1.1E-01	1.3E-01	2.1E-04	1.1E-01	1.3E-01	2.1E-04	1.1E-01	1.3E-01	2.1E-04	1.1E-01	1.3E-01	1.05E-01	1.25E-01	5.47E-02	2.86E-02
Phosphorus	2.8E-05	1.4E-02	1.7E-02	2.8E-05	1.4E-02	1.7E-02	2.8E-05	1.4E-02	1.7E-02	2.8E-05	1.4E-02	1.7E-02	1.40E-02	1.67E-02	7.29E-03	3.82E-03
Propionaldehyde	1.3E-04	6.5E-02	7.8E-02		0.0E+00	0.0E+00		0.0E+00	0.0E+00		0.0E+00	0.0E+00	6.50E-02	7.76E-02	3.39E-02	1.77E-02
Quinone	1.6E-04	8.0E-02	9.6E-02		0.0E+00	0.0E+00		0.0E+00	0.0E+00		0.0E+00	0.0E+00	8.00E-02	9.55E-02	4.17E-02	2.18E-02
Selenium	3.5E-07	1.8E-04	2.1E-04	3.5E-07	1.8E-04	2.1E-04	3.5E-07	1.8E-04	2.1E-04	3.5E-07	1.8E-04	2.1E-04	1.75E-04	2.09E-04	9.11E-05	4.77E-05
Silver	4.8E-07	2.4E-04	2.9E-04	4.8E-07	2.4E-04	2.9E-04	4.8E-07	2.4E-04	2.9E-04	4.8E-07	2.4E-04	2.9E-04	2.40E-04	2.87E-04	1.25E-04	6.54E-05
Thallium	4.1E-09	2.1E-06	2.4E-06	4.1E-09	2.1E-06	2.4E-06	4.1E-09	2.1E-06	2.4E-06	4.1E-09	2.1E-06	2.4E-06	2.05E-06	2.45E-06	1.07E-06	5.59E-07
Toluene	2.9E-03	1.5E+00	1.7E+00	2.9E-03	1.5E+00	1.7E+00	1.5E-04	7.5E-02	9.0E-02	1.5E-04	7.5E-02	9.0E-02	1.45E+00	1.73E+00	7.55E-01	3.95E-01
Valeraldehyde	6.7E-05	3.4E-02	4.0E-02		0.0E+00	0.0E+00		0.0E+00	0.0E+00		0.0E+00	0.0E+00	3.35E-02	4.00E-02	1.74E-02	9.13E-03
Xylene	2.0E-04	1.0E-01	1.2E-01	2.0E-04	1.0E-01	1.2E-01	2.0E-04	1.0E-01	1.2E-01	2.0E-04	1.0E-01	1.2E-01	1.00E-01	1.19E-01	5.21E-02	2.73E-02
Zinc	6.1E-05	3.1E-02	3.6E-02	6.1E-05	3.1E-02	3.6E-02	6.1E-05	3.1E-02	3.6E-02	6.1E-05	3.1E-02	3.6E-02	3.05E-02	3.64E-02	1.59E-02	8.31E-03
TOTALS:			9.673			8.764			6.787			6.787	8.106	9.676		

Potential To Emit - Carcinogenic TAPs

Carcinogen TAP	RFO			#2 Diesel			Nat. Gas			Propane			Max lb/hr	Max T/yr	Max 24hr Ave lb/hr	Max Annual Ave lb/hr
	EF	lb/hr	T/yr	EF	lb/hr	T/yr	EF	lb/hr	T/yr	EF	lb/hr	T/yr				
Acenaphthene	1.4E-06	7.0E-04	8.4E-04	1.40E-06	7.0E-04	8.4E-04	1.40E-06	7.0E-04	8.4E-04	1.40E-06	7.0E-04	8.4E-04	7.00E-04	8.38E-04	3.65E-04	1.91E-04
Acenaphthylene	2.2E-05	1.1E-02	1.3E-02	2.20E-05	1.1E-02	1.3E-02	8.60E-06	4.3E-03	5.1E-03	8.60E-06	4.3E-03	5.1E-03	1.10E-02	1.31E-02	5.73E-03	3.00E-03
Acetaldehyde	1.3E-03	6.5E-01	7.8E-01		0.0E+00	0.0E+00		0.0E+00	0.0E+00		0.0E+00	0.0E+00	6.50E-01	7.76E-01	3.39E-01	1.77E-01
Anthracene	3.1E-06	1.6E-03	1.9E-03	3.1E-06	1.6E-03	1.9E-03	2.2E-07	1.1E-04	1.3E-04	2.2E-07	1.1E-04	1.3E-04	1.55E-03	1.85E-03	8.07E-04	4.22E-04
Arsenic	5.6E-07	2.8E-04	3.3E-04	5.6E-07	2.8E-04	3.3E-04	5.6E-07	2.8E-04	3.3E-04	5.6E-07	2.8E-04	3.3E-04	2.80E-04	3.34E-04	1.46E-04	7.63E-05
Benzene	3.9E-04	2.0E-01	2.3E-01	3.9E-04	2.0E-01	2.3E-01	3.9E-04	2.0E-01	2.3E-01	3.9E-04	2.0E-01	2.3E-01	1.95E-01	2.33E-01	1.02E-01	5.31E-02
Benzo(a)pyrene	9.80E-09	4.9E-06	5.8E-06	9.80E-09	4.9E-06	5.8E-06	9.80E-09	4.9E-06	5.8E-06	9.80E-09	4.9E-06	5.8E-06	4.90E-06	5.85E-06	2.55E-06	1.34E-06
Benzo(g,h,i)perylene	4.0E-08	2.0E-05	2.4E-05	4.0E-08	2.0E-05	2.4E-05	4.0E-08	2.0E-05	2.4E-05	4.0E-08	2.0E-05	2.4E-05	2.00E-05	2.39E-05	1.04E-05	5.45E-06
Benzo(e)pyrene	1.1E-07	5.5E-05	6.6E-05	1.1E-07	5.5E-05	6.6E-05	1.1E-07	5.5E-05	6.6E-05	1.1E-07	5.5E-05	6.6E-05	5.50E-05	6.57E-05	2.86E-05	1.50E-05
Beryllium	0.0E+00	0.0E+00	0.0E+00	0.0E+00	0.0E+00	0.0E+00	0.0E+00	0.0E+00	0.0E+00	0.0E+00	0.0E+00	0.0E+00	0.00E+00	0.00E+00	0.00E+00	0.00E+00
Cadmium	4.1E-07	2.1E-04	2.4E-04	4.1E-07	2.1E-04	2.4E-04	4.1E-07	2.1E-04	2.4E-04	4.1E-07	2.1E-04	2.4E-04	2.05E-04	2.45E-04	1.07E-04	5.59E-05
Hexavalent Chromium	4.5E-07	2.3E-04	2.7E-04	4.5E-07	2.3E-04	2.7E-04	4.5E-07	2.3E-04	2.7E-04	4.5E-07	2.3E-04	2.7E-04	2.25E-04	2.69E-04	1.17E-04	6.13E-05
Dioxin/Furans (see below)													6.00E-08	7.16E-08		4.04E-10
Fluoranthene	6.1E-07	3.1E-04	3.6E-04	6.1E-07	3.1E-04	3.6E-04	6.1E-07	3.1E-04	3.6E-04	6.1E-07	3.1E-04	3.6E-04	3.05E-04	3.64E-04	1.59E-04	8.31E-05
Fluorene	1.1E-05	5.5E-03	6.6E-03	1.1E-05	5.5E-03	6.6E-03	3.8E-06	1.9E-03	2.3E-03	3.8E-06	1.9E-03	2.3E-03	5.50E-03	6.57E-03	2.86E-03	1.50E-03
Formaldehyde	3.1E-03	1.6E+00	1.9E+00	3.1E-03	1.6E+00	1.9E+00	3.1E-03	1.6E+00	1.9E+00	3.1E-03	1.6E+00	1.9E+00	1.55E+00	1.85E+00	8.07E-01	4.22E-01
2-Methylnaphthalene	1.7E-04	8.5E-02	1.0E-01	1.70E-04	8.5E-02	1.0E-01	7.40E-05	3.7E-02	4.4E-02	7.40E-05	3.7E-02	4.4E-02	8.50E-02	1.01E-01	4.43E-02	2.32E-02
Naphthalene	6.5E-04	3.3E-01	3.9E-01	6.5E-04	3.3E-01	3.9E-01	9.0E-05	4.5E-02	5.4E-02	9.0E-05	4.5E-02	5.4E-02	3.25E-01	3.88E-01	1.69E-01	8.86E-02
Nickel	6.3E-05	3.2E-02	3.8E-02	6.3E-05	3.2E-02	3.8E-02	6.3E-05	3.2E-02	3.8E-02	6.3E-05	3.2E-02	3.8E-02	3.15E-02	3.76E-02	1.64E-02	8.59E-03
Perylene	8.8E-09	4.4E-06	5.3E-06	8.8E-09	4.4E-06	5.3E-06	8.8E-09	4.4E-06	5.3E-06	8.8E-09	4.4E-06	5.3E-06	4.40E-06	5.25E-06	2.29E-06	1.20E-06
Phenanthrene	2.3E-05	1.2E-02	1.4E-02	2.3E-05	1.2E-02	1.4E-02	7.6E-06	3.8E-03	4.5E-03	7.6E-06	3.8E-03	4.5E-03	1.15E-02	1.37E-02	5.99E-03	3.13E-03
POM (see below)	5.5E-07	2.7E-04	3.3E-04	5.5E-07	2.7E-04	3.3E-04	5.5E-07	2.7E-04	3.3E-04	5.5E-07	2.7E-04	3.3E-04	2.74E-04	3.27E-04	1.43E-04	7.47E-05
Pyrene	3.0E-06	1.5E-03	1.8E-03	3.0E-06	1.5E-03	1.8E-03	5.4E-07	2.7E-04	3.2E-04	5.4E-07	2.7E-04	3.2E-04	1.50E-03	1.79E-03	7.81E-04	4.09E-04
2,3,7,8-TCDD	2.1E-13	1.1E-10	1.3E-10	2.1E-13	1.1E-10	1.3E-10		0.0E+00	0.0E+00		0.0E+00	0.0E+00	1.05E-10	1.25E-10	5.47E-11	2.86E-11
TOTALS:			3.43			2.65			2.23			2.23	2.87	3.43		

1) Metals: Emission factors from AP-42 (3/04), Table 11.1-12, for fabric filter. EF expressed in pounds of pollutant per ton of HMA produced.

2) Organic Pollutants: Emission factors from AP-42 (3/04), Table 11.1-10., for fabric filter. For propane, the EFs for natural gas have been applied. EF for HCl from RFO combustion from AP-42 (3/04), Table 11.1-8. EFs expressed in pounds of pollutant per ton of HMA produced.

3) Dioxin/Furans: Max Annual Ave value represents emissions from all dioxin/furan mixtures, expressed as equivalent emissions of 2,3,7,8-TCDD, per IDAPA 58.01.01.586. Refer to Dioxin/Furan Mixture table for calculation methodology.

4) POM: Emission factors for POM based on polyaromatic hydrocarbon mixture identified in IDAPA 58.01.01.586. Refer to Polycyclic Organic Matter Mixture table for calculation methodology.

Polycyclic Organic Matter Mixture

Polycyclic Organic Matter (POM)	RFO			#2 Diesel			Nat. Gas			Propane		
	EF	lb/hr	T/yr	EF	lb/hr	T/yr	EF	lb/hr	T/yr	EF	lb/hr	T/yr
Benzo(a)anthracene	2.10E-07	1.1E-04	1.3E-04	2.10E-07	1.1E-04	1.3E-04	2.10E-07	1.1E-04	1.3E-04	2.10E-07	1.1E-04	1.3E-04
Benzo(b)fluoranthene	1.00E-07	5.0E-05	6.0E-05	1.00E-07	5.0E-05	6.0E-05	1.00E-07	5.0E-05	6.0E-05	1.00E-07	5.0E-05	6.0E-05
Benzo(k)fluoranthene	4.10E-08	2.1E-05	2.4E-05	4.10E-08	2.1E-05	2.4E-05	4.10E-08	2.1E-05	2.4E-05	4.10E-08	2.1E-05	2.4E-05
Benzo(a)pyrene	9.80E-09	4.9E-06	5.8E-06	9.80E-09	4.9E-06	5.8E-06	9.80E-09	4.9E-06	5.8E-06	9.80E-09	4.9E-06	5.8E-06
Chrysene	1.80E-07	9.0E-05	1.1E-04	1.80E-07	9.0E-05	1.1E-04	1.80E-07	9.0E-05	1.1E-04	1.80E-07	9.0E-05	1.1E-04
Dibenzo(a,h)anthracene		0.0E+00	0.0E+00		0.0E+00	0.0E+00		0.0E+00	0.0E+00		0.0E+00	0.0E+00
Indeno(1,2,3-cd)pyrene	7.00E-09	3.5E-06	4.2E-06	7.00E-09	3.5E-06	4.2E-06	7.00E-09	3.5E-06	4.2E-06	7.00E-09	3.5E-06	4.2E-06
TOTALS:	5.48E-07		0.000	5.48E-07		0.000	5.48E-07		0.000	5.48E-07		0.000

Dioxin/Furan Mixture

Dioxin/Furan	RFO			#2 Diesel			Max lb/hr	Max T/yr	TEF	Adjusted Max Annual Ave lb/hr
	EF	lb/hr	T/yr	EF	lb/hr	T/yr				
2,3,7,8-TCDD	2.1E-13	1.1E-10	1.3E-10	2.1E-13	1.1E-10	1.3E-10	1.05E-10	1.25E-10	1.0	2.86E-11
Total TCDD	9.3E-13	4.7E-10	5.6E-10	9.3E-13	4.7E-10	5.6E-10	4.65E-10	5.55E-10		
1,2,3,7,8-PeCDD	3.1E-13	1.6E-10	1.9E-10	3.1E-13	1.6E-10	1.9E-10	1.55E-10	1.85E-10	1.0	4.22E-11
Total PeCDD	2.2E-11	1.1E-08	1.3E-08	2.2E-11	1.1E-08	1.3E-08	1.10E-08	1.31E-08		
1,2,3,4,7,8-HxCDD	4.2E-13	2.1E-10	2.5E-10	4.2E-13	2.1E-10	2.5E-10	2.10E-10	2.51E-10	0.10	5.72E-12
1,2,3,6,7,8-HxCDD	1.3E-12	6.5E-10	7.8E-10	1.3E-12	6.5E-10	7.8E-10	6.50E-10	7.76E-10	0.10	1.77E-11
1,2,3,7,8,9-HxCDD	9.8E-13	4.9E-10	5.8E-10	9.8E-13	4.9E-10	5.8E-10	4.90E-10	5.85E-10	0.10	1.34E-11
Total HxCDD	1.2E-11	6.0E-09	7.2E-09	1.2E-11	6.0E-09	7.2E-09	6.00E-09	7.16E-09		
1,2,3,4,6,7,8-Hp-CDD	4.8E-12	2.4E-09	2.9E-09	4.8E-12	2.4E-09	2.9E-09	2.40E-09	2.87E-09	0.01	6.54E-12
Total HpCDD	1.9E-11	9.5E-09	1.1E-08	1.9E-11	9.5E-09	1.1E-08	9.50E-09	1.13E-08		
Octa CDD	2.5E-11	1.3E-08	1.5E-08	2.5E-11	1.3E-08	1.5E-08	1.25E-08	1.49E-08	0.0003	1.02E-12
Total PCDD	7.9E-11	4.0E-08	4.7E-08	7.9E-11	4.0E-08	4.7E-08	3.95E-08	4.72E-08		
2,3,7,8-TCDF	9.7E-13	4.9E-10	5.8E-10	9.7E-13	4.9E-10	5.8E-10	4.85E-10	5.79E-10	0.1	1.32E-11
Total TCDF	3.7E-12	1.9E-09	2.2E-09	3.7E-12	1.9E-09	2.2E-09	1.85E-09	2.21E-09		
1,2,3,7,8-PeCDF	4.3E-12	2.2E-09	2.6E-09	4.3E-12	2.2E-09	2.6E-09	2.15E-09	2.57E-09	0.03	1.76E-11
2,3,4,7,8-PeCDF	8.4E-13	4.2E-10	5.0E-10	8.4E-13	4.2E-10	5.0E-10	4.20E-10	5.01E-10	0.30	3.43E-11
Total PeCDF	8.4E-11	4.2E-08	5.0E-08	8.4E-11	4.2E-08	5.0E-08	4.20E-08	5.01E-08		
1,2,3,4,7,8-HxCDF	4.0E-12	2.0E-09	2.4E-09	4.0E-12	2.0E-09	2.4E-09	2.00E-09	2.39E-09	0.10	5.45E-11
1,2,3,6,7,8-HxCDF	1.2E-12	6.0E-10	7.2E-10	1.2E-12	6.0E-10	7.2E-10	6.00E-10	7.16E-10	0.10	1.64E-11
2,3,4,6,7,8-HxCDF	1.9E-12	9.5E-10	1.1E-09	1.9E-12	9.5E-10	1.1E-09	9.50E-10	1.13E-09	0.10	2.59E-11
1,2,3,7,8,9-HxCDF	8.4E-12	4.2E-09	5.0E-09	8.4E-12	4.2E-09	5.0E-09	4.20E-09	5.01E-09	0.10	1.14E-10
Total HxCDF	1.3E-11	6.5E-09	7.8E-09	1.3E-11	6.5E-09	7.8E-09	6.50E-09	7.76E-09		
1,2,3,4,6,7,8-HpCDF	6.5E-12	3.3E-09	3.9E-09	6.5E-12	3.3E-09	3.9E-09	3.25E-09	3.88E-09	0.01	8.86E-12
1,2,3,4,7,8,9-HpCDF	2.7E-12	1.4E-09	1.6E-09	2.7E-12	1.4E-09	1.6E-09	1.35E-09	1.61E-09	0.01	3.68E-12
Total HpCDF	1.0E-11	5.0E-09	6.0E-09	1.0E-11	5.0E-09	6.0E-09	5.00E-09	5.97E-09		
Octa CDF	4.8E-12	2.4E-09	2.9E-09	4.8E-12	2.4E-09	2.9E-09	2.40E-09	2.87E-09	0.0003	1.96E-13
Total PCDF	4.0E-11	2.0E-08	2.4E-08	4.0E-11	2.0E-08	2.4E-08	2.00E-08	2.39E-08		
Total PCDD/PCDF	1.2E-10	6.0E-08	7.2E-08	1.2E-10	6.0E-08	7.2E-08	6.00E-08	7.16E-08		
							TOTAL ADJUSTED:			4.04E-10

1) Organic Pollutants: Emission factors from AP-42 (3/04), Table 11.1-10., for fabric filter. For propane, the EFs for natural gas have been applied. EF for dioxin/furans from nat. gas or propane not available. EFs expressed in pounds of pollutant per ton of HMA produced.

2) Toxic Equivalency Factors: 2005, Van den Berg, et al, The 2005 World Health Organization Reevaluation of Human and Mammalian Toxic Equivalency Factors for Dioxins and Dioxin-Like Compounds, Toxicological Sciences 93(2), 223-241 (2006). Accessible at http://toxsci.oxfordjournals.org/cgi/reprint/93/2/223. Use of the 2005 WHO toxic equivalency factors (TEFs) is consistent with current EPA recommendations for TRI reporting (72 FR 26544, May 10, 2007). IDAPA 58.01.01.586, TAPs Carcinogenic Increments: Total of adjusted emission rates are expressed as 2,3,7,8 TCDD equivalents.

Greenhouse Gases

GHG	RFO			#2 Diesel			Nat. Gas			Propane			Max lb/hr	Max T/yr
	EF	lb/hr	T/yr	EF	lb/hr	T/yr	EF	lb/hr	T/yr	EF	lb/hr	T/yr		
CO2	33.0	16500.00	19696.88	33.0	16500.00	19696.88	33.0	16500.00	19696.88	33.0	16500.00	19696.88	16500.00	19696.88
Methane	0.012	6.00	7.16	0.012	6.00	7.16	0.012	6.00	7.16	0.012	0.01	7.16	6.00	7.16
N2O	0.260	0.251	0.30	0.260	0.251	0.30	2.2	0.29	0.35	0.9	1.33	1.59	1.33	1.59
CO2e		16703.72	19940.07		16703.72	19940.07		16716.26	19955.04		16911.89	20338.68	17037.64	20338.68

1) Carbon Dioxide: Emission factors from AP-42 (3/04), Table 11.1-7. For propane, the EF for natural gas combustion was applied. EFs are expressed in pounds of CO2 per ton of HMA produced.

2) Methane: Emission factors from AP-42 (3/04), Table 11.1-8. For propane, the EF for natural gas combustion was applied. EFs are expressed in pounds of methane per ton of HMA produced.

3) N2O: For #2 diesel, emission factor from AP-42 (5/10), Table 1.3-8; EF expressed in pounds of N2O per 1000 gallons. For RFO, the EF for #2 diesel was applied. For natural gas, EF from AP-42 (7/98), Table 1.4-2, uncontrolled; EF expressed in pounds of N2O per MMSCF. For propane, EF from AP-42 (7/08), Table 1.5-1; EF expressed in lb N2O per 1000 gallons.

4) CO2e: The sum of CO2, methane, and N2O expressed as carbon dioxide equivalent. A global warming potential of 21 was applied to methane. A GWP of 310 was applied to N2O.

Potential To Emit - HAPs

HAP	RFO			#2 Diesel			Nat. Gas			Propane			Max lb/hr	Max T/yr
	EF	lb/hr	T/yr	EF	lb/hr	T/yr	EF	lb/hr	T/yr	EF	lb/hr	T/yr		
Acenaphthene[3]	1.40E-06	7.00E-04	8.36E-04	1.40E-06	7.00E-04	8.36E-04	1.40E-06	7.00E-04	8.36E-04	1.40E-06	7.00E-04	8.36E-04	7.00E-04	0.001
Acenaphthylene[3]	2.20E-05	1.10E-02	1.31E-02	2.20E-05	1.10E-02	1.31E-02	8.60E-06	4.30E-03	5.13E-03	8.60E-06	4.30E-03	5.13E-03	1.10E-02	0.013
Acetaldehyde	1.30E-03	6.50E-01	7.76E-01		0.00E+00	0.00E+00		0.00E+00	0.00E+00		0.00E+00	0.00E+00	6.50E-01	0.776
Acrolein	2.60E-05	1.30E-02	1.55E-02		0.00E+00	0.00E+00		0.00E+00	0.00E+00		0.00E+00	0.00E+00	1.30E-02	0.016
Antimony	1.80E-07	9.00E-05	1.07E-04	1.80E-07	9.00E-05	1.07E-04	1.80E-07	9.00E-05	1.07E-04	1.80E-07	9.00E-05	1.07E-04	9.00E-05	0.000
Anthracene[3]	3.10E-06	1.55E-03	1.85E-03	3.10E-06	1.55E-03	1.85E-03	2.20E-07	1.10E-04	1.31E-04	2.20E-07	1.10E-04	1.31E-04	1.55E-03	0.002
Arsenic	5.60E-07	2.80E-04	3.34E-04	5.60E-07	2.80E-04	3.34E-04	5.60E-07	2.80E-04	3.34E-04	5.60E-07	2.80E-04	3.34E-04	2.80E-04	0.000
Benzene	3.90E-04	1.95E-01	2.33E-01	3.90E-04	1.95E-01	2.33E-01	3.90E-04	1.95E-01	2.33E-01	3.90E-04	1.95E-01	2.33E-01	1.95E-01	0.233
Benzo(a)anthracene[3]	2.10E-07	1.05E-04	1.25E-04	2.10E-07	1.05E-04	1.25E-04	2.10E-07	1.05E-04	1.25E-04	2.10E-07	1.05E-04	1.25E-04	1.05E-04	0.000
Benzo(a)pyrene[3]	9.80E-09	4.90E-06	5.85E-06	9.80E-09	4.90E-06	5.85E-06	9.80E-09	4.90E-06	5.85E-06	9.80E-09	4.90E-06	5.85E-06	4.90E-06	0.000
Benzo(b)fluoranthene[3]	1.00E-07	5.00E-05	5.97E-05	1.00E-07	5.00E-05	5.97E-05	1.00E-07	5.00E-05	5.97E-05	1.00E-07	5.00E-05	5.97E-05	5.00E-05	0.000
Benzo(e)pyrene[3]	1.10E-07	5.50E-05	6.57E-05	1.10E-07	5.50E-05	6.57E-05	1.10E-07	5.50E-05	6.57E-05	1.10E-07	5.50E-05	6.57E-05	5.50E-05	0.000
Benzo(g,h,i)perylene[3]	4.00E-08	2.00E-05	2.39E-05	4.00E-08	2.00E-05	2.39E-05	4.00E-08	2.00E-05	2.39E-05	4.00E-08	2.00E-05	2.39E-05	2.00E-05	0.000
Benzo(k)fluoranthene[3]	4.10E-08	2.05E-05	2.45E-05	4.10E-08	2.05E-05	2.45E-05	4.10E-08	2.05E-05	2.45E-05	4.10E-08	2.05E-05	2.45E-05	2.05E-05	0.000
Beryllium	0.00E+00	0.00E+00	0.00E+00	0.00E+00	0.00E+00	0.00E+00	0.00E+00	0.00E+00	0.00E+00	0.00E+00	0.00E+00	0.00E+00	0.00E+00	0.000
1,3-Butadiene		0.00E+00	0.00E+00		0.00E+00	0.00E+00		0.00E+00	0.00E+00		0.00E+00	0.00E+00	0.00E+00	0.000
Cadmium	4.10E-07	2.05E-04	2.45E-04	4.10E-07	2.05E-04	2.45E-04	4.10E-07	2.05E-04	2.45E-04	4.10E-07	2.05E-04	2.45E-04	2.05E-04	0.000
Carbon Disulfide		0.00E+00	0.00E+00		0.00E+00	0.00E+00		0.00E+00	0.00E+00		0.00E+00	0.00E+00	0.00E+00	0.000
Chromium	5.50E-06	2.75E-03	3.28E-03	5.50E-06	2.75E-03	3.28E-03	5.50E-06	2.75E-03	3.28E-03	5.50E-06	2.75E-03	3.28E-03	2.75E-03	0.003
Hexavalent Chromium	4.50E-07	2.25E-04	2.69E-04	4.50E-07	2.25E-04	2.69E-04	4.50E-07	2.25E-04	2.69E-04	4.50E-07	2.25E-04	2.69E-04	2.25E-04	0.000
Chrysene[3]	1.80E-07	9.00E-05	1.07E-04	1.80E-07	9.00E-05	1.07E-04	1.80E-07	9.00E-05	1.07E-04	1.80E-07	9.00E-05	1.07E-04	9.00E-05	0.000
Cobalt	2.60E-08	1.30E-05	1.55E-05	2.60E-08	1.30E-05	1.55E-05	2.60E-08	1.30E-05	1.55E-05	2.60E-08	1.30E-05	1.55E-05	1.30E-05	0.000
Cumene		0.00E+00	0.00E+00		0.00E+00	0.00E+00		0.00E+00	0.00E+00		0.00E+00	0.00E+00	0.00E+00	0.000
Dibenzo(a,h)anthracene[3]		0.00E+00	0.00E+00		0.00E+00	0.00E+00		0.00E+00	0.00E+00		0.00E+00	0.00E+00	0.00E+00	0.000
Dichlorobenzene		0.00E+00	0.00E+00		0.00E+00	0.00E+00		0.00E+00	0.00E+00		0.00E+00	0.00E+00	0.00E+00	0.000
Ethyl Benzene	2.40E-04	1.20E-01	1.43E-01	2.40E-04	1.20E-01	1.43E-01	2.40E-04	1.20E-01	1.43E-01	2.40E-04	1.20E-01	1.43E-01	1.20E-01	0.143
Fluoranthene[3]	6.10E-07	3.05E-04	3.64E-04	6.10E-07	3.05E-04	3.64E-04	6.10E-07	3.05E-04	3.64E-04	6.10E-07	3.05E-04	3.64E-04	3.05E-04	0.000
Fluorene[3]	1.10E-05	5.50E-03	6.57E-03	1.10E-05	5.50E-03	6.57E-03	3.80E-06	1.90E-03	2.27E-03	3.80E-06	1.90E-03	2.27E-03	5.50E-03	0.007
Formaldehyde	3.10E-03	1.55E+00	1.85E+00	3.10E-03	1.55E+00	1.85E+00	3.10E-03	1.55E+00	1.85E+00	3.10E-03	1.55E+00	1.85E+00	1.55E+00	1.850
Hexane	9.20E-04	4.60E-01	5.49E-01	9.20E-04	4.60E-01	5.49E-01	9.20E-04	4.60E-01	5.49E-01	9.20E-04	4.60E-01	5.49E-01	4.60E-01	0.549
HCl	2.10E-04	1.05E-01	1.25E-01		0.00E+00	0.00E+00		0.00E+00	0.00E+00		0.00E+00	0.00E+00	1.05E-01	0.125
Indeno(1,2,3-cd)pyrene[3]	7.00E-09	3.50E-06	4.18E-06	7.00E-09	3.50E-06	4.18E-06	7.00E-09	3.50E-06	4.18E-06	7.00E-09	3.50E-06	4.18E-06	3.50E-06	0.000
Lead	1.50E-05	7.50E-03	8.95E-03	1.50E-05	7.50E-03	8.95E-03	6.20E-07	3.10E-04	3.70E-04	6.20E-07	3.10E-04	3.70E-04	7.50E-03	0.009
Manganese	7.70E-06	3.85E-03	4.60E-03	7.70E-06	3.85E-03	4.60E-03	7.70E-06	3.85E-03	4.60E-03	7.70E-06	3.85E-03	4.60E-03	3.85E-03	0.005
Mercury	2.60E-06	1.30E-03	1.55E-03	2.60E-06	1.30E-03	1.55E-03	2.40E-07	1.20E-04	1.43E-04	2.40E-07	1.20E-04	1.43E-04	1.30E-03	0.002
Methyl Chloroform	4.80E-05	2.40E-02	2.87E-02	4.80E-05	2.40E-02	2.87E-02	4.80E-05	2.40E-02	2.87E-02	4.80E-05	2.40E-02	2.87E-02	2.40E-02	0.029
Methyl Ethyl Ketone	2.00E-05	1.00E-02	1.19E-02		0.00E+00	0.00E+00		0.00E+00	0.00E+00		0.00E+00	0.00E+00	1.00E-02	0.012
2-Methylnaphthalene[3]	1.70E-04	8.50E-02	1.01E-01	1.70E-04	8.50E-02	1.01E-01	7.40E-05	3.70E-02	4.42E-02	7.40E-05	3.70E-02	4.42E-02	8.50E-02	0.101
3-Methylchloranthrene[3]		0.00E+00	0.00E+00		0.00E+00	0.00E+00		0.00E+00	0.00E+00		0.00E+00	0.00E+00	0.00E+00	0.000
Naphthalene[3]	6.50E-04	3.25E-01	3.88E-01	6.50E-04	3.25E-01	3.88E-01	9.00E-05	4.50E-02	5.37E-02	9.00E-05	4.50E-02	5.37E-02	3.25E-01	0.388
Nickel	6.30E-05	3.15E-02	3.76E-02	6.30E-05	3.15E-02	3.76E-02	6.30E-05	3.15E-02	3.76E-02	6.30E-05	3.15E-02	3.76E-02	3.15E-02	0.038
Pentane		0.00E+00	0.00E+00		0.00E+00	0.00E+00		0.00E+00	0.00E+00		0.00E+00	0.00E+00	0.00E+00	0.000
Perylene[3]	8.80E-09	4.40E-06	5.25E-06	8.80E-09	4.40E-06	5.25E-06	8.80E-09	4.40E-06	5.25E-06	8.80E-09	4.40E-06	5.25E-06	4.40E-06	0.000
Phenanthrene[3]	2.30E-05	1.15E-02	1.37E-02	2.30E-05	1.15E-02	1.37E-02	7.60E-06	3.80E-03	4.54E-03	7.60E-06	3.80E-03	4.54E-03	1.15E-02	0.014
Phosphorus	2.80E-05	1.40E-02	1.67E-02	2.80E-05	1.40E-02	1.67E-02	2.80E-05	1.40E-02	1.67E-02	2.80E-05	1.40E-02	1.67E-02	1.40E-02	0.017
POM (see below)													4.42E-01	0.528
Propionaldehyde	1.30E-04	6.50E-02	7.76E-02		0.00E+00	0.00E+00		0.00E+00	0.00E+00		0.00E+00	0.00E+00	6.50E-02	0.078
Pyrene[3]	3.00E-06	1.50E-03	1.79E-03	3.00E-06	1.50E-03	1.79E-03	5.40E-07	2.70E-04	3.22E-04	5.40E-07	2.70E-04	3.22E-04	1.50E-03	0.002
Quinone	1.60E-04	8.00E-02	9.55E-02		0.00E+00	0.00E+00		0.00E+00	0.00E+00		0.00E+00	0.00E+00	8.00E-02	0.096
Selenium	3.50E-07	1.75E-04	2.09E-04	3.50E-07	1.75E-04	2.09E-04	3.50E-07	1.75E-04	2.09E-04	3.50E-07	1.75E-04	2.09E-04	1.75E-04	0.000
Styrene		0.00E+00	0.00E+00		0.00E+00	0.00E+00		0.00E+00	0.00E+00		0.00E+00	0.00E+00	0.00E+00	0.000
2,3,7,8-TCDD	2.10E-13	1.05E-10	1.25E-10	2.10E-13	1.05E-10	1.25E-10		0.00E+00	0.00E+00		0.00E+00	0.00E+00	1.05E-10	0.000
Toluene	2.90E-03	1.45E+00	1.73E+00	2.90E-03	1.45E+00	1.73E+00	1.50E-04	7.50E-02	8.95E-02	1.50E-04	7.50E-02	8.95E-02	1.45E+00	1.731
Total PCDD/PCDF[3]	1.2E-10	6.0E-08	7.2E-08	1.2E-10	6.0E-08	7.2E-08							6.00E-08	0.000
Xylene	2.00E-04	1.00E-01	1.19E-01	2.00E-04	1.00E-01	1.19E-01	2.00E-04	1.00E-01	1.19E-01	2.00E-04	1.00E-01	1.19E-01	1.00E-01	0.119
TOTALS:			6.36			5.26			3.19			3.19	5.33	6.36

1) Metals: Emission factors from AP-42 (3/04), Table 11.1-12, for fabric filter. EF expressed in pounds of pollutant per ton of HMA produced.

2) Organic Pollutants: Emission factors from AP-42 (3/04), Table 11.1-10., for fabric filter. For propane, the EFs for natural gas have been applied. EF for HCl from RFO combustion from AP-42 (3/04), Table 11.1-8. EFs expressed in pounds of pollutant per ton of HMA produced.

3) POM: Maximum PTE estimates for POM based on polycyclic organic matter mixture as defined by 1900 CAA Amendments. Compounds included in the mixture are denoted in the table. To avoid double counting, the total, maximum PTE estimates do not include POM (i.e., individual compounds are summed separately) or 2, 3, 7, 8-TCDD (included in Total PCDD/PCDF).

Emission Unit:	Asphalt Tank Heater
Manufacturer/Model:	Gencor, Model HYCGO-100
Burner capacity (MMBTU/hr):	0.5
Fuel Type(s):	RFO, #2 Diesel, natural gas, or propane
Daily Hours of Operation (hr/d)	24
Annual Hours of Operation (hr/yr):	6760

Control Equipment:	None

RFO and Diesel (MMBTU/1000 gallons):	140	(AP-42, App A)
Nat. gas (BTU/scf):	1020	(AP-42, Table 1.4-1, footnote (a))
Propane (MMBTU/1000 gallons):	91.5	(AP-42, Table 1.5-1, footnote (a))
Propane (BTU/scf):	2504	(http://www.engineeringtoolbox.com/fuel-gases-combustion-values-d_510.html)

Potential To Emit - Criteria Pollutants

Criteria Pollutant	RFO			#2 Diesel			Nat. Gas			Propane			Max lb/hr	Max T/yr	Max 24hr Ave lb/hr	Max Annual Ave lb/hr
	EF	lb/hr	T/yr	EF	lb/hr	T/yr	EF	lb/hr	T/yr	EF	lb/hr	T/yr				
CO	2.10	0.0075	0.03	1.20	0.0043	0.02	8.90	0.0044	0.02	7.50	0.041	0.18	0.04	0.18	0.041	0.041
CO2e		78.88	345.47		100.30	439.33		98.40	430.98		69.85	305.96	100.30	439.33	100.304	100.304
NOx	16.00	0.0571	0.25	20.00	0.071	0.31	100.00	0.049	0.215	13.00	0.071	0.31	0.07	0.31	0.071	0.071
SO2	53.50	0.1911	0.84	0.213	0.001	0.003	0.60	0.0003	0.001	1.50	0.008	0.04	0.19	0.84	0.191	0.191
PM	56.10	0.2004	0.88	2.00	0.007	0.03	7.60	0.0037	0.016	0.70	0.004	0.02	0.20	0.88	0.200	0.200
PM10	48.45	0.1730357	0.76	1.00	0.004	0.02	7.60	0.0037	0.016	0.70	0.004	0.02	0.173	0.76	0.173	0.173
PM2.5	1.79	0.0063771	0.03	0.25	0.001	0.004	7.60	0.0037	0.016	0.70	0.004	0.02	0.006	0.03	0.006	0.006
VOC	1.00	0.0036	0.02	0.25	0.001	0.004	5.50	0.0027	0.012	1.00	0.005	0.02	0.01	0.02	0.005	0.005
Lead	0.50	0.0018	0.01	9.0E-06	4.5E-06	1.97E-05	5.0E-04	0.0000	1.07E-06	5.0E-04	0.000	4.37E-07	0.00	0.01	0.002	0.002

Emission Factor Information:

1) Carbon Monoxide: For diesel and natural gas, emission factors from AP-42 (3/04), Table 11.1-13. For RFO, EF from AP-42 (10/96), Table 1.11-2, for Atomizing burner. For propane, EF from AP-42 (7/08), Table 1.5-1,from AP-42 (7/08), Table 1.5-1, for propane combustion in commercial boilers. EFs for RFO, diesel, and propane are expressed in pounds of CO per 1000 gallons of fuel fired. EF for natural gas expressed in pounds of CO per MMscf of gas fired.

2) Carbon Dioxide Equivalent: Refer to Greenhouse Gases table for calculation methodology.

3) Nitrogen Oxides: For diesel, emission factor from AP-42 (5/10), Table 1.3-1, for Boilers < 100 MMBTU/hr. For RFO, EF from AP-42 (10/96), Table 1.11-2, for Atomizing burner. For natural gas, EF from AP-42 (7/98), Table 1.4-1, for uncontrolled, small boilers. EF for propane from AP-42 (7/08), Table 1.5-1, for propane combustion in commercial boilers. EFs for RFO, diesel, and propane expressed in pounds of NOx per 1000 gallons. EF for natural gas expressed in pounds of NOx per MMscf.

4) Sulfur Dioxide: For diesel, emission factor from AP-42 (5/10), Table 1.3-1, for Boilers < 100 MMBTU/hr; sulfur content is 0.0015%. For RFO, EF from AP-42 (10/96), Table 1.11-2, for Atomizing burner; sulfur content is 0.5%, per information from vendor. For natural gas, EF from AP-42 (7/98), Table 1.4-2. For propane, EF from AP-42 (7/08), Table 1.5-1, for propane combustion in commercial boilers; sulfur content assumed to be ≤15 gr/100 scf (Gas Processors Association Engineering Data Book, 1972). EFs for RFO, diesel, and propane expressed in pounds of SO2 per 1000 gallons. EF for natural gas expressed in pounds of SO2 per MMscf.

5) Particulate Matter: For diesel, emission factor from AP-42 (5/10), Table 1.3-6. For RFO, EF from AP-42 (10/96), Table 1.11-1, for Atomizing burner; 0.85% ash content, per info from vendor. EF for natural gas from AP-42 (7/98), Table 1.4-2. EF for propane from AP-42 (7/08), Table 1.5-1, for propane combustion in commercial boilers. EFs for RFO, diesel, and propane expressed in pounds of PM per 1000 gallons. EF for natural gas expressed in pounds of PM per MMscf.

6) PM-10: For diesel, emission factor from AP-42 (5/10), Table 1.3-6. For RFO, EF from AP-42 (10/96), Table 1.11-1, for Atomizing burner; 0.85% ash content, per info from vendor. EF for natural gas from AP-42 (7/98), Table 1.4-2, footnote c). EF for propane from AP-42 (7/08), Table 1.5-1, for propane combustion in commercial boilers, per footnote d), all PM assumed to be PM-10. EFs for RFO, diesel, and propane expressed in pounds of PM per 1000 gallons. EF for natural gas expressed in pounds of PM per MMscf.

7) PM-2.5: For diesel, emission factor from AP-42 (5/10), Table 1.3-6. For RFO, EF from AP-42 (5/10), Table 1.3-7, for Residual Oil, assuming No. 6 oil with a sulfur content of 0.5%, per vendor. EF for natural gas from AP-42 (7/98), Table 1.4-2, footnote c). EF for propane from AP-42 (7/08), Table 1.5-1, for propane combustion in commercial boilers, all PM assumed to be PM-2.5. EFs for RFO, diesel, and propane expressed in pounds of PM per 1000 gallons. EF for natural gas expressed in pounds of PM per MMscf.

8) VOC: For diesel, emission factor from AP-42 (5/10), Table 1.3-3, for TOC from Industrial boilers. For RFO, EF from AP-42 (10/96), Table 1.11-3, for TOC from Atomizing burner. For natural gas, EF from AP-42 (7/98), Table 1.4-2. For propane, EF from AP-42 (7/08), Table 1.5-1, for TOC from commercial boilers. EFs for RFO, diesel, and propane expressed in pounds of VOC per 1000 gallons. EF for natural gas expressed in pounds of VOC per MMscf of gas fired.

9) Lead: For diesel, emission factor from AP-42 (5/10), Table 1.3-10. For RFO, EF from AP-42 (10/96), Table 1.11-1, for Atomizing burner, 0.5% lead, per vendor's specifications. EF for natural gas from AP-42 (7/98), Table 1.4-2. For propane, EF for natural gas was applied. EF for RFO expressed in pounds of Pb per 1000 gallons. EF for diesel expressed in pounds Pb per MMBTU. EFs for natural gas and propane expressed in pounds of Pb per MMscf.

Potential To Emit - Non-Carcinogenic TAPs

Non-Carcinogen TAP	RFO			#2 Diesel			Nat. Gas			Propane			Max lb/hr	Max T/yr	Max 24hr Ave lb/hr	Max Annual Ave lb/hr
	EF	lb/hr	T/yr	EF	lb/hr	T/yr	EF	lb/hr	T/yr	EF	lb/hr	T/yr				
Antimony	4.50E-03	1.61E-05	7.04E-05										1.61E-05	7.04E-05	1.61E-05	1.61E-05
Barium							4.40E-03	2.16E-06	9.45E-06	4.40E-03	8.79E-07	3.85E-06	2.16E-06	9.45E-06	2.16E-06	2.16E-06
Chromium	1.80E-01	6.43E-04	2.82E-03	3.00E-06	1.50E-06	6.57E-06	1.40E-03	6.86E-07	3.01E-06	1.40E-03	2.80E-07	1.22E-06	6.43E-04	2.82E-03	6.43E-04	6.43E-04
Cobalt	5.20E-03	1.86E-05	8.13E-05				8.40E-05	4.12E-08	1.80E-07	8.40E-05	1.68E-08	7.35E-08	1.86E-05	8.13E-05	1.86E-05	1.86E-05
Copper				6.00E-06	3.00E-06	1.31E-05	8.50E-04	4.17E-07	1.83E-06	8.50E-04	1.70E-07	7.43E-07	3.00E-06	1.31E-05	3.00E-06	3.00E-06
Dichlorobenzene	8.00E-07	2.9E-09	1.25E-08				1.20E-03	5.88E-07	2.58E-06	1.20E-03	2.40E-07	1.05E-06	5.88E-07	2.58E-06	5.88E-07	5.88E-07
Hexane							1.8	8.82E-04	3.86E-03	1.8	3.59E-04	1.57E-03	8.82E-04	3.86E-03	8.82E-04	8.82E-04
Hydrochloric Acid	6.6	2.4E-02	1.03E-01			0.00E+00			0.00E+00			0.00E+00	2.36E-02	1.03E-01	2.36E-02	2.36E-02
Manganese	5.00E-02	1.79E-04	7.82E-04	6.00E-06	3.00E-06	1.31E-05	3.80E-04	1.86E-07	8.16E-07	3.80E-04	7.59E-08	3.32E-07	1.79E-04	7.82E-04	1.79E-04	1.79E-04
Mercury				3.00E-06	1.50E-06	6.57E-06	2.60E-04	1.27E-07	5.58E-07	2.60E-04	5.19E-08	2.27E-07	1.50E-06	6.57E-06	1.50E-06	1.50E-06
Molybdenum							1.10E-03	5.39E-07	2.36E-06	1.10E-03	2.20E-07	9.62E-07	5.39E-07	2.36E-06	5.39E-07	5.39E-07
Naphthalene	9.20E-05	3.3E-07	1.4E-06	1.70E-02	6.1E-05	2.7E-04	6.10E-04	2.99E-07	1.31E-06	6.10E-04	1.22E-07	5.34E-07	6.07E-05	2.66E-04	6.07E-05	6.07E-05
Pentane							2.60E+00	1.27E-03	5.58E-03	2.60E+00	5.19E-04	2.27E-03	1.27E-03	5.58E-03	1.27E-03	1.27E-03
Phenol	3.80E-05	1.0E-07	4.4E-07										1.00E-07	4.38E-07	1.00E-07	1.00E-07
Selenium				1.50E-05	7.50E-06	3.29E-05	2.40E-05	1.18E-08	5.15E-08	2.40E-05	4.79E-09	2.10E-08	7.50E-06	3.29E-05	7.50E-06	7.50E-06
Toluene							3.40E-03	1.67E-06	7.30E-06	3.40E-03	6.79E-07	2.97E-06	1.67E-06	7.30E-06	1.67E-06	1.67E-06
Vanadium							2.30E-03	1.13E-06	4.94E-06	2.30E-03	4.59E-07	2.01E-06	1.13E-06	4.94E-06	1.13E-06	1.13E-06
Zinc				4.00E-06	2.00E-06	8.76E-06	2.90E-02	1.42E-05	6.23E-05	2.90E-02	5.79E-06	2.54E-05	1.42E-05	6.23E-05	1.42E-05	1.42E-05
TOTALS:			1.07E-01			3.47E-04			9.54E-03			3.89E-03	0.027	0.117		

Potential To Emit - Carcinogenic TAPs

Carcinogen TAPs	RFO			#2 Diesel			Nat. Gas			Propane			Max lb/hr	Max T/yr	Max 24hr Ave lb/hr	Max Annual Ave lb/hr
	EF	lb/hr	T/yr	EF	lb/hr	T/yr	EF	lb/hr	T/yr	EF	lb/hr	T/yr				
Acenaphthene				5.30E-04	1.9E-06	8.3E-06	1.80E-06	8.82E-10	3.86E-09	1.80E-06	3.59E-10	1.57E-09	1.89E-06	8.29E-06	1.89E-06	1.89E-06
Acenaphthylene				2.00E-04	7.1E-07	3.1E-06	1.80E-06	8.82E-10	3.86E-09	1.80E-06	3.59E-10	1.57E-09	7.14E-07	3.13E-06	7.14E-07	7.14E-07
Anthracene	1.00E-04	3.6E-07	1.6E-06	1.80E-04	6.4E-07	2.8E-06	2.40E-06	1.18E-09	5.15E-09	2.40E-06	4.79E-10	2.10E-09	6.43E-07	2.82E-06	6.43E-07	6.43E-07
Arsenic	6.00E-02	2.14E-04	9.39E-04	4.00E-06	2.00E-06	8.76E-06	2.00E-04	9.80E-08	4.29E-07	2.00E-04	3.99E-08	1.75E-07	2.14E-04	9.39E-04	2.14E-04	2.14E-04
Benzene							2.10E-03	1.03E-06	4.51E-06	2.10E-03	4.19E-07	1.84E-06	1.03E-06	4.51E-06	1.03E-06	1.03E-06
Benzo(a)pyrene	4.00E-03	1.4E-05	6.3E-05			0.00E+00	1.20E-06	5.88E-10	2.58E-09	1.20E-06	2.40E-10	1.05E-09	1.43E-05	6.26E-05	1.43E-05	1.43E-05
Benzo(g,h,i)perylene							1.20E-06	5.88E-10	2.58E-09	1.20E-06	2.40E-10	1.05E-09	5.88E-10	2.58E-09	5.88E-10	5.88E-10
Beryllium	1.80E-03	6.43E-06	2.82E-05	3.00E-06	1.50E-06	6.57E-06	1.20E-05	5.88E-09	2.58E-08	1.20E-05	2.40E-09	1.05E-08	6.43E-06	2.82E-05	6.43E-06	6.43E-06
Bis(2-ethylhexyl)phthalate	2.20E-03	7.9E-06	3.4E-05										7.86E-06	3.44E-05	7.86E-06	7.86E-06
Cadmium	1.20E-02	4.29E-05	1.88E-04	3.00E-06	1.50E-06	6.57E-06	1.10E-03	5.39E-07	2.36E-06	1.10E-03	2.20E-07	9.62E-07	4.29E-05	1.88E-04	4.29E-05	4.29E-05
Dioxin/Furans (see below)													8.21E-10	3.60E-09		1.36E-12
Fluoranthene				4.40E-05	1.6E-07	6.9E-07	3.00E-06	1.47E-09	6.44E-09	3.00E-06	5.99E-10	2.62E-09	1.57E-07	6.88E-07	1.57E-07	1.57E-07
Fluorene				3.20E-05	1.1E-07	5.0E-07	2.80E-06	1.37E-09	6.01E-09	2.80E-06	5.59E-10	2.45E-09	1.14E-07	5.01E-07	1.14E-07	1.14E-07
Formaldehyde				6.10E-02	2.2E-04	9.5E-04	7.50E-02	3.68E-05	1.61E-04	7.50E-02	1.50E-05	6.56E-05	2.18E-04	9.54E-04	2.18E-04	2.18E-04
3-Methylchloranthrene							1.80E-06	8.82E-10	3.86E-09	1.80E-06	3.59E-10	1.57E-09	8.82E-10	3.86E-09	8.82E-10	8.82E-10
2-Methylnaphthalene							2.40E-05	1.18E-08	5.15E-08	2.40E-05	4.79E-09	2.10E-08	1.18E-08	5.15E-08	1.18E-08	1.18E-08
Naphthalene	9.20E-05	3.3E-07	1.4E-06	1.70E-02	6.1E-05	2.7E-04	6.10E-04	2.99E-07	1.31E-06	6.10E-04	1.22E-07	5.34E-07	6.07E-05	2.66E-04	6.07E-05	6.07E-05
Nickel	1.60E-01	5.71E-04	2.50E-03	3.00E-06	1.50E-06	6.57E-06	2.10E-03	1.03E-06	4.51E-06	2.10E-03	4.19E-07	1.84E-06	5.71E-04	2.50E-03	5.71E-04	5.71E-04
Phenanthrene	1.00E-04	3.6E-07	1.6E-06	4.90E-03	1.8E-05	7.7E-05	1.70E-05	8.33E-09	3.65E-08	1.70E-05	3.39E-09	1.49E-08	1.75E-05	7.67E-05	1.75E-05	1.75E-05
POM (see below)	1.20E-02	4.3E-05	1.9E-04	3.30E-03	1.2E-05	5.2E-05	1.14E-05	5.59E-09	2.45E-08	1.14E-05	2.28E-09	9.97E-09	4.29E-05	1.88E-04	4.29E-05	4.29E-05
Pyrene	8.30E-06	3.0E-08	1.3E-07	3.20E-05	1.1E-07	5.0E-07	5.00E-06	2.45E-09	1.07E-08	5.00E-06	9.98E-10	4.37E-09	1.14E-07	5.01E-07	1.14E-07	1.14E-07
TOTALS:			3.95E-03			1.39E-03			1.74E-04			7.10E-05	0.001	0.005		

Emission Factor Information:

1) Metals: For diesel, emission factors from AP-42 (5/10), Table 1.3-10. For RFO, EFs from AP-42 (10/96), Table 1.11-4, for Atomizing burner. For natural gas, EFs from AP-42 (7/98), Table 1.4-4. For propane, EFs for nat. gas were applied. EFs for diesel expressed in pounds of pollutant per MMBTU. EFs for RFO expressed in pounds of pollutant per 1000 gallons. EFs for natural gas and propane expressed in pounds of pollutant per MMscf.

2) Organic Pollutants: For diesel, emission factors from AP-42 (5/10), Table 1.3-8, for Distillate oil, and AP-42 (3/04), Table 11.1-13. for Hot oil system fired with No. 2 fuel oil. For diesel, EF for POM taken from Table 1.3-8 rather than summing PAHs, as this is the more conservative emissions estimate. For RFO, EFs from AP-42 (10/96), Table 1.11-5, for Atomizing burner (i.e., except for bis(2-ethylhexyl)phthalate, dichlorobeneze, benz(a)anthracene, and benzo(a)pyrene which rely on values for Vaporizing burner). For HCl from RFO, EF from AP-42 (10/96), Table 1.11-3; 0.1% weight used, per vendor information (i.e., <1000ppm for all halogens). For natural gas, EFs from AP-42 (7/98), Table 1.4-3. For propane, EFs for nat. gas were applied. EFs for diesel and RFO expressed in pounds of pollutant per 1000 gallons. EFs for natural gas and propane expressed in pounds of pollutant per MMscf.

3) Dioxin/Furans: Max Annual Ave value represents emissions from all dioxin/furan mixtures, expressed as equivalent emissions of 2,3,7,8-TCDD, per IDAPA 58.01.01.586. Refer to Dioxin/Furan Mixture table for calculation methodology.

4) POM: Emission factors for POM based on polyaromatic hydrocarbon mixture identified in IDAPA 58.01.01.586. Refer to Polycyclic Organic Matter Mixture table for calculation methodology.

Polycyclic Organic Matter Mixture

Polycyclic Organic Matter (POM)	RFO			#2 Diesel			Nat. Gas			Propane		
	EF	lb/hr	T/yr	EF	lb/hr	T/yr	EF	lb/hr	T/yr	EF	lb/hr	T/yr
Benzo(a)anthracene	4.00E-03	1.43E-05	6.26E-05			0.00E+00	1.80E-06	8.82E-10	3.86E-09	1.80E-06	3.59E-10	1.57E-09
Benzo(b)fluoranthene			0.00E+00	1.00E-04	3.6E-07	1.6E-06	1.80E-06	8.82E-10	3.86E-09	1.80E-06	3.59E-10	1.57E-09
Benzo(k)fluoranthene			0.00E+00			0.00E+00	1.80E-06	8.82E-10	3.86E-09	1.80E-06	3.59E-10	1.57E-09
Benzo(a)pyrene	4.00E-03	1.43E-05	6.26E-05			0.00E+00	1.20E-06	5.88E-10	2.58E-09	1.20E-06	2.40E-10	1.05E-09
Chrysene	4.00E-03	1.43E-05	6.26E-05			0.00E+00	1.80E-06	8.82E-10	3.86E-09	1.80E-06	3.59E-10	1.57E-09
Dibenzo(a,h)anthracene			0.00E+00			0.00E+00	1.20E-06	5.88E-10	2.58E-09	1.20E-06	2.40E-10	1.05E-09
Indeno(1,2,3-cd)pyrene			0.00E+00			0.00E+00	1.80E-06	8.82E-10	3.86E-09	1.80E-06	3.59E-10	1.57E-09
TOTALS:	1.20E-02		1.88E-04	3.30E-03		1.56E-06	1.14E-05		2.45E-08	1.14E-05		9.97E-09

Dioxin/Furan Mixture

Dioxin/Furan	RFO			#2 Diesel			Max lb/hr	Max T/yr	TEF	Adjusted Max Annual Ave lb/hr
	EF	lb/hr	T/yr	EF	lb/hr	T/yr				
1,2,3,4,7,8-HxCDD				6.90E-10	2.46E-12	1.08E-11	2.46E-12	1.08E-11	0.10	2.46E-13
1,2,3,7,8,9-HxCDD				7.60E-10	2.71E-12	1.19E-11	2.71E-12	1.19E-11	0.10	2.71E-13
HxCDD				6.20E-09	2.21E-11	9.70E-11	2.21E-11	9.70E-11		
1,2,3,4,6,7,8-Hp-CDD				1.50E-08	5.36E-11	2.35E-10	5.36E-11	2.35E-10	0.01	5.36E-13
HpCDD				2.00E-08	7.14E-11	3.13E-10	7.14E-11	3.13E-10		
Octa CDD				1.60E-07	5.71E-10	2.50E-09	5.71E-10	2.50E-09	0.0003	1.71E-13
Total PCDD				2.00E-07	7.14E-10	3.13E-09	7.14E-10	3.13E-09		
TCDF				3.30E-09	1.18E-11	5.16E-11	1.18E-11	5.16E-11		
PeCDF				4.80E-10	1.71E-12	7.51E-12	1.71E-12	7.51E-12		
HxCDF				2.00E-09	7.14E-12	3.13E-11	7.14E-12	3.13E-11		
1,2,3,4,6,7,8-HpCDF				3.50E-09	1.25E-11	5.48E-11	1.25E-11	5.48E-11	0.01	1.25E-13
HpCDF				9.70E-09	3.46E-11	1.52E-10	3.46E-11	1.52E-10		
Octa CDF				1.20E-08	4.29E-11	1.88E-10	4.29E-11	1.88E-10	0.0003	1.29E-14
Total PCDF				3.10E-08	1.11E-10	4.85E-10	1.11E-10	4.85E-10		
Total PCDD/PCDF				2.30E-07	8.21E-10	3.60E-09	8.21E-10	3.60E-09		
							TOTAL ADJUSTED:			1.36E-12

Emission Factor Information:

1) Organic Pollutants:

For diesel, emission factors from AP-42 (5/10), Table 1.3-8, for Distillate oil, and AP-42 (3/04), Table 11.1-13. for Hot oil system fired with No. 2 fuel oil.
For diesel, EF for POM taken from Table 1.3-8 rather than summing PAHs, as this is the more conservative emissions estimate.
For RFO, EFs from AP-42 (10/96), Table 1.11-5, for Atomizing burner (i.e., except for dichlorobenezne, benz(a)anthracene, and benzo(a)pyrene which rely on values for Vaporizing burner). For natural gas, EFs from AP-42 (7/98), Table 1.4-3. For propane, EFs for nat. gas were applied.
EFs for diesel and RFO expressed in pounds of pollutant per 1000 gallons. EFs for natural gas and propane expressed in pounds of pollutant per MMscf.

2) Toxic Equivalency Factors:

2005, Van den Berg, et al, The 2005 World Health Organization Reevaluation of Human and Mammalian Toxic Equivalency Factors for Dioxins and Dioxin-Like Compounds, Toxicological Sciences 93(2), 223-241 (2006). Accessible at http://toxsci.oxfordjournals.org/cgi/reprint/93/2/223. Use of the 2005 WHO toxic equivalency factors (TEFs) is consistent with current EPA recommendations for TRI reporting (72 FR 26544, May 10, 2007). IDAPA 58.01.01.586, TAPs Carcinogenic Increments:
Total of adjusted emission rates are treated as a single TAP (2,3,7,8 TCDD)

Greenhouse Gases

GHG	RFO			#2 Diesel			Nat. Gas			Propane			Max lb/hr	Max T/yr
	EF	lb/hr	T/yr	EF	lb/hr	T/yr	EF	lb/hr	T/yr	EF	lb/hr	T/yr		
CO2	22000.0	78.57	344.14	28000.0	100.00	438.00	2.0E+05	98.04	429.41	12500.0	68.31	299.18	100.00	438.00
Methane	0.216	0.001	0.003	0.216	0.001	0.003	2.3	0.001	0.005	0.2	0.001	0.005	0.001	0.005
N2O	0.260	0.001	0.004	0.260	0.001	0.004	2.2	0.001	0.005	0.9	0.005	0.02	0.005	0.02
CO2e		78.88	345.47		100.30	439.33		98.40	430.98		69.85	305.96	100.30	439.33

1) Carbon Dioxide:

For RFO, EF from AP-42, Table 1.11-3 (10/96), for Atomizing burner. Emission factors for #2 diesel and nat. gas from AP-42 (3/04), Table 11.1-13.
For propane, EF from AP-42 (7/08), Table 1.5-1, for propane combustion in commercial boilers. EFs for RFO, diesel, and propane are expressed in pounds of CO2 per 1000 gallons.
EF for natural gas expressed in pounds of CO2 per MMscf of gas fired.

2) Methane:

For #2 diesel, emission factors from AP-42 (5/10), Table 1.3-3, Commercial/institutional/residential combustors, Distillate oil fired; EF expressed in pounds of methane per 1000 gallons.
For RFO, the EF for #2 diesel was applied. For natural gas, EF from AP-42 (7/98), Table 1.4-2, uncontrolled; EF expressed in pounds of methane per MMSCF.
For propane, EF from AP-42 (7/08), Table 1.5-1; EF expressed in pounds methane per 1000 gallons.

3) N2O:

For #2 diesel, emission factor from AP-42 (5/10), Table 1.3-8; EF expressed in pounds of N2O per 1000 gallons. For RFO, the EF for #2 diesel was applied. For natural gas, EF from AP-42 (7/98), Table 1.4-2, uncontrolled; EF expressed in pounds of N2O per MMSCF. For propane, EF from AP-42 (7/08), Table 1.5-1; EF expressed in lb N2O per 1000 gallons.

4) CO2e:

The sum of CO2, methane, and N2O expressed as carbon dioxide equivalent. A global warming potential of 21 was applied to methane. A GWP of 310 was applied to N2O.

Potential To Emit - HAPs

HAP	RFO			#2 Diesel			Nat. Gas			Propane			Max lb/hr	Max T/yr
	EF	lb/hr	T/yr	EF	lb/hr	T/yr	EF	lb/hr	T/yr	EF	lb/hr	T/yr		
Acenaphthene[1]				5.30E-04	1.9E-06	8.3E-06	1.80E-06	8.82E-10	3.86E-09	1.80E-06	3.59E-10	1.57E-09	1.89E-06	8.29E-06
Acenaphthylene[1]				2.00E-04	7.1E-07	3.1E-06	1.80E-06	8.82E-10	3.86E-09	1.80E-06	3.59E-10	1.57E-09	7.14E-07	3.13E-06
Acetaldehyde		0.0E+00	0.0E+00		0.0E+00	0.0E+00		0.0E+00	0.0E+00		0.0E+00	0.0E+00	0.00E+00	0.00E+00
Acrolein		0.0E+00	0.0E+00		0.0E+00	0.0E+00		0.0E+00	0.0E+00		0.0E+00	0.0E+00	0.00E+00	0.00E+00
Antimony	4.50E-03	1.61E-05	7.04E-05										1.61E-05	7.04E-05
Anthracene[1]	1.00E-04	3.6E-07	1.6E-06	1.80E-04	6.4E-07	2.8E-06	2.40E-06	1.18E-09	5.15E-09	2.40E-06	4.79E-10	2.10E-09	6.43E-07	2.82E-06
Arsenic	6.00E-02	2.14E-04	9.39E-04	4.00E-06	2.00E-06	8.76E-06	2.00E-04	9.80E-08	4.29E-07	2.00E-04	3.99E-08	1.75E-07	2.14E-04	9.39E-04
Benzene							2.10E-03	1.03E-06	4.51E-06	2.10E-03	4.19E-07	1.84E-06	1.03E-06	4.51E-06
Benzo(a)anthracene[1]	4.00E-03	1.4E-05	6.3E-05			0.00E+00	1.80E-06	8.82E-10	3.86E-09	1.80E-06	3.59E-10	1.57E-09	1.43E-05	6.26E-05
Benzo(a)pyrene[1]	4.00E-03	1.4E-05	6.3E-05			0.00E+00	1.20E-06	5.88E-10	2.58E-09	1.20E-06	2.40E-10	1.05E-09	1.43E-05	6.26E-05
Benzo(b)fluoranthene[1]			0.00E+00	1.00E-04	3.6E-07	1.6E-06	1.80E-06	8.82E-10	3.86E-09	1.80E-06	3.59E-10	1.57E-09	3.57E-07	1.56E-06
Benzo(e)pyrene[1]		0.0E+00	0.0E+00		0.0E+00	0.0E+00		0.0E+00	0.0E+00		0.0E+00	0.0E+00	0.00E+00	0.00E+00
Benzo(g,h,i)perylene[1]							1.20E-06	5.88E-10	2.58E-09	1.20E-06	2.40E-10	1.05E-09	5.88E-10	2.58E-09
Benzo(k)fluoranthene[1]			0.00E+00			0.00E+00	1.80E-06	8.82E-10	3.86E-09	1.80E-06	3.59E-10	1.57E-09	8.82E-10	3.86E-09
Beryllium	1.80E-03	6.43E-06	2.82E-05	3.00E-06	1.50E-06	6.57E-06	1.20E-05	5.88E-09	2.58E-08	1.20E-05	2.40E-09	1.05E-08	6.43E-06	2.82E-05
Bis(2-ethylhexyl)phthalate	2.20E-03	7.9E-06	3.4E-05										7.86E-06	3.44E-05
1,3-Butadiene		0.0E+00	0.0E+00		0.0E+00	0.0E+00		0.0E+00	0.0E+00		0.0E+00	0.0E+00	0.00E+00	0.00E+00
Cadmium	1.20E-02	4.29E-05	1.88E-04	3.00E-06	1.50E-06	6.57E-06	1.10E-03	5.39E-07	2.36E-06	1.10E-03	2.20E-07	9.62E-07	4.29E-05	1.88E-04
Carbon Disulfide		0.0E+00	0.0E+00		0.0E+00	0.0E+00		0.0E+00	0.0E+00		0.0E+00	0.0E+00	0.00E+00	0.00E+00
Chromium	1.80E-01	6.43E-04	2.82E-03	3.00E-06	1.50E-06	6.57E-06	1.40E-03	6.86E-07	3.01E-06	1.40E-03	2.80E-07	1.22E-06	6.43E-04	2.82E-03
Hexavalent Chromium		0.0E+00	0.0E+00		0.0E+00	0.0E+00		0.0E+00	0.0E+00		0.0E+00	0.0E+00	0.00E+00	0.00E+00
Chrysene[1]	4.00E-03	1.4E-05	6.3E-05			0.00E+00	1.80E-06	8.82E-10	3.86E-09	1.80E-06	3.59E-10	1.57E-09	1.43E-05	6.26E-05
Cobalt	5.20E-03	1.86E-05	8.13E-05				8.40E-05	4.12E-08	1.80E-07	8.40E-05	1.68E-08	7.35E-08	1.86E-05	8.13E-05
Cumene		0.0E+00	0.0E+00		0.0E+00	0.0E+00		0.0E+00	0.0E+00		0.0E+00	0.0E+00	0.00E+00	0.00E+00
Dibenzo(a,h)anthracene[1]			0.00E+00			0.00E+00	1.20E-06	5.88E-10	2.58E-09	1.20E-06	2.40E-10	1.05E-09	5.88E-10	2.58E-09
Dibutylphthalate	3.40E-05	1.2E-07	5.3E-07										1.21E-07	5.32E-07
Dichlorobenzene	8.00E-07	2.9E-09	1.3E-08				1.20E-03	5.88E-07	2.58E-06	1.20E-03	2.40E-07	1.05E-06	5.88E-07	2.58E-06
Ethyl Benzene		0.0E+00	0.0E+00		0.0E+00	0.0E+00		0.0E+00	0.0E+00		0.0E+00	0.0E+00	0.00E+00	0.00E+00
Fluoranthene[1]				4.40E-05	1.6E-07	6.9E-07	3.00E-06	1.47E-09	6.44E-09	3.00E-06	5.99E-10	2.62E-09	1.57E-07	6.88E-07
Fluorene[1]				3.20E-05	1.1E-07	5.0E-07	2.80E-06	1.37E-09	6.01E-09	2.80E-06	5.59E-10	2.45E-09	1.14E-07	5.01E-07
Formaldehyde				6.10E-02	2.2E-04	9.5E-04	7.50E-02	3.68E-05	1.61E-04	7.50E-02	1.50E-05	6.56E-05	2.18E-04	9.54E-04
Hexane							1.8	8.82E-04	3.86E-03	1.8	3.59E-04	1.57E-03	8.82E-04	3.86E-03
Hydrochloric Acid	6.6	2.4E-02	1.03E-01			0.00E+00			0.00E+00			0.00E+00	2.36E-02	1.03E-01
Indeno(1,2,3-cd)pyrene[1]			0.00E+00			0.00E+00	1.80E-06	8.82E-10	3.86E-09	1.80E-06	3.59E-10	1.57E-09	8.82E-10	3.86E-09
Lead	0.50	0.0018	0.01	9.0E-06	2.5E-10	1.97E-05	5.0E-04	0.0000	1.07E-06	5.0E-04	0.000	4.37E-07	0.00	0.01
Manganese	5.00E-02	1.79E-04	7.82E-04	6.00E-06	3.00E-06	1.31E-05	3.80E-04	1.86E-07	8.16E-07	3.80E-04	7.59E-08	3.32E-07	1.79E-04	7.82E-04
Mercury				3.00E-06	1.50E-06	6.57E-06	2.60E-04	1.27E-07	5.58E-07	2.60E-04	5.19E-08	2.27E-07	1.50E-06	6.57E-06
Methyl Chloroform		0.0E+00	0.0E+00		0.0E+00	0.0E+00		0.0E+00	0.0E+00		0.0E+00	0.0E+00	0.00E+00	0.00E+00
Methyl Ethyl Ketone		0.0E+00	0.0E+00		0.0E+00	0.0E+00		0.0E+00	0.0E+00		0.0E+00	0.0E+00	0.00E+00	0.00E+00
2-Methylnaphthalene[1]							1.80E-06	8.82E-10	3.86E-09	1.80E-06	3.59E-10	1.57E-09	8.82E-10	3.86E-09
3-Methylchloranthrene[1]							2.40E-05	1.18E-08	5.15E-08	2.40E-05	4.79E-09	2.10E-08	1.18E-08	5.15E-08
Naphthalene[1]	9.20E-05	3.3E-07	1.4E-06	1.70E-02	6.1E-05	2.7E-04	6.10E-04	2.99E-07	1.31E-06	6.10E-04	1.22E-07	5.34E-07	6.07E-05	2.66E-04
Nickel	1.60E-01	5.71E-04	2.50E-03	3.00E-06	1.50E-06	6.57E-06	2.10E-03	1.03E-06	4.51E-06	2.10E-03	4.19E-07	1.84E-06	5.71E-04	2.50E-03
Pentane							2.60E+00	1.27E-03	5.58E-03	2.60E+00	5.19E-04	2.27E-03	1.27E-03	5.58E-03
Perylene[1]		0.0E+00	0.0E+00		0.0E+00	0.0E+00		0.0E+00	0.0E+00		0.0E+00	0.0E+00	0.00E+00	0.00E+00
Phenanthrene[1]	1.00E-04	3.6E-07	1.6E-06	4.90E-03	1.8E-05	7.7E-05	1.70E-05	8.33E-09	3.65E-08	1.70E-05	3.39E-09	1.49E-08	1.75E-05	7.67E-05
Phenol	2.80E-05	1.0E-07	4.4E-07										1.00E-07	4.38E-07
Phosphorus		0.0E+00	0.0E+00		0.0E+00	0.0E+00		0.0E+00	0.0E+00		0.0E+00	0.0E+00	0.00E+00	0.00E+00
POM (see below)													1.25E-04	5.48E-04
Propionaldehyde		0.0E+00	0.0E+00		0.0E+00	0.0E+00		0.0E+00	0.0E+00		0.0E+00	0.0E+00	0.00E+00	0.00E+00
Pyrene[1]	8.30E-06	3.0E-08	1.3E-07	3.20E-05	1.1E-07	5.0E-07	5.00E-06	2.45E-09	1.07E-08	5.00E-06	9.98E-10	4.37E-09	1.14E-07	5.01E-07
Selenium				1.50E-05	7.50E-06	3.29E-05	2.40E-05	1.18E-08	5.15E-08	2.40E-05	4.79E-09	2.10E-08	7.50E-06	3.29E-05
Styrene		0.0E+00	0.0E+00		0.0E+00	0.0E+00		0.0E+00	0.0E+00		0.0E+00	0.0E+00	0.00E+00	0.00E+00
2,3,7,8-TCDD		0.0E+00	0.0E+00		0.0E+00	0.0E+00		0.0E+00	0.0E+00		0.0E+00	0.0E+00	0.00E+00	0.00E+00
Toluene							3.40E-03	1.67E-06	7.30E-06	3.40E-03	6.79E-07	2.97E-06	1.67E-06	7.30E-06
Total PCDD/PCDF[3]				2.3E-07	8.2E-10	3.6E-09							8.21E-10	3.60E-09
Trichloroethylene		0.0E+00	0.0E+00		0.0E+00	0.0E+00		0.0E+00	0.0E+00		0.0E+00	0.0E+00	0.00E+00	0.00E+00
Xylene		0.0E+00	0.0E+00		0.0E+00	0.0E+00		0.0E+00	0.0E+00		0.0E+00	0.0E+00	0.00E+00	0.00E+00
TOTALS:			0.12			0.00			0.01			0.00	0.03	0.13

1) Metals: For diesel, emission factors from AP-42 (5/10), Table 1.3-10. For RFO, EFs from AP-42 (10/96), Table 1.11-4, for Atomizing burner. For natural gas, EFs from AP-42 (7/98), Table 1.4-4. For propane, EFs for nat. gas were applied. EFs for diesel expressed in pounds of pollutant per MMBTU. EFs for RFO expressed in pounds of pollutant per 1000 gallons. EFs for natural gas and propane expressed in pounds of pollutant per MMscf.

2) Organic Pollutants: For diesel, emission factors from AP-42 (5/10), Table 1.3-8, for Distillate oil, and AP-42 (3/04), Table 11.1-13. for Hot oil system fired with No. 2 fuel oil. For RFO, EFs from AP-42 (10/96), Table 1.11-5, for Atomizing burner (i.e., except for bis(2-ethylhexyl)phthalate, dichlorobeneze, benz(a)anthracene, and benzo(a)pyrene which rely on values for Vaporizing burner). For HCl from RFO, EF from AP-42 (10/96), Table 1.11-3; 0.1% weight used, per vendor information (i.e., <1000ppm for all halogens). For natural gas, EFs from AP-42 (7/98), Table 1.4-3. For propane, EFs for nat. gas were applied. EFs for diesel and RFO expressed in pounds of pollutant per 1000 gallons. EFs for natural gas and propane expressed in pounds of pollutant per MMscf.

3) POM: Maximum PTE estimates for POM based on polycyclic organic matter mixture as defined by 1900 CAA Amendments. Compounds included in the mixture are denoted in the table. To avoid double counting, the total, maximum PTE estimates do not include POM (i.e., individual compounds are summed separately) or 2, 3, 7, 8-TCDD (included in Total PCDD/PCDF).

Emission Unit:	Operations Generator
Manufacturer/Model:	Cummins, Model QST30-G2, 2006 model year
Fuel Type(s):	#2 Diesel
Rated Generator Capacity (kW):	800
Gross Engine Output (bhp):	1200
Calculated Fuel Consumption (gal/hr):	60
Calculated Capacity (MMBTU/hr):	8.4
Daily Hours of Operation (hr/d)	13.5
Annual Hours of Operation (hr/yr):	2578.5

Control Equipment:	Tier 2 Certified Engine

Diesel (MMBTU/1000 gallons):	140	(AP-42 (9/85), App A)
Average BSFC (BTU/hp-hr):	7000	(AP-42 (10/96), Table 3.4-1, footnote e)

Potential To Emit - Criteria Pollutants

Criteria Pollutant	#2 Diesel			Max 24hr Ave	Max Annual Ave
	EF	lb/hr	T/yr	lb/hr	lb/hr
CO	0.822	6.90	8.90	3.88	2.03
CO2e		1387.43	1788.74	780.43	408.39
NOx	1.50	12.60	16.24	7.09	3.71
SO2	0.0015	0.01	0.02	0.01	0.00
PM	0.047	0.39	0.51	0.22	0.12
PM10	0.047	0.39	0.51	0.22	0.12
PM2.5	0.056	0.47	0.60	0.26	0.14
VOC	0.305	2.56	3.30	1.44	0.75
Lead					

Emission Factor Information:

1) Carbon Monoxide: Emission factor from 40 CFR 89.112, Table 1, for Tier 2 engine >560kW. Expressed in pounds of CO per MMBTU fuel input.

2) Carbon Dioxide Equivalent: Refer to Greenhouse Gases table for calculation methodology.

3) Nitrogen Oxides: Emission factor from 40 CFR 89.112, Table 1, for Tier 2 engine >560kW. Applied EF for NMHC+NOx, assuming 100% NOx. EF expressed in pounds of NOx per MMBTU fuel input.

4) Sulfur Dioxide: Emission factor from AP-42 (10/96), Table 3.4-1, for Diesel fuel; sulfur content is 0.0015%. EF expressed as pounds SO2 per MMBTU fuel input.

5) Particulate Matter: Emission factor from 40 CFR 89.112, Table 1, for Tier 2 engine >560kW. Expressed in pounds of PM per MMBTU fuel input.

6) PM-10: Assumed all PM equal to PM-10. Expressed in pounds of PM-10 per MMBTU fuel input.

7) PM-2.5: Emission factor from AP-42 (10/96), Table 3.4-2, summed EFs for filterable PM<3 and condensable PM. Expressed in pounds of PM-2.5 per MMBTU fuel input.

8) VOCs: Emission factor from 40 CFR 89.112, Table 1, for Tier 1 engine >560kW, assumed HC is equal to VOC. Expressed in pounds of VOC per MMBTU fuel input.

9) Lead: No emission factor identified for lead emissions from large uncontrolled stationary diesel engines.

Potential To Emit - Non-Carcinogenic TAPs

Non-Carcinogen TAP	#2 Diesel			Max 24hr Ave	Max Annual Ave
	EF	lb/hr	T/yr	lb/hr	lb/hr
Acrolein	7.88E-06	6.62E-05	8.53E-05	3.72E-05	1.95E-05
Naphthalene	1.30E-04	1.09E-03	1.41E-03	6.14E-04	3.21E-04
Toluene	2.81E-04	2.36E-03	3.04E-03	1.33E-03	6.95E-04
Xylenes	1.93E-04	1.62E-03	2.09E-03	9.12E-04	4.77E-04
TOTALS:			6.63E-03		

Potential To Emit - Carcinogen TAPs

Carcinogen TAP	#2 Diesel			Max 24hr Ave	Max Annual Ave
	EF	lb/hr	T/yr	lb/hr	lb/hr
Acenaphthene	4.68E-06	3.93E-05	5.07E-05	2.21E-05	1.16E-05
Acenaphthylene	9.23E-06	7.75E-05	1.00E-04	4.36E-05	2.28E-05
Acetaldehyde	2.52E-05	2.12E-04	2.73E-04	1.19E-04	6.23E-05
Anthracene	1.23E-06	1.03E-05	1.33E-05	5.81E-06	3.04E-06
Benzene	7.76E-04	6.52E-03	8.40E-03	3.67E-03	1.92E-03
Benzo(a)pyrene	2.57E-07	2.16E-06	2.78E-06	1.21E-06	6.35E-07
Benzo(g,h,i)perylene	5.56E-07	4.67E-06	6.02E-06	2.63E-06	1.37E-06
Fluoranthene	4.03E-06	3.39E-05	4.36E-05	1.90E-05	9.96E-06
Fluorene	1.28E-05	1.08E-04	1.39E-04	6.05E-05	3.16E-05
Formaldehyde	7.89E-05	6.63E-04	8.54E-04	3.73E-04	1.95E-04
Naphthalene	1.30E-04	1.09E-03	1.41E-03	6.14E-04	3.21E-04
Phenanthrene	4.08E-05	3.43E-04	4.42E-04	1.93E-04	1.01E-04
POM (see below)	4.49E-06	3.77E-05	4.86E-05	2.12E-05	1.11E-05
Pyrene	3.71E-06	3.12E-05	4.02E-05	1.75E-05	9.17E-06
TOTALS:			1.18E-02		

Polycyclic Organic Matter Mixture

Polycyclic Organic Matter (POM)	#2 Diesel		
	EF	lb/hr	T/yr
Benzo(a)anthracene	6.22E-07	5.22E-06	6.74E-06
Benzo(b)fluoranthene	1.11E-06	9.32E-06	1.20E-05
Benzo(k)fluoranthene	2.18E-07	1.83E-06	2.36E-06
Benzo(a)pyrene	2.57E-07	2.16E-06	2.78E-06
Chrysene	1.52E-06	1.28E-05	1.65E-05
Dibenzo(a,h)anthracene	3.46E-07	2.91E-06	3.75E-06
Indeno(1,2,3-cd)pyrene	4.14E-07	3.48E-06	4.48E-06
TOTALS:	4.49E-06		4.86E-05

Emission Factor Information:

1) TAPs: Emission factor from AP-42 (10/96), Tables 3.4-3 and 3.4-4. Expressed in pounds of pollutant per MMBTU of fuel input.

2) POM: Emission factors for POM based on polyaromatic hydrocarbon mixture identified in IDAPA 58.01.01.586. Refer to Polycyclic Organic Matter Mixture table for calculation methodology.

Greenhouse Gases

GHG	#2 Diesel		
	EF	lb/hr	T/yr
CO2	165.0	1386.00	1786.9
Methane	0.008	0.07	0.09
CO2e		1387.43	1788.74

Emission Factor Information:

1) Carbon Dioxide: Emission factor from AP-42 (10/96), Table 3.4-1. EF expressed in pounds of CO2 per MMBTU of fuel input.

2) Methane: Emission factor from AP-42 (10/96), Table 3.4-1; assumed 9% of TOC to be methane, per footnote f). EF expressed in pounds of methane per MMBTU of fuel input.

3) CO2e: The sum of CO2 and methane expressed as carbon dioxide equivalent. A global warming potential of 21 was applied to methane.

Potential To Emit - HAPs

HAP	#2 Diesel		
	EF	lb/hr	T/yr
Acenaphthene[2]	4.68E-06	3.93E-05	0.0001
Acenaphthylene[2]	9.23E-06	7.75E-05	0.0001
Acetaldehyde	2.52E-05	2.12E-04	0.000
Acrolein	7.88E-06	6.62E-05	0.0001
Anthracene[2]	1.23E-06	1.03E-05	0.00001
Benzene	7.76E-04	6.52E-03	0.01
Benzo(a)anthracene[2]	6.22E-07	5.22E-06	0.00001
Benzo(a)pyrene[2]	2.57E-07	2.16E-06	0.00000
Benzo(b)fluoranthene[2]	1.11E-06	9.32E-06	0.00001
Benzo(g,h,i)perylene[2]	5.56E-07	4.67E-06	0.00001
Benzo(k)fluoranthene[2]	2.18E-07	1.83E-06	0.00000
Chrysene[2]	1.52E-06	1.28E-05	0.00002
Dibenzo(a,h)anthracene[2]	3.46E-07	2.91E-06	0.00000
Fluoranthene[2]	4.03E-06	3.39E-05	0.0000
Fluorene[2]	1.28E-05	1.08E-04	0.0001
Formaldehyde	7.89E-05	6.63E-04	0.001
Indeno(1,2,3-cd)pyrene[2]	4.14E-07	3.48E-06	0.00000
Naphthalene[2]	1.30E-04	1.09E-03	0.001
Phenanthrene[2]	4.08E-05	3.43E-04	0.000
POM (see below)		1.78E-03	0.0023
Pyrene[2]	3.71E-06	3.12E-05	0.0000
Toluene	2.81E-04	2.36E-03	0.00
Xylene	1.93E-04	1.62E-03	0.00
TOTALS:			0.02

Emission Factor Information:

1) HAPs: Emission factors from AP-42 (10/96), Tables 3.4-3 and 3.4-4. Expressed in pounds of pollutant per MMBTU of fuel input.

2) POM: Maximum PTE estimates for POM based on polycyclic organic matter mixture as defined by 1900 CAA Amendments. Compounds included in the mixture are denoted in the table. To avoid double counting, the total, maximum PTE estimates do not include POM (i.e., individual compounds are summed separately).

Emission Unit:	Night Generator
Manufacturer/Model:	Wacker, Model G-50, mfd in 2010 (equipped with John Deere PowerTech 4045D engine, 2007 Model year)
Fuel Type(s):	#2 Diesel
Rated Generator Capacity (kW):	38
Gross Engine Output (bhp):	67
Calculated Fuel Consumption (gal/hr):	3.35
Calculated Capacity (MMBTU/hr):	0.469
Daily Hours of Operation (hr/d)	24
Annual Hours of Operation (hr/yr):	8760

Control Equipment:	Tier 2 Certified Engine

Diesel (MMBTU/1000 gallons):	140	(AP-42 (9/85), App A)
Average BSFC (BTU/hp-hr):	7000	(AP-42 (10/96), Table 3.4-1, footnote e)

Potential To Emit - Criteria Pollutants

Criteria Pollutant	#2 Diesel			Max 24hr Ave	Max Annual Ave
	EF	lb/hr	T/yr	lb/hr	lb/hr
CO	1.17	0.55	2.41	0.55	0.55
CO2e		76.92	336.89	76.92	76.92
NOx	1.76	0.83	3.62	0.83	0.83
SO2	0.29	0.0004	0.002	0.0004	0.0004
PM	0.09	0.04	0.19	0.04	0.04
PM10	0.09	0.04	0.19	0.04	0.04
PM2.5	0.09	0.04	0.19	0.04	0.04
VOC	0.36	0.17	0.74	0.17	0.17
Lead					

Emission Factor Information:

1) Carbon Monoxide: Emission factor from 40 CFR 89.112, Table 1, for Tier 2 engine 37≤KW<75. Expressed in pounds of CO per MMBTU fuel input.

2) Carbon Dioxide Equivalent: Refer to Greenhouse Gases table for calculation methodology.

3) Nitrogen Oxides: Emission factor from 40 CFR 89.112, Table 1, for Tier 2 engine 37≤KW<75. Applied EF for NMHC+NOx, assuming 100% NOx. EF expressed in pounds of NOx per MMBTU fuel input.

4) Sulfur Dioxide: Emission factor from AP-42 (10/96), Table 3.3-1, for Diesel fuel. Per DEQ methodology, it was assumed that the AP-42 EF is based on use a max fuel sulfur content of 0.5%; a ratio has been applied to incorporate the vendor's specification of 0.0015% sulfur (i.e., 0.0015/0.5=0.003). EF expressed as pounds SO2 per MMBTU fuel input.

5) Particulate Matter: Emission factor from 40 CFR 89.112, Table 1, for Tier 2 engine 37<KW<75. Expressed in pounds of PM per MMBTU fuel input.

6) PM-10: Assumed all PM equal to PM-10. Expressed in pounds of PM-10 per MMBTU fuel input.

7) PM-2.5: Assumed all PM equal to PM-2.5. Expressed in pounds of PM-2.5 per MMBTU fuel input.

8) VOCs: Emission factor from AP-42 (10/96), Table 3.3-1. EF for TOC Exhaust and Crankcase assumed equivalent to VOC. Expressed in pounds of VOC per MMBTU fuel input.

9) Lead: No emission factor identified for lead emissions from large uncontrolled stationary diesel engines.

Potential To Emit - Non-Carcinogenic TAPs

Non-Carcinogen TAP	#2 Diesel			Max 24hr Ave	Max Annual Ave
	EF	lb/hr	T/yr	lb/hr	lb/hr
Acrolein	9.25E-05	4.34E-05	1.90E-04	4.34E-05	4.34E-05
Naphthalene	8.48E-05	3.98E-05	1.74E-04	3.98E-05	3.98E-05
Toluene	4.09E-04	1.92E-04	8.40E-04	1.92E-04	1.92E-04
Xylenes	2.85E-04	1.34E-04	5.85E-04	1.34E-04	1.34E-04
TOTALS:			1.79E-03		

Potential To Emit - Carcinogenic TAPs

Carcinogen TAP	#2 Diesel			Max 24hr Ave	Max Annual Ave
	EF	lb/hr	T/yr	lb/hr	lb/hr
Acenaphthene	1.42E-06	6.66E-07	2.92E-06	6.66E-07	6.66E-07
Acenaphthylene	5.06E-06	2.37E-06	1.04E-05	2.37E-06	2.37E-06
Acetaldehyde	7.67E-04	3.60E-04	1.58E-03	3.60E-04	3.60E-04
Anthracene	1.87E-06	8.77E-07	3.84E-06	8.77E-07	8.77E-07
Benzene	9.33E-04	4.38E-04	1.92E-03	4.38E-04	4.38E-04
Benzo(a)pyrene	1.88E-07	8.82E-08	3.86E-07	8.82E-08	8.82E-08
Benzo(g,h,i)perylene	4.89E-07	2.29E-07	1.00E-06	2.29E-07	2.29E-07
1,3-Butadiene	3.91E-05	1.83E-05	8.03E-05	1.83E-05	1.83E-05
Fluoranthene	7.61E-06	3.57E-06	1.56E-05	3.57E-06	3.57E-06
Fluorene	2.92E-05	1.37E-05	6.00E-05	1.37E-05	1.37E-05
Formaldehyde	1.18E-03	5.53E-04	2.42E-03	5.53E-04	5.53E-04
Naphthalene	8.48E-05	3.98E-05	1.74E-04	3.98E-05	3.98E-05
Phenanthrene	2.94E-05	1.38E-05	6.04E-05	1.38E-05	1.38E-05
POM (see below)	3.43E-06	1.61E-06	7.05E-06	1.61E-06	1.61E-06
Pyrene	4.78E-06	2.24E-06	9.82E-06	2.24E-06	2.24E-06
TOTALS:			6.34E-03		

Polycyclic Organic Matter Mixture

Polycyclic Organic Matter (POM)	#2 Diesel		
	EF	lb/hr	T/yr
Benzo(a)anthracene	1.68E-06	7.88E-07	3.45E-06
Benzo(b)fluoranthene	9.91E-08	4.65E-08	2.04E-07
Benzo(k)fluoranthene	1.55E-07	7.27E-08	3.18E-07
Benzo(a)pyrene	1.88E-07	8.82E-08	3.86E-07
Chrysene	3.53E-07	1.66E-07	7.25E-07
Dibenzo(a,h)anthracene	5.83E-07	2.73E-07	1.20E-06
Indeno(1,2,3-cd)pyrene	3.75E-07	1.76E-07	7.70E-07
TOTALS:	3.43E-06		7.05E-06

Emission Factor Information:

1) TAPs: Emission factor from AP-42 (10/96), Tables 3.3-2. Expressed in pounds of pollutant per MMBTU of fuel input.

2) POM: Emission factors for POM based on polyaromatic hydrocarbon mixture identified in IDAPA 58.01.01.586. Refer to Polycyclic Organic Matter Mixture table for calculation methodology.

Greenhouse Gases

GHG	#2 Diesel		
	EF	lb/hr	T/yr
CO2	164.0	76.92	336.9
CO2e		76.92	336.89

1) Carbon Dioxide: Emission factor from AP-42 (10/96), Table 3.3-1. EF expressed in pounds of CO2 per MMBTU of fuel input.

Potential To Emit - HAPs

HAP	#2 Diesel		
	EF	lb/hr	T/yr
Acenaphthene[2]	1.42E-06	6.66E-07	2.92E-06
Acenaphthylene[2]	5.06E-06	2.37E-06	1.04E-05
Acetaldehyde	7.67E-04	3.60E-04	1.58E-03
Acrolein	9.25E-05	4.34E-05	1.90E-04
Anthracene[2]	1.87E-06	8.77E-07	3.84E-06
Benzene	9.33E-04	4.38E-04	1.92E-03
Benzo(a)anthracene[2]	1.68E-06	7.88E-07	3.45E-06
Benzo(a)pyrene[2]	1.88E-07	8.82E-08	3.86E-07
Benzo(b)fluoranthene[2]	9.91E-08	4.65E-08	2.04E-07
Benzo(g,h,i)perylene[2]	4.89E-07	2.29E-07	1.00E-06
Benzo(k)fluoranthene[2]	1.55E-07	7.27E-08	3.18E-07
1,3-Butadiene	3.91E-05	1.83E-05	8.03E-05
Chrysene[2]	3.53E-07	1.66E-07	7.25E-07
Dibenzo(a,h)anthracene[2]	5.83E-07	2.73E-07	1.20E-06
Fluoranthene[2]	7.61E-06	3.57E-06	1.56E-05
Fluorene[2]	2.92E-05	1.37E-05	6.00E-05
Formaldehyde	1.18E-03	5.53E-04	2.42E-03
Indeno(1,2,3-cd)pyrene[2]	3.75E-07	1.76E-07	7.70E-07
Naphthalene[2]	8.48E-05	3.98E-05	1.74E-04
Phenanthrene[2]	2.94E-05	1.38E-05	6.04E-05
POM (see below)		7.88E-05	3.45E-04
Pyrene[2]	4.78E-06	2.24E-06	9.82E-06
Toluene	4.09E-04	1.92E-04	8.40E-04
Xylenes	2.85E-04	1.34E-04	5.85E-04
TOTALS:			0.01

1) HAPs: Emission factor from AP-42 (10/96), Tables 3.3-2. Expressed in pounds of pollutant per MMBTU of fuel input.

2) POM: Maximum PTE estimates for POM based on polycyclic organic matter mixture as defined by 1900 CAA Amendments. Compounds included in the mixture are denoted in the table. To avoid double counting, the total, maximum PTE estimates do not include POM (i.e., individual compounds are summed separately).

Emission Unit:	Storage Tanks		
Tank Number:	Tank 1	Tank 2	Tank 3
Material:	Asphalt	RFO	#2 Diesel
Capacity (gallons):	30,000	15,000	6,000

Production capacity (T/hr):	500
Daily Hours of Operation (hr/d):	12.5
Max Daily Production (T/d):	6,250
Annual Hours of Operation (hr/yr):	2,388
Max Annual Production (T/yr):	1193750

Tank 1 Throughput

Liquid asphalt in HMA (%):	4	(typical %, per DEQ methodology and AP-42, 11.1 (3/04))
Density of liquid asphalt (lb/gal):	8.69	(http://www.engineeringtoolbox.com/density-materials-d_1652.html)
Asphalt mass per HMA (lb/T):	9.21	
Annual asphalt throughput (gal/yr):	10989643.27	
TOC emission rate (lb/yr) for 300000 gallon annual throughput:	17.97	(Output from TANKS 4.0.9d (AP-42, 7.1), assuming a throughput of 300,000 gallons of asphalt per year. See computer file for details.)
Scaled annual TOC emission rate (lb/yr):	658.28	

Tank 2 Throughput

RFO heating value (MMBTU/1000 gallons):	140	(AP-42, App A)
Total plant capacity (MMBTU/hr):	135.5	(Drum dryer and asphalt tank heater)
Total plant capacity (gallons/hr):	967.9	
Annual RFO throughput (gal/yr):	2310758.93	
TOC emission rate (lb/yr) for 150000 gallon annual throughput:	0.10	(Output from TANKS 4.0.9d (AP-42, 7.1), assuming a throughput of 150,000 gallons of RFO per year. See computer file for details.)
Scaled annual TOC emission rate (lb/yr):	1.54	

Tank 3 Throughput

Diesel heating value (MMBTU/1000 gallons):	140	(AP-42, App A)
Total plant capacity (MMBTU/hr):	135.5	(Drum dryer and asphalt tank heater)
Total plant capacity (gallons/hr):	967.9	
Annual RFO throughput (gal/yr):	2310758.93	
TOC emission rate (lb/yr) for 60000 gallon annual throughput:	4.45	(Output from TANKS 4.0.9d (AP-42, 7.1), assuming a throughput of 60,000 gallons of RFO per year. See computer file for details.)
Scaled annual TOC emission rate (lb/yr):	171.38	

Potential To Emit - Criteria Pollutants

Criteria Pollutant	Tank 1		Tank 2		Tank 3		Total lb/hr	Total T/yr
	lb/hr	T/yr	lb/hr	T/yr	lb/hr	T/yr		
CO	0.027	0.032					0.03	0.03
CO2e	0.015	0.018					0.02	0.02
NOx							0.00	0.00
SO2							0.00	0.00
PM							0.00	0.00
PM10							0.00	0.00
PM2.5							0.00	0.00
VOC	0.276	0.329	0.0006	0.001	0.072	0.086	0.35	0.42
Lead							0.00	0.00

Emission Factor Information:

1) Carbon Monoxide: Emission factor from AP-42 (3/04), page 11.1-9 (i.e., 0.097). EF expressed as a fraction of TOC emissions. No CO emission factor information located for RFO or diesel; CO emissions expected to be very low from unheated tanks.

2) Carbon Dioxide Equivalent: Refer to Greenhouse Gases table for calculation methodology.

3) Nitrogen Oxides: No emission factor information identified; minimal NOx emissions expected from unheated storage tanks.

4) Sulfur Dioxide: No emission factor information identified; minimal SO2 emissions expected from unheated storage tanks.

5) Particulate Matter: No emission factor information identified; minimal PM emissions expected from unheated storage tanks.

6) PM-10: No emission factor information identified; minimal PM10 emissions expected from unheated storage tanks.

7) PM-2.5: No emission factor information identified; minimal PM2.5 emissions expected from unheated storage tanks.

8) VOCs: For Tank 1, onverted calculated TOC emissions rate to VOC per speciation profile in Table 11.1-16 (100% of TOC = VOC). For Tanks 2 and 3, assume all TOC is VOC.

9) Lead: No emission factor information identified; minimal lead emissions expected from unheated storage tanks.

Potential To Emit - Non-Carcinogenic TAPs

Non-Carcinogen TAP	Tank 1			Max 24hr Ave	Max Annual Ave
	EF	lb/hr	T/yr	lb/hr	lb/hr
Acetone	0.055	1.52E-04	1.81E-04	7.90E-05	4.13E-05
Bromomethane	0.0049	1.35E-05	1.61E-05	7.04E-06	3.68E-06
Carbon Disulfide	0.016	4.41E-05	5.27E-05	2.30E-05	1.20E-05
Chloroethane/Ethyl chloride	0.004	1.10E-05	1.32E-05	5.74E-06	3.01E-06
Chloromethane/Methyl chloride	0.023	6.34E-05	7.57E-05	3.30E-05	1.73E-05
Ethyl Benzene	0.038	1.05E-04	1.25E-04	5.46E-05	2.86E-05
Hexane	0.10	2.76E-04	3.29E-04	1.44E-04	7.51E-05
Methyl Ethyl Ketone	0.039	1.08E-04	1.28E-04	5.60E-05	2.93E-05
Styrene	0.0054	1.49E-05	1.78E-05	7.75E-06	4.06E-06
Toluene	0.062	1.71E-04	2.04E-04	8.90E-05	4.66E-05
Xylenes	0.257	7.09E-04	8.46E-04	3.69E-04	1.93E-04
TOTALS:			0.0020		

Potential To Emit - Carcinogenic TAPs

Carcinogen TAP	Tank 1			Max 24hr Ave	Max Annual Ave
	EF	lb/hr	T/yr	lb/hr	lb/hr
Benzene	0.032	8.82E-05	1.05E-04	4.60E-05	2.40E-05
Chloromethane/Methyl chloride	0.023	6.34E-05	7.57E-05	3.30E-05	1.73E-05
Formaldehyde	0.69	1.90E-03	2.27E-03	9.91E-04	5.19E-04
Methylene Chloride/Dichloromethane	0.00027	7.44E-07	8.89E-07	3.88E-07	2.03E-07
TOTALS:			0.0025		

Emission Factor Information:

1) TAPs: Based on speciation factors from AP-42 (3/04), Tables 11.1-16. Speciation factors are converted from percentages and multiplied by the scaled TOC emission rates from TANKS to derive the emissions rates in the PTE tables above. All EFs expressed as percentages TOC emission rates. No speciation factors located for RFO and/or diesel fuel; TAP emissions expected to be very low from unheated tanks.

Greenhouse Gases

GHG	Tank 1		
	EF	lb/hr	T/yr
Methane	0.26	0.0007	0.0009
CO2e		0.015	0.018

1) Methane: Based on speciation factor from AP-42 (3/04), Table 11.1-16. Speciation factor is converted from a percentage and then multiplied by the scaled TOC emission rates from TANKS to derive the emissions rates in the PTE tables above. All EFs expressed as percentages TOC emission rates. No speciation factors located for RFO and/or diesel fuel; GHG emissions expected to be very low from unheated tanks.

2) CO2e: A global warming potential of 21 was applied to methane to derive carbon dioxide equivalent estimates.

Potential To Emit - HAPs

HAP	Tank 1		
	EF	lb/hr	T/yr
Benzene	0.032	8.82E-05	1.05E-04
Bromomethane	0.0049	1.35E-05	1.61E-05
Carbon Disulfide	0.016	4.41E-05	5.27E-05
Chloroethane/Ethyl Chloride	0.004	1.10E-05	1.32E-05
Chloromethane/Methyl chloride	0.023	6.34E-05	7.57E-05
Ethyl Benzene	0.038	1.05E-04	1.25E-04
Formaldehyde	0.69	1.90E-03	2.27E-03
Hexane	0.10	2.76E-04	3.29E-04
Methyl Ethyl Ketone	0.039	1.08E-04	1.28E-04
Methylene Chloride/Dichloromethane	0.00027	7.44E-07	8.89E-07
Styrene	0.0054	1.49E-05	1.78E-05
Toluene	0.062	1.71E-04	2.04E-04
Xylene	0.257	7.09E-04	8.46E-04
TOTALS:			0.00

1) HAPs: Based on speciation factors from AP-42 (3/04), Tables 11.1-16. Speciation factors are converted from percentages and multiplied by the scaled TOC emission rates from TANKS to derive the emissions rates in the PTE tables above. All EFs expressed as percentages TOC emission rates. No speciation factors located for RFO and/or diesel fuel; HAP emissions expected to be very low from unheated tanks.

Emission Unit:	Silo Filling
Production capacity (T/hr):	500
Daily Hours of Operation (hr/d):	12.5
Max Daily Production (T/d):	6250
Annual Hours of Operation (hr/yr):	2387.5
Max Annual Production (T/yr):	1193750

Potential To Emit - Criteria Pollutants

Criteria Pollutant	Silo Filling			Max 24hr Ave	Max Annual Ave
	EF	lb/hr	T/yr	lb/hr	lb/hr
CO	1.18E-03	0.59	0.70	0.31	0.16
CO2e		0.33	0.40	0.17	0.09
NOx					
SO2					
PM	5.86E-04	0.29	0.35	0.15	0.08
PM10	5.86E-04	0.29	0.35	0.15	0.08
PM2.5	5.86E-04	0.29	0.35	0.15	0.08
VOC	1.22E-02	6.10	7.28	3.18	1.66
Lead					

Emission Factor Information:

1) Carbon Monoxide: Emission factor from AP-42 (3/04), Table 11.1-14, for Silo filling. Default values of -0.5 and 325°F were used for asphalt volatility (V) and HMA mix temperature (T). Expressed in pounds of CO per ton of HMA produced.

2) Carbon Dioxide Equivalent: Refer to Greenhouse Gases table for calculation methodology.

3) Nitrogen Oxides: No emission factor identified for NOx emissions from silo filling operations.

4) Sulfur Dioxide: No emission factor identified for SO2 emissions from silo filling operations.

5) Particulate Matter: Emission factor from AP-42 (3/04), Table 11.1-14, for Silo filling, Total PM. Default values of -0.5 and 325°F were used for asphalt volatility (V) and HMA mix temperature (T). Expressed in pounds of PM per ton of HMA produced.

6) PM-10: Emission factor from AP-42 (3/04), Table 11.1-14, for Silo filling, Total PM. Default values of -0.5 and 325°F were used for asphalt volatility (V) and HMA mix temperature (T). Per footnote b), all PM assumed to be PM10. Expressed in pounds of PM10 per ton of HMA produced.

7) PM-2.5: Emission factor from AP-42 (3/04), Table 11.1-14, for Silo filling, Total PM. Default values of -0.5 and 325°F were used for asphalt volatility (V) and HMA mix temperature (T). Per footnote b), all PM assumed to be PM2.5. Expressed in pounds of PM2.5 per ton of HMA produced.

8) VOCs: Emission factor from AP-42 (3/04), Table 11.1-14, for Silo filling, TOC. Default values of -0.5 and 325°F were used for asphalt volatility (V) and HMA mix temperature (T). Converted from TOC to VOC per speciation profile in Table 11.1-16 (100% of TOC = VOC). EF expressed in pounds of VOC per ton of HMA produced.

9) Lead: No emission factor identified for lead emissions from silo filling operations.

Emission Factor Estimates and PTE for Organic PM and TOC

Pollutant	EF (lbs/T HMA)	PTE	
		lb/hr	T/yr
Organic PM	2.54E-04	1.27E-01	1.52E-01
TOC	1.22E-02	6.10E+00	7.28E+00

Potential To Emit - Non-Carcinogenic TAPs

Non-Carcinogen TAP	Silo Filling			Max 24hr Ave	Max Annual Ave
	EF	lb/hr	T/yr	lb/hr	lb/hr
Acetone	0.055	3.36E-03	4.01E-03	1.75E-03	9.14E-04
Bromomethane/Methyl bromide	0.0049	2.99E-04	3.57E-04	1.56E-04	8.15E-05
Carbon Disulfide	0.016	9.76E-04	1.17E-03	5.08E-04	2.66E-04
Chloroethane/Ethyl chloride	0.004	2.44E-04	2.91E-04	1.27E-04	6.65E-05
Chloromethane/Methyl chloride	0.023	1.40E-03	1.67E-03	7.31E-04	3.82E-04
Ethyl Benzene	0.038	2.32E-03	2.77E-03	1.21E-03	6.32E-04
Hexane	0.10	6.10E-03	7.28E-03	3.18E-03	1.66E-03
Methyl Ethyl Ketone	0.039	2.38E-03	2.84E-03	1.24E-03	6.48E-04
Naphthalene	1.82	2.31E-03	2.76E-03	1.20E-03	6.30E-04
Phenol	0.0	0.00E+00	0.00E+00	0.00E+00	0.00E+00
Styrene	0.0054	3.29E-04	3.93E-04	1.72E-04	8.98E-05
Toluene	0.062	3.78E-03	4.51E-03	1.97E-03	1.03E-03
Xylenes (o-, m-, p-isomers)	0.257	1.57E-02	1.87E-02	8.17E-03	4.27E-03
TOTALS:			4.68E-02		

Potential To Emit - Carcinogenic TAPs

Carcinogen TAP	Silo Filling			Max 24hr Ave	Max Annual Ave
	EF	lb/hr	T/yr	lb/hr	lb/hr
Acenaphthene	0.47	5.97E-04	7.13E-04	3.11E-04	1.63E-04
Acenaphthylene	0.014	1.78E-05	2.12E-05	9.26E-06	4.85E-06
Anthracene	0.13	1.65E-04	1.97E-04	8.60E-05	4.50E-05
Benzene	0.032	1.95E-03	2.33E-03	1.02E-03	5.32E-04
Benzo(a)pyrene	0.0	0.00E+00	0.00E+00	0.00E+00	0.00E+00
Benzo(g,h,i)perylene	0.0	0.00E+00	0.00E+00	0.00E+00	0.00E+00
Benzo(e)pyrene	0.0095	1.21E-05	1.44E-05	6.28E-06	3.29E-06
Chloromethane/Methyl chloride	0.023	1.40E-03	1.67E-03	7.31E-04	3.82E-04
Fluoranthene	0.15	1.91E-04	2.27E-04	9.92E-05	5.19E-05
Fluorene	1.01	1.28E-03	1.53E-03	6.68E-04	3.50E-04
Formaldehyde	0.69	4.21E-02	5.02E-02	2.19E-02	1.15E-02
Methylene Chloride/Dichloromethane	0.00027	1.65E-05	1.97E-05	8.58E-06	4.49E-06
2-Methylnaphthalene	5.27	6.69E-03	7.99E-03	3.49E-03	1.82E-03
Naphthalene	1.82	2.31E-03	2.76E-03	1.20E-03	6.30E-04
Perylene	0.030	3.81E-05	4.55E-05	1.98E-05	1.04E-05
Phenanthrene	1.80	2.29E-03	2.73E-03	1.19E-03	6.23E-04
POM (see below)	2.66E-01	3.38E-04	4.03E-04	1.76E-04	9.21E-05
Pyrene	0.44	5.59E-04	6.67E-04	2.91E-04	1.52E-04
TOTALS:			7.16E-02		

Polycyclic Organic Matter Mixture

Polycyclic Organic Matter (POM)	Silo Filling		
	EF	lb/hr	T/yr
Benzo(a)anthracene	0.056	7.11E-05	8.49E-05
Benzo(b)fluoranthene	0.0	0.00E+00	0.00E+00
Benzo(k)fluoranthene	0.0	0.00E+00	0.00E+00
Benzo(a)pyrene	0.0	0.00E+00	0.00E+00
Chrysene	0.21	2.67E-04	3.18E-04
Dibenzo(a,h)anthracene	0.0	0.00E+00	0.00E+00
Indeno(1,2,3-cd)pyrene	0.0	0.00E+00	0.00E+00
TOTALS:	2.66E-01		4.03E-04

Emission Factor Information:

1) Organic PM and TOC Emission Factors: Emission factor from AP-42 (3/04), Table 11.1-14, for Silo filling. Default values of -0.5 and 325°F were used for asphalt volatility (V) and HMA mix temperature (T). Expressed in pounds of pollutant per ton of HMA produced. PTE based on max hourly and annual HMA production rates.

2) TAPs: Based on speciation factors from AP-42 (3/04), Tables 11.1-15 and 11.1-16. Speciation factors are converted from percentages and multiplied by theappropriate emission rate for Organic PM or TOC to derive the emissions rates in the PTE tables above. All EFs expressed as percentages of Organic PM or TOC emission rates.

3) POM: Emission factors for POM based on polyaromatic hydrocarbon mixture identified in IDAPA 58.01.01.586. Refer to Polycyclic Organic Matter Mixture table for calculation methodology.

Greenhouse Gases

GHG	Silo Filling		
	EF	lb/hr	T/yr
Methane	0.26	0.02	0.02
CO2e		0.33	0.40

1) Methane: Based on speciation factors from AP-42 (3/04), Table 11.1-16. Speciation factor is converted from a percentage and then multiplied by the TOC emission factor to derive the EF in the table. EF expressed in pounds of methane per ton of HMA.

2) CO2e: A global warming potential of 21 was applied to methane to derive carbon dioxide equivalent estimates.

Potential To Emit - HAPs

HAP	Silo Filling		
	EF	lb/hr	T/yr
Acenaphthene[2]	0.47	5.97E-04	0.0007
Acenaphthylene[2]	0.014	1.78E-05	0.0000
Anthracene[2]	0.13	1.65E-04	0.0002
Benzene	0.032	1.95E-03	0.0023
Benzo(a)anthracene[2]	0.056	7.11E-05	0.0001
Benzo(a)pyrene[2]	0.0	0.00E+00	0.0000
Benzo(b)fluoranthene[2]	0.0	0.00E+00	0.0000
Benzo(e)pyrene[2]	0.0095	1.21E-05	0.0000
Benzo(g,h,i)perylene[2]	0.0	0.00E+00	0.0000
Benzo(k)fluoranthene[2]	0.0	0.00E+00	0.0000
Bromomethane	0.0049	2.99E-04	0.0004
Carbon Disulfide	0.016	9.76E-04	0.0012
Chloroethane/Ethyl Chloride	0.004	2.44E-04	0.0003
Chloromethane/Methyl chloride	0.023	1.40E-03	0.0017
Chrysene[2]	0.21	2.67E-04	0.0003
Dibenzo(a,h)anthracene[2]	0.0	0.00E+00	0.0000
Ethyl Benzene	0.038	2.32E-03	0.0028
Fluoranthene[2]	0.15	1.91E-04	0.0002
Fluorene[2]	1.01	1.28E-03	0.0015
Formaldehyde	0.69	4.21E-02	0.0502
Hexane	0.10	6.10E-03	7.28E-03
Indeno(1,2,3-cd)pyrene[2]	0.0	0.00E+00	0.0000
Methyl Ethyl Ketone	3.90E-02	2.38E-03	0.0028
MTBE	0.0	0.00E+00	0.0000
Methylene Chloride	0.00027	1.65E-05	0.0000
2-Methylnaphthalene[2]	5.27	6.69E-03	0.0080
Naphthalene[2]	1.82	2.31E-03	0.0028
Perylene[2]	0.030	3.81E-05	0.0000
Phenanthrene[2]	1.80	2.29E-03	0.0027
Phenol	0.0	0.00E+00	0.0000
POM (see below)		1.45E-02	0.0173
Pyrene[2]	0.44	5.59E-04	0.0007
Styrene	0.0054	3.29E-04	0.0004
Toluene	0.062	3.78E-03	0.0045
Xylene	0.257	1.57E-02	0.0187
TOTALS:			0.11

1) HAPs: Based on speciation factors from AP-42 (3/04), Tables 11.1-15 and 11.1-16. Speciation factors are multiplied by the appropriate emission rate for Organic PM or TOC to derive the emissions rates in the PTE tables above. All EFs expressed as percentages of Organic PM or TOC emission rates.

2) POM: Maximum PTE estimates for POM based on polycyclic organic matter mixture as defined by 1900 CAA Amendments. Compounds included in the mixture are denoted in the table. To avoid double counting, the total, maximum PTE estimates do not include POM (i.e., individual compounds are summed separately).

Emission Unit:	Silo Loadout
Production capacity (T/hr):	500
Daily Hours of Operation (hr/d):	12.5
Max Daily Production (T/d):	6250
Annual Hours of Operation (hr/yr):	2387.5
Max Annual Production (T/yr):	1193750

Potential To Emit - Criteria Pollutants

Criteria Pollutant	Silo Loadout			Max 24hr Ave	Max Annual Ave
	EF	lb/hr	T/yr	lb/hr	lb/hr
CO	1.35E-03	0.68	0.81	0.35	0.18
CO2e		2.84	3.39	1.48	0.77
NOx					
SO2					
PM	5.22E-04	0.26	0.31	0.14	0.07
PM10	5.22E-04	0.26	0.31	0.14	0.07
PM2.5	5.22E-04	0.26	0.31	0.14	0.07
VOC	3.91E-03	1.96	2.33	1.02	0.53
Lead					

Emission Factor Information:

1) Carbon Monoxide: Emission factor from AP-42 (3/04), Table 11.1-14, for Loadout. Default values of -0.5 and 325°F were used for asphalt volatility (V) and HMA mix temperature (T). Expressed in pounds of CO per ton of HMA produced.

2) Carbon Dioxide Equivalent: Refer to Greenhouse Gases table for calculation methodology.

3) Nitrogen Oxides: No emission factor identified for NOx emissions from silo filling operations.

4) Sulfur Dioxide: No emission factor identified for SO2 emissions from silo filling operations.

5) Particulate Matter: Emission factor from AP-42 (3/04), Table 11.1-14, for Loadout, Total PM. Default values of -0.5 and 325°F were used for asphalt volatility (V) and HMA mix temperature (T). Expressed in pounds of PM per ton of HMA produced.

6) PM-10: Emission factor from AP-42 (3/04), Table 11.1-14, for Loadout, Total PM. Default values of -0.5 and 325°F were used for asphalt volatility (V) and HMA mix temperature (T). Per footnote b), all PM assumed to be PM10. Expressed in pounds of PM10 per ton of HMA produced.

7) PM-2.5: Emission factor from AP-42 (3/04), Table 11.1-14, for Loadout, Total PM. Default values of -0.5 and 325°F were used for asphalt volatility (V) and HMA mix temperature (T). Per footnote b), all PM assumed to be PM2.5. Expressed in pounds of PM2.5 per ton of HMA produced.

8) VOCs: Emission factor from AP-42 (3/04), Table 11.1-14, for Loadout, TOC. Default values of -0.5 and 325°F were used for asphalt volatility (V) and HMA mix temperature (T). Converted from TOC to VOC per speciation profile in Table 11.1-16 (94% of TOC = VOC). EF expressed in pounds of VOC per ton of HMA produced.

9) Lead: No emission factor identified for lead emissions from silo filling operations.

Emission Factor Estimates and PTE for Organic PM and TOC

Pollutant	EF (lbs/T HMA)	PTE	
		lb/hr	T/yr
Organic PM	3.41E-04	1.71E-01	2.04E-01
TOC	4.16E-03	2.08E+00	2.48E+00

Potential To Emit - Non-Carcinogenic TAPs

Non-Carcinogen TAP	Silo Loadout			Max 24hr Ave	Max Annual Ave
	EF	lb/hr	T/yr	lb/hr	lb/hr
Acetone	0.046	9.57E-04	1.14E-03	4.98E-04	2.61E-04
Bromomethane/Methyl bromide	0.0096	2.00E-04	2.38E-04	1.04E-04	5.44E-05
Carbon Disulfide	0.013	2.70E-04	3.23E-04	1.41E-04	7.37E-05
Chloroethane/Ethyl Chloride	0.00021	4.37E-06	5.21E-06	2.28E-06	1.19E-06
Chloromethane/Methyl chloride	0.015	3.12E-04	3.72E-04	1.63E-04	8.50E-05
Cumene	0.11	2.29E-03	2.73E-03	1.19E-03	6.24E-04
Ethyl Benzene	0.28	5.82E-03	6.95E-03	3.03E-03	1.59E-03
Hexane	0.15	3.12E-03	3.72E-03	1.63E-03	8.50E-04
Methyl Ethyl Ketone	0.049	1.02E-03	1.22E-03	5.31E-04	2.78E-04
Naphthalene	1.25	2.13E-03	2.54E-03	1.11E-03	5.81E-04
Phenol	1.18	2.01E-03	2.40E-03	1.05E-03	5.48E-04
Styrene	0.0073	1.52E-04	1.81E-04	7.91E-05	4.14E-05
Toluene	0.21	4.37E-03	5.21E-03	2.28E-03	1.19E-03
1,1,1-Trichloroethane/Methyl Chlorofor	0.00	0.00E+00	0.00E+00	0.00E+00	0.00E+00
Xylenes (o-, m-, p-isomers)	0.49	1.02E-02	1.22E-02	5.31E-03	2.78E-03
TOTALS:			3.92E-02		

Potential To Emit - Carcinogenic TAPs

Carcinogen TAP	Silo Loadout			Max 24hr Ave	Max Annual Ave
	EF	lb/hr	T/yr	lb/hr	lb/hr
Acenaphthene	0.26	4.43E-04	5.29E-04	2.31E-04	1.21E-04
Acenaphthylene	0.028	4.77E-05	5.70E-05	2.49E-05	1.30E-05
Anthracene	0.070	1.19E-04	1.42E-04	6.22E-05	3.25E-05
Benzene	0.052	1.08E-03	1.29E-03	5.63E-04	2.95E-04
Benzo(a)pyrene	0.0023	3.92E-06	4.68E-06	2.04E-06	1.07E-06
Benzo(g,h,i)perylene	0.0019	3.24E-06	3.87E-06	1.69E-06	8.83E-07
Benzo(e)pyrene	0.0078	1.33E-05	1.59E-05	6.93E-06	3.62E-06
Chloromethane/Methyl chloride	0.015	3.12E-04	3.72E-04	1.63E-04	8.50E-05
Fluoranthene	0.050	8.53E-05	1.02E-04	4.44E-05	2.32E-05
Fluorene	0.77	1.31E-03	1.57E-03	6.84E-04	3.58E-04
Formaldehyde	0.088	1.83E-03	2.19E-03	9.53E-04	4.99E-04
Methylene Chloride/Dichloromethane	0.0	0.00E+00	0.00E+00	0.00E+00	0.00E+00
2-Methylnaphthalene	2.38	4.06E-03	4.84E-03	2.11E-03	1.11E-03
Naphthalene	1.25	2.13E-03	2.54E-03	1.11E-03	5.81E-04
Perylene	0.022	3.75E-05	4.48E-05	1.95E-05	1.02E-05
Phenanthrene	0.81	1.38E-03	1.65E-03	7.19E-04	3.76E-04
POM (see below)	1.35E-01	2.30E-04	2.75E-04	1.20E-04	6.27E-05
Pyrene	0.15	2.56E-04	3.05E-04	1.33E-04	6.97E-05
Tetrachloroethene/Tetrachloroethylene	0.0077	1.60E-04	1.91E-04	8.34E-05	4.37E-05
Trichloroethene/Trichloroethylene	0.0	0.00E+00	0.00E+00	0.00E+00	0.00E+00
TOTALS:			1.61E-02		

Polycyclic Organic Matter Mixture

Polycyclic Organic Matter (POM)	Silo Loadout		
	EF	lb/hr	T/yr
Benzo(a)anthracene	0.019	3.24E-05	3.87E-05
Benzo(b)fluoranthene	0.0076	1.30E-05	1.55E-05
Benzo(k)fluoranthene	0.0022	3.75E-06	4.48E-06
Benzo(a)pyrene	0.0023	3.92E-06	4.68E-06
Chrysene	0.103	1.76E-04	2.10E-04
Dibenzo(a,h)anthracene	0.00037	6.31E-07	7.53E-07
Indeno(1,2,3-cd)pyrene	0.00047	8.01E-07	9.57E-07
TOTALS:	1.35E-01		2.75E-04

Emission Factor Information:

1) Organic PM and TOC Emission Factors: Emission factor from AP-42 (3/04), Table 11.1-14, for Loadout. Default values of -0.5 and 325°F were used for asphalt volatility (V) and HMA mix temperature (T). Expressed in pounds of pollutant per ton of HMA produced. PTE based on max hourly and annual HMA production rates.

2) TAPs: Based on speciation factors from AP-42 (3/04), Tables 11.1-15 and 11.1-16. Speciation factors are converted from percentages and multiplied by theappropriate emission rate for Organic PM or TOC to derive the emissions rates in the PTE tables above. All EFs expressed as percentages of Organic PM or TOC emission rates.

3) POM: Emission factors for POM based on polyaromatic hydrocarbon mixture identified in IDAPA 58.01.01.586. Refer to Polycyclic Organic Matter Mixture table for calculation methodology.

Greenhouse Gases

GHG	Silo Loadout		
	EF	lb/hr	T/yr
Methane	6.50	0.14	0.16
CO2e		2.84	3.39

1) Methane: Based on speciation factors from AP-42 (3/04), Table 11.1-16. Speciation factor is converted from a percentage and then multiplied by the TOC emission factor to derive the EF in the table. EF expressed in pounds of methane per ton of HMA.

2) CO2e: A global warming potential of 21 was applied to methane to derive carbon dioxide equivalent estimates.

Potential To Emit - HAPs

HAP	Silo Loadout		
	EF	lb/hr	T/yr
Acenaphthene[2]	0.26	4.43E-04	0.0005
Acenaphthylene[2]	0.028	4.77E-05	0.0001
Anthracene[2]	0.070	1.19E-04	0.0001
Benzene	0.052	1.08E-03	0.0013
Benzo(a)anthracene[2]	0.019	3.24E-05	0.0000
Benzo(a)pyrene[2]	0.0023	3.92E-06	0.0000
Benzo(b)fluoranthene[2]	0.0076	1.30E-05	0.0000
Benzo(e)pyrene[2]	0.0078	1.33E-05	0.0000
Benzo(g,h,i)perylene[2]	0.0019	3.24E-06	0.0000
Benzo(k)fluoranthene[2]	0.0022	3.75E-06	0.0000
Bromomethane	0.0096	2.00E-04	0.0002
Carbon Disulfide	0.013	2.70E-04	0.0003
Chloroethane/Ethyl Chloride	0.00021	4.37E-06	0.0000
Chloromethane/Methyl chloride	0.015	3.12E-04	0.0004
Chrysene[2]	0.103	1.76E-04	0.0002
Cumene	0.11	2.29E-03	0.0027
Dibenzo(a,h)anthracene[2]	0.00037	6.31E-07	0.0000
Ethyl Benzene	0.28	5.82E-03	0.0070
Fluoranthene[2]	0.050	8.53E-05	0.0001
Fluorene[2]	0.77	1.31E-03	0.0016
Formaldehyde	0.088	1.83E-03	0.0022
Hexane	0.15	3.12E-03	0.0037
Indeno(1,2,3-cd)pyrene[2]	0.00047	8.01E-07	0.0000
Methyl Chloroform	0.00	0.00E+00	0.0000
Methyl Ethyl Ketone	0.049	1.02E-03	0.0012
MTBE	0.0	0.00E+00	0.0000
Methylene Chloride	0.0	0.00E+00	0.0000
2-Methylnaphthalene[2]	2.38	4.06E-03	0.0048
Naphthalene[2]	1.25	2.13E-03	0.0025
Perylene[2]	0.022	3.75E-05	0.0000
Phenanthrene[2]	0.81	1.38E-03	0.0016
Phenol	1.18	2.01E-03	0.0024
POM (see below)		1.01E-02	0.0121
Pyrene[2]	0.15	2.56E-04	0.0003
Styrene	0.0073	1.52E-04	0.0002
Tetrachloroethene/Tetrachloroethylene	0.0077	1.60E-04	0.0002
Toluene	0.21	4.37E-03	0.0052
Trichloroethene/Trichloroethylene	0.0	0.00E+00	0.0000
Xylene	0.49	1.02E-02	0.0122
TOTALS:			0.05

1) HAPs: Based on speciation factors from AP-42 (3/04), Tables 11.1-15 and 11.1-16. Speciation factors are converted from percentages and multiplied by theappropriate emission rate for Organic PM or TOC to derive the emissions rates in the PTE tables above. All EFs expressed as percentages of Organic PM or TOC emission rates.

2) POM: Maximum PTE estimates for POM based on polycyclic organic matter mixture as defined by 1900 CAA Amendments. Compounds included in the mixture are denoted in the table. To avoid double counting, the total, maximum PTE estimates do not include POM (i.e., individual compounds are summed separately).

Emission Unit:	Aggregate Handling and Screening
Aggregrate in HMA (%):	96 (Typical %, per DEQ methodology and AP-42, 11.1 (3/04))
Production Capacity (T/hr):	480
Daily Hours of Operation (hr/d):	12.5
Max Daily Production (T/d):	6000
Annual Hours of Operation (hr/yr):	2387.5
Max Annual Production (T/yr):	1146000

1. AGGREGATE DROPS FROM FRONT END LOADER

Total tansfer points:	1	From drop to cold bins (stockpile will already be onsite during HMA operations).

Potential To Emit - Criteria Pollutants

Criteria Pollutant	EF	lb/hr	T/yr	Max 24hr Ave lb/hr	Max Annual Ave lb/hr
PM	0.003305	1.59	1.89	0.83	0.43
PM10	0.000765	0.37	0.44	0.19	0.10
PM2.5	0.000116	0.06	0.07	0.03	0.02

Emission Factor Information:

1) Particulate Matter: Emission factor from AP-42, 13.2.4 (11/06), Equation 1: $EF = k (0.0032) \times (U/5)^{1.3} / (M/2)^{1.4}$
Where: k (particle size multiplier) = 0.74 for PM, U (mean wind speed) = 10 mph, and M (moisture content) = 5%. Per DEQ methodology, 10 mph assumed to be base case for mean wind speed. Moisture typically ranges from 3-7% (STAPPA-ALAPCO-EPA, Emission Inventory Improvement Program, Volume II, Chapter 3, Preferred and Alternative Methods for Estimating Air from Hot Mix Asphalt Plants, Final Report, July 1996); 5% is typical for Western Construction HMA plants, per owner. EF expressed in pounds of PM per ton of aggregate.

2) PM-10: Emission factor from AP-42, 13.2.4 (11/06), Equation 1: $EF = k (0.0032) \times (U/5)^{1.3} / (M/2)^{1.4}$
Where: k (particle size multiplier) = 0.35 for PM, U (mean wind speed) = 10 mph, and M (moisture content) = 5%. Per DEQ methodology, 10 mph assumed to be base case for mean wind speed. Moisture typically ranges from 3-7% (STAPPA-ALAPCO-EPA, Emission Inventory Improvement Program, Volume II, Chapter 3, Preferred and Alternative Methods for Estimating Air from Hot Mix Asphalt Plants, Final Report, July 1996); 5% is typical for Western Construction HMA plants, per owner. EF expressed in pounds of PM10 per ton of aggregate.

3) PM-2.5: Emission factor from AP-42, 13.2.4 (11/06), Equation 1: $EF = k (0.0032) \times (U/5)^{1.3} / (M/2)^{1.4}$
Where: k (particle size multiplier) = 0.053 for PM, U (mean wind speed) = 10 mph, and M (moisture content) = 5%. Per DEQ methodology, 10 mph assumed to be base case for mean wind speed. Moisture typically ranges from 3-7% (STAPPA-ALAPCO-EPA, Emission Inventory Improvement Program, Volume II, Chapter 3, Preferred and Alternative Methods for Estimating Air from Hot Mix Asphalt Plants, Final Report, July 1996); 5% is typical for Western Construction HMA plants, per owner. EF expressed in pounds of PM2.5 per ton of aggregate.

4) Other Pollutants: No emissions other than particulate matter are associated with aggregate handling.

2. AGGREGATE DROPS FROM CONVEYERS

Total tansfer points:	4	[1) bins to conveyor, 2) conveyor to screen, 3) screen to conveyor, and 4) conveyor to drum]

Potential To Emit - Criteria Pollutants

Criteria Pollutant	EF	lb/hr	T/yr	Max 24hr Ave lb/hr	Max Annual Ave lb/hr
PM	0.00014	0.27	0.32	0.14	0.07
PM10	0.000046	0.09	0.11	0.05	0.02
PM2.5	0.000013	0.02	0.03	0.01	0.01

Emission Factor Information:

1) Particulate Matter: Emission factor from AP-42 (8/04), Table 11.19.2-2, for Total PM, Conveyor Transfer Point (controlled). Controls for emissions are assumed to be in place, per the requirements of IDAPA 58.01.01.808.01. EF expressed in pounds of PM per ton of aggregate.

2) PM-10: Emission factor from AP-42 (8/04), Table 11.19.2-2, for Total PM-10, Conveyor Transfer Point (controlled). Controls for emissions are assumed to be in place, per the requirements of IDAPA 58.01.01.808.01. EF expressed in pounds of PM-10 per ton of aggregate.

3) PM-2.5: Emission factor from AP-42 (8/04), Table 11.19.2-2, for Total PM-2.5, Conveyor Transfer Point (controlled). Controls for emissions are assumed to be in place, per the requirements of IDAPA 58.01.01.808.01. EF expressed in pounds of PM-2.5 per ton of aggregate.

3. AGGREGATE SCREENING

Screens:	1

Potential To Emit - Criteria Pollutants

Criteria Pollutant	EF	lb/hr	T/yr	Max 24hr Ave lb/hr	Max Annual Ave lb/hr
PM	0.0022	1.06	1.26	0.55	0.29
PM10	0.00074	0.36	0.42	0.19	0.10
PM2.5	0.000050	0.02	0.03	0.01	0.01

Emission Factor Information:

1) Particulate Matter: Emission factor from AP-42 (8/04), Table 11.19.2-2, for Total PM, Screening (controlled). Controls for emissions are assumed to be in place, per the requirements of IDAPA 58.01.01.808.01. EF expressed in pounds of PM per ton of aggregate.

2) PM-10: Emission factor from AP-42 (8/04), Table 11.19.2-2, for Total PM-10, Screening (controlled). Controls for emissions are assumed to be in place, per the requirements of IDAPA 58.01.01.808.01. EF expressed in pounds of PM-10 per ton of aggregate.

3) PM-2.5: Emission factor from AP-42 (8/04), Table 11.19.2-2, for Total PM-2.5, Screening (controlled). Controls for emissions are assumed to be in place, per the requirements of IDAPA 58.01.01.808.01. EF expressed in pounds of PM-2.5 per ton of aggregate.

Potential To Emit - Criteria Pollutants

Criteria Pollutant	HMA Drum Dryer		Asphalt Heater		Operations Generator		Night Generator		Storage Tanks		Silo Filling		Loadout		TOTAL	
	lb/hr	T/yr	lb/hr	T/yr	lb/hr	T/yr	lb/hr	T/yr	lb/hr	T/yr	lb/hr	T/yr	lb/hr	T/yr	lb/hr	T/yr
CO	65.59	78.30	0.04	0.18	6.90	8.90	0.55	2.41	0.03	0.03	0.00	0.00	0.68	0.81	73.79	90.63
CO2e	16912.22	20339.08	100.30	439.33	1387.43	1788.74	76.92	336.89	0.02	0.02	0.00	0.00	2.84	3.39	18479.73	22907.45
NOx	27.50	32.83	0.07	0.31	12.60	16.24	0.83	3.62	0.00	0.00	0.00	0.00	0.00	0.00	41.00	53.00
SO2	29.00	34.62	0.19	0.84	0.01	0.02	0.00	0.00	0.00	0.00	0.00	0.00	0.00	0.00	29.20	35.47
PM	16.79	20.05	0.20	0.88	0.39	0.51	0.04	0.19	0.00	0.00	0.00	0.00	0.26	0.31	17.69	21.94
PM10	11.79	14.08	0.17	0.76	0.39	0.51	0.04	0.19	0.00	0.00	0.00	0.00	0.26	0.31	12.67	15.85
PM2.5	5.79	6.91	0.01	0.03	0.47	0.60	0.04	0.19	0.00	0.00	0.00	0.00	0.26	0.31	6.57	8.04
VOC	22.10	26.38	0.01	0.02	2.56	3.30	0.17	0.74	0.35	0.42	0.00	0.00	1.96	2.33	27.14	33.20
Lead	0.01	0.01	0.00	0.01	0.00	0.00	0.00	0.00	0.00	0.00	0.00	0.00	0.00	0.00	0.01	0.02

Potential To Emit - Non-carcinogen Toxic Air Pollutants

Non-carcinogen TAP	HMA Drum Dryer		Asphalt Heater		Operations Generator		Night Generator		Asphalt Storage Tank		Silo Filling		Loadout		TOTAL	
	lb/hr	T/yr	lb/hr	T/yr	lb/hr	T/yr	lb/hr	T/yr	lb/hr	T/yr	lb/hr	T/yr	lb/hr	T/yr	lb/hr	T/yr
Acetone	4.18E-01	4.99E-01							1.52E-04	1.81E-04	0.00E+00	0.00E+00	9.57E-04	1.14E-03	4.19E-01	5.01E-01
Acrolein	1.30E-02	1.55E-02			6.62E-05	8.53E-05	4.34E-05	1.90E-04							1.31E-02	1.58E-02
Antimony	9.00E-05	1.07E-04	1.61E-05	7.04E-05											1.06E-04	1.78E-04
Barium	2.90E-03	3.46E-03	2.16E-06	9.45E-06											2.90E-03	3.47E-03
Bromomethane	2.99E-04	3.57E-04							1.35E-05	1.61E-05	0.00E+00	0.00E+00	2.00E-04	2.38E-04	5.12E-04	6.11E-04
Carbon Disulfide	9.76E-04	1.17E-03							4.41E-05	5.27E-05	0.00E+00	0.00E+00	2.70E-04	3.23E-04	1.29E-03	1.54E-03
Chloroethane/Ethyl chloride	2.44E-04	2.91E-04							1.10E-05	1.32E-05	0.00E+00	0.00E+00	4.37E-06	5.21E-06	2.59E-04	3.10E-04
Chloromethane/Methyl chloride	1.40E-03	1.67E-03							6.34E-05	7.57E-05	0.00E+00	0.00E+00	3.12E-04	3.72E-04	1.78E-03	2.12E-03
Chromium	2.75E-03	3.28E-03	6.43E-04	2.82E-03											3.39E-03	6.10E-03
Cobalt	1.30E-05	1.55E-05	1.86E-05	8.13E-05											3.16E-05	9.69E-05
Copper	1.55E-03	1.85E-03	3.00E-06	1.31E-05											1.55E-03	1.86E-03
Crotonaldehyde	4.30E-02	5.13E-02													4.30E-02	5.13E-02
Cumene													2.29E-03	2.73E-03	2.29E-03	2.73E-03
Dichlorobenzene			5.88E-07	2.58E-06											5.88E-07	2.58E-06
Ethyl Benzene	1.22E-01	1.46E-01							1.05E-04	1.25E-04	0.00E+00	0.00E+00	5.82E-03	6.95E-03	1.28E-01	1.53E-01
Heptane	4.70E+00	5.61E+00													4.70E+00	5.61E+00
Hexane	4.66E-01	5.56E-01	8.82E-04	3.86E-03					2.76E-04	3.29E-04	0.00E+00	0.00E+00	3.12E-03	3.72E-03	4.70E-01	5.64E-01
Hydrochloric Acid	1.05E-01	1.25E-01	2.36E-02	1.03E-01											1.29E-01	2.29E-01
Manganese	3.85E-03	4.60E-03	1.79E-04	7.82E-04											4.03E-03	5.38E-03
Mercury	1.30E-03	1.55E-03	1.50E-06	6.57E-06											1.30E-03	1.56E-03
Methyl Chloroform	2.40E-02	2.87E-02													2.40E-02	2.87E-02
Methyl Ethyl Ketone	1.24E-02	1.48E-02							1.08E-04	1.28E-04	0.00E+00	0.00E+00	1.02E-03	1.22E-03	1.35E-02	1.61E-02
Molybdenum			5.39E-07	2.36E-06											5.39E-07	2.36E-06
Naphthalene	3.27E-01	3.91E-01	6.07E-05	2.66E-04	1.09E-03	1.41E-03	3.98E-05	1.74E-04			0.00E+00	0.00E+00	2.13E-03	2.54E-03	3.31E-01	3.95E-01
n-Pentane	1.05E-01	1.25E-01	1.27E-03	5.58E-03											1.06E-01	1.31E-01
Phenol	0.00E+00	0.00E+00	1.00E-07	4.38E-07							0.00E+00	0.00E+00	2.01E-03	2.40E-03	2.01E-03	2.40E-03
Phosphorus	1.40E-02	1.67E-02													1.40E-02	1.67E-02
Propionaldehyde	6.50E-02	7.76E-02													6.50E-02	7.76E-02
Quinone	8.00E-02	9.55E-02													8.00E-02	9.55E-02
Selenium	1.75E-04	2.09E-04	7.50E-06	3.29E-05											1.83E-04	2.42E-04
Silver	2.40E-04	2.87E-04													2.40E-04	2.87E-04
Styrene	3.29E-04	3.93E-04							1.49E-05	1.78E-05	0.00E+00	0.00E+00	1.52E-04	1.81E-04	4.96E-04	5.92E-04
Thallium	2.05E-06	2.45E-06													2.05E-06	2.45E-06
Toluene	1.45E+00	1.74E+00	1.67E-06	7.30E-06	2.36E-03	3.04E-03	1.92E-04	8.40E-04	1.71E-04	2.04E-04	0.00E+00	0.00E+00	4.37E-03	5.21E-03	1.46E+00	1.74E+00
Valeraldehyde	3.35E-02	4.00E-02													3.35E-02	4.00E-02
Vanadium			1.13E-06	4.94E-06											1.13E-06	4.94E-06
Xylenes	1.16E-01	1.38E-01			1.62E-03	2.09E-03	1.34E-04	5.85E-04	7.09E-04	8.46E-04	0.00E+00	0.00E+00	1.02E-02	1.22E-02	1.28E-01	1.54E-01
Zinc	3.05E-02	3.64E-02	1.42E-05	6.23E-05											3.05E-02	3.65E-02

Potential To Emit - Carcinogen Toxic Air Pollutants

Carcinogen TAP	HMA Drum Dryer		Asphalt Heater		Operations Generator		Night Generator		Asphalt Storage Tank		Silo Filling		Loadout		TOTAL	
	lb/hr	T/yr	lb/hr	T/yr	lb/hr	T/yr	lb/hr	T/yr	lb/hr	T/yr	lb/hr	T/yr	lb/hr	T/yr	lb/hr	T/yr
Acenaphthene	1.30E-03	1.55E-03	1.89E-06	8.29E-06	3.93E-05	5.07E-05	6.66E-07	2.92E-06			0.00E+00	0.00E+00	4.43E-04	5.29E-04	1.78E-03	2.14E-03
Acenaphthylene	1.10E-02	1.32E-02	7.14E-07	3.13E-06	7.75E-05	1.00E-04	2.37E-06	1.04E-05			0.00E+00	0.00E+00	4.77E-05	5.70E-05	1.11E-02	1.33E-02
Acetaldehyde	6.50E-01	7.76E-01			2.12E-04	2.73E-04	3.60E-04	1.58E-03							6.51E-01	7.78E-01
Anthracene	1.72E-03	2.05E-03	6.43E-07	2.82E-06	1.03E-05	1.33E-05	8.77E-07	3.84E-06			0.00E+00	0.00E+00	1.19E-04	1.42E-04	1.85E-03	2.21E-03
Arsenic	2.80E-04	3.34E-04	2.14E-04	9.39E-04											4.94E-04	1.27E-03
Benzene	1.97E-01	2.35E-01	1.03E-05	4.51E-06	6.52E-03	8.40E-03	4.38E-04	1.92E-03	8.82E-05	1.05E-04	0.00E+00	0.00E+00	1.08E-03	1.29E-03	2.05E-01	2.47E-01
Benzo(a)pyrene	4.90E-06	5.85E-06	1.43E-05	6.26E-05	2.16E-06	2.78E-06	8.82E-08	3.86E-07			0.00E+00	0.00E+00	3.92E-06	4.68E-06	2.54E-05	7.63E-05
Benzo(g,h,i)perylene	2.00E-05	2.39E-05	5.88E-10	2.58E-09	4.67E-06	6.02E-06	2.29E-07	1.00E-06			0.00E+00	0.00E+00	3.24E-06	3.87E-06	2.81E-05	3.48E-05
Benzo(e)pyrene	6.71E-05	8.01E-05									0.00E+00	0.00E+00	1.33E-05	1.59E-05	8.04E-05	9.59E-05
Beryllium	0.00E+00	0.00E+00	6.43E-06	2.82E-05											6.43E-06	2.82E-05
Bis(2-ethylhexyl)phthalate			7.86E-06	3.44E-05											7.86E-06	3.44E-05
1,3-Butadiene							1.83E-05	8.03E-05							1.83E-05	8.03E-05
Cadmium	2.05E-04	2.45E-04	4.29E-05	1.88E-04											2.48E-04	4.32E-04
Chloromethane/Methyl chloride	1.40E-03	1.67E-03							6.34E-05	7.57E-05	0.00E+00	0.00E+00	3.12E-04	3.72E-04	1.78E-03	2.12E-03
Hexavalent Chromium	2.25E-04	2.69E-04													2.25E-04	2.69E-04
Total Dioxin/Furans	6.00E-08	7.16E-08	8.21E-10	3.60E-09											6.08E-08	7.52E-08
Fluoranthene	4.96E-04	5.92E-04	1.57E-07	6.88E-07	3.39E-05	4.36E-05	3.57E-06	1.56E-05			0.00E+00	0.00E+00	8.53E-05	1.02E-04	6.18E-04	7.53E-04
Fluorene	6.78E-03	8.10E-03	1.14E-07	5.01E-07	1.08E-04	1.39E-04	1.37E-05	6.00E-05			0.00E+00	0.00E+00	1.31E-03	1.57E-03	8.22E-03	9.86E-03
Formaldehyde	1.59E+00	1.90E+00	2.18E-04	9.54E-04	6.63E-04	8.54E-04	5.53E-04	2.42E-03	1.90E-03	2.27E-03	0.00E+00	0.00E+00	1.83E-03	2.19E-03	1.60E+00	1.91E+00
3-Methylchloranthrene			8.82E-10	3.86E-09											8.82E-10	3.86E-09
Methylene Chloride/Dichloromethane	1.65E-05	1.97E-05							7.44E-07	8.89E-07	0.00E+00	0.00E+00	0.00E+00	0.00E+00	1.72E-05	2.05E-05
2-Methylnaphthalene	9.17E-02	1.09E-01	1.18E-08	5.15E-08							0.00E+00	0.00E+00	4.06E-03	4.84E-03	9.58E-02	1.14E-01
Naphthalene	3.27E-01	3.91E-01	6.07E-05	2.66E-04	1.09E-03	1.41E-03	3.98E-05	1.74E-04			0.00E+00	0.00E+00	2.13E-03	2.54E-03	3.31E-01	3.95E-01
Nickel	3.15E-02	3.76E-02	5.71E-04	2.50E-03											3.21E-02	4.01E-02
Perylene	4.25E-05	5.07E-05									0.00E+00	0.00E+00	3.75E-05	4.48E-05	8.00E-05	9.55E-05
Phenanthrene	1.38E-02	1.65E-02	1.75E-05	7.67E-05	3.43E-04	4.42E-04	1.38E-05	6.04E-05			0.00E+00	0.00E+00	1.38E-03	1.65E-03	1.55E-02	1.87E-02
POM	6.12E-04	7.30E-04	4.29E-05	1.88E-04	3.77E-05	4.86E-05	1.61E-06	7.05E-06			0.00E+00	0.00E+00	2.30E-04	2.75E-04	9.24E-04	1.25E-03
Pyrene	2.06E-03	2.46E-03	1.14E-07	5.01E-07	3.12E-05	4.02E-05	2.24E-06	9.82E-06			0.00E+00	0.00E+00	2.56E-04	3.05E-04	2.35E-03	2.81E-03
2,3,7,8-TCDD	1.05E-10	1.25E-10													1.05E-10	1.25E-10
Tetrachloroethene/ Tetrachloroethylene													1.60E-04	1.91E-04	1.60E-04	1.91E-04
Trichloroethene/ Trichloroethylene													0.00E+00	0.00E+00	0.00E+00	0.00E+00

Potential To Emit - CAA Hazardous Air Pollutants

HAP	HMA Drum Dryer		Asphalt Heater		Operations Generator		Night Generator		Asphalt Storage Tank		Silo Filling[2]		Loadout		TOTAL	
	lb/hr	T/yr	lb/hr	T/yr	lb/hr	T/yr	lb/hr	T/yr	lb/hr	T/yr	lb/hr	T/yr	lb/hr	T/yr	lb/hr	T/yr
Acenaphthene	7.00E-04	8.36E-04	1.89E-06	8.29E-06	3.93E-05	5.07E-05	6.66E-07	2.92E-06			5.97E-04	7.13E-04	4.43E-04	5.29E-04	0.0018	0.0021
Acenaphthylene	1.10E-02	1.31E-02	7.14E-07	3.13E-06	7.75E-05	1.00E-04	2.37E-06	1.04E-05			1.78E-05	2.12E-05	4.77E-05	5.70E-05	0.0111	0.0133
Acetaldehyde	6.50E-01	7.76E-01	0.00E+00	0.00E+00	2.12E-04	2.73E-04	3.60E-04	1.58E-03							0.6506	0.7778
Acrolein	1.30E-02	1.55E-02	0.00E+00	0.00E+00	6.62E-05	8.53E-05	4.34E-05	1.90E-04							0.0131	0.0158
Antimony	9.00E-05	1.07E-04	1.61E-05	7.04E-05											0.0001	0.0002
Anthracene	1.55E-03	1.85E-03	6.43E-07	2.82E-06	1.03E-05	1.33E-05	8.77E-07	3.84E-06			1.65E-04	1.97E-04	1.19E-04	1.42E-04	0.0018	0.0022
Arsenic	2.80E-04	3.34E-04	2.14E-04	9.39E-04											0.0005	0.0013
Benzene	1.95E-01	2.33E-01	1.03E-06	4.51E-06	6.52E-03	8.40E-03	4.38E-04	1.92E-03	8.82E-05	1.05E-04	1.95E-03	2.33E-03	1.08E-03	1.29E-03	0.2051	0.2468
Benzo(a)anthracene	1.05E-04	1.25E-04	1.43E-05	6.26E-05	5.22E-06	6.74E-06	7.88E-07	3.45E-06			7.11E-05	8.49E-05	3.24E-05	3.87E-05	0.0002	0.0003
Benzo(a)pyrene	4.90E-06	5.85E-06	1.43E-05	6.26E-05	2.16E-06	2.78E-06	8.82E-08	3.86E-07			0.00E+00	0.00E+00	3.92E-06	4.68E-06	0.0000	0.0001
Benzo(b)fluoranthene	5.00E-05	5.97E-05	3.57E-07	1.56E-06	9.32E-06	1.20E-05	4.65E-08	2.04E-07			0.00E+00	0.00E+00	1.30E-05	1.55E-05	0.0001	0.0001
Benzo(e)pyrene	5.50E-05	6.57E-05	0.00E+00	0.00E+00							1.21E-05	1.44E-05	1.33E-05	1.59E-05	0.0001	0.0001
Benzo(g,h,i)perylene	2.00E-05	2.39E-05	5.88E-10	2.58E-09	4.67E-06	6.02E-06	2.29E-07	1.00E-06			0.00E+00	0.00E+00	3.24E-06	3.87E-06	0.0000	0.0000
Benzo(k)fluoranthene	2.05E-05	2.45E-05	8.82E-10	3.86E-09	1.83E-06	2.36E-06	7.27E-08	3.18E-07			0.00E+00	0.00E+00	3.75E-06	4.48E-06	0.0000	0.0000
Beryllium	0.00E+00	0.00E+00	6.43E-06	2.82E-05											0.0000	0.0000
Bis(2-ethylhexyl)phthalate			7.88E-06	3.44E-05											0.0000	0.0000
Bromomethane									1.35E-05	1.61E-05	2.99E-04	3.57E-04	2.00E-04	2.38E-04	0.0005	0.0006
1,3-Butadiene	0.00E+00	0.00E+00	0.00E+00	0.00E+00			1.83E-05	8.03E-05							0.0000	0.0001
Cadmium	2.05E-04	2.45E-04	4.29E-05	1.88E-04											0.0002	0.0004
Carbon Disulfide	0.00E+00	0.00E+00	0.00E+00	0.00E+00					4.41E-05	5.27E-05	9.76E-04	1.17E-03	2.70E-04	3.23E-04	0.0013	0.0015
Chloroethane/Ethyl Chloride									1.10E-05	1.32E-05	2.44E-04	2.91E-04	4.37E-06	5.21E-06	0.0003	0.0003
Chloromethane/Methyl chloride									6.34E-05	7.57E-05	1.40E-03	1.67E-03	3.12E-04	3.72E-04	0.0018	0.0021
Chromium	2.75E-03	3.28E-03	6.43E-04	2.82E-03											0.0054	0.0061
Hexavalent Chromium	2.25E-04	2.69E-04	0.00E+00	0.00E+00											0.0002	0.0003
Chrysene	9.00E-05	1.07E-04	1.43E-05	6.26E-05	1.28E-05	1.65E-05	1.66E-07	7.25E-07			2.67E-04	3.18E-04	1.76E-04	2.10E-04	0.0006	0.0007
Cobalt	1.30E-05	1.55E-05	1.86E-05	8.13E-05											0.0000	0.0001
Cumene	0.00E+00	0.00E+00	0.00E+00	0.00E+00									2.29E-03	2.73E-03	0.0023	0.0027
Dibenzo(a,h)anthracene	0.00E+00	0.00E+00	5.88E-10	2.58E-09	2.91E-06	3.75E-06	2.73E-07	1.20E-06			0.00E+00	0.00E+00	6.31E-07	7.53E-07	0.0000	0.0000
Dibutylphthalate			1.21E-07	5.32E-07											0.0000	0.0000
Dichlorobenzene	0.00E+00	0.00E+00	5.88E-07	2.58E-06											0.0000	0.0000
Ethyl Benzene	1.20E-01	1.43E-01	0.00E+00	0.00E+00					1.05E-04	1.25E-04	2.32E-03	2.77E-03	5.82E-03	6.95E-03	0.1282	0.1531
Fluoranthene	3.05E-04	3.64E-04	1.57E-07	6.88E-07	3.39E-05	4.36E-05	3.57E-06	1.56E-05			1.91E-04	2.27E-04	8.53E-05	1.02E-04	0.0006	0.0008
Fluorene	5.50E-03	6.57E-03	1.14E-07	5.01E-07	1.08E-04	1.39E-04	1.37E-05	6.00E-05			1.28E-03	1.53E-03	1.31E-03	1.57E-03	0.0082	0.0099
Formaldehyde	1.55E+00	1.85E+00	2.18E-04	9.54E-04	6.63E-04	8.54E-04	5.53E-04	2.42E-03	1.90E-03	2.27E-03	4.21E-02	5.02E-02	1.83E-03	2.19E-03	1.5973	1.9092
Hexane	4.60E-01	5.49E-01	8.82E-04	3.86E-03					2.76E-04	3.29E-04	6.10E-03	7.28E-03	3.12E-03	3.72E-03	0.4704	0.5643
HCl	1.05E-01	1.25E-01	2.36E-02	1.03E-01											0.1286	0.2286
Indeno(1,2,3-cd)pyrene	3.50E-06	4.18E-06	8.82E-10	3.86E-09	3.48E-06	4.48E-06	1.76E-07	7.70E-07			0.00E+00	0.00E+00	8.01E-07	9.57E-07	0.0000	0.0000
Lead	7.50E-03	8.95E-03	1.79E-03	7.82E-03											0.0093	0.0168
Manganese	3.85E-03	4.60E-03	1.79E-04	7.82E-04											0.0040	0.0054
Mercury	1.30E-03	1.55E-03	1.50E-06	6.57E-06											0.0013	0.0016
Methyl Chloroform	2.40E-02	2.87E-02	0.00E+00	0.00E+00									0.00E+00	0.00E+00	0.0240	0.0287
Methyl Ethyl Ketone	1.00E-02	1.19E-02	0.00E+00	0.00E+00					1.08E-04	1.28E-04	2.38E-03	2.84E-03	1.02E-03	1.22E-03	0.0135	0.0161
Methylene Chloride/Dichloromethane									7.44E-07	8.89E-07	1.65E-05	1.97E-05			0.0000	0.0000
2-Methylnaphthalene	8.50E-02	1.01E-01	8.82E-10	3.86E-09							6.69E-03	7.99E-03	4.06E-03	4.84E-03	0.0958	0.1143
3-Methylchloranthrene	0.00E+00	0.00E+00	1.18E-08	5.15E-08											0.0000	0.0000
Naphthalene	3.25E-01	3.88E-01	6.07E-05	2.66E-04	1.09E-03	1.41E-03	3.98E-05	1.74E-04			2.31E-03	2.76E-03	2.13E-03	2.54E-03	0.3306	0.3951
Nickel	3.15E-02	3.76E-02	5.71E-04	2.50E-03											0.0321	0.0401
Pentane	0.00E+00	0.00E+00	1.27E-03	5.58E-03											0.0013	0.0056
Perylene	4.40E-06	5.25E-06	0.00E+00	0.00E+00							3.81E-05	4.55E-05	3.75E-05	4.48E-05	0.0001	0.0001
Phenanthrene	1.15E-02	1.37E-02	1.75E-05	7.67E-05	3.43E-04	4.42E-04	1.38E-05	6.04E-05			2.29E-03	2.73E-03	1.38E-03	1.65E-03	0.0155	0.0187
Phenol			1.00E-07	4.38E-07							0.00E+00	0.00E+00	2.01E-03	2.40E-03	0.0020	0.0024
Phosphorus	1.40E-02	1.67E-02	0.00E+00	0.00E+00											0.0140	0.0167
POM	4.42E-01	5.28E-01	1.25E-04	5.48E-04	1.78E-03	2.29E-03	7.88E-05	3.45E-04			1.45E-02	1.73E-02	1.01E-02	1.21E-02	0.4690	0.5607
Propionaldehyde	6.50E-02	7.76E-02	0.00E+00	0.00E+00											0.0650	0.0776
Pyrene	1.50E-03	1.79E-03	1.14E-07	5.01E-07	3.12E-05	4.02E-05	2.24E-06	9.82E-06			5.59E-04	6.67E-04	2.56E-04	3.05E-04	0.0023	0.0028
Quinone	8.00E-02	9.55E-02													0.0800	0.0955
Selenium	1.75E-04	2.09E-04	7.50E-06	3.29E-05											0.0002	0.0002
Styrene	0.00E+00	0.00E+00	0.00E+00	0.00E+00					1.49E-05	1.78E-05	3.29E-04	3.93E-04	1.52E-04	1.81E-04	0.0005	0.0006
2,3,7,8-TCDD	1.05E-10	1.25E-10	0.00E+00	0.00E+00											0.0000	0.0000
Tetrachloroethene/ Tetrachloroethylene													1.60E-04	1.91E-04	0.0002	0.0002
Toluene	1.45E+00	1.73E+00	1.67E-06	7.30E-06	2.36E-03	3.04E-03	1.92E-04	8.40E-04	1.71E-04	2.04E-04	3.78E-03	4.51E-03	4.37E-03	5.21E-03	1.4609	1.7448
Total PCDD/PCDF	6.00E-08	7.16E-08	8.21E-10	3.60E-09											0.0000	0.0000
Trichloroethene/ Trichloroethylene			0.00E+00	0.00E+00									0.00E+00	0.00E+00	0.0000	0.0000
Xylene	1.00E-01	1.19E-01	0.00E+00	0.00E+00	1.62E-03	2.09E-03	1.34E-04	5.85E-04	7.09E-04	8.46E-04	1.57E-02	1.87E-02	1.02E-02	1.22E-02	0.1283	0.1538
TOTALS:															5.51	6.68

1) POM & Total PCDD/PCDF: Maximum PTE estimates for POM based on polycyclic organic matter mixture as defined by 1900 CAA Amendments. Refer to Individual unit emission estimates for compounds included in the mixture. To avoid double counting, the total, maximum PTE estimates do not include POM (i.e., Individual compounds are summed separately) or 2, 3, 7, 8-TCDD (included in Total PCDD/PCDF).

2) Note that Silo Filling emissions are actually routed through the Drum Dryer/Baghouse. Presented seperately here for HAP threshold assessment purposes only.

APPENDIX 4

Uncontrolled Emissions Inventory at 500 T/hr Production

Emission Unit:	Drum Dryer
Manufacturer /Model:	Gencor, Model 400 Portable Insulated Ultradrum with Ultra II-
Production capacity (T/hr):	500
Burner capacity (MMBTU/hr):	135
Fuel Type(s):	RFO, #2 Diesel, natural gas, or propane
Daily Hours of Operation (hr/d)	24
Max Daily Production (T/d)	12000
Annual Hours of Operation (hr/yr):	8760
Max Annual Production (T/yr):	4380000

Control Equipment:	Gencor Baghouse, Model CFP-182

RFO and Diesel (MMBTU/1000 gallons):	140	(AP-42, App A)
Nat. gas (BTU/scf):	1020	(AP-42, Table 1.4-1, footnote (a))
Propane (MMBTU/1000 gallons):	91.5	(AP-42, Table 1.5-1, footnote (a))
Propane (BTU/scf):	2504	(http://www.engineeringtoolbox.com/fuel-gases-combustion-values-d_510.html)

Potential To Emit - Criteria Pollutants

Criteria Pollutant	RFO			#2 Diesel			Nat. Gas			Propane			Max lb/hr	Max T/yr	Max 24hr Ave lb/hr	Max Annual Ave lb/hr
	EF	lb/hr	T/yr	EF	lb/hr	T/yr	EF	lb/hr	T/yr	EF	lb/hr	T/yr				
CO	0.13	65.00	284.70	0.13	65.00	284.70	0.13	65.000	284.70	0.13	65.000	284.70	65.00	284.70	65.00	65.00
CO2e		16703.72	73162.30		16703.72	73162.30		16716.26	73217.24		16911.89	74624.86	16911.89	74624.86	16911.89	16911.89
NOx	0.055	27.50	120.45	0.055	27.50	120.45	0.026	13.000	56.94	0.039	19.500	85.41	27.50	120.45	27.50	27.50
SO2	0.058	29.00	127.02	0.011	5.50	24.09	0.0034	1.700	7.45	0.0034	1.700	7.45	29.00	127.02	29.00	29.00
PM	28	14000.00	61320.00	28	14000.00	61320.00	28	14000.000	61320.00	28	14000.000	61320.00	14000.00	61320.00	14000.00	14000.00
PM10	6.5	3250.00	14235.00	6.5	3250.00	14235.00	6.5	3250.000	14235.00	6.5	3250.000	14235.00	3250.00	14235.00	3250.00	3250.00
PM2.5	28.275	14137.50	61922.25	28.275	14137.50	61922.25	28.275	14137.500	61922.25	28.275	14137.500	61922.25	14137.50	61922.25	14137.50	14137.50
VOC	0.032	16.00	70.08	0.032	16.00	70.08	0.032	16.000	70.08	0.032	16.000	70.08	16.00	70.08	16.00	16.00
Lead	0.000015	0.01	0.03	0.00054	0.27	1.18	6.2E-07	0.00	0.00	6.2E-07	0.00	0.00	0.27	1.18	0.27	0.27

Emission Factor Information:

1) Carbon Monoxide: Emission factors from AP-42 (3/04), Table 11.1-7. For propane, the EF for natural gas combustion was applied. EFs are expressed in pounds of CO per ton of HMA produced.

2) Carbon Dioxide Equivalent: Refer to Greenhouse Gases table for calculation methodology.

3) Nitrogen Oxides: Emission factors from AP-42 (3/04), Table 11.1-7. For propane, the NOx EF for natural gas has been multiplied by a factor of 1.5, per footnote (a) from Table 1.5-1, Emission Factors for LPG Combustion (i.e., "The NOx emission factors have been multiplied by a factor of 1.5, which is the approximate ratio of propane/butane NOx emissions to natural gas Nox emissions."). EFs expressed in pounds of NOx per ton of HMA produced.

4) Sulfur Dioxide: Emission factors from AP-42 (3/04), Table 11.1-7. For propane, the EF for natural gas combustion was applied. EFs are expressed in pounds of SOx per ton of HMA produced.

5) Particulate Matter: Emission factors based on AP-42 (3/04), Table 11.1-3, for uncontrolled and Total PM. EFs are expressed in pounds of PM-10 per ton of HMA produced.

6) PM-10: Emission factors based on AP-42 (3/04), Table 11.1-3, for uncontrolled and Total PM-10. EFs are expressed in pounds of PM-10 per ton of HMA produced.

7) PM-2.5: Emission factors based on AP-42 (3/04), Tables 11.1-3 and 11.1-4, for uncontrolled emissions. EFs are expressed in pounds of PM-2.5 per ton of HMA produced.

8) VOC: Emission factors from AP-42 (3/04), Table 11.1-8. For propane, the EF for natural gas combustion was applied. EFs are expressed in pounds of VOC per ton of HMA produced.

9) Lead: Emission factors from AP-42 (3/04), Table 11.1-12. Diesel EF is uncontrolled; all other EFs use fabric filter (uncontrolled EFs could not be located. EFs are expressed in pounds of Pb per ton of HMA produced.

Potential To Emit - Non-Carcinogenic TAPs

Non-Carcinogen TAP	RFO			#2 Diesel			Nat. Gas			Propane			Max lb/hr	Max T/yr	Max 24hr Ave lb/hr	Max Annual Ave lb/hr
	EF	lb/hr	T/yr	EF	lb/hr	T/yr	EF	lb/hr	T/yr	EF	lb/hr	T/yr				
Acetone	8.3E-04	4.2E-01	1.8E+00		0.0E+00	0.0E+00		0.0E+00	0.0E+00		0.0E+00	0.0E+00	4.15E-01	1.82E+00	4.15E-01	4.15E-01
Acrolein	2.6E-05	1.3E-02	5.7E-02		0.0E+00	0.0E+00		0.0E+00	0.0E+00		0.0E+00	0.0E+00	1.30E-02	5.69E-02	1.30E-02	1.30E-02
Antimony	1.8E-07	9.0E-05	3.9E-04	1.8E-07	9.0E-05	3.9E-04	1.8E-07	9.0E-05	3.9E-04	1.8E-07	9.0E-05	3.9E-04	9.00E-05	3.94E-04	9.00E-05	9.00E-05
Barium	5.8E-67	2.9E-64	1.3E-63	2.5E-04	1.3E-01	5.5E-01	5.8E-06	2.9E-03	1.3E-02	5.8E-06	2.9E-03	1.3E-02	1.25E-01	5.48E-01	1.25E-01	1.25E-01
Chromium	5.5E-06	2.8E-03	1.2E-02	2.4E-05	1.2E-02	5.3E-02	5.5E-06	2.8E-03	1.2E-02	5.5E-06	2.8E-03	1.2E-02	1.20E-02	5.26E-02	1.20E-02	1.20E-02
Cobalt	2.6E-08	1.3E-05	5.7E-05	1.5E-05	7.5E-03	3.3E-02	2.6E-08	1.3E-05	5.7E-05	2.6E-08	1.3E-05	5.7E-05	7.5E-03	3.3E-02	7.5E-03	7.5E-03
Copper	3.1E-06	1.6E-03	6.8E-03	1.7E-04	8.5E-02	3.7E-01	3.1E-06	1.6E-03	6.8E-03	3.1E-06	1.6E-03	6.8E-03	8.5E-02	3.7E-01	8.5E-02	8.5E-02
Crotonaldehyde	8.6E-05	4.3E-02	1.9E-01		0.0E+00	0.0E+00		0.0E+00	0.0E+00		0.0E+00	0.0E+00	4.30E-02	1.88E-01	4.30E-02	4.30E-02
Ethyl Benzene	2.4E-04	1.2E-01	5.3E-01	2.4E-04	1.2E-01	5.3E-01	2.4E-04	1.2E-01	5.3E-01	2.4E-04	1.2E-01	5.3E-01	1.20E-01	5.26E-01	1.20E-01	1.20E-01
Heptane	9.4E-03	4.7E+00	2.1E+01	9.4E-03	4.7E+00	2.1E+01	9.4E-03	4.7E+00	2.1E+01	9.4E-03	4.7E+00	2.1E+01	4.70E+00	2.06E+01	4.70E+00	4.70E+00
Hexane	9.2E-04	4.6E-01	2.0E+00	9.2E-04	4.6E-01	2.0E+00	9.2E-04	4.6E-01	2.0E+00	9.2E-04	4.6E-01	2.0E+00	4.60E-01	2.01E+00	4.60E-01	4.60E-01
Hydrochloric Acid	2.1E-04	1.1E-01	4.6E-01		0.0E+00	0.0E+00		0.0E+00	0.0E+00		0.0E+00	0.0E+00	1.1E-01	4.6E-01	1.1E-01	1.1E-01
Manganese	7.7E-06	3.9E-03	1.7E-02	6.5E-04	3.3E-01	1.4E+00	7.7E-06	3.9E-03	1.7E-02	7.7E-06	3.9E-03	1.7E-02	3.3E-01	1.4E+00	3.3E-01	3.3E-01
Mercury	2.6E-06	1.3E-03	5.7E-03	2.6E-06	1.3E-03	5.7E-03	2.4E-07	1.2E-04	5.3E-04	2.4E-07	1.2E-04	5.3E-04	1.3E-03	5.7E-03	1.3E-03	1.3E-03
Methyl Chloroform	4.8E-05	2.4E-02	1.1E-01	4.8E-05	2.4E-02	1.1E-01	4.8E-05	2.4E-02	1.1E-01	4.8E-05	2.4E-02	1.1E-01	2.40E-02	1.05E-01	2.40E-02	2.40E-02
Methyl Ethyl Ketone	2.0E-05	1.0E-02	4.4E-02		0.0E+00	0.0E+00		0.0E+00	0.0E+00		0.0E+00	0.0E+00	1.00E-02	4.38E-02	1.00E-02	1.00E-02
Naphthalene	6.5E-04	3.3E-01	1.4E+00	6.5E-04	3.3E-01	1.4E+00	9.0E-05	4.5E-02	2.0E-01	9.0E-05	4.5E-02	2.0E-01	3.25E-01	1.42E+00	3.25E-01	3.25E-01
n-Pentane	2.1E-04	1.1E-01	4.6E-01	2.1E-04	1.1E-01	4.6E-01	2.1E-04	1.1E-01	4.6E-01	2.1E-04	1.1E-01	4.6E-01	1.05E-01	4.60E-01	1.05E-01	1.05E-01
Phosphorus	2.8E-05	1.4E-02	6.1E-02	1.2E-03	6.0E-01	2.6E+00	2.8E-05	1.4E-02	6.1E-02	2.8E-05	1.4E-02	6.1E-02	6.00E-01	2.63E+00	6.00E-01	6.00E-01
Propionaldehyde	1.3E-04	6.5E-02	2.8E-01		0.0E+00	0.0E+00		0.0E+00	0.0E+00		0.0E+00	0.0E+00	6.50E-02	2.85E-01	6.50E-02	6.50E-02
Quinone	1.6E-04	8.0E-02	3.5E-01		0.0E+00	0.0E+00		0.0E+00	0.0E+00		0.0E+00	0.0E+00	8.00E-02	3.50E-01	8.00E-02	8.00E-02
Selenium	3.5E-07	1.8E-04	7.7E-04	2.4E-06	1.2E-03	5.3E-03	3.5E-07	1.8E-04	7.7E-04	3.5E-07	1.8E-04	7.7E-04	1.20E-03	5.26E-03	1.20E-03	1.20E-03
Silver	4.8E-07	2.4E-04	1.1E-03	4.8E-07	2.4E-04	1.1E-03	4.8E-07	2.4E-04	1.1E-03	4.8E-07	2.4E-04	1.1E-03	2.40E-04	1.05E-03	2.40E-04	2.40E-04
Thallium	4.1E-09	2.1E-06	9.0E-06	2.2E-06	1.1E-03	4.8E-03	4.1E-09	2.1E-06	9.0E-06	4.1E-09	2.1E-06	9.0E-06	1.10E-03	4.82E-03	1.10E-03	1.10E-03
Toluene	2.9E-03	1.5E+00	6.4E+00	2.9E-03	1.5E+00	6.4E+00	1.5E-04	7.5E-02	3.3E-01	1.5E-04	7.5E-02	3.3E-01	1.45E+00	6.35E+00	1.45E+00	1.45E+00
Valeraldehyde	6.7E-05	3.4E-02	1.5E-01		0.0E+00	0.0E+00		0.0E+00	0.0E+00		0.0E+00	0.0E+00	3.35E-02	1.47E-01	3.35E-02	3.35E-02
Xylene	2.0E-04	1.0E-01	4.4E-01	2.0E-04	1.0E-01	4.4E-01	2.0E-04	1.0E-01	4.4E-01	2.0E-04	1.0E-01	4.4E-01	1.00E-01	4.38E-01	1.00E-01	1.00E-01
Zinc	6.1E-05	3.1E-02	1.3E-01	1.8E-04	9.0E-02	3.9E-01	6.1E-05	3.1E-02	1.3E-01	6.1E-05	3.1E-02	1.3E-01	9.00E-02	3.94E-01	9.00E-02	9.00E-02
TOTALS:			35.491			37.372			24.901			24.901	9.297	40.721		

Potential To Emit - Carcinogenic TAPs

Carcinogen TAP	RFO			#2 Diesel			Nat. Gas			Propane			Max lb/hr	Max T/yr	Max 24hr Ave lb/hr	Max Annual Ave lb/hr
	EF	lb/hr	T/yr	EF	lb/hr	T/yr	EF	lb/hr	T/yr	EF	lb/hr	T/yr				
Acenaphthene	1.4E-06	7.0E-04	3.1E-03	1.40E-06	7.0E-04	3.1E-03	1.40E-06	7.0E-04	3.1E-03	1.40E-06	7.0E-04	3.1E-03	7.00E-04	3.07E-03	7.00E-04	7.00E-04
Acenaphthylene	2.2E-05	1.1E-02	4.8E-02	2.20E-05	1.1E-02	4.8E-02	8.60E-06	4.3E-03	1.9E-02	8.60E-06	4.3E-03	1.9E-02	1.10E-02	4.82E-02	1.10E-02	1.10E-02
Acetaldehyde	1.3E-03	6.5E-01	2.8E+00		0.0E+00	0.0E+00		0.0E+00	0.0E+00		0.0E+00	0.0E+00	6.50E-01	2.85E+00	6.50E-01	6.50E-01
Anthracene	3.1E-06	1.6E-03	6.8E-03	3.1E-06	1.6E-03	6.8E-03	2.2E-07	1.1E-04	4.8E-04	2.2E-07	1.1E-04	4.8E-04	1.55E-03	6.79E-03	1.55E-03	1.55E-03
Arsenic	5.6E-07	2.8E-04	1.2E-03	1.3E-06	6.5E-04	2.8E-03	5.6E-07	2.8E-04	1.2E-03	5.6E-07	2.8E-04	1.2E-03	6.50E-04	2.85E-03	6.50E-04	6.50E-04
Benzene	3.9E-04	2.0E-01	8.5E-01	3.9E-04	2.0E-01	8.5E-01	3.9E-04	2.0E-01	8.5E-01	3.9E-04	2.0E-01	8.5E-01	1.95E-01	8.54E-01	1.95E-01	1.95E-01
Benzo(a)pyrene	9.80E-09	4.9E-06	2.1E-05	9.80E-09	4.9E-06	2.1E-05	9.80E-09	4.9E-06	2.1E-05	9.80E-09	4.9E-06	2.1E-05	4.90E-06	2.15E-05	4.90E-06	4.90E-06
Benzo(g,h,i)perylene	4.0E-08	2.0E-05	8.8E-05	4.0E-08	2.0E-05	8.8E-05	4.0E-08	2.0E-05	8.8E-05	4.0E-08	2.0E-05	8.8E-05	2.00E-05	8.76E-05	2.00E-05	2.00E-05
Benzo(e)pyrene	1.1E-07	5.5E-05	2.4E-04	1.1E-07	5.5E-05	2.4E-04	1.1E-07	5.5E-05	2.4E-04	1.1E-07	5.5E-05	2.4E-04	5.50E-05	2.41E-04	5.50E-05	5.50E-05
Beryllium	0.0E+00	0.0E+00	0.0E+00	0.0E+00	0.0E+00	0.0E+00	0.0E+00	0.0E+00	0.0E+00	0.0E+00	0.0E+00	0.0E+00	0.00E+00	0.00E+00	0.00E+00	0.00E+00
Cadmium	4.1E-07	2.1E-04	9.0E-04	4.2E-06	2.1E-03	9.2E-03	4.1E-07	2.1E-04	9.0E-04	4.1E-07	2.1E-04	9.0E-04	2.10E-03	9.20E-03	2.10E-03	2.10E-03
Hexavalent Chromium	4.5E-07	2.3E-04	9.9E-04	4.5E-07	2.3E-04	9.9E-04	4.5E-07	2.3E-04	9.9E-04	4.5E-07	2.3E-04	9.9E-04	2.25E-04	9.86E-04	2.25E-04	2.25E-04
Dioxin/Furans (see below)													1.50E-06	6.57E-06		2.11E-09
Fluoranthene	6.1E-07	3.1E-04	1.3E-03	6.1E-07	3.1E-04	1.3E-03	6.1E-07	3.1E-04	1.3E-03	6.1E-07	3.1E-04	1.3E-03	3.05E-04	1.34E-03	3.05E-04	3.05E-04
Fluorene	1.1E-05	5.5E-03	2.4E-02	1.1E-05	5.5E-03	2.4E-02	3.8E-06	1.9E-03	8.3E-03	3.8E-06	1.9E-03	8.3E-03	5.50E-03	2.41E-02	5.50E-03	5.50E-03
Formaldehyde	3.1E-03	1.6E+00	6.8E+00	3.1E-03	1.6E+00	6.8E+00	3.1E-03	1.6E+00	6.8E+00	3.1E-03	1.6E+00	6.8E+00	1.55E+00	6.79E+00	1.55E+00	1.55E+00
2-Methylnaphthalene	1.7E-04	8.5E-02	3.7E-01	1.70E-04	8.5E-02	3.7E-01	7.40E-05	3.7E-02	1.6E-01	7.40E-05	3.7E-02	1.6E-01	8.50E-02	3.72E-01	8.50E-02	8.50E-02
Naphthalene	6.5E-04	3.3E-01	1.4E+00	6.5E-04	3.3E-01	1.4E+00	9.0E-05	4.5E-02	2.0E-01	9.0E-05	4.5E-02	2.0E-01	3.25E-01	1.42E+00	3.25E-01	3.25E-01
Nickel	6.3E-05	3.2E-02	1.4E-01	1.3E-03	6.5E-01	2.8E+00	6.3E-05	3.2E-02	1.4E-01	6.3E-05	3.2E-02	1.4E-01	6.50E-01	2.85E+00	6.50E-01	6.50E-01
Perylene	8.8E-09	4.4E-06	1.9E-05	8.8E-09	4.4E-06	1.9E-05	8.8E-09	4.4E-06	1.9E-05	8.8E-09	4.4E-06	1.9E-05	4.40E-06	1.93E-05	4.40E-06	4.40E-06
Phenanthrene	2.3E-05	1.2E-02	5.0E-02	2.3E-05	1.2E-02	5.0E-02	7.6E-06	3.8E-03	1.7E-02	7.6E-06	3.8E-03	1.7E-02	1.15E-02	5.04E-02	1.15E-02	1.15E-02
POM (see below)	5.5E-07	2.7E-04	1.2E-03	5.5E-07	2.7E-04	1.2E-03	5.5E-07	2.7E-04	1.2E-03	5.5E-07	2.7E-04	1.2E-03	2.74E-04	1.20E-03	2.74E-04	2.74E-04
Pyrene	3.0E-06	1.5E-03	6.6E-03	3.0E-06	1.5E-03	6.6E-03	5.4E-07	2.7E-04	1.2E-03	5.4E-07	2.7E-04	1.2E-03	1.50E-03	6.57E-03	1.50E-03	1.50E-03
2,3,7,8-TCDD	2.1E-13	1.1E-10	4.6E-10	2.1E-13	1.1E-10	4.6E-10		0.0E+00	0.0E+00		0.0E+00	0.0E+00	1.05E-10	4.60E-10	1.05E-10	1.05E-10
TOTALS:			12.57			12.44			8.19			8.19	3.49	15.29		

1) Metals: Emission factors from AP-42 (3/04), Table 11.1-12. Diesel EF is uncontrolled; all other EFs use fabric filter (uncontrolled EFs could not be located. EFs are expressed in pounds of pollutant per ton of HMA produced.

2) Organic Pollutants: Emission factors from AP-42 (3/04), Table 11.1-10., for fabric filter (uncontrolled EFs could not be located). For propane, the EFs for natural gas have been applied. EF for HCl from RFO combustion from AP-42 (3/04), Table 11.1-8. EFs expressed in pounds of pollutant per ton of HMA produced.

3) Dioxin/Furans: Max Annual Ave value represents emissions from all dioxin/furan mixtures, expressed as equivalent emissions of 2,3,7,8-TCDD, per IDAPA 58.01.01.586. Refer to Dioxin/Furan Mixture table for calculation methodology.

4) POM: Emission factors for POM based on polyaromatic hydrocarbon mixture identified in IDAPA 58.01.01.586. Refer to Polycyclic Organic Matter Mixture table for calculation methodology.

Polycyclic Organic Matter Mixture

Polycyclic Organic Matter (POM)	RFO			#2 Diesel			Nat. Gas			Propane		
	EF	lb/hr	T/yr	EF	lb/hr	T/yr	EF	lb/hr	T/yr	EF	lb/hr	T/yr
Benzo(a)anthracene	2.10E-07	1.1E-04	4.6E-04	2.10E-07	1.1E-04	4.6E-04	2.10E-07	1.1E-04	4.6E-04	2.10E-07	1.1E-04	4.6E-04
Benzo(b)fluoranthene	1.00E-07	5.0E-05	2.2E-04	1.00E-07	5.0E-05	2.2E-04	1.00E-07	5.0E-05	2.2E-04	1.00E-07	5.0E-05	2.2E-04
Benzo(k)fluoranthene	4.10E-08	2.1E-05	9.0E-05	4.10E-08	2.1E-05	9.0E-05	4.10E-08	2.1E-05	9.0E-05	4.10E-08	2.1E-05	9.0E-05
Benzo(a)pyrene	9.80E-09	4.9E-06	2.1E-05	9.80E-09	4.9E-06	2.1E-05	9.80E-09	4.9E-06	2.1E-05	9.80E-09	4.9E-06	2.1E-05
Chrysene	1.80E-07	9.0E-05	3.9E-04	1.80E-07	9.0E-05	3.9E-04	1.80E-07	9.0E-05	3.9E-04	1.80E-07	9.0E-05	3.9E-04
Dibenzo(a,h)anthracene		0.0E+00	0.0E+00		0.0E+00	0.0E+00		0.0E+00	0.0E+00		0.0E+00	0.0E+00
Indeno(1,2,3-cd)pyrene	7.00E-09	3.5E-06	1.5E-05	7.00E-09	3.5E-06	1.5E-05	7.00E-09	3.5E-06	1.5E-05	7.00E-09	3.5E-06	1.5E-05
TOTALS:	5.48E-07		0.001	5.48E-07		0.001	5.48E-07		0.001	5.48E-07		0.001

Dioxin/Furan Mixture

Dioxin/Furan	RFO			#2 Diesel			Max lb/hr	Max T/yr	TEF	Adjusted Max Annual Ave lb/hr
	EF	lb/hr	T/yr	EF	lb/hr	T/yr				
2,3,7,8-TCDD	2.1E-13	1.1E-10	4.6E-10	2.1E-13	1.1E-10	4.6E-10	1.05E-10	4.60E-10	1.0	1.05E-10
Total TCDD	9.3E-13	4.7E-10	2.0E-09	9.3E-13	4.7E-10	2.0E-09	4.65E-10	2.04E-09		
1,2,3,7,8-PeCDD	3.1E-13	1.6E-10	6.8E-10	3.1E-13	1.6E-10	6.8E-10	1.55E-10	6.79E-10	1.0	1.55E-10
Total PeCDD	2.2E-11	1.1E-08	4.8E-08	2.2E-11	1.1E-08	4.8E-08	1.10E-08	4.82E-08		
1,2,3,4,7,8-HxCDD	4.2E-13	2.1E-10	9.2E-10	4.2E-13	2.1E-10	9.2E-10	2.10E-10	9.20E-10	0.10	2.10E-11
1,2,3,6,7,8-HxCDD	1.3E-12	6.5E-10	2.8E-09	1.3E-12	6.5E-10	2.8E-09	6.50E-10	2.85E-09	0.10	6.50E-11
1,2,3,7,8,9-HxCDD	9.8E-13	4.9E-10	2.1E-09	9.8E-13	4.9E-10	2.1E-09	4.90E-10	2.15E-09	0.10	4.90E-11
Total HxCDD	5.4E-12	2.7E-09	1.2E-08	5.4E-12	2.7E-09	1.2E-08	2.70E-09	1.18E-08		
1,2,3,4,6,7,8-Hp-CDD	3.4E-11	1.7E-08	7.4E-08	3.4E-11	1.7E-08	7.4E-08	1.70E-08	7.45E-08	0.01	1.70E-10
Total HpCDD	7.1E-11	3.6E-08	1.6E-07	7.1E-11	3.6E-08	1.6E-07	3.55E-08	1.55E-07		
Octa CDD	2.7E-09	1.4E-06	5.9E-06	2.7E-09	1.4E-06	5.9E-06	1.35E-06	5.91E-06	0.0003	4.05E-10
Total PCDD	2.8E-09	1.4E-06	6.1E-06	2.8E-09	1.4E-06	6.1E-06	1.40E-06	6.13E-06		
2,3,7,8-TCDF	9.7E-13	4.9E-10	2.1E-09	9.7E-13	4.9E-10	2.1E-09	4.85E-10	2.12E-09	0.1	4.85E-11
Total TCDF	3.3E-11	1.7E-08	7.2E-08	3.3E-11	1.7E-08	7.2E-08	1.65E-08	7.23E-08		
1,2,3,7,8-PeCDF	4.3E-12	2.2E-09	9.4E-09	4.3E-12	2.2E-09	9.4E-09	2.15E-09	9.42E-09	0.03	6.45E-11
2,3,4,7,8-PeCDF	8.4E-13	4.2E-10	1.8E-09	8.4E-13	4.2E-10	1.8E-09	4.20E-10	1.84E-09	0.30	1.26E-10
Total PeCDF	7.4E-11	3.7E-08	1.6E-07	7.4E-11	3.7E-08	1.6E-07	3.70E-08	1.62E-07		
1,2,3,4,7,8-HxCDF	5.4E-12	2.7E-09	1.2E-08	5.4E-12	2.7E-09	1.2E-08	2.70E-09	1.18E-08	0.10	2.70E-10
1,2,3,6,7,8-HxCDF	1.2E-12	6.0E-10	2.6E-09	1.2E-12	6.0E-10	2.6E-09	6.00E-10	2.63E-09	0.10	6.00E-11
2,3,4,6,7,8-HxCDF	1.6E-12	8.0E-10	3.5E-09	1.6E-12	8.0E-10	3.5E-09	8.00E-10	3.50E-09	0.10	8.00E-11
1,2,3,7,8,9-HxCDF	8.4E-12	4.2E-09	1.8E-08	8.4E-12	4.2E-09	1.8E-08	4.20E-09	1.84E-08	0.10	4.20E-10
Total HxCDF	8.1E-12	4.1E-09	1.8E-08	8.1E-12	4.1E-09	1.8E-08	4.05E-09	1.77E-08		
1,2,3,4,6,7,8-HpCDF	1.1E-11	5.5E-09	2.4E-08	1.1E-11	5.5E-09	2.4E-08	5.50E-09	2.41E-08	0.01	5.50E-11
1,2,3,4,7,8,9-HpCDF	2.7E-12	1.4E-09	5.9E-09	2.7E-12	1.4E-09	5.9E-09	1.35E-09	5.91E-09	0.01	1.35E-11
Total HpCDF	3.8E-11	1.9E-08	8.3E-08	3.8E-11	1.9E-08	8.3E-08	1.90E-08	8.32E-08		
Octa CDF	4.8E-12	2.4E-09	1.1E-08	4.8E-12	2.4E-09	1.1E-08	2.40E-09	1.05E-08	0.0003	7.20E-13
Total PCDF	1.5E-10	7.5E-08	3.3E-07	1.5E-10	7.5E-08	3.3E-07	7.50E-08	3.29E-07		
Total PCDD/PCDF	3.0E-09	1.5E-06	6.6E-06	3.0E-09	1.5E-06	6.6E-06	1.50E-06	6.57E-06		
							TOTAL ADJUSTED:			2.11E-09

1) Organic Pollutants: Emission factors from AP-42 (3/04), Table 11.1-10. EFs for some constituents from diesel and RFO are uncontrolled, all other EFs for fabric filter (uncontrolled EFs could not be located). For propane, the EFs for natural gas have been applied. EF for dioxin/furans from nat. gas or propane not available. EFs expressed in pounds of pollutant per ton of HMA produced.

2) Toxic Equivalency Factors: 2005, Van den Berg, et al, The 2005 World Health Organization Reevaluation of Human and Mammalian Toxic Equivalency Factors for Dioxins and Dioxin-Like Compounds, Toxicological Sciences 93(2), 223-241 (2006). Accessible at http://toxsci.oxfordjournals.org/cgi/reprint/93/2/223. Use of the 2005 WHO toxic equivalency factors (TEFs) is consistent with current EPA recommendations for TRI reporting (72 FR 26544, May 10, 2007). IDAPA 58.01.01.586, TAPs Carcinogenic Increments: Total of adjusted emission rates are expressed as 2,3,7,8 TCDD equivalents.

Greenhouse Gases

GHG	RFO			#2 Diesel			Nat. Gas			Propane			Max lb/hr	Max T/yr
	EF	lb/hr	T/yr	EF	lb/hr	T/yr	EF	lb/hr	T/yr	EF	lb/hr	T/yr		
CO2	33.0	16500.00	72270.00	33.0	16500.00	72270.00	33.0	16500.00	72270.00	33.0	16500.00	72270.00	16500.00	72270.00
Methane	0.012	6.00	26.28	0.012	6.00	26.28	0.012	6.00	26.28	0.012	0.01	26.28	6.00	26.28
N2O	0.260	0.251	1.10	0.260	0.251	1.10	2.2	0.29	1.28	0.9	1.33	5.82	1.33	5.82
CO2e		16703.72	73162.30		16703.72	73162.30		16716.26	73217.24		16911.89	74624.86	17037.64	74624.86

1) Carbon Dioxide: Emission factors from AP-42 (3/04), Table 11.1-7. For propane, the EF for natural gas combustion was applied. EFs are expressed in pounds of CO2 per ton of HMA produced.

2) Methane: Emission factors from AP-42 (3/04), Table 11.1-8. For propane, the EF for natural gas combustion was applied. EFs are expressed in pounds of methane per ton of HMA produced.

3) N2O: For #2 diesel, emission factor from AP-42 (5/10), Table 1.3-8; EF expressed in pounds of N2O per 1000 gallons. For RFO, the EF for #2 diesel was applied. For natural gas, EF from AP-42 (7/98), Table 1.4-2, uncontrolled; EF expressed in pounds of N2O per MMSCF. For propane, Ef from AP-42 (7/08), Table 1.5-1; EF expressed in lb N2O per 1000 gallons.

4) CO2e: The sum of CO2, methane, and N2O expressed as carbon dioxide equivalent. A global warming potential of 21 was applied to methane. A GWP of 310 was applied to N2O.

Potential To Emit - HAPs

HAP	RFO			#2 Diesel			Nat. Gas			Propane			Max lb/hr	Max T/yr
	EF	lb/hr	T/yr	EF	lb/hr	T/yr	EF	lb/hr	T/yr	EF	lb/hr	T/yr		
Acenaphthene[2]	1.40E-06	7.00E-04	3.07E-03	1.40E-06	7.00E-04	3.07E-03	1.40E-06	7.00E-04	3.07E-03	1.40E-06	7.00E-04	3.07E-03	7.00E-04	0.003
Acenaphthylene[3]	2.20E-05	1.10E-02	4.82E-02	2.20E-05	1.10E-02	4.82E-02	8.60E-06	4.30E-03	1.88E-02	8.60E-06	4.30E-03	1.88E-02	1.10E-02	0.048
Acetaldehyde	1.30E-03	6.50E-01	2.85E+00		0.00E+00	0.00E+00		0.00E+00	0.00E+00		0.00E+00	0.00E+00	6.50E-01	2.847
Acrolein	2.60E-05	1.30E-02	5.69E-02		0.00E+00	0.00E+00		0.00E+00	0.00E+00		0.00E+00	0.00E+00	1.30E-02	0.057
Antimony	1.80E-07	9.00E-05	3.94E-04	1.80E-07	9.00E-05	3.94E-04	1.80E-07	9.00E-05	3.94E-04	1.80E-07	9.00E-05	3.94E-04	9.00E-05	0.000
Anthracene[3]	3.10E-06	1.55E-03	6.79E-03	3.10E-06	1.55E-03	6.79E-03	2.20E-07	1.10E-04	4.82E-04	2.20E-07	1.10E-04	4.82E-04	1.55E-03	0.007
Arsenic	5.60E-07	2.80E-04	1.23E-03	1.30E-06	6.50E-04	2.85E-03	5.60E-07	2.80E-04	1.23E-03	5.60E-07	2.80E-04	1.23E-03	6.50E-04	0.003
Benzene	3.90E-04	1.95E-01	8.54E-01	3.90E-04	1.95E-01	8.54E-01	3.90E-04	1.95E-01	8.54E-01	3.90E-04	1.95E-01	8.54E-01	1.95E-01	0.854
Benzo(a)anthracene[3]	2.10E-07	1.05E-04	4.60E-04	2.10E-07	1.05E-04	4.60E-04	2.10E-07	1.05E-04	4.60E-04	2.10E-07	1.05E-04	4.60E-04	1.05E-04	0.000
Benzo(a)pyrene[3]	9.80E-09	4.90E-06	2.15E-05	9.80E-09	4.90E-06	2.15E-05	9.80E-09	4.90E-06	2.15E-05	9.80E-09	4.90E-06	2.15E-05	4.90E-06	0.000
Benzo(b)fluoranthene[3]	1.00E-07	5.00E-05	2.19E-04	1.00E-07	5.00E-05	2.19E-04	1.00E-07	5.00E-05	2.19E-04	1.00E-07	5.00E-05	2.19E-04	5.00E-05	0.000
Benzo(e)pyrene[3]	1.10E-07	5.50E-05	2.41E-04	1.10E-07	5.50E-05	2.41E-04	1.10E-07	5.50E-05	2.41E-04	1.10E-07	5.50E-05	2.41E-04	5.50E-05	0.000
Benzo(g,h,i)perylene[3]	4.00E-08	2.00E-05	8.76E-05	4.00E-08	2.00E-05	8.76E-05	4.00E-08	2.00E-05	8.76E-05	4.00E-08	2.00E-05	8.76E-05	2.00E-05	0.000
Benzo(k)fluoranthene[3]	4.10E-08	2.05E-05	8.98E-05	4.10E-08	2.05E-05	8.98E-05	4.10E-08	2.05E-05	8.98E-05	4.10E-08	2.05E-05	8.98E-05	2.05E-05	0.000
Beryllium	0.00E+00	0.00E+00	0.00E+00	0.00E+00	0.00E+00	0.00E+00	0.00E+00	0.00E+00	0.00E+00	0.00E+00	0.00E+00	0.00E+00	0.00E+00	0.000
1,3-Butadiene		0.00E+00	0.00E+00		0.00E+00	0.00E+00		0.00E+00	0.00E+00		0.00E+00	0.00E+00	0.00E+00	0.000
Cadmium	4.10E-07	2.05E-04	8.98E-04	4.20E-06	2.10E-03	9.20E-03	4.10E-07	2.05E-04	8.98E-04	4.10E-07	2.05E-04	8.98E-04	2.10E-03	0.009
Carbon Disulfide		0.00E+00	0.00E+00		0.00E+00	0.00E+00		0.00E+00	0.00E+00		0.00E+00	0.00E+00	0.00E+00	0.000
Chromium	5.50E-06	2.75E-03	1.20E-02	2.40E-05	1.20E-02	5.26E-02	5.50E-06	2.75E-03	1.20E-02	5.50E-06	2.75E-03	1.20E-02	1.20E-02	0.053
Hexavalent Chromium	4.50E-07	2.25E-04	9.86E-04	4.50E-07	2.25E-04	9.86E-04	4.50E-07	2.25E-04	9.86E-04	4.50E-07	2.25E-04	9.86E-04	2.25E-04	0.001
Chrysene[3]	1.80E-07	9.00E-05	3.94E-04	1.80E-07	9.00E-05	3.94E-04	1.80E-07	9.00E-05	3.94E-04	1.80E-07	9.00E-05	3.94E-04	9.00E-05	0.000
Cobalt	2.60E-08	1.30E-05	5.69E-05	1.50E-05	7.50E-03	3.29E-02	2.60E-08	1.30E-05	5.69E-05	2.60E-08	1.30E-05	5.69E-05	7.50E-03	0.033
Cumene		0.00E+00	0.00E+00		0.00E+00	0.00E+00		0.00E+00	0.00E+00		0.00E+00	0.00E+00	0.00E+00	0.000
Dibenzo(a,h)anthracene[3]		0.00E+00	0.00E+00		0.00E+00	0.00E+00		0.00E+00	0.00E+00		0.00E+00	0.00E+00	0.00E+00	0.000
Dichlorobenzene		0.00E+00	0.00E+00		0.00E+00	0.00E+00		0.00E+00	0.00E+00		0.00E+00	0.00E+00	0.00E+00	0.000
Ethyl Benzene	2.40E-04	1.20E-01	5.26E-01	2.40E-04	1.20E-01	5.26E-01	2.40E-04	1.20E-01	5.26E-01	2.40E-04	1.20E-01	5.26E-01	1.20E-01	0.526
Fluoranthene[3]	6.10E-07	3.05E-04	1.34E-03	6.10E-07	3.05E-04	1.34E-03	6.10E-07	3.05E-04	1.34E-03	6.10E-07	3.05E-04	1.34E-03	3.05E-04	0.001
Fluorene[3]	1.10E-05	5.50E-03	2.41E-02	1.10E-05	5.50E-03	2.41E-02	3.80E-06	1.90E-03	8.32E-03	3.80E-06	1.90E-03	8.32E-03	5.50E-03	0.024
Formaldehyde	3.10E-03	1.55E+00	6.79E+00	3.10E-03	1.55E+00	6.79E+00	3.10E-03	1.55E+00	6.79E+00	3.10E-03	1.55E+00	6.79E+00	1.55E+00	6.789
Hexane	9.20E-04	4.60E-01	2.01E+00	9.20E-04	4.60E-01	2.01E+00	9.20E-04	4.60E-01	2.01E+00	9.20E-04	4.60E-01	2.01E+00	4.60E-01	2.015
HCl	2.10E-04	1.05E-01	4.60E-01		0.00E+00	0.00E+00		0.00E+00	0.00E+00		0.00E+00	0.00E+00	1.05E-01	0.460
Indeno(1,2,3-cd)pyrene[3]	7.00E-09	3.50E-06	1.53E-05	7.00E-09	3.50E-06	1.53E-05	7.00E-09	3.50E-06	1.53E-05	7.00E-09	3.50E-06	1.53E-05	3.50E-06	0.000
Lead	1.50E-05	7.50E-03	3.29E-02	5.40E-04	2.70E-01	1.18E+00	6.20E-07	3.10E-04	1.36E-03	6.20E-07	3.10E-04	1.36E-03	2.70E-01	1.183
Manganese	7.70E-06	3.85E-03	1.69E-02	6.50E-04	3.25E-01	1.42E+00	7.70E-06	3.85E-03	1.69E-02	7.70E-06	3.85E-03	1.69E-02	3.25E-01	1.424
Mercury	2.60E-06	1.30E-03	5.69E-03	2.60E-06	1.30E-03	5.69E-03	2.40E-07	1.20E-04	5.26E-04	2.40E-07	1.20E-04	5.26E-04	1.30E-03	0.006
Methyl Chloroform	4.80E-05	2.40E-02	1.05E-01	4.80E-05	2.40E-02	1.05E-01	4.80E-05	2.40E-02	1.05E-01	4.80E-05	2.40E-02	1.05E-01	2.40E-02	0.105
Methyl Ethyl Ketone	2.00E-05	1.00E-02	4.38E-02		0.00E+00	0.00E+00		0.00E+00	0.00E+00		0.00E+00	0.00E+00	1.00E-02	0.044
2-Methylnaphthalene[3]	1.70E-04	8.50E-02	3.72E-01	1.70E-04	8.50E-02	3.72E-01	7.40E-05	3.70E-02	1.62E-01	7.40E-05	3.70E-02	1.62E-01	8.50E-02	0.372
3-Methylchloranthrene[3]		0.00E+00	0.00E+00		0.00E+00	0.00E+00		0.00E+00	0.00E+00		0.00E+00	0.00E+00	0.00E+00	0.000
Naphthalene[3]	6.50E-04	3.25E-01	1.42E+00	6.50E-04	3.25E-01	1.42E+00	9.00E-05	4.50E-02	1.97E-01	9.00E-05	4.50E-02	1.97E-01	3.25E-01	1.424
Nickel	6.30E-05	3.15E-02	1.38E-01	1.30E-03	6.50E-01	2.85E+00	6.30E-05	3.15E-02	1.38E-01	6.30E-05	3.15E-02	1.38E-01	6.50E-01	2.847
Pentane		0.00E+00	0.00E+00		0.00E+00	0.00E+00		0.00E+00	0.00E+00		0.00E+00	0.00E+00	0.00E+00	0.000
Perylene[3]	8.80E-09	4.40E-06	1.93E-05	8.80E-09	4.40E-06	1.93E-05	8.80E-09	4.40E-06	1.93E-05	8.80E-09	4.40E-06	1.93E-05	4.40E-06	0.000
Phenanthrene[3]	2.30E-05	1.15E-02	5.04E-02	2.30E-05	1.15E-02	5.04E-02	7.60E-06	3.80E-03	1.66E-02	7.60E-06	3.80E-03	1.66E-02	1.15E-02	0.050
Phosphorus	2.80E-05	1.40E-02	6.13E-02	1.20E-03	6.00E-01	2.63E+00	2.80E-05	1.40E-02	6.13E-02	2.80E-05	1.40E-02	6.13E-02	6.00E-01	2.628
POM (see below)													4.42E-01	1.938
Propionaldehyde	1.30E-04	6.50E-02	2.85E-01		0.00E+00	0.00E+00		0.00E+00	0.00E+00		0.00E+00	0.00E+00	6.50E-02	0.285
Pyrene[3]	3.00E-06	1.50E-03	6.57E-03	3.00E-06	1.50E-03	6.57E-03	5.40E-07	2.70E-04	1.18E-03	5.40E-07	2.70E-04	1.18E-03	1.50E-03	0.007
Quinone	1.60E-04	8.00E-02	3.50E-01		0.00E+00	0.00E+00		0.00E+00	0.00E+00		0.00E+00	0.00E+00	8.00E-02	0.350
Selenium	3.50E-07	1.75E-04	7.67E-04	2.40E-06	1.20E-03	5.26E-03	3.50E-07	1.75E-04	7.67E-04	3.50E-07	1.75E-04	7.67E-04	1.20E-03	0.005
Styrene		0.00E+00	0.00E+00		0.00E+00	0.00E+00		0.00E+00	0.00E+00		0.00E+00	0.00E+00	0.00E+00	0.000
2,3,7,8-TCDD	2.10E-13	1.05E-10	4.60E-10	2.10E-13	1.05E-10	4.60E-10		0.00E+00	0.00E+00		0.00E+00	0.00E+00	1.05E-10	0.000
Toluene	2.90E-03	1.45E+00	6.35E+00	2.90E-03	1.45E+00	6.35E+00	1.50E-04	7.50E-02	3.29E-01	1.50E-04	7.50E-02	3.29E-01	1.45E+00	6.351
Total PCDD/PCDF[3]	3.0E-09	1.5E-06	6.6E-06	3.0E-09	1.5E-06	6.6E-06							1.50E-06	0.000
Xylene	2.00E-04	1.00E-01	4.38E-01	2.00E-04	1.00E-01	4.38E-01	2.00E-04	1.00E-01	4.38E-01	2.00E-04	1.00E-01	4.38E-01	1.00E-01	0.438
TOTALS:			23.33			27.21			11.70			11.70	7.13	31.25

1) Metals: Emission factors from AP-42 (3/04), Table 11.1-12. Diesel EF is uncontrolled; all other EFs use fabric filter (uncontrolled EFs could not be located. EFs are expressed in pounds of pollutant per ton of HMA produced.

2) Organic Pollutants: Emission factors from AP-42 (3/04), Table 11.1-10, for fabric filter (Except for Total PCDD/PCDF EF, which is uncontrolled, no other uncontrolled EFs were located). For propane, the EFs for natural gas have been applied. EF for HCl from RFO combustion from AP-42 (3/04), Table 11.1-8. EFs expressed in pounds of pollutant per ton of HMA produced.

3) POM: Maximum PTE estimates for POM based on polycyclic organic matter mixture as defined by 1900 CAA Amendments. Compounds included in the mixture are denoted in the table. To avoid double counting, the total, maximum PTE estimates do not include POM (i.e., individual compounds are summed separately) or 2, 3, 7, 8-TCDD (included in Total PCDD/PCDF).

Emission Unit:	Asphalt Tank Heater
Manufacturer/Model:	Gencor, Model HYCGO-100
Burner capacity (MMBTU/hr):	0.5
Fuel Type(s):	RFO, #2 Diesel, natural gas, or propane
Daily Hours of Operation (hr/d)	24
Annual Hours of Operation (hr/yr):	8760

RFO and Diesel (MMBTU/1000 gallons):	140	(AP-42, App A)
Nat. gas (BTU/scf):	1020	(AP-42, Table 1.4-1, footnote (a))
Propane (MMBTU/1000 gallons):	91.5	(AP-42, Table 1.5-1, footnote (a))
Propane (BTU/scf):	2504	(http://www.engineeringtoolbox.com/fuel-gases-combustion-values-d_510.html)

Control Equipment:	None

Potential To Emit - Criteria Pollutants

Criteria Pollutant	RFO			#2 Diesel			Nat. Gas			Propane			Max lb/hr	Max T/yr	Max 24hr Ave lb/hr	Max Annual Ave lb/hr
	EF	lb/hr	T/yr	EF	lb/hr	T/yr	EF	lb/hr	T/yr	EF	lb/hr	T/yr				
CO	2.10	0.0075	0.03	1.20	0.0043	0.02	8.50	0.0044	0.02	7.50	0.041	0.18	0.04	0.18	0.041	0.041
CO2e		78.58	345.47		100.30	439.33		98.40	430.98		69.85	305.96	100.30	439.33	100.304	100.304
NOx	16.00	0.0571	0.25	20.00	0.071	0.31	100.00	0.049	0.215	13.00	0.071	0.31	0.07	0.31	0.071	0.071
SO2	53.50	0.1911	0.84	0.213	0.001	0.003	0.60	0.0003	0.001	1.50	0.008	0.04	0.19	0.84	0.191	0.191
PM	56.10	0.2004	0.88	2.00	0.007	0.03	7.60	0.0037	0.016	0.70	0.004	0.02	0.20	0.88	0.200	0.200
PM10	48.45	0.1730357	0.76	1.00	0.004	0.02	7.60	0.0037	0.016	0.70	0.004	0.02	0.173	0.76	0.173	0.173
PM2.5	1.79	0.0063771	0.03	0.25	0.001	0.004	7.60	0.0037	0.016	0.70	0.004	0.02	0.006	0.03	0.006	0.006
VOC	1.00	0.0036	0.02	0.25	0.001	0.004	5.50	0.0027	0.012	1.00	0.005	0.02	0.01	0.02	0.005	0.005
Lead	0.50	0.0018	0.01	9.0E-06	4.5E-06	1.97E-05	5.0E-04	0.0000	1.07E-06	5.0E-04	0.000	4.37E-07	0.00	0.01	0.002	0.002

Emission Factor Information:

1) Carbon Monoxide: For diesel and natural gas, emission factors from AP-42 (3/04), Table 11.1-13. For RFO, EF from AP-42 (10/96), Table 1.11-2, for Atomizing burner. For propane, EF from AP-42 (7/08), Table 1.5-1,from AP-42 (7/08), Table 1.5-1, for propane combustion in commercial boilers. EFs for RFO, diesel, and propane are expressed in pounds of CO per 1000 gallons of fuel fired. EF for natural gas expressed in pounds of CO per MMscf of gas fired.

2) Carbon Dioxide Equivalent: Refer to Greenhouse Gases table for calculation methodology.

3) Nitrogen Oxides: For diesel, emission factor from AP-42 (5/10), Table 1.3-1, for Boilers < 100 MMBTU/hr. For RFO, EF from AP-42 (10/96), Table 1.11-2, for Atomizing burner. For natural gas, EF from AP-42 (7/98), Table 1.4-1, for uncontrolled, small boilers. EF for propane from AP-42 (7/08), Table 1.5-1, for propane combustion in commercial boilers. EFs for RFO, diesel, and propane expressed in pounds of NOx per 1000 gallons. EF for natural gas expressed in pounds of NOx per MMscf.

4) Sulfur Dioxide: For diesel, emission factor from AP-42 (5/10), Table 1.3-1, for Boilers < 100 MMBTU/hr; sulfur content is 0.0015%. For RFO, EF from AP-42 (10/96), Table 1.11-2, for Atomizing burner; sulfur content is 0.5%, per information from vendor. For natural gas, EF from AP-42 (7/98), Table 1.4-2. For propane, EF from AP-42 (7/08), Table 1.5-1, for propane combustion in commercial boilers; sulfur content assumed to be ≤15 gr/100 scf (Gas Processors Association Engineering Data Book, 1972). EFs for RFO, diesel, and propane expressed in pounds of SO2 per 1000 gallons. EF for natural gas expressed in pounds of SO2 per MMscf.

5) Particulate Matter: For diesel, emission factor from AP-42 (5/10), Table 1.3-6. For RFO, EF from AP-42 (10/96), Table 1.11-1, for Atomizing burner; 0.85% ash content, per info from vendor. EF for natural gas from AP-42 (7/98), Table 1.4-2. EF for propane from AP-42 (7/08), Table 1.5-1, for propane combustion in commercial boilers. EFs for RFO, diesel, and propane expressed in pounds of PM per 1000 gallons. EF for natural gas expressed in pounds of PM per MMscf.

6) PM-10: For diesel, emission factor from AP-42 (5/10), Table 1.3-6. For RFO, EF from AP-42 (10/96), Table 1.11-1, for Atomizing burner; 0.85% ash content, per info from vendor. EF for natural gas from AP-42 (7/98), Table 1.4-2, footnote c). EF for propane from AP-42 (7/08), Table 1.5-1, for propane combustion in commercial boilers, per footnote d), all PM assumed to be PM-10. EFs for RFO, diesel, and propane expressed in pounds of PM per 1000 gallons. EF for natural gas expressed in pounds of PM per MMscf.

7) PM-2.5: For diesel, emission factor from AP-42 (5/10), Table 1.3-6. For RFO, EF from AP-42 (5/10), Table 1.3-7, for Residual Oil, assuming No. 6 oil with a sulfur content of 0.5%, per vendor. EF for natural gas from AP-42 (7/98), Table 1.4-2, footnote c). EF for propane from AP-42 (7/08), Table 1.5-1, for propane combustion in commercial boilers, all PM assumed to be PM-2.5. EFs for RFO, diesel, and propane expressed in pounds of PM per 1000 gallons. EF for natural gas expressed in pounds of PM per MMscf.

8) VOC: For diesel, emission factor from AP-42 (5/10), Table 1.3-3, for TOC from Industrial boilers. For RFO, EF from AP-42 (10/96), Table 1.11-3, for TOC from Atomizing burner. For natural gas, EF from AP-42 (7/98), Table 1.4-2. For propane, EF from AP-42 (7/08), Table 1.5-1, for TOC from commercial boilers. EFs for RFO, diesel, and propane expressed in pounds of VOC per 1000 gallons. EF for natural gas expressed in pounds of VOC per MMscf of gas fired.

9) Lead: For diesel, emission factor from AP-42 (5/10), Table 1.3-10. For RFO, EF from AP-42 (10/96), Table 1.11-1, for Atomizing burner, 0.5% lead, per vendor's specifications. EF for natural gas from AP-42 (7/98), Table 1.4-2. For propane, EF for natural gas was applied. EF for RFO expressed in pounds of Pb per 1000 gallons. EF for diesel expressed in pounds Pb per MMBTU. EFs for natural gas and propane expressed in pounds of Pb per MMscf.

Potential To Emit - Non-Carcinogenic TAPs

Non-Carcinogen TAP	RFO			#2 Diesel			Nat. Gas			Propane			Max lb/hr	Max T/yr	Max 24hr Ave lb/hr	Max Annual Ave lb/hr
	EF	lb/hr	T/yr	EF	lb/hr	T/yr	EF	lb/hr	T/yr	EF	lb/hr	T/yr				
Antimony	4.50E-03	1.61E-05	7.04E-05										1.61E-05	7.04E-05	1.61E-05	1.61E-05
Barium							4.40E-03	2.16E-06	9.45E-06	4.40E-03	8.79E-07	3.85E-06	2.16E-06	9.45E-06	2.16E-06	2.16E-06
Chromium	1.80E-01	6.43E-04	2.82E-03	3.00E-06	1.50E-06	6.57E-06	1.40E-03	6.86E-07	3.01E-06	1.40E-03	2.80E-07	1.22E-06	6.43E-04	2.82E-03	6.43E-04	6.43E-04
Cobalt	5.20E-03	1.86E-05	8.13E-05				8.40E-05	4.12E-08	1.80E-07	8.40E-05	1.68E-08	7.35E-08	1.86E-05	8.13E-05	1.86E-05	1.86E-05
Copper				6.00E-06	3.00E-06	1.31E-05	8.50E-04	4.17E-07	1.83E-06	8.50E-04	1.70E-07	7.43E-07	3.00E-06	1.31E-05	3.00E-06	3.00E-06
Dichlorobenzene	8.00E-07	2.9E-09	1.25E-08				1.20E-03	5.88E-07	2.58E-06	1.20E-03	2.40E-07	1.05E-06	5.88E-07	2.58E-06	5.88E-07	5.88E-07
Hexane							1.8	8.82E-04	3.86E-03	1.8	3.59E-04	1.57E-03	8.82E-04	3.86E-03	8.82E-04	8.82E-04
Hydrochloric Acid	6.6	2.4E-02	1.03E-01			0.00E+00			0.00E+00			0.00E+00	2.36E-02	1.03E-01	2.36E-02	2.36E-02
Manganese	5.00E-02	1.79E-04	7.82E-04	6.00E-06	3.00E-06	1.31E-05	3.80E-04	1.86E-07	8.16E-07	3.80E-04	7.59E-08	3.32E-07	1.79E-04	7.82E-04	1.79E-04	1.79E-04
Mercury				3.00E-06	1.50E-06	6.57E-06	2.60E-04	1.27E-07	5.58E-07	2.60E-04	5.19E-08	2.27E-07	1.50E-06	6.57E-06	1.50E-06	1.50E-06
Molybdenum							1.10E-03	5.39E-07	2.36E-06	1.10E-03	2.20E-07	9.62E-07	5.39E-07	2.36E-06	5.39E-07	5.39E-07
Naphthalene	9.20E-05	3.3E-07	1.4E-06	1.70E-02	6.1E-05	2.7E-04	6.10E-04	2.99E-07	1.31E-06	6.10E-04	1.22E-07	5.34E-07	6.07E-05	2.66E-04	6.07E-05	6.07E-05
Pentane							2.60E+00	1.27E-03	5.58E-03	2.60E+00	5.19E-04	2.27E-03	1.27E-03	5.58E-03	1.27E-03	1.27E-03
Phenol	2.80E-05	1.0E-07	4.4E-07										1.00E-07	4.38E-07	1.00E-07	1.00E-07
Selenium				1.50E-05	7.50E-06	3.29E-05	2.40E-05	1.18E-08	5.15E-08	2.40E-05	4.79E-09	2.10E-08	7.50E-06	3.29E-05	7.50E-06	7.50E-06
Toluene							3.40E-03	1.67E-06	7.30E-06	3.40E-03	6.79E-07	2.97E-06	1.67E-06	7.30E-06	1.67E-06	1.67E-06
Vanadium							2.30E-03	1.13E-06	4.94E-06	2.30E-03	4.59E-07	2.01E-06	1.13E-06	4.94E-06	1.13E-06	1.13E-06
Zinc				4.00E-06	2.00E-06	8.76E-06	2.90E-02	1.42E-05	6.23E-05	2.90E-02	5.79E-06	2.54E-05	1.42E-05	6.23E-05	1.42E-05	1.42E-05
TOTALS:			1.07E-01			3.47E-04			9.54E-03			3.89E-03	0.027	0.117		

Potential To Emit - Carcinogenic TAPs

Carcinogen TAPs	RFO			#2 Diesel			Nat. Gas			Propane			Max lb/hr	Max T/yr	Max 24hr Ave lb/hr	Max Annual Ave lb/hr
	EF	lb/hr	T/yr	EF	lb/hr	T/yr	EF	lb/hr	T/yr	EF	lb/hr	T/yr				
Acenaphthene				5.30E-04	1.9E-06	8.3E-06	1.80E-06	8.82E-10	3.86E-09	1.80E-06	3.59E-10	1.57E-09	1.89E-06	8.29E-06	1.89E-06	1.89E-06
Acenaphthylene				2.00E-04	7.1E-07	3.1E-06	1.80E-06	8.82E-10	3.86E-09	1.80E-06	3.59E-10	1.57E-09	7.14E-07	3.13E-06	7.14E-07	7.14E-07
Anthracene	1.00E-04	3.6E-07	1.6E-06	1.80E-04	6.4E-07	2.8E-06	2.40E-06	1.18E-09	5.15E-09	2.40E-06	4.79E-10	2.10E-09	6.43E-07	2.82E-06	6.43E-07	6.43E-07
Arsenic	6.00E-02	2.14E-04	9.39E-04	4.00E-06	2.00E-06	8.76E-06	2.00E-04	9.80E-08	4.29E-07	2.00E-04	3.99E-08	1.75E-07	2.14E-04	9.39E-04	2.14E-04	2.14E-04
Benzene							2.10E-03	1.03E-06	4.51E-06	2.10E-03	4.19E-07	1.84E-06	1.03E-06	4.51E-06	1.03E-06	1.03E-06
Benzo(a)pyrene	4.00E-03	1.4E-05	6.3E-05			0.00E+00	1.20E-06	5.88E-10	2.58E-09	1.20E-06	2.40E-10	1.05E-09	1.43E-05	6.26E-05	1.43E-05	1.43E-05
Benzo(g,h,i)perylene							1.20E-06	5.88E-10	2.58E-09	1.20E-06	2.40E-10	1.05E-09	5.88E-10	2.58E-09	5.88E-10	5.88E-10
Beryllium	1.80E-03	6.43E-06	2.82E-05	3.00E-06	1.50E-06	6.57E-06	1.20E-05	5.88E-09	2.58E-08	1.20E-05	2.40E-09	1.05E-08	6.43E-06	2.82E-05	6.43E-06	6.43E-06
Bis(2-ethylhexyl)phthalate	2.20E-03	7.9E-06	3.4E-05										7.86E-06	3.44E-05	7.86E-06	7.86E-06
Cadmium	1.20E-02	4.29E-05	1.88E-04	3.00E-06	1.50E-06	6.57E-06	1.10E-03	5.39E-07	2.36E-06	1.10E-03	2.20E-07	9.62E-07	4.29E-05	1.88E-04	4.29E-05	4.29E-05
Dioxin/Furans (see below)													8.21E-10	3.60E-09		1.36E-12
Fluoranthene				4.40E-05	1.6E-07	6.9E-07	3.00E-06	1.47E-09	6.44E-09	3.00E-06	5.99E-10	2.62E-09	1.57E-07	6.88E-07	1.57E-07	1.57E-07
Fluorene				3.20E-05	1.1E-07	5.0E-07	2.80E-06	1.37E-09	6.01E-09	2.80E-06	5.59E-10	2.45E-09	1.14E-07	5.01E-07	1.14E-07	1.14E-07
Formaldehyde				6.10E-02	2.2E-04	9.5E-04	7.50E-02	3.68E-05	1.61E-04	7.50E-02	1.50E-05	6.56E-05	2.18E-04	9.54E-04	2.18E-04	2.18E-04
3-Methylchloranthrene							1.80E-06	8.82E-10	3.86E-09	1.80E-06	3.59E-10	1.57E-09	8.82E-10	3.86E-09	8.82E-10	8.82E-10
2-Methylnaphthalene							2.40E-05	1.18E-08	5.15E-08	2.40E-05	4.79E-09	2.10E-08	1.18E-08	5.15E-08	1.18E-08	1.18E-08
Naphthalene	9.20E-05	3.3E-07	1.4E-06	1.70E-02	6.1E-05	2.7E-04	6.10E-04	2.99E-07	1.31E-06	6.10E-04	1.22E-07	5.34E-07	6.07E-05	2.66E-04	6.07E-05	6.07E-05
Nickel	1.60E-01	5.71E-04	2.50E-03	3.00E-06	1.50E-06	6.57E-06	2.10E-03	1.03E-06	4.51E-06	2.10E-03	4.19E-07	1.84E-06	5.71E-04	2.50E-03	5.71E-04	5.71E-04
Phenanthrene	1.00E-04	3.6E-07	1.6E-06	4.90E-03	1.8E-05	7.7E-05	1.70E-05	8.33E-09	3.65E-08	1.70E-05	3.39E-09	1.49E-08	1.75E-05	7.67E-05	1.75E-05	1.75E-05
POM (see below)	1.20E-02	4.3E-05	1.9E-04	3.30E-03	1.2E-05	5.2E-05	1.14E-05	5.59E-09	2.45E-08	1.14E-05	2.28E-09	9.97E-09	4.29E-05	1.88E-04	4.29E-05	4.29E-05
Pyrene	8.30E-06	3.0E-08	1.3E-07	3.20E-05	1.1E-07	5.0E-07	5.00E-06	2.45E-09	1.07E-08	5.00E-06	9.98E-10	4.37E-09	1.14E-07	5.01E-07	1.14E-07	1.14E-07
TOTALS:			3.95E-03			1.39E-03			1.74E-04			7.10E-05	0.001	0.005		

Emission Factor Information:

1) Metals: For diesel, emission factors from AP-42 (5/10), Table 1.3-10. For RFO, EFs from AP-42 (10/96), Table 1.11-4, for Atomizing burner. For natural gas, EFs from AP-42 (7/98), Table 1.4-4. For propane, EFs for nat. gas were applied. EFs for diesel expressed in pounds of pollutant per MMBTU. EFs for RFO expressed in pounds of pollutant per 1000 gallons. EFs for natural gas and propane expressed in pounds of pollutant per MMscf.

2) Organic Pollutants: For diesel, emission factors from AP-42 (5/10), Table 1.3-8, for Distillate oil, and AP-42 (3/04), Table 11.1-13, for Hot oil system fired with No. 2 fuel oil. For diesel, EF for POM taken from Table 1.3-8 rather than summing PAHs, as this is the more conservative emissions estimate. For RFO, EFs from AP-42 (10/96), Table 1.11-5, for Atomizing burner (i.e., except for bis(2-ethylhexyl)phthalate, dichlorobeneze, benz(a)anthracene, and benzo(a)pyrene which rely on values for Vaporizing burner). For HCl from RFO, EF from AP-42 (10/96), Table 1.11-3; 0.1% weight used, per vendor information (i.e., <1000ppm for all halogens). For natural gas, EFs from AP-42 (7/98), Table 1.4-3. For propane, EFs for nat. gas were applied. EFs for diesel and RFO expressed in pounds of pollutant per 1000 gallons. EFs for natural gas and propane expressed in pounds of pollutant per MMscf.

3) Dioxin/Furans: Max Annual Ave value represents emissions from all dioxin/furan mixtures, expressed as equivalent emissions of 2,3,7,8-TCDD, per IDAPA 58.01.01.586. Refer to Dioxin/Furan Mixture table for calculation methodology.

4) POM: Emission factors for POM based on polyaromatic hydrocarbon mixture identified in IDAPA 58.01.01.586. Refer to Polycyclic Organic Matter Mixture table for calculation methodology.

Polycyclic Organic Matter Mixture

Polycyclic Organic Matter (POM)	RFO			#2 Diesel			Nat. Gas			Propane		
	EF	lb/hr	T/yr	EF	lb/hr	T/yr	EF	lb/hr	T/yr	EF	lb/hr	T/yr
Benzo(a)anthracene	4.00E-03	1.43E-05	6.26E-05			0.00E+00	1.80E-06	8.82E-10	3.86E-09	1.80E-06	3.59E-10	1.57E-09
Benzo(b)fluoranthene			0.00E+00	1.00E-04	3.6E-07	1.6E-06	1.80E-06	8.82E-10	3.86E-09	1.80E-06	3.59E-10	1.57E-09
Benzo(k)fluoranthene			0.00E+00			0.00E+00	1.80E-06	8.82E-10	3.86E-09	1.80E-06	3.59E-10	1.57E-09
Benzo(a)pyrene	4.00E-03	1.43E-05	6.26E-05			0.00E+00	1.20E-06	5.88E-10	2.58E-09	1.20E-06	2.40E-10	1.05E-09
Chrysene	4.00E-03	1.43E-05	6.26E-05			0.00E+00	1.80E-06	8.82E-10	3.86E-09	1.80E-06	3.59E-10	1.57E-09
Dibenzo(a,h)anthracene			0.00E+00			0.00E+00	1.20E-06	5.88E-10	2.58E-09	1.20E-06	2.40E-10	1.05E-09
Indeno(1,2,3-cd)pyrene			0.00E+00			0.00E+00	1.80E-06	8.82E-10	3.86E-09	1.80E-06	3.59E-10	1.57E-09
TOTALS:	1.20E-02		1.88E-04	3.30E-03		1.56E-06	1.14E-05		2.45E-08	1.14E-05		9.97E-09

Dioxin/Furan Mixture

Dioxin/Furan	RFO			#2 Diesel			Max lb/hr	Max T/yr	TEF	Adjusted Max Annual Ave lb/hr
	EF	lb/hr	T/yr	EF	lb/hr	T/yr				
1,2,3,4,7,8-HxCDD				6.90E-10	2.46E-12	1.08E-11	2.46E-12	1.08E-11	0.10	2.46E-13
1,2,3,7,8,9-HxCDD				7.60E-10	2.71E-12	1.19E-11	2.71E-12	1.19E-11	0.10	2.71E-13
HxCDD				6.20E-09	2.21E-11	9.70E-11	2.21E-11	9.70E-11		
1,2,3,4,6,7,8-Hp-CDD				1.50E-08	5.36E-11	2.35E-10	5.36E-11	2.35E-10	0.01	5.36E-13
HpCDD				2.00E-08	7.14E-11	3.13E-10	7.14E-11	3.13E-10		
Octa CDD				1.60E-07	5.71E-10	2.50E-09	5.71E-10	2.50E-09	0.0003	1.71E-13
Total PCDD				2.00E-07	7.14E-10	3.13E-09	7.14E-10	3.13E-09		
TCDF				3.30E-09	1.18E-11	5.16E-11	1.18E-11	5.16E-11		
PeCDF				4.80E-10	1.71E-12	7.51E-12	1.71E-12	7.51E-12		
HxCDF				2.00E-09	7.14E-12	3.13E-11	7.14E-12	3.13E-11		
1,2,3,4,6,7,8-HpCDF				3.50E-09	1.25E-11	5.48E-11	1.25E-11	5.48E-11	0.01	1.25E-13
HpCDF				9.70E-09	3.46E-11	1.52E-10	3.46E-11	1.52E-10		
Octa CDF				1.20E-08	4.29E-11	1.88E-10	4.29E-11	1.88E-10	0.0003	1.29E-14
Total PCDF				3.10E-08	1.11E-10	4.85E-10	1.11E-10	4.85E-10		
Total PCDD/PCDF				2.30E-07	8.21E-10	3.60E-09	8.21E-10	3.60E-09		
							TOTAL ADJUSTED:			1.36E-12

Emission Factor Information:

1) Organic Pollutants:

For diesel, emission factors from AP-42 (5/10), Table 1.3-8, for Distillate oil, and AP-42 (3/04), Table 11.1-13, for Hot oil system fired with No. 2 fuel oil.
For diesel, EF for POM taken from Table 1.3-8 rather than summing PAHs, as this is the more conservative emissions estimate.
For RFO, EFs from AP-42 (10/96), Table 1.11-5, for Atomizing burner (i.e., except for dichlorobeneze, benz(a)anthracene, and benzo(a)pyrene which rely on values for Vaporizing burner). For natural gas, EFs from AP-42 (7/98), Table 1.4-3. For propane, EFs for nat. gas were applied.
EFs for diesel and RFO expressed in pounds of pollutant per 1000 gallons. EFs for natural gas and propane expressed in pounds of pollutant per MMscf.

2) Toxic Equivalency Factors:

2005, Van den Berg, et al, The 2005 World Health Organization Reevaluation of Human and Mammalian Toxic Equivalency Factors for Dioxins and Dioxin-Like Compounds, Toxicological Sciences 93(2), 223-241 (2006). Accessible at http://toxsci.oxfordjournals.org/cgi/reprint/93/2/223. Use of the 2005 WHO toxic equivalency factors (TEFs) is consistent with current EPA recommendations for TRI reporting (72 FR 26544, May 10, 2007). IDAPA 58.01.01.586, TAPs Carcinogenic Increments:
Total of adjusted emission rates are treated as a single TAP (2,3,7,8 TCDD)

Greenhouse Gases

GHG	RFO			#2 Diesel			Nat. Gas			Propane			Max lb/hr	Max T/yr
	EF	lb/hr	T/yr	EF	lb/hr	T/yr	EF	lb/hr	T/yr	EF	lb/hr	T/yr		
CO2	22000.0	78.57	344.14	28000.0	100.00	438.00	2.0E+05	98.04	429.41	12500.0	68.31	299.18	100.00	438.00
Methane	0.216	0.001	0.003	0.216	0.001	0.003	2.3	0.001	0.005	0.2	0.001	0.005	0.001	0.005
N2O	0.260	0.001	0.004	0.260	0.001	0.004	2.2	0.001	0.005	0.9	0.005	0.02	0.005	0.02
CO2e		78.88	345.47		100.30	439.33		98.40	430.98		69.85	305.96	100.30	439.33

1) Carbon Dioxide:

For RFO, EF from AP-42, Table 1.11-3 (10/96), for Atomizing burner. Emission factors for #2 diesel and nat. gas from AP-42 (3/04), Table 11.1-13.
For propane, EF from AP-42 (7/08), Table 1.5-1, for propane combustion in commercial boilers. EFs for RFO, diesel, and propane are expressed in pounds of CO2 per 1000 gallons.
EF for natural gas expressed in pounds of CO2 per MMscf of gas fired.

2) Methane:

For #2 diesel, emission factors from AP-42 (5/10), Table 1.3-3, Commercial/institutional/residential combustors, Distillate oil fired; EF expressed in pounds of methane per 1000 gallons.
For RFO, the EF for #2 diesel was applied. For natural gas, EF from AP-42 (7/98), Table 1.4-2, uncontrolled; EF expressed in pounds of methane per MMSCF.
For propane, EF from AP-42 (7/08), Table 1.5-1; EF expressed in pounds methane per 1000 gallons.

3) N2O:

For #2 diesel, emission factor from AP-42 (5/10), Table 1.3-8; EF expressed in pounds of N2O per 1000 gallons. For RFO, the EF for #2 diesel was applied. For natural gas, EF from AP-42 (7/98), Table 1.4-2, uncontrolled; EF expressed in pounds of N2O per MMSCF. For propane, EF from AP-42 (7/08), Table 1.5-1; EF expressed in lb N2O per 1000 gallons.

4) CO2e:

The sum of CO2, methane, and N2O expressed as carbon dioxide equivalent. A global warming potential of 21 was applied to methane. A GWP of 310 was applied to N2O.

Potential To Emit - HAPs

HAP	RFO			#2 Diesel			Nat. Gas			Propane			Max lb/hr	Max T/yr
	EF	lb/hr	T/yr	EF	lb/hr	T/yr	EF	lb/hr	T/yr	EF	lb/hr	T/yr		
Acenaphthene[3]				5.30E-04	1.9E-06	8.3E-06	1.80E-06	8.82E-10	3.86E-09	1.80E-06	3.59E-10	1.57E-09	1.89E-06	8.29E-06
Acenaphthylene[3]				2.00E-04	7.1E-07	3.1E-06	1.80E-06	8.82E-10	3.86E-09	1.80E-06	3.59E-10	1.57E-09	7.14E-07	3.13E-06
Acetaldehyde		0.0E+00	0.0E+00		0.0E+00	0.0E+00		0.0E+00	0.0E+00		0.0E+00	0.0E+00	0.00E+00	0.00E+00
Acrolein		0.0E+00	0.0E+00		0.0E+00	0.0E+00		0.0E+00	0.0E+00		0.0E+00	0.0E+00	0.00E+00	0.00E+00
Antimony	4.50E-03	1.61E-05	7.04E-05										1.61E-05	7.04E-05
Anthracene[3]	1.00E-04	3.6E-07	1.6E-06	1.80E-04	6.4E-07	2.8E-06	2.40E-06	1.18E-09	5.15E-09	2.40E-06	4.79E-10	2.10E-09	6.43E-07	2.82E-06
Arsenic	6.00E-02	2.14E-04	9.39E-04	4.00E-06	2.00E-06	8.76E-06	2.00E-04	9.80E-08	4.29E-07	2.00E-04	3.99E-08	1.75E-07	2.14E-04	9.39E-04
Benzene							2.10E-03	1.03E-06	4.51E-06	2.10E-03	4.19E-07	1.84E-06	1.03E-06	4.51E-06
Benzo(a)anthracene[3]	4.00E-03	1.4E-05	6.3E-05			0.00E+00	1.80E-06	8.82E-10	3.86E-09	1.80E-06	3.59E-10	1.57E-09	1.43E-05	6.26E-05
Benzo(a)pyrene[3]	4.00E-03	1.4E-05	6.3E-05			0.00E+00	1.20E-06	5.88E-10	2.58E-09	1.20E-06	2.40E-10	1.05E-09	1.43E-05	6.26E-05
Benzo(b)fluoranthene[3]			0.00E+00	1.00E-04	3.6E-07	1.6E-06	1.80E-06	8.82E-10	3.86E-09	1.80E-06	3.59E-10	1.57E-09	3.57E-07	1.56E-06
Benzo(e)pyrene[3]		0.0E+00	0.0E+00		0.0E+00	0.0E+00		0.0E+00	0.0E+00		0.0E+00	0.0E+00	0.00E+00	0.00E+00
Benzo(g,h,i)perylene[3]							1.20E-06	5.88E-10	2.58E-09	1.20E-06	2.40E-10	1.05E-09	5.88E-10	2.58E-09
Benzo(k)fluoranthene[3]			0.00E+00			0.00E+00	1.80E-06	8.82E-10	3.86E-09	1.80E-06	3.59E-10	1.57E-09	8.82E-10	3.86E-09
Beryllium	1.80E-03	6.43E-06	2.82E-05	3.00E-06	1.50E-06	6.57E-06	1.20E-05	5.88E-09	2.58E-08	1.20E-05	2.40E-09	1.05E-08	6.43E-06	2.82E-05
Bis(2-ethylhexyl)phthalate	2.20E-03	7.9E-06	3.4E-05										7.86E-06	3.44E-05
1,3-Butadiene		0.0E+00	0.0E+00		0.0E+00	0.0E+00		0.0E+00	0.0E+00		0.0E+00	0.0E+00	0.00E+00	0.00E+00
Cadmium	1.20E-02	4.29E-05	1.88E-04	3.00E-06	1.50E-06	6.57E-06	1.10E-03	5.39E-07	2.36E-06	1.10E-03	2.20E-07	9.62E-07	4.29E-05	1.88E-04
Carbon Disulfide		0.0E+00	0.0E+00		0.0E+00	0.0E+00		0.0E+00	0.0E+00		0.0E+00	0.0E+00	0.00E+00	0.00E+00
Chromium	1.80E-01	6.43E-04	2.82E-03	3.00E-06	1.50E-06	6.57E-06	1.40E-03	6.86E-07	3.01E-06	1.40E-03	2.80E-07	1.22E-06	6.43E-04	2.82E-03
Hexavalent Chromium		0.0E+00	0.0E+00		0.0E+00	0.0E+00		0.0E+00	0.0E+00		0.0E+00	0.0E+00	0.00E+00	0.00E+00
Chrysene[3]	4.00E-03	1.4E-05	6.3E-05			0.00E+00	1.80E-06	8.82E-10	3.86E-09	1.80E-06	3.59E-10	1.57E-09	1.43E-05	6.26E-05
Cobalt	5.20E-03	1.86E-05	8.13E-05				8.40E-05	4.12E-08	1.80E-07	8.40E-05	1.68E-08	7.35E-08	1.86E-05	8.13E-05
Cumene		0.0E+00	0.0E+00		0.0E+00	0.0E+00		0.0E+00	0.0E+00		0.0E+00	0.0E+00	0.00E+00	0.00E+00
Dibenzo(a,h)anthracene[3]			0.00E+00			0.00E+00	1.20E-06	5.88E-10	2.58E-09	1.20E-06	2.40E-10	1.05E-09	5.88E-10	2.58E-09
Dibutylphthalate	3.40E-05	1.2E-07	5.3E-07										1.21E-07	5.32E-07
Dichlorobenzene	8.00E-07	2.9E-09	1.3E-08				1.20E-03	5.88E-07	2.58E-06	1.20E-03	2.40E-07	1.05E-06	5.88E-07	2.58E-06
Ethyl Benzene		0.0E+00	0.0E+00		0.0E+00	0.0E+00		0.0E+00	0.0E+00		0.0E+00	0.0E+00	0.00E+00	0.00E+00
Fluoranthene[3]				4.40E-05	1.6E-07	6.9E-07	3.00E-06	1.47E-09	6.44E-09	3.00E-06	5.99E-10	2.62E-09	1.57E-07	6.88E-07
Fluorene[3]				3.20E-05	1.1E-07	5.0E-07	2.80E-06	1.37E-09	6.01E-09	2.80E-06	5.59E-10	2.45E-09	1.14E-07	5.01E-07
Formaldehyde				6.10E-02	2.2E-04	9.5E-04	7.50E-02	3.68E-05	1.61E-04	7.50E-02	1.50E-05	6.56E-05	2.18E-04	9.54E-04
Hexane							1.8	8.82E-04	3.86E-03	1.8	3.59E-04	1.57E-03	8.82E-04	3.86E-03
Hydrochloric Acid	6.6	2.4E-02	1.03E-01			0.00E+00			0.00E+00			0.00E+00	2.38E-02	1.03E-01
Indeno(1,2,3-cd)pyrene[3]			0.00E+00			0.00E+00	1.80E-06	8.82E-10	3.86E-09	1.80E-06	3.59E-10	1.57E-09	8.82E-10	3.86E-09
Lead	0.50	0.0018	0.01	9.0E-06	2.5E-10	1.97E-05	5.0E-04	0.0000	1.07E-06	5.0E-04	0.000	4.37E-07	0.00	0.01
Manganese	5.00E-02	1.79E-04	7.82E-04	6.00E-06	3.00E-06	1.31E-05	3.80E-04	1.86E-07	8.16E-07	3.80E-04	7.59E-08	3.32E-07	1.79E-04	7.82E-04
Mercury				3.00E-06	1.50E-06	6.57E-06	2.60E-04	1.27E-07	5.58E-07	2.60E-04	5.19E-08	2.27E-07	1.50E-06	6.57E-06
Methyl Chloroform		0.0E+00	0.0E+00		0.0E+00	0.0E+00		0.0E+00	0.0E+00		0.0E+00	0.0E+00	0.00E+00	0.00E+00
Methyl Ethyl Ketone		0.0E+00	0.0E+00		0.0E+00	0.0E+00		0.0E+00	0.0E+00		0.0E+00	0.0E+00	0.00E+00	0.00E+00
2-Methylnaphthalene[3]							1.80E-06	8.82E-10	3.86E-09	1.80E-06	3.59E-10	1.57E-09	8.82E-10	3.86E-09
3-Methylchloranthrene[3]							2.40E-05	1.18E-08	5.15E-08	2.40E-05	4.79E-09	2.10E-08	1.18E-08	5.15E-08
Naphthalene[3]	9.20E-05	3.3E-07	1.4E-06	1.70E-02	6.1E-05	2.7E-04	6.10E-04	2.99E-07	1.31E-06	6.10E-04	1.22E-07	5.34E-07	6.07E-05	2.66E-04
Nickel	1.60E-01	5.71E-04	2.50E-03	3.00E-06	1.50E-06	6.57E-06	2.10E-03	1.03E-06	4.51E-06	2.10E-03	4.19E-07	1.84E-06	5.71E-04	2.50E-03
Pentane							2.60E+00	1.27E-03	5.58E-03	2.60E+00	5.19E-04	2.27E-03	1.27E-03	5.58E-03
Perylene[3]		0.0E+00	0.0E+00		0.0E+00	0.0E+00		0.0E+00	0.0E+00		0.0E+00	0.0E+00	0.00E+00	0.00E+00
Phenanthrene[3]	1.00E-04	3.6E-07	1.6E-06	4.90E-03	1.8E-05	7.7E-05	1.70E-05	8.33E-09	3.65E-08	1.70E-05	3.39E-09	1.49E-08	1.75E-05	7.67E-05
Phenol	2.80E-05	1.0E-07	4.4E-07										1.00E-07	4.38E-07
Phosphorus		0.0E+00	0.0E+00		0.0E+00	0.0E+00		0.0E+00	0.0E+00		0.0E+00	0.0E+00	0.00E+00	0.00E+00
POM (see below)													1.25E-04	5.48E-04
Propionaldehyde		0.0E+00	0.0E+00		0.0E+00	0.0E+00		0.0E+00	0.0E+00		0.0E+00	0.0E+00	0.00E+00	0.00E+00
Pyrene[3]	8.30E-06	3.0E-08	1.3E-07	3.20E-05	1.1E-07	5.0E-07	5.00E-06	2.45E-09	1.07E-08	5.00E-06	9.98E-10	4.37E-09	1.14E-07	5.01E-07
Selenium				1.50E-05	7.50E-06	3.29E-05	2.40E-05	1.18E-08	5.15E-08	2.40E-05	4.79E-09	2.10E-08	7.50E-06	3.29E-05
Styrene		0.0E+00	0.0E+00		0.0E+00	0.0E+00		0.0E+00	0.0E+00		0.0E+00	0.0E+00	0.00E+00	0.00E+00
2,3,7,8-TCDD		0.0E+00	0.0E+00		0.0E+00	0.0E+00		0.0E+00	0.0E+00		0.0E+00	0.0E+00	0.00E+00	0.00E+00
Toluene							3.40E-03	1.67E-06	7.30E-06	3.40E-03	6.79E-07	2.97E-06	1.67E-06	7.30E-06
Total PCDD/PCDF[3]				2.3E-07	8.2E-10	3.6E-09							8.21E-10	3.60E-09
Trichloroethylene		0.0E+00	0.0E+00		0.0E+00	0.0E+00		0.0E+00	0.0E+00		0.0E+00	0.0E+00	0.00E+00	0.00E+00
Xylene		0.0E+00	0.0E+00		0.0E+00	0.0E+00		0.0E+00	0.0E+00		0.0E+00	0.0E+00	0.00E+00	0.00E+00
TOTALS:			0.12			0.00			0.01			0.00	0.03	0.13

1) Metals: For diesel, emission factors from AP-42 (5/10), Table 1.3-10. For RFO, EFs from AP-42 (10/96), Table 1.11-4, for Atomizing burner. For natural gas, EFs from AP-42 (7/98), Table 1.4-4. For propane, EFs for nat. gas were applied. EFs for diesel expressed in pounds of pollutant per MMBTU. EFs for RFO expressed in pounds of pollutant per 1000 gallons. EFs for natural gas and propane expressed in pounds of pollutant per MMscf.

2) Organic Pollutants: For diesel, emission factors from AP-42 (5/10), Table 1.3-8, for Distillate oil, and AP-42 (3/04), Table 11.1-13. for Hot oil system fired with No. 2 fuel oil. For RFO, EFs from AP-42 (10/96), Table 1.11-5, for Atomizing burner (i.e., except for bis(2-ethylhexyl)phthalate, dichlorobeneze, benz(a)anthracene, and benzo(a)pyrene which rely on values for Vaporizing burner). For HCl from RFO, EF from AP-42 (10/96), Table 1.11-3; 0.1% weight used, per vendor information (i.e., <1000ppm for all halogens). For natural gas, EFs from AP-42 (7/98), Table 1.4-3. For propane, EFs for nat. gas were applied. EFs for diesel and RFO expressed in pounds of pollutant per 1000 gallons. EFs for natural gas and propane expressed in pounds of pollutant per MMscf.

3) POM: Maximum PTE estimates for POM based on polycyclic organic matter mixture as defined by 1900 CAA Amendments. Compounds included in the mixture are denoted in the table. To avoid double counting, the total, maximum PTE estimates do not include POM (i.e., individual compounds are summed separately) or 2, 3, 7, 8-TCDD (included in Total PCDD/PCDF).

Emission Unit:	Operations Generator
Manufacturer/Model:	Cummins, Model QST30-G3, mfd in 2006
Fuel Type(s):	#2 Diesel
Rated Generator Capacity (kW):	800
Gross Engine Output (bhp):	1200
Calculated Fuel Consumption (gal/hr):	60
Calculated Capacity (MMBTU/hr):	8.4
Daily Hours of Operation (hr/d)	24
Annual Hours of Operation (hr/yr):	8760

Control Equipment:	Tier 2 Certified Engine

Diesel (MMBTU/1000 gallons):	140	(AP-42 (9/85), App A)
Average BSFC (BTU/hp-hr):	7000	(AP-42 (10/96), Table 3.4-1, footnote e)

Potential To Emit - Criteria Pollutants

Criteria Pollutant	#2 Diesel			Max 24hr Ave	Max Annual Ave
	EF	lb/hr	T/yr	lb/hr	lb/hr
CO	0.822	6.90	30.24	6.90	6.90
CO2e		1387.43	6076.94	1387.43	1387.43
NOx	1.50	12.60	55.19	12.60	12.60
SO2	0.0015	0.01	0.06	0.01	0.01
PM	0.047	0.39	1.73	0.39	0.39
PM10	0.047	0.39	1.73	0.39	0.39
PM2.5	0.056	0.47	2.05	0.47	0.47
VOC	0.305	2.56	11.22	2.56	2.56
Lead					

Emission Factor Information:

1) Carbon Monoxide: Emission factor from 40 CFR 89.112, Table 1, for Tier 2 engine >560kW. Expressed in pounds of CO per MMBTU fuel input.

2) Carbon Dioxide Equivalent: Refer to Greenhouse Gases table for calculation methodology.

3) Nitrogen Oxides: Emission factor from 40 CFR 89.112, Table 1, for Tier 2 engine >560kW. Applied EF for NMHC+NOx, assuming 100% NOx. EF expressed in pounds of NOx per MMBTU fuel input.

4) Sulfur Dioxide: Emission factor from AP-42 (10/96), Table 3.4-1, for Diesel fuel; sulfur content is 0.0015%. EF expressed as pounds SO2 per MMBTU fuel input.

5) Particulate Matter: Emission factor from 40 CFR 89.112, Table 1, for Tier 2 engine >560kW. Expressed in pounds of PM per MMBTU fuel input.

6) PM-10: Assumed all PM equal to PM-10. Expressed in pounds of PM-10 per MMBTU fuel input.

7) PM-2.5: Emission factor from AP-42 (10/96), Table 3.4-2, summed EFs for filterable PM<3 and condensable PM. Expressed in pounds of PM-2.5 per MMBTU fuel input.

8) VOCs: Emission factor from 40 CFR 89.112, Table 1, for Tier 1 engine >560kW, assumed HC is equal to VOC. Expressed in pounds of VOC per MMBTU fuel input.

9) Lead: No emission factor identified for lead emissions from large uncontrolled stationary diesel engines.

Potential To Emit - Non-Carcinogenic TAPs

Non-Carcinogen TAP	#2 Diesel			Max 24hr Ave	Max Annual Ave
	EF	lb/hr	T/yr	lb/hr	lb/hr
Acrolein	7.88E-06	6.62E-05	2.90E-04	6.62E-05	6.62E-05
Naphthalene	1.30E-04	1.09E-03	4.78E-03	1.09E-03	1.09E-03
Toluene	2.81E-04	2.36E-03	1.03E-02	2.36E-03	2.36E-03
Xylenes	1.93E-04	1.62E-03	7.10E-03	1.62E-03	1.62E-03
TOTALS:			2.25E-02		

Potential To Emit - Carcinogen TAPs

Carcinogen TAP	#2 Diesel			Max 24hr Ave	Max Annual Ave
	EF	lb/hr	T/yr	lb/hr	lb/hr
Acenaphthene	4.68E-06	3.93E-05	1.72E-04	3.93E-05	3.93E-05
Acenaphthylene	9.23E-06	7.75E-05	3.40E-04	7.75E-05	7.75E-05
Acetaldehyde	2.52E-05	2.12E-04	9.27E-04	2.12E-04	2.12E-04
Anthracene	1.23E-06	1.03E-05	4.53E-05	1.03E-05	1.03E-05
Benzene	7.76E-04	6.52E-03	2.86E-02	6.52E-03	6.52E-03
Benzo(a)pyrene	2.57E-07	2.16E-06	9.46E-06	2.16E-06	2.16E-06
Benzo(g,h,i)perylene	5.56E-07	4.67E-06	2.05E-05	4.67E-06	4.67E-06
Fluoranthene	4.03E-06	3.39E-05	1.48E-04	3.39E-05	3.39E-05
Fluorene	1.28E-05	1.08E-04	4.71E-04	1.08E-04	1.08E-04
Formaldehyde	7.89E-05	6.63E-04	2.90E-03	6.63E-04	6.63E-04
Naphthalene	1.30E-04	1.09E-03	4.78E-03	1.09E-03	1.09E-03
Phenanthrene	4.08E-05	3.43E-04	1.50E-03	3.43E-04	3.43E-04
POM (see below)	4.49E-06	3.77E-05	1.65E-04	3.77E-05	3.77E-05
Pyrene	3.71E-06	3.12E-05	1.36E-04	3.12E-05	3.12E-05
TOTALS:			4.02E-02		

Polycyclic Organic Matter Mixture

Polycyclic Organic Matter (POM)	#2 Diesel		
	EF	lb/hr	T/yr
Benzo(a)anthracene	6.22E-07	5.22E-06	2.29E-05
Benzo(b)fluoranthene	1.11E-06	9.32E-06	4.08E-05
Benzo(k)fluoranthene	2.18E-07	1.83E-06	8.02E-06
Benzo(a)pyrene	2.57E-07	2.16E-06	9.46E-06
Chrysene	1.52E-06	1.28E-05	5.59E-05
Dibenzo(a,h)anthracene	3.46E-07	2.91E-06	1.27E-05
Indeno(1,2,3-cd)pyrene	4.14E-07	3.48E-06	1.52E-05
TOTALS:	4.49E-06		1.65E-04

Emission Factor Information:

1) TAPs: Emission factor from AP-42 (10/96), Tables 3.4-3 and 3.4-4. Expressed in pounds of pollutant per MMBTU of fuel input.

2) POM: Emission factors for POM based on polyaromatic hydrocarbon mixture identified in IDAPA 58.01.01.586. Refer to Polycyclic Organic Matter Mixture table for calculation methodology.

Greenhouse Gases

GHG	#2 Diesel		
	EF	lb/hr	T/yr
CO2	165.0	1386.00	6070.7
Methane	0.008	0.07	0.30
CO2e		1387.43	6076.94

Emission Factor Information:

1) Carbon Dioxide: Emission factor from AP-42 (10/96), Table 3.4-1. EF expressed in pounds of CO2 per MMBTU of fuel input.

2) Methane: Emission factor from AP-42 (10/96), Table 3.4-1; assumed 9% of TOC to be methane, per footnote f). EF expressed in pounds of methane per MMBTU of fuel input.

3) CO2e: The sum of CO2 and methane expressed as carbon dioxide equivalent. A global warming potential of 21 was applied to methane.

Potential To Emit - HAPs

HAP	#2 Diesel		
	EF	lb/hr	T/yr
Acenaphthene[2]	4.68E-06	3.93E-05	0.0002
Acenaphthylene[2]	9.23E-06	7.75E-05	0.0003
Acetaldehyde	2.52E-05	2.12E-04	0.001
Acrolein	7.88E-06	6.62E-05	0.0003
Anthracene[2]	1.23E-06	1.03E-05	0.00005
Benzene	7.76E-04	6.52E-03	0.03
Benzo(a)anthracene[2]	6.22E-07	5.22E-06	0.00002
Benzo(a)pyrene[2]	2.57E-07	2.16E-06	0.00001
Benzo(b)fluoranthene[2]	1.11E-06	9.32E-06	0.00004
Benzo(g,h,i)perylene[2]	5.56E-07	4.67E-06	0.00002
Benzo(k)fluoranthene[2]	2.18E-07	1.83E-06	0.00001
Chrysene[2]	1.52E-06	1.28E-05	0.00006
Dibenzo(a,h)anthracene[2]	3.46E-07	2.91E-06	0.00001
Fluoranthene[2]	4.03E-06	3.39E-05	0.0001
Fluorene[2]	1.28E-05	1.08E-04	0.0005
Formaldehyde	7.89E-05	6.63E-04	0.003
Indeno(1,2,3-cd)pyrene[2]	4.14E-07	3.48E-06	0.00002
Naphthalene[2]	1.30E-04	1.09E-03	0.005
Phenanthrene[2]	4.08E-05	3.43E-04	0.002
POM (see below)		1.78E-03	0.0078
Pyrene[2]	3.71E-06	3.12E-05	0.0001
Toluene	2.81E-04	2.36E-03	0.01
Xylene	1.93E-04	1.62E-03	0.01
TOTALS:			0.06

Emission Factor Information:

1) HAPs: Emission factors from AP-42 (10/96), Tables 3.4-3 and 3.4-4. Expressed in pounds of pollutant per MMBTU of fuel input.

2) POM: Maximum PTE estimates for POM based on polycyclic organic matter mixture as defined by 1900 CAA Amendments. Compounds included in the mixture are denoted in the table. To avoid double counting, the total, maximum PTE estimates do not include POM (i.e., individual compounds are summed separately).

Emission Unit:	Night Generator
Manufacturer/Model:	Wacker, Model G-50, mfd in 2010 (equipped with John Deere PowerTech 4045D engine, mfd in 2007)
Fuel Type(s):	#2 Diesel
Rated Generator Capacity (kW):	38
Gross Engine Output (bhp):	67
Calculated Fuel Consumption (gal/hr):	3.35
Calculated Capacity (MMBTU/hr):	0.469
Daily Hours of Operation (hr/d)	24
Annual Hours of Operation (hr/yr):	8760

Control Equipment:	Tier 2 Certified Engine

Diesel (MMBTU/1000 gallons):	140	(AP-42 (9/85), App A)
Average BSFC (BTU/hp-hr):	7000	(AP-42 (10/96), Table 3.4-1, footnote e)

Potential To Emit - Criteria Pollutants

Criteria Pollutant	#2 Diesel			Max 24hr Ave	Max Annual Ave
	EF	lb/hr	T/yr	lb/hr	lb/hr
CO	1.17	0.55	2.41	0.55	0.55
CO2e		76.92	336.89	76.92	76.92
NOx	1.76	0.83	3.62	0.83	0.83
SO2	0.29	0.0004	0.002	0.0004	0.0004
PM	0.09	0.04	0.19	0.04	0.04
PM10	0.09	0.04	0.19	0.04	0.04
PM2.5	0.09	0.04	0.19	0.04	0.04
VOC	0.36	0.17	0.74	0.17	0.17
Lead					

Emission Factor Information:

1) Carbon Monoxide: Emission factor from 40 CFR 89.112, Table 1, for Tier 2 engine 37≤KW<75. Expressed in pounds of CO per MMBTU fuel input.

2) Carbon Dioxide Equivalent: Refer to Greenhouse Gases table for calculation methodology.

3) Nitrogen Oxides: Emission factor from 40 CFR 89.112, Table 1, for Tier 2 engine 37≤KW<75. Applied EF for NMHC+NOx, assuming 100% NOx. EF expressed in pounds of NOx per MMBTU fuel input.

4) Sulfur Dioxide: Emission factor from AP-42 (10/96), Table 3.3-1, for Diesel fuel. Per DEQ methodology, it was assumed that the AP-42 EF is based on use a max fuel sulfur content of 0.5%; a ratio has been applied to incorporate the vendor's specification of 0.0015% sulfur (i.e., 0.0015/0.5=0.003). EF expressed as pounds SO2 per MMBTU fuel input.

5) Particulate Matter: Emission factor from 40 CFR 89.112, Table 1, for Tier 2 engine 37<KW<75. Expressed in pounds of PM per MMBTU fuel input.

6) PM-10: Assumed all PM equal to PM-10. Expressed in pounds of PM-10 per MMBTU fuel input.

7) PM-2.5: Assumed all PM equal to PM-2.5. Expressed in pounds of PM-2.5 per MMBTU fuel input.

8) VOCs: Emission factor from AP-42 (10/96), Table 3.3-1. EF for TOC Exhaust and Crankcase assumed equivalent to VOC. Expressed in pounds of VOC per MMBTU fuel input.

9) Lead: No emission factor identified for lead emissions from large uncontrolled stationary diesel engines.

Potential To Emit - Non-Carcinogenic TAPs

Non-Carcinogen TAP	#2 Diesel			Max 24hr Ave	Max Annual Ave
	EF	lb/hr	T/yr	lb/hr	lb/hr
Acrolein	9.25E-05	4.34E-05	1.90E-04	4.34E-05	4.34E-05
Naphthalene	8.48E-05	3.98E-05	1.74E-04	3.98E-05	3.98E-05
Toluene	4.09E-04	1.92E-04	8.40E-04	1.92E-04	1.92E-04
Xylenes	2.85E-04	1.34E-04	5.85E-04	1.34E-04	1.34E-04
TOTALS:			1.79E-03		

Potential To Emit - Carcinogenic TAPs

Carcinogen TAP	#2 Diesel			Max 24hr Ave	Max Annual Ave
	EF	lb/hr	T/yr	lb/hr	lb/hr
Acenaphthene	1.42E-06	6.66E-07	2.92E-06	6.66E-07	6.66E-07
Acenaphthylene	5.06E-06	2.37E-06	1.04E-05	2.37E-06	2.37E-06
Acetaldehyde	7.67E-04	3.60E-04	1.58E-03	3.60E-04	3.60E-04
Anthracene	1.87E-06	8.77E-07	3.84E-06	8.77E-07	8.77E-07
Benzene	9.33E-04	4.38E-04	1.92E-03	4.38E-04	4.38E-04
Benzo(a)pyrene	1.88E-07	8.82E-08	3.86E-07	8.82E-08	8.82E-08
Benzo(g,h,i)perylene	4.89E-07	2.29E-07	1.00E-06	2.29E-07	2.29E-07
1,3-Butadiene	3.91E-05	1.83E-05	8.03E-05	1.83E-05	1.83E-05
Fluoranthene	7.61E-06	3.57E-06	1.56E-05	3.57E-06	3.57E-06
Fluorene	2.92E-05	1.37E-05	6.00E-05	1.37E-05	1.37E-05
Formaldehyde	1.18E-03	5.53E-04	2.42E-03	5.53E-04	5.53E-04
Naphthalene	8.48E-05	3.98E-05	1.74E-04	3.98E-05	3.98E-05
Phenanthrene	2.94E-05	1.38E-05	6.04E-05	1.38E-05	1.38E-05
POM (see below)	3.43E-06	1.61E-06	7.05E-06	1.61E-06	1.61E-06
Pyrene	4.78E-06	2.24E-06	9.82E-06	2.24E-06	2.24E-06
TOTALS:			6.34E-03		

Polycyclic Organic Matter Mixture

Polycyclic Organic Matter (POM)	#2 Diesel		
	EF	lb/hr	T/yr
Benzo(a)anthracene	1.68E-06	7.88E-07	3.45E-06
Benzo(b)fluoranthene	9.91E-08	4.65E-08	2.04E-07
Benzo(k)fluoranthene	1.55E-07	7.27E-08	3.18E-07
Benzo(a)pyrene	1.88E-07	8.82E-08	3.86E-07
Chrysene	3.53E-07	1.66E-07	7.25E-07
Dibenzo(a,h)anthracene	5.83E-07	2.73E-07	1.20E-06
Indeno(1,2,3-cd)pyrene	3.75E-07	1.76E-07	7.70E-07
TOTALS:	3.43E-06		7.05E-06

Emission Factor Information:

1) TAPs: Emission factor from AP-42 (10/96), Tables 3.3-2. Expressed in pounds of pollutant per MMBTU of fuel input.

2) POM: Emission factors for POM based on polyaromatic hydrocarbon mixture identified in IDAPA 58.01.01.586. Refer to Polycyclic Organic Matter Mixture table for calculation methodology.

Greenhouse Gases

GHG	#2 Diesel		
	EF	lb/hr	T/yr
CO2	164.0	76.92	336.9
CO2e		76.92	336.89

1) Carbon Dioxide: Emission factor from AP-42 (10/96), Table 3.3-1. EF expressed in pounds of CO2 per MMBTU of fuel input.

Potential To Emit - HAPs

HAP	#2 Diesel		
	EF	lb/hr	T/yr
Acenaphthene[2]	1.42E-06	6.66E-07	2.92E-06
Acenaphthylene[2]	5.06E-06	2.37E-06	1.04E-05
Acetaldehyde	7.67E-04	3.60E-04	1.58E-03
Acrolein	9.25E-05	4.34E-05	1.90E-04
Anthracene[2]	1.87E-06	8.77E-07	3.84E-06
Benzene	9.33E-04	4.38E-04	1.92E-03
Benzo(a)anthracene[2]	1.68E-06	7.88E-07	3.45E-06
Benzo(a)pyrene[2]	1.88E-07	8.82E-08	3.86E-07
Benzo(b)fluoranthene[2]	9.91E-08	4.65E-08	2.04E-07
Benzo(g,h,i)perylene[2]	4.89E-07	2.29E-07	1.00E-06
Benzo(k)fluoranthene[2]	1.55E-07	7.27E-08	3.18E-07
1,3-Butadiene	3.91E-05	1.83E-05	8.03E-05
Chrysene[2]	3.53E-07	1.66E-07	7.25E-07
Dibenzo(a,h)anthracene[2]	5.83E-07	2.73E-07	1.20E-06
Fluoranthene[2]	7.61E-06	3.57E-06	1.56E-05
Fluorene[2]	2.92E-05	1.37E-05	6.00E-05
Formaldehyde	1.18E-03	5.53E-04	2.42E-03
Indeno(1,2,3-cd)pyrene[2]	3.75E-07	1.76E-07	7.70E-07
Naphthalene[2]	8.48E-05	3.98E-05	1.74E-04
Phenanthrene[2]	2.94E-05	1.38E-05	6.04E-05
POM (see below)		7.88E-05	3.45E-04
Pyrene[2]	4.78E-06	2.24E-06	9.82E-06
Toluene	4.09E-04	1.92E-04	8.40E-04
Xylenes	2.85E-04	1.34E-04	5.85E-04
TOTALS:			0.01

1) HAPs: Emission factor from AP-42 (10/96), Tables 3.3-2. Expressed in pounds of pollutant per MMBTU of fuel input.

2) POM: Maximum PTE estimates for POM based on polycyclic organic matter mixture as defined by 1900 CAA Amendments. Compounds included in the mixture are denoted in the table. To avoid double counting, the total, maximum PTE estimates do not include POM (i.e., individual compounds are summed separately).

Emission Unit:	Storage Tanks		
Tank Number:	Tank 1	Tank 2	Tank 3
Material:	Asphalt	RFO	#2 Diesel
Capacity (gallons):	30,000	15,000	6,000

Production capacity (T/hr):	500
Daily Hours of Operation (hr/d):	24.0
Max Daily Production (T/d):	12,000
Annual Hours of Operation (hr/yr):	8,760
Max Annual Production (T/yr):	4380000

Tank 1 Throughput

Liquid asphalt in HMA (%):	4	(typical %, per DEQ methodology and AP-42, 11.1 (3/04))
Density of liquid asphalt (lb/gal):	8.69	(http://www.engineeringtoolbox.com/density-materials-d_1652.html)
Asphalt mass per HMA (lb/T):	9.21	
Annual asphalt throughput (gal/yr):	40322209.44	
TOC emission rate (lb/yr) for 300000 gallon annual throughput:	17.97	(Output from TANKS 4.0.9d (AP-42, 7.1), assuming a throughput of 300,000 gallons of asphalt per year. See computer file for details.)
Scaled annual TOC emission rate (lb/yr):	2415.30	

Tank 2 Throughput

RFO heating value (MMBTU/1000 gallons):	140	(AP-42, App A)
Total plant capacity (MMBTU/hr):	135.5	(Drum dryer and asphalt tank heater)
Total plant capacity (gallons/hr):	967.9	
Annual RFO throughput (gal/yr):	8478428.57	
TOC emission rate (lb/yr) for 150000 gallon annual throughput:	0.10	(Output from TANKS 4.0.9d (AP-42, 7.1), assuming a throughput of 150,000 gallons of RFO per year. See computer file for details.)
Scaled annual TOC emission rate (lb/yr):	5.65	

Tank 3 Throughput

Diesel heating value (MMBTU/1000 gallons):	140	(AP-42, App A)
Total plant capacity (MMBTU/hr):	135.5	(Drum dryer and asphalt tank heater)
Total plant capacity (gallons/hr):	967.9	
Annual RFO throughput (gal/yr):	8478428.57	
TOC emission rate (lb/yr) for 60000 gallon annual throughput:	4.45	(Output from TANKS 4.0.9d (AP-42, 7.1), assuming a throughput of 60,000 gallons of RFO per year. See computer file for details.)
Scaled annual TOC emission rate (lb/yr):	628.82	

Potential To Emit - Criteria Pollutants

Criteria Pollutant	Tank 1		Tank 2		Tank 3		Total lb/hr	Total T/yr
	lb/hr	T/yr	lb/hr	T/yr	lb/hr	T/yr		
CO	0.027	0.117					0.03	0.12
CO2e							0.00	0.00
NOx							0.00	0.00
SO2							0.00	0.00
PM							0.00	0.00
PM10							0.00	0.00
PM2.5							0.00	0.00
VOC	0.276	1.208	0.0006	0.003	0.072	0.314	0.35	1.52
Lead							0.00	0.00

Emission Factor Information:

1) Carbon Monoxide: Emission factor from AP-42 (3/04), page 11.1-9 (i.e., 0.097). EF expressed as a fraction of TOC emissions. No CO emission factor information located for RFO or diesel; CO emissions expected to be very low from unheated tanks.

2) Carbon Dioxide Equivalent: Refer to Greenhouse Gases table for calculation methodology.

3) Nitrogen Oxides: No emission factor information identified; minimal NOx emissions expected from unheated storage tanks.

4) Sulfur Dioxide: No emission factor information identified; minimal SO2 emissions expected from unheated storage tanks.

5) Particulate Matter: No emission factor information identified; minimal PM emissions expected from unheated storage tanks.

6) PM-10: No emission factor information identified; minimal PM10 emissions expected from unheated storage tanks.

7) PM-2.5: No emission factor information identified; minimal PM2.5 emissions expected from unheated storage tanks.

8) VOCs: For Tank 1, onverted calculated TOC emissions rate to VOC per speciation profile in Table 11.1-16 (100% of TOC = VOC). For Tanks 2 and 3, assume all TOC is VOC.

9) Lead: No emission factor information identified; minimal lead emissions expected from unheated storage tanks.

Potential To Emit - Non-Carcinogenic TAPs

Non-Carcinogen TAP	Tank 1			Max 24hr Ave	Max Annual Ave
	EF	lb/hr	T/yr	lb/hr	lb/hr
Acetone	0.055	1.52E-04	6.64E-04	1.52E-04	1.52E-04
Bromomethane	0.0049	1.35E-05	5.92E-05	1.35E-05	1.35E-05
Carbon Disulfide	0.016	4.41E-05	1.93E-04	4.41E-05	4.41E-05
Chloroethane/Ethyl chloride	0.004	1.10E-05	4.83E-05	1.10E-05	1.10E-05
Chloromethane/Methyl chloride	0.023	6.34E-05	2.78E-04	6.34E-05	6.34E-05
Ethyl Benzene	0.038	1.05E-04	4.59E-04	1.05E-04	1.05E-04
Hexane	0.10	2.76E-04	1.21E-03	2.76E-04	2.76E-04
Methyl Ethyl Ketone	0.039	1.08E-04	4.71E-04	1.08E-04	1.08E-04
Styrene	0.0054	1.49E-05	6.52E-05	1.49E-05	1.49E-05
Toluene	0.062	1.71E-04	7.49E-04	1.71E-04	1.71E-04
Xylenes	0.257	7.09E-04	3.10E-03	7.09E-04	7.09E-04
TOTALS:			0.0073		

Potential To Emit - Carcinogenic TAPs

Carcinogen TAP	Tank 1			Max 24hr Ave	Max Annual Ave
	EF	lb/hr	T/yr	lb/hr	lb/hr
Benzene	0.032	8.82E-05	3.86E-04	8.82E-05	8.82E-05
Chloromethane/Methyl chloride	0.023	6.34E-05	2.78E-04	6.34E-05	6.34E-05
Formaldehyde	0.69	1.90E-03	8.33E-03	1.90E-03	1.90E-03
Methylene Chloride/Dichloromethane	0.00027	7.44E-07	3.26E-06	7.44E-07	7.44E-07
TOTALS:			0.0090		

Emission Factor Information:

1) TAPs: Based on speciation factors from AP-42 (3/04), Tables 11.1-16. Speciation factors are converted from percentages and multiplied by the scaled TOC emission rates from TANKS to derive the emissions rates in the PTE tables above. All EFs expressed as percentages TOC emission rates. No speciation factors located for RFO and/or diesel fuel; TAP emissions expected to be very low from unheated tanks.

Greenhouse Gases

GHG	Tank 1		
	EF	lb/hr	T/yr
Methane	0.26	0.0007	0.0031
CO2e		0.015	0.066

1) Methane: Based on speciation factor from AP-42 (3/04), Table 11.1-16. Speciation factor is converted from a percentage and then multiplied by the scaled TOC emission rates from TANKS to derive the emissions rates in the PTE tables above. All EFs expressed as percentages TOC emission rates. No speciation factors located for RFO and/or diesel fuel; GHG emissions expected to be very low from unheated tanks.

2) CO2e: A global warming potential of 21 was applied to methane to derive carbon dioxide equivalent estimates.

Potential To Emit - HAPs

HAP	Tank 1		
	EF	lb/hr	T/yr
Benzene	0.032	8.82E-05	3.86E-04
Bromomethane	0.0049	1.35E-05	5.92E-05
Carbon Disulfide	0.016	4.41E-05	1.93E-04
Chloroethane/Ethyl Chloride	0.004	1.10E-05	4.83E-05
Chloromethane/Methyl chloride	0.023	6.34E-05	2.78E-04
Ethyl Benzene	0.038	1.05E-04	4.59E-04
Formaldehyde	0.69	1.90E-03	8.33E-03
Hexane	0.10	2.76E-04	1.21E-03
Methyl Ethyl Ketone	0.039	1.08E-04	4.71E-04
Methylene Chloride/Dichloromethane	0.00027	7.44E-07	3.26E-06
Styrene	0.0054	1.49E-05	6.52E-05
Toluene	0.062	1.71E-04	7.49E-04
Xylene	0.257	7.09E-04	3.10E-03
TOTALS:			0.02

1) HAPs: Based on speciation factors from AP-42 (3/04), Tables 11.1-16. Speciation factors are converted from percentages and multiplied by the scaled TOC emission rates from TANKS to derive the emissions rates in the PTE tables above. All EFs expressed as percentages TOC emission rates. No speciation factors located for RFO and/or diesel fuel; HAP emissions expected to be very low from unheated tanks.

Emission Unit:	Silo Filling
Production capacity (T/hr):	500
Daily Hours of Operation (hr/d):	24
Max Daily Production (T/d):	12000
Annual Hours of Operation (hr/yr):	8760
Max Annual Production (T/yr):	4380000

Potential To Emit - Criteria Pollutants

Criteria Pollutant	Silo Filling			Max 24hr Ave	Max Annual Ave
	EF	lb/hr	T/yr	lb/hr	lb/hr
CO	1.18E-03	0.59	2.58	0.59	0.59
CO2e		0.33	1.46	0.33	0.33
NOx					
SO2					
PM	5.86E-04	0.29	1.28	0.29	0.29
PM10	5.86E-04	0.29	1.28	0.29	0.29
PM2.5	5.86E-04	0.29	1.28	0.29	0.29
VOC	1.22E-02	6.10	26.72	6.10	6.10
Lead					

Emission Factor Information:

1) Carbon Monoxide: Emission factor from AP-42 (3/04), Table 11.1-14, for Silo filling. Default values of -0.5 and 325°F were used for asphalt volatility (V) and HMA mix temperature (T). Expressed in pounds of CO per ton of HMA produced.

2) Carbon Dioxide Equivalent: Refer to Greenhouse Gases table for calculation methodology.

3) Nitrogen Oxides: No emission factor identified for NOx emissions from silo filling operations.

4) Sulfur Dioxide: No emission factor identified for SO2 emissions from silo filling operations.

5) Particulate Matter: Emission factor from AP-42 (3/04), Table 11.1-14, for Silo filling, Total PM. Default values of -0.5 and 325°F were used for asphalt volatility (V) and HMA mix temperature (T). Expressed in pounds of PM per ton of HMA produced.

6) PM-10: Emission factor from AP-42 (3/04), Table 11.1-14, for Silo filling, Total PM. Default values of -0.5 and 325°F were used for asphalt volatility (V) and HMA mix temperature (T). Per footnote b), all PM assumed to be PM10. Expressed in pounds of PM10 per ton of HMA produced.

7) PM-2.5: Emission factor from AP-42 (3/04), Table 11.1-14, for Silo filling, Total PM. Default values of -0.5 and 325°F were used for asphalt volatility (V) and HMA mix temperature (T). Per footnote b), all PM assumed to be PM2.5. Expressed in pounds of PM2.5 per ton of HMA produced.

8) VOCs: Emission factor from AP-42 (3/04), Table 11.1-14, for Silo filling, TOC. Default values of -0.5 and 325°F were used for asphalt volatility (V) and HMA mix temperature (T). Converted from TOC to VOC per speciation profile in Table 11.1-16 (100% of TOC = VOC). EF expressed in pounds of VOC per ton of HMA produced.

9) Lead: No emission factor identified for lead emissions from silo filling operations.

Emission Factor Estimates and PTE for Organic PM and TOC

Pollutant	EF (lbs/T HMA)	PTE	
		lb/hr	T/yr
Organic PM	2.54E-04	1.27E-01	5.56E-01
TOC	1.22E-02	6.10E+00	2.67E+01

Potential To Emit - Non-Carcinogenic TAPs

Non-Carcinogen TAP	Silo Filling			Max 24hr Ave	Max Annual Ave
	EF	lb/hr	T/yr	lb/hr	lb/hr
Acetone	0.055	3.36E-03	1.47E-02	3.36E-03	3.36E-03
Bromomethane/Methyl bromide	0.0049	2.99E-04	1.31E-03	2.99E-04	2.99E-04
Carbon Disulfide	0.016	9.76E-04	4.27E-03	9.76E-04	9.76E-04
Chloroethane/Ethyl chloride	0.004	2.44E-04	1.07E-03	2.44E-04	2.44E-04
Chloromethane/Methyl chloride	0.023	1.40E-03	6.15E-03	1.40E-03	1.40E-03
Ethyl Benzene	0.038	2.32E-03	1.02E-02	2.32E-03	2.32E-03
Hexane	0.10	6.10E-03	2.67E-02	6.10E-03	6.10E-03
Methyl Ethyl Ketone	0.039	2.38E-03	1.04E-02	2.38E-03	2.38E-03
Naphthalene	1.82	2.31E-03	1.01E-02	2.31E-03	2.31E-03
Phenol	0.0	0.00E+00	0.00E+00	0.00E+00	0.00E+00
Styrene	0.0054	3.29E-04	1.44E-03	3.29E-04	3.29E-04
Toluene	0.062	3.78E-03	1.66E-02	3.78E-03	3.78E-03
Xylenes (o-, m-, p-isomers)	0.257	1.57E-02	6.87E-02	1.57E-02	1.57E-02
TOTALS:			1.72E-01		

Potential To Emit - Carcinogenic TAPs

Carcinogen TAP	Silo Filling			Max 24hr Ave	Max Annual Ave
	EF	lb/hr	T/yr	lb/hr	lb/hr
Acenaphthene	0.47	5.97E-04	2.61E-03	5.97E-04	5.97E-04
Acenaphthylene	0.014	1.78E-05	7.79E-05	1.78E-05	1.78E-05
Anthracene	0.13	1.65E-04	7.23E-04	1.65E-04	1.65E-04
Benzene	0.032	1.95E-03	8.55E-03	1.95E-03	1.95E-03
Benzo(a)pyrene	0.0	0.00E+00	0.00E+00	0.00E+00	0.00E+00
Benzo(g,h,I)perylene	0.0	0.00E+00	0.00E+00	0.00E+00	0.00E+00
Benzo(e)pyrene	0.0095	1.21E-05	5.28E-05	1.21E-05	1.21E-05
Chloromethane/Methyl chloride	0.023	1.40E-03	6.15E-03	1.40E-03	1.40E-03
Fluoranthene	0.15	1.91E-04	8.34E-04	1.91E-04	1.91E-04
Fluorene	1.01	1.28E-03	5.62E-03	1.28E-03	1.28E-03
Formaldehyde	0.69	4.21E-02	1.84E-01	4.21E-02	4.21E-02
Methylene Chloride/Dichloromethane	0.00027	1.65E-05	7.21E-05	1.65E-05	1.65E-05
2-Methylnaphthalene	5.27	6.69E-03	2.93E-02	6.69E-03	6.69E-03
Naphthalene	1.82	2.31E-03	1.01E-02	2.31E-03	2.31E-03
Perylene	0.030	3.81E-05	1.67E-04	3.81E-05	3.81E-05
Phenanthrene	1.80	2.29E-03	1.00E-02	2.29E-03	2.29E-03
POM (see below)	2.66E-01	3.38E-04	1.48E-03	3.38E-04	3.38E-04
Pyrene	0.44	5.59E-04	2.45E-03	5.59E-04	5.59E-04
TOTALS:			2.63E-01		

Polycyclic Organic Matter Mixture

Polycyclic Organic Matter (POM)	Silo Filling		
	EF	lb/hr	T/yr
Benzo(a)anthracene	0.056	7.11E-05	3.12E-04
Benzo(b)fluoranthene	0.0	0.00E+00	0.00E+00
Benzo(k)fluoranthene	0.0	0.00E+00	0.00E+00
Benzo(a)pyrene	0.0	0.00E+00	0.00E+00
Chrysene	0.21	2.67E-04	1.17E-03
Dibenzo(a,h)anthracene	0.0	0.00E+00	0.00E+00
Indeno(1,2,3-cd)pyrene	0.0	0.00E+00	0.00E+00
TOTALS:	2.66E-01		1.48E-03

Emission Factor Information:

1) Organic PM and TOC Emission Factors: Emission factor from AP-42 (3/04), Table 11.1-14, for Silo filling. Default values of -0.5 and 325°F were used for asphalt volatility (V) and HMA mix temperature (T). Expressed in pounds of pollutant per ton of HMA produced. PTE based on max hourly and annual HMA production rates.

2) TAPs: Based on speciation factors from AP-42 (3/04), Tables 11.1-15 and 11.1-16. Speciation factors are converted from percentages and multiplied by theappropriate emission rate for Organic PM or TOC to derive the emissions rates in the PTE tables above. All EFs expressed as percentages of Organic PM or TOC emission rates.

3) POM: Emission factors for POM based on polyaromatic hydrocarbon mixture identified in IDAPA 58.01.01.586. Refer to Polycyclic Organic Matter Mixture table for calculation methodology.

Greenhouse Gases

GHG	Silo Filling		
	EF	lb/hr	T/yr
Methane	0.26	0.02	0.07
CO2e		0.33	1.46

1) Methane: Based on speciation factors from AP-42 (3/04), Table 11.1-16. Speciation factor is converted from a percentage and then multiplied by the TOC emission factor to derive the EF in the table. EF expressed in pounds of methane per ton of HMA.

2) CO2e: A global warming potential of 21 was applied to methane to derive carbon dioxide equivalent estimates.

Potential To Emit - HAPs

HAP	Silo Filling		
	EF	lb/hr	T/yr
Acenaphthene[2]	0.47	5.97E-04	0.0026
Acenaphthylene[2]	0.014	1.78E-05	0.0001
Anthracene[2]	0.13	1.65E-04	0.0007
Benzene	0.032	1.95E-03	0.0085
Benzo(a)anthracene[2]	0.056	7.11E-05	0.0003
Benzo(a)pyrene[2]	0.0	0.00E+00	0.0000
Benzo(b)fluoranthene[2]	0.0	0.00E+00	0.0000
Benzo(e)pyrene[2]	0.0095	1.21E-05	0.0001
Benzo(g,h,i)perylene[2]	0.0	0.00E+00	0.0000
Benzo(k)fluoranthene[2]	0.0	0.00E+00	0.0000
Bromomethane	0.0049	2.99E-04	0.0013
Carbon Disulfide	0.016	9.76E-04	0.0043
Chloroethane/Ethyl Chloride	0.004	2.44E-04	0.0011
Chloromethane/Methyl chloride	0.023	1.40E-03	0.0061
Chrysene[2]	0.21	2.67E-04	0.0012
Dibenzo(a,h)anthracene[2]	0.0	0.00E+00	0.0000
Ethyl Benzene	0.038	2.32E-03	0.0102
Fluoranthene[2]	0.15	1.91E-04	0.0008
Fluorene[2]	1.01	1.28E-03	0.0056
Formaldehyde	0.69	4.21E-02	0.1844
Hexane	0.10	6.10E-03	2.67E-02
Indeno(1,2,3-cd)pyrene[2]	0.0	0.00E+00	0.0000
Methyl Ethyl Ketone	3.90E-02	2.38E-03	0.0104
MTBE	0.0	0.00E+00	0.0000
Methylene Chloride	0.00027	1.65E-05	0.0001
2-Methylnaphthalene[2]	5.27	6.69E-03	0.0293
Naphthalene[2]	1.82	2.31E-03	0.0101
Perylene[2]	0.030	3.81E-05	0.0002
Phenanthrene[2]	1.80	2.29E-03	0.0100
Phenol	0.0	0.00E+00	0.0000
POM (see below)		1.45E-02	0.0635
Pyrene[2]	0.44	5.59E-04	0.0024
Styrene	0.0054	3.29E-04	0.0014
Toluene	0.062	3.78E-03	0.0166
Xylene	0.257	1.57E-02	0.0687
TOTALS:			0.40

1) HAPs: Based on speciation factors from AP-42 (3/04), Tables 11.1-15 and 11.1-16. Speciation factors are multiplied by the appropriate emission rate for Organic PM or TOC to derive the emissions rates in the PTE tables above. All EFs expressed as percentages of Organic PM or TOC emission rates.

2) POM: Maximum PTE estimates for POM based on polycyclic organic matter mixture as defined by 1900 CAA Amendments. Compounds included in the mixture are denoted in the table. To avoid double counting, the total, maximum PTE estimates do not include POM (i.e., individual compounds are summed separately).

Emission Unit:	Silo Loadout
Production capacity (T/hr):	500
Daily Hours of Operation (hr/d):	24
Max Daily Production (T/d):	12000
Annual Hours of Operation (hr/yr):	8760
Max Annual Production (T/yr):	4380000

Potential To Emit - Criteria Pollutants

Criteria Pollutant	Silo Loadout			Max 24hr Ave	Max Annual Ave
	EF	lb/hr	T/yr	lb/hr	lb/hr
CO	1.35E-03	0.68	2.96	0.68	0.68
CO2e		2.84	12.44	2.84	2.84
NOx					
SO2					
PM	5.22E-04	0.26	1.14	0.26	0.26
PM10	5.22E-04	0.26	1.14	0.26	0.26
PM2.5	5.22E-04	0.26	1.14	0.26	0.26
VOC	3.91E-03	1.96	8.56	1.96	1.96
Lead					

Emission Factor Information:

1) Carbon Monoxide: Emission factor from AP-42 (3/04), Table 11.1-14, for Loadout. Default values of -0.5 and 325°F were used for asphalt volatility (V) and HMA mix temperature (T). Expressed in pounds of CO per ton of HMA produced.

2) Carbon Dioxide Equivalent: Refer to Greenhouse Gases table for calculation methodology.

3) Nitrogen Oxides: No emission factor identified for NOx emissions from silo filling operations.

4) Sulfur Dioxide: No emission factor identified for SO2 emissions from silo filling operations.

5) Particulate Matter: Emission factor from AP-42 (3/04), Table 11.1-14, for Loadout, Total PM. Default values of -0.5 and 325°F were used for asphalt volatility (V) and HMA mix temperature (T). Expressed in pounds of PM per ton of HMA produced.

6) PM-10: Emission factor from AP-42 (3/04), Table 11.1-14, for Loadout, Total PM. Default values of -0.5 and 325°F were used for asphalt volatility (V) and HMA mix temperature (T). Per footnote b), all PM assumed to be PM10. Expressed in pounds of PM10 per ton of HMA produced.

7) PM-2.5: Emission factor from AP-42 (3/04), Table 11.1-14, for Loadout, Total PM. Default values of -0.5 and 325°F were used for asphalt volatility (V) and HMA mix temperature (T). Per footnote b), all PM assumed to be PM2.5. Expressed in pounds of PM2.5 per ton of HMA produced.

8) VOCs: Emission factor from AP-42 (3/04), Table 11.1-14, for Loadout, TOC. Default values of -0.5 and 325°F were used for asphalt volatility (V) and HMA mix temperature (T). Converted from TOC to VOC per speciation profile in Table 11.1-16 (94% of TOC = VOC). EF expressed in pounds of VOC per ton of HMA produced.

9) Lead: No emission factor identified for lead emissions from silo filling operations.

Emission Factor Estimates and PTE for Organic PM and TOC

Pollutant	EF (lbs/T HMA)	PTE	
		lb/hr	T/yr
Organic PM	3.41E-04	1.71E-01	7.47E-01
TOC	4.16E-03	2.08E+00	9.11E+00

Potential To Emit - Non-Carcinogenic TAPs

Non-Carcinogen TAP	Silo Loadout			Max 24hr Ave	Max Annual Ave
	EF	lb/hr	T/yr	lb/hr	lb/hr
Acetone	0.046	9.57E-04	4.19E-03	9.57E-04	9.57E-04
Bromomethane/Methyl bromide	0.0096	2.00E-04	8.75E-04	2.00E-04	2.00E-04
Carbon Disulfide	0.013	2.70E-04	1.18E-03	2.70E-04	2.70E-04
Chloroethane/Ethyl Chloride	0.00021	4.37E-06	1.91E-05	4.37E-06	4.37E-06
Chloromethane/Methyl chloride	0.015	3.12E-04	1.37E-03	3.12E-04	3.12E-04
Cumene	0.11	2.29E-03	1.00E-02	2.29E-03	2.29E-03
Ethyl Benzene	0.28	5.82E-03	2.55E-02	5.82E-03	5.82E-03
Hexane	0.15	3.12E-03	1.37E-02	3.12E-03	3.12E-03
Methyl Ethyl Ketone	0.049	1.02E-03	4.46E-03	1.02E-03	1.02E-03
Naphthalene	1.25	2.13E-03	9.33E-03	2.13E-03	2.13E-03
Phenol	1.18	2.01E-03	8.81E-03	2.01E-03	2.01E-03
Styrene	0.0073	1.52E-04	6.65E-04	1.52E-04	1.52E-04
Toluene	0.21	4.37E-03	1.91E-02	4.37E-03	4.37E-03
1,1,1-Trichloroethane/Methyl Chlorofor	0.00	0.00E+00	0.00E+00	0.00E+00	0.00E+00
Xylenes (o-, m-, p-isomers)	0.49	1.02E-02	4.46E-02	1.02E-02	1.02E-02
TOTALS:			1.44E-01		

Potential To Emit - Carcinogenic TAPs

Carcinogen TAP	Silo Loadout			Max 24hr Ave	Max Annual Ave
	EF	lb/hr	T/yr	lb/hr	lb/hr
Acenaphthene	0.26	4.43E-04	1.94E-03	4.43E-04	4.43E-04
Acenaphthylene	0.028	4.77E-05	2.09E-04	4.77E-05	4.77E-05
Anthracene	0.070	1.19E-04	5.23E-04	1.19E-04	1.19E-04
Benzene	0.052	1.08E-03	4.74E-03	1.08E-03	1.08E-03
Benzo(a)pyrene	0.0023	3.92E-06	1.72E-05	3.92E-06	3.92E-06
Benzo(g,h,i)perylene	0.0019	3.24E-06	1.42E-05	3.24E-06	3.24E-06
Benzo(e)pyrene	0.0078	1.33E-05	5.82E-05	1.33E-05	1.33E-05
Chloromethane/Methyl chloride	0.015	3.12E-04	1.37E-03	3.12E-04	3.12E-04
Fluoranthene	0.050	8.53E-05	3.73E-04	8.53E-05	8.53E-05
Fluorene	0.77	1.31E-03	5.75E-03	1.31E-03	1.31E-03
Formaldehyde	0.088	1.83E-03	8.02E-03	1.83E-03	1.83E-03
Methylene Chloride/Dichloromethane	0.0	0.00E+00	0.00E+00	0.00E+00	0.00E+00
2-Methylnaphthalene	2.38	4.06E-03	1.78E-02	4.06E-03	4.06E-03
Naphthalene	1.25	2.13E-03	9.33E-03	2.13E-03	2.13E-03
Perylene	0.022	3.75E-05	1.64E-04	3.75E-05	3.75E-05
Phenanthrene	0.81	1.38E-03	6.05E-03	1.38E-03	1.38E-03
POM (see below)	1.35E-01	2.30E-04	1.01E-03	2.30E-04	2.30E-04
Pyrene	0.15	2.56E-04	1.12E-03	2.56E-04	2.56E-04
Tetrachloroethene/Tetrachloroethylene	0.0077	1.60E-04	7.02E-04	1.60E-04	1.60E-04
Trichloroethene/Trichloroethylene	0.0	0.00E+00	0.00E+00	0.00E+00	0.00E+00
TOTALS:			5.92E-02		

Polycyclic Organic Matter Mixture

Polycyclic Organic Matter (POM)	Silo Loadout		
	EF	lb/hr	T/yr
Benzo(a)anthracene	0.019	3.24E-05	1.42E-04
Benzo(b)fluoranthene	0.0076	1.30E-05	5.68E-05
Benzo(k)fluoranthene	0.0022	3.75E-06	1.64E-05
Benzo(a)pyrene	0.0023	3.92E-06	1.72E-05
Chrysene	0.103	1.76E-04	7.69E-04
Dibenzo(a,h)anthracene	0.00037	6.31E-07	2.76E-06
Indeno(1,2,3-cd)pyrene	0.00047	8.01E-07	3.51E-06
TOTALS:	1.35E-01		1.01E-03

Emission Factor Information:

1) Organic PM and TOC Emission Factors: Emission factor from AP-42 (3/04), Table 11.1-14, for Loadout. Default values of -0.5 and 325°F were used for asphalt volatility (V) and HMA mix temperature (T). Expressed in pounds of pollutant per ton of HMA produced. PTE based on max hourly and annual HMA production rates.

2) TAPs: Based on speciation factors from AP-42 (3/04), Tables 11.1-15 and 11.1-16. Speciation factors are converted from percentages and multiplied by theappropriate emission rate for Organic PM or TOC to derive the emissions rates in the PTE tables above. All EFs expressed as percentages of Organic PM or TOC emission rates.

3) POM: Emission factors for POM based on polyaromatic hydrocarbon mixture identified in IDAPA 58.01.01.586. Refer to Polycyclic Organic Matter Mixture table for calculation methodology.

Greenhouse Gases

GHG	Silo Loadout		
	EF	lb/hr	T/yr
Methane	6.50	0.14	0.59
CO2e		2.84	12.44

1) Methane: Based on speciation factors from AP-42 (3/04), Table 11.1-16. Speciation factor is converted from a percentage and then multiplied by the TOC emission factor to derive the EF in the table. EF expressed in pounds of methane per ton of HMA.

2) CO2e: A global warming potential of 21 was applied to methane to derive carbon dioxide equivalent estimates.

Potential To Emit - HAPs

HAP	Silo Loadout		
	EF	lb/hr	T/yr
Acenaphthene[2]	0.26	4.43E-04	0.0019
Acenaphthylene[2]	0.028	4.77E-05	0.0002
Anthracene[2]	0.070	1.19E-04	0.0005
Benzene	0.052	1.08E-03	0.0047
Benzo(a)anthracene[2]	0.019	3.24E-05	0.0001
Benzo(a)pyrene[2]	0.0023	3.92E-06	0.0000
Benzo(b)fluoranthene[2]	0.0076	1.30E-05	0.0001
Benzo(e)pyrene[2]	0.0078	1.33E-05	0.0001
Benzo(g,h,i)perylene[2]	0.0019	3.24E-06	0.0000
Benzo(k)fluoranthene[2]	0.0022	3.75E-06	0.0000
Bromomethane	0.0096	2.00E-04	0.0009
Carbon Disulfide	0.013	2.70E-04	0.0012
Chloroethane/Ethyl Chloride	0.00021	4.37E-06	0.0000
Chloromethane/Methyl chloride	0.015	3.12E-04	0.0014
Chrysene[2]	0.103	1.76E-04	0.0008
Cumene	0.11	2.29E-03	0.0100
Dibenzo(a,h)anthracene[2]	0.00037	6.31E-07	0.0000
Ethyl Benzene	0.28	5.82E-03	0.0255
Fluoranthene[2]	0.050	8.53E-05	0.0004
Fluorene[2]	0.77	1.31E-03	0.0058
Formaldehyde	0.088	1.83E-03	0.0080
Hexane	0.15	3.12E-03	0.0137
Indeno(1,2,3-cd)pyrene[2]	0.00047	8.01E-07	0.0000
Methyl Chloroform	0.00	0.00E+00	0.0000
Methyl Ethyl Ketone	0.049	1.02E-03	0.0045
MTBE	0.0	0.00E+00	0.0000
Methylene Chloride	0.0	0.00E+00	0.0000
2-Methylnaphthalene[2]	2.38	4.06E-03	0.0178
Naphthalene[2]	1.25	2.13E-03	0.0093
Perylene[2]	0.022	3.75E-05	0.0002
Phenanthrene[2]	0.81	1.38E-03	0.0060
Phenol	1.18	2.01E-03	0.0088
POM (see below)		1.01E-02	0.0443
Pyrene[2]	0.15	2.56E-04	0.0011
Styrene	0.0073	1.52E-04	0.0007
Tetrachloroethene/Tetrachloroethylene	0.0077	1.60E-04	0.0007
Toluene	0.21	4.37E-03	0.0191
Trichloroethene/Trichloroethylene	0.0	0.00E+00	0.0000
Xylene	0.49	1.02E-02	0.0446
TOTALS:			0.19

1) HAPs: Based on speciation factors from AP-42 (3/04), Tables 11.1-15 and 11.1-16. Speciation factors are converted from percentages and multiplied by theappropriate emission rate for Organic PM or TOC to derive the emissions rates in the PTE tables above. All EFs expressed as percentages of Organic PM or TOC emission rates.

2) POM: Maximum PTE estimates for POM based on polycyclic organic matter mixture as defined by 1900 CAA Amendments. Compounds included in the mixture are denoted in the table. To avoid double counting, the total, maximum PTE estimates do not include POM (i.e., individual compounds are summed separately).

Emission Unit:	Aggregate Handling and Screening
Aggregrate in HMA (%):	96 (Typical %, per DEQ methodology and AP-42, 11.1 (3/04))
Production Capacity (T/hr):	480
Daily Hours of Operation (hr/d):	24
Max Daily Production (T/d):	11520
Annual Hours of Operation (hr/yr):	8760
Max Annual Production (T/yr):	4204800

1. AGGREGATE DROPS FROM FRONT END LOADER

Total tansfer points:	1	From drop to cold bins (stockpile will already be onsite during HMA operations).

Potential To Emit - Criteria Pollutants

Criteria Pollutant	EF	lb/hr	T/yr	Max 24hr Ave lb/hr	Max Annual Ave lb/hr
PM	0.003305	1.59	6.95	1.59	1.59
PM10	0.000765	0.37	1.61	0.37	0.37
PM2.5	0.000116	0.06	0.24	0.06	0.06

Emission Factor Information:

1) Particulate Matter: Emission factor from AP-42, 13.2.4 (11/06), Equation 1: $EF = k (0.0032) \times (U/5)^{1.3} / (M/2)^{1.4}$
Where: k (particle size multiplier) = 0.74 for PM, U (mean wind speed) = 10 mph, and M (moisture content) = 5%. Per DEQ methodology, 10 mph assumed to be base case for mean wind speed. Moisture typically ranges from 3-7% (STAPPA-ALAPCO-EPA, Emission Inventory Improvement Program, Volume II, Chapter 3, Preferred and Alternative Methods for Estimating Air from Hot Mix Asphalt Plants, Final Report, July 1996); 5% is typical for Western Construction HMA plants, per owner. EF expressed in pounds of PM per ton of aggregate.

2) PM-10: Emission factor from AP-42, 13.2.4 (11/06), Equation 1: $EF = k (0.0032) \times (U/5)^{1.3} / (M/2)^{1.4}$
Where: k (particle size multiplier) = 0.35 for PM, U (mean wind speed) = 10 mph, and M (moisture content) = 5%. Per DEQ methodology, 10 mph assumed to be base case for mean wind speed. Moisture typically ranges from 3-7% (STAPPA-ALAPCO-EPA, Emission Inventory Improvement Program, Volume II, Chapter 3, Preferred and Alternative Methods for Estimating Air from Hot Mix Asphalt Plants, Final Report, July 1996); 5% is typical for Western Construction HMA plants, per owner. EF expressed in pounds of PM10 per ton of aggregate.

3) PM-2.5: Emission factor from AP-42, 13.2.4 (11/06), Equation 1: $EF = k (0.0032) \times (U/5)^{1.3} / (M/2)^{1.4}$
Where: k (particle size multiplier) = 0.053 for PM, U (mean wind speed) = 10 mph, and M (moisture content) = 5%. Per DEQ methodology, 10 mph assumed to be base case for mean wind speed. Moisture typically ranges from 3-7% (STAPPA-ALAPCO-EPA, Emission Inventory Improvement Program, Volume II, Chapter 3, Preferred and Alternative Methods for Estimating Air from Hot Mix Asphalt Plants, Final Report, July 1996); 5% is typical for Western Construction HMA plants, per owner. EF expressed in pounds of PM2.5 per ton of aggregate.

4) Other Pollutants: No emissions other than particulate matter are associated with aggregate handling.

2. AGGREGATE DROPS FROM CONVEYERS

Total tansfer points:	4	[1) bins to conveyor, 2) conveyor to screen, 3) screen to conveyor, and 4) conveyor to drum]

Potential To Emit - Criteria Pollutants

Criteria Pollutant	EF	lb/hr	T/yr	Max 24hr Ave lb/hr	Max Annual Ave lb/hr
PM	0.00300	5.76	25.23	5.76	5.76
PM10	0.001100	2.11	9.25	2.11	2.11
PM2.5	0.001100	2.11	9.25	2.11	2.11

Emission Factor Information:

1) Particulate Matter: Emission factor from AP-42 (8/04), Table 11.19.2-2, for Total PM, Conveyor Transfer Point. Controls for emissions are not observed. EF expressed in pounds of PM per ton of aggregate.

2) PM-10: Emission factor from AP-42 (8/04), Table 11.19.2-2, for Total PM-10, Conveyor Transfer Point. Controls for emissions are not observed. EF expressed in pounds of PM-10 per ton of aggregate.

3) PM-2.5: Emission factor from AP-42 (8/04), Table 11.19.2-2, for Total PM-10, Conveyor Transfer Point. All PM-10 assumed to be equal to PM-2.5. Controls for emissions are not observed. EF expressed in pounds of PM-2.5 per ton of aggregate.

3. AGGREGATE SCREENING

Screens:	1

Potential To Emit - Criteria Pollutants

Criteria Pollutant	EF	lb/hr	T/yr	Max 24hr Ave lb/hr	Max Annual Ave lb/hr
PM	0.0250	12.00	52.56	12.00	12.00
PM10	0.00870	4.18	18.29	4.18	4.18
PM2.5	0.008700	4.18	18.29	4.18	4.18

Emission Factor Information:

1) Particulate Matter: Emission factor from AP-42 (8/04), Table 11.19.2-2, for Total PM, Screening. Controls for emissions are not observed. EF expressed in pounds of PM per ton of aggregate.

2) PM-10: Emission factor from AP-42 (8/04), Table 11.19.2-2, for Total PM-10, Screening. Controls for emissions are not observed. EF expressed in pounds of PM-10 per ton of aggregate.

3) PM-2.5: Emission factor from AP-42 (8/04), Table 11.19.2-2, for Total PM-10, Screening. All PM-10 assumed to be equal to PM-2.5. Controls for emissions are not observed. EF expressed in pounds of PM-2.5 per ton of aggregate.

Potential To Emit - Criteria Pollutants

Criteria Pollutant	HMA Drum Dryer		Asphalt Heater		Operations Generator		Night Generator		Storage Tanks		Silo Filling		Loadout		TOTAL	
	lb/hr	T/yr	lb/hr	T/yr	lb/hr	T/yr	lb/hr	T/yr	lb/hr	T/yr	lb/hr	T/yr	lb/hr	T/yr	lb/hr	T/yr
CO	65.00	284.70	0.04	0.18	6.90	30.24	0.55	2.41	0.03	0.12	0.59	2.58	0.68	2.96	73.79	323.19
CO2e	16911.89	74624.86	100.30	439.33	1387.43	6076.94	76.92	336.89	0.00	0.00	0.33	1.46	2.84	12.44	18479.71	81491.92
NOx	27.50	120.45	0.07	0.31	12.60	55.19	0.83	3.62	0.00	0.00	0.00	0.00	0.00	0.00	41.00	179.57
SO2	29.00	127.02	0.19	0.84	0.01	0.06	0.00	0.00	0.00	0.00	0.00	0.00	0.00	0.00	29.20	127.91
PM	14000.00	61320.00	0.20	0.88	0.39	1.73	0.04	0.19	0.00	0.00	0.29	1.28	0.26	1.14	14001.19	61325.23
PM10	3250.00	14235.00	0.17	0.76	0.39	1.73	0.04	0.19	0.00	0.00	0.29	1.28	0.26	1.14	3251.17	14240.11
PM2.5	14137.50	61922.25	0.01	0.03	0.47	2.05	0.04	0.19	0.00	0.00	0.29	1.28	0.26	1.14	14138.57	61926.94
VOC	16.00	70.08	0.01	0.02	2.56	11.22	0.17	0.74	0.35	1.52	6.10	26.72	1.96	8.56	27.14	118.87
Lead	0.27	1.18	0.00	0.01	0.00	0.00	0.00	0.00	0.00	0.00	0.00	0.00	0.00	0.00	0.27	1.19

Potential To Emit - Non-carcinogen Toxic Air Pollutants

Non-carcinogen TAP	HMA Drum Dryer		Asphalt Heater		Operations Generator		Night Generator		Asphalt Storage Tank		Silo Filling		Loadout		TOTAL	
	lb/hr	T/yr	lb/hr	T/yr	lb/hr	T/yr	lb/hr	T/yr	lb/hr	T/yr	lb/hr	T/yr	lb/hr	T/yr	lb/hr	T/yr
Acetone	4.15E-01	1.82E+00							1.52E-04	6.64E-04	3.36E-03	1.47E-02	9.57E-04	4.19E-03	4.19E-01	1.84E+00
Acrolein	1.30E-02	5.69E-02			6.62E-05	2.90E-04	4.34E-05	1.90E-04							1.31E-02	5.74E-02
Antimony	9.00E-05	3.94E-04	1.61E-05	7.04E-05											1.06E-04	4.65E-04
Barium	1.25E-01	5.48E-01	2.16E-06	9.45E-06											1.25E-01	5.48E-01
Bromomethane									1.35E-05	5.92E-05	2.99E-04	1.31E-03	2.00E-04	8.75E-04	5.12E-04	2.24E-03
Carbon Disulfide									4.41E-05	1.93E-04	9.76E-04	4.27E-03	2.70E-04	1.18E-03	1.29E-03	5.65E-03
Chloroethane/Ethyl chloride									1.10E-05	4.83E-05	2.44E-04	1.07E-03	4.37E-06	1.91E-05	2.59E-04	1.14E-03
Chloromethane/Methyl chloride									6.34E-05	2.78E-04	1.40E-03	6.15E-03	3.12E-04	1.37E-03	1.78E-03	7.79E-03
Chromium	1.20E-02	5.26E-02	6.43E-04	2.82E-03											1.26E-02	5.54E-02
Cobalt	7.50E-03	3.29E-02	1.86E-05	8.13E-05											7.52E-03	3.29E-02
Copper	8.50E-02	3.72E-01	3.00E-06	1.31E-05											8.50E-02	3.72E-01
Crotonaldehyde	4.30E-02	1.88E-01													4.30E-02	1.88E-01
Cumene													2.29E-03	1.00E-02	2.29E-03	1.00E-02
Dichlorobenzene			5.88E-07	2.58E-06											5.88E-07	2.58E-06
Ethyl Benzene	1.20E-01	5.26E-01							1.05E-04	4.59E-04	2.32E-03	1.02E-02	5.82E-03	2.55E-02	1.28E-01	5.62E-01
Heptane	4.70E+00	2.06E+01													4.70E+00	2.06E+01
Hexane	4.60E-01	2.01E+00	8.82E-04	3.86E-03					2.76E-04	1.21E-03	6.10E-03	2.67E-02	3.12E-03	1.37E-02	4.70E-01	2.06E+00
Hydrochloric Acid	1.05E-01	4.60E-01	2.36E-02	1.03E-01											1.29E-01	5.63E-01
Manganese	3.25E-01	1.42E+00	1.79E-04	7.82E-04											3.25E-01	1.42E+00
Mercury	1.30E-03	5.69E-03	1.50E-06	6.57E-06											1.30E-03	5.70E-03
Methyl Chloroform	2.40E-02	1.05E-01													2.40E-02	1.05E-01
Methyl Ethyl Ketone	1.00E-02	4.38E-02							1.08E-04	4.71E-04	2.38E-03	1.04E-02	1.02E-03	4.46E-03	1.35E-02	5.92E-02
Molybdenum			5.39E-07	2.36E-06											5.39E-07	2.36E-06
Naphthalene	3.25E-01	1.42E+00	6.07E-05	2.66E-04	1.09E-03	4.78E-03	3.98E-05	1.74E-04			2.31E-03	1.01E-02	2.13E-03	9.33E-03	3.31E-01	1.45E+00
n-Pentane	1.05E-01	4.60E-01	1.27E-03	5.58E-03											1.06E-01	4.65E-01
Phenol			1.00E-07	4.38E-07							0.00E+00	0.00E+00	2.01E-03	8.81E-03	2.01E-03	8.81E-03
Phosphorus	6.00E-01	2.63E+00													6.00E-01	2.63E+00
Propionaldehyde	6.50E-02	2.85E-01													6.50E-02	2.85E-01
Quinone	8.00E-02	3.50E-01													8.00E-02	3.50E-01
Selenium	1.20E-03	5.26E-03	7.50E-06	3.29E-05											1.21E-03	5.29E-03
Silver	2.40E-04	1.05E-03													2.40E-04	1.05E-03
Styrene									1.49E-05	6.52E-05	3.29E-04	1.44E-03	1.52E-04	6.65E-04	4.96E-04	2.17E-03
Thallium	1.10E-03	4.82E-03													1.10E-03	4.82E-03
Toluene	1.45E+00	6.35E+00	1.67E-06	7.30E-06	2.36E-03	1.03E-02	1.92E-04	8.40E-04	1.71E-04	7.49E-04	3.78E-03	1.66E-02	4.37E-03	1.91E-02	1.46E+00	6.40E+00
Valeraldehyde	3.35E-02	1.47E-01													3.35E-02	1.47E-01
Vanadium			1.13E-06	4.94E-06											1.13E-06	4.94E-06
Xylenes	1.00E-01	4.38E-01			1.62E-03	7.10E-03	1.34E-04	5.85E-04	7.09E-04	3.10E-03	1.57E-02	6.87E-02	1.02E-02	4.46E-02	1.28E-01	5.62E-01
Zinc	9.00E-02	3.94E-01	1.42E-05	6.23E-05											9.00E-02	3.94E-01

Potential To Emit - Carcinogen Toxic Air Pollutants

Carcinogen TAP	HMA Drum Dryer		Asphalt Heater		Operations Generator		Night Generator		Asphalt Storage Tank		Silo Filling		Loadout		TOTAL	
	lb/hr	T/yr	lb/hr	T/yr	lb/hr	T/yr	lb/hr	T/yr	lb/hr	T/yr	lb/hr	T/yr	lb/hr	T/yr	lb/hr	T/yr
Acenaphthene	7.00E-04	3.07E-03	1.89E-06	8.29E-06	3.93E-05	1.72E-04	6.66E-07	2.92E-06			5.97E-04	2.61E-03	4.43E-04	1.94E-03	1.78E-03	7.81E-03
Acenaphthylene	1.10E-02	4.82E-02	7.14E-07	3.13E-06	7.75E-05	3.40E-04	2.37E-06	1.04E-05			1.78E-05	7.79E-05	4.77E-05	2.09E-04	1.11E-02	4.88E-02
Acetaldehyde	6.50E-01	2.85E+00			2.12E-04	9.27E-04	3.60E-04	1.58E-03							6.51E-01	2.85E+00
Anthracene	1.55E-03	6.79E-03	6.43E-07	2.82E-06	1.03E-05	4.53E-05	8.77E-07	3.84E-06			1.65E-04	7.23E-04	1.19E-04	5.23E-04	1.85E-03	8.09E-03
Arsenic	6.50E-04	2.85E-03	2.14E-04	9.39E-04											8.64E-04	3.79E-03
Benzene	1.95E-01	8.54E-01	1.03E-06	4.51E-06	6.52E-03	2.86E-02	4.38E-04	1.92E-03	8.82E-05	3.86E-04	1.95E-03	8.55E-03	1.08E-03	4.74E-03	2.05E-01	8.98E-01
Benzo(a)pyrene	4.90E-06	2.15E-05	1.43E-05	6.26E-05	2.16E-06	9.46E-06	8.82E-08	3.86E-07			0.00E+00	0.00E+00	3.92E-06	1.72E-05	2.54E-05	1.11E-04
Benzo(g,h,i)perylene	2.00E-05	8.76E-05	5.88E-10	2.58E-09	4.67E-06	2.05E-05	2.29E-07	1.00E-06			0.00E+00	0.00E+00	3.24E-06	1.42E-05	2.81E-05	1.23E-04
Benzo(e)pyrene	5.50E-05	2.41E-04									1.21E-05	5.28E-05	1.33E-05	5.82E-05	8.04E-05	3.52E-04
Beryllium	0.00E+00	0.00E+00	6.43E-06	2.82E-05											6.43E-06	2.82E-05
Bis(2-ethylhexyl)phthalate			7.86E-06	3.44E-05											7.86E-06	3.44E-05
1,3-Butadiene							1.83E-05	8.03E-05							1.83E-05	8.03E-05
Cadmium	2.10E-03	9.20E-03	4.29E-05	1.88E-04											2.14E-03	9.39E-03
Chloromethane/Methyl chloride									6.34E-05	2.78E-04	1.40E-03	6.15E-03	3.12E-04	1.37E-03	1.78E-03	7.79E-03
Hexavalent Chromium	2.25E-04	9.86E-04													2.25E-04	9.86E-04
Total Dioxin/Furans	1.50E-06	6.57E-06	8.21E-10	3.60E-09											1.50E-06	6.57E-06
Fluoranthene	3.05E-04	1.34E-03	1.57E-07	6.88E-07	3.39E-05	1.48E-04	3.57E-06	1.56E-05			1.91E-04	8.34E-04	8.53E-05	3.73E-04	6.18E-04	2.71E-03
Fluorene	5.50E-03	2.41E-02	1.14E-07	5.01E-07	1.08E-04	4.71E-04	1.37E-05	6.00E-05			1.28E-03	5.62E-03	1.31E-03	5.75E-03	8.22E-03	3.60E-02
Formaldehyde	1.55E+00	6.79E+00	2.18E-04	9.54E-04	6.63E-04	2.90E-03	5.53E-04	2.42E-03	1.90E-03	8.33E-03	4.21E-02	1.84E-01	1.83E-03	8.02E-03	1.60E+00	7.00E+00
3-Methylchloranthrene			8.82E-10	3.86E-09											8.82E-10	3.86E-09
Methylene Chloride/Dichloromethane									7.44E-07	3.26E-06	1.65E-05	7.21E-05	0.00E+00	0.00E+00	1.72E-05	7.54E-05
2-Methylnaphthalene	8.50E-02	3.72E-01	1.18E-08	5.15E-08							6.69E-03	2.93E-02	4.06E-03	1.78E-02	9.58E-02	4.19E-01
Naphthalene	3.25E-01	1.42E+00	6.07E-05	2.66E-04	1.09E-03	4.78E-03	3.98E-05	1.74E-04			2.31E-03	1.01E-02	2.13E-03	9.33E-03	3.31E-01	1.45E+00
Nickel	6.50E-01	2.85E+00	5.71E-04	2.50E-03											6.51E-01	2.85E+00
Perylene	4.40E-06	1.93E-05									3.81E-05	1.67E-04	3.75E-05	1.64E-04	8.00E-05	3.50E-04
Phenanthrene	1.15E-02	5.04E-02	1.75E-05	7.67E-05	3.43E-04	1.50E-03	1.38E-05	6.04E-05			2.29E-03	1.00E-02	1.38E-03	6.05E-03	1.55E-02	6.81E-02
POM	2.74E-04	1.20E-03	4.29E-05	1.88E-04	3.77E-05	1.65E-04	1.61E-06	7.05E-06			3.38E-04	1.48E-03	2.30E-04	1.01E-03	9.24E-04	4.05E-03
Pyrene	1.50E-03	6.57E-03	1.14E-07	5.01E-07	3.12E-05	1.36E-04	2.24E-06	9.82E-06			5.59E-04	2.45E-03	2.56E-04	1.12E-03	2.35E-03	1.03E-02
2,3,7,8-TCDD	1.05E-10	4.60E-10													1.05E-10	4.60E-10
Tetrachloroethene/ Tetrachloroethylene													1.60E-04	7.02E-04	1.60E-04	7.02E-04
Trichloroethene/ Trichloroethylene													0.00E+00	0.00E+00	0.00E+00	0.00E+00

Potential To Emit - CAA Hazardous Air Pollutants

HAP	HMA Drum Dryer		Asphalt Heater		Operations Generator		Night Generator		Asphalt Storage Tank		Silo Filling		Loadout		TOTAL	
	lb/hr	T/yr	lb/hr	T/yr	lb/hr	T/yr	lb/hr	T/yr	lb/hr	T/yr	lb/hr	T/yr	lb/hr	T/yr	lb/hr	T/yr
Acenaphthene	7.00E-04	3.07E-03	1.89E-06	8.29E-06	3.93E-05	1.72E-04	6.66E-07	2.92E-06			5.97E-04	2.61E-03	4.43E-04	1.94E-03	0.0018	0.0078
Acenaphthylene	1.10E-02	4.82E-02	7.14E-07	3.13E-06	7.75E-05	3.40E-04	2.37E-06	1.04E-05			1.78E-05	7.79E-05	4.77E-05	2.09E-04	0.0111	0.0488
Acetaldehyde	6.50E-01	2.85E+00	0.00E+00	0.00E+00	2.12E-04	9.27E-04	3.60E-04	1.58E-03							0.6506	2.8495
Acrolein	1.30E-02	5.69E-02	0.00E+00	0.00E+00	6.62E-05	2.90E-04	4.34E-05	1.90E-04							0.0131	0.0574
Antimony	9.00E-05	3.94E-04	1.61E-05	7.04E-05											0.0001	0.0005
Anthracene	1.55E-03	6.79E-03	6.43E-07	2.82E-06	1.03E-05	4.53E-05	8.77E-07	3.84E-06			1.65E-04	7.23E-04	1.19E-04	5.23E-04	0.0018	0.0081
Arsenic	6.50E-04	2.85E-03	2.14E-04	9.39E-04											0.0009	0.0038
Benzene	1.95E-01	8.54E-01	1.03E-06	4.51E-06	6.52E-03	2.86E-02	4.38E-04	1.92E-03	8.82E-05	3.86E-04	1.95E-03	8.55E-03	1.08E-03	4.74E-03	0.2051	0.8982
Benzo(a)anthracene	1.05E-04	4.60E-04	1.43E-05	6.26E-05	5.22E-06	2.29E-05	7.88E-07	3.45E-06			7.11E-05	3.12E-04	3.24E-05	1.42E-04	0.0002	0.0010
Benzo(a)pyrene	4.90E-06	2.15E-05	1.43E-05	6.26E-05	2.16E-06	9.46E-06	8.82E-08	3.86E-07			0.00E+00	0.00E+00	3.92E-06	1.72E-05	0.0000	0.0001
Benzo(b)fluoranthene	5.00E-05	2.19E-04	3.57E-07	1.56E-06	9.32E-06	4.08E-05	4.65E-08	2.04E-07			0.00E+00	0.00E+00	1.30E-05	5.68E-05	0.0001	0.0003
Benzo(e)pyrene	5.50E-05	2.41E-04	0.00E+00	0.00E+00							1.21E-05	5.28E-05	1.33E-05	5.82E-05	0.0001	0.0004
Benzo(g,h,i)perylene	2.00E-05	8.76E-05	5.88E-10	2.58E-09	4.67E-06	2.05E-05	2.29E-07	1.00E-06			0.00E+00	0.00E+00	3.24E-06	1.42E-05	0.0000	0.0001
Benzo(k)fluoranthene	2.05E-05	8.98E-05	8.82E-10	3.86E-09	1.83E-06	8.02E-06	7.27E-08	3.18E-07			0.00E+00	0.00E+00	3.75E-06	1.64E-05	0.0000	0.0001
Beryllium	0.00E+00	0.00E+00	6.43E-06	2.82E-05											0.0000	0.0000
Bis(2-ethylhexyl)phthalate			7.86E-06	3.44E-05											0.0000	0.0000
Bromomethane									1.35E-05	5.92E-05	2.99E-04	1.31E-03	2.00E-04	8.75E-04	0.0005	0.0022
1,3-Butadiene	0.00E+00	0.00E+00	0.00E+00	0.00E+00			1.83E-05	8.03E-05							0.0000	0.0001
Cadmium	2.10E-03	9.20E-03	4.29E-05	1.88E-04											0.0021	0.0094
Carbon Disulfide	0.00E+00	0.00E+00	0.00E+00	0.00E+00					4.41E-05	1.93E-04	9.76E-04	4.27E-03	2.70E-04	1.18E-03	0.0013	0.0057
Chloroethane/Ethyl Chloride									1.10E-05	4.83E-05	2.44E-04	1.07E-03	4.37E-06	1.91E-05	0.0003	0.0011
Chloromethane/Methyl chloride									6.34E-05	2.78E-04	1.40E-03	6.15E-03	3.12E-04	1.37E-03	0.0018	0.0078
Chromium	1.20E-02	5.26E-02	6.43E-04	2.82E-03											0.0126	0.0554
Hexavalent Chromium	2.25E-04	9.86E-04	0.00E+00	0.00E+00											0.0002	0.0010
Chrysene	9.00E-05	3.94E-04	1.43E-05	6.26E-05	1.28E-05	5.59E-05	1.66E-07	7.25E-07			2.67E-04	1.17E-03	1.76E-04	7.69E-04	0.0006	0.0025
Cobalt	7.50E-03	3.29E-02	1.86E-05	8.13E-05											0.0075	0.0329
Cumene	0.00E+00	0.00E+00	0.00E+00	0.00E+00									2.29E-03	1.00E-02	0.0023	0.0100
Dibenzo(a,h)anthracene	0.00E+00	0.00E+00	5.88E-10	2.58E-09	2.91E-06	1.27E-05	2.73E-07	1.20E-06			0.00E+00	0.00E+00	6.31E-07	2.76E-06	0.0000	0.0000
Dibutylphthalate			1.21E-07	5.32E-07											0.0000	0.0000
Dichlorobenzene	0.00E+00	0.00E+00	5.88E-07	2.58E-06											0.0000	0.0000
Ethyl Benzene	1.20E-01	5.26E-01	0.00E+00	0.00E+00					1.05E-04	4.59E-04	2.32E-03	1.02E-02	5.82E-03	2.55E-02	0.1282	0.5617
Fluoranthene	3.05E-04	1.34E-03	1.57E-07	6.88E-07	3.39E-05	1.48E-04	3.57E-06	1.56E-05			1.91E-04	8.34E-04	8.53E-05	3.73E-04	0.0006	0.0027
Fluorene	5.50E-03	2.41E-02	1.14E-07	5.01E-07	1.08E-04	4.71E-04	1.37E-05	6.00E-05			1.28E-03	5.62E-03	1.31E-03	5.75E-03	0.0082	0.0360
Formaldehyde	1.55E+00	6.79E+00	2.18E-04	9.54E-04	6.63E-04	2.90E-03	5.53E-04	2.42E-03	1.90E-03	8.33E-03	4.21E-02	1.84E-01	1.83E-03	8.02E-03	1.5973	6.9960
Hexane	4.60E-01	2.01E+00	8.82E-04	3.86E-03					2.76E-04	1.21E-03	6.10E-03	2.67E-02	3.12E-03	1.37E-02	0.4704	2.0603
HCl	1.05E-01	4.60E-01	2.36E-02	1.03E-01											0.1286	0.5631
Indeno(1,2,3-cd)pyrene	3.50E-06	1.53E-05	8.82E-10	3.86E-09	3.48E-06	1.52E-05	1.76E-07	7.70E-07			0.00E+00	0.00E+00	8.01E-07	3.51E-06	0.0000	0.0000
Lead	2.70E-01	1.18E+00	1.79E-03	7.82E-03											0.2718	1.1904
Manganese	3.25E-01	1.42E+00	1.79E-04	7.82E-04											0.3252	1.4243
Mercury	1.30E-03	5.69E-03	1.50E-06	6.57E-06											0.0013	0.0057
Methyl Chloroform	2.40E-02	1.05E-01	0.00E+00	0.00E+00									0.00E+00	0.00E+00	0.0240	0.1051
Methyl Ethyl Ketone	1.00E-02	4.38E-02	0.00E+00	0.00E+00					1.08E-04	4.71E-04	2.38E-03	1.04E-02	1.02E-03	4.46E-03	0.0135	0.0592
Methylene Chloride/Dichloromethane									7.44E-07	3.26E-06	1.65E-05	7.21E-05			0.0000	0.0001
2-Methylnaphthalene	8.50E-02	3.72E-01	8.82E-10	3.86E-09							6.69E-03	2.93E-02	4.06E-03	1.78E-02	0.0958	0.4194
3-Methylchloranthrene	0.00E+00	0.00E+00	1.18E-08	5.15E-08											0.0000	0.0000
Naphthalene	3.25E-01	1.42E+00	6.07E-05	2.66E-04	1.09E-03	4.78E-03	3.98E-05	1.74E-04			2.31E-03	1.01E-02	2.13E-03	9.33E-03	0.3306	1.4482
Nickel	6.50E-01	2.85E+00	5.71E-04	2.50E-03											0.6506	2.8495
Pentane	0.00E+00	0.00E+00	1.27E-03	5.58E-03											0.0013	0.0056
Perylene	4.40E-06	1.93E-05	0.00E+00	0.00E+00							3.81E-05	1.67E-04	3.75E-05	1.64E-04	0.0001	0.0004
Phenanthrene	1.15E-02	5.04E-02	1.75E-05	7.67E-05	3.43E-04	1.50E-03	1.38E-05	6.04E-05			2.29E-03	1.00E-02	1.38E-03	6.05E-03	0.0155	0.0681
Phenol			1.00E-07	4.38E-07							0.00E+00	0.00E+00	2.01E-03	8.81E-03	0.0020	0.0088
Phosphorus	6.00E-01	2.63E+00	0.00E+00	0.00E+00											0.6000	2.6280
POM	4.42E-01	1.94E+00	1.25E-04	5.48E-04	1.78E-03	7.78E-03	7.88E-05	3.45E-04			1.45E-02	6.35E-02	1.01E-02	4.43E-02	0.4690	2.0542
Propionaldehyde	6.50E-02	2.85E-01	0.00E+00	0.00E+00											0.0650	0.2847
Pyrene	1.50E-03	6.57E-03	1.14E-07	5.01E-07	3.12E-05	1.36E-04	2.24E-06	9.82E-06			5.59E-04	2.45E-03	2.56E-04	1.12E-03	0.0023	0.0103
Quinone	8.00E-02	3.50E-01													0.0800	0.3504
Selenium	1.20E-03	5.26E-03	7.50E-06	3.29E-05											0.0012	0.0053
Styrene	0.00E+00	0.00E+00	0.00E+00	0.00E+00					1.49E-05	6.52E-05	3.29E-04	1.44E-03	1.52E-04	6.65E-04	0.0005	0.0022
2,3,7,8-TCDD	1.05E-10	4.60E-10	0.00E+00	0.00E+00											0.0000	0.0000
Tetrachloroethene/ Tetrachloroethylene													1.60E-04	7.02E-04	0.0002	0.0007
Toluene	1.45E+00	6.35E+00	1.67E-06	7.30E-06	2.36E-03	1.03E-02	1.92E-04	8.40E-04	1.71E-04	7.49E-04	3.78E-03	1.66E-02	4.37E-03	1.91E-02	1.4609	6.3986
Total PCDD/PCDF	1.50E-06	6.57E-06	8.21E-10	3.60E-09											0.0000	0.0000
Trichloroethene/ Trichloroethylene			0.00E+00	0.00E+00									0.00E+00	0.00E+00	0.0000	0.0000
Xylene	1.00E-01	4.38E-01	0.00E+00	0.00E+00	1.62E-03	7.10E-03	1.34E-04	5.85E-04	7.09E-04	3.10E-03	1.57E-02	6.87E-02	1.02E-02	4.46E-02	0.1283	0.5621
TOTALS:															7.32	32.05

1) POM & Total PCDD/PCDF: Maximum PTE estimates for POM based on polycyclic organic matter mixture as defined by 1900 CAA Amendments. Refer to individual unit emission estimates for compounds included in the mixture. To avoid double counting, the total, maximum PTE estimates do not include POM (i.e., individual compounds are summed separately) or 2, 3, 7, 8-TCDD (included in Total PCDD/PCDF).

APPENDIX 4

TANKS Output Files

TANKS 4.0.9d
Emissions Report - Summary Format
Tank Indentification and Physical Characteristics

Identification

User Identification:	WCI Hot Plant #2_Asphalt Tank
City:	Pocatello
State:	Idaho
Company:	Western Construction, Inc.
Type of Tank:	Horizontal Tank
Description:	Asphalt Storge Tank

Tank Dimensions

Shell Length (ft):		50.00
Diameter (ft):		10.50
Volume (gallons):		30,000.00
Turnovers:		10.00
Net Throughput(gal/yr):		300,000.00
Is Tank Heated (y/n):	Y	
Is Tank Underground (y/n):	N	

Paint Characteristics

Shell Color/Shade:	Gray/Medium
Shell Condition:	Poor

Breather Vent Settings

Vacuum Settings (psig):	0.00
Pressure Settings (psig):	0.00

Meterological Data used in Emissions Calculations: Pocatello, Idaho (Avg Atmospheric Pressure = 12.53 psia)

TANKS 4.0.9d
Emissions Report - Summary Format
Liquid Contents of Storage Tank

WCI Hot Plant #2_Asphalt Tank - Horizontal Tank
Pocatello, Idaho

Mixture/Component	Month	Daily Liquid Surf Temperature (deg F) Avg	Min	Max	Liquid Bulk Temp (deg F)	Vapor Pressure (psia) Avg	Min	Max	Vapor Mol. Weight	Liquid Mass Fract.	Vapor Mass Fract.	Mol. Weight	Basis for Vapor Pressure Calculations
Asphalt TOC	All	270.00	65.00	280.00	280.00	0.0036	0.0000	0.0052	105.0000			0.00	

TANKS 4.0.9d
Emissions Report - Summary Format
Individual Tank Emission Totals

Emissions Report for: Annual

WCI Hot Plant #2_Asphalt Tank - Horizontal Tank
Pocatello, Idaho

	Losses(lbs)		
Components	Working Loss	Breathing Loss	Total Emissions
Asphalt TOC	2.85	15.12	17.97

TANKS 4.0.9d
Emissions Report - Summary Format
Tank Indentification and Physical Characteristics

Identification

User Identification:	WCI Hot Plant #2_Diesel Tank
City:	Pocatello
State:	Idaho
Company:	Western Construction, Inc.
Type of Tank:	Horizontal Tank
Description:	#2 Diesel Storage Tank

Tank Dimensions

Shell Length (ft):		11.00
Diameter (ft):		12.00
Volume (gallons):		6,000.00
Turnovers:		10.00
Net Throughput(gal/yr):		60,000.00
Is Tank Heated (y/n):	N	
Is Tank Underground (y/n):	N	

Paint Characteristics

Shell Color/Shade:	Gray/Medium
Shell Condition	Poor

Breather Vent Settings

Vacuum Settings (psig):	-0.03
Pressure Settings (psig)	0.03

Meterological Data used in Emissions Calculations: Pocatello, Idaho (Avg Atmospheric Pressure = 12.53 psia)

TANKS 4.0.9d
Emissions Report - Summary Format
Liquid Contents of Storage Tank

WCI Hot Plant #2_Diesel Tank - Horizontal Tank
Pocatello, Idaho

Mixture/Component	Month	Daily Liquid Surf. Temperature (deg F) Avg.	Min.	Max.	Liquid Bulk Temp (deg F)	Vapor Pressure (psia) Avg	Min	Max	Vapor Mol. Weight	Liquid Mass Fract.	Vapor Mass Fract.	Mol Weight	Basis for Vapor Pressure Calculations
Distillate fuel oil no. 2	All	56.30	44.55	68.05	49.79	0.0058	0.0037	0.0085	130.0000			188.00	Option 1: VP50 = .0045 VP60 = .0085

TANKS 4.0.9d
Emissions Report - Summary Format
Individual Tank Emission Totals

Emissions Report for: Annual

WCI Hot Plant #2_Diesel Tank - Horizontal Tank
Pocatello, Idaho

	Losses(lbs)		
Components	Working Loss	Breathing Loss	Total Emissions
Distillate fuel oil no. 2	1.07	3.38	4.45

TANKS 4.0.9d
Emissions Report - Summary Format
Tank Indentification and Physical Characteristics

Identification

User Identification:	WCI Hot Plant #2_RFO Tank
City:	Pocatello
State:	Idaho
Company:	Western Construction, Inc.
Type of Tank:	Horizontal Tank
Description:	RFO Storage Tank

Tank Dimensions

Shell Length (ft):		25.00
Diameter (ft):		12.00
Volume (gallons):		15,000.00
Turnovers:		10.00
Net Throughput(gal/yr):		150,000.00
Is Tank Heated (y/n):	N	
Is Tank Underground (y/n):	N	

Paint Characteristics

Shell Color/Shade:	Gray/Medium
Shell Condition	Poor

Breather Vent Settings

Vacuum Settings (psig):	-0.03
Pressure Settings (psig)	0.03

Meterological Data used in Emissions Calculations: Pocatello, Idaho (Avg Atmospheric Pressure = 12.53 psia)

TANKS 4.0.9d
Emissions Report - Summary Format
Liquid Contents of Storage Tank

WCI Hot Plant #2_RFO Tank - Horizontal Tank
Pocatello, Idaho

Mixture/Component	Month	Daily Liquid Surf. Temperature (deg F) Avg.	Min	Max.	Liquid Bulk Temp (deg F)	Vapor Pressure (psia) Avg.	Min.	Max.	Vapor Mol. Weight.	Liquid Mass Fract.	Vapor Mass Fract.	Mol. Weight	Basis for Vapor Pressure Calculations
Residual oil no. 6	All	59.30	44.55	69.05	49.79	0.0000	0.0000	0.0001	100.0000			367.00	Option 1: VP50 = .00003 VP60 = .00004

TANKS 4.0.9d
Emissions Report - Summary Format
Individual Tank Emission Totals

Emissions Report for: Annual

WCI Hot Plant #2_RFO Tank - Horizontal Tank
Pocatello, Idaho

	Losses(lbs)		
Components	Working Loss	Breathing Loss	Total Emissions
Residual oil no. 6	0.02	0.07	0.10

TANKS 4.0.9d
Emissions Report - Summary Format
Tank Indentification and Physical Characteristics

Identification

User Identification:	WCI Hot Plant #2_Asphalt Tank
City:	Pocatello
State:	Idaho
Company:	Western Construction, Inc.
Type of Tank:	Horizontal Tank
Description:	Asphalt Storge Tank

Tank Dimensions

Shell Length (ft):	50.00
Diameter (ft):	10.50
Volume (gallons):	30,000.00
Turnovers:	402.95
Net Throughput(gal/yr):	12,088,608.00
Is Tank Heated (y/n):	Y
Is Tank Underground (y/n):	N

Paint Characteristics

Shell Color/Shade:	Gray/Medium
Shell Condition	Poor

Breather Vent Settings

Vacuum Settings (psig):	0.00
Pressure Settings (psig)	0.00

Meterological Data used in Emissions Calculations: Pocatello, Idaho (Avg Atmospheric Pressure = 12.63 psia)

TANKS 4.0.9d
Emissions Report - Summary Format
Liquid Contents of Storage Tank

WCI Hot Plant #2_Asphalt Tank - Horizontal Tank
Pocatello, Idaho

Mixture/Component	Month	Daily Liquid Surf Temperature (deg F) Avg.	Min	Max.	Liquid Bulk Temp (deg F)	Vapor Pressure (psia) Avg.	Min	Max.	Vapor Mol. Weight.	Liquid Mass Fract.	Vapor Mass Fract.	Mol. Weight	Basis for Vapor Pressure Calculations
Asphalt TOC	All	270.00	65.00	280.00	280.00	0.0039	0.0000	0.0052	105.0000			0.00	

TANKS 4.0.9d
Emissions Report - Summary Format
Individual Tank Emission Totals

Emissions Report for: Annual

WCI Hot Plant #2_Asphalt Tank - Horizontal Tank
Pocatello, Idaho

	Losses(lbs)		
Components	Working Loss	Breathing Loss	Total Emissions
Asphalt TOC	27.69	15.12	42.81

APPENDIX 5

Air Quality Modeling Analysis

WESTERN CONSTRUCTION, INC.
PORTABLE HOT MIX ASPHALT PLANT
IDAHO

AIR QUALITY MODELING ANALYSIS

January 2012

Prepared for

Western Construction, Inc.
P.O. Box 15569
Boise, Idaho 83715

WESTERN CONSTRUCTION, INC.
PORTABLE HOT MIX ASPHALT PLANT
IDAHO
AIR QUALITY MODELING ANALYSIS

TABLE OF CONTENTS

Page

1 INTRODUCTION 1
  1.1 Purpose 1
  1.2 Project Description 1
2 AIR QUALITY STANDARDS AND BACKGROUND CONCENTRATIONS 2
  2.1 NAAQS 2
  2.2 TAPs 3
  2.3 Background Concentrations 4
3 MODELING IMPACT ASSESSMENT 5
  3.1 Overview of the Analysis 5
  3.2 Dispersion Model Used 6
  3.3 Meteorological Data 6
  3.4 Building Downwash 6
  3.5 Terrain Effects 6
  3.6 Emission Sources 6
  3.7 Receptor Grid and Determination of Setback Distances 6
  3.8 Results for Cumulative NAAQS Impact Analyses 7
  3.9 TAPs Analysis 9
4 REFERENCES 12

LIST OF FIGURES

Figure 1: Setback Distance from $PM_{2.5}$ 24-hour at 500 tph Throughput 8

LIST OF TABLES

Table 1: Applicable Regulatory Limits 2
Table 2: ELs, ACC Standards, and AACC Standards for the Acceptable TAP Concentrations 4
Table 3: Background Concentrations 5
Table 4: Background Concentrations for NO_2 and O_3 5
Table 5: Pollutants Averaging Periods and Trigger Values 7
Table 6: Setback Distances from the $PM_{2.5}$ 24-hour Averaging Period as a Function of Asphalt Throughput 7
Table 7: Setback Distances from PM_{10} and NO_2 as a Function of Asphalt Throughput 9
Table 8: Setback Distances from SO_2 as a Function of Asphalt Throughput 9
Table 9: Model Predicted TAP Concentrations and AACC 10

LIST OF ATTACHMENTS

Attachment A: Model Source Input Parameters
Attachment B: AERMOD Model Input and Output Files

WESTERN CONSTRUCTION, INC.
PORTABLE HOT MIX ASPHALT PLANT
IDAHO
AIR QUALITY MODELING ANALYSIS

1 INTRODUCTION

Western Construction, Inc. (WCI) is submitting a Permit to Construct (PTC) (Application) for their portable hot mix asphalt (HMA) plant #2 (Facility) to be operated in Idaho. Enviroscientists, Inc (Enviroscientists) has prepared a non-site-specific air quality impact analysis involving atmospheric dispersion modeling of emissions associated with the portable HMA plant. The modeling analysis is to be incorporated as part of the WCI's application for the Idaho Department of Environmental Quality (IDEQ) PTC Application for the Facility. The Application is being prepared by Centra Consulting, Inc. (CCI).

1.1 Purpose

The purpose of this analysis is to demonstrate that the Facility would not cause or significantly contribute to a violation of National Ambient Air Quality Standards (NAAQS) and any ambient air quality standard pursuant to Idaho Administrative Procedure Act (IDAPA), Rules for the Control of Air Pollution (IDAPA 58.01.01.203.02 and 203.03 [Idaho Air Rules {IAR} Section 203.02 and 203.03]) (IDEQ 2011a). This dispersion modeling analysis report includes a summary of results of the modeling analysis for both criteria pollutants and toxic air pollutants (TAPs).

As per the request of WCI, Enviroscientists performed non-site-specific air quality impact analyses to assure compliance with air quality standards for the new portable HMA plant that is not tied to a specific location; however, the location would be in an area with subtle topography. Results from the atmospheric dispersion modeling were used to establish minimum setback distances between emissions points and the ambient air boundary needed to assure compliance with the applicable standards. The modeling analysis was performed consistent with the IDEQ modeling guidelines (IDEQ 2011b).

Air quality impact analyses are required by IAR to be conducted according to methods outlined in 40 Code of Federal Regulations (CFR) 51, Appendix W (Guideline on Air Quality Models) (EPA 2005). Appendix W requires that facilities be modeled using emissions and operations that are representative of design capacity or as limited by a federally enforceable permit condition. Facility operations information and source parameters were provided by WCI and CCI.

1.2 Project Description

WCI's portable HMA plant is the drum-type mixing plant with maximum production capacity of 500 tons per hour (tph) of HMA. The aggregate is dried, heated, and mixed with the binder (asphalt) in the drum to produce a HMA containing binder and aggregate that meets all the applicable specification. The components of the HMA plants are listed below.

- HMA Drum Dryer
- Asphalt Heater
- Operations Generator

- Night Generator
- Asphalt Tank
- Silo Filling
- Loadout
- Conveying and Screening
- Material Handling

The aggregate from cold feed bins is fed in specific proportions on to the cold-feed conveyor. The aggregate is conveyed into the drum mixer where it is thoroughly mixed with the binder by the rotating action of the drum. From the drum, the HMA is transferred by hot mix conveyor to a surge bin (silo), from which the mixture is loaded into trucks and hauled to the paving site. Generators are used to generate power for the HMA plant operations.

2 AIR QUALITY STANDARDS AND BACKGROUND CONCENTRATIONS

This section identifies applicable air quality standards and background values used to demonstrate compliance.

2.1 NAAQS

If the modeled maximum pollutant impacts to ambient air from the emissions sources associated with the Facility exceed the significant impact levels (SILs) of IAR Section 006 (referred to as a significant contribution in Idaho Air Rules), then a cumulative NAAQS impact analysis is necessary to demonstrate compliance with NAAQS and IAR Section 203.02. A cumulative NAAQS impact analysis for attainment area pollutants involves adding ambient impacts from facility-wide emissions, and emissions from any nearby co-contributing sources, to IDEQ-approved background concentration values that are appropriate for the criteria pollutant/averaging-time at the facility location and the area of significant impact. The resulting maximum pollutant concentrations in ambient air are then compared to the NAAQS listed in Table 1. Table 1 also lists SILs and specifies the modeled value that must be used for comparison to the NAAQS.

Table 1: Applicable Regulatory Limits

Pollutant	Averaging Period	Significant Impact Levels[a] ($\mu g/m^3$)[b]	NAAQS[c] ($\mu g/m^3$)	Modeled Value Used[d]
Particulate Matter with diameter less than 10 microns (PM_{10})[e]	24-hour	5.0	150[f]	Maximum 6th highest[g]
Particulate Matter with diameter less than 2.5 microns ($PM_{2.5}$)[h]	Annual	0.3	15[i]	Maximum 1st highest[j]
	24-hour	1.2	35[k]	Mean of maximum 8th highest
Carbon monoxide (CO)	8-hour	500	10,000[l]	Maximum 2nd highest[m]
	1-hour	2,000	40,000[l]	Maximum 2nd highest[m]
Sulfur Dioxide (SO_2)	3-hour	25	1,300[l]	Maximum 2nd highest[m]
	1-hour	3 ppb (7.8 $\mu g/m^3$)	75 ppb[n] (196 $\mu g/m^3$)	Mean of maximum 4th highest[o]
Nitrogen Dioxide	Annual	1.0	100[p]	Maximum 1st highest[j]

Pollutant	Averaging Period	Significant Impact Levels[a] ($\mu g/m^3$)[b]	NAAQS[c] ($\mu g/m^3$)	Modeled Value Used[d]
(NO_2)	1-hour	4 ppb (7.5 $\mu g/m^3$)	100 ppb[q] (188 $\mu g/m^3$)	Mean of maximum 8th highest[r]

a. IAR Section 006.
b. Micrograms per cubic meter.
c. Incorporated into IAR by reference, as per IAR Section 107.
d. The maximum 1st highest modeled value is always used for the significant impact analysis.
e. Particulate matter with an aerodynamic diameter less than or equal to a nominal ten micrometers.
f. Never expected to be exceeded more than once in any calendar year.
g. Concentration at any modeled receptor when using five years of meteorological data.
h. Particulate matter with an aerodynamic diameter less than or equal to a nominal 2.5 micrometers.
i. Three-year average of annual concentration.
j. Concentration at any modeled receptor.
k. Three-year average of the upper 98th percentile of 24-hour concentrations.
l. Not to be exceeded more than once per year.
m. Concentration at any modeled receptor.
n. Three-year average of the upper 99th percentile of the distribution of maximum daily 1-hour concentrations.
o. Mean (of five years of data) of the maximum of 4th highest daily 1-hour maximum modeled concentrations for each year of meteorological data modeled.
p. Not to be exceeded in any calendar year
q. Three-year average of the upper 98th percentile of the distribution of maximum daily 1-hour concentrations.
r. Mean (of five years of data) of the maximum of 8th highest daily 1-hour maximum modeled concentrations for each year of meteorological data modeled.

2.2 TAPs

IAR Section 161 defines a TAP as any contaminant which is, by its nature, toxic to human or animal life or vegetation and shall not be emitted in such quantities or concentrations that would either individually or in combination with other contaminants, injure or unreasonably affect human or animal life or vegetation. Sections 585 and 586 of the IAR list the TAP non-carcinogenic and carcinogenic pollutants, respectively. Permit requirements for TAPs from new or modified sources are specifically addressed by IAR Section 203.03.

Using the methods to quantify the ambient concentrations for the TAPs as outlined in Section 210, the stationary source would be able to demonstrate that the emissions of TAPs, as defined in Section 161, would not injure or unreasonably affect human or animal life or vegetation. Compliance with all the applicable TAP non-carcinogenic standards and TAP carcinogenic standards, as outlined in IAR Sections 585 and 586, respectively will also demonstrate preconstruction compliance requirements in IAR Section 210.

Per Section 210, if the total project-wide emissions increase of any TAP associated with a new source or modification exceeds screening emission levels (ELs) outlined in either IAR Section 585 (non-carcinogens) or IAR Section 586 (carcinogens), then the ambient impact of the emissions increase must be estimated. If ambient impacts are less than the applicable Acceptable Ambient Concentrations (AACs) for non-carcinogens (IAR Section 585) or the applicable Acceptable Ambient Concentrations for Carcinogens (AACCs) (IAR Section 586), then compliance with TAP requirements has been demonstrated. However, if the ambient impacts are greater than the applicable AACC, then a stationary source needs to complete a Toxic Air

Pollutant Reasonably Available Control Technology (T-RACT) assessment of either existing or potential controls. The T-RACT is an emission based standard that uses the lowest emission of TAPs that a particular source is capable of meeting with the application of control technology that is reasonably available, as determined by the IDEQ, considering technological and economic feasibility. If, based on the assessment, IDEQ determines that the source has T-RACT to control emissions of the source of the carcinogenic TAPs, then the applicable standards are ten times the AACC concentrations outlined in IAR Section 586.

Table 2 shows the ELs, ACC standards, and AACC standards for the TAPs that have been identified as emitted from the Project.

Table 2: ELs, ACC Standards, and AACC Standards for the Acceptable TAP Concentrations

TAPs	EL (lb/hr)	AAC (mg/m^3)
Non-Carcinogens		
Hydrochloric Acid	0.05	0.375
Phosphorus	0.007	0.005
Propionaldehyde	0.0287	0.0215
Quinone	0.027	0.02
Carcinogens		
TAPs	**EL (lb/hr)**	**AACC (µg/m^3)**
Acenaphthene (PAH)	9.1E-05	1.4E-02
Acenaphthylene (PAH)	9.1E-05	1.4E-02
Acetaldehyde	3.0E-03	4.5E-01
Anthracene (PAH)	9.1E-05	1.4E-02
Arsenic Compounds	1.5E-06	2.3E-04
Benzene	8.0E-04	1.2E-01
Benzo(a)pyrene	2.0E-06	3.0E-04
Cadmium and Compounds	3.7E-06	5.6E-04
Chromium 6+	5.6E-07	8.3E-05
Dioxins/furans	1.5E-10	2.2E-08
Fluorene (PAH)	9.1E-05	1.4E-02
Formaldehyde	5.1E-04	7.7E-02
Methyl Naphthalene	9.1E-05	1.4E-02
Naphthalene (PAH)	9.1E-05	1.4E-02
Nickel	2.7E-05	4.2E-03
Penanthrene (PAH)	9.1E-05	1.4E-02
POM	9.1E-05	1.4E-02
Pyrene (PAH)	9.1E-05	1.4E-02

PAH- Polyaromatic Hydrocarbons, POM- Polycyclic Organic matter

2.3 Background Concentrations

Background concentrations are used in the cumulative NAAQS impact analyses to account for impacts from sources not explicitly modeled. For this analysis, background concentrations for 24-hour $PM_{2.5}$, 24-hour PM_{10}, 1-hour SO_2, 1-hour NO_2, and 1-hour Ozone (O_3) were provided by IDEQ. Table 3 lists appropriate background concentrations provided by IDEQ along with appropriate background concentrations for rural Idaho areas. Table 4 lists appropriate background concentrations for 1-hour NO_2 and 1-hour O_3 varied by hour of day. These

background concentrations are also provided by the IDEQ and are used directly in the model. Background values for TAPs are considered to be zero.

Table 3: Background Concentrations

Pollutant	Averaging Period	Background Concentration ($\mu g/m^3$)
PM_{10}	24-hour	73
$PM_{2.5}$	24-hour	21.3
CO	1-hour	3,600
	8-hour	2,300
SO_2	1-hour	50
	3-hour	34
NO_2	Annual	17

Table 4: Background Concentrations for NO_2 and O_3

Hour of Day	NO_2 ($\mu g/m^3$)	O_3 (ppb)
1	50.0	27.9
2	48.1	28.5
3	45.7	26.8
4	46.2	24.1
5	56.7	22.1
6	54.9	21.4
7	56.7	19.7
8	60.1	22.8
9	54.9	30.5
10	48.1	37.8
11	39.5	43.8
12	32.6	48.8
13	34.3	53.0
14	34.3	55.0
15	37.8	57.1
16	46.4	57.6
17	49.8	57.1
18	61.8	55.1
19	70.4	49.0
20	85.9	39.0
21	79.0	30.9
22	75.5	28.5
23	63.5	29.4
24	49.8	29.6

3 MODELING IMPACT ASSESSMENT

This analysis used non-site-specific full impact analyses to demonstrate compliance with IAR Section 203.02.

3.1 Overview of the Analysis

The IDEQ has determined that a non-site specific analysis of the proposed HMA plant would be a reasonable representation of the potential air quality impacts. This is because of the portable

nature of HMA plants and this type of modeling analysis allows for the establishment of setback distances between locations of emission points and the property boundary and thus maintain ambient air quality. Established setback distances are the minimal distances between any emissions point and the ambient air boundary needed to assure compliance with the standards, when considering the impact of the HMA plant, along with any co-contributing sources, and the appropriate background value.

3.2 Dispersion Model Used

IAR Section 202.02 requires that estimates of ambient concentrations be based on air quality models specified in 40 CFR 51, Appendix W (Guideline on Air Quality Models).The current United States Environmental Protection Agency (EPA) preferred model is AERMOD, and version 11103 was used. AERMOD is the approved model for near-field new source review. It was used as recommended in EPA's Guideline on Air Quality Models and consistent with the IDEQ's Dispersion Modeling Guidelines.

3.3 Meteorological Data

The meteorological data set for five years (2000 to 2005) were used in the analysis. Surface data from Minidoka, Idaho and upper air data from Boise, Idaho, were provided by the IDEQ.

3.4 Building Downwash

Determination of building configuration was difficult because of the portable nature of the facility. However, downwash effects caused by the generator housing were accounted for by including the generator structure as a building with dimensions of 2.5 meters by 2.5 meters and 2.5 meters high.

3.5 Terrain Effects

Terrain effects on dispersion were not considered in this non-site specific analyses. Therefore flat terrain was assumed for the analysis, because most emission points associated with HMA plants are near ground level and the surrounding area is typically flat.

3.6 Emission Sources

Emission rates of criteria pollutants and TAPs were calculated for the HMA plant. The emission sources parameters such as stack height, stack internal diameter, exit gas velocity and temperature are consistent with the information provided by WCI. Attachment A provides a table of modeled source parameters and associated emission rates for criteria pollutants and TAPs at a maximum throughput of 500 tph, which was used in the modeling.

3.7 Receptor Grid and Determination of Setback Distances

Setback distances are the closest distance between the property boundary and the emissions release point of any emissions source where ambient air quality can be maintained. To establish a setback distance, a trigger value for the modeling analysis was determined for a pollutant and averaging period. This value, when combined with the appropriate background concentration,

indicates an exceedance of a standard. The trigger values were calculated by subtracting the background value from the standard. Table 5 lists the trigger values for the pollutants and their averaging periods based on the background concentrations provided by the IDEQ. The trigger values for 24-hour PM_{10}, 24-hour $PM_{2.5}$, and 1-hour SO_2 are calculated by subtracting the background values from the standards. The trigger value for 1-hour NO_2 is same as the ambient standard because the background concentrations for NO_2 provided in Table 5 are used directly in the model and the modeled concentration is already the combination of model predicted concentration and the appropriate background concentration.

Table 5: Pollutants Averaging Periods and Trigger Values

Pollutant	Averaging Period	Trigger Values ($\mu g/m^3$)
PM_{10}	24-hour	77.0
$PM_{2.5}$	24-hour	13.7
SO_2	1-hour	146.0
NO_2	1-hour	188.0

Setback distances were determined by first modeling the HMA plant using a dense receptor grid. A circular grid with five meter receptor spacing, extending out to 300 meters and a coarse grid with ten meter receptor spacing, extending out to 400 meters were used. All receptors with modeled concentrations equal or greater than the trigger value were plotted. This effectively gave a plot of receptors where the standard exceeded for that pollutant and averaging period. The controlling receptor, which is the next receptor downwind of the furthest trigger value receptor on the concentration plot, was determined. The minimum setback distance was calculated as the distance between an emissions point and the controlling receptor.

3.8 Results for Cumulative NAAQS Impact Analyses

The modeling analysis determined setback distances from the non-site-specific modeling results for each proposed operating scenario, criteria pollutant, and averaging period. The model runs were preformed for 500 tph, 450 tph, 400 tph, and 350 tph maximum throughputs and the setback distances were determined for each scenario. Figure 1 show the setback distance determined from $PM_{2.5}$ 24-hour averaging period, which was the pollutant, based on 500 tph maximum throughput that had the greatest setback distance. Emissions points are grouped in a cluster at the center of the modeling grid. The contour line shows the trigger value concentration for $PM_{2.5}$ 24-hour averaging period. The estimated setback distances determined from the pollutant at different throughputs are listed in Table 6.

Table 6: Setback Distances from the $PM_{2.5}$ 24-hour Averaging Period as a Function of Asphalt Throughput

Maximum Throughput (tph)	Governing Pollutant	Setback Distance (feet)
500	24- hour $PM_{2.5}$	590.55
450	24- hour $PM_{2.5}$	531.50
400	24- hour $PM_{2.5}$	488.85
350	24- hour $PM_{2.5}$	429.79

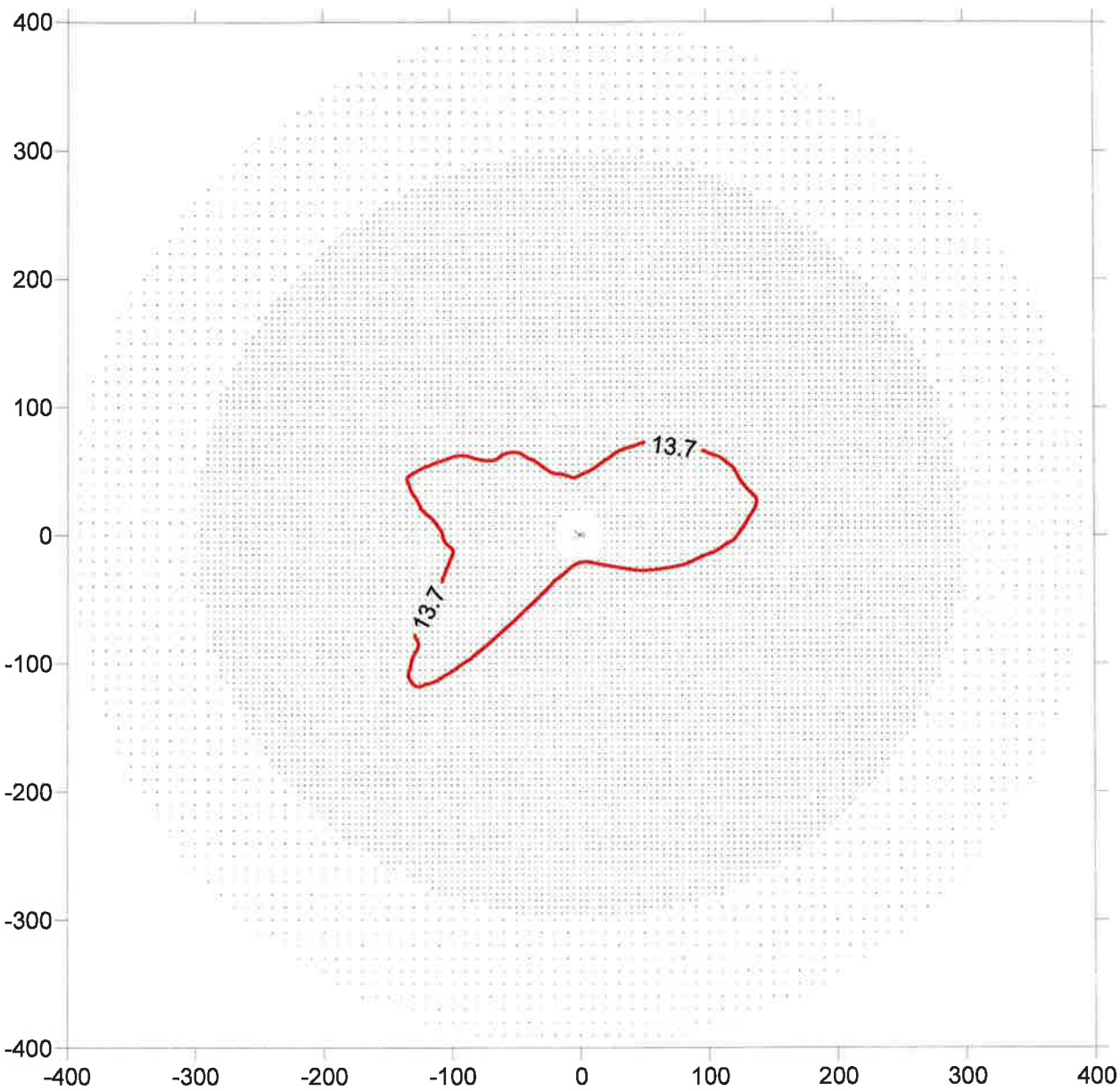

EXPLANATION
Red Line- Maximum Extent of 13.7 micrograms per cubic meter PM2.5 24-hour Contour
Emission Sources located at the center

Figure 1

Setback Distance of 180 meters (590.55 ft)

Hot Mix Asphalt Plant
Western Constuction, Inc.

The 24-hour PM_{10} impacts were also assessed to determine the setback distance. Modeling for 1-hour NO_2 was performed consistent with the EPA's revised primary standard for nitrogen dioxide published in the Federal Register on February 9, 2010 with an effective date of April 12, 2010. A Tier 3-Plume Volume Molar Ratio Method (PVMRM) was implemented in the AERMOD model. The PVMRM determines the conversion rate for NO_x to NO_2 based on a calculation of the number of NO_x moles emitted into the plume, and the number of O_3 moles contained within the volume of the plume between the source and receptor. Consistent with the EPA's dispersion modeling guidelines, a NO_2/NO_x stack ratio of 0.5 and a default ambient NO_2/NO_x ratio of 0.9 were used. Hourly O_3 concentrations from Table 3 were used as temporally varying O_3 background values varying by hour of day. Table 7 lists setback distances determined from 24-hour PM_{10} and 1-hour NO_2 for each throughput scenario.

Table 7: Setback Distances from PM_{10} and NO_2 as a Function of Asphalt Throughput

Maximum Throughput (tph)	Governing Pollutant	Setback Distance (feet)
500	24-hour PM_{10}	524.93
450	24-hour PM_{10}	465.88
400	24-hour PM_{10}	442.91
350	24-hour PM_{10}	360.89
500	1-hour NO_2	328.08
450	1-hour NO_2	334.65
400	1-hour NO_2	314.96
350	1-hour NO_2	328.08

The maximum impact from Annual NO_2, including background, was 71.97 $\mu g/m^3$, which, irrespective of setback, was below the trigger value.

The impacts from SO_2 1-hour and 3-hour averaging periods were also evaluated to determine the setback distances for the HMA plant. The maximum impact from 3-hour SO_2, which, irrespective of setback, was below the trigger value. Table 8 lists setback distances determined from 1-hour SO_2 for each throughput scenario.

Table 8: Setback Distances from SO_2 as a Function of Asphalt Throughput

Maximum Throughput (tph)	Governing Pollutant	Setback Distance (feet)
500	1- hour SO_2	170.60
450	1- hour SO_2	167.32
400	1- hour SO_2	164.04
350	1- hour SO_2	164.04

This analysis used facility-wide emissions to determine setback distance for the HMA plant and demonstrate compliance with the NAAQS. The HMA plant will be in compliance with the NAAQS by maintaining a minimum setback distance of 590.55 feet, based on the $PM_{2.5}$ 24-hour analysis, at all times during operations.

3.9 TAPs Analysis

The HMA plant will result in emissions of TAPs. Per IAR Section 210.02, IDEQ allows use of a 24-hour average concentrations for TAPs listed in Section 585 and five year annual average

concentrations for TAPs listed in Section 586 for the demonstration of compliance with ACC and AACC standards, respectively. Five years of meteorological data were used to predict annual and 24-hour modeled concentrations.

TAP emissions from the HMA plant were calculated and compared to the applicable ELs. TAPs that exceed the ELs were included in the TAP modeling analysis. The model runs were performed for the maximum throughput of 500 tph. Four non-carcinogens and 18 carcinogens exceed the ELs and were therefore modeled.

The model predicted 24-hour average concentrations for the four non-carcinogens, which were then compared to the AAC. The estimated impacts of the four non-carcinogens were all below AAC at all the modeled receptors outside of the setback distance. The model predicted annual average concentrations for the 18 carcinogens were compared to the AACC. Not all the 18 carcinogens were below the AACC. Therefore, a T-RACT assessment was needed to demonstrate compliance with AACC standards for those specific carcinogens. Fuel specifications and a baghouse have been accepted by the IDEQ as T-RACT for carcinogenic metals emissions. Good combustion practices, good maintenance of control equipment (i.e., the baghouse), and the use of a covered conveyor from the drum dryer to the HMA silos have been accepted as T-RACT for carcinogenic organics and acids. Therefore, a standard of ten times the AACC is applicable for this source. Additionally, the generators will be moved periodically, and thus qualify for the short-term impact adjustment of ten times the AACC, as per IAR Section 210.15. After the implementation of T-RACT assessment, all 18 carcinogens were below the AACC. Table 9 is a summary of carcinogenic TAP emissions and comparison to AACC standards.

Table 9: Model Predicted TAP Concentrations and AACC

TAPs	Averaging Period	Modeled Concentrations ($\mu g/m^3$)	AACC	T-RACT	Compliance Status
Acenaphthene (PAH)	period	7.37E-03	1.4E-02	No	Yes
Acenaphthylene (PAH)	period	8.60E-04	1.4E-02	No	Yes
Acetaldehyde	period	2.42E-02	4.5E-01	No	Yes
Anthracene (PAH)	period	2.01E-03	1.4E-02	No	Yes
Arsenic Compounds	period	1.17E-02	2.3E-04	Yes	Yes
Benzene	period	4.25E-02	1.2E-01	No	Yes
Benzo(a)pyrene	period	8.20E-04	3.0E-04	Yes	Yes
Cadmium and Compounds	period	2.34E-03	5.6E-04	Yes	Yes
Chromium 6+	period	1.00E-05	8.3E-05	No	Yes
Dioxins/furans	period	0.00E-00	2.2E-08	No	Yes
Fluorene (PAH)	period	2.20E-02	1.4E-02	Yes	Yes
Formaldehyde	period	9.62E-02	7.7E-02	Yes	Yes
Methyl Naphthalene	period	6.68E-02	1.4E-02	Yes	Yes
Naphthalene (PAH)	period	3.74E-02	1.4E-02	Yes	Yes
Nickel	period	3.12E-02	4.2E-03	Yes	Yes
Penanthrene (PAH)	period	2.34E-02	1.4E-02	Yes	Yes
POM	period	5.12E-03	1.4E-02	No	Yes
Pyrene (PAH)	period	4.28E-03	1.4E-02	No	Yes

PAH- Polyaromatic Hydrocarbons, POM- Polycyclic Organic matter

This analysis used facility-wide TAP emissions to evaluate compliance with the applicable standards and the results did not affect setbacks since the impacts, based on a standard ten times the AACC for carcinogenic TAPs were inside the setback distance used for the analysis (Section 3.8). This analysis demonstrates preconstruction compliance with the NAAQS and the TAPs ambient standards, based on the application of T-RACT. The AERMOD model input and output files for the analysis are attached to Attachment B of this report.

4 REFERENCES

Environmental Protection Agency (EPA). 2005. *Revision to the Guideline on Air Quality Models: Adoption of a Preferred General purpose (Flat and Complex Terrain) Dispersion Model and Other Revisions*; Final Rule

State of Idaho, Department of Environmental Quality (IDEQ). 2011a. *Rules for the Control of Air Pollution in Idaho*

State of Idaho, Department of Environmental Quality (IDEQ). 2011b. *Guideline for Performing Air Quality Impact Analyses*

ATTACHMENT A

MODEL SOURCE INPUT PARAMETERS

Point Sources

Emissions Unit Description	Model Source ID	UTM East (m)	UTM North (m)	Elevation (m)	Stack Height (m)	Stack Temperature (°K)	Emission Velocity (m/s)	Stack Diameter (m)	PM_{10} Emission Rate (g/s)	$PM_{2.5}$ Emission Rate (g/s)	NOx Emission Rate (g/s)	SO_2 Emission Rate (g/s)	CO Emission Rate (g/s)
HMA Drum Dryer		375484.876	4753669.464	4451	12.6492	408.15	24.7520	1.3208	1.4859	0.7292	3.4650	3.6540	8.2643
Asphalt Heater		375456.638	4753437.93	4407	3.3528	510.9278	0.3528	0.3438	0.0218	0.0008	0.0090	0.0241	0.0052
Operations Generator		375416.07	4753389.294	4420	3.81	768.7056	75.9264	0.2286	0.0497	0.0589	1.5876	0.0016	0.8700
Night Generator		375807.018	4753614.256	4458	1.8288	810.9278	36.0684	0.0762	0.0056	0.0056	0.1041	0.0001	0.0694
Storage Tanks		376042.944	4753518.654	4459	3.9624	435.9278	3.62E-05	0.3438	0.0000	0.0000	0.0000	0.0000	0.0034
Silo Filling		376305.463	4753514.227	4463	N/A	N/A	N/A	N/A	0.0000	0.0000	0.0000	0.0000	0.0000
Loadout		376295.815	4752752.23	4451	3.5052	346.0	0.1	3.0	0.0329	0.0329	0.0000	0.0000	0.0851

Volume Sources

Emissions Unit Description	Model Source ID	UTM East (m)	UTM North (m)	Elevation (m)	Release Height (m)	Initial Lateral Dimension (σ_{y0})	Initial Vertical Dimension (σ_{z0})	PM_{10} Emission Rate (g/s)	$PM_{2.5}$ Emission Rate (g/s)
Conveying and Screening		376094.662	4752740.428	4419	7.01	7.09	1.98	0.1331	0.0280
Material Handling		376094.662	4752740.428	4419	4.11	7.09	1.98	0.0462	0.0070

585 Non-Carcinogens			
HCL Emission Rate (g/s)	Phosphorus Emission Rate (g/s)	Propionaldehyde Emission Rate (g/s)	Quinone Emission Rate (g/s)
6.89E-03	9.19E-04	4.27E-03	5.25E-03
2.97E-03			

586 Carcinogens																	
Acenapthene Emission Rate (g/s)	Acenapthylene Emission Rate (g/s)	Acetaldehyde Emission Rate (g/s)	Anthracene Emission Rate (g/s)	Arsenic Emission Rate (g/s)	Benzene Emission Rate (g/s)	Benzopyrene Emission Rate (g/s)	Cadmium Emission Rate (g/s)	Hex Chrome Emission Rate (g/s)	Dioxins Emission Rate (g/s)	Fluorene Emission Rate (g/s)	Formaldehyde Emission Rate (g/s)	Methyl Napthlene Emission Rate (g/s)	Napthlene Emission Rate (g/s)	Nickel Emission Rate (g/s)	Phenanthrene Emission Rate (g/s)	POM Emission Rate (g/s)	Pyrene Emission Rate (g/s)
4.45E-05	3.78E-04	2.23E-02	5.89E-05	9.62E-06	6.76E-03	1.68E-07	7.04E-06	7.73E-06	5.09E-11	2.33E-04	5.47E-02	3.15E-03	1.12E-02	1.08E-03	4.73E-04	2.10E-05	7.07E-05
2.39E-07	9.00E-08		8.10E-08	2.70E-05	1.30E-07	1.80E-06	5.40E-06		1.72E-13	1.44E-08	2.75E-05	1.48E-09	7.65E-06	7.20E-05	2.21E-06	5.40E-06	1.44E-08
1.46E-06	2.88E-06	7.85E-06	3.83E-07		2.42E-04	8.01E-08				3.99E-06	2.46E-05		4.05E-05		1.27E-05	1.40E-06	1.16E-06
8.39E-06	2.99E-07	4.53E-05	1.11E-07		5.51E-05	1.11E-08				1.73E-06	6.97E-05		5.01E-06		1.74E-06	2.03E-07	2.82E-07
					3.03E-06						6.53E-05						
1.52E-05	1.64E-06		4.10E-06		3.71E-05	1.35E-07				4.51E-05	6.29E-05	1.39E-04	7.32E-05		4.74E-05	7.90E-06	8.78E-06

ATTACHMENT B

AERMOD MODEL INPUT AND OUTPUT FILES
(refer to enclosed CD)