NEW ENERGY ONE, LLC
500 E Overland Rd
Meridian, Idaho 83642
208.947.4519

RECEIVED
OCT 28 2011
DEQ
By R. Greenwood

RECEIVED
OCT 28 2011
DEPARTMENT OF ENVIRONMENTAL QUALITY
STATE A Q PROGRAM

October 20, 2011

Mr. William Rogers
Air Quality and Permits Manager
Idaho Department of Environmental Quality
1410 North Hilton
Boise, Idaho 83706

Re: Application for Pre-Permit Construction, New Energy One Rock Creek Biogas Project, Twin Falls County, Idaho

Dear Mr. Rogers:

New Energy One proposes to modify Permit to Construct P-2010.0076 for the renewable energy biogas project at the existing Rock Creek Dairy in Twin Falls County, Idaho. New Energy One intends to begin construction of the facility within 15 days of submittal of this application. Therefore, we request permission for Pre-Permit Construction in accordance with Part 213 of Idaho Rules for the Control of Air Pollution (IDAPA 58.01.01.213). The enclosed PTC application conforms to the January 2001 Idaho Department of Environmental Quality (DEQ) *Pre-Permit Construction Approval Guidance Document.*

The required pre-application meeting was held on May 4, 2011 with representatives of DEQ. The required public information meeting will be held on November 1, 2011. A copy of the notice announcing this meeting is enclosed with this PTC application.

We have determined that construction of this facility is eligible for Pre-Permit Construction in that the proposed modification of the New Energy One facility is not a major facility or a major modification, we are not proposing to use offsets or netting, and emissions from the facility are not going to impact air quality related values in a Class I area.

We request a facility draft permit for our review prior to issuance of the permit for public review. By this application, New Energy One certifies that it will comply with all limitations, operating requirements, monitoring requirements, and reporting requirements described in the enclosed application. Also, pursuant to Idaho Rules (IDAPA 58.01.01.123), I certify that, based on information and belief formed after reasonable inquiry, the statements and information in this application are true, accurate, and complete.

NEW ENERGY
ONE, LLC

500 E Overland Rd
Meridian, Idaho 83642
208.947.4519

I appreciate your assistance in moving this project forward on such short notice. Please feel free to call me at (208) 947-4519 or Mr. Troy Riecke at (208) 284-6169 if you have any questions.

Sincerely,

Jay Kesting

cc: Troy Riecke – Millennium Science & Engineering, Inc.

Millennium Science & Engineering, Inc.

# Pre-Permit Construction Approval and Permit to Construct Modification Application

**New Energy One, LLC**

**Rock Creek Biogas Project**

**Twin Falls County, Idaho**

**October 26, 2011**

**Prepared for:**

New Energy One, LLC
400 East Overland Road
Meridian, Idaho 83642

**Prepared by:**

Millennium Science & Engineering, Inc.
1555 Shoreline Drive, Suite 150
Boise, Idaho 83702
(208)345-8292

## TABLE OF CONTENTS

Section 1 Process Description ..... 1
Section 2 Process Flow Diagram ..... 4
Section 3 Applicable Requirements ..... 7
Section 4 Emission Estimates ..... 16
Section 5 Facility Classification ..... 25
Section 6 Plot Plan ..... 27
Section 7 Ambient Impact Assessment ..... 30

**Appendices**

Appendix 1 Emission Calculations and Vendor Supplied Equipment Information
Appendix 2 Copy of Public Meeting Notice
Appendix 3 Modeling Protocol and IDEQ Response
Appendix 4 Electronic Copy of Model Input/Output
Appendix 5 Permit to Construct Application
Appendix 6 Pre-Permit Construction Application Checklist

# Section 1 – Process Description

## 1.0 Introduction

New Energy One, LLC requests modification of their existing Permit to Construct Number 2010.0076 issued March 30, 2011. The project is located at the Rock Creek Dairy in Filer, Idaho. The location of the site is shown in Figures 2 and 3 (Section 6). This application is a formal request for Pre-Permit Construction Approval as allowed under IDAPA 58.01.01.213.

## 1.1 Proposed Modification

The proposed modification will include the following:

1.) Install two (2) CAT G3520C gensets instead of the one (1) CAT G3520C genset and three (3) CAT 3412 gensets originally permitted. The reason for this change is because two gensets of the same size will be easier to operate and will operate more efficiently, once full biogas production is achieved, than the permitted gensets. The original configuration with three smaller gensets was proposed because it was thought at the time of the permit that a large genset could not be turned down low enough for the initial startup of a digester. Recent projects have demonstrated that these large gensets can be turned down sufficiently to support the digester startup process.

2.) Install iron sponge filter to reduce the biogas hydrogen sulfide ($H_2S$) concentrations to 700 ppm. This change is primarily to protect the engine from damage associated with elevated $H_2S$ concentrations but also to provide additional protection against exceedance of sulfur dioxide ($SO_2$) air quality standards.

## 1.2 Process Description

Manure from the dairy will be directed to a wastewater pretreatment system to remove inorganics and produce a manure wastewater stream of optimum solids content. The manure wastewater will be pumped into an anaerobic digestion system where the natural digestion process will produce methane rich biogas. The digestion system will consist of a series of above ground completely mixed reactors that retain the manure as it is anaerobically processed. The biogas released through the anaerobic process will be collected, treated in an iron sponge to reduce $H_2S$ concentrations, and then directed to the combustion sources. The facility will have two genset reciprocating internal combustion engines, one small boiler, and a flare that can accept the biogas produced by the digester system. The gensets will produce electricity that will be sold to the Idaho Power Company. The boiler will produce heat to maintain optimum conditions for the anaerobic process. The post digester solids are dewatered and used for cattle bedding and/or soil amendment. The digester waste water will be utilized for irrigation and fertilizer for farm operations. A process flow diagram is presented in Section 2 (Figure 1).

The proposed anaerobic digester renewable energy system will be operated by New Energy One on property leased from the Rock Creek Dairy. Rock Creek Dairy will operate the dairy and manage the solids and wastewater generated by the process.

Air emissions from the system are released through the individual stacks associated with each genset and the boiler. The flare will be used in the event the generators are taken offline. The gensets, boiler, and the flare emissions will result in criteria pollutant emissions of carbon monoxide (CO), particulate matter ($PM_{10}$ and $PM_{2.5}$), nitrogen oxides (NOx), sulfur dioxide ($SO_2$) and volatile organic compounds (VOC). The combustion equipment will also emit toxic air pollutants (TAPs).

# Section 2 – Process Flow Diagram

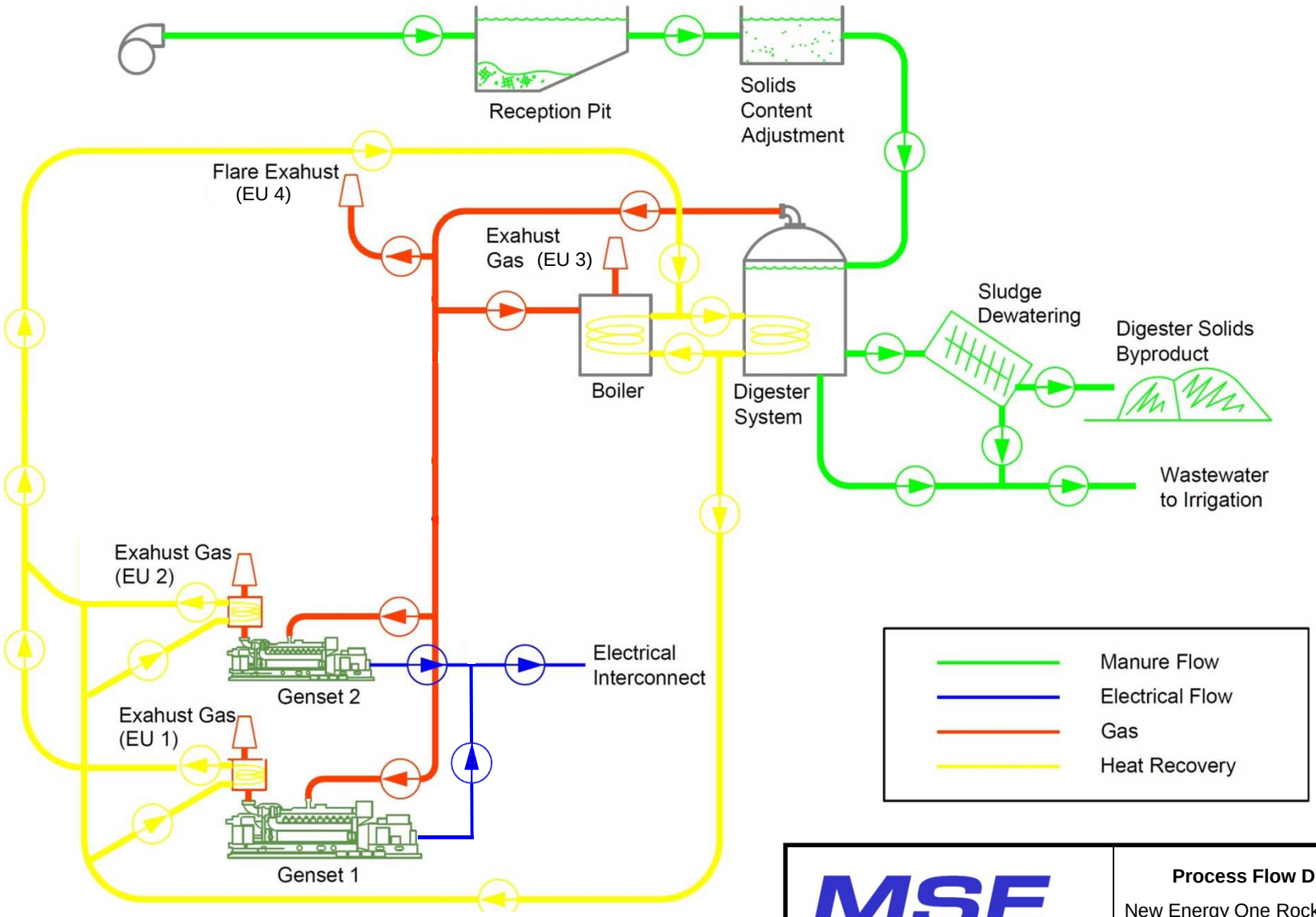


MSE
Millennium Science & Engineering, Inc.

**Process Flow Diagram**

New Energy One Rock Creek Dairy Biogas Project

2175 E 3500 N
Filer, Idaho

| | | | |
|---|---|---|---|
| | **9-6-11** | | **Figure 1** |

# Section 3 – Applicable Requirements

## 3.0 Applicable Requirements

Regulations applicable to the proposed facility are discussed in this section.

## 3.1 Non-Major Facility Designation

The facility is not considered a major facility and is not considered a major modification. The proposed modification will not cause an increase in criteria pollutant emissions greater than 10 percent of the Significant emission rates listed in IDAPA 58.01.01.006.106. The detailed emission calculations are included in Appendix 1.

The proposed modification will cause an increase in emissions of acrolein, a Hazardous Air Pollutant (HAP), but this increase is very small (0.028 lb/hr) and will not increase the annual average value. The proposed modification is not considered a major source for HAP emissions. The proposed facility is located in an area that has not been classified as nonattainment for any pollutants and therefore is not subject to a major facility designation due to its physical location.

## 3.2 Federal Requirements

The following includes the rules and regulations reviewed in preparation of this PTC application.

### 3.2.1 40 CFR § 52 - Prevention of Significant Deterioration (PSD)

The facility is not a PSD major facility and does not belong to any designated source category, therefore PSD review is not applicable.

### 3.2.2 40 CFR § 60 - New Source Performance Standards (NSPS)

<u>40 CFR § 60-Subpart JJJJ – Standards of Performance for Stationary Spark Ignition Internal Combustion Engines</u>

Affected Units:
EU1 – Cat 3520
EU2 – Cat 3520

Title 40 CFR Part 60, Subpart JJJJ is applicable to this project. The applicability of SubPart JJJJ is dependent upon the date construction of the gensets commenced. EPA defines the of the regulations that "*for the purposes of this subpart, the date that construction commences is the date the engine is ordered by the owner or operator* ". The Model 3520 engine originally proposed for this project was ordered by Western States Equipment Company prior to July 1, 2007. The engine has been maintained in inventory by Western States Equipment Company since they were received from the manufacturer. However, 40 CFR §60.4236 indicates that any engine greater than 500 HP installed after July 1, 2009 must meet the applicable emission requirements in Table 1 of the rule and restated in Table 2-1 below. The second Model 3520 engine proposed in this modification will be manufactured in 2011 and will meet requirements listed in Table 2-1.

**Table 2-1. Summary of 40 CFR Subpart JJJJ Table 1**

| Engine Type and Fuel | Maximum Engine Power | Manufacturer Date | Emission Standards[a] | | | | | |
|---|---|---|---|---|---|---|---|---|
| | | | (g/HP-hr) | | | ($ppm_{vd}$ at 15% O2) | | |
| | | | NOx | CO | VOC[b] | NOx | CO | VOC[b] |
| Landfill/Digester Gas Lean Burn | 500<HP<1,350 | 1/1/2008 | 3.0 | 5.0 | 1.0 | 220 | 610 | 80 |
| | | 1/1/2010 | 2.0 | 5.0 | 1.0 | 150 | 610 | 80 |

[a] Owners and operators of stationary non-certified SI engines may choose to comply with the emission standards in units of either g/HP-hr or $ppm_{vd}$ at 15% O2.
[b] For the purposes of this subpart, when calculating emissions of volatile organic compounds (VOC), emission of formaldehyde should not be included.

The two gensets meet the established emission standards (refer to the equipment cut-sheets in Appendix 1 for documentation of equipment emission ratings).

<u>40 CFR § 60-Subpart Dc – Standards of Performance for Small Industrial-Commercial-Institutional Steam Generating Units</u>

Affected Units:
EU3 – Boiler

Subpart Dc applies to steam generating units between 10 MMbtu/hr and 100 MMbtu/hr. The proposed boiler has a rated capacity less than 10 MMbtu/hr and therefore Subpart Dc does not apply.

<u>40 CFR § 60-Subpart IIII – Standards of Performance for Stationary Compression Ignition Internal Combustion Engines</u>

No affected stationary compression ignition internal combustion engine sources are proposed for this permit action.

### 3.2.3 40 CFR § 61 - National Emission Standards for Hazardous Air Pollutants (NESHAPs) & Maximum Achievable Control Technology (MACT)

There are no applicable NESHAPs or MACT for this facility.

## 3.3 State Requirements

Applicable state requirements include the following. All citations refer to specific sections of IDAPA 58.01.01, Rules for the Control of Air Pollution in Idaho.

*123. CERTIFICATION OF DOCUMENTS.*

All documents, including but not limited to, application forms for permits to construct, application forms for operating permits, progress reports, records, monitoring data, supporting information, testing reports or compliance certifications submitted to the Department shall contain a certification by a responsible official.

*128. CONFIDENTIAL INFORMATION*

Not applicable as no confidential information is being submitted.

*130. STARTUP SHUTDOWN, SCHEDULED MAINTENANCE, SAFETY MEASURES, UPSET AND BREAKDOWN*

If an excess emission event occurs during startup shutdown, scheduled maintenance, safety measures, upset or breakdown, the facility will comply with IDAPA 58.01.01.130 through IDAPA 58.01.01.136. A written report for each excess emission event will be submitted to the Department within 15 days after the beginning of the event. The records will be maintained onsite for 5 years.

*156. TOTAL COMPLIANCE*

The facility understands that when more than one section of the rules applies then all such rules must be met to be considered in compliance.

*157. TEST METHODS AND PROCEDURES*

Source testing performed at the facility will be conducted in accordance with the requirements of this rule.

*201. PERMIT TO CONSTRUCT REQUIRED*

Affected Units:
EU1 – Cat 3520
EU2 – Cat 3520
EU3 – Boiler
EU4 – Flare

The facility already has a Permit to Construct for EU1, EU3, and EU4. This permit modification application is to allow construction of EU2. The facility will obtain a permit to construct from the Department which satisfies the requirements of Sections 200 through 208. The proposed project does not meet the permit to construct exemption criteria contained in Sections 220 through 223 of the Rules.

*203. PERMIT REQUIREMENTS FOR NEW AND MODIFIED STATIONARY SOURCES*

Affected Units:
EU1 – Cat 3520
EU2 – Cat 3520
EU3 – Boiler
EU4 – Flare

No new permit conditions are anticipated as a result of the proposed modification

*210. DEMONSTRATION OF PRECONSTRUCTION COMPLIANCE WITH TOXIC STANDARDS*

*210.01. Identification of Toxic Air Pollutants.*

Affected Units:
EU1 – Cat 3520
EU2 – Cat 3520
EU3 – Boiler
EU4 – Flare

All TAP emitted by these emission units are identified. Appendix 1 lists all potential TAP emissions.

*210.02. Quantification of Emission Rates*

Affected Units:
EU1 – Cat 3520
EU2 – Cat 3520
EU3 – Boiler
EU4 – Flare

Emission rates of all TAP were estimated, summaries of calculated emission rates can be found in Table 4-4. A summary of the TAP emission estimation process is presented in Section 4.

*210.03. Quantification of Ambient Concentrations*

Affected Units:
EU1 – Cat 3520
EU2 – Cat 3520
EU3 – Boiler
EU4 – Flare

Modeling of emissions was performed as described in Section 7.

*210.04. Preconstruction Compliance Demonstration*

Affected Units:
EU1 – Cat 3520
EU2 – Cat 3520
EU3 – Boiler
EU4 – Flare

Preconstruction compliance for each identified TAP is demonstrated by the modeling described in Section 7.

*213. PRE-PERMIT CONSTRUCTION*

*213.01. Pre-Permit Construction Eligibility*

Affected Units:
EU1 – Cat 3520
EU2 – Cat 3520
EU3 – Boiler
EU4 – Flare

*213.01(a): The owner or operator shall apply for a permit to construct.*

This application is submitted to satisfy this requirement.

*213.01(b): The owner or operator shall consult with Department representatives prior to submitting a pre-permit construction approval application.*

This requirement was satisfied by meeting with IDEQ representatives on May 4, 2011.

213.01(c): *The owner or operator shall submit a pre-permit construction approval application which must contain, but not be limited to: a letter requesting the ability to construct before obtaining the required permit to construct, a copy of the notice referenced in Subsection 213.02; proof of eligibility; process description(s); equipment list(s); proposed emission limits and modeled ambient concentrations for all regulated air pollutants, such that they demonstrate compliance with all applicable air quality rules and regulations. The models shall be conducted in accordance with Subsection 202.02 and with written Department approved protocol and submitted with sufficient detail so that modeling can be duplicated by the Department.*

These required elements are included in this application package.

213.01(d): *Owners or operators seeking limitations on a source's potential to emit such that permitted emissions will be either below major source levels or below a significant increase must describe in detail in the pre-permit construction application the proposed restrictions and certify in accordance with Section 123 that they will comply with the restrictions, including any applicable monitoring and reporting requirements. The required description of PTE limitations is included in Section 4.*

The required certification is included in the cover letter accompanying this application.

*213.02. Permit To Construct Procedures For Pre-Permit Construction*
*Within ten (10) days after the submittal of the pre-permit construction approval application, the owner or operator shall hold an informational meeting in at least one (1) location in the region in which the stationary source or facility is to be located. The informational meeting shall be made known by notice published at least ten (10) days before the meeting in a newspaper of general circulation in the county(ies) in which the stationary source or facility is to be located. A copy of such notice shall be included in the application.*

The required public meeting will be held on November 1, 2011. A copy of the required notice is included in Appendix 2.

*214. DEMONSTATION OF PRECONSTRUCTION COMPLIANCE FOR NEW AND RECONSTRUCTED MAJOR SOURCES OF HAZARDOUS AIR POLLUTANTS*

The proposed sources are not considered Major Facilities so this section does not apply.

*220. GENERAL EXEMPTION CRITERIA FOR PERMIT TO CONSTRUCT EXEMPTIONS*
*222. CATEGORY II EXEMPTION*

Affected emission units:
EU3 – Boiler

The 125 horse power Columbia boiler (EU3) has a heat input capacity of 5.3 MMBtu/hr. This device combusts biogas, meets the indirect heating classification, and is below the heat input capacity exemption threshold of 50 MMBtu/hr, and therefore qualifies for Category II Exemption (IDAPA 58.01.01.222.02.c).

*223. EXEMPTION CRITERIA AND REPORTING REQUIREMENTS FOR TOXIC AIR POLLUTANT EMISSIONS.*

Not applicable as no exemptions are being claimed.

*224. PERMIT TO CONSTRUCT APPLICATION FEE*

The facility has included a check for $1,000 for the Permit to Construct Application.

*225. PERMIT TO CONSTRUCT PROCESSING FEE*

A processing fee of $1,000 is anticipated for a modification of an existing source with an increase in total emissions of 1 ton or less.

*226. PAYMENT OF FEES FOR PERMITS TO CONSTRUCT*

The facility understands that the permit will not be issued by the Department until it has received payment for the processing fee.

*300. Procedures and Requirements of Tier I operating Permits*

The facility is not considered a major source and not subject to these requirements.

*577. AMBIENT AIR QUALITY STANDARDS FOR SPECIFIC AIR POLLUTANTS.*

Compliance with all applicable ambient air quality standards is discussed in Section 7.

*578. DESIGNATION OF ATTAINMENT, UNCLASSIFIABLE, AND* NONATTAINMENT AREAS.

The proposed project is located in Twin Falls County which is currently classified as unclassifiable or attainment for criteria pollutants. The applicant acknowledges that DEQ annually reviews areas for classification.

*585. TOXIC AIR POLLUTANTS NON-CARCINOGENIC INCREMENTS.*

Compliance with AACs is addressed in Sections 4 and 7.

*586. TOXIC AIR POLLUTANTS CARCINOGENIC INCREMENTS.*

Compliance with AACCs is addressed in Sections 4 and 7.

*590. NEW SOURCE PERFORMANCE STANDARDS.*

Affected Units:
EU1 – Cat 3520
EU2 – Cat 3520
EU3 – Boiler
EU4 – Flare

Compliance with NSPS is discussed in Section 3.1.

*591. NATIONAL EMISSION STANDARDS FOR HAZARDOUS AIR POLLUTANTS.*

Compliance with NESHAPs is discussed in Section 3.1.

*625. VISIBLE EMISSIONS.*

Affected Units:
EU1 – Cat 3520
EU2 – Cat 3520
EU3 – Boiler
EU4 – Flare

*A person shall not discharge any air pollutant into the atmosphere from any point of emission for a period or periods aggregating more than three (3) minutes in any sixty (60) minute period which is greater than twenty percent (20%) opacity as determined by this section.*

This requirement is applicable to all emission units listed above.

*650. RULES FOR CONTROL OF FUGITIVE DUST.*
*All reasonable precautions shall be taken to prevent particulate matter from becoming airborne. In determining what is reasonable, consideration will be given to factors such as the proximity of dust emitting operations to human habitations and/or activities and atmospheric conditions which might affect the movement of particulate matter. Some of the reasonable precautions may include, but are not limited to, the following:*
*01. Use Of Water Or Chemicals. Use, where practical, of water or chemicals for control of dust in the demolition of existing buildings or structures, construction operations, the grading of roads, or the clearing of land.*
*02. Application Of Dust Suppressants. Application, where practical, of asphalt, oil, water or suitable chemicals to, or covering of dirt roads, material stockpiles, and other surfaces which can create dust.*
*03. Use Of Control Equipment. Installation and use, where practical, of hoods, fans and fabric filters or equivalent systems to enclose and vent the handling of dusty materials.*
*04. Covering Of Trucks. Covering, when practical, open bodied trucks transporting materials likely to give rise to airborne dusts.*
*05. Paving. Paving of roadways and their maintenance in a clean condition, where practical. Note: all truck traffic areas will be paved.*

*675. FUEL BURNING EQUIPMENT -- PARTICULATE MATTER.*
And
*676. STANDARDS FOR NEW SOURCES.*
And
*677. STANDARDS FOR MINOR AND EXISTING SOURCES.*

Affected units:
EU1 – Cat 3520
EU2 – Cat 3520

EU3 – Boiler
EU4 – Flare

All sources meet the grain loading standard for combustion of gas of 0.015 grain per dry standard cubic feet (dscf).

*700. PARTICULATE MATTER -- PROCESS WEIGHT LIMITATIONS.*
*And*
*710. PARTICULATE MATTER -- PROCESS EQUIPMENT EMISSION LIMITATIONS ON OR AFTER JULY 1, 2000.*

Not applicable, no process or process equipment is proposed for this project.

*775. RULES FOR CONTROL OF ODORS.*
*And*
*776. GENERAL RULES.*

No emission of odorous gases, liquids or solids into the atmosphere in such quantities as to cause air pollution will be allowed.

# Section 4 – Emission Estimates

## 4.0 Potential to Emit/Emission Estimates/Limitation on Potential to Emit

This section provides a detailed analysis of how the emissions from the facility were estimated and the assumptions related to the capacity of the proposed equipment.

### 4.1 Equipment and Source Description

New Energy One is proposing to install two gensets, a boiler, and flare at the facility. The general specifications for the air emitting equipment are described in Table 4-1.

**Table 4-1. Equipment Description**

| | Emission Units (EU) | | | |
|---|---|---|---|---|
| | 1 | 2 | 3 | 4 |
| Source type | Genset | Genset | Boiler | Flare |
| Model number | CAT 3520 | CAT 3520 | Columbia | Shand&Jurs 97300 (or equivalent) |
| Break Horsepower | 2,233 | 2,233 | 125 | NA |
| Hourly Equipment Peak Input Biogas capacity (cf/hr) | 25,000 | 25,000 | 9,292 | 59,292 |
| Peak Biogas Heat Input capacity (Btu/hr) | 14.1 | 14.1 | 5.2 | 33.5 |
| Daily peak biogas capacity (cf/day) | 600,000 | 600,000 | 223,008 | 1,423,008 |
| Annual Equipment biogas capacity (Mcf/year) | 219 | 219 | 81 | 519 |
| Annual Estimated peak biogas capacity (Mcf/year) | 163 | 163 | 75 | 402 |

### 4.2 Facility Operations and Source Parameters

The operation of the facility is limited by the volume of biogas generated by the anaerobic digestion process. The biogas generation may fluctuate based on biological conditions within the digesters, ambient temperature and other factors for which the operator has limited control. The size of the generators was selected to match the expected biogas generation and provide operational flexibility to accommodate maintenance and natural fluctuation in the biogas generation from the digester system. The maximum capacity of the biogas consuming equipment at the facility (1,423,008 cf/day) exceeds the expected output of the digestion process (1,100,000 cf/day).

The facility will not be capable of operating all of the emission units at their peak capacity at the same time based on the expected generation rate of biogas from the digester. However, any combination of the emission units may operate simultaneously at reduced capacity.

#### Gensets

After the anaerobic digestion process reaches a steady state, the gensets are expected to operate at, or near, capacity. The hourly peak biogas capacity of the gensets was estimated in consultation with the engine manufacturer. The 24-hour peak biogas capacity assumes that the gensets will operate at its peak hourly rate for a consecutive 24 hour period. The estimated annual peak operating capacity recognizes that the units

will not operate at a peak hourly rate for the entire year and the overall operation will be limited due to the maximum expected biogas generated from the digesters. The annual anticipated operation will be impacted by maintenance downtime and fluctuations in biogas generation. We have estimated the genset's annual average consumption of biogas will be approximately 77% of their peak hourly consumption.

Each genset will have an individual stack extending 30 feet above the ground surface. The source parameters for the gensets vary based on their individual capacity. The exhaust from the gensets will pass through a heat exchanger prior to discharging to the atmosphere. The heat exchange process will reduce stack discharge temperatures and exhaust flow rates for the gensets. There are no emissions associated with the heat exchanger. Table 4-2 summarizes the source parameter for each of the emission units.

**Table 4-2. Emission Unit Source Parameters**

| | Emission Units (EU) | | | |
|---|---|---|---|---|
| | 1 | 2 | 3 | 4 |
| Source type | Genset | Genset | Boiler | Flare |
| Model number | CAT 3520 | CAT 3520 | Columbia | Shand&Jurs 97300 (or equivalent) |
| End of Stack exhaust temperature (°F) | 350 | 350 | NA | NA |
| Stack Height (ft) | 30 | 30.05 | 30 | 30 |
| Stack Diameter (in) | 14 | 14 | 14 | 24 |
| Exhaust flow rate at capacity (cfm) w/o heat exchange | 12,476 | 12,476 | 1,677 | 10,790 |
| Exhaust flow rate at capacity (cfm) w/ heat exchange | 7,440 | 7,440 | NA | NA |

### Boiler

The boiler will also operate from biogas generated from the digesters. The purpose of the boiler is to provide heat energy to the digesters to optimize the digester operating conditions. The boiler is not anticipated to be used continuously, but on an as needed basis. During startup and emergency operation, it may be necessary to use No. 2 Diesel to power the boiler. This permit application requests the boiler be permitted as a permanent emission source at the facility.

### Flare

The intent and objective of the facility is to minimize the volume of gas diverted to the flare. However, it will be necessary to use the flare to accommodate swings in biogas flow or to divert biogas if its deemed necessary to bring a generator offline. The flare is a candlestick type flare.

## 4.3 Emission Factors

The emission factors used to estimate emissions from the combustion equipment came from multiple sources including research conducted by The Gas Technology Institute on

the quality of biomethane from dairy waste derived projects, AP-42, EPA's WebFire database, and vendor information. The vendor information for the gensets was based on EPA required testing for NOx, CO and VOCs to comply with manufacturer requirements under Subpart JJJJ.

### Toxic Air Pollutants (TAPs)

The Gas Technology Institute (GTI) conducted a study entitled *The North American Guidance Document for Introduction of Dairy Waste Derived Biomethane into Existing Natural Gas Networks*.[1] The study evaluated the quality of biogas generated from dairy waste. Biogas samples from projects similar to the project proposed in this application were analyzed for volatile and semi-volatile organic compounds, metals, sulfur compounds, PCBs and pharmaceuticals.

The data presented in the GTI report was used to estimate potential TAP emissions from the emission units that are anticipated as a result of incomplete combustion of biogas. It is anticipated that the compounds will be not be entirely destroyed during the combustion process. A control efficiency for each type of combustion device was applied to the biogas TAP concentrations to determine the un-combusted TAP concentration that would be emitted. Control efficiencies for combustion equipment were obtained from the draft EPA AP-42 Section 2.4 for Landfill Gas, Table 2.4-3. These control efficiencies were: 97.2% for the gensets, 98.6% for the boiler, and 97.7% for the flare. The emission calculations assume the average concentration of the detected compounds will be present in the raw digester biogas for annual average calculations and maximum concentrations of the detected compounds will be present in the raw digester biogas for the short-term averaging periods.

AP-42 emission factors for boilers (AP-42 Section 1.4) and internal combustion engines (AP-42 Section 3-2) were used to estimate potential TAP emission rates associated with the combustion of biogas.

To calculate the total emissions for each TAP, the emissions from non-combustion (calculated using GTI biogas data) and combustion (AP-42) were added together.

### Sulfur Dioxide ($SO_2$)

The anaerobic biological process generates $H_2S$, which is present in the raw biogas. The $H_2S$ is corrosive to the gensets and process equipment and it is in the facility's best interest to monitor and, where possible, minimize $H_2S$ concentrations. The GTI report indicates minimum $H_2S$ Concentration of 1,480 ppm and maximum $H_2S$ concentration of 6,570 ppm from 12 biogas samples collected from similar projects. The manufacturer of proposed digester system has indicated that the maximum $H_2S$ concentration will not exceed 1,000 $ppm_v$ after the initial startup period. To provide additional protection, an iron sponge filter will be used, this will reduce $H_2S$ in biogas to 700 $ppm_v$ or less.

[1] *GTI Project Number 20614, Available at www.gastechnology.org.*

### Nitrogen Dioxide (NOx), Carbon Monoxide (CO) and Volatile Organic Compounds (VOCs)

Caterpillar provides an estimate of the emissions of NOx, CO and VOCs for each of its gensets. The data provided by Caterpillar is in terms of grams per hour of pollutant per break horsepower. The manufacturer technical data sheets are included in Appendix 1. The vendor indicates that the gensets will out-perform the federal NSPS standards (40 CFR Part 60 Subpart JJJJ). AP-42 emission factors for natural gas combustion were used to estimate emissions from the proposed boiler and flare. $NO_2$ emission rates were estimated assuming 75% of NOx emissions were $NO_2$.

## Particulate Emissions

The $PM_{10}$ and $PM_{2.5}$ emission factors for the gensets were selected from AP-42 Section 3.2, Table 3.2 – Uncontrolled Emission Factors for 4-stroke Lean–Burn Engines. The table presents D-Rated PM-10 (filterable) and PM condensable emission factors for natural gas lean burn reciprocating engines. The PM-10 emissions represent the sum of the PM-10 (filterable) and the PM condensable fractions, since the condensable fraction is likely less than 10 microns. The AP-42 emission factors were converted to lb/cf basis for purposes of maintaining consistency with other emission factors.

AP-42 emission factors (AP-42 Section 1.4) for natural gas combustion were used to estimate PM emissions from the boiler.

### 4.4 Emission Estimate

The hourly emission rates were calculated by multiplying the expected hourly peak biogas consumption rate for each emission unit by the pollutant emission factor. The peak hourly consumption rates were estimated based on the maximum anticipated hourly capacity for each unit.

The annual emissions from each emission unit were calculated by multiplying the expected annual peak biogas consumption for each unit by the pollutant emission factor. The expected peak annual biogas consumption is limited by the amount of biogas the digester system is capable of producing. Although hourly swings in each unit's gas consumption may reach its maximum hourly capacity. The units will not be capable of operating at its peak hourly capacity for the entire year.

The total potential facility emission calculations assumed two operating scenarios. The first scenario assumes that all biogas is combusted in the gensets and boiler and that no biogas is diverted to the flare. This provides a worst-case estimate of the emissions both for short-term hourly emission calculations and for the annual emission estimate. It is not likely the boiler will operate at capacity, or continuously, when the gensets are operating at capacity.

The second operating scenario considers all biogas is diverted to the flare. This mode of operation was included to demonstrate that modeled impacts to NAAQS and TAPs are within allowable limits when the flare is operating at capacity Long term operation of

only the flare is not likely due to the intent and purpose of the facility for generating electricity.

Table 4-3 summarizes the potential emission rates for the primary pollutants for both scenarios.

**Table 4-3. Summary of Primary Pollutant Potential Emission Rates**

| | Pollutant | **Genset and Boiler** Emissions | | **Flare** Emissions | |
|---|---|---|---|---|---|
| | | (lb/hr) | (ton/yr) | (lb/hr) | (ton/yr) |
| Primary Pollutants | PM10 | 0.35 | 1.21 | 0.45 | 1.53 |
| | PM2.5 | 0.35 | 1.21 | 0.45 | 1.53 |
| | $SO_2$ | 6.90 | 23.36 | 6.90 | 23.36 |
| | NOx | 10.78 | 35.90 | 2.28 | 7.71 |
| | $NO_2$ | 8.08 | 26.93 | 1.71 | 5.78 |
| | CO | 25.40 | 83.54 | 12.39 | 41.97 |
| | VOC | 8.32 | 27.22 | 4.70 | 15.91 |
| | Lead | | | | |

The hourly emission rates for the Toxic Air Pollutants regulated under IDAPA 58.01.01 Section 585 were estimated using the peak hourly biogas consumption rate. Whereas, the TAPs regulated under IDAPA 58.01.01 Section 586 were estimated using the annual average hourly biogas consumption rate. Table 4-4 summarizes the potential emission rates for the TAPs for both scenarios. It is possible for the facility to operate with some combination of the flare and other emission units simultaneously to balance the gensets with the biogas generation. However, the emission estimates presented in Table 4-3 and Table 4-4 should represent a worst case of any combined operation of the units.

## Table 4-4. Summary of TAPs Potential Emission Rates

| | Pollutant | Genset and Boiler Emissions | | Flare Emissions | | TAP EL (lb/hr) | Exceed EL? |
|---|---|---|---|---|---|---|---|
| | | (lb/hr) | (ton/yr) | (lb/hr) | (ton/yr) | | |
| Section 585 TAP | Acrolein | 1.45E-01 | 4.74E-01 | | | 1.70E-02 | Yes |
| | Barium, soluble compounds, as Ba | 4.09E-05 | 1.65E-04 | 2.61E-04 | 8.83E-04 | 3.30E-02 | No |
| | Biphenyl | 5.99E-03 | 1.96E-02 | | | 1.00E-01 | No |
| | 2-Chlorophenol (and all isomers) (ID) | 6.07E-07 | 2.02E-06 | 5.41E-07 | 1.83E-06 | 3.30E-02 | No |
| | Chromium metal - Including: | 1.30E-05 | 5.24E-05 | 8.30E-05 | 2.81E-04 | 3.30E-02 | No |
| | Cobalt metal, dust, and fume | 7.81E-07 | 3.15E-06 | 4.98E-06 | 1.69E-05 | 3.30E-03 | No |
| | Copper - Dusts & mists, as Cu | 7.90E-06 | 3.18E-05 | 5.04E-05 | 1.71E-04 | 6.70E-02 | No |
| | Cresols/Cresylic Acid (isomers and mixtures) | 3.58E-05 | 1.19E-04 | 3.19E-05 | 1.08E-04 | 1.47E+00 | No |
| | Cyclopentane | 6.41E-03 | 2.09E-02 | | | 1.15E+02 | No |
| | Dibutyl phthalate | 1.19E-06 | 3.97E-06 | 1.06E-06 | 3.59E-06 | 3.33E-01 | No |
| | Ethyl benzene | 1.14E-03 | 3.71E-03 | 1.29E-05 | 4.37E-05 | 2.90E+01 | No |
| | Manganese as Mn Dust & compounds | 3.53E-06 | 1.42E-05 | 2.25E-05 | 7.63E-05 | 3.33E-01 | No |
| | Mercury (vapors except Alkyl as Hg) | 2.42E-06 | 9.74E-06 | 1.54E-05 | 5.22E-05 | 3.00E-03 | No |
| | Molybdenum as Mo -Soluble compounds | 1.02E-05 | 4.12E-05 | 6.52E-05 | 2.21E-04 | 3.33E-01 | No |
| | Methanol | 7.06E-02 | 2.31E-01 | | | 1.73E+01 | No |
| | Hexane (n-Hexane) | 3.14E-02 | 1.02E-01 | | | 1.20E+01 | No |
| | Hydrogen sulfide | 9.46E-02 | 3.15E-01 | 8.43E-02 | 2.85E-01 | 9.33E-01 | No |
| | o-Methylcyclohexanone | 3.47E-02 | 1.13E-01 | | | 1.53E+01 | No |
| | Naphthalene | 2.11E-03 | 6.89E-03 | 3.69E-05 | 1.25E-04 | 3.33E+00 | No |
| | Nitrobenzene | 2.83E-07 | 9.43E-07 | 2.52E-07 | 8.55E-07 | 3.33E-01 | No |
| | Nonane | 3.11E-03 | 1.01E-02 | | | 7.00E+01 | No |
| | Octane | 9.92E-03 | 3.24E-02 | | | 9.33E+01 | No |
| | Pentane | 9.76E-02 | 3.37E-01 | 1.54E-01 | 5.22E-01 | 1.18E+02 | No |
| | Phenol | 6.89E-04 | 2.25E-03 | 9.53E-06 | 3.23E-05 | 1.27E+00 | No |
| | Pyridine | 4.76E-07 | 1.58E-06 | 4.24E-07 | 1.44E-06 | 1.00E+00 | No |
| | Selenium | 2.23E-07 | 8.99E-07 | 1.42E-06 | 4.82E-06 | 1.30E-02 | No |
| | Styrene monomer (ID) | 5.38E-07 | 1.79E-06 | 4.80E-07 | 1.62E-06 | 6.67E+00 | No |
| | Toluene (toluol) | 1.16E-02 | 3.80E-02 | 2.50E-04 | 8.48E-04 | 2.50E+01 | No |
| | Trimethyl benzene (mixed and individual | 2.01E-03 | 6.56E-03 | | | 8.20E+00 | No |
| | 2,2,4-Trimethyl-pentane | 7.06E-03 | 2.31E-02 | | | 2.33E+01 | No |
| | Xylene (o-, m-, p-isomers) | 5.23E-03 | 1.71E-02 | 1.72E-03 | 5.82E-03 | 2.90E+01 | No |
| Section 586 TAP | Aniline | 7.32E-06 | 3.21E-05 | 6.63E-06 | 2.90E-05 | 9.0E-04 | No |
| | Arsenic compounds | 1.71E-06 | 7.49E-06 | 9.17E-06 | 4.02E-05 | 1.5E-06 | Yes |
| | Benzene | 9.29E-03 | 4.07E-02 | 9.90E-05 | 4.34E-04 | 8.0E-04 | Yes |
| | Bis (2-chloro-1-methyl- ethyl) ether | 1.76E-06 | 7.71E-06 | 1.59E-06 | 6.98E-06 | 3.3E-04 | No |
| | Bis (2-ethylhexyl) phthalate | 4.56E-06 | 2.00E-05 | 4.13E-06 | 1.81E-05 | 2.8E-02 | No |
| | Cadmium and compounds | 9.40E-06 | 4.12E-05 | 5.04E-05 | 2.21E-04 | 3.7E-06 | Yes |
| | Carbon tetrachloride | 1.00E-06 | 4.39E-06 | 9.07E-07 | 3.97E-06 | 4.4E-04 | No |
| | Formaldehyde | 6.41E-04 | 2.81E-03 | 3.44E-03 | 1.51E-02 | 5.1E-04 | Yes |
| | Nickel | 1.80E-05 | 7.86E-05 | 9.63E-05 | 4.22E-04 | 2.7E-05 | Yes |
| | Dichloromethane (Methylenechloride) | 4.21E-04 | 1.85E-03 | | | 1.6E-03 | No |
| | 1,1,2,2,Tetrachloro-ethane | 5.22E-05 | 2.29E-04 | | | 1.1E-05 | Yes |
| | Tetrachloroethylene | 8.30E-07 | 3.63E-06 | 7.52E-07 | 3.29E-06 | 1.3E-02 | No |
| | 1,1,2 - trichloroethane | 2.03E-05 | 8.90E-05 | 1.84E-05 | 8.06E-05 | 4.2E-04 | No |
| | Vinyl Chloride | 3.14E-04 | 1.37E-03 | | | 1.2E-03 | No |

## 4.5 Changes to Potential to Emit

The proposed modification will result in a change in the potential to emit for some criteria pollutants (see Table 4-5 for a summary of these changes). PM10 and PM2.5 hourly (lb/hr) potential to emit increased for the gensets because of the increased combustion capacity associated with the proposed large genset. The annual (T/yr) emission rate for PM10 and PM2.5 did not change since the total biogas generated will not change. $SO_2$ emission rates decreased for all sources because the proposed iron sponge will reduce $H_2S$ in biogas, directly reducing the $SO_2$ generated in the combustion process. NOx and $NO_2$ hourly potential emissions decreased for the gensets due to the lower emission factor specified by the manufacturer of the larger genset. CO potential to emit for the gensets increased due to the higher fuel input capacity of the larger genset and higher emissions factor. VOC hourly potential emissions increased while the annual potential emissions decreased due to the higher fuel input capacity of the larger genset and revised emission factor. The hourly potential to emit for PM2.5, PM10, NOx, $NO_2$, CO and VOC for the flare increased because the flare biogas throughput was increased to match the increased input capacity of the larger genset.

**Table 4-5. Summary of Changes to Criteria Pollutant Potential Emit**

| | | **Genset and Boiler** Emissions | | | | **Flare** Emissions | | | |
|---|---|---|---|---|---|---|---|---|---|
| | Pollutant | Change (lb/hr) | % Change | Change (T/yr) | % Change | Change (lb/hr) | % Change | Change (T/yr) | % Change |
| Primary Pollutants | PM10 | 0.1 | 18% | 0.0 | 0% | 0.1 | 19% | 0 | 0% |
| | PM2.5 | 0.1 | 18% | 0.0 | 0% | 0.1 | 19% | 0 | 0% |
| | $SO_2$ | -1.4 | -17% | -10.0 | -30% | -1.4 | -17% | -10 | -30% |
| | NOx | -1.7 | -14% | -14.6 | -29% | 0.4 | 19% | 0 | 0% |
| | $NO_2$ | -1.3 | -14% | -10.9 | -29% | 0.3 | 19% | 0 | 0% |
| | CO | 6.0 | 31% | 5.2 | 7% | 2.0 | 19% | 0 | 0% |
| | VOC | 1.4 | 21% | -0.6 | -2% | 0.8 | 19% | 0 | 0% |
| | Lead | | | | | | | | |

The hourly potential to emit for 585 TAPs increased for pollutants associated with the gensets because of the increased fuel input capacity of the proposed larger genset. Only acrolein exceeded the emissions screening level (EL) and required modeling. The hourly potential to emit for 586 TAPs did not change because these emission rates are calculated using average hourly values based on annual biogas usage.

## 4.6 Fuel Burning Equipment - Particulate Matter

Particulate matter emission limits are established in IDAPA 58.01.01.675. The limit for new sources combusting gas is 0.015 grains per dry standard cubic foot (dscf) corrected for 3% oxygen. The calculated particulate matter loading from proposed fuel burning equipment at the site varies from 0.008 to 0.01 grains/dscf (see Appendix 1) and meets the stated requirement.

## 4.7 Limitations on Potential to Emit

In order to remain below the National Ambient Air Quality Standard (NAAQS) for $SO_2$, the facility agrees to a limit to maintain the $SO_2$ discharge rate below 6.9 lb/hr. Monitoring and recordkeeping of sulfur dioxide emissions will occur once every 3 hours for the first 12 weeks of operations. Daily monitoring will be used if the 12 week sulfur dioxide emission rate (measured every 3 hours) does not meet or exceed 90 percent of the pound per hour limit. If any measured sulfur dioxide emission rate during daily monitoring meets or exceeds 90 percent of the $SO_2$ pound per hour limit the monitoring frequency will revert to 3 hour intervals.

At full capacity, the digester is expected to produce 1.1 million cubic feet (cf)/day of biogas with maximum $H_2S$ concentration of 700 $ppm_v$. At startup, biogas production will increase as each digester tank is brought on line until maximum production is reached. During startup the average $H_2S$ concentration may exceed 700 $ppm_v$ but the biogas flow rate will be below maximum capacity which will result in a mass discharge rate less than the requested lb/hr limit.

Combustion emission rates were determined based on equipment maximum rated firing rates for short-term averaging periods and the maximum potential biogas generation rate for annual averages. A permit limit of 402 million cf/year biogas is appropriate for demonstrating regulatory compliance.

# Section 5 – Facility Classification

## 5.0 Facility Classification

The Rock Creek facility is located in Twin Falls County, Idaho. This area is considered attainment or unclassified for all criteria pollutants.

The facility is not a designated facility as defined in IDAPA 58.01.01.006.26. The facility is not a major facility as defined IDAPA 58.01.01.008.10. The proposed modification is not a major modification defined in IDAPA 58.01.01.006.55. The primary SIC Code for the facility is 4911 and the NAICS code is 22111.

There are no Class I areas within 10 km of the facility. PSD is not applicable as discussed in Section 3. Emission inventories are presented in Section 4.

# Section 6 - Plot Plan

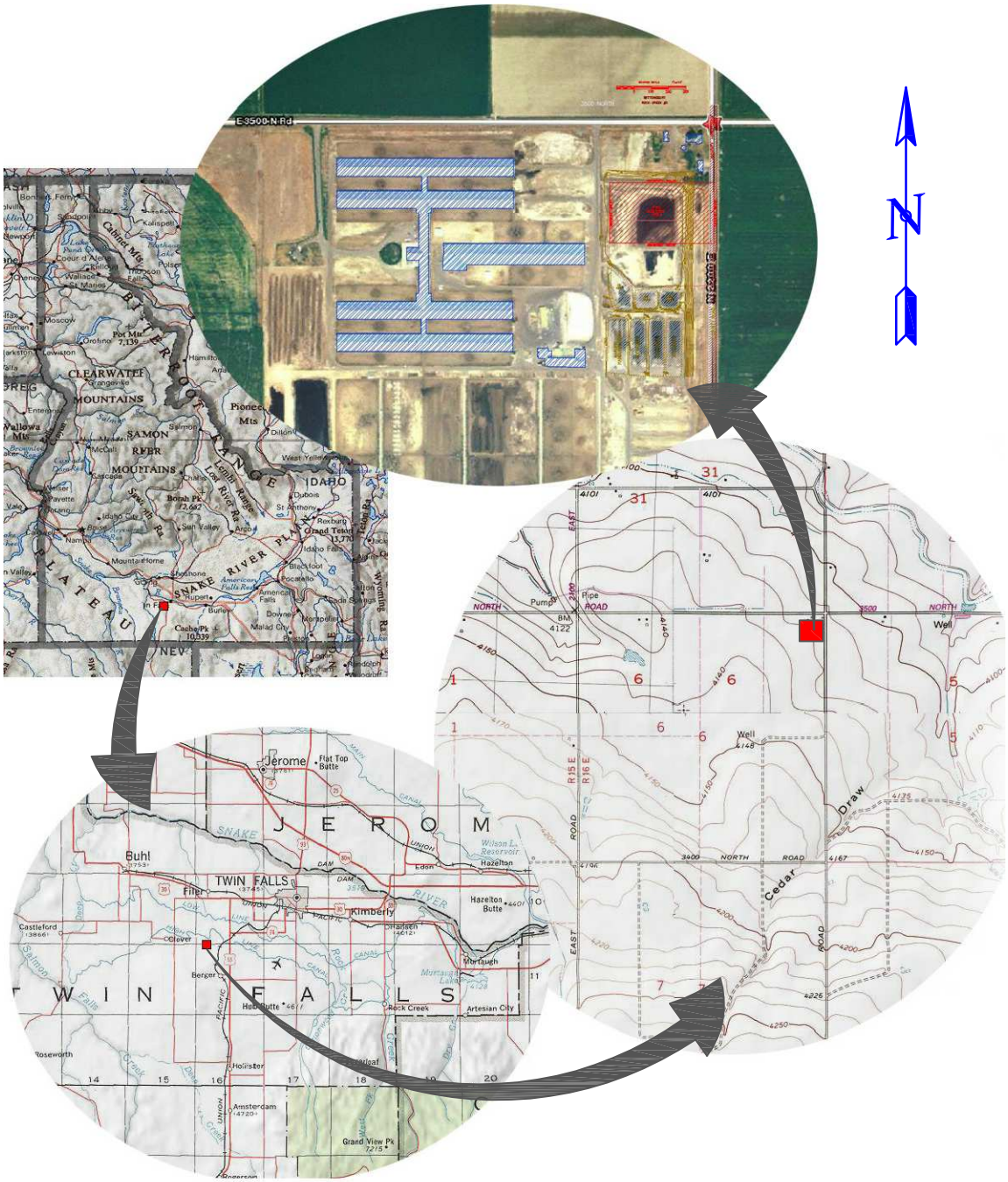


THE INFORMATION INCLUDED ON THIS GRAPHIC REPRESENTATION HAS BEEN COMPILED FROM A VARIETY OF SOURCES AND IS SUBJECT TO TO CHANGE WITHOUT NOTICE. APMARSHALL AND ASSOCIATES MAKES NO REPRESENTATIONS OR WARRANTIES, EXPRESS OR IMPLIED, AS TO THE ACCURACY, COMPLETENESS, TIMELINESS, OR RIGHTS TO THE USE OF SUCH INFORMATION. THIS DOCUMENT IS NOT INTENDED FOR USE AS A LAND SURVEY PRODUCT NOR IS IT DESIGNED OR INTENDED AS A CONSTRUCTION DESIGN DOCUMENT. THE USE OR MISUSE OF THE INFORMATION CONTAINED ON THIS PAGE IS AT THE SOLE RISK OF THE PARTY USING OR MISUSING THE INFORMATION.

Drawing revised by MSE. Source is AP Marshall & Associates dated 4/3/10.

MSE
Millennium Science & Engineering, Inc.

| | | | |
|---|---|---|---|
| PROJECT NO. | | VICINITY MAP | SHEET: 1 |
| DRAWN BY: | CHECKED BY: | | |
| DATE: 8/20/2010 | | NEW ENERGY ONE<br>2175 E 3500 N.<br>FILER, ID 83328 | SCALE: NTS |
| FILE NAME: SHEET 1 – VICINITY.DWG | | | |

FILE LOCATION: \\MSESBS\USERS\TRIECKE\MY DOCUMENTS\NEW ENERGY ONE\BACKGROUND INFO\DRAWING\SHEET 1 – VICINITY.DWG

2200 EAST ROAD

GENSET (EU1)

GENSET (EU2)

FLARE (EU4)

BOILER (EU3)

BUILDING PEAK

LAGOON

LAGOON

LAGOON

LAGOON

LAGOON

LAGOON

CONCRETE

120.00'

60.00'

BUILDING PEAK 4164.5

RADIATORS

FUTURE 85' DIA.
DIGESTERS
PEAK HEIGHT 4173.0
TYPICAL OF 3 EA.

EXISTING 85' DIA.
DIGESTERS
PEAK HEIGHT 4173.0
TYPICAL OF 6 EA.

30.00'

60.00'

79.00'

140.00'

EDGE GRAVEL TYP

BUILDING

BUILDING

CONCRETE

CONC WALL

CONCRETE

ELEVATED CONCRETE PAD

CONC WALL

CONC WALL

CONCRETE

CONC PIT

CONC PIT

Leased Property
Boundary

CONCRETE

SCALE

SCALE HOUSE

EDGE ASPHALT TYP

CONCRETE

CATCH BASIN

CORRAL

ASPHALT

BUILDING

CORRAL

N

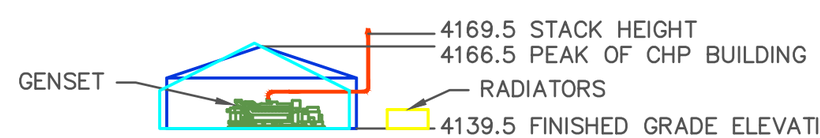


Drawing revised by MSE. Source is AP Marshall & Associates 6/26/10.

| | | | |
|---|---|---|---|
| PROJECT NO. | DRAWN BY: | MSE Millennium Science & Engineering, Inc. | EMISSION UNIT SITE PLAN |
| | DESIGNED BY: | | |
| DATE: 9/6/2011 | CHECKED BY: | | NEW ENERGY ONE 2175 E 3500 N Filer, ID 83328 |
| FILE NAME. SHEET 2 – SITE PLAN.DWG | | | |

SHEET: 2

SCALE: 1 inch=120 feet

FILE LOCATION: O:\BOISE\PROJECT FILES\NEW ENERGY ONE – B3085\REPORTS\FINAL DOCUMENTS\PTC MODIFICATION\SHEET 2 – SITE PLAN.DWG

# Section 7 – Ambient Impact Assessment

## 7.0 Ambient Impact Assessment

Air dispersion modeling was performed to demonstrate compliance with NAAQS for criteria pollutants and IDEQ screening levels for TAPs in support of this Pre-Permit Construction and PTC Modification Application for the Rock Creek facility. Modeling was performed according to the Modeling Protocol submitted to the IDEQ on May 20, 2011 (see Appendix 3 for a copy of the modeling protocol and the IDEQ approval letters). A Preliminary Analysis (PA) was completed to evaluate the net increase associated with the proposed project modification.

### 7.1 Model Description / Justification

Air dispersion modeling was performed using the Environmental Protection Agency (EPA) AERMOD model (version 11103). Building downwash was accounted for in the model. Building dimensions were entered into the Building Parameter Input Program to calculate appropriate building profiles to import into AERMOD. Model input and output files are included on the compact disk (CD) included in Appendix 4.

### 7.2 Emission and Source Data

Net emission increases associated with the proposed modification were determined for each of the criteria pollutants and compared to modeling thresholds presented in Table 1 of the State of Idaho Air Quality Modeling Guideline. None of the emission increases associated with the proposed modification exceeded Idaho modeling thresholds. Acrolein was the only TAP that exceeded an EL for toxic air pollutants.

Since the original permit application did not consider short-term 1 hour average ambient impacts for $SO_2$ or $NO_2$, short-term 1 hour average modeling was performed for both the original equipment configuration and the modified configuration. The net ambient incremental increase was determined by subtracting the model results for the permitted equipment configuration from the model results for the proposed modified equipment configuration. The maximum 1 hour incremental increase at each receptor for each day was determined for each of the 5 meteorological dataset years. These values for each year were averaged to determine the 5 year average of maximum daily 1 hour values at each receptor. The maximum 5 year average of the maximum daily 1 hour values was determined for both $SO_2$ and $NO_2$ and compared to interim EPA Significant Impact Levels (SILs).

Acrolein emissions from the proposed equipment modification were modeled for comparison to the applicable Acceptable Ambient Concentration (AAC).

Discharge elevation and stack orientation for the gensets and boiler were obtained from contractor provided drawings. Stack diameter, discharge temperature, and flow rate for the gensets were provided on vendor supplied cut-sheets. Discharge temperatures for the exhaust from the gensets was reduced to account for the exhaust passing through a heat exchanger. Discharge flow rates for the gensets were corrected to account for the reduced temperatures. The flare was not modeled for this project since no emission increase in excess of Idaho modeling thresholds

was predicted for the proposed modification. Table 7-1 was summarizes emission source characteristics included in the modeling analysis.

**Table 7-1**
**Emission Source Characteristics**

| | Emission Units (EU) | | | |
|---|---|---|---|---|
| | 1 | 2 | 3 | 4 |
| Source type | Genset | Genset | Boiler | Flare |
| Stack height (m) | 9.15 | 9.16 | 9.15 | 13.79[a] |
| Stack inside Diameter (m) | 0.36 | 0.36 | 0.36 | 0.61 |
| Stack exit velocity (m/s) | 35.37 | 35.37 | 7.97 | 14.63 |
| Stack gas temperature (°K) | 450 | 450 | 450 | 1273.15[a] |

[a] Stack height for flare is effective release height calculated by SCREEN3. The stack gas temperature is the default value listed in the SCREEN3 Model User's Guide.

## 7.3 Receptor Network

A receptor network was established so that ambient concentrations could be evaluated. The first step in this process was to determine the location of the ambient air boundary and the second step was to assign receptor locations within the ambient air zone.

### 7.3.1 Ambient Air Boundary

The facility is located within a 5-acre leased parcel located on an active dairy farm. The facility is staffed daily to monitor and maintain equipment. The perimeter of the project boundary will be denoted with signs indicating the area is private and warning against entry. The on-site project staff monitors the site to prevent entry. The leased property boundary was considered the ambient air impact boundary for air dispersion modeling purposes.

### 7.3.2 Receptors

Receptors were established to determine maximum ambient air concentrations. A coarse receptor grid with 100 meter spacing was established across the entire evaluated area. A refined receptor grid with spacing of 25 meters was established along the leased property boundary.

## 7.4 Elevation Data

Where available, topography elevation data from site drawings were used as inputs to the model. Available site elevations included discharge elevations, rooftop elevations, and ground surface elevations in vicinity of sources and structures. Receptor elevations were determined from topography information obtained from the USGS as a 7.5 minute digital elevation model (DEM). AERMAP was used to pre-process this data for use in AERMOD.

## 7.5 Meteorological Data

Upper air data from the Boise airport and surface data from Joslin Field in Twin Falls, Idaho for years 2000 through 2004 were preprocessed by LPG Associates

using AERMET and provided by IDEQ for use in this project. The output files provided by IDEQ were used as inputs to the AERMOD model for this site.

## 7.6 Land Use Classification

The area surrounding the proposed project sites is A2 – agricultural rural. The majority of the 3km radius around the dairy operations is largely agricultural or undeveloped, with the ground cover being mostly wild grasses, weeds and shrubs, and sparsely located trees.

## 7.7 Background Concentrations

Background concentrations were not necessary since a Full Impact Analysis (FIA) was not completed.

## 7.8 Evaluation of Compliance With Short-Term Standards

The results of the analysis to determine maximum 5 year average daily 1 hour average $NO_2$ and $SO_2$ incremental increase values are summarized in Table 7-2 below. Detailed modeling and calculations can be found on the CD in Appendix 4. This analysis demonstrated the net impact associated with the proposed modification does not exceed any of the established SILs; therefore, no further modeling is necessary.

**Table 7-2**
**Results of Short-term Modeling Analysis for $SO_2$ and $NO_2$**

| Pollutant | Averaging Period | Maximum Modeled 5 yr Average of Daily Maximum 1 hr Values | Interim EPA SIL (µg/m³) |
|---|---|---|---|
| $SO_2$ | 1 hr | 3.75 | 7.8 |
| $NO_2$ | 1 hr | 3.15 | 7.5 |

## 7.9 Evaluation of Ambient Impact Assessment for TAPs

Acrolein was the only TAP with emissions that exceeded an applicable EL and required modeling. The maximum modeled concentration of acrolein was determined to be 1.71 µg/m$^3$ which is less than the AAC for acrolein of 12.5 µg/m$^3$. Electronic modeling files can be found in Appendix 4. Since the modeled concentration of acrolein was less than the applicable AAC the predicted ambient impact from TAP emissions from the proposed project modification is acceptable.

# Appendix 1

# Emission Calculations and Vendor Supplied Equipment Information

# New Energy One Biogas Project - Modification
## Calculation Input Assumptions

MSE
Millennium Science & Engineering, Inc.

### Digester

| | | |
|---|---|---|
| Peak daily gas generation from digester | 1,100,000 | cf/day |
| Peak annual gas production | 402 | MMcf/year |
| Biogas heat value | 565 | Btu/cf |
| Biogas heat content | 431,597 | Btu/min |
| Peak hourly heat energy in biogas | 25.9 | MMBtu/hr |

### Emission Sources

| | Emission Units (EU) | | | |
|---|---|---|---|---|
| | 1 | 2 | 3 | 4 |
| Source type | Genset | Genset | Boiler | Flare |
| Model number | CAT 3520 | CAT 3520 | Columbia | Shand&Jurs 97300 (or equivalent) |
| Break Horsepower | 2,233 | 2,233 | 125 | |
| Hourly Equipment Peak Input Biogas Capacity (cf/hr) | 25,000 | 25,000 | 9,292 | 59,292 |
| Peak Biogas Heat Input Capacity (Btu/hr) | 14.1 | 14.1 | 5.2 | 33.5 |
| Daily Peak Biogas Capacity (cf/day) | 600,000 | 600,000 | 223,008 | 1,423,008 |
| Annual Equipment Biogas Capacity (Mcf/year) | 219 | 219 | 81 | 519 |
| Estimated Annual Capacity Factor | 77% | 77% | 92% | 77% |
| Annual Estimated Peak Biogas Capacity (Mcf/year) | 163 | 163 | 75 | 402 |
| End of Stack Temperature (°F) w/ heat exchange | 350 | 350 | | |
| End of Stack Temperature (°F) w/o heat exchange | 898 | 898 | 350 | |
| Stack Height (ft) | 30 | 30.05 | 30 | 30 |
| Stack Diameter (in) | 14 | 14 | 14 | 24 |
| Exhaust Flow Rate at Capacity (cfm) w/o heat exchange | 12,476 | 12,476 | 1,677 | 10,790 |
| Exhaust Flow Rate at Capacity (cfm) w/ heat exchange | 7,440 | 7,440 | | |

### Modeled Parameter

| | | | | |
|---|---|---|---|---|
| Stack height (m) | 9.15 | 9.16 | 9.15 | 13.79[a] |
| Stack inside Diameter (m) | 0.36 | 0.36 | 0.36 | 0.61 |
| Stack exit velocity (m/s) | 35.37 | 35.37 | 7.97 | 17.45 |
| Stack gas temperature (°K) | 450 | 450 | 450 | 1273.15[a] |

**Notes:**

[a] Stack height for flare is effective release hight calculated by SCREEN3. The stack gas temperature is the default value listed in the SCREEN3 Model User'

# New Energy One Biogas Project - Modification
## Emission Total from All Sources

MSE
Millennium Science & Engineering, Inc.

| | Pollutant | Genset and Boiler Emissions (lb/hr) | Genset and Boiler Emissions (ton/yr) | Flare Emissions (lb/hr) | Flare Emissions (ton/yr) | TAP EL (lb/hr) | Exceed EL? |
|---|---|---|---|---|---|---|---|
| Primary Pollutants | PM10 | 0.35 | 1.21 | 0.45 | 1.53 | | |
| | PM2.5 | 0.35 | 1.21 | 0.45 | 1.53 | | |
| | $SO_2$ | 6.90 | 23.36 | 6.90 | 23.36 | | |
| | NOx | 10.78 | 35.90 | 2.28 | 7.71 | | |
| | $NO_2$ | 8.08 | 26.93 | 1.71 | 5.78 | | |
| | CO | 25.40 | 83.54 | 12.39 | 41.97 | | |
| | VOC | 8.32 | 27.22 | 4.70 | 15.91 | | |
| | Lead | | | | | | |
| Section 585 TAP | Acrolein | 1.45E-01 | 4.74E-01 | | | 1.70E-02 | Yes |
| | Barium, soluble compounds, as Ba | 4.09E-05 | 1.65E-04 | 2.61E-04 | 8.83E-04 | 3.30E-02 | No |
| | Biphenyl | 5.99E-03 | 1.96E-02 | | | 1.00E-01 | No |
| | 2-Chlorophenol (and all isomers) (ID) | 6.07E-07 | 2.02E-06 | 5.41E-07 | 1.83E-06 | 3.30E-02 | No |
| | Chromium metal - Including: | 1.30E-05 | 5.24E-05 | 8.30E-05 | 2.81E-04 | 3.30E-02 | No |
| | Cobalt metal, dust, and fume | 7.81E-07 | 3.15E-06 | 4.98E-06 | 1.69E-05 | 3.30E-03 | No |
| | Copper - Dusts & mists, as Cu | 7.90E-06 | 3.18E-05 | 5.04E-05 | 1.71E-04 | 6.70E-02 | No |
| | Cresols/Cresylic Acid (isomers and mixtures) | 3.58E-05 | 1.19E-04 | 3.19E-05 | 1.08E-04 | 1.47E+00 | No |
| | Cyclopentane | 6.41E-03 | 2.09E-02 | | | 1.15E+02 | No |
| | Dibutyl phthalate | 1.19E-06 | 3.97E-06 | 1.06E-06 | 3.59E-06 | 3.33E-01 | No |
| | Ethyl benzene | 1.14E-03 | 3.71E-03 | 1.29E-05 | 4.37E-05 | 2.90E+01 | No |
| | Manganese as Mn Dust & compounds | 3.53E-06 | 1.42E-05 | 2.25E-05 | 7.63E-05 | 3.33E-01 | No |
| | Mercury (vapors except Alkyl as Hg) | 2.42E-06 | 9.74E-06 | 1.54E-05 | 5.22E-05 | 3.00E-03 | No |
| | Molybdenum as Mo -Soluble compounds | 1.02E-05 | 4.12E-05 | 6.52E-05 | 2.21E-04 | 3.33E-01 | No |
| | Methanol | 7.06E-02 | 2.31E-01 | | | 1.73E+01 | No |
| | Hexane (n-Hexane) | 3.14E-02 | 1.02E-01 | | | 1.20E+01 | No |
| | Hydrogen sulfide | 9.46E-02 | 3.15E-01 | 8.43E-02 | 2.85E-01 | 9.33E-01 | No |
| | o-Methylcyclohexanone | 3.47E-02 | 1.13E-01 | | | 1.53E+01 | No |
| | Naphthalene | 2.11E-03 | 6.89E-03 | 3.69E-05 | 1.25E-04 | 3.33E+00 | No |
| | Nitrobenzene | 2.83E-07 | 9.43E-07 | 2.52E-07 | 8.55E-07 | 3.33E-01 | No |
| | Nonane | 3.11E-03 | 1.01E-02 | | | 7.00E+01 | No |
| | Octane | 9.92E-03 | 3.24E-02 | | | 9.33E+01 | No |
| | Pentane | 9.76E-02 | 3.37E-01 | 1.54E-01 | 5.22E-01 | 1.18E+02 | No |
| | Phenol | 6.89E-04 | 2.25E-03 | 9.53E-06 | 3.23E-05 | 1.27E+00 | No |
| | Pyridine | 4.76E-07 | 1.58E-06 | 4.24E-07 | 1.44E-06 | 1.00E+00 | No |
| | Selenium | 2.23E-07 | 8.99E-07 | 1.42E-06 | 4.82E-06 | 1.30E-02 | No |
| | Styrene monomer (ID) | 5.38E-07 | 1.79E-06 | 4.80E-07 | 1.62E-06 | 6.67E+00 | No |
| | Toluene (toluol) | 1.16E-02 | 3.80E-02 | 2.50E-04 | 8.48E-04 | 2.50E+01 | No |
| | Trimethyl benzene (mixed and individual isomers) | 2.01E-03 | 6.56E-03 | | | 8.20E+00 | No |
| | 2,2,4-Trimethyl-pentane | 7.06E-03 | 2.31E-02 | | | 2.33E+01 | No |
| | Xylene (o-, m-, p-isomers) | 5.23E-03 | 1.71E-02 | 1.72E-03 | 5.82E-03 | 2.90E+01 | No |
| Section 586 TAP | Aniline | 7.32E-06 | 3.21E-05 | 6.63E-06 | 2.90E-05 | 9.0E-04 | No |
| | Arsenic compounds | 1.71E-06 | 7.49E-06 | 9.17E-06 | 4.02E-05 | 1.5E-06 | Yes |
| | Benzene | 9.29E-03 | 4.07E-02 | 9.90E-05 | 4.34E-04 | 8.0E-04 | Yes |
| | Bis (2-chloro-1-methyl- ethyl) ether | 1.76E-06 | 7.71E-06 | 1.59E-06 | 6.98E-06 | 3.3E-04 | No |
| | Bis (2-ethylhexyl) phthalate | 4.56E-06 | 2.00E-05 | 4.13E-06 | 1.81E-05 | 2.8E-02 | No |
| | Cadmium and compounds | 9.40E-06 | 4.12E-05 | 5.04E-05 | 2.21E-04 | 3.7E-06 | Yes |
| | Carbon tetrachloride | 1.00E-06 | 4.39E-06 | 9.07E-07 | 3.97E-06 | 4.4E-04 | No |
| | Formaldehyde | 6.41E-04 | 2.81E-03 | 3.44E-03 | 1.51E-02 | 5.1E-04 | Yes |
| | Nickel | 1.80E-05 | 7.86E-05 | 9.63E-05 | 4.22E-04 | 2.7E-05 | Yes |
| | Dichloromethane (Methylenechloride) | 4.21E-04 | 1.85E-03 | | | 1.6E-03 | No |
| | 1,1,2,2,Tetrachloro-ethane | 5.22E-05 | 2.29E-04 | | | 1.1E-05 | Yes |
| | Tetrachloroethylene | 8.30E-07 | 3.63E-06 | 7.52E-07 | 3.29E-06 | 1.3E-02 | No |
| | 1,1,2 - trichloroethane | 2.03E-05 | 8.90E-05 | 1.84E-05 | 8.06E-05 | 4.2E-04 | No |
| | Vinyl Chloride | 3.14E-04 | 1.37E-03 | | | 1.2E-03 | No |

# New Energy One Biogas Project - Modification
## Change in Emissions Associated with Proposed Modifications

Millennium Science & Engineering, Inc.

| | Pollutant | Genset and Boiler Emissions | | | | Flare Emissions | | | |
|---|---|---|---|---|---|---|---|---|---|
| | | Change (lb/hr) | % Change | Change (T/yr) | % Change | Change (lb/hr) | % Change | Change (T/yr) | % Change |
| Primary Pollutants | PM10 | 0.1 | 18% | 0.0 | 0% | 0.1 | 19% | 0 | 0% |
| | PM2.5 | 0.1 | 18% | 0.0 | 0% | 0.1 | 19% | 0 | 0% |
| | $SO_2$ | -1.4 | -17% | -10.0 | -30% | -1.4 | -17% | -10 | -30% |
| | NOx | -1.7 | -14% | -14.6 | -29% | 0.4 | 19% | 0 | 0% |
| | $NO_2$ | -1.3 | -14% | -10.9 | -29% | 0.3 | 19% | 0 | 0% |
| | CO | 6.0 | 31% | 5.2 | 7% | 2.0 | 19% | 0 | 0% |
| | VOC | 1.4 | 21% | -0.6 | -2% | 0.8 | 19% | 0 | 0% |
| | Lead | | | | | | | | |
| Section 585 TAP | Acrolein | 2.8E-02 | 24% | 0.0 | 0% | | | | |
| | Barium, soluble compounds, as Ba | 0.0E+00 | 0% | 0.0 | 0% | 4.2E-05 | 19% | 0.0 | 0% |
| | Biphenyl | 1.1E-03 | 24% | 0.0 | 0% | | | | |
| | 2-Chlorophenol (and all isomers) (ID) | 1.1E-07 | 21% | 0.0 | 0% | 8.7E-08 | 19% | 0.0 | 0% |
| | Chromium metal - Including: | 0.0E+00 | 0% | 0.0 | 0% | 1.3E-05 | 19% | 0.0 | 0% |
| | Cobalt metal, dust, and fume | 0.0E+00 | 0% | 0.0 | 0% | 8.0E-07 | 19% | 0.0 | 0% |
| | Copper - Dusts & mists, as Cu | 0.0E+00 | 0% | 0.0 | 0% | 8.1E-06 | 19% | 0.0 | 0% |
| | Cresols/Cresylic Acid (isomers and mixtures) | 6.3E-06 | 21% | 0.0 | 0% | 5.2E-06 | 19% | 0.0 | 0% |
| | Cyclopentane | 1.2E-03 | 24% | 0.0 | 0% | 0.0E+00 | | | |
| | Dibutyl phthalate | 2.1E-07 | 21% | 0.0 | 0% | 1.7E-07 | 19% | 0.0 | 0% |
| | Ethyl benzene | 2.2E-04 | 24% | 0.0 | 0% | 2.1E-06 | 19% | 0.0 | 0% |
| | Manganese as Mn Dust & compounds | 0.0E+00 | 0% | 0.0 | 0% | 3.6E-06 | 19% | 0.0 | 0% |
| | Mercury (vapors except Alkyl as Hg) | 0.0E+00 | 0% | 0.0 | 0% | 2.5E-06 | 19% | 0.0 | 0% |
| | Molybdenum as Mo -Soluble compounds | 0.0E+00 | 0% | 0.0 | 0% | 1.1E-05 | 19% | 0.0 | 0% |
| | Methanol | 1.4E-02 | 24% | 0.0 | 0% | | | | |
| | Hexane (n-Hexane) | 6.0E-03 | 24% | 0.0 | 0% | | | | |
| | Hydrogen sulfide | -1.7E-02 | -15% | -0.1 | -30% | -1.7E-02 | -17% | -0.1 | -30% |
| | o-Methylcyclohexanone | 6.7E-03 | 24% | 0.0 | 0% | | | | |
| | Naphthalene | 4.0E-04 | 24% | 0.0 | 0% | 6.0E-06 | 19% | 0.0 | 0% |
| | Nitrobenzene | 5.0E-08 | 21% | 0.0 | 0% | 4.1E-08 | 19% | 0.0 | 0% |
| | Nonane | 6.0E-04 | 24% | 0.0 | 0% | | | | |
| | Octane | 1.9E-03 | 24% | 0.0 | 0% | | | | |
| | Pentane | 1.4E-02 | 17% | 0.0 | 0% | 2.5E-02 | 19% | 0.0 | 0% |
| | Phenol | 1.3E-04 | 24% | 0.0 | 0% | 1.5E-06 | 19% | 0.0 | 0% |
| | Pyridine | 8.3E-08 | 21% | 0.0 | 0% | 6.8E-08 | 19% | 0.0 | 0% |
| | Selenium | 0.0E+00 | 0% | 0.0 | 0% | 2.3E-07 | 19% | 0.0 | 0% |
| | Styrene monomer (ID) | 9.4E-08 | 21% | 0.0 | 0% | 7.7E-08 | 19% | 0.0 | 0% |
| | Toluene (toluol) | 2.2E-03 | 24% | 0.0 | 0% | 4.0E-05 | 19% | 0.0 | 0% |
| | Trimethyl benzene (mixed and individual isomers) | 3.8E-04 | 24% | 0.0 | 0% | | | | |
| | 2,2,4-Trimethyl-pentane | 1.4E-03 | 24% | 0.0 | 0% | | | | |
| | Xylene (o-, m-, p-isomers) | 1.0E-03 | 24% | 0.0 | 0% | 2.8E-04 | 19% | 0.0 | 0% |
| Section 586 TAP | Aniline | 0.0 | 0% | 0.0 | 0% | 0.00 | 0% | 0.0 | 0% |
| | Arsenic compounds | 0.0 | 0% | 0.0 | 0% | 0.00 | 0% | 0.0 | 0% |
| | Benzene | 0.0 | 0% | 0.0 | 0% | 0.00 | 0% | 0.0 | 0% |
| | Bis (2-chloro-1-methyl- ethyl) ether | 0.0 | 0% | 0.0 | 0% | 0.00 | 0% | 0.0 | 0% |
| | Bis (2-ethylhexyl) phthalate | 0.0 | 0% | 0.0 | 0% | 0.00 | 0% | 0.0 | 0% |
| | Cadmium and compounds | 0.0 | 0% | 0.0 | 0% | 0.00 | 0% | 0.0 | 0% |
| | Carbon tetrachloride | 0.0 | 0% | 0.0 | 0% | 0.00 | 0% | 0.0 | 0% |
| | Formaldehyde | 0.0 | 0% | 0.0 | 0% | 0.00 | 0% | 0.0 | 0% |
| | Nickel | 0.0 | 0% | 0.0 | 0% | 0.00 | 0% | 0.0 | 0% |
| | Dichloromethane (Methylenechloride) | 0.0 | 0% | 0.0 | 0% | | | | |
| | 1,1,2,2,Tetrachloro-ethane | 0.0 | 0% | 0.0 | 0% | | | | |
| | Tetrachloroethylene | 0.0 | 0% | 0.0 | 0% | 0.00 | 0% | 0% | 0% |
| | 1,1,2 - trichloroethane | 0.0 | 0% | 0.0 | 0% | 0.00 | 0% | 0% | 0% |
| | Vinyl Chloride | 0.0 | 0% | 0.0 | 0% | | | | |

# New Energy One Biogas Project - Modification
## Emission Unit Calculations - Genset EU1

MSE
Millennium Science & Engineering, Inc.

| | |
|---|---|
| Emission unit number | 1 |
| Source type | Genset |
| Model number | CAT 3520 |
| Break Horsepower | 2,233 bHP |

| | |
|---|---|
| Hourly Peak Biogas capacity (scf/hr) | 25,000 cf/hour |
| Daily peak biogas capacity (scf/day) | 600,000 cf/day |
| Annual peak biogas capacity (Mcf/year) | 219.00 MMcf/year |
| Annual Estimated peak biogas capacity (Mcf/year) | 163.31 MMcf/year |

| | Pollutant | Raw Biogas (lb/cf) | Control Factor | EF Un-Combusted Biogas (lb/cf) | EF Combust Products (lb/cf) | Comments | Emissions lbs/hr | Emissions tons/yr |
|---|---|---|---|---|---|---|---|---|
| Primary Pollutants | PM10 | | | | 5.64E-06 | AP-42 Section 3.2, Table 3.2-2 (includes filterable and condensible) | 0.14 | 0.46 |
| | PM2.5 | | | | 5.64E-06 | | 0.14 | 0.46 |
| | SO2 (1 hour and 24 hour) | | | | 1.16E-04 | Based on anticipated maximum H2S concentration | 2.91 | NA |
| | SO2 (annual) | | | | 1.16E-04 | Based on anticipated average H2S concentration | NA | 9.50 |
| | NOx | | | | 1.97E-04 | Vendor: NOx = 1 g/bhp-hour | 4.92 | 16.08 |
| | $NO_2$ | | | | 1.48E-04 | $NO_2$=75%NOx | 3.69 | 12.06 |
| | CO | | | | 4.92E-04 | Vendor: CO = 2.5 g/bhp-hour | 12.31 | 40.20 |
| | VOC | | | | 1.65E-04 | Vendor: VOC = 0.84 g/bhp-hour | 4.14 | 13.51 |
| | Lead | | | | NA | | | |
| Section 585 TAP | Acrolein | | | | 2.90E-06 | AP-42 Table 3.2-2 | 7.3E-02 | 2.37E-01 |
| | Biphenyl | | | | 1.20E-07 | AP-42 Table 3.2-2 | 3.0E-03 | 9.78E-03 |
| | 2-Chlorophenol (and all isomers) (ID) | 3.97E-10 | 97.2% | 1.11E-11 | | EF Uncombusted Biogas based on max concentration | 2.8E-07 | 9.07E-07 |
| | Cresols/Cresylic Acid (isomers and mixtures) | 2.34E-08 | 97.2% | 6.56E-10 | | EF Uncombusted Biogas based on max concentration | 1.6E-05 | 5.35E-05 |
| | Cyclopentane | | | | 1.28E-07 | AP-42 Table 3.2-2 | 3.2E-03 | 1.05E-02 |
| | Dibutyl phthalate | 7.78E-10 | 97.2% | 2.18E-11 | | EF Uncombusted Biogas based on max concentration | 5.4E-07 | 1.78E-06 |
| | Ethyl benzene | 9.47E-09 | 97.2% | 2.65E-10 | 2.24E-08 | EF Uncombusted Biogas based on max concentration | 5.7E-04 | 1.85E-03 |
| | Methanol | | | | 1.41E-06 | AP-42 Table 3.2-2 | 3.5E-02 | 1.15E-01 |
| | Hexane (n-Hexane) | | | | 6.27E-07 | AP-42 Table 3.2-2 | 1.6E-02 | 5.12E-02 |
| | Hydrogen sulfide | 6.18E-05 | 97.2% | 1.73E-06 | | EF Uncombusted Biogas based on max concentration | 4.3E-02 | 1.41E-01 |
| | o-Methylcyclohexanone | | | | 6.95E-07 | AP-42 Table 3.2-2 | 1.7E-02 | 5.67E-02 |
| | Naphthalene | 5.48E-10 | 97.2% | 1.53E-11 | 4.20E-08 | EF Uncombusted Biogas based on max concentration | 1.1E-03 | 3.43E-03 |
| | Nitrobenzene | 1.85E-10 | 97.2% | 5.18E-12 | | EF Uncombusted Biogas based on max concentration | 1.3E-07 | 4.23E-07 |
| | Nonane | | | | 6.22E-08 | AP-42 Table 3.2-2 | 1.6E-03 | 5.07E-03 |
| | Octane | | | | 1.98E-07 | AP-42 Table 3.2-2 | 5.0E-03 | 1.62E-02 |
| | Pentane | | | | 1.47E-06 | AP-42 Table 3.2-2 | 3.7E-02 | 1.20E-01 |
| | Phenol | 6.99E-09 | 97.2% | 1.96E-10 | 1.36E-08 | EF Uncombusted Biogas based on max concentration | 3.4E-04 | 1.12E-03 |
| | Pyridine | 3.11E-10 | 97.2% | 8.71E-12 | | EF Uncombusted Biogas based on max concentration | 2.2E-07 | 7.11E-07 |
| | Styrene monomer (ID) | 3.52E-10 | 97.2% | 9.85E-12 | | EF Uncombusted Biogas based on max concentration | 2.5E-07 | 8.04E-07 |
| | Toluene (toluol) | 3.58E-08 | 97.2% | 1.00E-09 | 2.31E-07 | EF Uncombusted Biogas based on max concentration | 5.8E-03 | 1.89E-02 |
| | Trimethyl benzene (mixed and individual | | | | 4.02E-08 | AP-42 Table 3.2-2 | 1.0E-03 | 3.28E-03 |
| | 2,2,4-Trimethyl-pentane | | | | 1.41E-07 | AP-42 Table 3.2-2 | 3.5E-03 | 1.15E-02 |
| | Xylene (o-, m-, p-isomers) | 2.21E-08 | 97.2% | 6.19E-10 | 1.04E-07 | EF Uncombusted Biogas based on max concentration | 2.6E-03 | 8.54E-03 |
| Section 586 TAP | Aniline | 6.29E-09 | 97.2% | 1.76E-10 | | EF Uncombusted Biogas based on average concen. | 3.3E-06 | 1.44E-05 |
| | Benzene | 2.63E-09 | 97.2% | 7.35E-11 | 2.49E-07 | EF Uncombusted Biogas based on average concen. | 4.6E-03 | 2.03E-02 |
| | 1,3-Butadiene | | | | 1.51E-07 | AP-42 Table 3.2-2 | 2.8E-03 | 1.23E-02 |
| | Bis (2-chloro-1-methyl- ethyl) ether | 1.51E-09 | 97.2% | 4.23E-11 | | EF Uncombusted Biogas based on average concen. | 7.9E-07 | 3.46E-06 |
| | Bis (2-ethylhexyl) phthalate | 3.92E-09 | 97.2% | 1.10E-10 | | EF Uncombusted Biogas based on average concen. | 2.0E-06 | 8.95E-06 |
| | Carbon tetrachloride | 8.60E-10 | 97.2% | 2.41E-11 | | EF Uncombusted Biogas based on average concen. | 4.5E-07 | 1.97E-06 |
| | Dichloromethane (Methylenechloride) | | | | 1.13E-08 | AP-42 Table 3.2-2 | 2.1E-04 | 9.23E-04 |
| | 1,1,2,2,Tetrachloro-ethane | | | | 1.40E-09 | EF Uncombusted Biogas based on average concen. | 2.6E-05 | 1.14E-04 |
| | Tetrachloroethylene | 7.13E-10 | 97.2% | 2.00E-11 | | EF Uncombusted Biogas based on average concen. | 3.7E-07 | 1.63E-06 |
| | 1,1,2 - trichloroethane | 1.75E-08 | 97.2% | 4.89E-10 | | EF Uncombusted Biogas based on average concen. | 9.1E-06 | 3.99E-05 |
| | Vinyl Chloride | | | | 8.42E-09 | EF Uncombusted Biogas based on average concen. | 1.6E-04 | 6.87E-04 |

**Notes:**

EF Un-Combused Biogas = Raw Biogas x (1-Control Factor)
585 TAP Emissions (lb/hr) = Hourly Peak Biogas Capacity x (EF Non-Combustion Biogas + EF Combustion Products
585 TAP Emissions (ton/yr) = Annual Estimated Peak Biogas Capacity x (EF Non-Combustion Biogas + EF Combustion )Products) / 2000 lb/to
586 TAP Emissions (ton/yr) = Annual Estimated Peak Biogas Capacity x (EF Non-Combustion Biogas + EF Combustion )Products) / 2000 lb/to
586 TAP Emissions (lb/hr) = 586 TAP Emissions (ton/yr) / 8760 hr/yr x 2000 lb/tor
Control Efficiency (AP42 Table 2.4-3 (2008 draft) **97.2% (IC Engines)**
Grain Loading Calculation 8.03E-03 gr/dscf

# New Energy One Biogas Project - Modification
## Emission Unit Calculations - Genset EU2

MSE
Millennium Science & Engineering, Inc.

| | |
|---|---|
| **Emission unit number** | 2 |
| **Source type** | Genset |
| **Model number** | CAT 3520 |
| **Break Horsepower** | 2,233 bHP |

| | | |
|---|---|---|
| **Hourly Peak Biogas capacity (scf/hr)** | 25,000 | cf/hour |
| **Daily peak biogas capacity (scf/day)** | 600,000 | cf/day |
| **Annual peak biogas capacity (Mcf/year)** | 219.00 | MMcf/year |
| **Annual Estimated peak biogas capacity (Mcf/year)** | 163.31 | MMcf/year |

| | Pollutant | Raw Biogas (lb/cf) | Control Factor | EF Un-Combusted Biogas (lb/cf) | EF Combust Products (lb/cf) | Comments | Emissions lbs/hr | Emissions tons/yr |
|---|---|---|---|---|---|---|---|---|
| Primary Pollutants | PM10 | | | | 5.64E-06 | AP-42 Section 3.2, Table 3.2-2 (includes filterable and | 0.14 | 0.46 |
| | PM2.5 | | | | 5.64E-06 | condensible) | 0.14 | 0.46 |
| | SO2 (1 hour and 24 hour) | | | | 1.16E-04 | Based on anticipated maximum H2S concentration | 2.91 | NA |
| | SO2 (annual) | | | | 1.16E-04 | Based on anticipated average H2S concentration | NA | 9.50 |
| | NOx | | | | 1.97E-04 | Vendor: NOx = 1 g/bhp-hour | 4.92 | 16.08 |
| | $NO_2$ | | | | 1.48E-04 | $NO_2$=75%NOx | 3.69 | 12.06 |
| | CO | | | | 4.92E-04 | Vendor: CO = 2.5 g/bhp-hour | 12.31 | 40.20 |
| | VOC | | | | 1.65E-04 | Vendor: VOC = 0.84 g/bhp-hour | 4.14 | 13.51 |
| | Lead | | | | NA | | | |
| Section 585 TAP | Acrolein | | | | 2.90E-06 | AP-42 Table 3.2-2 | 7.3E-02 | 2.37E-01 |
| | Biphenyl | | | | 1.20E-07 | AP-42 Table 3.2-2 | 3.0E-03 | 9.78E-03 |
| | 2-Chlorophenol (and all isomers) (ID) | 3.97E-10 | 97.2% | 1.11E-11 | | EF Uncombusted Biogas based on max concentration | 2.8E-07 | 9.07E-07 |
| | Cresols/Cresylic Acid (isomers and mixtures) | 2.34E-08 | 97.2% | 6.56E-10 | | EF Uncombusted Biogas based on max concentration | 1.6E-05 | 5.35E-05 |
| | Cyclopentane | | | | 1.28E-07 | AP-42 Table 3.2-2 | 3.2E-03 | 1.05E-02 |
| | Dibutyl phthalate | 7.78E-10 | 97.2% | 2.18E-11 | | EF Uncombusted Biogas based on max concentration | 5.4E-07 | 1.78E-06 |
| | Ethyl benzene | 9.47E-09 | 97.2% | 2.65E-10 | 2.24E-08 | EF Uncombusted Biogas based on max concentration | 5.7E-04 | 1.85E-03 |
| | Methanol | | | | 1.41E-06 | AP-42 Table 3.2-2 | 3.5E-02 | 1.15E-01 |
| | Hexane (n-Hexane) | | | | 6.27E-07 | AP-42 Table 3.2-2 | 1.6E-02 | 5.12E-02 |
| | Hydrogen sulfide | 6.18E-05 | 97.2% | 1.73E-06 | | EF Uncombusted Biogas based on max concentration | 4.3E-02 | 1.41E-01 |
| | o-Methylcyclohexanone | | | | 6.95E-07 | AP-42 Table 3.2-2 | 1.7E-02 | 5.67E-02 |
| | Naphthalene | 5.48E-10 | 97.2% | 1.53E-11 | 4.20E-08 | EF Uncombusted Biogas based on max concentration | 1.1E-03 | 3.43E-03 |
| | Nitrobenzene | 1.85E-10 | 97.2% | 5.18E-12 | | EF Uncombusted Biogas based on max concentration | 1.3E-07 | 4.23E-07 |
| | Nonane | | | | 6.22E-08 | AP-42 Table 3.2-2 | 1.6E-03 | 5.07E-03 |
| | Octane | | | | 1.98E-07 | AP-42 Table 3.2-2 | 5.0E-03 | 1.62E-02 |
| | Pentane | | | | 1.47E-06 | AP-42 Table 3.2-2 | 3.7E-02 | 1.20E-01 |
| | Phenol | 6.99E-09 | 97.2% | 1.96E-10 | 1.36E-08 | EF Uncombusted Biogas based on max concentration | 3.4E-04 | 1.12E-03 |
| | Pyridine | 3.11E-10 | 97.2% | 8.71E-12 | | EF Uncombusted Biogas based on max concentration | 2.2E-07 | 7.11E-07 |
| | Styrene monomer (ID) | 3.52E-10 | 97.2% | 9.85E-12 | | EF Uncombusted Biogas based on max concentration | 2.5E-07 | 8.04E-07 |
| | Toluene (toluol) | 3.58E-08 | 97.2% | 1.00E-09 | 2.31E-07 | EF Uncombusted Biogas based on max concentration | 5.8E-03 | 1.89E-02 |
| | Trimethyl benzene (mixed and individual | | | | 4.02E-08 | AP-42 Table 3.2-2 | 1.0E-03 | 3.28E-03 |
| | 2,2,4-Trimethyl-pentane | | | | 1.41E-07 | AP-42 Table 3.2-2 | 3.5E-03 | 1.15E-02 |
| | Xylene (o-, m-, p-isomers) | 2.21E-08 | 97.2% | 6.19E-10 | 1.04E-07 | EF Uncombusted Biogas based on max concentration | 2.6E-03 | 8.54E-03 |
| Section 586 TAP | Aniline | 6.29E-09 | 97.2% | 1.76E-10 | | EF Uncombusted Biogas based on average concen. | 3.3E-06 | 1.44E-05 |
| | Benzene | 2.63E-09 | 97.2% | 7.35E-11 | 2.49E-07 | EF Uncombusted Biogas based on average concen. | 4.6E-03 | 2.03E-02 |
| | 1,3-Butadiene | | | | 1.51E-07 | AP-42 Table 3.2-2 | 2.8E-03 | 1.23E-02 |
| | Bis (2-chloro-1-methyl- ethyl) ether | 1.51E-09 | 97.2% | 4.23E-11 | | EF Uncombusted Biogas based on average concen. | 7.9E-07 | 3.46E-06 |
| | Bis (2-ethylhexyl) phthalate | 3.92E-09 | 97.2% | 1.10E-10 | | EF Uncombusted Biogas based on average concen. | 2.0E-06 | 8.95E-06 |
| | Carbon tetrachloride | 8.60E-10 | 97.2% | 2.41E-11 | | EF Uncombusted Biogas based on average concen. | 4.5E-07 | 1.97E-06 |
| | Dichloromethane (Methylenechloride) | | | | 1.13E-08 | AP-42 Table 3.2-2 | 2.1E-04 | 9.23E-04 |
| | 1,1,2,2,Tetrachloro-ethane | | | | 1.40E-09 | EF Uncombusted Biogas based on average concen. | 2.6E-05 | 1.14E-04 |
| | Tetrachloroethylene | 7.13E-10 | 97.2% | 2.00E-11 | | EF Uncombusted Biogas based on average concen. | 3.7E-07 | 1.63E-06 |
| | 1,1,2 - trichloroethane | 1.75E-08 | 97.2% | 4.89E-10 | | EF Uncombusted Biogas based on average concen. | 9.1E-06 | 3.99E-05 |
| | Vinyl Chloride | | | | 8.42E-09 | EF Uncombusted Biogas based on average concen. | 1.6E-04 | 6.87E-04 |

**Notes:**

EF Un-Combused Biogas = Raw Biogas x (1-Control Factor)

585 TAP Emissions (lb/hr) = Hourly Peak Biogas Capacity x (EF Non-Combustion Biogas + EF Combustion Products

585 TAP Emissions (ton/yr) = Annual Estimated Peak Biogas Capacity x (EF Non-Combustion Biogas + EF Combustion )Products) / 2000 lb/to

586 TAP Emissions (ton/yr) = Annual Estimated Peak Biogas Capacity x (EF Non-Combustion Biogas + EF Combustion )Products) / 2000 lb/to

586 TAP Emissions (lb/hr) = 586 TAP Emissions (ton/yr) / 8760 hr/yr x 2000 lb/tor

Control Efficiency (AP42 Table 2.4-3 (2008 draft) **97.2% (IC Engines)**

Grain Loading Calculation 8.03E-03 gr/dscf

# New Energy One Biogas Project - Modification
## Emission Unit Calculations - Boiler EU3

MSE
Millennium Science & Engineering, Inc.

| | | | |
|---|---|---|---|
| **Emission unit number** | 3 | **Hourly Peak Biogas capacity (scf/hr)** | 9,292 cf/hour |
| **Source type** | Boiler | **Daily peak biogas capacity (scf/day)** | 223,008 cf/day |
| **Model number** | Columbia | **Annual peak biogas capacity (Mcf/year)** | 81.40 MMcf/year |
| **Break Horsepower** | 125 bHP | **Annual Estimated peak biogas capacity (Mcf/year)** | 74.89 MMcf/year |

| | Pollutant | Raw Biogas (lb/cf) | Control Factor | EF Un-Combusted Biogas (lb/cf) | EF Combust Products (lb/cf) | Comments | Emissions lbs/hr | Emissions tons/yr |
|---|---|---|---|---|---|---|---|---|
| Primary Pollutants | PM10 | | | | 7.60E-06 | AP42 Table 1.4-2 | 0.07 | 0.28 |
| | PM2.5 | | | | 7.60E-06 | | 0.07 | 0.28 |
| | SO2 (1 hour and 24 hour) | | | | 1.16E-04 | Based on anticipated maximum H2S concentration | 1.08 | NA |
| | SO2 (annual) | | | | 1.16E-04 | Based on anticipated average H2S concentration | NA | 4.36 |
| | NOx | | | | 1.00E-04 | AP42 Table 1.4-1 | 0.93 | 3.74 |
| | $NO_2$ | | | | 7.50E-05 | $NO_2$=75%NOx | 0.70 | 2.81 |
| | CO | | | | 8.40E-05 | AP42 Table 1.4-1 | 0.78 | 3.15 |
| | VOC | | | | 5.50E-06 | AP42 Table 1.4-2 | 0.05 | 0.21 |
| | Lead | | | | NA | | | |
| Section 585 TAP | Barium, soluble compounds, as Ba | | | | 4.40E-09 | AP42 Table 1.4-4 | 4.1E-05 | 1.65E-04 |
| | 2-Chlorophenol (and all isomers) (ID) | 3.97E-10 | 98.6% | 5.56E-12 | | EF Uncombusted Biogas based on max concentration | 5.2E-08 | 2.08E-07 |
| | Chromium metal - Including: | | | | 1.40E-09 | AP42 Table 1.4-4 | 1.3E-05 | 5.24E-05 |
| | Cobalt metal, dust, and fume | | | | 8.40E-11 | AP42 Table 1.4-4 | 7.8E-07 | 3.15E-06 |
| | Copper - Dusts & mists, as Cu | | | | 8.50E-10 | AP42 Table 1.4-4 | 7.9E-06 | 3.18E-05 |
| | Cresols/Cresylic Acid (isomers and | 2.34E-08 | 98.6% | 3.28E-10 | | EF Uncombusted Biogas based on max concentration | 3.0E-06 | 1.23E-05 |
| | Dibutyl phthalate | 7.78E-10 | 98.6% | 1.09E-11 | | EF Uncombusted Biogas based on max concentration | 1.0E-07 | 4.08E-07 |
| | Ethyl benzene | 9.47E-09 | 98.6% | 1.33E-10 | | EF Uncombusted Biogas based on max concentration | 1.2E-06 | 4.96E-06 |
| | Hydrogen sulfide | 6.18E-05 | 98.6% | 8.65E-07 | | EF Uncombusted Biogas based on max concentration | 8.0E-03 | 3.24E-02 |
| | Manganese as Mn Dust & compounds | | | | 3.80E-10 | AP42 Table 1.4-4 | 3.5E-06 | 1.42E-05 |
| | Mercury (vapors except Alkyl as Hg) | | | | 2.60E-10 | AP42 Table 1.4-4 | 2.4E-06 | 9.74E-06 |
| | Molybdenum as Mo -Soluble compounds | | | | 1.10E-09 | AP42 Table 1.4-4 | 1.0E-05 | 4.12E-05 |
| | Naphthalene | 5.48E-10 | 98.6% | 7.67E-12 | 6.10E-10 | EF Uncombusted Biogas based on max concentration | 5.7E-06 | 2.31E-05 |
| | Nitrobenzene | 1.85E-10 | 98.6% | 2.59E-12 | | EF Uncombusted Biogas based on max concentration | 2.4E-08 | 9.70E-08 |
| | Pentane | | | | 2.60E-06 | AP42 Table 1.4-4 | 2.4E-02 | 9.74E-02 |
| | Phenol | 6.99E-09 | 98.6% | 9.78E-11 | | EF Uncombusted Biogas based on max concentration | 9.1E-07 | 3.66E-06 |
| | Pyridine | 3.11E-10 | 98.6% | 4.35E-12 | | EF Uncombusted Biogas based on max concentration | 4.0E-08 | 1.63E-07 |
| | Selenium | | | | 2.40E-11 | AP42 Table 1.4-4 | 2.2E-07 | 8.99E-07 |
| | Styrene monomer (ID) | 3.52E-10 | 98.6% | 4.92E-12 | | EF Uncombusted Biogas based on max concentration | 4.6E-08 | 1.84E-07 |
| | Toluene (toluol) | 3.58E-08 | 98.6% | 5.01E-10 | 3.40E-09 | EF Uncombusted Biogas based on max concentration | 3.6E-05 | 1.46E-04 |
| | Xylene (o-, m-, p-isomers) | 2.21E-08 | 98.6% | 3.09E-10 | | EF Uncombusted Biogas based on max concentration | 2.9E-06 | 1.16E-05 |
| | Zinc oxide dust | | | | 2.90E-08 | AP42 Table 1.4-4 | 2.7E-04 | 1.09E-03 |
| Section 586 TAP | Aniline | 6.29E-09 | 98.6% | 8.81E-11 | | EF Uncombusted Biogas based on average concen. | 7.5E-07 | 3.30E-06 |
| | Arsenic compounds | | | | 2.00E-10 | AP42 Table 1.4-4 | 1.7E-06 | 7.49E-06 |
| | Benzene | 2.63E-09 | 98.6% | 3.68E-11 | 2.10E-09 | EF Uncombusted Biogas based on average concen. | 1.8E-05 | 8.00E-05 |
| | Bis (2-chloro-1-methyl- ethyl) ether | 1.51E-09 | 98.6% | 2.12E-11 | | EF Uncombusted Biogas based on average concen. | 1.8E-07 | 7.93E-07 |
| | Bis (2-ethylhexyl) phthalate | 3.92E-09 | 98.6% | 5.48E-11 | | EF Uncombusted Biogas based on average concen. | 4.7E-07 | 2.05E-06 |
| | Cadmium and compounds | | | | 1.10E-09 | AP42 Table 1.4-4 | 9.4E-06 | 4.12E-05 |
| | Carbon tetrachloride | 8.60E-10 | 98.6% | 1.20E-11 | | EF Uncombusted Biogas based on average concen. | 1.0E-07 | 4.51E-07 |
| | Formaldehyde | | | | 7.50E-08 | AP42 Table 1.4-3 | 6.4E-04 | 2.81E-03 |
| | Nickel | | | | 2.10E-09 | AP42 Table 1.4-4 | 1.8E-05 | 7.86E-05 |
| | Tetrachloroethylene | 7.13E-10 | 98.6% | 9.98E-12 | | EF Uncombusted Biogas based on average concen. | 8.5E-08 | 3.74E-07 |
| | 1,1,2 - trichloroethane | 1.75E-08 | 98.6% | 2.45E-10 | | EF Uncombusted Biogas based on average concen. | 2.1E-06 | 9.16E-06 |

**Notes:**

EF Un-Combused Biogas = Raw Biogas x (1-Control Factor)

585 TAP Emissions (lb/hr) = Hourly Peak Biogas Capacity x (EF Non-Combustion Biogas + EF Combustion Products

585 TAP Emissions (ton/yr) = Annual Estimated Peak Biogas Capacity x (EF Non-Combustion Biogas + EF Combustion )Products) / 2000 lb/to

586 TAP Emissions (ton/yr) = Annual Estimated Peak Biogas Capacity x (EF Non-Combustion Biogas + EF Combustion )Products) / 2000 lb/to

586 TAP Emissions (lb/hr) = 586 TAP Emissions (ton/yr) / 8760 hr/yr x 2000 lb/tor

Control Efficiency (AP42 Table 2.4-3 (2008 d **98.6% (Boiler)**

Grain Loading Calculation = 1.08E-02 gr/dscf

# New Energy One Biogas Project - Modification

## Emission Unit Calculations - Flare EU4

MSE
Millennium Science & Engineering, Inc.

| | | | |
|---|---|---|---|
| **Emission unit number** | 4 | **Hourly Peak Biogas capacity (scf/hr)** | 59,292 cf/hour |
| **Source type** | Flare | **Daily peak biogas capacity (scf/day)** | 1,423,008 cf/day |
| **Model number** | Shand&Jurs 97300 (or equivalent) | **Annual peak biogas capacity (Mcf/year)** | 519.40 MMcf/year |
| **Break Horsepower** | - bHP | **Annual Estimated peak biogas capacity (Mcf/year)** | 401.50 MMcf/year |

| | Pollutant | Raw Biogas (lb/cf) | Control Factor | EF Un-Combusted Biogas (lb/cf) | EF Combust Products (lb/cf) | Comments | Emissions lbs/hr | Emissions tons/yr |
|---|---|---|---|---|---|---|---|---|
| Primary Pollutants | PM10 | | | | 7.60E-06 | AP42 Table 1.4-2 | 0.45 | 1.53 |
| | PM2.5 | | | | 7.60E-06 | | 0.45 | 1.53 |
| | SO2 (1 hour and 24 hour) | | | | 1.16E-04 | Based on anticipated maximum H2S concentration | 6.90 | NA |
| | SO2 (annual) | | | | 1.16E-04 | Based on anticipated average H2S concentration | NA | 23.36 |
| | NOx | | | | 3.84E-05 | AP42 Table 13.5-1 | 2.28 | 7.71 |
| | $NO_2$ | | | | 2.88E-05 | $NO_2$=75%NOx | 1.71 | 5.78 |
| | CO | | | | 2.09E-04 | AP42 Table 13.5-2 | 12.39 | 41.97 |
| | VOC | 1.70E-07 | 97.7% | 1.66E-07 | 7.91E-05 | Sum of nonmethane VOCS | 4.70 | 15.91 |
| | Lead | | | | NA | | | |
| Section 585 TAP | Barium, soluble compounds, as Ba | | | | 4.40E-09 | AP42 Table 1.4-4 | 2.6E-04 | 8.83E-04 |
| | 2-Chlorophenol (and all isomers) (ID) | 3.97E-10 | 97.7% | 9.13E-12 | | EF Uncombusted Biogas based on max concentration | 5.4E-07 | 1.83E-06 |
| | Chromium metal - Including: | | | | 1.40E-09 | AP42 Table 1.4-4 | 8.3E-05 | 2.81E-04 |
| | Cobalt metal, dust, and fume | | | | 8.40E-11 | AP42 Table 1.4-4 | 5.0E-06 | 1.69E-05 |
| | Copper - Dusts & mists, as Cu | | | | 8.50E-10 | AP42 Table 1.4-4 | 5.0E-05 | 1.71E-04 |
| | Cresols/Cresylic Acid (isomers and mixtures) | 2.34E-08 | 97.7% | 5.39E-10 | | EF Uncombusted Biogas based on max concentration | 3.2E-05 | 1.08E-04 |
| | Dibutyl phthalate | 7.78E-10 | 97.7% | 1.79E-11 | | EF Uncombusted Biogas based on max concentration | 1.1E-06 | 3.59E-06 |
| | Ethyl benzene | 9.47E-09 | 97.7% | 2.18E-10 | | EF Uncombusted Biogas based on max concentration | 1.3E-05 | 4.37E-05 |
| | Hydrogen sulfide | 6.18E-05 | 97.7% | 1.42E-06 | | EF Uncombusted Biogas based on max concentration | 8.4E-02 | 2.85E-01 |
| | Manganese as Mn Dust & compounds | | | | 3.80E-10 | AP42 Table 1.4-4 | 2.3E-05 | 7.63E-05 |
| | Mercury (vapors except Alkyl as Hg) | | | | 2.60E-10 | AP42 Table 1.4-4 | 1.5E-05 | 5.22E-05 |
| | Molybdenum as Mo -Soluble compounds | | | | 1.10E-09 | AP42 Table 1.4-4 | 6.5E-05 | 2.21E-04 |
| | Naphthalene | 5.48E-10 | 97.7% | 1.26E-11 | 6.10E-10 | EF Uncombusted Biogas based on max concentration | 3.7E-05 | 1.25E-04 |
| | Nitrobenzene | 1.85E-10 | 97.7% | 4.26E-12 | | EF Uncombusted Biogas based on max concentration | 2.5E-07 | 8.55E-07 |
| | Pentane | | | | 2.60E-06 | AP42 Table 1.4-4 | 1.5E-01 | 5.22E-01 |
| | Phenol | 6.99E-09 | 97.7% | 1.61E-10 | | EF Uncombusted Biogas based on max concentration | 9.5E-06 | 3.23E-05 |
| | Pyridine | 3.11E-10 | 97.7% | 7.15E-12 | | EF Uncombusted Biogas based on max concentration | 4.2E-07 | 1.44E-06 |
| | Selenium | | | | 2.40E-11 | AP42 Table 1.4-4 | 1.4E-06 | 4.82E-06 |
| | Styrene monomer (ID) | 3.52E-10 | 97.7% | 8.09E-12 | | EF Uncombusted Biogas based on max concentration | 4.8E-07 | 1.62E-06 |
| | Toluene (toluol) | 3.58E-08 | 97.7% | 8.23E-10 | 3.40E-09 | EF Uncombusted Biogas based on max concentration | 2.5E-04 | 8.48E-04 |
| | Xylene (o-, m-, p-isomers) | 2.21E-08 | 97.7% | 5.08E-10 | | EF Uncombusted Biogas based on max concentration | 3.0E-05 | 1.02E-04 |
| | Zinc oxide dust | | | | 2.90E-08 | AP42 Table 1.4-4 | 1.7E-03 | 5.82E-03 |
| Section 586 TAP | Aniline | 6.29E-09 | 97.7% | 1.45E-10 | | EF Uncombusted Biogas based on average concen. | 6.6E-06 | 2.90E-05 |
| | Arsenic compounds | | | | 2.00E-10 | AP42 Table 1.4-4 | 9.2E-06 | 4.02E-05 |
| | Benzene | 2.63E-09 | 97.7% | 6.04E-11 | 2.10E-09 | EF Uncombusted Biogas based on average concen. | 9.9E-05 | 4.34E-04 |
| | Bis (2-chloro-1-methyl- ethyl) ether | 1.51E-09 | 97.7% | 3.48E-11 | | EF Uncombusted Biogas based on average concen. | 1.6E-06 | 6.98E-06 |
| | Bis (2-ethylhexyl) phthalate | 3.92E-09 | 97.7% | 9.01E-11 | | EF Uncombusted Biogas based on average concen. | 4.1E-06 | 1.81E-05 |
| | Cadmium and compounds | | | | 1.10E-09 | AP42 Table 1.4-4 | 5.0E-05 | 2.21E-04 |
| | Carbon tetrachloride | 8.60E-10 | 97.7% | 1.98E-11 | | EF Uncombusted Biogas based on average concen. | 9.1E-07 | 3.97E-06 |
| | Formaldehyde | | | | 7.50E-08 | AP42 Table 1.4-3 | 3.4E-03 | 1.51E-02 |
| | Nickel | | | | 2.10E-09 | AP42 Table 1.4-4 | 9.6E-05 | 4.22E-04 |
| | Tetrachloroethylene | 7.13E-10 | 97.7% | 1.64E-11 | | EF Uncombusted Biogas based on average concen. | 7.5E-07 | 3.29E-06 |
| | 1,1,2 - trichloroethane | 1.75E-08 | 97.7% | 4.02E-10 | | EF Uncombusted Biogas based on average concen. | 1.8E-05 | 8.06E-05 |

**Notes:**

EF Un-Combused Biogas = Raw Biogas x (1-Control Factor)

585 TAP Emissions (lb/hr) = Hourly Peak Biogas Capacity x (EF Non-Combustion Biogas + EF Combustion Products

585 TAP Emissions (ton/yr) = Annual Estimated Peak Biogas Capacity x (EF Non-Combustion Biogas + EF Combustion )Products) / 2000 lb/to

586 TAP Emissions (ton/yr) = Annual Estimated Peak Biogas Capacity x (EF Non-Combustion Biogas + EF Combustion )Products) / 2000 lb/to

586 TAP Emissions (lb/hr) = 586 TAP Emissions (ton/yr) / 8760 hr/yr x 2000 lb/tor

Control Efficiency (AP42 Table 2.4-3 (2008 draf **97.7% (Flare)**

Grain Loading Calculation = 1.08E-02 gr/dscf

# New Energy One Biogas Project - Modification
## SO2 Emission Factor Calculation

MSE
Millennium Science & Engineering, Inc.

**Assumptions for gas stream entering Gensets:**

700 ppm H2S concentration (short-term average)
700 ppm H2S concentration (long-term average)
385 scf gas/lb-mole
34 Molecular weight of H2S
64 Molecular weight of SO2

Short-term EF Calculation:

$$\frac{700 \text{ part H2S}}{1.00E+06 \text{ part biogas}} \times \frac{1 \text{ lb-mole}}{385 \text{ scf}} \times \frac{34 \text{ lb}}{1 \text{ lb-mole}} = \frac{6.18E-05 \text{ lb H2S}}{\text{scf of biogas}}$$

$$\frac{6.18E-05 \text{ lb H2S}}{1 \text{ scf of biogas}} \times \frac{64 \text{ mole SO2}}{34 \text{ mole H2S}} = \frac{1.16E-04 \text{ lb SO2}}{\text{scf of biogas}}$$

(assumes 100% conversion of H2S to SO2)

Long-Term EF Calculation:

$$\frac{700 \text{ part H2S}}{1.00E+06 \text{ part biogas}} \times \frac{1 \text{ lb-mole}}{385 \text{ scf}} \times \frac{34 \text{ lb}}{1 \text{ lb-mole}} = \frac{6.18E-05 \text{ lb H2S}}{\text{scf of biogas}}$$

$$\frac{6.18E-05 \text{ lb H2S}}{1 \text{ scf of biogas}} \times \frac{64 \text{ mole SO2}}{34 \text{ mole H2S}} = \frac{1.16E-04 \text{ lb SO2}}{\text{scf of biogas}}$$

(assumes 100% conversion of H2S to SO2)

# New Energy One Biogas Project - Modification

## TAP EF Calculation

| Compound | CAS | Molecular wieght | Partially Clean Biogas Avg Conc (ppbv)* | Partially Clean Biogas Max Conc (ppbv)* | Raw Biogas Avg Conc (ppbv)* | Raw Biogas Max Conc (ppbv)* | Selected Biogas Concentration (ppbv)** | Biogas Compound Mass Flow Rate (lb/scf biogas)*** | AP-42 (Boiler) | | AP-42 (Engine) | |
|---|---|---|---|---|---|---|---|---|---|---|---|---|
| | | | | | | | | | (lb/$10^6$ scf NG) | lb/cf biogas | (lb/ MMBtu) | lb/cf biogas |
| Acrolein | 107-02-8 | | | | | | | | | | 5.14E-03 | 2.90E-06 |
| Biphenyl | 92-52-4 | | | | | | | | | | 2.12E-04 | 1.20E-07 |
| Chlorobenzene | 108-90-7 | 112.56 | 1.48E+00 | | | | 1.48E+00 | 4.40E-10 | | | | |
| 2-Chlorophenol | 95-57-8 | 128.56 | 1.05E+00 | | 8.50E-01 | 1.17 | 1.17E+00 | 3.97E-10 | | | | |
| 3,4-Methylphenol (o,p-cresol) | 1319-77-3 | 108.14 | 7.45E+00 | | 1.80E+01 | 82.07 | 8.21E+01 | 2.34E-08 | | | | |
| Cyclopentane | 287-92-3 | | | | | | 0.00E+00 | | | | 2.27E-04 | 1.28E-07 |
| Di-n-butyl phthalate | 84-74-2 | 278.34 | 7.40E-01 | | 7.50E-01 | 1.06 | 1.06E+00 | 7.78E-10 | fna | | | |
| Ethylbenzene | 100-41-4 | 106.167 | 9.75E+00 | | 1.05E+01 | 33.81 | 3.38E+01 | 9.47E-09 | fna | | 3.97E-05 | 2.24E-08 |
| n-hexane | 110-54-3 | | | | | | 0.00E+00 | | | | 1.11E-03 | 6.27E-07 |
| Methanol | 67-56-1 | | | | | | 0.00E+00 | | | | 2.50E-03 | 1.41E-06 |
| Methylcyclohexane | 583-60-8 | | | | | | 0.00E+00 | | | | 1.23E-03 | 6.95E-07 |
| Naphthalene | 91-20-3 | 128.17 | 9.00E-01 | | 1.62E+00 | | 1.62E+00 | 5.48E-10 | 6.10E-04 | 6.10E-10 | 7.44E-05 | 4.20E-08 |
| Nitrobenzene | 98-95-3 | 123.06 | | | 5.50E-01 | 0.57 | 5.70E-01 | 1.85E-10 | | | | |
| Nonane | 111-84-2 | | | | | | 0.00E+00 | | | | 1.10E-04 | 6.22E-08 |
| Octane | 111-65-9 | | | | | | 0.00E+00 | | | | 3.51E-04 | 1.98E-07 |
| Pentane | 109-66-0 | | | | | | 0.00E+00 | | | | 2.60E-03 | 1.47E-06 |
| Phenol | 108-95-2 | 94.11 | 1.05E+01 | | 9.68E+00 | 28.14 | 2.81E+01 | 6.99E-09 | fna | | 2.40E-05 | 1.36E-08 |
| Pyridine | 110-86-1 | 79.1 | | | 1.49E+00 | 1.49 | 1.49E+00 | 3.11E-10 | | | | |
| Styrene | 100-42-5 | 104.15 | 1.28E+00 | | 4.50E-01 | 0.45 | 1.28E+00 | 3.52E-10 | | | | |
| Toluene | 108-88-3 | 92.14 | 2.23E+01 | | 4.33E+01 | 147.26 | 1.47E+02 | 3.58E-08 | 3.40E-03 | 3.40E-09 | 4.08E-04 | 2.31E-07 |
| Trimethylbenzene | 25551-13-7 | | | | | | 0.00E+00 | | | | 7.11E-05 | 4.02E-08 |
| 2,2,4-Trimethylpentane | 540-84-1 | | | | | | 0.00E+00 | | | | 2.50E-04 | 1.41E-07 |
| Xylenes (o,m,p isomers) | 1330-20-7 | 106.167 | 5.22E+00 | | 1.77E+01 | 78.89 | 7.89E+01 | 2.21E-08 | fna | | 1.84E-04 | 1.04E-07 |
| Aniline | 62-53-3 | 93.13 | 1.29E+01 | 2.56E+01 | 2.13E+01 | | 2.56E+01 | 6.29E-09 | fna | | | |
| Benzene | 71-43-2 | 78.11 | 5.85E+00 | 1.27E+01 | 4.20E+00 | | 1.27E+01 | 2.63E-09 | 2.10E-03 | 2.10E-09 | 4.40E-04 | 2.49E-07 |
| 1,3-Butadiene | 106-99-0 | | | | | | 0.00E+00 | | | | 2.67E-04 | 1.51E-07 |
| Bis (2-chloro-1-methyl- ethyl) ether | 108-60-1 | 171.06 | 3.15E+00 | 3.15E+00 | 3.35E+00 | | 3.35E+00 | 1.51E-09 | fna | | | |
| bis(2-Ethylhexyl)phthalate | 117-81-7 | 390.56 | 8.30E-01 | 3.80E+00 | 3.90E-01 | | 3.80E+00 | 3.92E-09 | fna | | | |
| Carbon Tetrachloride | 56-23-5 | 153.82 | 1.35E+00 | 2.12E+00 | 1.30E+00 | | 2.12E+00 | 8.60E-10 | | | | |
| Methylene Chloride | 75-09-2 | | | | | | 0.00E+00 | | | | 2.00E-05 | 1.13E-08 |
| 1,1,2,2-Tetracholoroethane | 79-34-5 | 167.85 | 6.80E-01 | 6.80E-01 | | | 6.80E-01 | 3.01E-10 | | | 2.48E-06 | 1.40E-09 |
| Tetrachloroethylene | 127-18-4 | 167.85 | 1.61E+00 | 1.61E+00 | 1.26E+00 | | 1.61E+00 | 7.13E-10 | | | | |
| 1,1,2- Trichloroethane | 79-00-5 | 133.4 | 2.42E+01 | 4.96E+01 | 3.16E+01 | | 4.96E+01 | 1.75E-08 | | | | |
| Vinyl Chloride | 75-04-3 | | | | | | 0.00E+00 | | | | 1.49E-05 | 8.42E-09 |
| 1,2,4-Trimethylbenzene | 95-63-6 | 120.19 | 3.08E+00 | | 1.20E+01 | | 1.20E+01 | 3.81E-09 | | | | |
| 1,3,5-Trimethylbenzene | 108-67-8 | 120.19 | 1.61E+00 | | 4.72E+00 | | 4.72E+00 | 1.50E-09 | | | | |
| 1-Methylnaphthalene | 90-12-0 | 142.2 | | | 3.08E+00 | | 3.08E+00 | 1.16E-09 | | | | |
| 2-Methylnaphthalene | 91-57-6 | 142.2 | | | 2.20E+00 | | 2.20E+00 | 8.25E-10 | | | | |
| Benzyl Alcohol | 100-51-6 | 108.14 | 4.63E+01 | | 5.08E+00 | | 4.63E+01 | 1.32E-08 | | | | |
| Diethylphthalate | 84-66-2 | 222.24 | 2.30E-01 | | 2.10E-01 | | 2.30E-01 | 1.35E-10 | | | | |
| Fluoranthene | 206-44-0 | 202.26 | | | 4.30E-01 | | 4.30E-01 | 2.29E-10 | | | | |
| Isopropylbenzene (cumene) | 98-82-8 | 120.19 | 1.11E+00 | | 3.56E+00 | | 3.56E+00 | 1.13E-09 | | | | |
| n-Butylbenzene | 104-51-8 | 134.22 | 1.36E+00 | | 3.55E+00 | | 3.55E+00 | 1.26E-09 | | | | |
| N-nitroso-di-n-propylamine | 621-64-7 | 130.19 | 6.40E-01 | | 6.80E-01 | | 6.80E-01 | 2.34E-10 | | | | |
| n-propylbenzene | 103-65-1 | 120.19 | 1.42E+00 | | 5.74E+00 | | 5.74E+00 | 1.82E-09 | | | | |
| Phenanthrene | 85-01-8 | 178.23 | | | 1.09E+00 | | 1.09E+00 | 5.13E-10 | | | | |
| p-Isopropyltoluene | 99-87-6 | 134.22 | 2.01E+01 | | 3.26E+00 | | 2.01E+01 | 7.13E-09 | | | | |
| sec-Butylbenzene | 135-98-8 | 134.22 | 9.60E-01 | | 3.83E+00 | | 3.83E+00 | 1.36E-09 | | | | |
| tert-Butylbenzene | 98-06-6 | 134.22 | 1.02E+00 | | 3.26E+00 | | 3.26E+00 | 1.15E-09 | | | | |
| Arsenic | | | | | | | | | 2.00E-04 | 2.00E-10 | | |
| Barium | | | | | | | | | 4.40E-03 | 4.40E-09 | | |
| Cadmium | | | | | | | | | 1.10E-03 | 1.10E-09 | | |
| Chromium | | | | | | | | | 1.40E-03 | 1.40E-09 | | |
| Cobalt | | | | | | | | | 8.40E-05 | 8.40E-11 | | |
| Copper | | | | | | | | | 8.50E-04 | 8.50E-10 | | |
| Formaldehyde | | | | | | | | | 7.50E-02 | 7.50E-08 | | |
| Hexane | | | | | | | | | 1.80E+00 | 1.80E-06 | | |
| Manganese | | | | | | | | | 3.80E-04 | 3.80E-10 | | |
| Mercury | | | | | | | | | 2.60E-04 | 2.60E-10 | | |
| Molybdenum | | | | | | | | | 1.10E-03 | 1.10E-09 | | |
| Nickel | | | | | | | | | 2.10E-03 | 2.10E-09 | | |
| Pentane | | | | | | | | | 2.60E+00 | 2.60E-06 | | |
| Selenium | | | | | | | | | 2.40E-05 | 2.40E-11 | | |
| Zinc | | | | | | | | | 2.90E-02 | 2.90E-08 | | |
| | | | | | | | Sum | 1.7E-07 | | | | |

* Source: GTI Pipeline Quality Biomethane: North American Guidance Document for Introduction of Dairy Waste Derived Biomethane Into Existing Natural Gas Networks

** Selected biogas concentration based on highest of either partially clean or raw biogas maximum concentrations for IDAPA 585 TAPs and the highest of either partially clean or raw biogas average concentrations for IDAPA 586 TAPs.

*** Biogas compound mass flow rate = (Selected biogas concentration (ppbv) / 1x10^9) x (1 lb-mole / 379 scf)

# G3520C

**GAS ENGINE TECHNICAL DATA**

CATERPILLAR®

| | | | |
|---|---|---|---|
| ENGINE SPEED: | 1200 | FUEL: | LOW ENERGY (1.43 CH4:CO2 RATIO) |
| COMPRESSION RATIO: | 11.3:1 | FUEL SYSTEM: | CAT LOW PRESSURE WITH AIR FUEL RATIO CONTROL |
| AFTERCOOLER - STAGE 1 MAX. INLET (°F): | 218 | FUEL PRESS. RANGE (PSIG): | 1.5 - 5.0 |
| AFTERCOOLER - STAGE 2 MAX. INLET (°F): | 130 | MIN. METHANE NUMBER: | 135 |
| JACKET WATER - MAX. OUTLET (°F): | 230 | RATED ALTITUDE (FT): | 1378 |
| COOLING SYSTEM: | JW+1AC, OC+2AC | AT AIR TO TURBO. TEMP. (°F): | 77 |
| IGNITION SYSTEM: | ADEM3 | NOx EMISSION LEVEL: | 0.5 g/bhp-hr |
| SPARK PLUG TYPE: | J-GAP | FUEL LHV (BTU/SCF): | 456 |
| EXHAUST MANIFOLD: | DRY | APPLICATION: | GENSET |
| COMBUSTION: | LOW EMISSION | | |

| RATING AND EFFICIENCY | | NOTES | LOAD | 100% | 75% | 50% |
|---|---|---|---|---|---|---|
| ENGINE POWER | (WITHOUT FAN) | (1) | BHP | 2233 | 1675 | 1116 |
| GENERATOR POWER | (WITHOUT FAN) | (2) | EKW | 1600 | 1200 | 800 |
| **ENGINE EFFICIENCY** | **(ISO 3046/1)** | **(3)** | **%** | **40.1** | **38.6** | **36.1** |
| ENGINE EFFICIENCY | (NOMINAL) | (3) | % | 39.1 | 37.7 | 35.2 |
| THERMAL EFFICIENCY | (NOMINAL) | (4) | % | 40.1 | 39.3 | 40.8 |
| TOTAL EFFICIENCY | (NOMINAL) | (5) | % | 79.2 | 77.0 | 76.0 |

| ENGINE DATA | | | | | | |
|---|---|---|---|---|---|---|
| **FUEL CONSUMPTION** | **(ISO 3046/1)** | **(6)** | **BTU/bhp-hr** | **6354** | **6592** | **7047** |
| FUEL CONSUMPTION | (NOMINAL) | (6) | BTU/bhp-hr | 6509 | 6753 | 7219 |
| AIR FLOW (77 °F, 14.7 psi) | | (7) | SCFM | 4512 | 3415 | 2286 |
| AIR FLOW | | (7) | lb/hr | 20006 | 15141 | 10136 |
| COMPRESSOR OUT PRESSURE | | | in. HG (abs) | 105.8 | 80.8 | 55.5 |
| COMPRESSOR OUT TEMPERATURE | | | °F | 375 | 306 | 220 |
| AFTERCOOLER AIR OUT TEMPERATURE | | | °F | 142 | 138 | 135 |
| INLET MAN. PRESSURE | | (8) | in. HG (abs) | 94.4 | 71.5 | 48.9 |
| INLET MAN. TEMPERATURE | (MEASURED IN PLENUM) | (9) | °F | 142 | 138 | 135 |
| TIMING | | (10) | °BTDC | 27 | 27 | 27 |
| EXHAUST STACK TEMPERATURE | | (11) | °F | 898 | 943 | 984 |
| EXHAUST GAS FLOW (@ stack temp.) | | (12) | CFM | 12476 | 9780 | 6770 |
| EXHAUST MASS FLOW | | (12) | lb/hr | 22318 | 16940 | 11418 |

| EMISSIONS DATA | | | | | |
|---|---|---|---|---|---|
| NOx (as NO2) | (13) | g/bhp-hr | 0.5 | 0.5 | 0.5 |
| NTE CO | (14) | g/bhp-hr | 4.13 | 4.25 | 4.4 |
| NOMINAL CO | (15) | g/bhp-hr | 2.5 | 2.5 | 2.5 |
| THC (molecular weight of 15.84) | (14) | g/bhp-hr | 5.84 | 6.49 | 7.51 |
| NMHC (molecular weight of 15.84) | (14) | g/bhp-hr | 0.88 | 0.98 | 1.13 |
| EXHAUST O2 | (16) | % DRY | 9.0 | 8.8 | 8.6 |
| LAMBDA | (16) | | 1.71 | 1.67 | 1.57 |

| HEAT BALANCE DATA | | | | | |
|---|---|---|---|---|---|
| LHV INPUT | (17) | BTU/min | 242216 | 188451 | 134313 |
| HEAT REJECTION TO JACKET | (18) | BTU/min | 28738 | 23806 | 21929 |
| HEAT REJECTION TO ATMOSPHERE | (19) | BTU/min | 7210 | 6034 | 4857 |
| HEAT REJECTION TO LUBE OIL | (20) | BTU/min | 10108 | 9524 | 8917 |
| HEAT REJECTION TO EXHAUST (LHV to 77°F) | (21) | BTU/min | 76779 | 65253 | 45101 |
| HEAT REJECTION TO EXHAUST (LHV to 350°F) | (21) | BTU/min | 54657 | 45140 | 32710 |
| HEAT REJECTION TO A/C - STAGE 1 | (22) | BTU/min | 13823 | 5157 | 102 |
| HEAT REJECTION TO A/C - STAGE 2 | (23) | BTU/min | 8895 | 5684 | 4086 |

**CONDITIONS AND DEFINITIONS**

ENGINE RATING OBTAINED AND PRESENTED IN ACCORDANCE WITH ISO 3046/1. DATA REPRESENTS CONDITIONS OF 77°F, 29.6 IN HG BAROMETRIC PRESSURE, 30% RELATIVE HUMIDITY, 10 IN H2O AIR FILTER RESTRICTION, AND 20 IN H2O EXHAUST STACK PRESSURE. ENGINE EFFICIENCY AND FUEL CONSUMPTION SPECIFICALLY NOTED AS ISO 3046/1 ARE REPRESENTED WITH 5 IN H2O AIR FILTER RESTRICTION AND 0 IN H2O EXHAUST STACK PRESSURE. CONSULT ALTITUDE CURVES FOR APPLICATIONS ABOVE MAXIMUM RATED ALTITUDE AND/OR TEMPERATURE. NO OVERLOAD PERMITTED AT RATING SHOWN.

EMISSION LEVELS ARE BASED ON THE ENGINE OPERATING AT STEADY STATE CONDITIONS AND ADJUSTED TO THE SPECIFIED NOx LEVEL AT 100% LOAD. EMISSION TOLERANCES SPECIFIED ARE DEPENDENT UPON FUEL QUALITY. METHANE NUMBER CANNOT VARY MORE THAN ± 3. PUBLISHED PART LOAD DATA IS WITH AIR FUEL RATIO CONTROL.

ENGINE RATING IS WITH 2 ENGINE DRIVEN WATER PUMPS. PUMP POWER IS NOT INCLUDED IN HEAT BALANCE DATA.

FOR NOTES INFORMATION CONSULT PAGE THREE.

## FUEL USAGE GUIDE

| CAT METHANE NUMBER | 40 | 50 | 60 | 70 | 80 | 90 | 100 | 110 | 120 | 130 | 140 | 150 |
|---|---|---|---|---|---|---|---|---|---|---|---|---|
| IGNITION TIMING | - | - | - | - | - | - | - | - | 24 | 26 | 28 | 30 |
| DERATION FACTOR | 0 | 0 | 0 | 0 | 0 | 0 | 0 | 0 | 1.00 | 1.00 | 1.00 | 1.00 |

## ALTITUDE DERATION FACTORS

| AIR TO TURBO (°F) | 0 | 1000 | 2000 | 3000 | 4000 | 5000 | 6000 | 7000 | 8000 | 9000 | 10000 | 11000 | 12000 |
|---|---|---|---|---|---|---|---|---|---|---|---|---|---|
| 130 | 0.96 | 0.93 | 0.89 | 0.86 | 0.83 | 0.79 | 0.76 | 0.74 | 0.71 | 0.68 | 0.65 | 0.63 | 0.60 |
| 120 | 0.98 | 0.94 | 0.91 | 0.87 | 0.84 | 0.81 | 0.78 | 0.75 | 0.72 | 0.69 | 0.66 | 0.64 | 0.61 |
| 110 | 0.99 | 0.96 | 0.92 | 0.89 | 0.86 | 0.82 | 0.79 | 0.76 | 0.73 | 0.70 | 0.68 | 0.65 | 0.62 |
| 100 | 1.00 | 0.97 | 0.94 | 0.90 | 0.87 | 0.84 | 0.81 | 0.77 | 0.74 | 0.72 | 0.69 | 0.66 | 0.63 |
| 90 | 1.00 | 0.99 | 0.96 | 0.92 | 0.89 | 0.85 | 0.82 | 0.79 | 0.76 | 0.73 | 0.70 | 0.67 | 0.65 |
| 80 | 1.00 | 1.00 | 0.97 | 0.94 | 0.90 | 0.87 | 0.84 | 0.80 | 0.77 | 0.74 | 0.71 | 0.68 | 0.66 |
| 70 | 1.00 | 1.00 | 0.99 | 0.96 | 0.92 | 0.89 | 0.85 | 0.82 | 0.79 | 0.76 | 0.73 | 0.70 | 0.67 |
| 60 | 1.00 | 1.00 | 1.00 | 0.97 | 0.94 | 0.90 | 0.87 | 0.83 | 0.80 | 0.77 | 0.74 | 0.71 | 0.68 |
| 50 | 1.00 | 1.00 | 1.00 | 0.99 | 0.96 | 0.92 | 0.88 | 0.85 | 0.82 | 0.79 | 0.76 | 0.73 | 0.70 |

ALTITUDE (FEET ABOVE SEA LEVEL)

## AFTERCOOLER HEAT REJECTION FACTORS

| AIR TO TURBO (°F) | 0 | 1000 | 2000 | 3000 | 4000 | 5000 | 6000 | 7000 | 8000 | 9000 | 10000 | 11000 | 12000 |
|---|---|---|---|---|---|---|---|---|---|---|---|---|---|
| 130 | 1.33 | 1.37 | 1.40 | 1.40 | 1.40 | 1.40 | 1.40 | 1.40 | 1.40 | 1.40 | 1.40 | 1.40 | 1.40 |
| 120 | 1.26 | 1.31 | 1.33 | 1.33 | 1.33 | 1.33 | 1.33 | 1.33 | 1.33 | 1.33 | 1.33 | 1.33 | 1.33 |
| 110 | 1.19 | 1.24 | 1.26 | 1.26 | 1.26 | 1.26 | 1.26 | 1.26 | 1.26 | 1.26 | 1.26 | 1.26 | 1.26 |
| 100 | 1.13 | 1.17 | 1.20 | 1.20 | 1.20 | 1.20 | 1.20 | 1.20 | 1.20 | 1.20 | 1.20 | 1.20 | 1.20 |
| 90 | 1.06 | 1.11 | 1.13 | 1.13 | 1.13 | 1.13 | 1.13 | 1.13 | 1.13 | 1.13 | 1.13 | 1.13 | 1.13 |
| 80 | 1.00 | 1.04 | 1.06 | 1.06 | 1.06 | 1.06 | 1.06 | 1.06 | 1.06 | 1.06 | 1.06 | 1.06 | 1.06 |
| 70 | 1.00 | 1.00 | 1.00 | 1.00 | 1.00 | 1.00 | 1.00 | 1.00 | 1.00 | 1.00 | 1.00 | 1.00 | 1.00 |
| 60 | 1.00 | 1.00 | 1.00 | 1.00 | 1.00 | 1.00 | 1.00 | 1.00 | 1.00 | 1.00 | 1.00 | 1.00 | 1.00 |
| 50 | 1.00 | 1.00 | 1.00 | 1.00 | 1.00 | 1.00 | 1.00 | 1.00 | 1.00 | 1.00 | 1.00 | 1.00 | 1.00 |

ALTITUDE (FEET ABOVE SEA LEVEL)

**FUEL USAGE GUIDE:**

This table shows the derate factor required for a given fuel. Note that deration occurs as the methane number decreases. Methane number is a scale to measure detonation characteristics of various fuels. The methane number of a fuel is determined by using the Caterpillar Methane Number Calculation program.

**ALTITUDE DERATION FACTORS:**

This table shows the deration required for various air inlet temperatures and altitudes. Use this information along with the fuel usage guide chart to help determine actual engine power for your site.

**INLET AND EXHAUST RESTRICTION CORRECTIONS FOR ALTITUDE CAPABILITY:**

To determine the appropriate altitude derate factor to be applied to this engine for inlet or exhaust restrictions differering from the standard conditions listed on page 1, a correction to the site altitude can be made to adjust for this difference. Add 141 feet to the site altitude for each additional inch of H2O of exhaust stack pressure greater than spec sheet conditions. Add 282 feet to the site altitude for each additional inch of H2O of inlet restriction greater than spec sheet conditions. If site inlet restriction or exhaust stack pressure are less than spec sheet conditions, the same trends apply to lower the site altitude.

**ACTUAL ENGINE RATING:**

It is important to note that the Altitude/Temperature deration and the Fuel Usage Guide deration are not cumulative. They are not to be added together. The same is true for the Low Energy Fuel deration (reference the Caterpillar Methane Number Program) and the Fuel Usage Guide deration. However, the Altitude/Temperature deration and Low Energy Fuel deration are cumulative; and they must be added together in the method shown below. To determine the actual power available, take the lowest rating between 1) and 2).

1) (Altitude/Temperature Deration) + (Low Energy Fuel Deration)
2) Fuel Usage Guide Deration

Note: For NA's always add the Low Energy Fuel deration to the Altitude/Temperature deration. For TA engines only add the Low Energy Fuel deration to the Altitude/Temperature deration whenever the Altitude/Temperature deration is less than 1.0 (100%). This will give the actual rating for the engine at the conditions specified.

**AFTERCOOLER HEAT REJECTION FACTORS:**

Aftercooler heat rejection is given for standard conditions of 77°F and 500 ft altitude. To maintain a constant air inlet manifold temperature, as the air to turbo temperature goes up, so must the heat rejection. As altitude increases, the turbocharger must work harder to overcome the lower atmospheric pressure. This increases the amount of heat that must be removed from the inlet air by the aftercooler. Use the aftercooler heat rejection factor to adjust for ambient and altitude conditions. Multiply this factor by the standard aftercooler heat rejection. Failure to properly account for these factors could result in detonation and cause the engine to shutdown or fail. For 2 Stage Aftercoolers with separate circuits, the 1st stage will collect 90% of the additional heat.

**NOTES**

1 ENGINE RATING IS WITH 2 ENGINE DRIVEN WATER PUMPS. TOLERANCE IS ± 3% OF FULL LOAD.

2 GENERATOR POWER DETERMINED WITH AN ASSUMED GENERATOR EFFICIENCY OF 96.1% AND POWER FACTOR OF 0.8 [GENERATOR POWER = ENGINE POWER x GENERATOR EFFICIENCY].

3 ISO 3046/1 ENGINE EFFICIENCY TOLERANCE IS (+)0, (-)5% OF FULL LOAD % EFFICIENCY VALUE. NOMINAL ENGINE EFFICIENCY TOLERANCE IS ± 2.5% OF FULL LOAD % EFFICIENCY VALUE.

4 THERMAL EFFICIENCY: JACKET HEAT + STAGE 1 A/C HEAT + EXH. HEAT TO 350°F.

5 TOTAL EFFICIENCY = ENGINE EFF. + THERMAL EFF. TOLERANCE IS ± 10% OF FULL LOAD DATA.

6 ISO 3046/1 FUEL CONSUMPTION TOLERANCE IS (+)5, (-)0% OF FULL LOAD DATA. NOMINAL FUEL CONSUMPTION TOLERANCE IS ± 2.5 % OF FULL LOAD DATA.

7 UNDRIED AIR. FLOW TOLERANCE IS ± 5 %

8 INLET MANIFOLD PRESSURE TOLERANCE IS ± 5 %

9 INLET MANIFOLD TEMPERATURE TOLERANCE IS ± 9°F.

10 TIMING INDICATED IS FOR USE WITH THE MINIMUM FUEL METHANE NUMBER SPECIFIED. CONSULT THE APPROPRIATE FUEL USAGE GUIDE FOR TIMING AT OTHER METHANE NUMBERS.

11 EXHAUST STACK TEMPERATURE TOLERANCE IS (+)63°F, (-)54°F.

12 WET EXHAUST. FLOW TOLERANCE IS ± 6 %

13 NOX TOLERANCES ARE ± 18 % OF SPECIFIED VALUE.

14 NTE CO, CO2, THC, and NMHC VALUES ARE "NOT TO EXCEED".

15 NOMINAL CO IS A NOMINAL VALUE AND IS REPRESENTATIVE OF A NEW ENGINE DURING THE FIRST 100 HOURS OF ENGINE OPERATION.

16 O2% TOLERANCE IS ± 0.5; LAMBDA TOLERANCE IS ± 0.05. LAMBDA AND O2 LEVEL ARE THE RESULT OF ADJUSTING THE ENGINE TO OPERATE AT THE SPECIFIED NOX LEVEL.

17 LHV RATE TOLERANCE IS ± 2.5%.

18 TOTAL JW HEAT (based on treated water) = JACKET HEAT + STAGE 1 A/C HEAT + 0.90 x (STAGE 1 + STAGE 2) x (ACHRF-1). TOLERANCE IS ± 10 % OF FULL LOAD DATA.

19 RADIATION HEAT RATE BASED ON TREATED WATER. TOLERANCE IS ± 50% OF FULL LOAD DATA.

20 LUBE OIL HEAT RATE BASED ON TREATED WATER. TOLERANCE IS ± 20% OF FULL LOAD DATA.

21 EXHAUST HEAT RATE BASED ON TREATED WATER. TOLERANCE IS ± 10% OF FULL LOAD DATA.

22 STAGE 1 A/C HEAT (based on treated water) = STAGE 1 A/C HEAT + 0.90 x (STAGE 1 + STAGE 2) x (ACHRF-1). TOLERANCE IS ± 5 % OF FULL LOAD DATA.

23 STAGE 2 A/C HEAT (based on treated water) = (STAGE 2 A/C HEAT + (STAGE 1 + STAGE 2) x 0.10 x (ACHRF - 1)) + LUBE OIL HEAT. TOLERANCE IS ± 5 % OF FULL LOAD DATA.

METRIC 267-7367

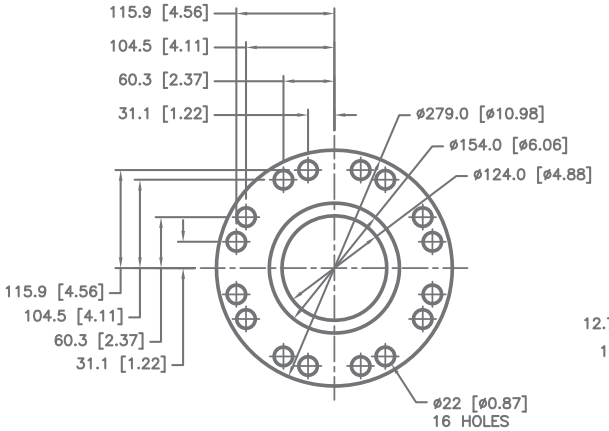


DETAIL OF JACKET WATER INLET/OUTLET FLANGE
SCALE 1=2

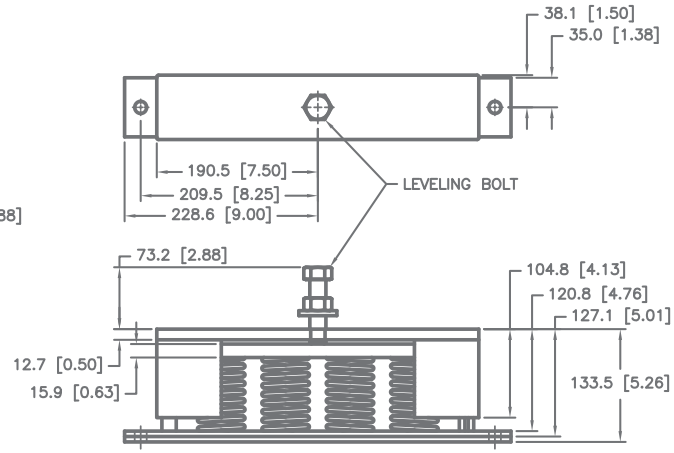


DETAIL OF MOUNTING ISOLATORS
(SHIPPED LOOSE)
F/U/W LA-4308
SCALE 1=2

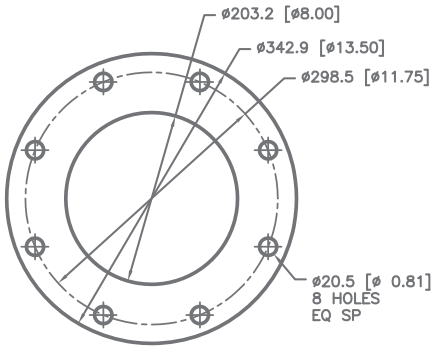


DETAIL OF FUEL INLET
SCALE 1=2

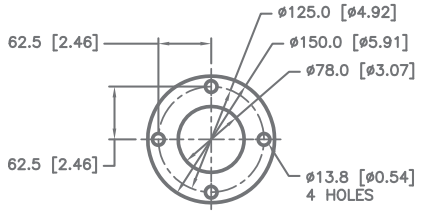


DETAIL OF SEPARATE CIRCUIT AFTERCOOLER INLET/OUTLET FLANGE
SCALE 1=2

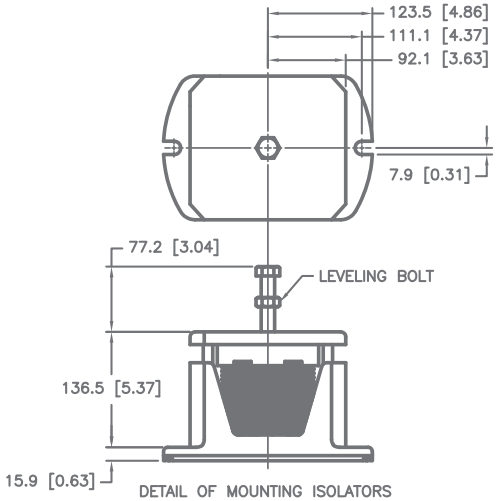


DETAIL OF MOUNTING ISOLATORS
(SHIPPED LOOSE)
F/U/W LE-6533
SCALE 1=2

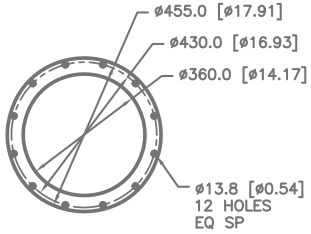


DETAIL OF EXHAUST FLANGE
SCALE 1=5

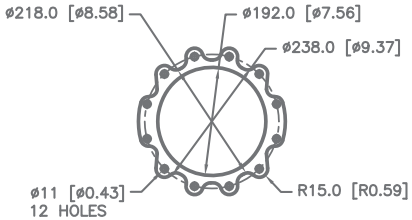


DETAIL OF AIR INLET FLANGE
SCALE 1=3

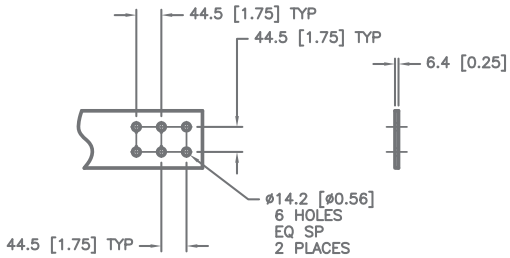


DETAIL OF 6 HOLE TERMINAL STRIP
F/U/W LE-6567 AND LE-6731
SCALE 1=3

CATERPILLAR INC.
267-7367

# COLUMBIA

## MULTI-PASS HORIZONTAL BOILERS

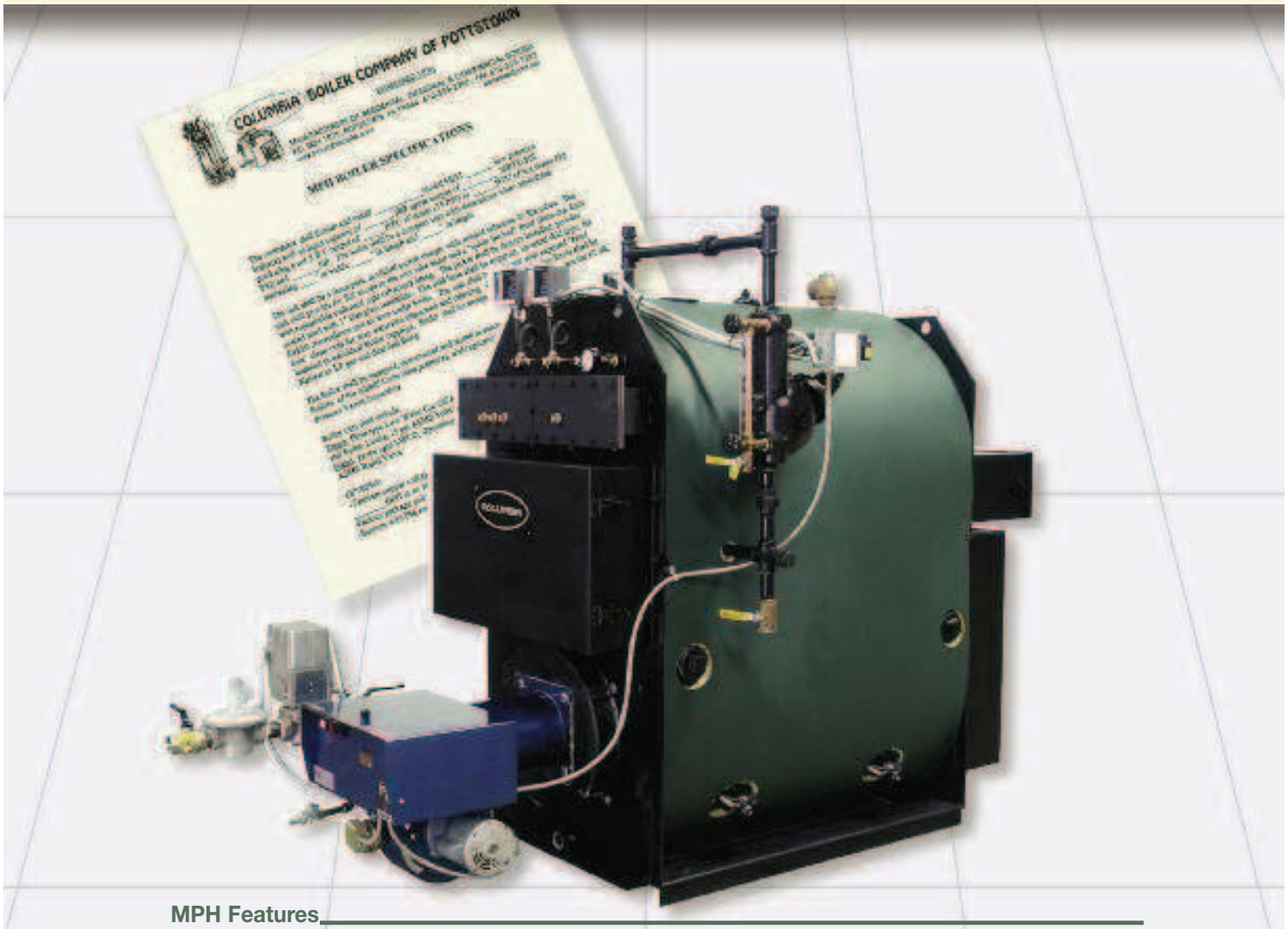


### MPH Features

- 32-1/2" Compact width permits installation through narrow doors and passageways (MPH 20-80)
- Inverted skid base for forklift handling and air flow with low profile
- Lifting holes for rigging into tough spots
- Bottom hand holes for thorough cleanout
- Top hand hole for tube inspection
- Quick open front turn around door for easy cleaning
- Cleanout door on flue box
- Trim for 15 psi steam or 30 psi water
- Natural gas, L.P., oil, or dual fuel firing
- Optional hot water coils 780 to 2460 G.P.M.
- Overflow tapping for steam unit
- Individual tapping for steam controls
- 83%+ efficiency. Up to 90%+ efficiency with H.E. trim
- Three pass, firetube construction
- Wet base design
- Welded tubes are schedule 40 pipe for long life (Rolled tubes available) 13 Gauge
- Fully packaged or knocked down
- Forced draft firing, no special vent requirements
- Constructed in accordance with requirements of Section IV of the Boiler and Pressure Vessel Code
- All boilers are inspected and stamped for conformity to the requirements of the National Board of Boiler and Pressure Vessel Inspectors and CSD-1.

*You can do BETTER with Columbia*

**GOOD people. BETTER Boilers. BEST value.**

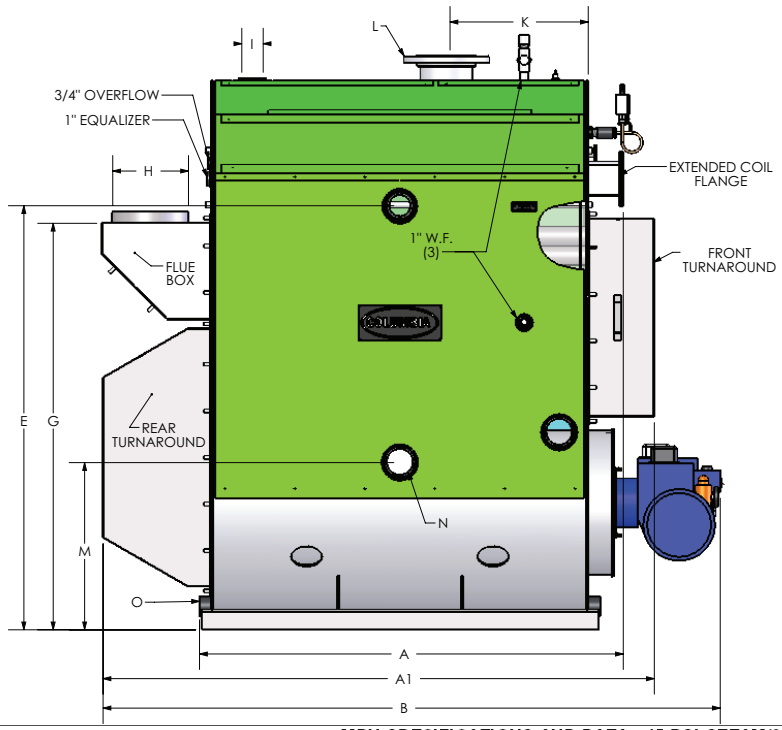


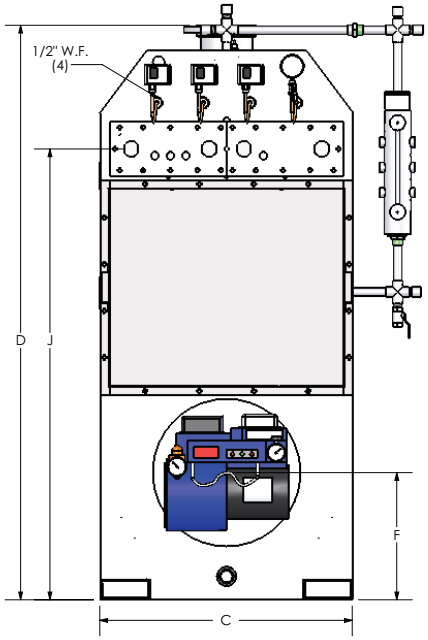


**MPH SPECIFICATIONS AND DATA - 15 PSI STEAM/30 PSI WATER**

| MODEL NUMBER | MPH-20 | MPH-30 | MPH-40 | MPH-50 | MPH-60 | MPH-70 | MPH-80 | MPH-90* | MPH-100* | MPH-125 |
|---|---|---|---|---|---|---|---|---|---|---|
| | | | | | | | | | | |
| Horsepower | 20 | 30 | 40 | 50 | 60 | 70 | 80 | 90 | 100 | 125 |
| Gas Input (BTU per hour) | 840,000 | 1,260,000 | 1,680,000 | 2,100,000 | 2,520,000 | 2,940,000 | 3,360,000 | 3,780,000 | 4,200,000 | 5,250,000 |
| Oil Input (Gal. per hour) | 6 | 9 | 12 | 15 | 18 | 21 | 24 | 27 | 30 | 38 |
| Gross Output (BTU per hour) | 688,800 | 1,033,200 | 1,377,600 | 1,722,000 | 2,066,400 | 2,410,800 | 2,755,200 | 3,099,600 | 3,444,000 | 4,305,000 |
| Gross Output Steam (Lbs. per hour) | 690 | 1,035 | 1,380 | 1,725 | 2,070 | 2,415 | 2,760 | 3,105 | 3,450 | 4,312 |
| Heating Surface - Sq. Ft. - Pipe | 88.5 | 120.6 | 159.0 | 205.4 | 255.0 | 299.9 | 341.7 | 439.9 | 439.9 | 590.0 |
| Heating Surface - Sq. Ft. - Tube | 78.5 | 105.7 | 138.8 | 178.4 | 221.0 | 260.0 | 295.8 | 379.4 | 379.4 | 508.0 |
| Furnace Volume - Cu. Ft. | 4.1 | 5.6 | 7.5 | 7.5 | 9.3 | 13.4 | 15.3 | 15.3 | 15.3 | 20.9 |
| Water Capacity Steam - Gal. | 126 | 121 | 161 | 190 | 238 | 291 | 333 | 559 | 559 | 549 |
| Steam Volume - Cu. Ft. | 6.1 | 6.7 | 8.9 | 8.9 | 11.2 | 13.0 | 14.9 | 10.9 | 10.9 | 17.9 |
| Water Capacity Flooded - Gal. | 172 | 171 | 227 | 257 | 321 | 388 | 444 | 640 | 640 | 683 |
| Number & Length 2" Sch. 40 Pipe | (42) 33" | (54) 37" | (54) 49" | (72) 49" | (72) 61" | (72) 71" | (72) 81" | (95) 81" | (95) 81" | (129 )80" |
| Hand Hole # and size | (3) 3x3.75 | (5) 3x3.75 | (5) 3x3.75 | (5) 3x3.75 | (5) 3x3.75 | (5) 3x3.75 | (5) 3x3.75 | (3) 3x3.75 | (3) 3x3.75 | (5) 3x3.375 |
| TANKLESS COIL DATA | | | | | | | | | | |
| Coil Model Number (1" Outlet) | N2 | N3 | N4 | N4 | N5 | N5 | N5 | N/A | N/A | N/A |
| GPM Single Coil - 100°Rise | 6.5 | 10 | 15 | 15 | 21 | 21 | 21 | | | |
| GPM Twin Coil - 100°Rise | 13 | 20 | 25 | 30 | 41 | 41 | 41 | | | |
| BOILER DIMENSIONS | | | | | | | | | | |
| A Bare Boiler (coil plate to drain outlet) | 39.3 | 42.6 | 54.6 | 54.6 | 66.6 | 76.6 | 86.6 | 83.6** | 83.6** | 95.1*** |
| A1 (Turnaround to Turnaround) | 56.0 | 59.0 | 71.0 | 71.0 | 83.0 | 94.0 | 104.0 | 105.3 | 105.3 | 110.5 |
| B Length (Turnaround to Gas Burner) | 69.0 | 80.0 | 92.0 | 99.9 | 111.9 | 128.5 | 136.8 | 137.8 | 137.8 | 147.0 |
| C Boiler Width | 32.5 | 32.5 | 32.5 | 32.5 | 32.5 | 32.5 | 32.5 | 40.5 | 40.5 | 51.0 |
| D Height Supply Outlet | 63.3 | 64.0 | 64.0 | 73.9 | 73.9 | 77.9 | 77.9 | 81.9 | 81.9 | 88.5 |
| E Minimum Safe Water Level | 47.1 | 47.1 | 47.1 | 54.6 | 54.6 | 58.1 | 58.1 | 64.0 | 64.0 | 67.5 |
| F Burner Opening to Floor | 15.4 | 16.4 | 16.4 | 16.4 | 16.4 | 17.4 | 17.4 | 17.4 | 17.4 | 19.8 |
| G Flue Box Height | 45.6 | 46.0 | 46.0 | 52.5 | 52.5 | 56.1 | 56.1 | 62.0 | 62.0 | 66.8 |
| H Flue Outlet Diameter | 10.0 | 10.0 | 10.0 | 10.0 | 10.0 | 12.0 | 12.0 | 14.0 | 14.0 | 14.0 |
| I Safety Valve Opening | 1.5 NPT | 1.5 NPT | 1.5 NPT | 2.5 NPT | 2.5 NPT | 2.5 NPT | 2.5 NPT | 2.5 NPT | 2.5 NPT | 2.5 NPT |
| J Coil Connections to Floor | 50.6 | 50.6 | 50.6 | 58.1 | 58.1 | 61.6 | 61.6 | N/A | N/A | N/A |
| K Supply Outlet Location | 11.3 | 14.3 | 15.3 | 18.3 | 18.3 | 20.3 | 23.3 | 23.3 | 23.3 | 23.4 |
| L Supply Outlet Size | 4 NPT | 4 NPT | 4 NPT | 6 Flange | 6 Flange | 6 Flange | 6 Flange | 8 Flange | 8 Flange | 8 Flange |
| M Return Inlet Height | 21.6 | 21.6 | 21.6 | 21.6 | 22.4 | 23.9 | 21.6 | 26.6 | 26.6 | 27.8 |
| N Return Inlet Size | 3 NPT | 3 NPT | 3 NPT | 3 NPT | 3 NPT | 3 NPT | 3 NPT | 4 NPT | 4 NPT | 4 NPT |
| O Drain Size | 1.5 NPT | 1.5 NPT | 1.5 NPT | 1.5 NPT | 1.5 NPT | 1.5 NPT | 1.5 NPT | 1.5 NPT | 1.5 NPT | 1.5 NPT |
| Boiler Dry Weight | 1915 | 2159 | 2666 | 3158 | 3790 | 4326 | 4851 | 6230 | 6230 | 7900**** |

*updated 09/25/09, MPH-90/100 is the new design
** measured from drain outlet to burner mount
*** measured from stripped down boiler
****welded pipe boiler

COLUMBIA

Manufactured in USA by
**COLUMBIA BOILER COMPANY**
P. O. Box 1070, Pottstown, PA 19464
610.323.2700 Fax: 610.323.7292
www.columbia boiler.com

REVISED 05/11/10

## Stack Gas Velocity For
### Gas And Oil FIred Boilers

| | | |
|---|---|---|
| Fuel: #"2" Oil, #"6" Oil, "G"as | g | 11990 |
| Flue Gas Temperature | | 350 |
| Dimensions of Stack Outlet (IN.) | | 14 |
| Fuel Input Rate (BTU /Hr) | | 5,250,000 |
| Altitude of Boiler, (Ft.) | | 700 |

| | | |
|---|---|---|
| **"S" Factor** | #2 Oil | 12,220 |
| | #6 Oil | 12,030 |
| | Gas | 11,990 |
| **"C" Factor** | #2 Oil | 11,548 |
| | #6 Oil | 11,495 |
| | Gas | 10,857 |

| | |
|---|---|
| *Standard Volume (SCFM)* | 1049.1 |
| *Temperature Correction* | 1.557692 |
| *Pressure Correction* | 1.02625 |
| ***Actual Volume (ACFM)*** | **1677.1** |
| Area of Stack (Sq. Ft.) | 1.07 |
| ***Stack Gas Velocity (FPM)*** | **1568.8** |
| *LB/HR* | **4721.1** |

## Combustion Air Required

| | |
|---|---|
| *"C" Factor* | 10857 |
| *Standard Air Volume (SCFM)* | 950.0 |
| *Pressure Correction* | 1.02625 |
| ***Actual Combustion Air Req'd (ACFM)*** | **974.9** |

**From:** Jay Kesting [JayKesting@wseco.com]
**Sent:** Thursday, August 05, 2010 8:21 AM
**To:** Troy Riecke
**Subject:** FW: Exhaust engine temperature

Troy,
Exhaust gas temperature will be 350F at the outlet of the heat recovery units. I'll try to obtain a sizing solution.

**Jay Kesting**
**Engine Business Manager**
**Western States Equipment Co.**
**Office 208-947-4519**
**Cell 208-559-4244**

---

**From:** Guy Selsmeyer [mailto:gselsmeyer@northernbiogas.com]
**Sent:** Thursday, August 05, 2010 7:20 AM
**To:** Jay Kesting
**Subject:** Re: Exhaust engine temperature

Jay,
The Cains are sized to drop the exhaust temp to 350 F. The model numbers are HEI910206 and UTR1-808A16SSP. I have put the 3520 recovery back in to give that extra cushion of BTUs.
Hope this helps, let me know if you need more.
Regards
Guy

Guy Selsmeyer P.E.
Northern Biogas LLC
Mobile: 920-309-1015
Office: 920-948-3216
Fax: 866-301-3075
www.northernbigoas.com

---

**From:** Jay Kesting <JayKesting@wseco.com>
**To:** Guy Selsmeyer <gselsmeyer@northernbiogas.com>
**Cc:** tdriecke@mse-env.com
**Sent:** Fri, July 30, 2010 5:00:28 PM
**Subject:** Exhaust engine temperature

Guy,

Tim's not here to ask. I was wondering if you had sent him info on the Cain units yet? Our air modeling will probably need to look at the proposed exhaust gas temperature and flow at the outlet of the heat recovery unit. That information should be on the proposal. We never did finish our discussion on leaving the heat recovery of the 3520 did we? Hell getting old.

**Jay Kesting**

**Engine Business Manager**

**Western States Equipment Co.**

**Office 208-947-4519**

**From:** Jim Van Den Berg [mailto:jvandenberg@northernbiogas.com]
**Sent:** Friday, August 13, 2010 6:27 AM
**To:** Penny Dennis
**Cc:** tdriecke@mse-env.com
**Subject:** boiler info

Penny

The 125 h.p. Columbia has a stack outlet diameter of 14". The estimated stack temperatures of this boiler operating at about 185 deg F water temperature will be around 260 deg at low fire and 350 deg at high fire.

I have attached a spreadsheet that has the stack exhaust info based on high fire, 5,250,000 btu input. I assume Jay will provide the info on the cat engines

Jim

Penny Dennis
VP Design Build
McAlvain Group of Companies
5559 W. Gowen Road
Boise, ID 83709
208.908.5956
208.908.5956 fax

SHAND&JURS

PRODUCT DATA SHEET

# 97300

Waste Gas Burner

- High Performance Stoichiometric Pilot
- No Flame Front Burn-out of Pilot Gas During Ignition
- Sizes 2” Through 12”
- Burns High Flow, Low BTU “Wet” Methane
- No Venturi Maintenance
- Minimizes Pilot Pipe Freeze Potential
- State-of-the-Art Digital Control
- Fully Automated Continuous or Intermitant Pilot
- Provides Alarm Outputs

## The Shand & Jurs 97300 Waste Gas Burner

The S&J 97300 Waste Gas Burner is specifically designed to operate efficiently with low BTU anaerobic digester waste gases. The 97300 helps to properly contain and incinerate waste gases thus minimizing odors and VOC’s.

Its stainless steel components withstand the severest of process environments. The S&J 97300 is especially designed for hydrogen sulfide and hot, wet methane which are the main components of digester gas streams in municipal waste water treatment facilities.

The 97300 is 100% U.S. made.

## Applications

**Anaerobic digester gas train**

**Fermentation off gas piping systems**

**Low pressure vent lines**


5911 Butterfield Road, Hillside, Illinois 60162 Phone: (708) 236-6000 Fax: (708)236-6006
E-mail: sales@ljtechnologies.com http:\\www.ljtechnologies.com
ISO 9001 Registered
PDS97300-2C

## SPECIFICATIONS

| | |
|---|---|
| Sizes: | 2”, 3”, 4”, 6”, 8”, 10”, and 12” |
| Stack Burner Connection: | ANSI 150lb. RF Flange |
| Contact Outputs: | |
| Flame Out: | SPDT, 120 VAC 2 Amp |
| Re-Start Alarm: | SPDT, 120 VAC 2 Amp |
| Power Requirements: | 120 VAC 5 Amp 60 Hz<br>220 VAC (option) |
| Controller: | |
| Temperature Range: | -20 to 150 degrees F |
| Enclosure: | Wall Mount NEMA 4 (Optional Nema 4X or 7) |
| Enclosure Material: | Carbon Steel |
| Options: | Manual Ignition<br>Remote Manual Ignition<br>Automatic Ignition (Restart Function)<br>Audible Restart Alarm<br>Heater and Thermostat |
| Stack Materials: | |
| Top Assembly and Pilot Nozzle: | Stainless Steel |
| Bottom Stack Assembly: | Carbon Steel (Optional Stainless Steel) |
| Pilot Gas: | Natural Gas (std)<br>LPG<br>Waste Gas (500 BTU/ Cubic foot Minimum) |
| Pilot Gas Pressure: | 5 to 10 PSIG STD<br>(Lower Pressures available) |

SHAND&JURS

PRODUCT DATA SHEET

# 97300

Waste Gas Burner

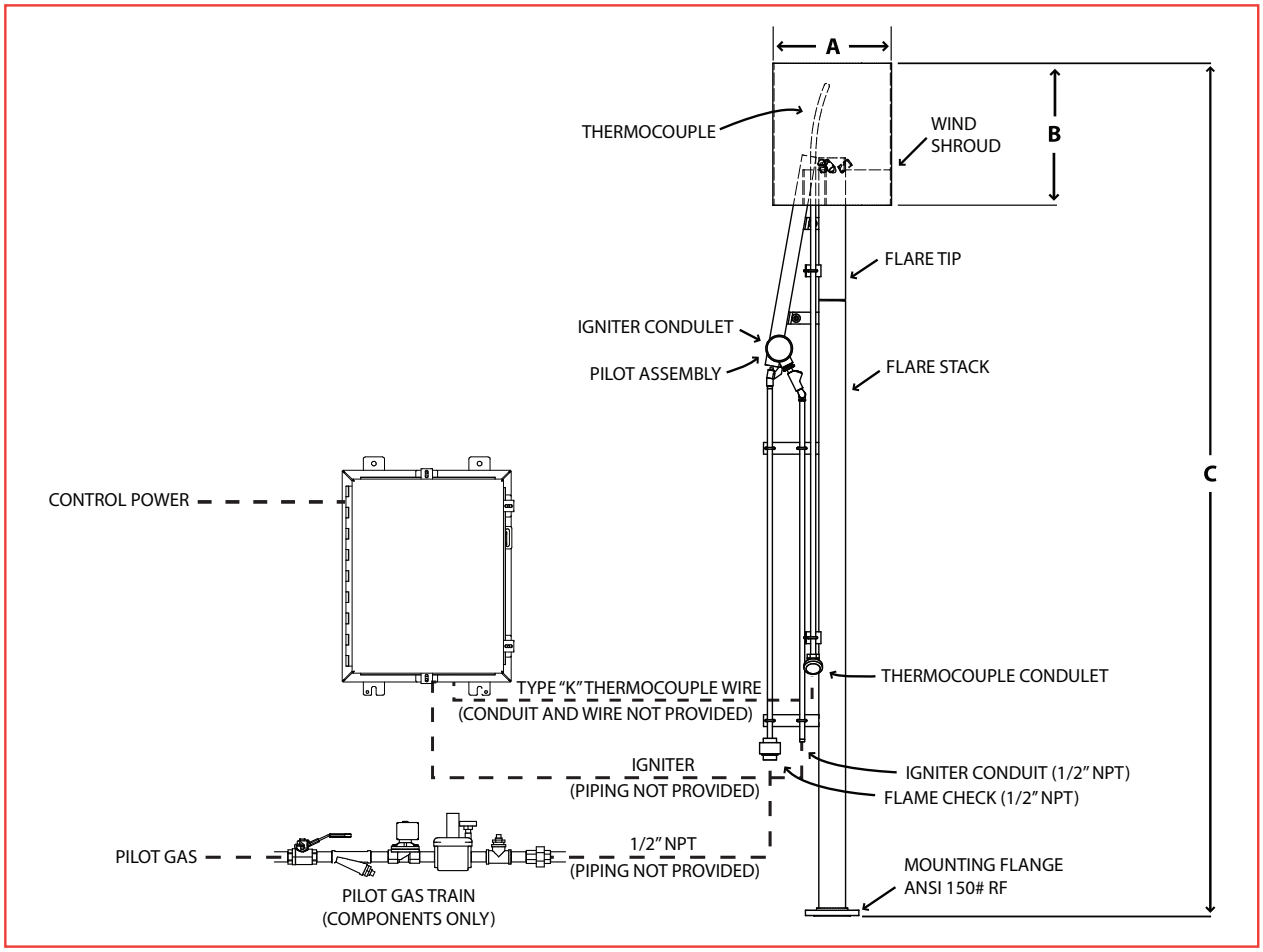


**Stack Dimensions**

| Size | A | B | D |
|---|---|---|---|
| 2" | 16" | 24" | 120" |
| 3" | 18" | 24" | 144" |
| 4" | 20" | 24" | 144" |
| 6" | 24" | 36" | 144" |
| 8" | 24" | 48" | 192" |
| 10" | 30" | 48" | 240" |
| 12" | 36" | 60" | 240" |

**STACK DIMENSIONS (typical)**

| CAPACITY ($FT^3$/Hr.) | |
|---|---|
| Size | Capacity |
| 2" | 3300 |
| 3" | 9970 |
| 4" | 19150 |
| 6" | 44200 |
| 8" | 76800 |
| 10" | 129000 |
| **12"** | 218600 |

**CAPACITY**

Flow specified in air at 60° F, 14.7 PSIA, .5" WC pressure drop


SHAND&JURS
an L&J Technologies Company
5911 Butterfield Road, Hillside, Illinois 60162 Phone: (708) 236-6000 Fax: (708)236-6006
E-mail: sales@ljtechnologies.com http:\\www.ljtechnologies.com


ISO 9001 Registered

PDS97300-2C

## CONTROL OPTIONS

**Manual Ignition:**

The operator initiates ignition by depressing the push-button on the controller. This causes the igniter to spark, igniting the pilot. Pilot-on is indicated by the flame-on indicator on the controller.

**Remote Ignition:**

Remote ignition is performed in the same manner as Manual Ignition, but with a remote push-button. The remote push-button is wired to terminals in the controller.

**Automatic Ignition:**

Automatic Ignition is performed by the system in reaction to a flameout condition. If the pilot switch is set to “Auto” and the system senses a flameout condition, it activates the igniter. The system will continue activating the igniter until a flame on condition is sensed or the auto start time out is reached. If the auto time out occurs prior to flame on the restart alarm is tripped.

**Accessories:**

A pressure (explosion) relief vent and flame trap should be installed directly at the flare inlet. The pilot gas line should be protected with a flame check.

## HOW TO ORDER

**97300 - AB - CD - EF - GH**

- AB: Pilot Gas
- CD: Unit Size
- EF: Power Source
- GH: Enclosure Rating
- EF: Control
- EF: Pilot
- GH: Blower
- GH: Additional Options

**TABLE Ia (A) PILOT GAS**

| OPTION | DESCRIPTION |
|---|---|
| 0 | Natural |
| 1 | Propane |
| 2 | Bio |

**TABLE 1b (B) UNIT SIZE**

| OPTION | DESCRIPTION |
|---|---|
| 2 | 2" |
| 3 | 3" |
| 4 | 4" |
| 5 | 6" |
| 7 | 8" |
| 8 | 10" |
| 9 | 12" |

**TABLE IIa (C) POWER SOURCE**

| OPTION | DESCRIPTION |
|---|---|
| 1 | 120 VAC, 60Hz |
| 2 | 220/240 VAC, 50/60Hz |

**TABLE IIb (D) ENCLOSURE RATING**

| OPTION | DESCRIPTION |
|---|---|
| 0 | NEMA 4 - CS |
| 1 | NEMA 7 - CAST STEEL |
| 2 | NEMA 4X- SS |

**TABLE IIIa (E) CONTROL**

| OPTION | DESCRIPTION |
|---|---|
| 1 | LOCAL - MANUAL START |
| 2 | Remote Control with NEMA 7 Pressure Switch Included |
| 3 | Remote Control (No Pressure Switch Included) Dry Contact |

**TABLE IIIb (F) PILOT**

| OPTION | DESCRIPTION |
|---|---|
| 1 | Continuous - Manual Start (Table E = 1) |
| 2 | Intermittent - Auto Start (Table E = 2 or 3) |

**TABLE IVa (G) BLOWER**

| OPTION | DESCRIPTION |
|---|---|
| 0 | No Blower - Standard |
| 1 | Blower - General Purpose Motor |
| 2 | Blower - NEMA 7 Motor |

**TABLE IVb (H) ADDITIONAL OPTIONS**

| OPTION | DESCRIPTION |
|---|---|
| 0 | None |
| 1 | Heater & Thermostat (Mounted within Enclosure) |
| 3 | NEMA 7 Spark Generation Enclosure |
| 5 | Options 1 and 3 Together |

Design subject to change without notice


5911 Butterfield Road, Hillside, Illinois 60162 Phone: (708) 236-6000 Fax: (708)236-6006
E-mail: sales@ljtechnologies.com http:\\www.ljtechnologies.com

## *H2S SAMPLES*

## *SITE: PAGELS PONDEROSA (4) IRON SPONGES*

| DATE | CFM | BEFORE IRON SPONGE | AFTER IRON SPONGE |
|---|---|---|---|
| 6/17/11 | 315 | 2600 | 250 |
| 6/18/11 | 300 | 1800 | 300 |
| 6/19/11 | 331 | 2000 | 350 |
| 6/20/11 | 310 | 1900 | 400 |
| 6/21/11 | 303 | 1800 | 390 |
| 6/22/11 | 290 | 1900 | 480 |
| 6/23/11 | 260 | 1600 | 200 |
| 6/27/11 | 300 | 1650 | 200 |
| 7/1/11 | 300 | 1550 | 450 |
| 7/5/11 | 298 | 1400 | 400 |
| 7/8/11 | 276 | 1500 | 400 |
| 7/12/11 | 250 | 1600 | 400 |

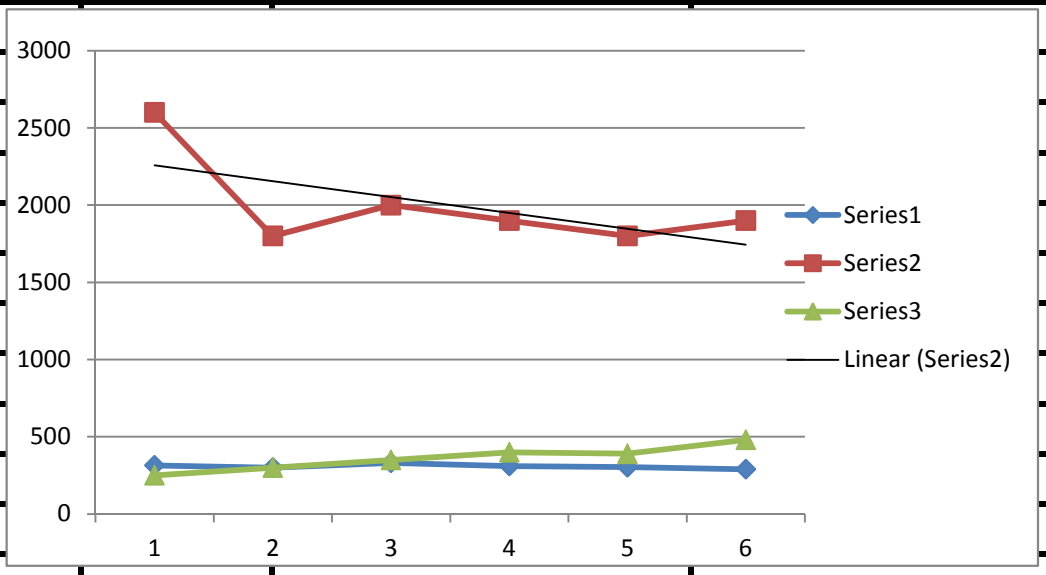

# Appendix 2

## Copy of Public Meeting Notice

# Affidavit of Publication

STATE OF IDAHO )
COUNTY OF TWIN FALLS) SS.

I, Ruby Aufderheide, being first duly sworn upon oath, depose and say that I am Legal Clerk of the TIMES-NEWS,published daily at, Twins Falls, Idaho, and do solemnly swear that a copy of the notice of advertisement, as per clipping attached, was published in the regular and entire issue of said newspaper, and not in any supplement thereof, for one ~~consecutive~~ publication, commencing with the issue dated 22nd day of October, 2011 and ending with the issue dated 22nd day of October, 2011

And I do further certify that said newspaper is a consolidation, effective February 16, 1942, of the Idaho Evening Times, published theretofore daily except Sunday, and the Twin Falls News, published theretofore daily except Monday, both of which newspapers prior to consolidation had been published under said names in said city and county continuously and uninterruptedly during a period of more than twelve consecutive months, and said TIMES-NEWS, since such consolidation, has been published as a daily newspaper except Saturday, until July 31, 1978, at which time said newspaper began daily publication under said name in said city and county continuously and uninterrupted.

And I further certify that pursuant to Section 60-108 Idaho Code, Thursday of each week has been designated as the day on which legal notice by law or by order of any court of competent jurisdiction within the state of Idaho to be issued thereof Thursday is announced as the day on which said legal will be published.

Ruby Aufderheide

Ruby Aufdeheide, Legal Clerk

STATE OF IDAHO
COUNTY OF TWIN FALLS

On this 24th day of October, 2011, before me,

a Notary Public, personally appeared Ruby Aufdeheide,
known or identified to me to be the person whose name subscribed to the within instrument, and being by me first duly sworn, declared that the statements therein are true, and acknowledged to me that he executed the same.

Linda Capps McGuire

Notary Public for Idaho
Residing at Twin Falls, Idaho.

My commision expires: 5-19-15

LINDA CAPPS-McGUIRE
NOTARY PUBLIC
STATE OF IDAHO

**PUBLIC NOTICE**
Public information meeting will be held for the New Energy One Project on November 1st at 10 AM at 3085 E Kimberly Rd., Twin Falls, ID 83301.
**PUBLISH:** October 22, 2011

# Appendix 3

# Modeling Protocol and IDEQ Response

**MSE** **Millennium Science & Engineering, Inc.**

**1555 Shoreline Drive, Suite 150**
**Boise, Idaho 83702**
**Phone: (208) 345-8292**
**Fax: (208) 344-8007**

May 19, 2011

Mr. Kevin Schilling
Stationary Source Air Modeling Coordinator
Idaho Department of Environmental Quality
1410 North Hilton
Boise, Idaho 83706

Re: Protocol for Air Dispersion Modeling to Support Application for PTC Modification, New Energy One, LLC, Rock Creek Dairy, Filer, Idaho

Dear Mr. Schilling:

Please find attached our proposed Air Modeling Protocol for air dispersion modeling that will be completed to support modification of the Permit to Construct (Permit No. P-2010.0076) for the New Energy One, LLC biogas project to be located at the Rock Creek Dairy in Filer, Idaho. The format of this document follows the format suggested in the December 31, 2002 "State of Idaho Air Quality Modeling Guideline."

We request that you review and approve this protocol. We will then proceed with modeling following the approved protocol. Please contact me at (208) 345-8292 or tdriecke@mse-env.com if you have any questions regarding this modeling protocol.

Sincerely,

Troy Riecke

Troy Riecke, P.E.
Project Engineer

CC: Jay Kesting, New Energy One, LLC
Darrin Mehr, Idaho Department of Environmental Quality

# Modeling Protocol
# New Energy One - Rock Creek Dairy Biogas Facility

## 1.0 Purpose

Air dispersion modeling is proposed to demonstrate compliance with National Ambient Air Quality Standards (NAAQS) for criteria pollutants and Idaho Department of Environmental Quality (IDEQ) standards for TAPs in support of a Permit to Construct (PTC) application and 15 day Pre-Permit Construction Approval for a proposed modification to the New Energy One, LLC biogas project located at the Rock Creek Dairy in Filer, Idaho.

## 2.0 Model Description / Justification

Air dispersion modeling will be performed using the United States Environmental Protection Agency (USEPA) AERMOD model (version 11103). AERMOD is the USEPA preferred air dispersion model for stationary sources listed in *Appendix W to 40 CFR Part 51 – Guidelines on Air Quality Models*. The Building Parameter Input Program for PRIME (BPIPPRM) version 04274 will be used to calculate appropriate building profiles to import into AERMOD. Terrain processing will be completed using AERMAP version 11103.

## 3.0 Emission and Source Data

The proposed modification includes construction of a second CAT 3520 genset engine instead of the three CAT 3412 genset engines originally proposed. The existing CAT 3520 genset engine, flare, and boiler will not change as part of the proposed modification. The sources will be fueled by biogas to be produced in an on-site digester. The proposed modification is not anticipated to increase the emission of any regulated air pollutants.

## 3.1 Basis for Stack Parameters

Stack parameters (diameter, discharge elevation, discharge temperature, fllowrate, and stack orientation) will be supported with project drawings, statements from equipment suppliers, and equipment cut sheets.

## 4.0 Receptor Network

A receptor network will be established so that ambient concentrations can be evaluated. The first step in this process is to determine the location of the ambient air boundary and the second step is to assign receptor locations within the ambient air zone.

### 4.1 Ambient Air Boundary

The facility is located within a 5-acre leased parcel located on an active dairy farm. The facility is staffed daily to monitor and maintain equipment. The perimeter of the project boundary will be denoted with signs indicating the area is private and warning against entry. The on-site project staff monitors the site to prevent entry. The leased property boundary will be considered the ambient air impact boundary for air dispersion modeling purposes. Previous modeling performed for this project conservatively assumed that any ambient air location could be a potential receptor location without consideration of the leased boundary.

There has been discussion between New Energy One and the IDEQ regarding use of the dairy property boundary as the ambient air boundary. At this time, New Energy One chooses not pursue this option but may reconsider it in the future if the modeling demonstration fails using the project's leased boundary.

### 4.2 Receptors

Receptors will be established to determine maximum ambient air concentrations. A receptor grid with approximately 300 feet spacing will be established across the entire evaluated area. Receptors along the ambient air boundary will be spaced approximately 75 feet apart. No receptors will be established within the facility's controlled property boundary.

## 5.0 Elevation Data

Topography data for the site will be obtained from the USGS as a 7.5 minute digital elevation model (DEM). AERMAP will be used to preprocess the data for use in AERMOD.

## 6.0 Meteorological Data

Surface meteorological data from the Twin Falls Joslin Field airport and upper air mixing height data from the Boise airport, provided by the IDEQ, will be used for modeling. This data should reasonably represent the meteorological conditions of the Filer facility.

## 7.0 Land Use Classification

The dairy is agricultural while the surrounding land is a mix of open space/agricultural land uses. Air dispersion modeling will be performed using a "rural" classification.

## 8.0 Evaluation of Compliance With Standards

A preliminary analysis (PA) will be completed for the proposed modification. The PA will be completed by modeling the existing permitted equipment configuration as negative emissions and the proposed equipment configuration as positive emissions. The net emission increase at each receptor location will be compared to the Significant Contribution Levels (SCRs) listed in IDAPA 58.01.01.006.107. If the net impact associated with the proposed modification does not exceed any of the established SCRs no further modeling will be necessary. If the modeled net concentration increase exceeds the SCRs then a full impact analysis (FIA) will be performed for all project emission sources. For the FIA, maximum modeled ambient air concentrations will be added to background concentrations to determine the ambient impact for comparison to NAAQS. No modeling of toxic air pollutants is anticipated since no change in emission rates of toxic air pollutants will occur as a result of the proposed modification.

## 9.0 Background Concentrations

Background ambient air concentrations for criteria pollutants will be requested from the IDEQ if a FIA is performed. Hourly background concentration files will be requested from the IDEQ for sulfur dioxide and nitrogen oxides pollutants.

STATE OF IDAHO
DEPARTMENT OF
ENVIRONMENTAL QUALITY

1410 NORTH HILTON, BOISE, ID 83706 · (208) 373-0502

C. L. "BUTCH" OTTER, GOVERNOR
TONI HARDESTY, DIRECTOR

May 24, 2011

**VIA EMAIL**

Troy Rieke, P.E.
Senior Environmental Engineer
Millenium Science and Engineering, Inc.
1555 Shoreline Drive, Suite 150
Boise, Idaho 83702

RE: Modeling Protocol for the 15-Day Pre-Permit PTC Application for Four Generator Sets, a Boiler, and a Flare for the Rock Creek Project for the New Energy Company, Located Near Filer, Idaho

Dear Mr. Rieke,

DEQ received a dispersion modeling protocol on May 19, 2011 for the Rock Creek Project. The protocol was submitted on behalf of the New Energy Company. The modeling protocol addendum includes additional information on the methods to be used in the Class II area ambient air impact analyses in support of a modification to the existing 15-Day Pre-Permit Construction Authorization Permit to Construct (PTC). The project proposes the construction of one Caterpillar 3520 biogas-fired engine in place of three smaller Caterpillar 3412 biogas-fired engines. All other emissions units addressed in the current PTC will remain unchanged. These emissions units will be located on a parcel of property leased from the Rock Creek Dairy.

The modeling protocol has been reviewed and DEQ has the following comments:

- **Comment 1: Ambient Air Boundary.** The methods described in the protocol addendum adequately establish the ambient air boundary for the facility located on leased property.

- **Comment 2: Receptor Spacing.** The refined modeling receptor grid spacing discussed in the protocol addendum meets the minimum recommendation listed in the Idaho Air Quality Modeling Guideline. A denser receptor grid may be warranted in the immediate region of the design concentration to verify that the maximum predicted ambient impact has been resolved. If DEQ conducts a sensitivity run using a receptor grid with denser spacing, and those results do not demonstrate compliance with applicable standards, the permit will be denied.

DEQ's modeling staff considers the submitted dispersion modeling protocol, with resolution of the additional items noted above, to be approved. The protocol approval is limited to the topics

and level of detail discussed in the modeling protocol, and it should be noted that the approval of the modeling protocol is not meant to imply approval of completed dispersion modeling analyses. Please refer to the *State of Idaho Air Quality Modeling Guideline*, which is available on the Internet at http://www.deq.state.id.us/air/permits forms/permitting/modeling_guideline.pdf, for further guidance.

To ensure a complete and timely review of any analyses submitted to the Idaho Department of Environmental Quality, our modeling staff requests that electronic copies of all modeling input and output files (including BPIP and AERMAP input and output files) be submitted with analyses reports. Also, please include a copy of the protocol and this approval notice with the submitted application. If you have any further questions or comments, please contact me at (208) 373-0536.

Sincerely,

Darrin Mehr

Darrin Mehr
Air Quality Analyst

# Appendix 4

## Electronic Copy of Model Input/Output

# Appendix 5

# Permit to Construct Application

**DEQ AIR QUALITY PROGRAM**
1410 N. Hilton, Boise, ID 83706
For assistance, call the
**Air Permit Hotline – 1-877-5PERMIT**

# PERMIT TO CONSTRUCT APPLICATION

Revision 3
04/03/07

*Please see instructions on page 2 before filling out the form.*

| DEQ USE ONLY |
|---|
| **Date Received** |
| **Project Number** |
| **Payment / Fees Included?** Yes ☐ No ☐ |
| **Check Number** |

## COMPANY NAME, FACILITY NAME, AND FACILITY ID NUMBER

| | | | |
|---|---|---|---|
| 1. Company Name | New Energy One, LLC | | |
| 2. Facility Name | New Energy One Biogas Facility | 3. Facility ID No. | 001-00235 |
| 4. Brief Project Description - One sentence or less | Modification to replace three small CAT 3412 gensets with one large CAT 3520 genset | | |

## PERMIT APPLICATION TYPE

5. ☐ New Facility ☐ New Source at Existing Facility ☐ Unpermitted Existing Source
☒ Modify Existing Source: Permit No.: P-2010.0076 Date Issued: March 30, 2011
☐ Required by Enforcement Action: Case No.:_____

6. ☒ Minor PTC ☐ Major PTC

## FORMS INCLUDED

| Included | N/A | Forms | DEQ Verify |
|---|---|---|---|
| ☒ | ☐ | Form GI – Facility Information | ☐ |
| ☒ | ☐ | Form EU0 – Emissions Units General | ☐ |
| ☒ | ☐ | Form EU1 - Industrial Engine Information<br>Please Specify number of forms attached: _____ | ☐ |
| ☐ | ☒ | Form EU2 - Nonmetallic Mineral Processing Plants<br>Please Specify number of forms attached: _____ | ☐ |
| ☐ | ☒ | Form EU3 - Spray Paint Booth Information<br>Please Specify number of forms attached: _____ | ☐ |
| ☐ | ☒ | Form EU4 - Cooling Tower Information<br>Please Specify number of forms attached: _____ | ☐ |
| ☒ | ☐ | Form EU5 – Boiler Information<br>Please Specify number of forms attached: _____ | ☐ |
| ☐ | ☒ | Form HMAP – Hot Mix Asphalt Plant<br>Please Specify number of forms attached: _____ | ☐ |
| ☐ | ☒ | Form CBP - Concrete Batch Plant<br>Please Specify number of forms attached: _____ | ☐ |
| ☐ | ☒ | Form BCE - Baghouses Control Equipment | ☐ |
| ☐ | ☒ | Form SCE - Scrubbers Control Equipment | ☐ |
| ☒ | ☐ | Forms EI-CP1 - EI-CP4 - Emissions Inventory– criteria pollutants<br>(Excel workbook, all 4 worksheets) | ☐ |
| ☒ | ☐ | PP – Plot Plan | ☐ |
| ☒ | ☐ | Forms MI1 – MI4 – Modeling<br>(Excel workbook, all 4 worksheets) | ☐ |
| ☒ | ☐ | Form FRA – Federal Regulation Applicability | ☐ |

**DEQ AIR QUALITY PROGRAM**
1410 N. Hilton, Boise, ID 83706
For assistance, call the
**Air Permit Hotline – 1-877-5PERMIT**

# PERMIT TO CONSTRUCT APPLICATION

Revision 3
03/26/07

*Please see instructions on page 2 before filling out the form.*

***All information is required. If information is missing, the application will not be processed.***

| IDENTIFICATION | |
|---|---|
| 1. Company Name | New Energy One, LLC |
| 2. Facility Name (if different than #1) | New Energy One Biogas Project |
| 3. Facility I.D. No. | 001-00235 |
| 4. Brief Project Description: | Replace three small CAT 3412 gensets with one large CAT 3520 genset. |
| **FACILITY INFORMATION** | |
| 5. Owned/operated by: (√ if applicable) | ☐ Federal government ☐ County government ☐ State government ☐ City government |
| 6. Primary Facility Permit Contact Person/Title | Jay Kesting |
| 7. Telephone Number and Email Address | 208-947-4519, jaykesting@wseco.com |
| 8. Alternate Facility Contact Person/Title | |
| 9. Telephone Number and Email Address | |
| 10. Address to which permit should be sent | 400 East Overland Road (c/o Western States Equipment Company) |
| 11. City/State/Zip | Meridian, Idaho 83642 |
| 12. Equipment Location Address (if different than #10) | 2175 E 3500 N |
| 13. City/State/Zip | Filer, Idaho 83328 |
| 14. Is the Equipment Portable? | ☐ Yes ☒ No |
| 15. SIC Code(s) and NAISC Code | Primary SIC: 4911 Secondary SIC (if any): NAICS: 22111 |
| 16. Brief Business Description and Principal Product | Biogas produced through the anaerobic digestion of manure waste is directed to generator sets to produce electricity. |
| 17. Identify any adjacent or contiguous facility that this company owns and/or operates | None |
| **PERMIT APPLICATION TYPE** | |
| 18. Specify Reason for Application | ☐ New Facility ☐ New Source at Existing Facility ☐ Unpermitted Existing Source<br>☒ Modify Existing Source: Permit No.: P-2010.0076 Date Issued: March 30, 2011<br>☐ Permit Revision<br>☐ Required by Enforcement Action: Case No.: |
| **CERTIFICATION** | |
| IN ACCORDANCE WITH IDAPA 58.01.01.123 (RULES FOR THE CONTROL OF AIR POLLUTION IN IDAHO), I CERTIFY BASED ON INFORMATION AND BELIEF FORMED AFTER REASONABLE INQUIRY, THE STATEMENTS AND INFORMATION IN THE DOCUMENT ARE TRUE, ACCURATE, AND COMPLETE. | |
| 19. Responsible Official's Name/Title | Jay Kesting |
| 20. RESPONSIBLE OFFICIAL SIGNATURE | Date: 10/21/11 |
| 21. ☒ Check here to indicate you would like to review a draft permit prior to final issuance. | |

**DEQ AIR QUALITY PROGRAM**
1410 N. Hilton, Boise, ID 83706
For assistance, call the
**Air Permit Hotline – 1-877-5PERMIT**

# PERMIT TO CONSTRUCT APPLICATION

Revision 3
03/27/07

*Please see instructions on page 2 before filling out the form.*

## IDENTIFICATION

| Company Name: | Facility Name: | Facility ID No: |
|---|---|---|
| New Energy One, LLC | New Energy One | 001-00235 |
| Brief Project Description: | Replace three small CAT 3412 gensets with one large CAT 3520 genset | |

## EMISSIONS UNIT (PROCESS) IDENTIFICATION & DESCRIPTION

| | |
|---|---|
| 1. Emissions Unit (EU) Name: | FLARE |
| 2. EU ID Number: | 4 |
| 3. EU Type: | ☐ New Source ☐ Unpermitted Existing Source<br>☒ Modification to a Permitted Source -- Previous Permit #:P-2010.0076 Date Issued: March 30, 2011 |
| 4. Manufacturer: | Shand & Jurs (or equivalent) |
| 5. Model: | 97300 (or equivalent) |
| 6. Maximum Capacity: | 1,423,008 CF/DAY |
| 7. Date of Construction: | TO BE CONSTRUCTED FOR PROJECT |
| 8. Date of Modification (if any) | NA |
| 9. Is this a Controlled Emission Unit? | ☒ No ☐ Yes If Yes, complete the following section. If No, go to line 18. |

## EMISSIONS CONTROL EQUIPMENT

| | | | |
|---|---|---|---|
| 10. Control Equipment Name and ID: | | | |
| 11. Date of Installation: | | 12. Date of Modification (if any): | NA |
| 13. Manufacturer and Model Number: | | | |
| 14. ID(s) of Emission Unit Controlled: | | | |
| 15. Is operating schedule different than emission units(s) involved? | ☐ Yes ☐ No | | |
| 16. Does the manufacturer guarantee the control efficiency of the control equipment? | ☐ Yes ☐ No (If Yes, attach and label manufacturer guarantee) | | |

| | Pollutant Controlled | | | | | |
|---|---|---|---|---|---|---|
| | PM | PM10 | $SO_2$ | NOx | VOC | CO |
| Control Efficiency | | | | | | |

17. If manufacturer's data is not available, attach a separate sheet of paper to provide the control equipment design specifications and performance data to support the above mentioned control efficiency.

## EMISSION UNIT OPERATING SCHEDULE (hours/day, hours/year, or other)

| | |
|---|---|
| 18. Actual Operation | IN AN EMERGENCY OR MAINTENANCE SITUATION |
| 19. Maximum Operation | EMISSIONS ESTIMATED FROM ANNUAL BIOGAS GENERATION |

## REQUESTED LIMITS

| | |
|---|---|
| 20. Are you requesting any permit limits? | ☐ Yes ☒ No (If Yes, check all that apply below) |
| ☐ Operation Hour Limit(s): | |
| ☐ Production Limit(s): | |
| ☐ Material Usage Limit(s): | |
| ☐ Limits Based on Stack Testing | Please attach all relevant stack testing summary reports |
| ☐ Other: | |
| 21. Rationale for Requesting the Limit(s): | NA |

Emissions Units - Industrial Engine Information **Form EU1**

**DEQ AIR QUALITY PROGRAM**
1410 N. Hilton, Boise, ID 83706
For assistance, call the
**Air Permit Hotline – 1-877-5PERMIT**

# PERMIT TO CONSTRUCT APPLICATION

Revision 3
03/27/07

*Please see instructions on page 2 before filling out the form.*

| IDENTIFICATION | | |
|---|---|---|
| Company Name: | Facility Name: | Facility ID No: |
| New Energy One, LLC | New Energy One Biogas Project | 001-00235 |
| Brief Project Description: | Replace three small CAT 3412 gensets with one large CAT | |

**EXEMPTION**

**Please refer to IDAPA 58.01.01.222.01.c and d for a list of internal combustion engines that are exempt from the Permit to Construct requirements.**

**ENGINE (EMISSION UNIT) DESCRIPTION AND SPECIFICATIONS**

1. Type of Unit: ☐ New Unit ☐ Unpermitted Existing Unit ☒ Modification to a Unit with Permit #:P-2010.0076 Date Issued:

2. Use of Engine: ☐ Normal Operation ☐ Emergency ☐ Back-up ☒ Other: Renewable Energy

| 3. Engine ID Number: | 4. Rated Power: | |
|---|---|---|
| 1 | ☒ 2,233 Brake Horsepower(bhp) | ☐ Kilowatts(kW) |

| 5. Construction Date: | 6. Manufacturer: | 7. Model: |
|---|---|---|
| Before July 1, 2007 | Caterpillar | G3520C |
| 8. Date of Modification (if applicable): | 9. Serial Number (if available): | 10. Control Device (if any): |
| NA | NA | NA |

**FUEL DESCRIPTION AND SPECIFICATIONS**

| 11. Fuel Type | ☐ Diesel Fuel (# ) (gal/hr) | ☐ Gasoline Fuel (gal/hr) | ☐ Natural Gas (cf/hr) | ☒ Other Fuels (unit:cf/hr) |
|---|---|---|---|---|
| 12. Full Load Consumption Rate | | | | 25,000 |
| 13. Actual Consumption Rate | | | | 18,643 |
| 14. Sulfur Content wt% | | N/A | N/A | N/A |

**OPERATING LIMITS & SCHEDULE**

15. Imposed Operating Limits (hours/year, or gallons fuel/year, etc.):

6.9 lb/hr SO2 from all combustion equipment, based on measured biogas H2S concentration and biogas flow rate

16. Operating Schedule (hours/day, months/year, etc.):

24 hours a day, 365 days a year

Emissions Units - Industrial Engine Information **Form EU1**

**DEQ AIR QUALITY PROGRAM**
1410 N. Hilton, Boise, ID 83706
For assistance, call the
**Air Permit Hotline – 1-877-5PERMIT**

# PERMIT TO CONSTRUCT APPLICATION

Revision 3
03/27/07

*Please see instructions on page 2 before filling out the form.*

| IDENTIFICATION | | |
|---|---|---|
| Company Name: | Facility Name: | Facility ID No: |
| New Energy One, LLC | New Energy One Biogas Project | 001-00235 |
| Brief Project Description: | Replace three small CAT 3412 gensets with one large CAT | |

**EXEMPTION**

**Please refer to IDAPA 58.01.01.222.01.c and d for a list of internal combustion engines that are exempt from the Permit to Construct requirements.**

**ENGINE (EMISSION UNIT) DESCRIPTION AND SPECIFICATIONS**

1. Type of Unit: ☐ New Unit ☐ Unpermitted Existing Unit ☒ Modification to a Unit with Permit #:P-2010.0076 Date Issued:

2. Use of Engine: ☐ Normal Operation ☐ Emergency ☐ Back-up ☒ Other: Renewable Energy

| 3. Engine ID Number: | 4. Rated Power: | |
|---|---|---|
| 2 | ☒ 2,233 Brake Horsepower(bhp) | ☐ Kilowatts(kW) |

| 5. Construction Date: | 6. Manufacturer: | 7. Model: |
|---|---|---|
| 2011 | Caterpillar | G3520C |
| 8. Date of Modification (if applicable): | 9. Serial Number (if available): | 10. Control Device (if any): |
| NA | NA | NA |

**FUEL DESCRIPTION AND SPECIFICATIONS**

| 11. Fuel Type | ☐ Diesel Fuel (# ) (gal/hr) | ☐ Gasoline Fuel (gal/hr) | ☐ Natural Gas (cf/hr) | ☒ Other Fuels (unit:cf/hr) |
|---|---|---|---|---|
| 12. Full Load Consumption Rate | | | | 25,000 |
| 13. Actual Consumption Rate | | | | 18,643 |
| 14. Sulfur Content wt% | | N/A | N/A | N/A |

**OPERATING LIMITS & SCHEDULE**

15. Imposed Operating Limits (hours/year, or gallons fuel/year, etc.):

6.9 lb/hr SO2 from all combustion equipment, based on measured biogas H2S concentration and biogas flow rate

16. Operating Schedule (hours/day, months/year, etc.):

24 hours a day, 365 days a year

**DEQ AIR QUALITY PROGRAM**
1410 N. Hilton, Boise, ID 83706
For assistance, call the
**Air Permit Hotline – 1-877-5PERMIT**

Emissions Units - Industrial Boiler Information **Form EU5**
Revision 5
08/28/08

*Please see instructions on page 2 before filling out the form.*

## IDENTIFICATION

| 1. Company Name: | 2. Facility Name: | 3 Facility ID No: |
|---|---|---|
| New Energy One, LLC | New Energy One | 001-00235 |
| 4. Brief Project Description: | Replace three small CAT 3412 gensets with one large CAT 3520 genset. | |

## EXEMPTION

**Please see IDAPA 58.01.01.222 for a list of industrial boilers that are exempt from Permit to Construct requirements.**

## BOILER (EMISSION UNIT) DESCRIPTION AND SPECIFICATIONS

5. Type of Request: ☐ New Unit ☐ Unpermitted Existing Unit ☒ Modification to a Unit with Permit #:P-2010.0076

6. Use of Boiler: ☒ % Used For Process ☐ % Used For Space Heat ☐ % Used For Generating Electricity ☐ Other:

| 7. Boiler ID Number: 3 | 8. Rated Capacity: ☐ Million British Thermal Units Per Hour (MMBtu/hr) ☒ 4.3 1,000 Pounds Steam Per Hour (1,000 lb steam/hr) | |
|---|---|---|
| 9. Construction Date: NA | 10. Manufacturer: Columbia Boilers | 11. Model: MPH-125 |
| 12. Date of Modification (if applicable): NA | 13. Serial Number (if available): NA | 14. Control Device (if any): **Note: Attach applicable control equipment form(s)** |

## FUEL DESCRIPTION AND SPECIFICATIONS

| 15. Fuel Type | ☐ Diesel Fuel (# ) (gal/hr) | ☐ Natural Gas (cf/hr) | ☐ Coal (unit: /hr) | ☒ Other Fuels (unit:cf /hr) |
|---|---|---|---|---|
| 16. Full Load Consumption Rate | | | | 9,292 |
| 17. Actual Consumption Rate | | | | 8,549 |
| 18. Fuel Heat Content (Btu/unit, LHV) | | | | 565 |
| 19. Sulfur Content wt% | | | | 0.2% |
| 20. Ash Content wt% | | N/A | | |

## STEAM DESCRIPTION AND SPECIFICATIONS

| | | | | |
|---|---|---|---|---|
| 21. Steam Heat Content | NA | NA | | |
| 22. Steam Temperature ($^{o}$F) | N/A | N/A | | 350 |
| 23. Steam Pressure (psi) | N/A | N/A | | 15 |
| 24 Steam Type | N/A | N/A | ☐ Saturated ☐ Superheated | ☒ Saturated ☐ Superheated |

## OPERATING LIMITS & SCHEDULE

| | |
|---|---|
| 25. Imposed Operating Limits (hours/year, or gallons fuel/year, etc.): | 1280 lb/week SO2 from all combustion equipment, based on measured biogas H2S concentration and biogas flow rate |
| 26. Operating Schedule (hours/day, months/year, etc.): | 8760 hrs/year |
| 27. NSPS Applicability: ☐ Yes ☒ No | If Yes, which subpart: NA |

**STATE OF IDAHO**
**DEPARTMENT OF**
**ENVIRONMENTAL QUALITY**

Version 1, August 2010

# Proposed Minor Modification to an Existing Minor Facility – Change in Potential to Emit

**Table 1 PRE-PROJECT POTENTIAL TO EMIT FOR NSR REGULATED POLLUTANTS[a]**

| Emissions Unit | PM | SO2 | NO2 | CO | VOC | Lead |
|---|---|---|---|---|---|---|
| | T/yr | T/yr | T/yr | T/yr | T/yr | T/yr |
| Point Sources | | | | | | |
| EU-1 CAT 3520 | **0.57** | **16.78** | **14.91** | **49.70** | **16.70** | **NA** |
| EU-2 CAT 3412 | **0.12** | **3.45** | **6.72** | **8.51** | **3.63** | **NA** |
| EU-3 CAT 3412 | **0.12** | **3.45** | **6.72** | **8.51** | **3.63** | **NA** |
| EU-4 CAT 3412 | **0.12** | **3.45** | **6.72** | **8.51** | **3.63** | **NA** |
| EU-5 Boiler | **0.29** | **6.24** | **2.81** | **3.15** | **0.21** | **NA** |
| EU-6 Flare* | **1.53** | **33.37** | **5.78** | **41.97** | **15.91** | **NA** |
| | | | | | | |
| Fugitive Sources | | | | | | |
| | | | | | | |
| | | | | | | |
| Totals | **1.21** | **33.37** | **37.87** | **78.37** | **27.79** | **NA** |

* Flare emissions not included in total since flare won't operate if other 5 sources operate at maximum potential to emit. Flare is only for emergency and maintenance purposes.

**Table 2 POST PROJECT POTENTIAL TO EMIT FOR NSR REGULATED POLLUTANTS[a]**

| Emissions Unit | PM | SO2 | NO2 | CO | VOC | Lead |
|---|---|---|---|---|---|---|
| | T/yr | T/yr | T/yr | T/yr | T/yr | T/yr |
| Point Sources | | | | | | |
| EU-1 CAT 3520 | **0.46** | **9.50** | **12.06** | **40.20** | **13.51** | **NA** |
| EU-2 CAT 3520 | **0.46** | **9.50** | **12.06** | **40.20** | **13.51** | **NA** |
| EU-3 Boiler | **0.28** | **4.36** | **2.81** | **3.15** | **0.21** | **NA** |
| EU-4 Flare* | **1.53** | **23.36** | **5.78** | **41.97** | **15.91** | **NA** |
| Fugitive Sources | | | | | | |
| | | | | | | |
| | | | | | | |
| Totals | **1.21** | **23.36** | **26.93** | **41.97** | **15.91** | **NA** |

* Flare emissions not included in total since flare won't operate if other 5 sources operate at maximum potential to emit. Flare is only for emergency and maintenance purposes.

**Table 3 CHANGES IN POTENTIAL TO EMIT FOR NSR REGULATED POLLUTANTS**

| Emissions Unit | PM | SO2 | NO2 | CO | VOC | Lead |
|---|---|---|---|---|---|---|
| | T/yr | T/yr | T/yr | T/yr | T/yr | T/yr |
| Point Sources | | | | | | |
| Gensets and Boiler | **0.00** | **-10.0** | **-10.9** | **5.2** | **-0.6** | **NA** |
| EU-4 Flare* | **0.00** | **-10** | **0.00** | **0.00** | **0.00** | **0.00** |
| Fugitive Sources | | | | | | |
| | | | | | | |
| | | | | | | |
| Totals | **0.00** | **-10.0** | **-10.9** | **5.2** | **-0.6** | **NA** |

* Flare emissions not included in total since flare won't operate if other 5 sources operate at maximum potential to emit. Flare is only for emergency and maintenance purposes.

**STATE OF IDAHO**
**DEPARTMENT OF**
**ENVIRONMENTAL QUALITY**

Version 1, August 2010

# Toxic Air Pollutant Emissions Inventory

**Table 1. PRE- AND POST PROJECT NON-CARCINOGENIC TAP EMISSIONS SUMMARY**
**POTENTIAL TO EMIT**

| Non-Carcinogenic Toxic Air Pollutants (sum of all emissions) | Pre-Project 24-hour Average Emissions Rates for Units at the Facility (lb/hr) | Post Project 24-hour Average Emissions Rates for Units at the Facility (lb/hr) | Change in 24-hour Average Emissions Rates for Units at the Facility (lb/hr) | Non-Carcinogenic Screening Emission Level (lb/hr) | Exceeds Screening Level? (Y/N) |
|---|---|---|---|---|---|
| Acrolein | 1.2E-01 | 1.5E-01 | 2.8E-02 | 0.017 | Y |
| Barium, soluble compounds, as Ba | 4.1E-05 | 4.1E-05 | 0.0E+00 | 0.033 | N |
| Biphenyl | 4.8E-03 | 6.0E-03 | 1.1E-03 | 0.1 | N |
| 2-Chlorophenol (and all isomers) (ID) | 5.0E-07 | 6.1E-07 | 1.1E-07 | 0.033 | N |
| Chromium metal - Including: | 1.3E-05 | 1.3E-05 | 0.0E+00 | 0.033 | N |
| Cobalt metal, dust, and fume | 7.8E-07 | 7.8E-07 | 0.0E+00 | 0.0033 | N |
| Copper - Dusts & mists, as Cu | 7.9E-06 | 7.9E-06 | 0.0E+00 | 0.067 | N |
| Cresols/Cresylic Acid (isomers and mixtures) | 3.0E-05 | 3.6E-05 | 6.3E-06 | 1.47 | N |
| Cyclopentane | 5.2E-03 | 6.4E-03 | 1.2E-03 | 114.667 | N |
| Dibutyl phthalate | 9.8E-07 | 1.2E-06 | 2.1E-07 | 0.333 | N |
| Ethyl benzene | 9.2E-04 | 1.1E-03 | 2.2E-04 | 29 | N |
| Manganese as Mn Dust & compounds | 3.5E-06 | 3.5E-06 | 0.0E+00 | 0.333 | N |
| Mercury (vapors except Alkyl as Hg) | 2.4E-06 | 2.4E-06 | 0.0E+00 | 0.003 | N |
| Molybdenum as Mo - Soluble compounds | 1.0E-05 | 1.0E-05 | 0.0E+00 | 0.333 | N |
| Methanol | 5.7E-02 | 7.1E-02 | 1.4E-02 | 17.3 | N |
| Hexane (n-Hexane) | 2.5E-02 | 3.1E-02 | 6.0E-03 | 12 | N |
| Hydrogen sulfide | 1.1E-01 | 9.5E-02 | -1.7E-02 | 0.933 | N |
| o-Methylcyclohexanone | 2.8E-02 | 3.5E-02 | 6.7E-03 | 15.3 | N |
| Naphthalene | 1.7E-03 | 2.1E-03 | 4.0E-04 | 3.33 | N |
| Nitrobenzene | 2.3E-07 | 2.8E-07 | 5.0E-08 | 0.333 | N |
| Nonane | 2.5E-03 | 3.1E-03 | 6.0E-04 | 70 | N |
| Octane | 8.0E-03 | 9.9E-03 | 1.9E-03 | 93.3 | N |
| Pentane | 8.4E-02 | 9.8E-02 | 1.4E-02 | 118 | N |
| Phenol | 5.6E-04 | 6.9E-04 | 1.3E-04 | 1.27 | N |
| Pyridine | 3.9E-07 | 4.8E-07 | 8.3E-08 | 1 | N |

| | | | | | |
|---|---|---|---|---|---|
| Selenium | 2.2E-07 | 2.2E-07 | 0.0E+00 | 0.013 | N |
| Styrene monomer (ID) | 4.4E-07 | 5.4E-07 | 9.4E-08 | 6.67 | N |
| Toluene (toluol) | 9.4E-03 | 1.2E-02 | 2.2E-03 | 25 | N |
| Trimethyl benzene (mixed and individual isomers) | 1.6E-03 | 2.0E-03 | 3.8E-04 | 8.2 | N |
| 2,2,4-Trimethyl-pentane | 5.7E-03 | 7.1E-03 | 1.4E-03 | 23.3 | N |
| Xylene (o-, m-, p-isomers) | 4.2E-03 | 5.2E-03 | 1.0E-03 | 29 | N |

**Table 2. PRE- AND POST PROJECT CARCINOGENIC TAP EMISSIONS SUMMARY POTENTIAL TO EMIT**

| Carcinogenic Toxic Air Pollutants (sum of all emissions) | Pre-Project Annual Average Emissions Rates for Units at the Facility (lb/hr) | Post Project Annual Average Emissions Rates for Units at the Facility (lb/hr) | Change in Annual Average Emissions Rates for Units at the Facility (lb/hr) | Carcinogenic Screening Emission Level (lb/hr) | Exceeds Screening Level? (Y/N) |
|---|---|---|---|---|---|
| Aniline | 7.3E-06 | 7.3E-06 | 0.0 | 9.0E-04 | N |
| Arsenic compounds | 1.7E-06 | 1.7E-06 | 0.0 | 1.5E-06 | N |
| Benzene | 9.3E-03 | 9.3E-03 | 0.0 | 8.0E-04 | N |
| Bis (2-chloro-1-methyl- ethyl) ether | 1.8E-06 | 1.8E-06 | 0.0 | 3.3E-04 | N |
| Bis (2-ethylhexyl) phthalate | 4.6E-06 | 4.6E-06 | 0.0 | 2.8E-02 | N |
| Cadmium and compounds | 9.4E-06 | 9.4E-06 | 0.0 | 3.7E-06 | N |
| Carbon tetrachloride | 1.0E-06 | 1.0E-06 | 0.0 | 4.4E-04 | N |
| Formaldehyde | 6.4E-04 | 6.4E-04 | 0.0 | 5.1E-04 | N |
| Nickel | 1.8E-05 | 1.8E-05 | 0.0 | 2.7E-05 | N |
| Dichloromethane (Methylenechloride) | 4.2E-04 | 4.2E-04 | 0.0 | 1.6E-03 | N |
| 1,1,2,2,Tetrachloro-ethane | 5.2E-05 | 5.2E-05 | 0.0 | 1.1E-05 | N |
| Tetrachloroethylene | 8.3E-07 | 8.3E-07 | 0.0 | 1.3E-02 | N |
| 1,1,2 - trichloroethane | 2.0E-05 | 2.0E-05 | 0.0 | 4.2E-04 | N |
| Vinyl Chloride | 3.1E-04 | 3.1E-04 | 0.0 | 1.2E-03 | N |

**STATE OF IDAHO**
**DEPARTMENT OF**
**ENVIRONMENTAL QUALITY**

Version 1, August 2010

# Facility Wide Hazardous Air Pollutant Potential to Emit

**Table 1 HAP POTENTIAL TO EMIT EMISSIONS SUMMARY**

| HAP Pollutants | PTE (T/yr) | |
|---|---|---|
| Acrolein | 4.7E-01 | Maximum Individual HAP |
| Biphenyl | 2.0E-02 | |
| Chromium metal - Including: | 5.2E-05 | |
| Cobalt metal, dust, and fume | 3.1E-06 | |
| Cresols/Cresylic Acid (isomers and mixtures) | 1.2E-04 | |
| Dibutyl phthalate | 4.0E-06 | |
| Ethyl benzene | 3.7E-03 | |
| Manganese as Mn Dust & compounds | 1.4E-05 | |
| Mercury (vapors except Alkyl as Hg) | 9.7E-06 | |
| Methanol | 2.3E-01 | |
| Hexane (n-Hexane) | 1.0E-01 | |
| Naphthalene | 6.9E-03 | |
| Nitrobenzene | 9.4E-07 | |
| Phenol | 2.3E-03 | |
| Selenium | 9.0E-07 | |
| Styrene monomer (ID) | 1.8E-06 | |
| Toluene (toluol) | 3.8E-02 | |
| 2,2,4-Trimethyl-pentane | 2.3E-02 | |
| Xylene (o-, m-, p-isomers) | 1.7E-02 | |
| Aniline | 3.2E-05 | |
| Arsenic compounds | 7.5E-06 | |
| Benzene | 4.1E-02 | |
| Bis (2-chloro-1-methyl- ethyl) ether | 7.7E-06 | |
| Bis (2-ethylhexyl) phthalate | 2.0E-05 | |
| Cadmium and compounds | 4.1E-05 | |
| Carbon tetrachloride | 4.4E-06 | |
| Formaldehyde | 2.8E-03 | |
| Nickel | 7.9E-05 | |
| Dichloromethane (Methylenechloride) | 1.8E-03 | |
| 1,1,2,2,Tetrachloro-ethane | 2.3E-04 | |
| Tetrachloroethylene | 3.6E-06 | |
| 1,1,2 - trichloroethane | 8.9E-05 | |
| Vinyl Chloride | 1.4E-03 | |
| **Total:** | **9.7E-01** | |

**STATE OF IDAHO**
**DEPARTMENT OF**
**ENVIRONMENTAL QUALITY**

Version 2, January 2011

# Ambient Impact Assessment Emission Inventory for New Minor Facilities and Minor Modifications

**Table 1** **Actual Emissions**

| Emissions Unit | Stack or Emissions Point ID[a] | $PM_{10}$ | $PM_{2.5}$ | | $SO_2$ | | $NO_x$ | | CO | | Lead | |
|---|---|---|---|---|---|---|---|---|---|---|---|---|
| | | lb/hr 24-hr Avg. | lb/hr 24-hr Avg. | lb/hr Annual Avg. | lb/hr Max. | lb/hr 3-hr Avg. | lb/hr Max. | lb/hr Annual Avg. | lb/hr Max. | lb/hr 8-hr Avg. | lb/hr monthly Avg. | lb/hr 1/4ly Avg. |
| **Point Sources** | | | | | | | | | | | | |
| **CAT 3520** | EU-1 | 0.0 | 0.0 | 0.0 | 2.91 | 0.0 | 3.69 | 0.0 | 0.0 | 0.0 | 0.0 | 0.0 |
| **CAT 3520** | EU-2 | 0.0 | 0.0 | 0.0 | 2.91 | 0.0 | 3.69 | 0.0 | 0.0 | 0.0 | 0.0 | 0.0 |
| **Boiler** | EU-3 | 0.0 | 0.0 | 0.0 | 1.08 | 0.0 | 2.81 | 0.0 | 0.0 | 0.0 | 0.0 | 0.0 |
| **Fugitive Sources** | | | | | | | | | | | | |
| **XXX** | F01 | 0.0 | 0.0 | 0.0 | 0.0 | 0.0 | 0.0 | 0.0 | 0.0 | 0.0 | 0.0 | 0.0 |
| **XXX** | F02 | 0.0 | 0.0 | 0.0 | 0.0 | 0.0 | 0.0 | 0.0 | 0.0 | 0.0 | 0.0 | 0.0 |
| **XXX** | F03 | 0.0 | 0.0 | 0.0 | 0.0 | 0.0 | 0.0 | 0.0 | 0.0 | 0.0 | 0.0 | 0.0 |

a) Stack or Emissions Point ID must match the ID used in the air dispersion model.

| | | |
|---|---|---|
| | DEQ AIR QUALITY PROGRAM<br>1410 N. Hilton, Boise, ID 83706<br>For assistance, call the<br>**Air Permit Hotline - 1-877-5PERMIT** | **PERMIT TO CONSTRUCT APPLICATION**<br>Revision 3<br>4/5/2007 |

*Please see instructions on page 2 before filling out the form.*

| | |
|---|---|
| Company Name: | New Energy One, LLC |
| Facility Name: | New Energy One biogas project |
| Facility ID No.: | 00-00235 |
| Brief Project Description: | Replace three small CAT 3412 gensets with one large CAT 3520 genset |

**SUMMARY OF AIR IMPACT ANALYSIS RESULTS - CRITERIA POLLUTANTS**

| | | 1. | | 2. | 3. | 4. | | 5. |
|---|---|---|---|---|---|---|---|---|
| **Criteria Pollutants** | **Averaging Period** | **Significant Impact Analysis Results (µg/m3)** | **Significant Contribution Level (µg/m3)** | **Full Impact Analysis Results (µg/m3)** | **Background Concentration (µg/m3)** | **Total Ambient Impact (µg/m3)** | **NAAQS (µg/m3)** | **Percent of NAAQS** |
| $PM_{10}$ | 24-hour | | 78 | | | | 150 | 0% |
| | Annual | | 27 | | | | 50 | 0% |
| $SO_2$ | 3-hr | | 644 | | | | 1,300 | 0% |
| | 24-hr | | 297 | | | | 365 | 0% |
| | Annual | | 62 | | | | 80 | 0% |
| $NO_2$ | Annual | | 26 | | | | 100 | 0% |
| CO | 1-hr | | 3,827 | | | | 40,000 | 0% |
| | 8-hr | | 2,459 | | | | 10,000 | 0% |

DEQ AIR QUALITY PROGRAM
1410 N. Hilton, Boise, ID 83706
For assistance, call the
**Air Permit Hotline - 1-877-5PERMIT**

# PERMIT TO CONSTRUCT APPLICATION

Revision 3
3/27/2007

*Please see instructions on page 2 before filling out the form.*

| | |
|---|---|
| Company Name: | New Energy One, LLC |
| Facility Name: | New Energy One biogas project |
| Facility ID No.: | 001-00235 |
| Brief Project Description: | Replace three small CAT 3412 gensets with one large CAT 3520 genset |

## POINT SOURCE STACK PARAMETERS

| 1. | 2. | 3a. | 3b. | 4. | 5. | 6. | 7. | 8. | 9. | 10. |
|---|---|---|---|---|---|---|---|---|---|---|
| **Emissions units** | **Stack ID** | **UTM Easting (m)** | **UTM Northing (m)** | **Base Elevation (m)** | **Stack Height (m)** | **Modeled Diameter (m)** | **Stack Exit Temperature (K)** | **Stack Exit Flowrate (acfm)** | **Stack Exit Velocity (m/s)** | **Stack orientation (e.g., horizontal, rain cap)** |
| **Point Source(s)** | | | | | | | | | | |
| CAT 3520 | EU-1 | 695,958.59 | 4,708,135.74 | 1,262 | 9.14 | 0.36 | 450 | 7,440 | 35.37 | vertical |
| CAT 3520 | EU-2 | 695,951.07 | 4,708,136.39 | 1,262 | 9.16 | 0.36 | 450 | 7,440 | 35.37 | vertical |
| Boiler | EU-4 | 695,937.74 | 4,708,135.74 | 1,262 | 9.14 | 0.36 | 450 | 1,677 | 7.97 | vertical |
| Flare | EU-5 | 695,967.96 | 4,708,135.48 | 1,261 | 13.79 | 0.61 | 1273 | 9,047 | 14.63 | vertical |
| | | | | | (effective release height) | | | | | |
| | | | | | | | | | | |
| | | | | | | | | | | |
| | | | | | | | | | | |
| | | | | | | | | | | |
| | | | | | | | | | | |
| | | | | | | | | | | |
| | | | | | | | | | | |
| | | | | | | | | | | |
| | | | | | | | | | | |
| | | | | | | | | | | |
| **(insert more rows as needed)** | | | | | | | | | | |

| | | |
|---|---|---|
| | DEQ AIR QUALITY PROGRAM<br>1410 N. Hilton, Boise, ID 83706<br>For assistance, call the<br>**Air Permit Hotline - 1-877-5PERMIT** | **PERMIT TO CONSTRUCT APPLICATION**<br>Revision 3<br>4/5/2007 |

*Please see instructions on page 2 before filling out the form.*

| | |
|---|---|
| Company Name: | New Energy One, LLC |
| Facility Name: | New Energy One biogas project |
| Facility ID No.: | 1 |
| Brief Project Description: | Anaerobic digestion of manure waste generates biogas to produce electricity. |

**FUGITIVE SOURCE PARAMETERS**

| 1. | 2. | 3a. | 3b. | 4. | 5. | 6. | 7. | 8. | 9. | 10. |
|---|---|---|---|---|---|---|---|---|---|---|
| **Emissions units** | **Stack ID** | **UTM Easting (m)** | **UTM Northing (m)** | **Base Elevation (m)** | **Release Height (m)** | **Easterly Length (m)** | **Northerly Length (m)** | **Angle from North ( °)** | **Initial Vertical Dimension (m)** | **Initial Horizontal Dimension (m)** |
| **Area Source(s)** | | | | | | | | | | |
| name of the emissions unit1 | | | | | | | | | | |
| name of the emissions unit2 | | | | | | | | | | |
| name of the emissions unit3 | | | | | | | | | | |
| name of the emissions unit4 | | | | | | | | | | |
| name of the emissions unit5 | | | | | | | | | | |
| name of the emissions unit6 | | | | | | | | | | |
| name of the emissions unit7 | | | | | | | | | | |
| name of the emissions unit8 | | | | | | | | | | |
| name of the emissions unit9 | | | | | | | | | | |
| name of the emissions unit10 | | | | | | | | | | |
| **Volume Source(s)** | | | | | | | | | | |
| name of the emissions unit11 | | | | | | | | | | |
| name of the emissions unit12 | | | | | | | | | | |
| name of the emissions unit13 | | | | | | | | | | |
| name of the emissions unit14 | | | | | | | | | | |
| name of the emissions unit15 | | | | | | | | | | |
| name of the emissions unit16 | | | | | | | | | | |
| name of the emissions unit17 | | | | | | | | | | |
| name of the emissions unit18 | | | | | | | | | | |
| name of the emissions unit19 | | | | | | | | | | |
| **(insert more rows as needed)** | | | | | | | | | | |

DEQ AIR QUALITY PROGRAM
1410 N. Hilton, Boise, ID 83706
For assistance, call the
**Air Permit Hotline - 1-877-5PERMIT**

# PERMIT TO CONSTRUCT APPLICATION

Revision 3
4/5/2007

*Please see instructions on page 2 before filling out the form.*

| | |
|---|---|
| Company Name: | New Energy One, LLC |
| Facility Name: | New Energy One biogas project |
| Facility ID No.: | 1 |
| Brief Project Description: | Anaerobic digestion of manure waste generates biogas to produce electricity. |

## BUILDING AND STRUCTURE INFORMATION

| 1. | 2. | 3. | 4. | 5. | 6. | 7. |
|---|---|---|---|---|---|---|
| **Building ID Number** | **Length (ft)** | **Width (ft)** | **Base Elevation (m)** | **Building Height (m)** | **Number of Tiers** | **Description/Comments** |
| Generator Building | 120.00 | 60.00 | 1261.72 | 8.23 | 1 | Generator building nearest the stacks |
| Support#1 | 79.00 | 30.00 | 1261.11 | 8.23 | 1 | |
| Support Building #2 | 140.00 | 60.00 | 1261.11 | 8.23 | 1 | |
| Digester Tanks (x 6) | | 85.00 | 1262.33 | 9.60 | 1 | |
| | | | | | | |
| **(insert more rows as needed)** | | | | | | |

**DEQ AIR QUALITY PROGRAM**
1410 N. Hilton, Boise, ID 83706
For assistance, call the
**Air Permit Hotline – 1-877-5PERMIT**

# AIR PERMIT APPLICATION

Revision 5
09/08/08

For each box in the table below, CTRL+click on the blue underlined text for instructions and information.

| IDENTIFICATION | | |
|---|---|---|
| 1. Company Name: | 2. Facility Name: | 3. Facility ID No.: |
| **New Energy One, LLC** | **New Energy One Biogas Project** | **001-00235** |
| 4. Brief Project Description: | Replace three small CAT 3412 gensets with one large CAT 3520 genset | |

| APPLICABILITY DETERMINATION | |
|---|---|
| 5. Review current federal regulations and identify federal regulations that apply or appear to apply to the facility. You will list applicable regulations below in items 6-8. | ☐ The facility is not subject to any federal regulations. If you checked this box, the form is now complete.<br><br>X **Federal regulation(s) applies. Continue with item 6.** |
| 6. List applicable subpart(s) of the New Source Performance Standards (NSPS) (40 CFR part 60). | List of applicable subpart(s):<br>**40 CFR 60 subpart JJJJ**<br><br>☐ Not applicable. |
| 7. List applicable subpart(s) of the National Emission Standards for Hazardous Air Pollutants for Source Categories (NESHAP), also called Maximum Achievable Control Technology (MACT), found in 40 CFR part 63. | List of applicable subpart(s):<br><br>**X Not applicable**. |
| 8. List applicable subpart(s) of the National Emission Standards for Hazardous Air Pollutants (NESHAP) found in 40 CFR part 61. | List of applicable subpart(s):<br><br>**X Not applicable**. |
| 9. For each subpart identified above, conduct a complete regulatory analysis. | **X Regulatory analysis complete.**<br><br>☐ Not applicable. Explain why: |
| 10. Will this facility be subject to compliance assurance monitoring (CAM) (40 CFR 64) as a result of this permitting action? | ☒ **NO, the facility is not subject to CAM at the time of this permitting action. Please explain why:**<br><br>☐ YES If yes, please fill out DEQ Form CAM.<br><br>**X Not applicable.** |
| 11. List applicable part(s) and subpart(s) of other federal regulations that are not included in items 7 through 9, and conduct a complete regulatory analysis. | List of all applicable part(s) and subpart(s):<br><br>**X Not applicable.** |

**IF YOU ARE UNSURE HOW TO ANSWER ANY OF THESE QUESTIONS, CALL THE AIR PERMIT HOTLINE AT 1-877-5PERMIT**

**Note:** The following applicability review utilizes colored highlighting to denote applicable and non-applicable portions of Subpart JJJJ as it relates to the proposed Rock Creek Biogas Project.

**Subpart JJJJ—Standards of Performance for Stationary Spark Ignition Internal Combustion Engines**
**Source:** 73 FR 3591, Jan. 18, 2008, unless otherwise noted.
**What This Subpart Covers**
**§ 60.4230 Am I subject to this subpart?**
(a) The provisions of this subpart are applicable to manufacturers, owners, and operators of stationary spark ignition (SI) internal combustion engines (ICE) as specified in paragraphs (a)(1) through (5) of this section. For the purposes of this subpart, the date that construction commences is the date the engine is ordered by the owner or operator.
(1) Manufacturers of stationary SI ICE with a maximum engine power less than or equal to 19 kilowatt (KW) (25 horsepower (HP)) that are manufactured on or after July 1, 2008.
(2) Manufacturers of stationary SI ICE with a maximum engine power greater than 19 KW (25 HP) that are gasoline fueled or that are rich burn engines fueled by liquefied petroleum gas (LPG), where the date of manufacture is:
(i) On or after July 1, 2008; or
(ii) On or after January 1, 2009, for emergency engines.
(3) Manufacturers of stationary SI ICE with a maximum engine power greater than 19 KW (25 HP) that are not gasoline fueled and are not rich burn engines fueled by LPG, where the manufacturer participates in the voluntary manufacturer certification program described in this subpart and where the date of manufacture is:
(i) On or after July 1, 2007, for engines with a maximum engine power greater than or equal to 500 HP (except lean burn engines with a maximum engine power greater than or equal to 500 HP and less than 1,350 HP);
(ii) On or after January 1, 2008, for lean burn engines with a maximum engine power greater than or equal to 500 HP and less than 1,350 HP;
(iii) On or after July 1, 2008, for engines with a maximum engine power less than 500 HP; or
(iv) On or after January 1, 2009, for emergency engines.

→ Not applicable, applies to engine manufacturer, not owner/operator.

(4) Owners and operators of stationary SI ICE that commence construction after June 12, 2006, where the stationary SI ICE are manufactured:
(i) On or after July 1, 2007, for engines with a maximum engine power greater than or equal to 500 HP (except lean burn engines with a maximum engine power greater than or equal to 500 HP and less than 1,350 HP);

→ Applicable since the second CAT 3520 engine (2233 HP) will be ordered in 2011 it is expected the engine will be constructed in 2011.

(ii) on or after January 1, 2008, for lean burn engines with a maximum engine power greater than or equal to 500 HP and less than 1,350 HP;

→ Not applicable to CAT 3520 engine (2233 HP.

(iii) on or after July 1, 2008, for engines with a maximum engine power less than 500 HP; or

→ Not applicable since all proposed engines have power rating greater than 500 HP.

(iv) on or after January 1, 2009, for emergency engines with a maximum engine power greater than 19 KW (25 HP).

→ Not applicable since all proposed engines are not considered to be “emergency engines”.

(5) Owners and operators of stationary SI ICE that commence modification or reconstruction after June 12, 2006.

→ Not applicable since no engine modification or reconstruction is proposed.

(b) The provisions of this subpart are not applicable to stationary SI ICE being tested at an engine test cell/stand.

→ Not applicable since none of the engines are stationary SI ICE being tested at an engine test cell/stand.

(c) If you are an owner or operator of an area source subject to this subpart, you are exempt from the obligation to obtain a permit under 40 CFR part 70 or 40 CFR part 71, provided you are not required to obtain a permit under 40 CFR 70.3(a) or 40 CFR 71.3(a) for a reason other than your status as an area source under this subpart. Notwithstanding the previous sentence, you must continue to comply with the provisions of this subpart as applicable.

→ The proposed project is an area source that is required to obtain a Permit to Construct under the State Program administered by the State of Idaho as a minor source.

(d) For the purposes of this subpart, stationary SI ICE using alcohol-based fuels are considered gasoline engines.

→ Not applicable, none of the proposed engines will combust alcohol based fuels.

(e) Stationary SI ICE may be eligible for exemption from the requirements of this subpart as described in 40 CFR part 1068, subpart C (or the exemptions described in 40 CFR parts 90 and 1048, for engines that would need to be certified to standards in those parts), except that owners and operators, as well as manufacturers, may be eligible to request an exemption for national security.

→ Not applicable, no exemption is requested.

(f) Owners and operators of facilities with internal combustion engines that are acting as temporary replacement units and that are located at a stationary source for less than 1 year and that have been properly certified as meeting the standards that would be applicable to such engine under the appropriate nonroad engine provisions, are not required to meet any other provisions under this subpart with regard to such engines.

→ Not applicable the engines are not temporary replacement units.

**Emission Standards for Manufacturers**
**§ 60.4231 What emission standards must I meet if I am a manufacturer of stationary SI internal combustion engines or equipment containing such engines?**
(a) Stationary SI internal combustion engine manufacturers must certify their stationary SI ICE with a maximum engine power less than or equal to 19 KW (25 HP) manufactured on or after July 1, 2008 to the certification emission standards and other requirements for new nonroad SI engines in 40 CFR part 90 or 1054, as follows:

| **If engine replacement is . . .** | **and manufacturing dates are . . .** | **the engine must meet emission standards and related requirements for nonhandheld engines under . . .** |
|---|---|---|
| (1) below 225 cc | July 1, 2008 to December 31, 2011 | 40 CFR part 90. |
| (2) below 225 cc | January 1, 2012 or later | 40 CFR part 1054. |
| (3) at or above 225 cc | July 1, 2008 to December 31, 2010 | 40 CFR part 90. |
| (4) at or above 225 cc | January 1, 2011 or later | 40 CFR part 1054. |

(b) Stationary SI internal combustion engine manufacturers must certify their stationary SI ICE with a maximum engine power greater than 19 KW (25 HP) (except emergency stationary ICE with a maximum engine power greater than 25 HP and less than 130 HP) that use gasoline

and that are manufactured on or after the applicable date in §60.4230(a)(2), or manufactured on or after the applicable date in §60.4230(a)(4) for emergency stationary ICE with a maximum engine power greater than or equal to 130 HP, to the certification emission standards and other requirements for new nonroad SI engines in 40 CFR part 1048. Stationary SI internal combustion engine manufacturers must certify their emergency stationary SI ICE with a maximum engine power greater than 25 HP and less than 130 HP that are manufactured on or after the applicable date in §60.4230(a)(4) to the Phase 1 emission standards in 40 CFR 90.103, applicable to class II engines, and other requirements for new nonroad SI engines in 40 CFR part 90. Stationary SI internal combustion engine manufacturers may certify their stationary SI ICE with a maximum engine power less than or equal to 30 KW (40 HP) with a total displacement less than or equal to 1,000 cubic centimeters (cc) to the certification emission standards and other requirements for new nonroad SI engines in 40 CFR part 90 or 1054, as appropriate.

(c) Stationary SI internal combustion engine manufacturers must certify their stationary SI ICE with a maximum engine power greater than 19 KW (25 HP) (except emergency stationary ICE with a maximum engine power greater than 25 HP and less than 130 HP) that are rich burn engines that use LPG and that are manufactured on or after the applicable date in §60.4230(a)(2), or manufactured on or after the applicable date in §60.4230(a)(4) for emergency stationary ICE with a maximum engine power greater than or equal to 130 HP, to the certification emission standards and other requirements for new nonroad SI engines in 40 CFR part 1048. Stationary SI internal combustion engine manufacturers must certify their emergency stationary SI ICE with a maximum engine power greater than 25 HP and less than 130 HP that are manufactured on or after the applicable date in §60.4230(a)(4) to the Phase 1 emission standards in 40 CFR 90.103, applicable to class II engines, and other requirements for new nonroad SI engines in 40 CFR part 90. Stationary SI internal combustion engine manufacturers may certify their stationary SI ICE with a maximum engine power less than or equal to 30 KW (40 HP) with a total displacement less than or equal to 1,000 cc to the certification emission standards and other requirements for new nonroad SI engines in 40 CFR part 90 or 1054, as appropriate.

(d) Stationary SI internal combustion engine manufacturers who choose to certify their stationary SI ICE with a maximum engine power greater than 19 KW (25 HP) and less than 75 KW (100 HP) (except gasoline and rich burn engines that use LPG and emergency stationary ICE with a maximum engine power greater than 25 HP and less than 130 HP) under the voluntary manufacturer certification program described in this subpart must certify those engines to the certification emission standards for new nonroad SI engines in 40 CFR part 1048. Stationary SI internal combustion engine manufacturers who choose to certify their emergency stationary SI ICE greater than 25 HP and less than 130 HP, must certify those engines to the Phase 1 emission standards in 40 CFR 90.103, applicable to class II engines, for new nonroad SI engines in 40 CFR part 90. Stationary SI internal combustion engine manufacturers may certify their stationary SI ICE with a maximum engine power less than or equal to 30 KW (40 HP) with a total displacement less than or equal to 1,000 cc to the certification emission standards for new nonroad SI engines in 40 CFR part 90 or 1054, as appropriate. For stationary SI ICE with a maximum engine power greater than 19 KW (25 HP) and less than 75 KW (100 HP) (except gasoline and rich burn engines that use LPG and emergency stationary ICE with a maximum engine power greater than 25 HP and less than 130 HP) manufactured prior to January 1, 2011, manufacturers may choose to certify these engines to the standards in Table 1 to this subpart applicable to engines with a maximum engine power greater than or equal to 100 HP and less than 500 HP.

(e) Stationary SI internal combustion engine manufacturers who choose to certify their stationary SI ICE with a maximum engine power greater than or equal to 75 KW (100 HP) (except gasoline and rich burn engines that use LPG) under the voluntary manufacturer certification program described in this subpart must certify those engines to the emission standards in Table 1 to this subpart. Stationary SI internal combustion engine manufacturers may certify their stationary SI ICE with a maximum engine power greater than or equal to 75 KW (100 HP) that are lean burn engines that use LPG to the certification emission standards for new nonroad SI engines in 40 CFR part 1048. For stationary SI ICE with a maximum engine power greater than or equal to 100 HP (75 KW) and less than 500 HP (373 KW) manufactured prior to January 1, 2011, and for stationary SI ICE with a maximum engine power greater than or equal to 500 HP (373 KW) manufactured prior to July 1, 2010, manufacturers may choose to certify these engines to the certification emission standards for new nonroad SI engines in 40 CFR part 1048 applicable to engines that are not severe duty engines.

(f) Manufacturers of equipment containing stationary SI internal combustion engines meeting the provisions of 40 CFR part 1054 must meet the provisions of 40 CFR part 1060, to the extent they apply to equipment manufacturers.
[73 FR 3591, Jan. 18, 2008, as amended by 73 FR 59175, Oct. 8, 2008]

**§ 60.4232 How long must my engines meet the emission standards if I am a manufacturer of stationary SI internal combustion engines?**

Engines manufactured by stationary SI internal combustion engine manufacturers must meet the emission standards as required in §60.4231 during the certified emissions life of the engines.

→ Not applicable, these requirements apply to manufacturer, not operator.

**Emission Standards for Owners and Operators**

**§ 60.4233 What emission standards must I meet if I am an owner or operator of a stationary SI internal combustion engine?**

(a) Owners and operators of stationary SI ICE with a maximum engine power less than or equal to 19 KW (25 HP) manufactured on or after July 1, 2008, must comply with the emission standards in §60.4231(a) for their stationary SI ICE.

→ Not applicable, maximum rated engine power exceeds 25 HP.

(b) Owners and operators of stationary SI ICE with a maximum engine power greater than 19 KW (25 HP) manufactured on or after the applicable date in §60.4230(a)(4) that use gasoline must comply with the emission standards in §60.4231(b) for their stationary SI ICE.

→ Not applicable, gasoline not to be used in the proposed engines.

(c) Owners and operators of stationary SI ICE with a maximum engine power greater than 19 KW (25 HP) manufactured on or after the applicable date in §60.4230(a)(4) that are rich burn engines that use LPG must comply with the emission standards in §60.4231(c) for their stationary SI ICE.

→ Not applicable, proposed engines are lean burn engines.

(d) Owners and operators of stationary SI ICE with a maximum engine power greater than 19 KW (25 HP) and less than 75 KW (100 HP) (except gasoline and rich burn engines that use LPG) must comply with the emission standards for field testing in 40 CFR 1048.101(c) for their non-emergency stationary SI ICE and with the emission standards in Table 1 to this subpart for their emergency stationary SI ICE. Owners and operators of stationary SI ICE with a maximum engine power greater than 19 KW (25 HP) and less than 75 KW (100 HP) manufactured prior to January 1, 2011, that were certified to the standards in Table 1 to this subpart applicable to engines with a maximum engine power greater than or equal to 100 HP and less than 500 HP, may optionally choose to meet those standards.

→ Not applicable, proposed engine rated power greater than 500 HP.

(e) Owners and operators of stationary SI ICE with a maximum engine power greater than or equal to 75 KW (100 HP) (except gasoline and rich burn engines that use LPG) must comply with the emission standards in Table 1 to this subpart for their stationary SI ICE. For owners and operators of stationary SI ICE with a maximum engine power greater than or equal to 100 HP (except gasoline and rich burn engines that use LPG) manufactured prior to January 1, 2011 that were certified to the certification emission standards in 40 CFR part 1048 applicable to engines that are not severe duty engines, if such stationary SI ICE was certified to a carbon monoxide (CO) standard above the standard in Table 1 to this subpart, then the owners and operators may meet the CO certification (not field testing) standard for which the engine was certified.

→ This is applicable. See Table 1 for applicable standards.

(f) Owners and operators of any modified or reconstructed stationary SI ICE subject to this subpart must meet the requirements as specified in paragraphs (f)(1) through (5) of this section.

(1) Owners and operators of stationary SI ICE with a maximum engine power less than or equal to 19 KW (25 HP), that are modified or reconstructed after June 12, 2006, must comply with the same emission standards as those specified in paragraph (a) of this section.
(2) Owners and operators of stationary SI ICE with a maximum engine power greater than 19 KW (25 HP) that use gasoline engines, that are modified or reconstructed after June 12, 2006, must comply with the same emission standards as those specified in paragraph (b) of this section.
(3) Owners and operators of stationary SI ICE with a maximum engine power greater than 19 KW (25 HP) that are rich burn engines that use LPG, that are modified or reconstructed after June 12, 2006, must comply with the same emission standards as those specified in paragraph (c) of this section.
(4) Owners and operators of stationary SI natural gas and lean burn LPG engines with a maximum engine power greater than 19 KW (25 HP), that are modified or reconstructed after June 12, 2006, must comply with the same emission standards as those specified in paragraph (d) or (e) of this section, except that such owners and operators of non-emergency engines and emergency engines greater than or equal to 130 HP must meet a nitrogen oxides ($NO_x$) emission standard of 3.0 grams per HP-hour (g/HP-hr), a CO emission standard of 4.0 g/HP-hr (5.0 g/HP-hr for non-emergency engines less than 100 HP), and a volatile organic compounds (VOC) emission standard of 1.0 g/HP-hr, or a $NO_x$ emission standard of 250 ppmvd at 15 percent oxygen ($O_2$), a CO emission standard 540 ppmvd at 15 percent $O_2$ (675 ppmvd at 15 percent $O_2$ for non-emergency engines less than 100 HP), and a VOC emission standard of 86 ppmvd at 15 percent $O_2$, where the date of manufacture of the engine is:
(i) Prior to July 1, 2007, for non-emergency engines with a maximum engine power greater than or equal to 500 HP;
(ii) Prior to July 1, 2008, for non-emergency engines with a maximum engine power less than 500 HP;
(iii) Prior to January 1, 2009, for emergency engines.
(5) Owners and operators of stationary SI landfill/digester gas ICE engines with a maximum engine power greater than 19 KW (25 HP), that are modified or reconstructed after June 12, 2006, must comply with the same emission standards as those specified in paragraph (e) of this section for stationary landfill/digester gas engines.

→ Not applicable, proposed sources not modified or reconstructed.

(g) Owners and operators of stationary SI wellhead gas ICE engines may petition the Administrator for approval on a case-by-case basis to meet emission standards no less stringent than the emission standards that apply to stationary emergency SI engines greater than 25 HP and less than 130 HP due to the presence of high sulfur levels in the fuel, as specified in Table 1 to this subpart. The request must, at a minimum, demonstrate that the fuel has high sulfur levels that prevent the use of aftertreatment controls and also that the owner has reasonably made all attempts possible to obtain an engine that will meet the standards without the use of aftertreatment controls. The petition must request the most stringent standards reasonably applicable to the engine using the fuel.

→ Not applicable, the owner or operator is not petitioning the Administrator for less stringent emission standards.

(h) Owners and operators of stationary SI ICE that are required to meet standards that reference 40 CFR 1048.101 must, if testing their engines in use, meet the standards in that section applicable to field testing, except as indicated in paragraph (e) of this section.

→ Not applicable, stationary engines are not classified as nonroad engines; therefore 40 CFR 1048.101 does not apply.

**§ 60.4234 How long must I meet the emission standards if I am an owner or operator of a stationary SI internal combustion engine?**
Owners and operators of stationary SI ICE must operate and maintain stationary SI ICE that achieve the emission standards as required in §60.4233 over the entire life of the engine.

→ Applicable, the proposed engines are subject to the applicable emission standards over the entire life of the engines.

**Other Requirements for Owners and Operators**

**§ 60.4235 What fuel requirements must I meet if I am an owner or operator of a stationary SI gasoline fired internal combustion engine subject to this subpart?**

Owners and operators of stationary SI ICE subject to this subpart that use gasoline must use gasoline that meets the per gallon sulfur limit in 40 CFR 80.195.

→ Not applicable, not gasoline fired engines.

**§ 60.4236 What is the deadline for importing or installing stationary SI ICE produced in the previous model year?**

(a) After July 1, 2010, owners and operators may not install stationary SI ICE with a maximum engine power of less than 500 HP that do not meet the applicable requirements in §60.4233.

→ Not applicable, maximum rated power for each engine exceeds 500 HP.

(b) After July 1, 2009, owners and operators may not install stationary SI ICE with a maximum engine power of greater than or equal to 500 HP that do not meet the applicable requirements in §60.4233, except that lean burn engines with a maximum engine power greater than or equal to 500 HP and less than 1,350 HP that do not meet the applicable requirements in §60.4233 may not be installed after January 1, 2010.

→ Applicable. The proposed engine will be installed after January 1, 2010 and will meet the requirements of 60.4233.

(c) For emergency stationary SI ICE with a maximum engine power of greater than 19 KW (25 HP), owners and operators may not install engines that do not meet the applicable requirements in §60.4233 after January 1, 2011.

→ Not applicable, maximum rated engine power exceeds 25 HP.

(d) In addition to the requirements specified in §§60.4231 and 60.4233, it is prohibited to import stationary SI ICE less than or equal to 19 KW (25 HP), stationary rich burn LPG SI ICE, and stationary gasoline SI ICE that do not meet the applicable requirements specified in paragraphs (a), (b), and (c) of this section, after the date specified in paragraph (a), (b), and (c) of this section.

→ Not applicable, maximum rated engine power exceeds 25 HP and not rich burn LPG or gasoline engines.

(e) The requirements of this section do not apply to owners and operators of stationary SI ICE that have been modified or reconstructed, and they do not apply to engines that were removed from one existing location and reinstalled at a new location.

→ Not applicable, the proposed engines are new and have not been modified or reconstructed.

**§ 60.4237 What are the monitoring requirements if I am an owner or operator of an emergency stationary SI internal combustion engine?**

(a) Starting on July 1, 2010, if the emergency stationary SI internal combustion engine that is greater than or equal to 500 HP that was built on or after July 1, 2010, does not meet the standards applicable to non-emergency engines, the owner or operator must install a non-resettable hour meter.

(b) Starting on January 1, 2011, if the emergency stationary SI internal combustion engine that is greater than or equal to 130 HP and less than 500 HP that was built on or after January 1, 2011, does not meet the standards applicable to non-emergency engines, the owner or operator must install a non-resettable hour meter.

(c) If you are an owner or operator of an emergency stationary SI internal combustion engine that is less than 130 HP, was built on or after July 1, 2008, and does not meet the standards applicable to non-emergency engines, you must install a non-resettable hour meter upon startup of your emergency engine.

→ Not applicable, engines are not for emergency purposes.

**Compliance Requirements for Manufacturers**

**§ 60.4238 What are my compliance requirements if I am a manufacturer of stationary SI internal combustion engines •19 KW (25 HP) or a manufacturer of equipment containing such engines?**

Stationary SI internal combustion engine manufacturers who are subject to the emission standards specified in §60.4231(a) must certify their stationary SI ICE using the certification procedures required in 40 CFR part 90, subpart B, or 40 CFR part 1054, subpart C, as applicable, and must test their engines as specified in those parts. Manufacturers of equipment containing stationary SI internal combustion engines meeting the provisions of 40 CFR part 1054 must meet the provisions of 40 CFR part 1060, subpart C, to the extent they apply to equipment manufacturers.

[73 FR 59176, Oct. 8, 2008]

→ Not applicable, applies to manufacturer, not operator.

**§ 60.4239 What are my compliance requirements if I am a manufacturer of stationary SI internal combustion engines >19 KW (25 HP) that use gasoline or a manufacturer of equipment containing such engines?**

Stationary SI internal combustion engine manufacturers who are subject to the emission standards specified in §60.4231(b) must certify their stationary SI ICE using the certification procedures required in 40 CFR part 1048, subpart C, and must test their engines as specified in that part. Stationary SI internal combustion engine manufacturers who certify their stationary SI ICE with a maximum engine power less than or equal to 30 KW (40 HP) with a total displacement less than or equal to 1,000 cc to the certification emission standards and other requirements for new nonroad SI engines in 40 CFR part 90 or 40 CFR part 1054, and manufacturers of stationary SI emergency engines that are greater than 25 HP and less than 130 HP who meet the Phase 1 emission standards in 40 CFR 90.103, applicable to class II engines, must certify their stationary SI ICE using the certification procedures required in 40 CFR part 90, subpart B, or 40 CFR part 1054, subpart C, as applicable, and must test their engines as specified in those parts. Manufacturers of equipment containing stationary SI internal combustion engines meeting the provisions of 40 CFR part 1054 must meet the provisions of 40 CFR part 1060, subpart C, to the extent they apply to equipment manufacturers.

[73 FR 59176, Oct. 8, 2008]

→ Not applicable, applies to manufacturer, not operator.

**§ 60.4240 What are my compliance requirements if I am a manufacturer of stationary SI internal combustion engines >19 KW (25 HP) that are rich burn engines that use LPG or a manufacturer of equipment containing such engines?**

Stationary SI internal combustion engine manufacturers who are subject to the emission standards specified in §60.4231(c) must certify their stationary SI ICE using the certification procedures required in 40 CFR part 1048, subpart C, and must test their engines as specified in that part. Stationary SI internal combustion engine manufacturers who certify their stationary SI ICE with a maximum engine power less than or equal to 30 KW (40 HP) with a total displacement less than or equal to 1,000 cc to the certification emission standards and other requirements for new nonroad SI engines in 40 CFR part 90 or 40 CFR part 1054, and manufacturers of stationary SI emergency engines that are greater than 25 HP and less than 130 HP who meet the Phase 1 emission standards in 40 CFR 90.103, applicable to class II engines, must certify their stationary SI ICE using the certification procedures required in 40 CFR part 90, subpart B, or 40 CFR part 1054, subpart C, as applicable, and must test their engines as specified in those parts. Manufacturers of equipment containing stationary SI internal combustion engines meeting the provisions of 40 CFR part 1054 must meet the provisions of 40 CFR part 1060, subpart C, to the extent they apply to equipment manufacturers.

[73 FR 59176, Oct. 8, 2008]

→ Not applicable, applies to manufacturer, not operator.

**§ 60.4241 What are my compliance requirements if I am a manufacturer of stationary SI internal combustion engines participating in the voluntary certification program or a manufacturer of equipment containing such engines?**

(a) Manufacturers of stationary SI internal combustion engines with a maximum engine power greater than 19 KW (25 HP) that do not use gasoline and are not rich burn engines that use LPG can choose to certify their engines to the emission standards in §60.4231(d) or (e), as applicable, under the voluntary certification program described in this subpart. Manufacturers who certify their engines under the voluntary certification program must meet the requirements as specified in paragraphs (b) through (g) of this section. In addition, manufacturers of stationary SI internal combustion engines who choose to certify their engines under the voluntary certification program, must also meet the requirements as specified in §60.4247.

(b) Manufacturers of engines other than those certified to standards in 40 CFR part 90 or 40 CFR part 1054 must certify their stationary SI ICE using the certification procedures required in 40 CFR part 1048, subpart C, and must follow the same test procedures that apply to large SI nonroad engines under 40 CFR part 1048, but must use the D–1 cycle of International Organization of Standardization 8178–4: 1996(E) (incorporated by reference, see 40 CFR 60.17) or the test cycle requirements specified in Table 5 to 40 CFR 1048.505, except that Table 5 of 40 CFR 1048.505 applies to high load engines only. Stationary SI internal combustion engine manufacturers who certify their stationary SI ICE with a maximum engine power less than or equal to 30 KW (40 HP) with a total displacement less than or equal to 1,000 cc to the certification emission standards and other requirements for new nonroad SI engines in 40 CFR part 90 or 40 CFR part 1054, and manufacturers of emergency engines that are greater than 25 HP and less than 130 HP who meet the Phase 1 standards in 40 CFR 90.103, applicable to class II engines, must certify their stationary SI ICE using the certification procedures required in 40 CFR part 90, subpart B, or 40 CFR part 1054, subpart C, as applicable, and must test their engines as specified in those parts. Manufacturers of equipment containing stationary SI internal combustion engines meeting the provisions of 40 CFR part 1054 must meet the provisions of 40 CFR part 1060, subpart C, to the extent they apply to equipment manufacturers.

(c) Certification of stationary SI ICE to the emission standards specified in §60.4231(d) or (e), as applicable, is voluntary, but manufacturers who decide to certify are subject to all of the requirements indicated in this subpart with regard to the engines included in their certification. Manufacturers must clearly label their stationary SI engines as certified or non-certified engines.

(d) Manufacturers of natural gas fired stationary SI ICE who conduct voluntary certification of stationary SI ICE to the emission standards specified in §60.4231(d) or (e), as applicable, must certify their engines for operation using fuel that meets the definition of pipeline-quality natural gas. The fuel used for certifying stationary SI natural gas engines must meet the definition of pipeline-quality natural gas as described in §60.4248. In addition, the manufacturer must provide information to the owner and operator of the certified stationary SI engine including the specifications of the pipeline-quality natural gas to which the engine is certified and what adjustments the owner or operator must make to the engine when installed in the field to ensure compliance with the emission standards.

(e) Manufacturers of stationary SI ICE that are lean burn engines fueled by LPG who conduct voluntary certification of stationary SI ICE to the emission standards specified in §60.4231(d) or (e), as applicable, must certify their engines for operation using fuel that meets the specifications in 40 CFR 1065.720.

(f) Manufacturers may certify their engines for operation using gaseous fuels in addition to pipeline-quality natural gas; however, the manufacturer must specify the properties of that fuel and provide testing information showing that the engine will meet the emission standards specified in §60.4231(d) or (e), as applicable, when operating on that fuel. The manufacturer must also provide instructions for configuring the stationary engine to meet the emission standards on fuels that do not meet the pipeline-quality natural gas definition. The manufacturer must also provide information to the owner and operator of the certified stationary SI engine regarding the configuration that is most conducive to reduced emissions where the engine will be operated on gaseous fuels with different quality than the fuel that it was certified to.

(g) A stationary SI engine manufacturer may certify an engine family solely to the standards applicable to landfill/digester gas engines as specified in §60.4231(d) or (e), as applicable, but must certify their engines for operation using landfill/digester gas and must add a permanent label stating that the engine is for use only in landfill/digester gas applications. The label must be added according to the labeling requirements specified in 40 CFR 1048.135(b).

(h) For purposes of this subpart, when calculating emissions of volatile organic compounds, emissions of formaldehyde should not be included.

(i) For engines being certified to the voluntary certification standards in Table 1 of this subpart, the VOC measurement shall be made by following the procedures in 40 CFR 1065.260 and 1065.265 in order to determine the total NMHC emissions by using a flame-ionization detector and non-methane cutter. As an alternative to the nonmethane cutter, manufacturers may use a gas chromatograph as allowed under 40 CFR 1065.267 and may measure ethane, as well as methane, for excluding such levels from the total VOC measurement.
[73 FR 3591, Jan. 18, 2008, as amended by 73 FR 59176, Oct. 8, 2008]

➔ Not applicable, applies to manufacturer, not operator.

**§ 60.4242 What other requirements must I meet if I am a manufacturer of stationary SI internal combustion engines or equipment containing stationary SI internal combustion engines or a manufacturer of equipment containing such engines?**

(a) Stationary SI internal combustion engine manufacturers must meet the provisions of 40 CFR part 90, 40 CFR part 1048, or 40 CFR part 1054, as applicable, as well as 40 CFR part 1068 for engines that are certified to the emission standards in 40 CFR part 1048 or 1054, except that engines certified pursuant to the voluntary certification procedures in §60.4241 are subject only to the provisions indicated in §60.4247 and are permitted to provide instructions to owners and operators allowing for deviations from certified configurations, if such deviations are consistent with the provisions of paragraphs §60.4241(c) through (f). Manufacturers of equipment containing stationary SI internal combustion engines meeting the provisions of 40 CFR part 1054 must meet the provisions of 40 CFR part 1060, as applicable. Labels on engines certified to 40 CFR part 1048 must refer to stationary engines, rather than or in addition to nonroad engines, as appropriate.

(b) An engine manufacturer certifying an engine family or families to standards under this subpart that are identical to standards applicable under 40 CFR part 90, 40 CFR part 1048, or 40 CFR part 1054 for that model year may certify any such family that contains both nonroad and stationary engines as a single engine family and/or may include any such family containing stationary engines in the averaging, banking and trading provisions applicable for such engines under those parts. This provision also applies to equipment or component manufacturers certifying to standards under 40 CFR part 1060.

(c) Manufacturers of engine families certified to 40 CFR part 1048 may meet the labeling requirements referred to in paragraph (a) of this section for stationary SI ICE by either adding a separate label containing the information required in paragraph (a) of this section or by adding the words “and stationary” after the word “nonroad” to the label.

(d) For all engines manufactured on or after January 1, 2011, and for all engines with a maximum engine power greater than 25 HP and less than 130 HP manufactured on or after July 1, 2008, a stationary SI engine manufacturer that certifies an engine family solely to the standards applicable to emergency engines must add a permanent label stating that the engines in that family are for emergency use only. The label must be added according to the labeling requirements specified in 40 CFR 1048.135(b).

(e) All stationary SI engines subject to mandatory certification that do not meet the requirements of this subpart must be labeled according to 40 CFR 1068.230 and must be exported under the provisions of 40 CFR 1068.230. Stationary SI engines subject to standards in 40 CFR part 90 may use the provisions in 40 CFR 90.909. Manufacturers of stationary engines with a maximum engine power greater than 25 HP that are not certified to standards and other requirements under 40 CFR part 1048 are subject to the labeling provisions of 40 CFR 1048.20 pertaining to excluded stationary engines.

(f) For manufacturers of gaseous-fueled stationary engines required to meet the warranty provisions in 40 CFR 90.1103 or 1054.120, we may establish an hour-based warranty period equal to at least the certified emissions life of the engines (in engine operating hours) if we determine that these engines are likely to operate for a number of hours greater than the applicable useful life within 24 months. We will not approve an alternate warranty under this paragraph (f) for nonroad engines. An alternate warranty period approved under this paragraph (f) will be the specified number of engine operating hours or two years, whichever comes first. The engine manufacturer shall request this alternate warranty period in its application for certification or in an earlier submission. We may approve an alternate warranty period for an engine family subject to the following conditions:

(1) The engines must be equipped with non-resettable hour meters.

(2) The engines must be designed to operate for a number of hours substantially greater than the applicable certified emissions life.

(3) The emission-related warranty for the engines may not be shorter than any published warranty offered by the manufacturer without charge for the engines. Similarly, the emission-related warranty for any component shall not be shorter than any published warranty offered by the manufacturer without charge for that component.
[73 FR 3591, Jan. 18, 2008, as amended by 73 FR 59177, Oct. 8, 2008]

→ Not applicable, applies to manufacturer, not operator.

**Compliance Requirements for Owners and Operators**
**§ 60.4243 What are my compliance requirements if I am an owner or operator of a stationary SI internal combustion engine?**
(a) If you are an owner or operator of a stationary SI internal combustion engine that is manufactured after July 1, 2008, and must comply with the emission standards specified in §60.4233(a) through (c), you must comply by purchasing an engine certified to the emission standards in §60.4231(a) through (c), as applicable, for the same engine class and maximum engine power. You must also meet the requirements as specified in 40 CFR part 1068, subparts A through D, as they apply to you. If you adjust engine settings according to and consistent with the manufacturer's instructions, your stationary SI internal combustion engine will not be considered out of compliance. In addition, you must meet one of the requirements specified in (a)(1) and (2) of this section.
(1) If you operate and maintain the certified stationary SI internal combustion engine and control device according to the manufacturer's emission-related written instructions, you must keep records of conducted maintenance to demonstrate compliance, but no performance testing is required if you are an owner or operator.
(2) If you do not operate and maintain the certified stationary SI internal combustion engine and control device according to the manufacturer's emission-related written instructions, your engine will be considered a non-certified engine, and you must demonstrate compliance according to (a)(2)(i) through (iii) of this section, as appropriate.
(i) If you are an owner or operator of a stationary SI internal combustion engine less than 100 HP, you must keep a maintenance plan and records of conducted maintenance to demonstrate compliance and must, to the extent practicable, maintain and operate the engine in a manner consistent with good air pollution control practice for minimizing emissions, but no performance testing is required if you are an owner or operator.
(ii) If you are an owner or operator of a stationary SI internal combustion engine greater than or equal to 100 HP and less than or equal to 500 HP, you must keep a maintenance plan and records of conducted maintenance and must, to the extent practicable, maintain and operate the engine in a manner consistent with good air pollution control practice for minimizing emissions. In addition, you must conduct an initial performance test within 1 year of engine startup to demonstrate compliance.
(iii) If you are an owner or operator of a stationary SI internal combustion engine greater than 500 HP, you must keep a maintenance plan and records of conducted maintenance and must, to the extent practicable, maintain and operate the engine in a manner consistent with good air pollution control practice for minimizing emissions. In addition, you must conduct an initial performance test within 1 year of engine startup and conduct subsequent performance testing every 8,760 hours or 3 years, whichever comes first, thereafter to demonstrate compliance.

→ Not applicable, 60.4233 a through c do not apply. Engines are not certified.

(b) If you are an owner or operator of a stationary SI internal combustion engine and must comply with the emission standards specified in §60.4233(d) or (e), you must demonstrate compliance according to one of the methods specified in paragraphs (b)(1) and (2) of this section.
(1) Purchasing an engine certified according to procedures specified in this subpart, for the same model year and demonstrating compliance according to one of the methods specified in paragraph (a) of this section.
(2) Purchasing a non-certified engine and demonstrating compliance with the emission standards specified in §60.4233(d) or (e) and according to the requirements specified in §60.4244, as applicable, and according to paragraphs (b)(2)(i) and (ii) of this section.
(i) If you are an owner or operator of a stationary SI internal combustion engine greater than 25 HP and less than or equal to 500 HP, you must keep a maintenance plan and records of conducted maintenance and must, to the extent practicable, maintain and operate the engine in a manner consistent with good air pollution control practice for minimizing

emissions. In addition, you must conduct an initial performance test to demonstrate compliance.
(ii) If you are an owner or operator of a stationary SI internal combustion engine greater than 500 HP, you must keep a maintenance plan and records of conducted maintenance and must, to the extent practicable, maintain and operate the engine in a manner consistent with good air pollution control practice for minimizing emissions. In addition, you must conduct an initial performance test and conduct subsequent performance testing every 8,760 hours or 3 years, whichever comes first, thereafter to demonstrate compliance.

→ Applicable, engine is subject to 60.4233(e) and will demonstrate compliance through procedures described in 60.4244 in an initial performance test followed by periodic testing every 8760 hours of operation.

(c) If you are an owner or operator of a stationary SI internal combustion engine that must comply with the emission standards specified in §60.4233(f), you must demonstrate compliance according paragraph (b)(2)(i) or (ii) of this section, except that if you comply according to paragraph (b)(2)(i) of this section, you demonstrate that your non-certified engine complies with the emission standards specified in §60.4233(f).

→ Not applicable, engine power rating is greater than 19 kW; therefore not applicable.

(d) Emergency stationary ICE may be operated for the purpose of maintenance checks and readiness testing, provided that the tests are recommended by Federal, State or local government, the manufacturer, the vendor, or the insurance company associated with the engine. Maintenance checks and readiness testing of such units is limited to 100 hours per year. There is no time limit on the use of emergency stationary ICE in emergency situations. The owner or operator may petition the Administrator for approval of additional hours to be used for maintenance checks and readiness testing, but a petition is not required if the owner or operator maintains records indicating that Federal, State, or local standards require maintenance and testing of emergency ICE beyond 100 hours per year. Emergency stationary ICE may operate up to 50 hours per year in non-emergency situations, but those 50 hours are counted towards the 100 hours per year provided for maintenance and testing. The 50 hours per year for non-emergency situations cannot be used for peak shaving or to generate income for a facility to supply power to an electric grid or otherwise supply power as part of a financial arrangement with another entity. For owners and operators of emergency engines, any operation other than emergency operation, maintenance and testing, and operation in non-emergency situations for 50 hours per year, as permitted in this section, is prohibited.

→ Not applicable, engine not for emergency use.

(e) Owners and operators of stationary SI natural gas fired engines may operate their engines using propane for a maximum of 100 hours per year as an alternative fuel solely during emergency operations, but must keep records of such use. If propane is used for more than 100 hours per year in an engine that is not certified to the emission standards when using propane, the owners and operators are required to conduct a performance test to demonstrate compliance with the emission standards of §60.4233.

→ Not applicable, fueling engine with propane is not planned.

(f) If you are an owner or operator of a stationary SI internal combustion engine that is less than or equal to 500 HP and you purchase a non-certified engine or you do not operate and maintain your certified stationary SI internal combustion engine and control device according to the manufacturer's written emission-related instructions, you are required to perform initial performance testing as indicated in this section, but you are not required to conduct subsequent performance testing unless the stationary engine is rebuilt or undergoes major repair or maintenance. A rebuilt stationary SI ICE means an engine that has been rebuilt as that term is defined in 40 CFR 94.11(a).

→ Not applicable, engine power rating greater than 500 HP.

(g) It is expected that air-to-fuel ratio controllers will be used with the operation of three-way catalysts/non-selective catalytic reduction. The AFR controller must be

maintained and operated appropriately in order to ensure proper operation of the engine and control device to minimize emissions at all times.

→ Not applicable, engine is equipped with air-to-fuel ratio controller but not with three-way catalysts/non-selective catalytic reduction.

(h) If you are an owner/operator of an stationary SI internal combustion engine with maximum engine power greater than or equal to 500 HP that is manufactured after July 1, 2007 and before July 1, 2008, and must comply with the emission standards specified in sections 60.4233(b) or (c), you must comply by one of the methods specified in paragraphs (h)(1) through (h)(4) of this section.
(1) Purchasing an engine certified according to 40 CFR part 1048. The engine must be installed and configured according to the manufacturer's specifications.
(2) Keeping records of performance test results for each pollutant for a test conducted on a similar engine. The test must have been conducted using the same methods specified in this subpart and these methods must have been followed correctly.
(3) Keeping records of engine manufacturer data indicating compliance with the standards.
(4) Keeping records of control device vendor data indicating compliance with the standards.

→ Not applicable, proposed CAT 3520 engine manufactured after July 1, 2008.

**Testing Requirements for Owners and Operators**
**§ 60.4244 What test methods and other procedures must I use if I am an owner or operator of a stationary SI internal combustion engine?**
Owners and operators of stationary SI ICE who conduct performance tests must follow the procedures in paragraphs (a) through (f) of this section.
(a) Each performance test must be conducted within 10 percent of 100 percent peak (or the highest achievable) load and according to the requirements in §60.8 and under the specific conditions that are specified by Table 2 to this subpart.
(b) You may not conduct performance tests during periods of startup, shutdown, or malfunction, as specified in §60.8(c). If your stationary SI internal combustion engine is non-operational, you do not need to startup the engine solely to conduct a performance test; however, you must conduct the performance test immediately upon startup of the engine.
(c) You must conduct three separate test runs for each performance test required in this section, as specified in §60.8(f). Each test run must be conducted within 10 percent of 100 percent peak (or the highest achievable) load and last at least 1 hour.
(d) To determine compliance with the $NO_x$ mass per unit output emission limitation, convert the concentration of $NO_x$ in the engine exhaust using Equation 1 of this section:

$$ER = \frac{C_d \times 1.912 \times 10^{-3} \times Q \times T}{HP - hr} \qquad \text{(Eq. 1)}$$

Where:
ER = Emission rate of $NO_x$ in g/HP-hr.
$C_d$ = Measured $NO_x$ concentration in parts per million by volume (ppmv).
$1.912 \times 10^{-3}$ = Conversion constant for ppm $NO_x$ to grams per standard cubic meter at 20 degrees Celsius.
Q = Stack gas volumetric flow rate, in standard cubic meter per hour, dry basis.
T = Time of test run, in hours.
HP-hr = Brake work of the engine, horsepower-hour (HP-hr).
(e) To determine compliance with the CO mass per unit output emission limitation, convert the concentration of CO in the engine exhaust using Equation 2 of this section:

$$ER = \frac{C_d \times 1.164 \times 10^{-3} \times Q \times T}{HP - hr} \qquad \text{(Eq. 2)}$$

Where:
ER = Emission rate of CO in g/HP-hr.
Cd= Measured CO concentration in ppmv.
$1.164 \times 10^{-3}$ = Conversion constant for ppm CO to grams per standard cubic meter at 20 degrees Celsius.
Q = Stack gas volumetric flow rate, in standard cubic meters per hour, dry basis.
T = Time of test run, in hours.
HP-hr = Brake work of the engine, in HP-hr.

(f) For purposes of this subpart, when calculating emissions of VOC, emissions of formaldehyde should not be included. To determine compliance with the VOC mass per unit output emission limitation, convert the concentration of VOC in the engine exhaust using Equation 3 of this section:

$$ER = \frac{C_d \times 1.833 \times 10^{-3} \times Q \times T}{HP - hr} \quad \text{(Eq. 3)}$$

Where:
ER = Emission rate of VOC in g/HP-hr.
Cd= VOC concentration measured as propane in ppmv.
$1.833 \times 10^{-3}$ = Conversion constant for ppm VOC measured as propane, to grams per standard cubic meter at 20 degrees Celsius.
Q = Stack gas volumetric flow rate, in standard cubic meters per hour, dry basis.
T = Time of test run, in hours.
HP-hr = Brake work of the engine, in HP-hr.
(g) If the owner/operator chooses to measure VOC emissions using either Method 18 of 40 CFR part 60, appendix A, or Method 320 of 40 CFR part 63, appendix A, then it has the option of correcting the measured VOC emissions to account for the potential differences in measured values between these methods and Method 25A. The results from Method 18 and Method 320 can be corrected for response factor differences using Equations 4 and 5 of this section. The corrected VOC concentration can then be placed on a propane basis using Equation 6 of this section.

$$RF_i = \frac{C_{Mi}}{C_{Ai}} \quad \text{(Eq. 4)}$$

Where:
RFi= Response factor of compound i when measured with EPA Method 25A.
$C_M i$= Measured concentration of compound i in ppmv as carbon.
$C_A i$= True concentration of compound i in ppmv as carbon.

$$C_{icorr} = RF_i \times C_{imeas} \quad \text{(Eq. 5)}$$

Where:
$Ci_{corr}$= Concentration of compound i corrected to the value that would have been measured by EPA Method 25A, ppmv as carbon.
$Ci_{meas}$= Concentration of compound i measured by EPA Method 320, ppmv as carbon.

$$C_{Peq} = 0.6098 \times C_{icorr} \quad \text{(Eq. 6)}$$

Where:
CPeq= Concentration of compound i in mg of propane equivalent per DSCM.

→ Applicable, performance testing of engine will meet the requirements described above.

**Notification, Reports, and Records for Owners and Operators**
**§ 60.4245 What are my notification, reporting, and recordkeeping requirements if I am an owner or operator of a stationary SI internal combustion engine?**
Owners or operators of stationary SI ICE must meet the following notification, reporting and recordkeeping requirements.
(a) Owners and operators of all stationary SI ICE must keep records of the information in paragraphs (a)(1) through (4) of this section.
(1) All notifications submitted to comply with this subpart and all documentation supporting any notification.
(2) Maintenance conducted on the engine.
(3) If the stationary SI internal combustion engine is a certified engine, documentation from the manufacturer that the engine is certified to meet the emission standards and information as required in 40 CFR parts 90, 1048, 1054, and 1060, as applicable.
(4) If the stationary SI internal combustion engine is not a certified engine or is a certified engine operating in a non-certified manner and subject to §60.4243(a)(2), documentation that the engine meets the emission standards.

→ Applicable, the owner/operator will perform the required record-keeping and notification requirements.

(b) For all stationary SI emergency ICE greater than or equal to 500 HP manufactured on or after July 1, 2010, that do not meet the standards applicable to non-emergency engines,

the owner or operator of must keep records of the hours of operation of the engine that is recorded through the non-resettable hour meter. For all stationary SI emergency ICE greater than or equal to 130 HP and less than 500 HP manufactured on or after July 1, 2011 that do not meet the standards applicable to non-emergency engines, the owner or operator of must keep records of the hours of operation of the engine that is recorded through the non-resettable hour meter. For all stationary SI emergency ICE greater than 25 HP and less than 130 HP manufactured on or after July 1, 2008, that do not meet the standards applicable to non-emergency engines, the owner or operator of must keep records of the hours of operation of the engine that is recorded through the non-resettable hour meter. The owner or operator must document how many hours are spent for emergency operation, including what classified the operation as emergency and how many hours are spent for non-emergency operation.

→ Not applicable, not emergency engine.

(c) Owners and operators of stationary SI ICE greater than or equal to 500 HP that have not been certified by an engine manufacturer to meet the emission standards in §60.4231 must submit an initial notification as required in §60.7(a)(1). The notification must include the information in paragraphs (c)(1) through (5) of this section.
(1) Name and address of the owner or operator;
(2) The address of the affected source;
(3) Engine information including make, model, engine family, serial number, model year, maximum engine power, and engine displacement;
(4) Emission control equipment; and
(5) Fuel used.
(d) Owners and operators of stationary SI ICE that are subject to performance testing must submit a copy of each performance test as conducted in §60.4244 within 60 days after the test has been completed.
[73 FR 3591, Jan. 18, 2008, as amended by 73 FR 59177, Oct. 8, 2008]

→ Not applicable, not emergency engine.

**General Provisions**
**§ 60.4246 What parts of the General Provisions apply to me?**
Table 3 to this subpart shows which parts of the General Provisions in §§60.1 through 60.19 apply to you.

→ Applicable, see Table 3 for applicable general provisions.

**Mobile Source Provisions**
**§ 60.4247 What parts of the mobile source provisions apply to me if I am a manufacturer of stationary SI internal combustion engines or a manufacturer of equipment containing such engines?**
(a) Manufacturers certifying to emission standards in 40 CFR part 90, including manufacturers certifying emergency engines below 130 HP, must meet the provisions of 40 CFR part 90. Manufacturers certifying to emission standards in 40 CFR part 1054 must meet the provisions of 40 CFR part 1054. Manufacturers of equipment containing stationary SI internal combustion engines meeting the provisions of 40 CFR part 1054 must meet the provisions of 40 CFR part 1060 to the extent they apply to equipment manufacturers.
(b) Manufacturers required to certify to emission standards in 40 CFR part 1048 must meet the provisions of 40 CFR part 1048. Manufacturers certifying to emission standards in 40 CFR part 1048 pursuant to the voluntary certification program must meet the requirements in Table 4 to this subpart as well as the standards in 40 CFR 1048.101.
(c) For manufacturers of stationary SI internal combustion engines participating in the voluntary certification program and certifying engines to Table 1 to this subpart, Table 4 to this subpart shows which parts of the mobile source provisions in 40 CFR parts 1048, 1065, and 1068 apply to you. Compliance with the deterioration factor provisions under 40 CFR 1048.205(n) and 1048.240 will be required for engines built new on and after January 1, 2010. Prior to January 1, 2010, manufacturers of stationary internal combustion engines participating in the voluntary certification program have the option to develop their own deterioration factors based on an engineering analysis.
[73 FR 3591, Jan. 18, 2008, as amended by 73 FR 59177, Oct. 8, 2008]

→ Not applicable. Only applies to manufacturers.

**Definitions**

➔ The definitions below were utilized in this applicability review.

**§ 60.4248 What definitions apply to this subpart?**

As used in this subpart, all terms not defined herein shall have the meaning given them in the CAA and in subpart A of this part.

*Certified emissions life* means the period during which the engine is designed to properly function in terms of reliability and fuel consumption, without being remanufactured, specified as a number of hours of operation or calendar years, whichever comes first. The values for certified emissions life for stationary SI ICE with a maximum engine power less than or equal to 19 KW (25 HP) are given in 40 CFR 90.105, 40 CFR 1054.107, and 40 CFR 1060.101, as appropriate. The values for certified emissions life for stationary SI ICE with a maximum engine power greater than 19 KW (25 HP) certified to 40 CFR part 1048 are given in 40 CFR 1048.101(g). The certified emissions life for stationary SI ICE with a maximum engine power greater than 75 KW (100 HP) certified under the voluntary manufacturer certification program of this subpart is 5,000 hours or 7 years, whichever comes first.

*Certified stationary internal combustion engine* means an engine that belongs to an engine family that has a certificate of conformity that complies with the emission standards and requirements in this part, or of 40 CFR part 90, 40 CFR part 1048, or 40 CFR part 1054, as appropriate.

*Combustion turbine* means all equipment, including but not limited to the turbine, the fuel, air, lubrication and exhaust gas systems, control systems (except emissions control equipment), and any ancillary components and sub-components comprising any simple cycle combustion turbine, any regenerative/recuperative cycle combustion turbine, the combustion turbine portion of any cogeneration cycle combustion system, or the combustion turbine portion of any combined cycle steam/electric generating system.

*Compression ignition* means relating to a type of stationary internal combustion engine that is not a spark ignition engine.

*Diesel fuel* means any liquid obtained from the distillation of petroleum with a boiling point of approximately 150 to 360 degrees Celsius. One commonly used form is number 2 distillate oil.

*Digester gas* means any gaseous by-product of wastewater treatment typically formed through the anaerobic decomposition of organic waste materials and composed principally of methane and carbon dioxide (CO2).

*Emergency stationary internal combustion engine* means any stationary internal combustion engine whose operation is limited to emergency situations and required testing and maintenance. Examples include stationary ICE used to produce power for critical networks or equipment (including power supplied to portions of a facility) when electric power from the local utility (or the normal power source, if the facility runs on its own power production) is interrupted, or stationary ICE used to pump water in the case of fire or flood, etc. Stationary SI ICE used for peak shaving are not considered emergency stationary ICE. Stationary ICE used to supply power to an electric grid or that supply power as part of a financial arrangement with another entity are not considered to be emergency engines.

*Engine manufacturer* means the manufacturer of the engine. See the definition of “manufacturer” in this section.

*Four-stroke engine* means any type of engine which completes the power cycle in two crankshaft revolutions, with intake and compression strokes in the first revolution and power and exhaust strokes in the second revolution.

*Gasoline* means any fuel sold in any State for use in motor vehicles and motor vehicle engines, or nonroad or stationary engines, and commonly or commercially known or sold as gasoline.

*Landfill gas* means a gaseous by-product of the land application of municipal refuse typically formed through the anaerobic decomposition of waste materials and composed principally of methane and $CO_2$.

*Lean burn engine* means any two-stroke or four-stroke spark ignited engine that does not meet the definition of a rich burn engine.

*Liquefied petroleum gas* means any liquefied hydrocarbon gas obtained as a by-product in petroleum refining of natural gas production.

*Manufacturer* has the meaning given in section 216(1) of the Clean Air Act. In general, this term includes any person who manufactures a stationary engine for sale in the United States or otherwise introduces a new stationary engine into commerce in the United States. This includes importers who import stationary engines for resale.
*Maximum engine power* means maximum engine power as defined in 40 CFR 1048.801.
*Model year* means either: The calendar year in which the engine was originally produced, or the annual new model production period of the engine manufacturer if it is different than the calendar year. This must include January 1 of the calendar year for which the model year is named. It may not begin before January 2 of the previous calendar year, and it must end by December 31 of the named calendar year. For an engine that is converted to a stationary engine after being placed into service as a nonroad or other non-stationary engine, model year means the calendar year or new model production period in which the engine was originally produced.
*Natural gas* means a naturally occurring mixture of hydrocarbon and non-hydrocarbon gases found in geologic formations beneath the Earth's surface, of which the principal constituent is methane. Natural gas may be field or pipeline quality.
*Other internal combustion engine* means any internal combustion engine, except combustion turbines, which is not a reciprocating internal combustion engine or rotary internal combustion engine.
*Pipeline-quality natural gas* means a naturally occurring fluid mixture of hydrocarbons (e.g., methane, ethane, or propane) produced in geological formations beneath the Earth's surface that maintains a gaseous state at standard atmospheric temperature and pressure under ordinary conditions, and which is provided by a supplier through a pipeline. Pipeline-quality natural gas must either be composed of at least 70 percent methane by volume or have a gross calorific value between 950 and 1,100 British thermal units per standard cubic foot.
*Rich burn engine* means any four-stroke spark ignited engine where the manufacturer's recommended operating air/fuel ratio divided by the stoichiometric air/fuel ratio at full load conditions is less than or equal to 1.1. Engines originally manufactured as rich burn engines, but modified prior to June 12, 2006, with passive emission control technology for $NO_x$(such as pre-combustion chambers) will be considered lean burn engines. Also, existing engines where there are no manufacturer's recommendations regarding air/fuel ratio will be considered a rich burn engine if the excess oxygen content of the exhaust at full load conditions is less than or equal to 2 percent.
*Rotary internal combustion engine* means any internal combustion engine which uses rotary motion to convert heat energy into mechanical work.
*Spark ignition* means relating to either: a gasoline-fueled engine; or any other type of engine with a spark plug (or other sparking device) and with operating characteristics significantly similar to the theoretical Otto combustion cycle. Spark ignition engines usually use a throttle to regulate intake air flow to control power during normal operation. Dual-fuel engines in which a liquid fuel (typically diesel fuel) is used for compression ignition and gaseous fuel (typically natural gas) is used as the primary fuel at an annual average ratio of less than 2 parts diesel fuel to 100 parts total fuel on an energy equivalent basis are spark ignition engines.
*Stationary internal combustion engine* means any internal combustion engine, except combustion turbines, that converts heat energy into mechanical work and is not mobile. Stationary ICE differ from mobile ICE in that a stationary internal combustion engine is not a nonroad engine as defined at 40 CFR 1068.30 (excluding paragraph (2)(ii) of that definition), and is not used to propel a motor vehicle or a vehicle used solely for competition. Stationary ICE include reciprocating ICE, rotary ICE, and other ICE, except combustion turbines.
*Stationary internal combustion engine test cell/stand* means an engine test cell/stand, as defined in subpart PPPPP of this part, that test stationary ICE.
*Stoichiometric* means the theoretical air-to-fuel ratio required for complete combustion.
*Subpart* means 40 CFR part 60, subpart JJJJ.
*Two-stroke engine* means a type of engine which completes the power cycle in single crankshaft revolution by combining the intake and compression operations into one stroke and the power and exhaust operations into a second stroke. This system requires auxiliary scavenging and inherently runs lean of stoichiometric.
*Volatile organic compounds* means volatile organic compounds as defined in 40 CFR 51.100(s).
*Voluntary certification program* means an optional engine certification program that manufacturers of stationary SI internal combustion engines with a maximum engine power greater than 19 KW (25 HP) that do not use gasoline and are not rich burn engines that use

LPG can choose to participate in to certify their engines to the emission standards in §60.4231(d) or (e), as applicable.

[73 FR 3591, Jan. 18, 2008, as amended by 73 FR 59177, Oct. 8, 2008]

**Table 1 to Subpart JJJJ of Part 60—$NO_x$, CO, and VOC Emission Standards for Stationary Non-Emergency SI Engines •100 HP (Except Gasoline and Rich Burn LPG), Stationary SI Landfill/Digester Gas Engines, and Stationary Emergency Engines >25 HP**

| Engine type and fuel | Maximum engine power | Manufacture date | Emission standards[a] | | | | | |
|---|---|---|---|---|---|---|---|---|
| | | | g/HP-hr | | | ppmvd at 15% $O_2$ | | |
| | | | $NO_x$ | CO | VOC[d] | $NO_x$ | CO | VOC[d] |
| Non-Emergency SI Natural Gas[b] and Non-Emergency SI Lean Burn LPG[b] | 100•HP<500 | 7/1/2008<br>1/1/2011 | 2.0<br>1.0 | 4.0<br>2.0 | 1.0<br>0.7 | 160<br>82 | 540<br>270 | 86<br>60 |
| Non-Emergency SI Lean Burn Natural Gas and LPG | 500•HP<1,350 | 1/1/2008<br>7/1/2010 | 2.0<br>1.0 | 4.0<br>2.0 | 1.0<br>0.7 | 160<br>82 | 540<br>270 | 86<br>60 |
| Non-Emergency SI Natural Gas and Non-Emergency SI Lean Burn LPG (except lean burn 500=•HP<1,350) | HP•500<br>HP•500 | 7/1/2007<br>7/1/2010 | 2.0<br>1.0 | 4.0<br>2.0 | 1.0<br>0.7 | 160<br>82 | 540<br>270 | 86<br>60 |
| Landfill/Digester Gas (except lean burn 500•HP<1,350) | HP<500 | 7/1/2008<br>1/1/2011 | 3.0<br>2.0 | 5.0<br>5.0 | 1.0<br>1.0 | 220<br>150 | 610<br>610 | 80<br>80 |
| | HP•500 | 7/1/2007<br>7/1/2010 | 3.0<br>2.0 | 5.0<br>5.0 | 1.0<br>1.0 | 220<br>150 | 610<br>610 | 80<br>80 |
| Landfill/Digester Gas Lean Burn | 500•HP<1,350 | 1/1/2008<br>7/1/2010 | 3.0<br>2.0 | 5.0<br>5.0 | 1.0<br>1.0 | 220<br>150 | 610<br>610 | 80<br>80 |
| | | | | | | | | |
| Emergency | 25>HP<130<br>HP•130 | 1/1/2009 | [c]10<br>2.0 | 387<br>4.0 | N/A<br>1.0 | N/A<br>160 | N/A<br>540 | N/A<br>86 |

[a]Owners and operators of stationary non-certified SI engines may choose to comply with the emission standards in units of either g/HP-hr or ppmvd at 15 percent O2.
[b]Owners and operators of new or reconstructed non-emergency lean burn SI stationary engines with a site rating of greater than or equal to 250 brake HP located at a major source that are meeting the requirements of 40 CFR part 63, subpart ZZZZ, Table 2A do not have to comply with the CO emission standards of Table 1 of this subpart.
[c]The emission standards applicable to emergency engines between 25 HP and 130 HP are in terms of $NO_x$+HC.
[d]For purposes of this subpart, when calculating emissions of volatile organic compounds, emissions of formaldehyde should not be included.

**Table 2 to Subpart JJJJ of Part 60—Requirements for Performance Tests**

[As stated in §60.4244, you must comply with the following requirements for performance tests within 10 percent of 100 percent peak (or the highest achievable) load]

| For each | Complying with the requirement to | You must | Using | According to the following requirements |
|---|---|---|---|---|
| 1. Stationary SI internal combustion engine demonstrating compliance according to §60.4244. | a. limit the concentration of $NO_x$ in the stationary SI internal combustion engine exhaust. | i. Select the sampling port location and the number of traverse points; | (1) Method 1 or 1A of 40 CFR part 60, appendix A or ASTM Method D6522–00(2005)[a]. | (a) If using a control device, the sampling site must be located at the outlet of the control |

| | | | | |
|---|---|---|---|---|
| | | | | device. |
| | ii. Determine the $O_2$ concentration of the stationary internal combustion engine exhaust at the sampling port location; | (2) Method 3, 3A, or 3B[b] of 40 CFR part 60, appendix A or ASTM Method D6522–00(2005)[a]. | (b) Measurements to determine $O_2$ concentration must be made at the same time as the measurements for $NO_x$ concentration. | |
| | iii. Determine the exhaust flowrate of the stationary internal combustion engine exhaust; | (3) Method 2 or 19 of 40 CFR part 60. | | |
| | iv. If necessary, measure moisture content of the stationary internal combustion engine exhaust at the sampling port location; and | (4) Method 4 of 40 CFR part 60, appendix A, Method 320 of 40 CFR part 63, appendix A, or ASTM D6348–03 (incorporated by reference, see §60.17). | (c) Measurements to determine moisture must be made at the same time as the measurement for $NO_x$ concentration. | |
| | v. Measure $NO_x$ at the exhaust of the stationary internal combustion engine. | (5) Method 7E of 40 CFR part 60, appendix A, Method D6522–00(2005)[a], Method 320 of 40 CFR part 63, appendix A, or ASTM D6348–03 (incorporated by reference, see §60.17). | (d) Results of this test consist of the average of the three 1-hour or longer runs. | |
| | b. limit the concentration of CO in the stationary SI internal combustion engine exhaust. | i. Select the sampling port location and the number of traverse points; | (1) Method 1 or 1A of 40 CFR part 60, appendix A. | (a) If using a control device, the sampling site must be located at the outlet of the control device. |
| | ii. Determine the $O_2$ concentration of the stationary internal combustion engine exhaust at the sampling port location; | (2) Method 3, 3A, or 3Bb of 40 CFR part 60, appendix A or ASTM Method D6522–00(2005)[a]. | (b) Measurements to determine $O_2$ concentration must be made at the same time as the measurements for CO concentration. | |
| | iii. Determine the exhaust flowrate of the stationary internal combustion engine exhaust; | (3) Method 2 or 19 of 40 CFR part 60. | | |

| | | | | |
|---|---|---|---|---|
| | iv. If necessary, measure moisture content of the stationary internal combustion engine exhaust at the sampling port location; and | (4) Method 4 of 40 CFR part 60, appendix A, Method 320 of 40 CFR part 63, appendix A, or ASTM D6348–03 (incorporated by reference, see §60.17). | (c) Measurements to determine moisture must be made at the same time as the measurement for CO concentration. | |
| | v. Measure CO at the exhaust of the stationary internal combustion engine. | (5) Method 10 of 40 CFR part 60, appendix A, ASTM Method D6522–00(2005)[a], Method 320 of 40 CFR part 63, appendix A, or ASTM D 6348–03 (incorporated by reference, see §60.17). | (d) Results of this test consist of the average of the three 1-hour or longer runs. | |
| | c. limit the concentration of VOC in the stationary SI internal combustion engine exhaust. | i. Select the sampling port location and the number of traverse points; | (1) Method 1 or 1A of 40 CFR part 60, appendix A. | (a) If using a control device, the sampling site must be located at the outlet of the control device. |
| | ii. Determine the $O_2$ concentration of the stationary internal combustion engine exhaust at the sampling port location; | (2) Method 3, 3A, or 3B[b] of 40 CFR part 60, appendix A or ASTM Method D6522–00(2005)[a]. | (b) Measurements to determine $O_2$ concentration must be made at the same time as the measurements for VOC concentration. | |
| | iii. Determine the exhaust flowrate of the stationary internal combustion engine exhaust; | (3) Method 2 or 19 of 40 CFR part 60. | | |
| | iv. If necessary, measure moisture content of the stationary internal combustion engine exhaust at the sampling port location; and | (4) Method 4 of 40 CFR part 60, appendix A, Method 320 of 40 CFR part 63, appendix A, or ASTM D6348–03 (incorporated by reference, see §60.17). | (c) Measurements to determine moisture must be made at the same time as the measurement for VOC concentration. | |
| | v. Measure VOC at the exhaust of the stationary internal combustion engine. | (5) Methods 25A and 18 of 40 CFR part 60, appendix A, Method 25A with the use of a methane cutter as described in 40 CFR 1065.265, | (d) Results of this test consist of the average of the three 1-hour or longer runs. | |

| | | | | |
|---|---|---|---|---|
| | | Method 18 or 40 CFR part 60, appendix A,[cd] Method 320 of 40 CFR part 63, appendix A, or ASTM D6348–03 (incorporated by reference, see §60.17). | | |

[a]ASTM D6522–00 is incorporated by reference; see 40 CFR 60.17. Also, you may petition the Administrator for approval to use alternative methods for portable analyzer.
[b]You may use ASME PTC 19.10–1981, Flue and Exhaust Gas Analyses, for measuring the $O_2$ content of the exhaust gas as an alternative to EPA Method 3B.
[c]You may use EPA Method 18 of 40 CFR part 60, appendix A, provided that you conduct an adequate presurvey test prior to the emissions test, such as the one described in OTM 11 on EPA's Web site ( *http://www.epa.gov/ttn/emc/prelim/otm11.pdf* ).
[d]You may use ASTM D6420–99 (2004), Test Method for Determination of Gaseous Organic Compounds by Direct Interface Gas Chromatography/Mass Spectrometry as an alternative to EPA Method 18 for measuring total nonmethane organic.

**Table 3 to Subpart JJJJ of Part 60—Applicability of General Provisions to Subpart JJJJ**

[As stated in §60.4246, you must comply with the following applicable General Provisions]

| General provisions citation | Subject of citation | Applies to subpart | Explanation |
|---|---|---|---|
| §60.1 | General applicability of the General Provisions | Yes | |
| §60.2 | Definitions | Yes | Additional terms defined in §60.4248. |
| §60.3 | Units and abbreviations | Yes | |
| §60.4 | Address | Yes | |
| §60.5 | Determination of construction or modification | Yes | |
| §60.6 | Review of plans | Yes | |
| §60.7 | Notification and Recordkeeping | Yes | Except that §60.7 only applies as specified in §60.4245. |
| §60.8 | Performance tests | Yes | Except that §60.8 only applies to owners and operators who are subject to performance testing in subpart JJJJ. |
| §60.9 | Availability of information | Yes | |
| §60.10 | State Authority | Yes | |
| §60.11 | Compliance with standards and maintenance requirements | Yes | Requirements are specified in subpart JJJJ. |
| §60.12 | Circumvention | Yes | |
| §60.13 | Monitoring requirements | No | |
| §60.14 | Modification | Yes | |

| | | | |
|---|---|---|---|
| §60.15 | Reconstruction | Yes | |
| §60.16 | Priority list | Yes | |
| §60.17 | Incorporations by reference | Yes | |
| §60.18 | General control device requirements | No | |
| §60.19 | General notification and reporting requirements | Yes | |

**Table 4 to Subpart JJJJ of Part 60—Applicability of Mobile Source Provisions for Manufacturers Participating in the Voluntary Certification Program and Certifying Stationary SI ICE to Emission Standards in Table 1 of Subpart JJJJ**

[As stated in §60.4247, you must comply with the following applicable mobile source provisions if you are a manufacturer participating in the voluntary certification program and certifying stationary SI ICE to emission standards in Table 1 of subpart JJJJ]

| Mobile source provisions citation | Subject of citation | Applies to subpart | Explanation |
|---|---|---|---|
| 1048 subpart A | Overview and Applicability | Yes | |
| 1048 subpart B | Emission Standards and Related Requirements | Yes | Except for the specific sections below. |
| 1048.101 | Exhaust Emission Standards | No | |
| 1048.105 | Evaporative Emission Standards | No | |
| 1048.110 | Diagnosing Malfunctions | No | |
| 1048.140 | Certifying Blue Sky Series Engines | No | |
| 1048.145 | Interim Provisions | No | |
| 1048 subpart C | Certifying Engine Families | Yes | Except for the specific sections below. |
| 1048.205(b) | AECD reporting | Yes | |
| 1048.205(c) | OBD Requirements | No | |
| 1048.205(n) | Deterioration Factors | Yes | Except as indicated in 60.4247(c). |
| 1048.205(p)(1) | Deterioration Factor Discussion | Yes | |
| 1048.205(p)(2) | Liquid Fuels as they require | No | |
| 1048.240(b)(c)(d) | Deterioration Factors | Yes | |
| 1048 subpart D | Testing Production-Line Engines | Yes | |
| 1048 subpart E | Testing In-Use Engines | No | |
| 1048 subpart F | Test Procedures | Yes | |
| 1065.5(a)(4) | Raw sampling (refers reader back to the specific emissions regulation for guidance) | Yes | |
| 1048 subpart G | Compliance Provisions | Yes | |
| 1048 subpart H | Reserved | | |

| | | | |
|---|---|---|---|
| 1048 subpart I | Definitions and Other Reference Information | Yes | |
| 1048 appendix I and II | Yes | | |
| 1065 (all subparts) | Engine Testing Procedures | Yes | Except for the specific section below. |
| 1065.715 | Test Fuel Specifications for Natural Gas | No | |
| 1068 (all subparts) | General Compliance Provisions for Nonroad Programs | Yes | Except for the specific sections below. |
| 1068.245 | Hardship Provisions for Unusual Circumstances | No | |
| 1068.250 | Hardship Provisions for Small-Volume Manufacturers | No | |
| 1068.255 | Hardship Provisions for Equipment Manufacturers and Secondary Engine Manufacturers | No | |

# Appendix 6

# Pre-Permit Construction Approval Checklist

**Department of Environmental Quality**
1410 N. Hilton, Boise, ID 83706
For assistance, call the
Air Permit Hotline - 1-877-5PERMIT



# 15- Day Pre-Permit Construction Approval Application Completeness Checklist

**This checklist is designed to aid the applicant in submitting a complete pre-permit construction approval application. This checklist should be completed and submitted with the pre-permit construction approval application.**

## I. Actions Needed Before Submitting Application

☒ Refer to the Rule. Read the Pre-Permit Construction requirements contained in IDAPA 58.01.01.213, Rules for the Control of Air Pollution in Idaho.

☒ Refer to DEQ's Pre-Permit Construction Approval Guidance Document. DEQ has developed a guidance document to aid applicants in submitting a complete pre-permit construction approval application. The guidance document is located on DEQ's website (go to http://www.deq.idaho.gov/air/permits_forms/permitting/ptc_prepermit_guidance.pdf

☒ Consult with DEQ Representatives. Schedule a pre-application meeting with DEQ to discuss application requirements before submitting the pre-permit construction approval application. Schedule the meeting by contacting the DEQ Air Permit Hotline at **877-5PERMIT**. The meeting can be in person or on the phone. Refer to IDAPA 58.01.01.213.01b.

☒ Schedule Informational Meeting. Schedule an informational meeting before submitting the pre-permit construction approval application for the purposes of satisfying IDAPA 58.01.01.213.02.a. The purpose for the informational meeting is to provide information about the proposed project to the general public. Refer to IDAPA 58.01.01.213.01.c.

☒ Submit Ambient Air Quality Modeling Protocol. It is required that an ambient air quality modeling protocol be submitted to DEQ at least two (2) weeks before the pre-permit construction approval application is submitted. Contact DEQ's Air Quality Hotline at **877-5PERMIT** for information about the protocol.

☒ Written DEQ Approved Protocol. Written DEQ approval of the modeling protocol must be received before the pre-permit construction approval application is submitted. Refer to IDAPA 58.01.01.213.01.c.

## II. Application Content

**Application content should be prepared using the checklist below. The checklist is based on the requirements contained in IDAPA 58.01.01.213 and DEQ's Pre-Permit Construction Approval Guidance Document.**

☒ Pre-Permit Construction Eligibility and Proof of Eligibility. Pre-permit construction approval is available for minor sources and for minor modifications only. Emissions netting and emissions offsets are not allowed to be used. A certified proof of pre-permit construction eligibility must be submitted with the pre-permit construction approval application. Refer to IDAPA 58.01.01.213.01.

☒ Request to Construct Before Obtaining a Permit to Construct. A letter requesting the ability to construct before obtaining the required permit to construct must be submitted with the pre-permit construction approval application. Refer to IDAPA 58.01.01.213.01.c.

☒ Apply for a Permit to Construct. Submit a Permit to Construct application using forms available on DEQ's website at http://www.deq.idaho.gov/air/permits_forms/forms/ptc_general_application.pdf. Refer to IDAPA 58.01.01.213.01.a.

☒ Permit to Construct Application Fee. The permit to construct application fee of $1000 must be submitted at the time the original pre-permit construction approval application is submitted. Refer to IDAPA 58.01.01.224. If the pre-permit construction approval is denied and a new application is submitted, a new $1,000 application fee will be required to be submitted. The application fee is not transferable or refundable. The application fee can be paid by check, credit card or Electronic Funds Transfer (EFT). If you choose to pay by credit card or EFT, contact DEQ's Fiscal Office at (208) 373-0502 to complete the necessary paper work. If you choose to pay by check, enclose the check with your pre-permit construction approval application.

☒ Notice of Informational Meeting. Within 10 days after the submittal of the pre-permit construction approval application, an informational meeting must be held in at least one location in the region where the stationary source will be located. The information meeting must be made known by notice published at least 10 days before the informational meeting in a newspaper of general circulation in the county in which the stationary source will be located. A copy of this notice, as published, must be submitted with the pre-permit construction approval application. Refer to IDAPA 58.01.01.213.02.a. Additional information regarding the informational meeting is included in DEQ's Pre-Permit Construction Approval Guidance Document. (go to http://www.deq.idaho.gov/air/permits_forms/permitting/ptc_prepermit_guidance.pdf)

☒ Process Description(s). The process or processes for which pre-permit construction approval is requested must be described in sufficient detail and clarity such that a member of the general public not familiar with air quality can clearly understand the proposed project. A process flow diagram is required for each process for which pre-permit construction approval is requested. Refer to IDAPA 58.01.01.213.01.c.

☒ Equipment List. All equipment that will be used for which pre-permit construction approval is requested must be described in detail. Such description includes, but is not limited to, manufacturer, model number or other descriptor, serial number, maximum process rate, proposed process rate, maximum heat input capacity, stack height, stack diameter, stack gas flowrate, stack gas temperature, etc. All equipment that will be used for which pre-permit construction approval is requested must be clearly labeled on the process flow diagram. Refer to IDAPA 58.01.01.213.01.c.

☒ Scaled Plot Plan. It is required a scaled plot plan be included in the permit to construct application and it must clearly label the location of each proposed process and the equipment that will be used in the process.

☒ Proposed Emissions Limits and Modeled Ambient Concentration for All Regulated Air Pollutants. All proposed emission limits and modeled ambient concentrations for all regulated air pollutants must demonstrate compliance with all applicable air quality rules and regulations. Regulated air pollutants include criteria air pollutants ($PM_{10}$, $SO_x$, $NO_2$, $O_3$, CO, lead), toxic air pollutants listed pursuant to IDAPA 58.01.01.585 and 586, and hazardous air pollutants listed pursuant to Section 112 of the 1990 Clean Air Act Amendments (go to http://www.epa.gov/ttn/atw/188polls.html). Describe in detail how the proposed emissions limits and modeled ambient concentrations demonstrate compliance with each applicable air quality rule and regulation. It is requested that emissions calculations, assumptions, and documentation be submitted with sufficient detail so DEQ can verify the validity of the emissions estimates. Refer to IDAPA 58.01.01.213.01.c.

☒ Restrictions on a Source's Potential to Emit. Any proposed restriction on a source's potential to emit such that permitted emissions will be either below major source levels or below a significant increase must be described in detail in the pre-permit construction approval application. Refer to IDAPA 58.01.01.213.01.d.

☒ List all Applicable Air Quality Rules and Regulations. All applicable rules and regulations must be cited by the rule or regulation section/subpart that applies for each emissions unit. Refer to IDAPA 58.01.01.213.01.c.

☒ Certification of Pre-Permit Construction Approval Application. The pre-permit construction approval application must be signed by the Responsible Official and must contain a certification signed by the Responsible Official. The certification must state that, based on information and belief formed after reasonable inquiry, the statements and information in the document are true, accurate, and complete. Refer to IDAPA 58.01.01.213.01.d and IDAPA 58.01.01.123.

☒ Submit the Pre-Construction Approval Application. Submit the pre-permit construction approval application and application fee to the following address:

Department of Environmental Quality
Air Quality Division
Stationary Source Program
1410 North Hilton
Boise, ID 83706-1255