RECEIVED
JUL 06 2016
DEPARTMENT OF ENVIRONMENTAL QUALITY
STATE A Q PROGRAM

Permit-to-Construct Initial Permit Application

YMC, Inc.
Meridian Facility

Prepared for:
YMC, Inc.
2975 E. Lanark Street
Meridian, ID 83642
Contact: Jan Korvig
Ph: 208-888-1727

Prepared by:
Stantec Consulting Services, Ltd
7669 W. Riverside Drive, Suite 101
Boise, ID 83714
Contact: Eric Clark P.E.
Ph: 208-853-0883

July 7, 2016

Sign-off Sheet

This document entitled Permit-to-Construct Initial Permit Application was prepared by Stantec Consulting International Ltd. ("Stantec") for the account of YMC, Inc. (YMC). Any reliance on this document by any third party is strictly prohibited. The material in it reflects Stantec's professional judgment in light of the scope, schedule and other limitations stated in the document and in the contract between Stantec and the Client. The opinions in the document are based on conditions and information existing at the time the document was published and do not take into account any subsequent changes. In preparing the document, Stantec did not verify information supplied to it by others. Any use which a third party makes of this document is the responsibility of such third party. Such third party agrees that Stantec shall not be responsible for costs or damages of any kind, if any, suffered by it or any other third party as a result of decisions made or actions taken based on this document.

Prepared by _____
(signature)

Eric Clark, P.E.

Reviewed by Stephen West
_____
(signature)

Stephen West

Reviewed by _____
(signature)

Andrew Wilkin

Stantec

Table of Contents

1.0 INTRODUCTION 1.1

2.0 PROCESS DESCRIPTION 2.1
2.1 EMISSIONS SOURCES 2.1
2.1.1 Potential to Emit Totals 2.2
2.1.2 Proposed Usage Rates 2.3
2.2 SOURCE PARAMETERS 2.4
2.2.1 Parameter Details 2.5
2.2.2 Below Regulatory Concern (BRC) Evaluation 2.5
2.2.3 Toxic Air Pollutants (TAPs) 2.6

3.0 REGULATORY APPLICABILITY 3.1
3.1 STATE REGULATORY APPLICABILITY 3.1
3.1.1 Certification of Documents 3.1
3.1.2 Excess Emissions 3.1
3.1.3 Ambient Air Quality Standards for Specific air Pollutants 3.2
3.1.4 Toxic Air Pollutants 3.2
3.1.5 New Source Performance Standards 3.2
3.1.6 National Emission Standards for Hazardous Air Pollutants 3.2
3.1.7 Open Burning 3.3
3.1.8 Visible Emissions 3.3
3.1.9 Rules for Control of Fugitive Dust 3.3
3.1.10 Fuel Burning Equipment - Particulate Matter 3.3
3.1.11 Particulate Matter - Process Weight Limitations 3.3
3.1.12 Odors 3.4
3.2 FEDERAL REGULATORY APPLICABILITY 3.4
3.2.1 National Ambient Air Quality Standards (NAAQS) 3.4
3.2.2 Title V (Part 70) Operating Permit 3.5
3.2.3 National Emission Standards for Hazardous Air Pollutants (NESHAPs) 3.5
3.2.4 New Source Review (NSR) Requirements 3.5
3.2.5 New Source Performance Standards (NSPS) 3.5
3.2.6 Acid Rain Requirements 3.5
3.2.7 Risk Management Programs for Chemical Accidental Release Prevention 3.6

LIST OF TABLES

Table 2-1 PTE Emission Estimates 2.3
Table 2-2 Actual Emission Estimates 2.3
Table 2-3 Stack Parameters 2.5
Table 2-4 Volume Source Parameters 2.5
Table 2-4 Below Regulatory Concern Evaluation (tpy) 2.6
Table 2-5 Modeled Toxic Air Pollutants 2.6

Table 3-1 State Regulatory Applicability Summary 3.1
Table 3-2 Federal Regulatory Applicability Summary 3.4

LIST OF APPENDICES

APPENDIX A SITE SELECTION MAP A.1

APPENDIX B DEQ PTC FORMS AND CHECKLISTS B.1

APPENDIX C EMISSION INVENTORY C.1

APPENDIX D AMBIENT AIR ANALYSIS D.1

APPENDIX E MANUFACTURER DATA E.2

1.0 INTRODUCTION

YMC, Inc. (YMC) is proposing to acquire an initial Permit to Construct (PTC) for an existing facility. YMC conducts primarily metal fabrication of both commercial and residential heating and cooling ductwork. The facility is located at 2975 E. Lanark Street in Meridian, Idaho. The facility has been operating at this location since 1988. While YMC has not obtained a permit in the past, they have reviewed all of the potential emissions and determined that a permit is required due to emissions of nickel (Ni) which is a regulated pollutant under IDAPA 58.01.01586. The facility is taking a proactive approach to rectify this oversight.

This application assumes that there is a multitude of processes occurring simultaneously. However, many of said processes will not, or cannot, operate simultaneously. There are several assumptions regarding emission estimates, all of which are outlined in Section 2.1.1. Typical operation for many of the units is less than 50% of the proposed rates. Therefore, the total emissions assumed in this application are extremely conservative.

2.0 PROCESS DESCRIPTION

There are several work processes, equipment, materials and emission controls that are involved in the fabrication shop. The primary focus is fabrication of sheet metal product. This includes shearing, cutting and forming metal. The metal used is primarily galvanized and stainless steel.

Arc welding is also performed within the fabrication shop. Electrodes used include: flux core and gas metal. Another focus is metal cutting. YMC has three emission units that cut metal during the fabrication process. The Plasma Cutting Table, Laser Cutting Machine and abrasive cutting (chop saws) are utilized for metal fabrication.

Several types of control devices are applied throughout the facility. HEPA carbon filters are used to control welding operations. Additionally, both the laser and plasma cutters use Robovent Plaser filtration devices. The surface finishing machine controls dust via an ATI wet dust collector.

Lastly, there are several natural gas heaters that are considered radiant or unit heaters. All heaters range from 45,000 Btu/hr to150,000 Btu/hr.

2.1 EMISSIONS SOURCES

Emissions sources at the facility will include the following:

- Metal Cutters
- Welding Operations
- Surface Finishing Machine
- Natural Gas Heaters

Metal Cutting Devices

The YMC facility operates three cutting devices throughout the working day. Emissions are calculated based the total volume of metal removed by each cut. Required elements include the speed of the cut (inches per minute), the width of each cut, the maximum size of metal being cut and the density of the material.

The total weight of metal removed by cut is calculated by multiplying the volume by the density of the material. The specific gravity of the galvanized and stainless steel is similar (7.83 and 7.7) according to the Iowa department of Natural resources. Those values equate to a density in lb/in^3 of 0.2828 and 0.2782, respectively[1]. Similarly, the volume equals the cut speed multiplied by the kerf (width of cut), then multiplied by the size of material.

The Laser cutting machine average cut speed is 250" per minute with a kerf of 0.004". The maximum size material is ½" stainless steel. The Plasma cutting table averages a speed of

[1] Iowa Department of Natural Resources, Plasma_laser cutting spreadsheet. http://www.iowadnr.gov/Environmental-Protection/Air-Quality/Emissions-Inventory/Emissions-Estimate-Tools

105"/min, a kerf of 0.1" and a maximum size of 20 gauge (0.0396") galvanized steel. The chop saw's worst-case emissions scenario is identical to that of the plasma cutter.

According to the South Coast Air Quality District[2], PM_{10} emissions comprise 50% of total PM. In addition, the PM Emission Factor for plasma/laser arc cutting is 0.12 lb/lb. Therefore, a multiplier of 0.12 was applied to the total weight of metal removed by cut and PM_{10} emissions were reduced by half. For conservatism, $PM_{2.5}$ was assumed equivalent to PM_{10}. As stated above, both the plasma and laser cutters both are or will be fitted with a RoboVent Plaser 3 filtration system. According to email correspondence with the manufacturer, these units control dust and most metal fumes at 99.9% down to 0.3 microns.

Welding

YMC performs some welding onsite. Gas Metal Arc Welding and flux cored processes are utilized. The E-71 and E-70S electrodes are used. Applicable AP-42 emission factors section 12.19, tables 1 and 2. Total usage is not expected to exceed 7.8 lb/day flux and 11.2 lb/day gas metal. Annual usage is expected to be no greater than 2,000 lb and 2,800 lb, respectively. All welding is controlled by a Donaldson Torit Prota Trunk, which meets MERV 15 (90%) for particulate and fumes[3].

Natural Gas Heaters and Generator

YMC operates 18 natural gas heaters for comfort throughout the colder months of the year. The sizes of the units range from 0.045 to 0.15 MMBtu/hr. For maximum conservatism, it is assumed that they operate continually throughout the year. The intent with this assumption is to potentially eliminate all recordkeeping associated with these units. Emission factors from AP-42 Section 1.4 were utilized to establish emission estimates.

Surface Finishing Machine

Particulate emissions derived from this process are based on the amount of abrasive used. The maximum weight between galvanized and stainless steel was assumed (7.871lb/ft^2)[4]. Usage rates are assumed at 40 ft^2/week and 280 ft^2/yr. Based on a five day work week and 1hr/day rate the lb/hr rate assumes 8ft^2. Emissions are controlled by an ATI West Dust Collector at 99.3%. All emission factors were derived from AP-42, section 12.5 for machine scarfing.

2.1.1 Potential to Emit Totals

All emissions were established by obtaining data through a records review at the facility, multiple site visits, interviews, applicable EPA data or other emission factor sources described above.

---

[2] South Coast Air District metal cutting evaluation. https://yosemite.epa.gov/r9/air/epss.nsf/6924c72e5ea10d5e882561b100685e04/a5169187cd5c065088257790005d840b/$FILE/Evaluation.pdf

[3] http://www.allergyclean.com/understanding-merv-or-the-minimum-efficiency-reporting-value/

[4] http://www.armstrongmetalcrafts.com/Reference/SheetMetalGaugeWeight.aspx

Potential to Emit (PTC) emissions were calculated assuming continuous operations of all sources. All emissions were assessed using daily usage rates adjusted to hourly rates and multiplied by 8,760 (24 hr/day) hours per year. The table below illustrates the maximum potential tons per year for all criteria pollutants and hazardous air pollutants.

Table 2-1 PTE Emission Estimates

PTE tons per year Emissions							
Process	**PM_{10}**	**$PM_{2.5}$**	**NO_x**	**SO_2**	**CO**	**VOC**	**HAPs**
Cutting	1.86	1.86	--	--	--	--	1.08E-01
Welding	5.41E-03	5.41E-03	--	--	--	--	4.83E-03
Grinding	1.93E-04	1.93E-04	--	--	--	--	--
NG Heaters	5.51E-02	5.51E-02	0.725	4.35E-03	0.609	3.99E-02	1.37E-02
Total	**1.917**	**1.917**	**0.725**	**4.35E-03**	**0.609**	**3.99E-02**	**0.127**

2.1.2 Proposed Usage Rates

YMC utilizes a variety of products during the fabrication process. The emissions determined for this application are based on usage rates that equate to maximum usage rates. All emission calculations are based on those daily and annual rates.

2.1.2.1 Actual Emission Totals

The table below illustrates the actual proposed annual emissions based on desired usage rates.

Table 2-2 Actual Emission Estimates

Actual tons per year Emissions							
Process	**PM_{10}**	**$PM_{2.5}$**	**NOx**	**SO2**	**CO**	**VOC**	**HAPs**
Cutting	0.139	0.139	--	--	--	--	7.22E-04
Welding	1.25E-03	1.25E-03	--	--	--	--	1.12E-03
Grinding	7.71E-07	7.71E-07	--	--	--	--	--
NG Heaters	5.51E-02	5.51E-02	0.725	4.35E-03	0.609	3.99E-02	1.37E-02
Total	**0.195**	**0.195**	**0.725**	**4.35E-03**	**0.609**	**3.99E-02**	**1.56E-02**

The following assumptions were applied to obtain the estimates shown above.

- Metal Cutting
  - Laser: 250"/min; max size ½" stainless steel; 8 hr/day, 2024 hr/yr
    - 99.9% control Robovent Plaser 3 Unit
  - Plasma: 105"/min; max size 20 gauge galvanized steel; 8 hr/day, 1250 hr/yr

        - 99.9% control Robovent Plaser 3 Unit
    - Chop Saw: 105"/min; max size 20 gauge galvanized steel; 0.5 hr/day, 50 hr/yr
- Heaters – 8,760 hr/yr
    - AP-42 Section 1.4
- Welding – 7.8 lb/day and 11.2 lb/day; 2,000 lb/yr and 2,800 lb/yr
    - E71 and ER308 Electrodes; AP-42 Table 12.19-1 & 2
    - 90% control MERV 15
- Surface Finishing Machine
    - Weight on 7.871 lb/ft²; 1 hr/day; 40 ft²/week; 280 ft²/yr
    - AP-42 Section 12-5, Table 1 scarfing
    - 99.3% control ATI Wet Dust Collector

2.2 SOURCE PARAMETERS

There is a fabrication shop, shed and office within the facility where emissions of various types are generated. Most emission points are considered point sources, whereas five are considered volume sources. All point sources are rain capped or horizontally oriented with the exception of the laser and plasma cutters (RoboVent Plaser 3). The rain caps include unit heaters 1-10. There are also five RTU natural gas units that are horizontal. Reliable flow data was not available; thus, to ensure conservatism, a 0.001 m/s exit velocity was assumed. The RTU vents are rectangular with dimensions 2.5" by 3". An equivalent diameter was calculated. The following is the equation applied that resulted in an approximate diameter of 3".

$$D = 1.3 * \frac{(a * b)^{0.625}}{(a + b)^{0.25}}$$

Where a = length of side in inches; b = length of side in inches

In addition, the laser cutting machine and plasma cutter exit point is 18" by 14" or an equivalent diameter of 17.3". Direct flow measurements were made via anemometer (laser and plasma 1962 acfm).

All stack heights were determined by direct measurement conducted by YMC. Exit temperatures were established via direct measurement for the laser and plasma cutter. Other temperatures were provided directly from YMC staff via engineeringtoolbox.com for a gas-fired heating appliance without a fan hood.

The volume sources are three other unit heaters, welding operations and the chop saws. The facility contains three 16' by 16' garage-type door openings. One door is along the east of the shop, which is where all welding occurs. The other doors are along the west and south side of the building. The abrasive cutting (chop saws) are nearest the southern opening. One heater is nearest each opening. Based on standard modeling guidelines, the release height of all volume sources assumes the midpoint of the each opening (8 ft). The three openings are adjacent to the building. Thus, the vertical dimension is calculated by the height of the opening divided by

2.15 (16/2.15 = 7.442 ft). Similarly, the lateral or horizontal dimension is derived as single volume sources where the length of the opening is divided by 4.3 (16/4.3 = 3.721 ft).

2.2.1 Parameter Details

All stack parameters are either derived from manufacturer specifications or direct measurements taken by the facility. The table below shows the parameters of each stack.

Table 2-3 Stack Parameters

Stack	Stack Height (ft)	Temperature (°F)	Stack Diameter (inches)	Exit velocity (m/s)
Laser	26	85	18	5.27
Plasma	26	85	18	5.27
UH1	23	460	4	0.001
UH2	23	460	4	0.001
UH3	23	460	4	0.001
UH4	23	460	4	0.001
UH5	23	460	4	0.001
UH6	23	460	4	0.001
UH7	30	460	4	0.001
UH8	30	460	4	0.001
UH9	30	460	4	0.001
UH10	30	460	4	0.001
RTU1	29	460	3	0.001
RTU2	26	460	3	0.001
RTU3	26	460	3	0.001
RTU4	26	460	3	0.001
RTU5	22	460	3	0.001

Table 2-4 Volume Source Parameters

Volume Source	Release Height (ft)	Horizontal Dimension (ft)	Vertical Dimension (ft)
UH11	8	3.721	7.442
UH12	8	3.721	7.442
UH13	8	3.721	7.442
Welding	8	3.721	7.442
Abrasive	8	3.721	7.442

2.2.2 Below Regulatory Concern (BRC) Evaluation

The Idaho Department of Environmentally Quality (DEQ) Air Quality Rules identify a Below Regulatory Concern (BRC) threshold. It is defined as less than 10% of significant as defined by section 006 of the Rules. BRC typically applies only for exception determinations outlined in Sections 220-223 of IDAPA 58.01.01. However, DEQ has instituted a policy whereby facilities can

demonstrate to BRC status for specific criteria pollutants and not be required to conduct an ambient air quality analysis for said pollutants.

Table 2-4 illustrates the comparison to actual emissions and BRC thresholds. As a result, none of the criteria pollutants exceed BRC. Therefore, modeling is not required for criteria pollutant National Ambient Air Quality Standards (NAAQS). Individual VOCs may be considered toxic air pollutants (TAPs), as defined by DEQ, and require evaluation. The TAPs evaluation is outlined in Section 2.3.

Table 2-5 Below Regulatory Concern Evaluation (tpy)

Threshold	PM_{10}	$PM_{2.5}$	NO_x	SO_2	CO	VOC
Significance Level	15	10	40	40	100	40
BRC (10% of Significance)	1.5	1.0	4	4	10	4
Proposed Emissions	0.195	0.195	0.725	4.53E-03	0.609	3.99E-02

2.2.3 Toxic Air Pollutants (TAPs)

Due to the use of metals, there is one TAP, Ni, which exceeds the applicable emission screening level. As a result, it was modeled to demonstrate compliance with the Acceptable Ambient Concentration for a Carcinogen (AACC). The table below identifies the pollutant and its applicability to IDAPA 58.01.01.586. Please refer to Appendix D, Ambient Air Analysis, for details.

Table 2-6 Modeled Toxic Air Pollutants

TAP	586[1]	Emission Estimate (lb/hr)	EL (lb/hr)
Nickel	586	3.30E-05	2.70E-05

1. Note that 586 is an annual lb/hr average.

3.0 REGULATORY APPLICABILITY

A review of applicable State and Federal Rules for each emissions unit is provided in Sections 3.1 and 3.2 below.

3.1 STATE REGULATORY APPLICABILITY

A review of applicable requirements of the Rules for the Control of Air Pollution in Idaho is provided in Table 3-1. Each regulation is described in the sections following the table.

Table 3-1 State Regulatory Applicability Summary

Section	Description	Regulatory Citation	Applicable?
3.1.1	Certification of Documents	IDAPA 58.01.01.123	Yes
3.1.2	Excess Emissions	IDAPA 58.01.01.130-136	Yes
3.1.3	Ambient Air Quality Standards for Specific Air Pollutants	IDAPA 58.01.01.577	Yes
3.1.4	Toxic Air Pollutants	IDAPA 58.01.01.585 and 586	Yes
3.1.5	New Source Performance Standards	IDAPA 58.01.01.590	Yes
3.1.6	National Emissions Standards for Hazardous Air Pollutants	IDAPA 58.01.01.591	Yes
3.1.7	Open Burning	IDAPA 58.01.01.600-616	Yes
3.1.8	Visible Emissions	IDAPA 58.01.01.625	Yes
3.1.9	Rules for Control of Fugitive Dust	IDAPA 58.01.01.650	Yes
3.1.10	Fuel Burning Equipment – Particulate Matter	IDAPA 58.01.01.675-681	No
3.1.11	Particulate Matter – Process Weight Limitations	IDAPA 58.01.01.701	No
3.1.12	Odors	IDAPA 58.01.01.775-776	Yes

3.1.1 Certification of Documents

IDAPA 58.01.01.123 requires that all documents, including application forms for permits to construct, records, and monitoring reports submitted to DEQ, contain a certification by a responsible official. YMC will comply with this requirement, and the appropriate certifications by a responsible official are being submitted with this application.

3.1.2 Excess Emissions

IDAPA 58.01.01.130-136 requires that any episode of excess emissions be reported to DEQ, where appropriate. YMC will abide by all excess emission requirements.

3.1.3 Ambient Air Quality Standards for Specific air Pollutants

IDAPA 58.01.01.577 establishes ambient air quality standards for specific air pollutants including $PM_{2.5/10}$, Sulfur Dioxide, Ozone, Nitrogen Oxide, Carbon Monoxide, and Lead. Facility-wide modeling was not conducted for criteria pollutants, as described in Section 2.2.2. Additionally, one screening level of toxics was exceeded. Specific details regarding the analysis and documentation of compliance is included in Appendix D of this application.

3.1.4 Toxic Air Pollutants

IDAPA 58.01.01.585 and 586 establishes requirements for compliance with toxic air pollutants. YMC evaluated all toxic pollutants associated with the increase and have demonstrated compliance with the standards, or appropriate modeling was conducted. Please refer to Appendix D of this document for details.

3.1.5 New Source Performance Standards

New Source Performance Standards (NSPS) in 40 CFR Part 60 are applicable to new, modified, or reconstructed stationary sources that meet or exceed specified applicability thresholds. There are no NSPS requirements relevant to YMC.

3.1.6 National Emission Standards for Hazardous Air Pollutants

Two sets of National Emissions Standards for Hazardous Air Pollutants (NESHAPs) may potentially apply to the YMC facility. The first NESHAP regulations were developed under the auspices of the original Clean Air Act. These standards are codified in 40 CFR Part 61, and address a limited number of pollutants and industries. The YMC facility does not fall under any of the industries or have the potential to emit any of the pollutants listed in 40 CFR Part 61, and therefore, 40 CFR Part 61 regulations do not apply to this facility.

Newer regulations are codified in 40 CFR Part 63 under the authority of the 1990 Clean Air Act Amendments (CAAA). These standards regulate HAP emissions from specific source categories. Part 63 regulations are frequently called Maximum Achievable Control Technology (MACT) standards.

YMC is not subject to subpart XXXXXX, Nine Metal Fabrication and Finishing at Area Sources, because of the Standard Industrial Classification (SIC) codes. The subpart defines a specific list of SIC codes that a facility must fall under in order to potentially be applicable. YMC uses the SIC code 3444 (Sheet metal work) and 1711 (plumbing, heating and air conditioning). Neither of these fall under any of the EPA nine source categories. Therefore, subpart XXXXXX is not applicable to YMC.

3.1.7 Open Burning

IDAPA 58.01.01.600 and 616 establishes requirements for open burning. YMC does not expect to conduct open burning at the facility; however, YMC will comply with the requirements under Section 600-616 if any allowable burning is to be conducted at the facility.

3.1.8 Visible Emissions

IDAPA 58.01.01.625 restricts discharge of air pollutants into the atmosphere which is greater than 20% opacity for a period or periods aggregating more than three (3) minutes in any sixty (60) minute period. YMC will comply with this rule by conducting monthly facility-wide inspections of potential sources of visible emissions, during daylight hours and under normal operating conditions. The inspection will consist of a see/no see evaluation for each potential source. If any visible emissions are observed YMC will take corrective action or perform a Method 9 or Method 22 opacity test in accordance with the procedures outlined in IDAPA 58.01.01.625. YMC will keep records onsite documenting the monthly visible emission inspection or Method 9/22 test conducted.

3.1.9 Rules for Control of Fugitive Dust

IDAPA 58.01.01.625 restricts discharge of air pollutants into the atmosphere which is greater than 20% opacity for a period or periods aggregating more than three (3) minutes in any sixty (60) minute period. YMC will comply with this rule by conducting monthly facility-wide inspections of potential sources of visible emissions, during daylight hours and under normal operating conditions. The inspection will consist of a see/no see evaluation for each potential source. If any visible emissions are observed, YMC will take corrective action or perform a Method 9/22 opacity test in accordance with the procedures outlined in IDAPA 58.01.01.625. YMC will keep records onsite documenting the monthly visible emission inspection and Method 9 test conducted.

IDAPA 58.01.01.650 requires that all reasonable precautions be taken to prevent the generation of fugitive dust. YMC will comply with fugitive particulate matter regulations.

3.1.10 Fuel Burning Equipment - Particulate Matter

IDAPA 58.01.01.676 restricts any fuel burning source of greater than 10 MMBtu to limit the PM released from combustion to 0.015 gr/dscf for gas fuel. However, none of YMC heaters reach above 0.150 MMBtu/hr. Therefore, the rule does not apply.

3.1.11 Particulate Matter - Process Weight Limitations

IDAPA 58.01.01.701 promulgates restrictions on PM for the entire facility based on process weight. Fuel burning equipment at the facility is not subject to this requirement. There are no applicable sources that require process weight calculations.

3.1.12 Odors

IDAPA 58.01.01.775-776 requires no emissions of odorous gases, liquids, or solids to the atmosphere in such quantities as to cause air pollution. YMC will comply with this requirement by keeping records of any odor complaints received and will take appropriate action for each complaint which has merit.

3.2 FEDERAL REGULATORY APPLICABILITY

A review of applicable Federal Rules is provided in Table 3-4. Included in Appendix B is the completed federal regulatory applicability FRA form.

Table 3-2 Federal Regulatory Applicability Summary

Section	Description	Regulatory Citation	Applicable?
3.2.1	National Ambient Air Quality Standards (NAAQS)- (dispersion modeling)	40 CFR Part 50	No
3.2.2	Title V Operating Permit	40 CFR Part 70	No
3.2.3	Air Pollutants (NESHAPs)	40 CFR Parts 61, 63	No
3.2.4	New Source Review (NSR)	40 CFR Part 52	No
3.2.5	New Source Performance Standards (NSPS)	40 CFR Part 60	No
3.2.6	Acid Rain Requirements	40 CFR Parts 72–78	No
3.2.7	Risk Management Programs For Chemical Accidental Release Prevention	40 CFR Part 68	No

3.2.1 National Ambient Air Quality Standards (NAAQS)

Primary National Ambient Air Quality Standards (NAAQS) are identified in 40 CFR Part 50 and define levels of air quality, which the United States Environmental Protection Agency (USEPA) deems necessary to protect the public health. Secondary NAAQS define levels of air quality, which the USEPA judges necessary to protect public welfare from any known, or anticipated adverse effects of a pollutant. Examples of public welfare include protecting wildlife, buildings, national monuments, vegetation, visibility, and property values from degradation due to excessive emissions of criteria pollutants.

Specific standards for the following pollutants have been promulgated by USEPA: $PM_{2.5}$, PM_{10}, SO_2, NO_x, CO, ozone, and lead. The YMC facility will emit $PM_{2.5}$, PM_{10}, SO_2, NO_x, CO, and VOCs,

a precursor to ozone. No criteria pollutants exceed BRC, thus a modeling demonstration was not required to demonstrate NAAQS compliance. Note that modeling was conducted on the state-regulated TAPs (see Appendix D).

3.2.2 Title V (Part 70) Operating Permit

Title V of the Clean Air Act (CAA) created the federal operating permit program. These permitting requirements are codified in 40 CFR Part 70. These permits are required for major sources with a PTE (considering federally enforceable limitations) greater than 100 tpy for any criteria pollutant, 25 tpy for all hazardous air pollutants (HAPs) in aggregate, or 10 tpy of any single HAP. YMC is a minor source because the potential to emit of any criteria pollutant is less than 100 tons per year, the potential to emit of all HAPs in aggregate is less than 25 tpy, and the potential to emit of any single HAP is less than 10 tpy.

3.2.3 National Emission Standards for Hazardous Air Pollutants (NESHAPs)

National Emission Standards for Hazardous Air Pollutants are discussed in Section 3.1.7 above.

3.2.4 New Source Review (NSR) Requirements

Ada County is designated as a maintenance area for PM_{10} and CO, an area of concern for $PM_{2.5}$ and in attainment for all other criteria pollutants. Therefore, the prevention of significant deterioration (PSD) regulations codified in 40 CFR Part 52 could potentially apply to the proposed facility. The PSD rule applies to: (1) a new major source that has the potential to emit 100 tons per year or more for any criteria pollutant for a facility that is one of the 28 industrial source categories listed in 40 CFR § 52.21(b)(1)(i)(a); or (2) a new major source that has the potential to emit 250 tons per year or more of a regulated pollutant if the facility is not on the list of industrial source categories; or (3) a modification to an existing major source that results in a net emission increase greater than a PSD significant emission rate as specified in 40 CFR § 52.21 (b)(23)(i); or (4) a modification to an existing minor source that is major in itself. The YMC facility does not fall under one of the 28 industrial source categories, nor will the PTE exceed 250 tpy for any regulated pollutant. Therefore, YMC is not subject to PSD regulations.

3.2.5 New Source Performance Standards (NSPS)

New Source Performance Standards are discussed in Section 3.1.6 above.

3.2.6 Acid Rain Requirements

The acid rain requirements codified in 40 CFR Parts 72-78 apply only to utilities and other facilities that combust fossil fuel and generate electricity for wholesale or retail sale. The proposed facility will not produce electrical power for sale. Therefore, the facility is not subject to the acid rain provisions and will not require an acid rain permit.

3.2.7 Risk Management Programs for Chemical Accidental Release Prevention

The facility is not subject to the Chemical Accidental Release Prevention Program and will not be required to develop a Risk Management Plan (RMP). Facilities that produce, process, store, or use any regulated toxic or flammable substance in excess of the thresholds listed in 40 CFR Part 68 must develop a RMP. The facility does not store any regulated toxic or flammable substances in excess of the applicable thresholds. A RMP is not necessary for this facility.

APPENDICES

Appendix A SITE SELECTION MAP

YMC Mechanical, Inc.
Layout
Boundary
RTU5
RTU1
UH7
UH8
WELDING
UH12
RTU2
RTU3
RTU4
UH6
UH11
UH1
UH5
UH9
LASER
PLASMA
UH2
UH3
UH4
UH10
ABRASIVE
UH13
Google earth
N
100 ft

Appendix B DEQ PTC FORMS AND CHECKLISTS

DEQ AIR QUALITY PROGRAM
1410 N. Hilton, Boise, ID 83706
For assistance, call the
Air Permit Hotline: 1-877-5PERMIT

General Information **Form GI**
Revision 7
6/29/12

Please see instructions on back page before filling out the form. All information is required. If information is missing, the application will not be processed.

Identification

1. Facility name: YMC, Inc.

2. Existing facility identification number: N/A

☐ **Check if new facility (not yet operating)**

3. Brief project description: Currently operating as a metal fabrication facility.

Facility Information

4. Primary facility permitting contact name: Jan Korvig
Contact type: Facility permitting contact
Telephone number: (208) 888-1727
E-mail: jan@ymcinc.com

5. Alternate facility permitting contact name: Rod Marcum
Alternate contact type: Responsible official
Telephone number: (208) 888-1727
E-mail: Rod@ymcinc.com

6. Mailing address where permit will be sent (street/city/county/state/zip code): 2975 East Lanark St, Meridian, ID 83642

7. Physical address of permitted facility (if different than mailing address) (street/city/county/state/zip code): Same as above

8. Is the equipment portable? ☐ **Yes*** ☒ **No** ***If yes, complete and attach PERF; see instructions.**

9. NAICS codes: **Primary NAICS**: 332322 **Secondary NAICS**: 238220

10. Brief business description and principal product produced: Cutting, welding fabricating of sheet metal

11. Identify any adjacent or contiguous facility this company owns and/or operates:

12. Specify type of application ☒ **Permit to construct (PTC); application fee of $1,000 required. See instructions.**

☐ **Tier I permit** ☐ **Tier II permit** ☐ **Tier II/Permit to construct**

For Tier I permitted facilities only: If you are applying for a PTC then you must also specify how the PTC will be incorporated into the Tier I permit.

☐ **Co-process Tier I modification and PTC** ☐ **Incorporate PTC at the time of Tier I renewal** ☐ **Administratively amend the Tier I permit to incorporate the PTC upon applicant's request (IDAPA 58.01.01.209.05.a, b, or c)**

Certification

In accordance with IDAPA 58.01.01.123 (Rules for the Control of Air Pollution in Idaho), I certify based on information and belief formed after reasonable inquiry, the statements and information in the document(s) are true, accurate, and complete.

13. Responsible official's name: Rod Marcum
Official's title: President
Official's address: 2975 East Lanark St, Meridian, ID 83642
Telephone number: (208) 888-1727
E-mail: rod@ymcinc.com
Official's signature: Rod Marcum
Date: 7-5-16

☒ **14. Check here to indicate that you want to review the draft permit before final issuance.**

DEQ AIR QUALITY PROGRAM
1410 N. Hilton, Boise, ID 83706
For assistance, call the
Air Permit Hotline – 1-877-5PERMIT

Cover Sheet for Air Permit Application – Permit to Construct **Form CSPTC**

Please see instructions on page 2 before filling out the form.

COMPANY NAME, FACILITY NAME, AND FACILITY ID NUMBER			
1. Company Name	YMC, Inc.		
2. Facility Name	YMC	3. Facility ID No.	N/A
4. Brief Project Description - One sentence or less	Initial PTC of currently operating facility that fabricates ducting for HVAC units		

PERMIT APPLICATION TYPE

5. ☐ New Source ☐ New Source at Existing Facility ☐ PTC for a Tier I Source Processed Pursuant to IDAPA 58.01.01.209.05.c
☒ Unpermitted Existing Source ☐ Facility Emissions Cap ☐ Modify Existing Source: Permit No.:____ Date Issued:____
☐ Required by Enforcement Action: Case No.:____

6. ☒ Minor PTC ☐ Major PTC

FORMS INCLUDED

Included	N/A	Forms		DEQ Verify
☒	☐	Form CSPTC – Cover Sheet		☐
☒	☐	Form GI – Facility Information		☐
☒	☐	Form EU0 – Emissions Units General		☐
☐	☒	Form EU1– Industrial Engine Information	Please specify number of EU1s attached:	☐
☐	☐	Form EU2– Nonmetallic Mineral Processing Plants	Please specify number of EU2s attached: ____	☐
☐	☒	Form EU3– Spray Paint Booth Information	Please specify number of EU3s attached:	☐
☐	☒	Form EU4– Cooling Tower Information	Please specify number of EU3s attached: ____	☐
☐	☒	Form EU5 – Boiler Information	Please specify number of EU4s attached: ____	☐
☐	☒	Form CBP– Concrete Batch Plant	Please specify number of CBPs attached: ____	☐
☐	☒	Form HMAP – Hot Mix Asphalt Plant	Please specify number of HMAPs attached: ____	☐
☐	☒	PERF – Portable Equipment Relocation Form		☐
☐	☒	Form AO – Afterburner/Oxidizer		☐
☐	☒	Form CA – Carbon Adsorber		☐
☐	☒	Form CYS – Cyclone Separator		☐
☐	☒	Form ESP – Electrostatic Precipitator		☐
☐	☒	Form BCE– Baghouses Control Equipment		☐
☐	☒	Form SCE– Scrubbers Control Equipment		☐
☐	☒	Form VSCE – Venturi Scrubber Control Equipment		☐
☐	☒	Form CAM – Compliance Assurance Monitoring		☐
☒	☐	Forms EI— Emissions Inventory		☐
☒	☐	PP – Plot Plan		☐
☒	☐	Forms MI1 – MI4 – Modeling	(Excel workbook, all 4 worksheets)	☐
☒	☐	Form FRA – Federal Regulation Applicability		☐

DEQ AIR QUALITY PROGRAM
1410 N. Hilton, Boise, ID 83706
For assistance, call the
Air Permit Hotline – 1-877-5PERMIT

Emissions Unit - General **Form EU0**
Revision 4
08/28/08

Please see instructions on page 2 before filling out the form.

IDENTIFICATION

1. Company Name:	2. Facility Name:	3. Facility ID No:
YMC, Inc.	YMC	N/A

4. Brief Project Description: HVAC ducting fabrication facility

EMISSIONS UNIT (PROCESS) IDENTIFICATION & DESCRIPTION

5.	Emissions Unit (EU) Name:	UH1 THROUGH UH6 INFRARED RADIENT TUBE HEATERS
6.	EU ID Number:	
7.	EU Type:	☐ New Source ☒ Unpermitted Existing Source ☐ Modification to a Permitted Source -- Previous Permit #: Date Issued:
8.	Manufacturer:	RENZOR, WONDAICE, LENNOX
9.	Model:	VR75, RAD100,LF24-145A-5
10..	Maximum Capacity:	0.075 - 0.144 MMBTU/HR
11.	Date of Construction:	JULY 2011
12.	Date of Modification (if any):	N/A
13.	Is this a Controlled Emission Unit?	☒ No ☐ Yes If Yes, complete the following section. If No, go to line 22.

EMISSIONS CONTROL EQUIPMENT

14. Control Equipment Name and ID:

15. Date of Installation: 16. Date of Modification (if any):

17. Manufacturer and Model Number:

18. ID(s) of Emission Unit Controlled:

19. Is operating schedule different than emission units(s) involved? ☐ Yes ☐ No

20. Does the manufacturer guarantee the control efficiency of the control equipment? ☐ Yes ☐ No (If Yes, attach and label manufacturer guarantee)

	Pollutant Controlled					
	PM	PM10	SO_2	NOx	VOC	CO
Control Efficiency						

21. If manufacturer's data is not available, attach a separate sheet of paper to provide the control equipment design specifications and performance data to support the above mentioned control efficiency.

EMISSION UNIT OPERATING SCHEDULE (hours/day, hours/year, or other)

22.	Actual Operation:	LESS THAN HALF THE YEAR
23.	Maximum Operation:	8760 HR/YR

REQUESTED LIMITS

24. Are you requesting any permit limits? ☐ Yes ☒ No (If Yes, indicate all that apply below)

- ☐ Operation Hour Limit(s):
- ☐ Production Limit(s):
- ☐ Material Usage Limit(s):
- ☐ Limits Based on Stack Testing: Please attach all relevant stack testing summary reports
- ☐ Other:

25. Rationale for Requesting the Limit(s):

DEQ AIR QUALITY PROGRAM
1410 N. Hilton, Boise, ID 83706
For assistance, call the
Air Permit Hotline – 1-877-5PERMIT

Emissions Unit - General **Form EU0**
Revision 4
08/28/08

Please see instructions on page 2 before filling out the form.

IDENTIFICATION

1. Company Name:	2. Facility Name:	3. Facility ID No:
YMC, Inc.	YMC	N/A

4. Brief Project Description: HVAC ducting fabrication facility

EMISSIONS UNIT (PROCESS) IDENTIFICATION & DESCRIPTION

5.	Emissions Unit (EU) Name:	UH7 THROUGH UH10 UNIT HEATERS
6.	EU ID Number:	
7.	EU Type:	☐ New Source ☒ Unpermitted Existing Source ☐ Modification to a Permitted Source -- Previous Permit #: Date Issued:
8.	Manufacturer:	RENZOR
9.	Model:	UDAP 150
10..	Maximum Capacity:	0.150 MMBTU/HR
11.	Date of Construction:	OCT 2009, OCT 2010, SEPT 2013
12.	Date of Modification (if any):	N/A
13.	Is this a Controlled Emission Unit?	☒ No ☐ Yes If Yes, complete the following section. If No, go to line 22.

EMISSIONS CONTROL EQUIPMENT

14. Control Equipment Name and ID:

15. Date of Installation: 16. Date of Modification (if any):

17. Manufacturer and Model Number:

18. ID(s) of Emission Unit Controlled:

19. Is operating schedule different than emission units(s) involved? ☐ Yes ☐ No

20. Does the manufacturer guarantee the control efficiency of the control equipment? ☐ Yes ☐ No (If Yes, attach and label manufacturer guarantee)

	Pollutant Controlled					
	PM	PM10	SO_2	NOx	VOC	CO
Control Efficiency						

21. If manufacturer's data is not available, attach a separate sheet of paper to provide the control equipment design specifications and performance data to support the above mentioned control efficiency.

EMISSION UNIT OPERATING SCHEDULE (hours/day, hours/year, or other)

22.	Actual Operation:	LESS THAN HALF THE YEAR
23.	Maximum Operation:	8760 HR/YR

REQUESTED LIMITS

24. Are you requesting any permit limits? ☐ Yes ☒ No (If Yes, indicate all that apply below)

- ☐ Operation Hour Limit(s):
- ☐ Production Limit(s):
- ☐ Material Usage Limit(s):
- ☐ Limits Based on Stack Testing: Please attach all relevant stack testing summary reports
- ☐ Other:

25. Rationale for Requesting the Limit(s):

DEQ AIR QUALITY PROGRAM
1410 N. Hilton, Boise, ID 83706
For assistance, call the
Air Permit Hotline – 1-877-5PERMIT

Emissions Unit - General **Form EU0**
Revision 4
08/28/08

Please see instructions on page 2 before filling out the form.

IDENTIFICATION

1. Company Name:	2. Facility Name:	3. Facility ID No:
YMC, Inc.	YMC	N/A

4. Brief Project Description: HVAC ducting fabrication facility

EMISSIONS UNIT (PROCESS) IDENTIFICATION & DESCRIPTION

5.	Emissions Unit (EU) Name:	UH11 THROUGH UH13 RADIANT HEATERS
6.	EU ID Number:	
7.	EU Type:	☐ New Source ☒ Unpermitted Existing Source ☐ Modification to a Permitted Source -- Previous Permit #: Date Issued:
8.	Manufacturer:	RENZOR
9.	Model:	X3C, X3L
10..	Maximum Capacity:	0.066 MMBTU/HR
11.	Date of Construction:	UNKNOWN
12.	Date of Modification (if any):	N/A
13.	Is this a Controlled Emission Unit?	☒ No ☐ Yes If Yes, complete the following section. If No, go to line 22.

EMISSIONS CONTROL EQUIPMENT

14. Control Equipment Name and ID:

15. Date of Installation: 16. Date of Modification (if any):

17. Manufacturer and Model Number:

18. ID(s) of Emission Unit Controlled:

19. Is operating schedule different than emission units(s) involved? ☐ Yes ☐ No

20. Does the manufacturer guarantee the control efficiency of the control equipment? ☐ Yes ☐ No (If Yes, attach and label manufacturer guarantee)

	Pollutant Controlled					
	PM	PM10	SO_2	NOx	VOC	CO
Control Efficiency						

21. If manufacturer's data is not available, attach a separate sheet of paper to provide the control equipment design specifications and performance data to support the above mentioned control efficiency.

EMISSION UNIT OPERATING SCHEDULE (hours/day, hours/year, or other)

22.	Actual Operation:	LESS THAN HALF THE YEAR
23.	Maximum Operation:	8760 HR/YR

REQUESTED LIMITS

24. Are you requesting any permit limits? ☐ Yes ☒ No (If Yes, indicate all that apply below)

- ☐ Operation Hour Limit(s):
- ☐ Production Limit(s):
- ☐ Material Usage Limit(s):
- ☐ Limits Based on Stack Testing: Please attach all relevant stack testing summary reports
- ☐ Other:

25. Rationale for Requesting the Limit(s):

DEQ AIR QUALITY PROGRAM
1410 N. Hilton, Boise, ID 83706
For assistance, call the
Air Permit Hotline – 1-877-5PERMIT

Emissions Unit - General **Form EU0**
Revision 4
08/28/08

Please see instructions on page 2 before filling out the form.

IDENTIFICATION

1. Company Name:	2. Facility Name:	3. Facility ID No:
YMC, Inc.	YMC	N/A

4. Brief Project Description:	HVAC ducting fabrication facility

EMISSIONS UNIT (PROCESS) IDENTIFICATION & DESCRIPTION

5.	Emissions Unit (EU) Name:	RTU1 THROUGH RTU5 RTU PACKAGE UNITS
6.	EU ID Number:	
7.	EU Type:	☐ New Source ☒ Unpermitted Existing Source ☐ Modification to a Permitted Source -- Previous Permit #: Date Issued:
8.	Manufacturer:	YORK, CARRIER
9.	Model:	ZF036N08, 48PDGC05
10..	Maximum Capacity:	0.1 OR 0.045 MMBTU/HR
11.	Date of Construction:	UNKNOWN
12.	Date of Modification (if any):	N/A
13.	Is this a Controlled Emission Unit?	☒ No ☐ Yes If Yes, complete the following section. If No, go to line 22.

EMISSIONS CONTROL EQUIPMENT

14. Control Equipment Name and ID:	
15. Date of Installation:	16. Date of Modification (if any):
17. Manufacturer and Model Number:	
18. ID(s) of Emission Unit Controlled:	
19. Is operating schedule different than emission units(s) involved?	☐ Yes ☐ No
20. Does the manufacturer guarantee the control efficiency of the control equipment?	☐ Yes ☐ No (If Yes, attach and label manufacturer guarantee)

	Pollutant Controlled					
	PM	PM10	SO_2	NOx	VOC	CO
Control Efficiency						

21. If manufacturer's data is not available, attach a separate sheet of paper to provide the control equipment design specifications and performance data to support the above mentioned control efficiency.

EMISSION UNIT OPERATING SCHEDULE (hours/day, hours/year, or other)

22.	Actual Operation:	LESS THAN HALF THE YEAR
23.	Maximum Operation:	8760 HR/YR

REQUESTED LIMITS

24.	Are you requesting any permit limits?	☐ Yes ☒ No (If Yes, indicate all that apply below)
	☐ Operation Hour Limit(s):	
	☐ Production Limit(s):	
	☐ Material Usage Limit(s):	
	☐ Limits Based on Stack Testing:	Please attach all relevant stack testing summary reports
	☐ Other:	
25.	Rationale for Requesting the Limit(s):	

IDAHO DEPARTMENT OF ENVIRONMENTAL QUALITY
AIR QUALITY DIVISION
1410 N. Hilton, Boise, ID 83706
For assistance, call the
Air Permit Hotline – 1-877-5PERMIT

Preapplication Meeting Information Form FRA (Federal Requirements Applicability) - Regulatory Review

In each box in the table below, CTRL+click on the blue underlined text for instructions and information.

IDENTIFICATION	
1. Company Name: YMC, Inc.	2. Facility Name: YMC
3. Brief Project Description: HVAC ducting fabrication facility	
APPLICABILITY DETERMINATION	
4. List all applicable subparts of the New Source Performance Standards (NSPS) (40 CFR part 60). List all non-applicable subparts of the NSPS which may appear to apply to the facility but do not. Examples of NSPS-affected emissions units include internal combustion engines, boilers, turbines, etc. Applicant must thoroughly review the list of affected emissions units.	List of all applicable subpart(s): List of all non-applicable subpart(s) which may appear to apply but do not: ☑ Not Applicable
5. List applicable subpart(s) of the National Emission Standards for Hazardous Air Pollutants (NESHAPs) (40 CFR part 61 and 40 CFR part 63). List all non-applicable subparts of the NESHAP which may appear to apply to the facility but do not. Examples of affected emission units include solvent cleaning operations, industrial cooling towers, paint stripping and miscellaneous surface coating. Reference EPA's webpage on NESHAPs for more information.	List of all applicable subpart(s): List of all non-applicable subpart(s) which may appear to apply but do not: XXXXXX ☑ Not Applicable
6. For each subpart identified above, conduct a complete regulatory analysis using the instructions and referencing the example on the following pages. **Note** - Regulatory reviews must be submitted with sufficient detail so that DEQ can verify applicability and document in legal terms why the regulation does or does not apply. Regulatory reviews submitted with insufficient detail will be determined incomplete.	☑ A detailed regulatory review is provided (Follow instructions and example). ☐ DEQ has already been provided a detailed regulatory review. Give a reference to the document including the date.

Appendix C EMISSION INVENTORY

							PM Emissions			PM2.5/10 Emissions						
Equipment	Volume Metal Removed by the Cut [a] (in^3/hr)	Total Weight of Metal Removed by Cut [a] (lbs/hr)	Control Method	Control Efficiency (%)[c]	Hour/ Day	Hours/ Year	Weight PM Emissions [b] (lbs/hr)	PM Hourly Emissions [b] (lb/hr)	PM Annual Emissions (tons/yr)	Weight PM2.5/10 Emissions[a] (lbs/hr)	PM2.5/10 Hourly Emissions[a] (lb/hr)	PM2.5/10 Annual Emissions (tons/yr)	Chromium (lb/hr)	Chromium (tons/yr)	Hexavalent Chromium (lb/hr)	Hexavalent Chromium (tons/yr)
Laser Cutting Machine	30.00	8.35	Robovent Plaser 3	99.9%	8	2024	1.00144	0.00100	0.00101	0.50	0.0005	0.00051	6.01E-06	6.08E-06	1.32E-09	1.34E-09
Plasma Cutting Table	24.95	7.06	Robovent Plaser 3 (to be installed)	99.9%	8	1250	0.84664	0.00085	0.00053	0.42	0.21	0.13229	5.08E-06	3.17E-06	1.12E-09	6.98E-10
Abrasive Cutting (chop saw)	24.95	7.06	None	0%	0.5	50	0.84664	0.84664	0.02117	0.42	0.21	0.00529	5.08E-03	1.27E-04	1.12E-06	2.79E-08
Total Emissions									**2.27E-02**			**1.38E-01**		**1.36E-04**		**3.00E-08**
24-hr or Annual Avg (lb/hr)													**1.10E-04**			**6.84E-09**

Calculations:

(a) Average 250"/minute Laser and 105"/min plasma and chop, width of cut 0.004" Laser, 0.1" plasma and chop, stainless steel = 0.5"; galvanized gauge 20 = 0.0396" and total weight of the metal removed by the cut = density * volume (PM10Emissions = 50% PM Emissions);

(b) Total Weight Removed by Cut X 0.12 lb/lb (PM Emission Factor for plasma/laser arc cutting 0.12 lb/lb (PM10=0.5lb/lb) Cut Source test data, Appendix B, 4-24-90, P/C report, A/N 184446)

(c) MERV 16 99.9% control per manufacturer email.

References: https://yosemite.epa.gov/r9/air/epss.nsf/6924c72e5ea10d5e882561b100685e04/a5169187cd5c065068257790005d840b/$FILE/Evaluation.pdf

Additional References: http://www.npi.gov.au/sites/www.npi.gov.au/files/resources/f5095a24-5fb6-9014-3942-fbceb1c39047/files/fstfamet.pdf

Additional References: http://www.dep.wv.gov/daq/Documents/January%202015/3149-Eval.pdf

Appendix B, 4-24-90, P/C report, A/N 184446

Chromium => 0.006 lb/lb

Hex. Chromium => 0.00022 lb/lb

Ni => 0.005 lb/lb

Mn => 0.0181 lb/lb

Fe => 0.89 lb/lb

Zn => 0.1 lb/lb

Equipment	Volume Metal Removed by the Cut [a] (in^3/hr)	Nickel (lb/hr)	Nickel (tons/yr)	Manganese (lb/hr)	Manganese (tons/yr)	Iron (lb/hr)	Iron (tons/yr)	Zinc (lb/hr)	Zinc (tons/yr)
Laser Cutting Machine	30.00	5.01E-06	5.07E-06	1.81E-05	1.83E-05	8.91E-04	9.02E-04	1.00E-04	1.01E-04
Plasma Cutting Table	24.95	4.23E-06	2.65E-06	1.53E-05	9.58E-06	7.54E-04	4.71E-04	8.47E-05	5.29E-05
Abrasive Cutting (chop saw)	24.95	4.23E-03	1.06E-04	1.53E-02	3.83E-04	7.54E-01	1.88E-02	8.47E-02	2.12E-03
Total Emissions			**1.14E-04**		**4.11E-04**		**2.02E-02**		**2.27E-03**
24-hr or Annual Avg (lb/hr)			**2.59E-05**	**0.000**				**0.00**	

Calculations:

(a) Average 250"/minute Laser and 105"/min plasma and
(b) Total Weight Removed by Cut X 0.12 lb/lb (PM Emiss
(c) MERV 16 99.9% control per manufacturer email.
References: https://yosemite.epa.gov/r9/air/epss.nsf/692
Additional References: http://www.npi.gov.au/sites/www.
Additional References: http://www.dep.wv.gov/daq/Docu
Appendix B, 4-24-90, P/C report, A/N 184446

1.16E-06
6.04E-07
2.42E-05

Chromium => 0.006 lb/lb

Hex. Chromium => 0.00022 lb/lb

Ni => 0.005 lb/lb

Mn => 0.0181 lb/lb

Fe => 0.89 lb/lb

Zn => 0.1 lb/lb

YMC

Pollutant	Flux	Gas	Units	Flux Cored Arc Daily[a), (c)] (lb/day)	Flux Cored Arc Annual[(b), (c)] (tons/yr)	Gas Metal Arc Daily[(a),(c)] (lb/day)	Gas Metal Arc Annual[(b), (c)] (tons/yr)	Totals Pollutant (tpy)	24-hr or Annual Average (lb/hr)^3
	Emission Factor								
Criteria Pollutants (1)									
$PM_{2.5}/_{10}$	12.2	5.2	lb/10^3 lb	9.52E-03	5.24E-04	5.87E-03	7.34E-04	**1.26E-03**	
Hazardous Air Pollutants (2)									
Chromium	0.02	0.01	lb/10^3 lb	1.56E-05	2.00E-06	1.12E-05	1.40E-06	**3.40E-06**	**1.12E-06**
Cobalt	0.01	0.01	lb/10^3 lb	7.80E-06	1.00E-06	1.12E-05	1.40E-06	**2.40E-06**	**7.92E-07**
Manangese	6.62	3.2	lb/10^3 lb	5.16E-03	6.62E-04	3.56E-03	4.45E-04	**1.11E-03**	**3.64E-04**
Nickel	0.04	0.01	lb/10^3 lb	3.12E-05	4.00E-06	1.12E-05	1.40E-06	**5.40E-06**	**1.23E-06**

Calculations:

(a) Daily Emissions (lb/day) = [Daily Throughput (tons/day)] x [Emission Factor (lbs/10^3 lb)] / [1,000 lbs]

(b) Annual Emissions (tons/yr) = [Annual Throughput (lb/yr) x [Emission Factor (lbs/10^3 lb)] / (2,000 lb/ton)

Daily Throughput Flux (lb/day) = 7.80 Annual Througput Flux (lb/yr) = 2,000

Daily Throughput Gas Metal (lb/day) = 11.20 Annual Througput Gas Metal (lb/yr) = 2,800

(c) All welding is controlled via a Donaldson Torit prota trunk which is a MERV 15; 90% http://www.allergyclean.com/understanding-merv-or-the-minimum-efficiency-reporting-value/

Notes:

(1) AP-42 Table 12.19-1 PM-10 Emission Factors for Welding Operations.

(2) AP-42 Table 12.19-2 HAP Emission Factors for Welding Operations.

						Emission Factors [1]								
Equipment	Abrasive (lb/hr)	Abrasive (lb/year)	Control Method	Control Efficiency (%)	Hours/ Day	Total PM (lb/1,000lb abrasive)	PM10 (lb/1,000lb abrasive)	PM2.5 (lb/1,000lb abrasive)	Total PM (lb/hr)	Total PM (tpy)	PM10 (lb/hr)	PM10 (tpy)	PM2.5 (lb/hr)	PM2.5 (tpy)
Surface Finishing Machine	62.963	2,204	ATI Wet Dust Collector	99.3%	1	0.1	0.1	0.1	4.41E-05	0.00000	4.41E-05	0.00000	4.41E-05	0.00000
Total Emissions									4.41E-05	7.71E-07	4.41E-05	7.71E-07	4.41E-05	7.71E-07

[1] Emission factor from AP-42 Section 12.5

Notes: 7.871 lb/ft^2, 40 ft^2/week, 280 ft^2/yr

Assumed highest lb/ft^2 between galvanized and stainless http://www.armstrongmetalcrafts.com/Reference/SheetMetalGaugeWeight.aspx

Assumes 5 day work week or 8ft^2 per day and hr as 1 hr/day is the usage rate

Natural Gas Heaters

		Daily	Annual	Heat Input		Emission Factors (1)(2) (lb/MMBtu)					PM2.5/10		NOx		CO		VOC		SO2	
	Equipment	Hours	Hours	(MMBTU/hr)	PM (Total)	PM10	NOx	CO	VOC	SO2	(lb/hr)	(tpy)	(lb/hr)	(tpy)	(lb/hr)	(tpy)	(lb/hr)	(tpy)	(lb/hr)	(tpy)
UH1	Infrared Radiant Tube Heater	24	8760	0.075	7.45E-03	7.45E-03	9.80E-02	8.24E-02	5.39E-03	5.88E-04	5.59E-04	2.45E-03	7.35E-03	3.22E-02	6.18E-03	2.71E-02	4.04E-04	1.77E-03	4.41E-05	1.93E-04
UH2	Infrared Radiant Tube Heater	24	8760	0.100	7.45E-03	7.45E-03	9.80E-02	8.24E-02	5.39E-03	5.88E-04	7.45E-04	3.26E-03	9.80E-03	4.29E-02	8.24E-03	3.61E-02	5.39E-04	2.36E-03	5.88E-05	2.58E-04
UH3	Unit Heater	24	8760	0.144	7.45E-03	7.45E-03	9.80E-02	8.24E-02	5.39E-03	5.88E-04	1.07E-03	4.69E-03	1.41E-02	6.17E-02	1.18E-02	5.19E-02	7.75E-04	3.40E-03	8.46E-05	3.70E-04
UH4	Infrared Radiant Tube Heater	24	8760	0.100	7.45E-03	7.45E-03	9.80E-02	8.24E-02	5.39E-03	5.88E-04	7.45E-04	3.26E-03	9.80E-03	4.29E-02	8.24E-03	3.61E-02	5.39E-04	2.36E-03	5.88E-05	2.58E-04
UH5	Infrared Radiant Tube Heater	24	8760	0.100	7.45E-03	7.45E-03	9.80E-02	8.24E-02	5.39E-03	5.88E-04	7.45E-04	3.26E-03	9.80E-03	4.29E-02	8.24E-03	3.61E-02	5.39E-04	2.36E-03	5.88E-05	2.58E-04
UH6	Infrared Radiant Tube Heater	24	8760	0.075	7.45E-03	7.45E-03	9.80E-02	8.24E-02	5.39E-03	5.88E-04	5.59E-04	2.45E-03	7.35E-03	3.22E-02	6.18E-03	2.71E-02	4.04E-04	1.77E-03	4.41E-05	1.93E-04
UH7	Unit Heater	24	8760	0.150	7.45E-03	7.45E-03	9.80E-02	8.24E-02	5.39E-03	5.88E-04	1.12E-03	4.90E-03	1.47E-02	6.44E-02	1.24E-02	5.41E-02	8.09E-04	3.54E-03	8.82E-05	3.86E-04
UH8	Unit Heater	24	8760	0.150	7.45E-03	7.45E-03	9.80E-02	8.24E-02	5.39E-03	5.88E-04	1.12E-03	4.90E-03	1.47E-02	6.44E-02	1.24E-02	5.41E-02	8.09E-04	3.54E-03	8.82E-05	3.86E-04
UH9	Unit Heater	24	8760	0.150	7.45E-03	7.45E-03	9.80E-02	8.24E-02	5.39E-03	5.88E-04	1.12E-03	4.90E-03	1.47E-02	6.44E-02	1.24E-02	5.41E-02	8.09E-04	3.54E-03	8.82E-05	3.86E-04
UH10	Unit Heater	24	8760	0.150	7.45E-03	7.45E-03	9.80E-02	8.24E-02	5.39E-03	5.88E-04	1.12E-03	4.90E-03	1.47E-02	6.44E-02	1.24E-02	5.41E-02	8.09E-04	3.54E-03	8.82E-05	3.86E-04
UH11	Radiant Heater	24	8760	0.066	7.45E-03	7.45E-03	9.80E-02	8.24E-02	5.39E-03	5.88E-04	4.92E-04	2.15E-03	6.47E-03	2.83E-02	5.44E-03	2.38E-02	3.56E-04	1.56E-03	3.88E-05	1.70E-04
UH12	Radiant Heater	24	8760	0.066	7.45E-03	7.45E-03	9.80E-02	8.24E-02	5.39E-03	5.88E-04	4.92E-04	2.15E-03	6.47E-03	2.83E-02	5.44E-03	2.38E-02	3.56E-04	1.56E-03	3.88E-05	1.70E-04
UH13	Radiant Heater	24	8760	0.066	7.45E-03	7.45E-03	9.80E-02	8.24E-02	5.39E-03	5.88E-04	4.92E-04	2.15E-03	6.47E-03	2.83E-02	5.44E-03	2.38E-02	3.56E-04	1.56E-03	3.88E-05	1.70E-04
RTU1	RTU Package Unit	24	8760	0.100	7.45E-03	7.45E-03	9.80E-02	8.24E-02	5.39E-03	5.88E-04	7.45E-04	3.26E-03	9.80E-03	4.29E-02	8.24E-03	3.61E-02	5.39E-04	2.36E-03	5.88E-05	2.58E-04
RTU2	RTU Package Unit	24	8760	0.045	7.45E-03	7.45E-03	9.80E-02	8.24E-02	5.39E-03	5.88E-04	3.38E-04	1.48E-03	4.45E-03	1.95E-02	3.74E-03	1.64E-02	2.45E-04	1.07E-03	2.67E-05	1.17E-04
RTU3	RTU Package Unit	24	8760	0.045	7.45E-03	7.45E-03	9.80E-02	8.24E-02	5.39E-03	5.88E-04	3.38E-04	1.48E-03	4.45E-03	1.95E-02	3.74E-03	1.64E-02	2.45E-04	1.07E-03	2.67E-05	1.17E-04
RTU4	RTU Package Unit	24	8760	0.045	7.45E-03	7.45E-03	9.80E-02	8.24E-02	5.39E-03	5.88E-04	3.38E-04	1.48E-03	4.45E-03	1.95E-02	3.74E-03	1.64E-02	2.45E-04	1.07E-03	2.67E-05	1.17E-04
RTU5	RTU Package Unit	24	8760	0.061	7.45E-03	7.45E-03	9.80E-02	8.24E-02	5.39E-03	5.88E-04	4.53E-04	1.98E-03	5.96E-03	2.61E-02	5.01E-03	2.19E-02	3.28E-04	1.44E-03	3.58E-05	1.57E-04
											Totals	**5.51E-02**		**7.25E-01**		**6.09E-01**		**3.99E-02**		**4.35E-03**

(1) Emission factor from AP-42 Section 1.4 Natural Gas Combustion, Table 1.4-1& 1.4-2

(2) To convert from lb/10^6 scf to lb/MMBtu, the lb/10^6 scf emission factor is divided by the average heating value of 1,020 Btu/scf.

Non Metal HAP[2]	CAS	EF (lb/MMscf)	lb/hr	PTE T/yr	Actutal T/yr
Benzene	71-43-2	2.10E-03	3.48E-06	1.52E-05	1.52E-05
Dichlorobenzene	25321-22-6	1.20E-03	1.99E-06	8.70E-06	8.70E-06
Formaldehyde	50-00-0	7.50E-02	1.24E-04	5.44E-04	5.44E-04
Hexane	110-54-3	1.80E+00	2.98E-03	1.31E-02	1.31E-02
Naphthalene	91-20-3	6.10E-04	1.01E-06	4.42E-06	4.42E-06
Toluene	108-88-3	3.40E-03	5.63E-06	2.47E-05	2.47E-05
2-Methylnapthalene[1]	91-57-6	2.40E-05	3.97E-08	1.74E-07	1.74E-07
3-Methylchloranthrene[1]	56-49-5	1.80E-06	2.98E-09	1.31E-08	1.31E-08
7,12-Dimethylbenz(a)anthracene[1]		1.60E-05	2.65E-08	1.16E-07	1.16E-07
Acenaphthene[1]	83-32-9	1.80E-06	2.98E-09	1.31E-08	1.31E-08
Acenaphthylene[1]	203-96-8	1.80E-06	2.98E-09	1.31E-08	1.31E-08
Anthracene[1]	120-12-7	2.40E-06	3.97E-09	1.74E-08	1.74E-08
Benz(a)anthracene[1]	56-55-3	1.80E-06	2.98E-09	1.31E-08	1.31E-08
Benzo(a)pyrene[1]	50-32-8	1.20E-06	1.99E-09	8.70E-09	8.70E-09
Benzo(b)fluoranthene[1]	205-99-2	1.80E-06	2.98E-09	1.31E-08	1.31E-08
Benzo(g,h,i)perylene[1]	191-24-2	1.20E-06	1.99E-09	8.70E-09	8.70E-09
Benzo(k)fluoranthene[1]	205-82-3	1.80E-06	2.98E-09	1.31E-08	1.31E-08
Chrysene[1]	218-01-9	1.80E-06	2.98E-09	1.31E-08	1.31E-08
Dibenzo(a,h)anthracene[1]	53-70-3	1.20E-06	1.99E-09	8.70E-09	8.70E-09
Dichlorobenzene[1]	25321-22-6	1.20E-03	1.99E-06	8.70E-06	8.70E-06
Fluoranthene[1]	206-44-0	3.00E-06	4.97E-09	2.18E-08	2.18E-08
Fluorene[1]	86-73-7	2.80E-06	4.64E-09	2.03E-08	2.03E-08
Indeno(1,2,3-cd)pyrene[1]	193-39-5	1.80E-06	2.98E-09	1.31E-08	1.31E-08
Phenanathrene[1]	85-01-8	1.70E-05	2.81E-08	1.23E-07	1.23E-07
Pyrene[1]	129-00-0	5.00E-06	8.28E-09	3.63E-08	3.63E-08

1. The pollutant is a HAP because it is considered a polycyclic organic matter (POM).
2. Emission factors are based on AP-42 (1998), Section 1.4, Natural Gas Combustion, Table 1.4-3.

Metal HAP[1]	CAS	EF (lb/MMscf)	lb/hr	PTE T/yr	Actual T/yr
Arsenic	7440-38-2	2.00E-04	3.31E-07	1.45E-06	1.45E-06
Beryllium	7440-41-7	1.20E-05	1.99E-08	8.70E-08	8.70E-08
Cadmium	7440-43-9	1.10E-03	1.82E-06	7.98E-06	7.98E-06
Chromium	7440-47-3	1.40E-03	2.32E-06	1.02E-05	1.02E-05
Cobalt	7440-48-4	8.40E-05	1.39E-07	6.09E-07	6.09E-07
Lead	7439-92-1	5.00E-04	8.28E-07	3.63E-06	3.63E-06
Manganese	7439-96-5	3.80E-04	6.29E-07	2.76E-06	2.76E-06
Mercury	7439-97-6	2.60E-04	4.30E-07	1.89E-06	1.89E-06
Molybdenum	7439-98-7	1.10E-03	1.82E-06	7.98E-06	7.98E-06
Nickel	7440-02-0	2.10E-03	3.48E-06	1.52E-05	1.52E-05
Selenium	7782-49-2	2.40E-05	3.97E-08	1.74E-07	1.74E-07

1. Emission factors are based on AP-42 (1998), Section 1.4, Natural Gas Combustion, Table 1.4-4.

Total HAP	**3.13E-03**	**1.37E-02**	**1.37E-02**

Idaho State TAP	CAS	585/586	EF (lb/MMscf)	Max lb/hr	PTE Max (T/yr)	Actual Max (T/yr)	24-hr or Annual Average (lb/hr)[3]
Benzene	71-43-2	586	2.10E-03	3.48E-06	1.52E-05	1.52E-05	3.48E-06
POM[1]		586	1.14E-05	1.89E-08	8.27E-08	8.27E-08	1.89E-08
2-Methylnapthalene[2]	91-57-6	586	2.40E-05	3.97E-08	1.74E-07	1.74E-07	3.97E-08
3-Methylchloranthrene	56-49-5	586	1.80E-06	2.98E-09	1.31E-08	1.31E-08	2.98E-09
Acenaphthene[2]	83-32-9	586	1.80E-06	2.98E-09	1.31E-08	1.31E-08	2.98E-09
Acenaphthylene[2]	203-96-8	586	1.80E-06	2.98E-09	1.31E-08	1.31E-08	2.98E-09
Anthracene[2]	120-12-7	586	2.40E-06	3.97E-09	1.74E-08	1.74E-08	3.97E-09
Benzo(g,h,i)perylene[2]	191-24-2	586	1.20E-06	1.99E-09	8.70E-09	8.70E-09	1.99E-09
Dichlorobenzene[2]	25321-22-6	586	1.20E-03	1.99E-06	8.70E-06	8.70E-06	1.99E-06
Fluoranthene[2]	206-44-0	586	3.00E-06	4.97E-09	2.18E-08	2.18E-08	4.97E-09
Fluorene[2]	86-73-7	586	2.80E-06	4.64E-09	2.03E-08	2.03E-08	4.64E-09
Phenanathrene[2]	85-01-8	586	1.70E-05	2.81E-08	1.23E-07	1.23E-07	2.81E-08
Pyrene[2]	129-00-0	586	5.00E-06	8.28E-09	3.63E-08	3.63E-08	8.28E-09
Formaldehyde	50-00-0	586	7.50E-02	1.24E-04	5.44E-04	5.44E-04	1.24E-04
Napthalene	91-20-3	586	6.10E-04	1.01E-06	4.42E-06	4.42E-06	1.01E-06
Arsenic	7440-38-2	586	2.00E-04	3.31E-07	1.45E-06	1.45E-06	3.31E-07
Beryllium	7440-41-7	586	1.20E-05	1.99E-08	8.70E-08	8.70E-08	1.99E-08
Cadmium	7440-43-9	586	1.10E-03	1.82E-06	7.98E-06	7.98E-06	1.82E-06
Nickel	7440-02-0	586	2.10E-03	3.48E-06	1.52E-05	1.52E-05	3.48E-06
Barium	7440-39-3	585	4.40E-03	7.28E-06	3.19E-05	3.19E-05	7.28E-06
Chromium	7440-47-3	585	1.40E-03	2.32E-06	1.02E-05	1.02E-05	2.32E-06
Cobalt	7440-48-4	585	8.40E-05	1.39E-07	6.09E-07	6.09E-07	1.39E-07
Copper	7440-50-8	585	8.50E-04	1.41E-06	6.16E-06	6.16E-06	1.41E-06
Manganese	7439-96-5	585	3.80E-04	6.29E-07	2.76E-06	2.76E-06	6.29E-07
Molybdenum	7439-98-7	585	1.10E-03	1.82E-06	7.98E-06	7.98E-06	1.82E-06
Selenium	7782-49-2	585	2.40E-05	3.97E-08	1.74E-07	1.74E-07	3.97E-08
Vanadium	7440-62-2	585	2.30E-03	3.81E-06	1.67E-05	1.67E-05	3.81E-06
Zinc	7440-66-6	585	2.90E-02	4.80E-05	2.10E-04	2.10E-04	4.80E-05
Hexane	110-54-3	585	1.80E+00	2.98E-03	1.31E-02	1.31E-02	2.98E-03
Pentane	109-66-0	585	2.60E+00	4.30E-03	1.89E-02	1.89E-02	4.30E-03
Toluene	108-88-3	585	3.40E-03	5.63E-06	2.47E-05	2.47E-05	5.63E-06
Napthalene	91-20-3	585	6.10E-04	1.01E-06	4.42E-06	4.42E-06	1.01E-06

1. POM is the combination of benzo(a)anthracene, benzo(a)pyrene, benzo(b)fluoranthene, benzo(k)fluoranthene, chrysene, dibenzo(a,h)anthracene and indeno(1,2,3-cd)pyrene and are compared against the emission level of benzo(a)pyrene

2. These pollutants are evaluated individually against the PAH emission level

3. 585 is based on 24-hr average and 586 pollutants are annual averages

			24-hr or Annual Average (lb/hr)					
Idaho State TAP	CAS	585/586	NG Heaters	Welding	Cutting	Total	EL	Modeling?
Benzene	71-43-2	586	3.48E-06			3.48E-06	8.00E-04	No
POM[1]	0	586	1.89E-08			1.89E-08	2.00E-06	No
2-Methylnapthalene[2]	91-57-6	586	3.97E-08			3.97E-08	9.10E-05	No
3-Methylchloranthrene	56-49-5	586	2.98E-09			2.98E-09	2.50E-06	No
Acenaphthene[2]	83-32-9	586	2.98E-09			2.98E-09	9.10E-05	No
Acenaphthylene[2]	203-96-8	586	2.98E-09			2.98E-09	9.10E-05	No
Anthracene[2]	120-12-7	586	3.97E-09			3.97E-09	9.10E-05	No
Benzo(g,h,i)perylene[2]	191-24-2	586	1.99E-09			1.99E-09	9.10E-05	No
Dichlorobenzene[2]	25321-22-6	586	1.99E-06			1.99E-06	9.10E-05	No
Fluoranthene[2]	206-44-0	586	4.97E-09			4.97E-09	9.10E-05	No
Fluorene[2]	86-73-7	586	4.64E-09			4.64E-09	9.10E-05	No
Phenanathrene[2]	85-01-8	586	2.81E-08			2.81E-08	9.10E-05	No
Pyrene[2]	129-00-0	586	8.28E-09			8.28E-09	9.10E-05	No
Formaldehyde	50-00-0	586	1.24E-04			1.24E-04	5.10E-04	No
Napthalene[3]	91-20-3	586	1.01E-06			1.01E-06	9.10E-05	No
Arsenic	7440-38-2	586	3.31E-07			3.31E-07	1.50E-06	No
Beryllium	7440-41-7	586	1.99E-08			1.99E-08	2.80E-05	No
Cadmium	7440-43-9	586	1.82E-06			1.82E-06	3.70E-06	No
Nickel	7440-02-0	586	3.48E-06	1.23E-06	2.59E-05	3.06E-05	2.70E-05	Yes
Barium	7440-39-3	585	7.28E-06			7.28E-06	0.033	No
Chromium	7440-47-3	585	2.32E-06	1.12E-06	1.10E-04	1.13E-04	0.033	No
Chromium VI	18540-29-9	586			6.84E-09	6.84E-09	5.60E-07	No
Cobalt	7440-48-4	585	1.39E-07	7.92E-07		9.31E-07	0.0033	No
Copper	7440-50-8	585	1.41E-06			1.41E-06	0.067	No
Manganese	7439-96-5	585	6.29E-07	3.64E-04	3.30E-04	6.95E-04	0.067	No
Molybdenum	7439-98-7	585	1.82E-06			1.82E-06	0.667	No
Selenium	7782-49-2	585	3.97E-08			3.97E-08	0.013	No
Vanadium	7440-62-2	585	3.81E-06			3.81E-06	0.003	No
Zinc	7440-66-6	585	4.80E-05		1.83E-03	1.87E-03	0.667	No
Hexane	110-54-3	585	2.98E-03			2.98E-03	12	No
Pentane	109-66-0	585	4.30E-03			4.30E-03	118	No
Toluene	108-88-3	585	5.63E-06			5.63E-06	25	No
Napthalene	91-20-3	585	1.01E-06			1.01E-06	3.33	No

1. POM is the combination of benzo(a)anthracene, benzo(a)pyrene, benzo(b)fluoranthene, benzo(k)fluoranthene, chrysene, dibenzo(a,h)anthracene and indeno(1,2,3-cd)pyrene. and are compared against the emission level of benzo(a)pyrene.

2. These pollutants are evaluated individually against the PAH emission level.

3. Naphthalene is considered both a 585 and 586 TAP. The 586 comparison threshold is the PAH EL.

GHG Emission Factors	
Natural Gas	kg/MMBtu
CO2	53.06
CH4	1
N2O	0.1

* 40 CFR part 98 Subpart C

https://www.epa.gov/sites/production/files/2015-12/documents/emission-factors_nov_2015.pdf

	GHG PTE				GHG Actuals			
	metric tons per year				metric tons per year			
	CO2	CH4	N2O	CO2e*	CO2	CH4	N2O	CO2e*
UH1	34.79	0.66	6.6E-02	71	34.79	0.66	6.6E-02	71
UH2	46.38	0.87	8.7E-02	94	46.38	0.87	8.7E-02	94
UH3	66.68	1.26	1.3E-01	136	66.68	1.26	1.3E-01	136
UH4	46.38	0.87	8.7E-02	94	46.38	0.87	8.7E-02	94
UH5	46.38	0.87	8.7E-02	94	46.38	0.87	8.7E-02	94
UH6	34.79	0.66	6.6E-02	71	34.79	0.66	6.6E-02	71
UH7	69.57	1.31	1.3E-01	141	69.57	1.31	1.3E-01	141
UH8	69.57	1.31	1.3E-01	141	69.57	1.31	1.3E-01	141
UH9	69.57	1.31	1.3E-01	141	69.57	1.31	1.3E-01	141
UH10	69.57	1.31	1.3E-01	141	69.57	1.31	1.3E-01	141
UH11	30.61	0.58	5.8E-02	62	30.61	0.58	5.8E-02	62
UH12	30.61	0.58	5.8E-02	62	30.61	0.58	5.8E-02	62
UH13	30.61	0.58	5.8E-02	62	30.61	0.58	5.8E-02	62
RTU1	46.38	0.87	8.7E-02	94	46.38	0.87	8.7E-02	94
RTU2	21.06	0.40	4.0E-02	43	21.06	0.40	4.0E-02	43
RTU3	21.06	0.40	4.0E-02	43	21.06	0.40	4.0E-02	43
RTU4	21.06	0.40	4.0E-02	43	21.06	0.40	4.0E-02	43
RTU5	28.20	0.53	5.3E-02	57	28.20	0.53	5.3E-02	57
Total	**783**	**14.8**	**1.5**	**1,592**	**783**	**14.8**	**1.5**	**1,592**

* Applies GWP values of 1, 25 and 298 as defined in Appendix C of Part 98.

Process	PM2.5	PM10	NOx	CO	VOC	SO2	GHG	HAPs
	T/yr	T/yr	T/yr	T/yr	T/yr	T/yr	mT/yr	T/yr
Cutting Emissions	1.38E-01	1.38E-01						6.61E-04
Welding	1.26E-03	1.26E-03						1.12E-03
Grinding	7.71E-07	7.71E-07						
NG Combustion	5.51E-02	5.51E-02	7.25E-01	6.09E-01	3.99E-02	4.35E-03	1,592	1.37E-02
Totals	**0.194**	**0.194**	**0.725**	**0.609**	**3.99E-02**	**4.35E-03**	**1592**	**1.55E-02**

Point Sources

Source ID	Source Description	Easting (X)	Northing (Y)	Base Elevation	Stack Height	Temperature	Exit Velocity	Stack Diameter	Nickel
		(m)	(m)	(m)	(ft)	(F)	(m/s)	(in)	lb/hr
Laser	Laser Cutting Machine	551873	4828381	801.63	28	85	5.27	17.3	1.16E-06
Plasma	Plasma Cutting Machine	551879	4828381	801.65	28	85	5.27	17.3	6.04E-07
UH1	Heater 1	551865	4828392	801.44	23	460	0.001	4	1.54E-07
UH2	Heater 2	551864	4828380	801.62	23	460	0.001	4	2.06E-07
UH3	Heater 3	551868	4828378	801.64	23	460	0.001	4	2.96E-07
UH4	Heater 4	551870	4828376	801.68	23	460	0.001	4	2.06E-07
UH5	Heater 5	551879	4828390	801.51	23	460	0.001	4	2.06E-07
UH6	Heater 6	551887	4828397	801.44	23	460	0.001	4	1.54E-07
UH7	Heater 7	551899	4828414	801.16	30	460	0.001	4	3.09E-07
UH8	Heater 8	551908	4828414	801.17	30	460	0.001	4	3.09E-07
UH9	Heater 9	551898	4828383	801.62	30	460	0.001	4	3.09E-07
UH10	Heater 10	551898	4828371	801.85	30	460	0.001	4	3.09E-07
RTU1	RTU Package Unit 1	551877	4828410	801.18	29	460	0.001	3	2.06E-07
RTU2	RTU Package Unit 2	551886	4828400	801.39	26	460	0.001	3	9.35E-08
RTU3	RTU Package Unit 3	551894	4828400	801.38	26	460	0.001	3	9.35E-08
RTU4	RTU Package Unit 4	551897	4828402	801.35	26	460	0.001	3	9.35E-08
RTU5	RTU Package Unit 5	551874	4828418	801.03	22	460	0.001	3	1.25E-07

www.engeeringtoolbox.com for gas fired heating appliance w/o fan hood
Measurements made by facility
Halfway point of 16 foot by 16 foot doors
Assumed exit velocity of 0.01 m/s or rain capped

Volume Sources

Source ID	Source Description	Easting (X)	Northing (Y)	Base Elevation	Release Height	Init. Horizontal Dimension	Initial Vert. Dimension	Nickel
		(m)	(m)	(m)	(ft)	(ft)	(ft)	lb/hr
UH11	Heater 11	551861	4828400	801.22	8	3.721	7.442	1.36E-07
UH12	Heater 12	551879	4828370	801.82	8	3.721	7.442	1.36E-07
UH13	Heater 13	551862	4828399	801.32	8	3.721	7.442	1.36E-07
Welding	Welding Sources	551910	4828410	801.22	8	3.721	7.442	1.23E-06
Abrasive	Abrasive Cutting	551879	4828370	801.82	8	3.721	7.442	2.42E-05

Modeling Results						
		Background Concentration ($\mu g/m^3$)	Modeling Impact ($\mu g/m^3$)	Increment Concentration ($\mu g/m^3$)	AACC (µg/m3)	% of Standard
Nickel	Annual	--	4.05E-03	4.05E-03	4.20E-03	96.4%

STATE OF IDAHO
DEPARTMENT OF
ENVIRONMENTAL QUALITY

Version 1, August 2010

Facility Wide Potential to Emit Emission Inventory

Application Template and Instructions

For new stationary sources provide the facility's potential to emit for all NSR Regulated Air Pollutants. The potential to emit provided here must match the emissions rates which are requested to be permitted.

For modifications to existing facilities (including the addition of new emissions units), if the existing facility classification is in question an existing facility wide potential to emit emission inventory will be required to be submitted[1]. Contact DEQ to determine if a facility wide emission inventory for the existing facility is required.

All emissions inventories must be submitted with thorough documentation. The emission inventories will be subjected to technical review. Therefore, prepare your application with sufficient documentation so that the public and DEQ can verify the validity of the emission estimates. **Applications submitted without sufficient documentation are incomplete. Follow the instructions provided on page 2; do not proceed until you have read the instructions.**

Applicants must use the Potential to Emit Summary table provided below.

Table 1. POTENTIAL TO EMIT FOR NSR REGULATED POLLUTANTS

Emissions Unit	PM_{10}[a]	$PM_{2.5}$[a]	CO[a]	NO_x[a]	SO_2[a]	VOC[a]	GHG[a]
	T/yr	T/yr	T/yr	T/yr	T/yr	T/yr	mT/yr
	Point Sources						
Cutting Emissions	1.86	1.86	--	--	--	--	--
Welding	5.41E-03	5.41E-03	--	--	--	--	--
Surface Machine	1.93E-04	1.93E-04	--	--	--	--	--
NG Heaters	5.51E-02	5.51E-02	0.609	0.725	4.35E-03	3.99E-02	1,592
Totals	**1.917**	**1.917**	**0.609**	**0.725**	**4.35E-03**	**3.99E-02**	**1,592**

a) NSR Regulated air Pollutants are defined[2] as: Particulate Matter (PM, PM-10, PM-2.5), Carbon Monoxide, Lead, Nitrogen Dioxide, Ozone (VOC), Sulfur Dioxide, CO_2e[3], Green House Gases (GHG) mass, all pollutants regulated by NSPS (40 CFR 60)(i.e. TRS, fluoride, sulfuric acid mist) & Class I & Class II Ozone Depleting Substances (40 CFR 82)(i.e. CFC, HCFC, Halon, etc.)

Applicants are encouraged to call DEQ's Air Quality Permit Hotline (1-877-573-7648) to ask questions as they prepare the application. **Emission Inventory Instructions:**

1. Use the same emission unit name throughout the application (i.e. in air pollution control equipment forms and for modeling purposes).

---

[1] The applicant must determine if the existing facility is a major facility. If the facility is an existing PSD major facility and changes are being made to the facility the major modification test must be conducted.

[2] 40 CFR 52.21(b)(50), as incorporated by reference at IDAPA 58.01.01.107.03.d

[3] Multiply each greenhouse gas (GHG) by the global warming potential (GWP) listed at 40 CFR 98, Table A- 1 of Subpart A then sum all values to determine CO_2e (GHGs are carbon dioxide, nitrous oxide, methane, hydrofluorcarbons, perfluorcarbons, sulfur hexafluoride). Be sure to show all calculations as described in the instructions.

STATE OF IDAHO
DEPARTMENT OF
ENVIRONMENTAL QUALITY

Version 1, August 2010

Toxic Air Pollutant Emissions Inventory

Application Template and Instructions

Applicants must demonstrate preconstruction compliance with toxic air pollutant (TAP) standards contained in IDAPA 58.01.01.210 (*Rules for the Control of Air Pollution in Idaho*). DEQ has developed a TAP completeness checklist in order to assist applicants. DEQ strongly recommends that applicants complete and submit this checklist as part of the application. **Applications which do not follow one of the available methods for demonstrating compliance described in the checklist will be determined incomplete or denied.** Follow this link to the checklist: Toxic Air Pollutant Application Completeness Checklist. Be sure to calculate emissions correctly for the averaging periods as described in the checklist and in the instructions on page 3.

The type of TAP emissions inventory required depends upon which method is used to demonstrate compliance (see the Toxic Air Pollutant Application Completeness Checklist). **All TAP emissions inventories must be summarized using the emissions inventory summary tables provided below** (Table 1 and Table 2).

The applicant must **document all emission calculations as described in the instructions provided on the following page. Applications without sufficient documentation are incomplete; do not proceed until you have read the instructions.**

Applicants are encouraged to call DEQ's Air Quality Permit Hotline (1-877-573-7648) to ask questions as they prepare the application.

Table 1. PRE- AND POST PROJECT NON-CARCINOGENIC TAP EMISSIONS SUMMARY
POTENTIAL TO EMIT

Non-Carcinogenic Toxic Air Pollutants (sum of all emissions)	Pre-Project 24-hour Average Emissions Rates for Units at the Facility (lb/hr)	Post Project 24-hour Average Emissions Rates for Units at the Facility (lb/hr)	Change in 24-hour Average Emissions Rates for Units at the Facility (lb/hr)	Non-Carcinogenic Screening Emission Level (lb/hr)	Exceeds Screening Level? (Y/N)
Barium	**0.00E-03**	**7.28E-06**	**7.28E-06**	**0.033**	**No**
Chromium	**0.00E-03**	**1.13E-04**	**1.13E-04**	**0.033**	**No**
Chromium VI	**0.00E-03**	**6.84E-09**	**6.84E-09**	**5.60E-07**	**No**
Cobalt	**0.00E-03**	**9.31E-07**	**9.31E-07**	**0.0033**	**No**
Copper	**0.00E-03**	**1.41E-06**	**1.41E-06**	**0.067**	**No**
Manganese	**0.00E-03**	**6.95E-04**	**6.95E-04**	**0.067**	**No**
Molybdenum	**0.00E-03**	**1.82E-06**	**1.82E-06**	**0.667**	**No**
Selenium	**0.00E-03**	**3.97E-08**	**3.97E-08**	**0.013**	**No**

Vanadium	0.00E-03	3.81E-06	3.81E-06	0.003	No
Zinc	0.00E-03	1.87E-03	1.87E-03	0.667	No
Hexane	0.00E-03	2.98E-03	2.98E-03	12	No
Pentane	0.00E-03	4.30E-03	4.30E-03	118	No
Toluene	0.00E-03	5.63E-06	5.63E-06	25	No
Napthalene	0.00E-03	1.01E-06	1.01E-06	3.33	No

Table 2. PRE- AND POST PROJECT CARCINOGENIC TAP EMISSIONS SUMMARY POTENTIAL TO EMIT

Carcinogenic Toxic Air Pollutants (sum of all emissions)	Pre-Project Annual Average Emissions Rates for Units at the Facility (lb/hr)	Post Project Annual Average Emissions Rates for Units at the Facility (lb/hr)	Change in Annual Average Emissions Rates for Units at the Facility (lb/hr)	Carcinogenic Screening Emission Level (lb/hr)	Exceeds Screening Level? (Y/N)
Benzene	0.00E-03	3.48E-06	3.48E-06	8.00E-04	No
POM[a]	0.00E-03	1.89E-08	1.89E-08	2.00E-06	No
2-Methylnapthalene	0.00E-03	3.97E-08	3.97E-08	9.10E-05	No
3-Methylchloranthrene	0.00E-03	2.98E-09	2.98E-09	2.50E-06	No
Acenaphthene	0.00E-03	2.98E-09	2.98E-09	9.10E-05	No
Acenaphthylene	0.00E-03	2.98E-09	2.98E-09	9.10E-05	No
Anthracene	0.00E-03	3.97E-09	3.97E-09	9.10E-05	No
Benzo(g,h,i)perylene	0.00E-03	1.99E-09	1.99E-09	9.10E-05	No
Dichlorobenzene	0.00E-03	1.99E-06	1.99E-06	9.10E-05	No
Fluoranthene	0.00E-03	4.97E-09	4.97E-09	9.10E-05	No
Fluorene	0.00E-03	4.64E-09	4.64E-09	9.10E-05	No
Phenanathrene	0.00E-03	2.81E-08	2.81E-08	9.10E-05	No
Pyrene	0.00E-03	8.28E-09	8.28E-09	9.10E-05	No
Formaldehyde	0.00E-03	1.24E-04	1.24E-04	5.10E-04	No
Napthalene	0.00E-03	1.01E-06	1.01E-06	9.10E-05	No
Arsenic	0.00E-03	3.31E-07	3.31E-07	1.50E-06	No
Beryllium	0.00E-03	1.99E-08	1.99E-08	2.80E-05	No
Cadmium	0.00E-03	1.82E-06	1.82E-06	3.70E-06	No
Nickel	0.00E-03	3.06E-05	3.06E-05	2.70E-05	Yes
Chromium VI	0.00E-03	6.84E-09	6.84E-09	5.60E-07	No

a) *{If you have POM include the following footnote.}* Polycyclic Organic Matter (POM) is considered as one TAP comprised of: benzo(a)anthracene, benzo(b)fluoranthene, benzo(k)fluoranthene, dibenzo(a,h)anthracene, chrysene, indeno(1,2,3-cd)pyrene, benzo(a)pyrene. The total is compared to benzo(a)pyrene.

Emission Inventory Instructions:

Appendix D AMBIENT AIR ANALYSIS

Idaho DEQ Impact Modeling Analyses Report Form

1.0 Summary

This air quality modeling protocol documents the proposed methodology used to prepare an air quality analysis in support of an Idaho Department of Environmental Quality (IDEQ) Permit to Construct (PTC) application for manufacturing of homes at the YMC Mechanical, Inc. (YMC) facility located in Meridian, ID. This is the initial permit for the facility.

All criteria pollutant emissions are Below Regulatory Concern (BRC) thresholds and are therefore not modeled as part of this permitting action. However, there is one toxic air pollutant (TAP), nickel that exceeds the screening levels outlined in IDAPA 58.01.01.585-586. As a result, nickel (Ni) was modeled and demonstrated compliance.

2.0 Project Description and Background as it relates to Modeling Analyses

There are several work processes, equipment, materials and emission controls that are involved in the fabrication shop. The primary focus is sheet metal production. This includes shearing, cutting and forming metal. The metal used is primarily galvanized and stainless steel.

Arc welding is also performed within the fabrication shop. Electrodes used include: flux core and gas metal. Another focus is metal cutting. YMC has three emission units that cut metal during the fabrication process. A Plasma cutting table, Laser cutting machine and abrasive cutting/chop saws are utilized for metal fabrication.

Several types of control devices are applied throughout the facility. HEPA carbon filters are used to control welding operations. Additionally, both the laser and plasma cutters use Robovent Plaser filtration devices. The surface finishing machine controls dust via an ATI wet dust collector. Lastly, there are several natural gas heaters that are considered radiant or unit heaters. All heaters range from 45,000 Btu/hr to150,000 Btu/hr.

2.1 General Facility/Project Descriptions

Emissions sources at the facility will include the following:

- Metal Cutters
- Welding Operations
- Surface Finishing Machine
- Natural Gas Heaters

Metal Cutting Devices

The YMC facility operates three cutting devices throughout the working day. Emissions are calculated based the total volume of metal removed by each cut. Required elements include the speed of the cut

(inches per minute), the width of each cut, the maximum size of metal being cut and the density of the material.

The total weight of metal removed by cutting is calculated by multiplying the volume by the density of the material. The specific gravity of the galvanized and stainless steel is similar (7.83 and 7.7) according to the Iowa department of Natural resources. Those values equate to a density in lb/in^3 of 0.2828 and 0.2782, respectively[1]. Similarly, the volume equals the cut speed * the kerf (width of cut) * size of material.

The Laser cutting machine's average cut speed is 250 inches per minute, with a kerf of 0.004 inches. The maximum size material is ½ inch stainless steel. The Plasma cutting table averages a speed of 105 inches/min, a kerf of 0.1 inch, and a maximum size of 20 gauge (0.0396 inches) galvanized steel. The chop saw's worst-case emissions scenario is identical to that of the plasma cutter.

According to the South Coast Air Quality District[2], PM_{10} emissions comprise 50% of total PM. In addition, the PM Emission Factor for plasma/laser arc cutting is 0.12 lb/lb. Therefore, a multiplier of 0.12 was applied to the total weight of metal removed by cut, and PM_{10} emissions were reduced by half. For conservatism, $PM_{2.5}$ was assumed equivalent to PM_{10}. As stated above, both the plasma and laser cutters both are, or will be, fitted with a RoboVent Plaser 3 filtration system. According to email correspondence with the manufacturer, these units control dust, and most metal fumes, at 99.9% down to 0.3 microns.

Welding

YMC performs some welding onsite. Gas Metal Arc Welding and flux core processes are utilized. The E-71 and ER-308 electrodes are used, and applicable AP-42 emission factors (section 12.19, Tables 1 and 2) were utilized. Total usage is not expected to exceed 7.8 lb/day flux and 11.2 lb/day gas metal. Annual usage is expected to be no greater than 2,000 lb and 2,800 lb, respectively. All welding is controlled by a Donaldson Torit Prota Trunk, which meets MERV 15 (90%) for particulate and fumes[3].

Natural Gas Heaters and Generator

YMC operates 18 natural gas heaters for comfort throughout the colder months of the year. The sizes of the units range from 0.045 to 0.15 MMBtu/hr. For maximum conservatism, it is assumed that they operate continually throughout the year. The intent with this assumption is to potentially eliminate all recordkeeping associated with these units. Emission factors from AP-42, section 1.4, were utilized to establish emission estimates.

---

[1] Iowa Department of Natural Resources, Plasma_laser cutting spreadsheet. http://www.iowadnr.gov/Environmental-Protection/Air-Quality/Emissions-Inventory/Emissions-Estimate-Tools

[2] South Coast Air District metal cutting evaluation. https://yosemite.epa.gov/r9/air/epss.nsf/6924c72e5ea10d5e882561b100685e04/a5169187cd5c065088257790005d840b/$FILE/Evaluation.pdf

[3] http://www.allergyclean.com/understanding-merv-or-the-minimum-efficiency-reporting-value/

Surface Finishing Machine

Particulate emissions derived from this process are based on the amount of abrasive used. The maximum weight of either galvanized and stainless steel was assumed (7.871lb/ft^2)[4]. Usage rates are assumed at 40 ft^2/week and 280 ft^2/yr. The lb/hr emission rate is based upon an 8ft^2 /day, five day work week and 1hr/day usage rate. Emissions are controlled by an ATI West Dust Collector with a 99.3% control efficiency rating per the manufacturer. All emission factors were derived from AP-42, section 12.5, for machine scarfing.

2.2 Location of Project

A protocol was developed by USEPA to classify an area as either rural or urban for dispersion modeling purposes. AERMOD, the EPA-approved dispersion modeling tool utilized in this analysis, includes rural and urban algorithm options. These options affect the wind speed profile, dispersion rates, and mixing-height formula used in calculating ground-level pollutant concentrations. The rural or urban classification is based on average heat flux, land use, or population density within a three-km radius from the plant site. Of these techniques, the USEPA has specified that land use is the most definitive criterion (USEPA, 1987). The urban/rural classification scheme based on land use is as follows:

> *The land use within the total area, A_0, circumscribed by a 3-km circle about the source, is classified using the meteorological land use typing scheme proposed by Auer (1978). The classification scheme requires that more than 50% of the area, A0, be from the following land use types in order to be considered urban for dispersion modeling purposes: heavy industrial (I1); light-moderate industrial (I2); commercial (C1); single-family compact residential (R2); and multi-family compact residential (R3). Otherwise, the use of rural dispersion coefficients is appropriate.*

The YMC facility is located in a light industrial area, in Meridian, ID. Although the immediate vicinity of the site is a mix of industrial and commercial usage, site and map reconnaissance showed that the area A_0 within a 3-km circle of the source is below the 50% urban land use criteria necessary for use of urban dispersion coefficients. Rural dispersion coefficients were therefore used in the air quality dispersion modeling.

Ada County is designated as a maintenance area for CO and PM_{10}, an area of concern for $PM_{2.5}$ and an attainment area for all other criteria pollutants. The facility is located at 551,879 mE and 4,828,390 mN, UTM zone 11 NAD 83. A map showing the geographical location of the facility is provided within Appendix A of the application.

2.3 Existing Permits and Modeling Analyses Performed

This is the first permitting action of the YMC facility. Therefore, no previous modeling analyses have been conducted.

[4] http://www.armstrongmetalcrafts.com/Reference/SheetMetalGaugeWeight.aspx

3.0 Modeling Analyses Applicability

The Idaho Department of Environmentally Quality (IDEQ) Air Quality Rules identify a threshold known as Below Regulatory Concern (BRC). The threshold is less than 10% of significant, as defined by section 006 of the Rules. BRC typically applies only for exception determinations, which are outlined in Sections 220-223 of IDAPA 58.01.01. However, IDEQ has instituted a policy whereby facilities can demonstrate BRC status for specific criteria pollutants and not be required to conduct an ambient air quality analysis for said pollutants.

As discussed in Section 2.2.2 of the associated application, all criteria pollutants are Below Regulatory Concern thresholds. Therefore, no criteria pollutants were modeled.

However, there is one TAP that exceeded the applicable screening level, which requires an ambient analysis for that pollutant. Dispersion modeling for Ni was completed, with results demonstrating compliance with the acceptable ambient concentration for carcinogens (AACC).

3.1 Applicable Standards

National Ambient Air Quality Standards (NAAQS), along with significant impact levels (SILs), for Criteria Pollutants are listed in Table 1.

Table 1 APPLICABLE REGULATORY LIMITS

Pollutant	Averaging Period	Significant Impact Levels[a] ($\mu g/m^3$)[b]	Regulatory Limit[c] ($\mu g/m^3$)	Modeled Design Value Used[d]
PM_{10}[e]	24-hour	5.0	150[f]	Maximum 6th highest[g]
$PM_{2.5}$[h]	24-hour	1.2	35[i]	Mean of maximum 8th highest[j]
	Annual	0.3	12[k]	Mean of maximum 1st highest[l]
Carbon monoxide (CO)	1-hour	2,000	40,000[m]	Maximum 2nd highest[n]
	8-hour	500	10,000[m]	Maximum 2nd highest[n]
Sulfur Dioxide (SO_2)	1-hour	3 ppb[o] (7.8 $\mu g/m^3$)	75 ppb[p] (196 $\mu g/m^3$)	Mean of maximum 4th highest[q]
	3-hour	25	1,300[m]	Maximum 2nd highest[n]
	24-hour	5	365[m]	Maximum 2nd highest[n]
	Annual	1.0	80[r]	Maximum 1st highest[n]
Nitrogen Dioxide (NO_2)	1-hour	4 ppb (7.5 $\mu g/m^3$)	100 ppb[s] (188 $\mu g/m^3$)	Mean of maximum 8th highest[t]
	Annual	1.0	100[r]	Maximum 1st highest[n]
Lead (Pb)	3-month[u]	NA	0.15[r]	Maximum 1st highest[n]
	Quarterly	NA	1.5[r]	Maximum 1st highest[n]
Ozone (O_3)	8-hour	40 TPY VOC[v]	70 ppb[w]	Not typically modeled

a. Idaho Air Rules Section 006 (definition for significant contribution) or as incorporated by reference as per Idaho Air Rules Section 107.03.b.
b. Micrograms/cubic meter.
c. Incorporated into Idaho Air Rules by reference, as per Idaho Air Rules Section 107.
d. The maximum 1st highest modeled value is always used for the significant impact analysis unless indicated otherwise. Modeled design values are calculated for each ambient air receptor.
e. Particulate matter with an aerodynamic diameter less than or equal to a nominal 10 micrometers.
f. Not to be exceeded more than once per year on average over 3 years.
g. Concentration at any modeled receptor when using five years of meteorological data.
h. Particulate matter with an aerodynamic diameter less than or equal to a nominal 2.5 micrometers.
i. 3-year mean of the upper 98th percentile of the annual distribution of 24-hour concentrations.
j. 5-year mean of the 8th highest modeled 24-hour concentrations at the modeled receptor for each year of meteorological data modeled. For the SIL analysis, the 5-year mean of the 1st highest modeled 24-hour impacts at the modeled receptor for each year.
k. 3-year mean of annual concentration.
l. 5-year mean of annual averages at the modeled receptor.
m. Not to be exceeded more than once per year.
n. Concentration at any modeled receptor.
o. Interim SIL established by EPA policy memorandum.
p. 3-year mean of the upper 99th percentile of the annual distribution of maximum daily 1-hour concentrations.
q. 5-year mean of the 4th highest daily 1-hour maximum modeled concentrations for each year of meteorological data modeled. For the significant impact analysis, the 5-year mean of 1st highest modeled 1-hour impacts for each year is used.
r. Not to be exceeded in any calendar year.
s. 3-year mean of the upper 98th percentile of the annual distribution of maximum daily 1-hour concentrations.
t. 5-year mean of the 8th highest daily 1-hour maximum modeled concentrations for each year of meteorological data modeled. For the significant impact analysis, the 5-year mean of maximum modeled 1-hour impacts for each year is used.
u. 3-month rolling average.
v. An annual emissions rate of 40 ton/year of VOCs is considered significant for O_3.
w. Annual 4th highest daily maximum 8-hour concentration averaged over three years.

Applicable TAP-specific increment standards are provided in Sections 585 and 586 of the Idaho Air Rules. Estimated TAP emissions, and TAP emission increases, resulting from the proposed project are provided in Table 2.

Table 2 TAP ELS AND AACS/AACCS

TAP	Non-Carcinogen or Carcinogen	Screening Emissions Level (EL)[a] (lb/hr)	AAC or AACC[b] ($\mu g/m^3$)
Nickel	Carcinogenic	2.7E-05	4.2E-03

a. ELs from Idaho Air Rules Section 585 and 586 in pounds/hour.
b. Acceptable Ambient Concentration (AAC) or Acceptable Ambient Concentration for a Carcinogen (AACC) from Idaho Air Rules Section 585 and 586, in micrograms/cubic meter or milligrams/cubic meter. Note that AACs listed in Idaho Air Rules Section 585 are expressed in units of milligrams/cubic meter rather than micrograms/cubic meter.

All TAPs identified in the emissions inventory for the project are listed in Table 2.

3.2 Criteria Pollutant Modeling Applicability

Emissions of all criteria pollutants for all averaging periods were BRC. Therefore, a criteria pollutant dispersion modeling analysis was not conducted. Please see the associated Emissions Inventory for details.

Table 3 lists the criteria pollutants and the basis for exclusion from a site-specific modeling analysis.

Table 3 MODELING APPLICABILITY		
Criteria Pollutant	**Modeled (yes/no)**	**Basis for Exclusion from Modeling**
$PM_{2.5}$ 24-hour	No	_X__BRC Exempt[a] ___Emissions Below Level I Thresholds[b] ___Emissions Below Level II Thresholds[c]
$PM_{2.5}$ annual	No	_X__BRC Exempt ___Emissions Below Level I Thresholds ___Emissions Below Level II Thresholds
PM_{10} 24-hour	No	_X__BRC Exempt ___Emissions Below Level I Thresholds ___Emissions Below Level II Thresholds
NO_2 1-hour	No	_X__BRC Exempt ___Emissions Below Level I Thresholds ___Emissions Below Level II Thresholds
NO_2 annual	No	_X__BRC Exempt ___Emissions Below Level I Thresholds ___Emissions Below Level II Thresholds
SO_2 1-hour, 3-hour	No	_X__BRC Exempt ___Emissions Below Level I Thresholds ___Emissions Below Level II Thresholds
SO_2 annual	No	_X__BRC Exempt ___Emissions Below Level I Thresholds ___Emissions Below Level II Thresholds
CO 1-hour, 8-hour	No	_X__BRC Exempt ___Emissions Below Level I Thresholds ___Emissions Below Level II Thresholds

a. If the project would have qualified for a Category I BRC permitting exemption for the criteria pollutant in question, as per Idaho Air Rules Section 221.01, except for the emissions quantities of another criteria pollutant, then a NAAQS compliance analysis is not required under Section 203.02 or 403.02 for that criteria pollutant.

b. Level I Modeling Thresholds from Table 2 in Section 3 of the DEQ Modeling Guideline. NAAQS compliance is assured through DEQ's non-site-specific modeling analyses.

c. Level II Modeling Thresholds from Table 2 in Section 3 of the DEQ Modeling Guideline. NAAQS compliance is assured through DEQ's non-site-specific modeling analyses. Level II Modeling Thresholds can only be used with prior DEQ approval.

Emissions calculations, that clearly show how the modeling applicability determination was performed, are provided in Appendix C of the application.

3.3 TAP Modeling Applicability

As stated above, one TAP, nickel, exceeded the emission screening level (EL). As such, a dispersion modeling analysis was conducted for Ni.

3.4 Modeling Protocol

A modeling protocol was not submitted, because the amount and level of effort to conduct the analysis was quite minimal and much of the assumed parameters are very conservative.

4.0 Modeled Emissions Sources

All the sources that emit Ni were modeled. All metal cutting source emissions are based on the cut speed, the type of material cut and the kerf (or width of cut). This calculates the volume of metal removed. The weight of that metal is determined by applying the density. Both the laser cutting machine and the plasma cutting table are controlled by Robovent Plaser 3 units with a 99.9% control efficiency rating for all particulates and metals (see the manufacturer's information and email within Appendix E or associated application). Cut source data from the South Coast Air Quality District provides a 0.12 lb PM/lb metal emission factor. Additionally, PM_{10} is 50% of total PM.

The Laser cutting machine has a maximum cut speed of 250 inches/minute and can cut up to 0.5 inch stainless steel sheets. Similarly, the plasma cutting table cuts at 105 inches/minute and a maximum of 20 gauge galvanized steel. The chop saws are assumed equivalent to the plasma cutter. Assumed annual usage ranges from 2,024 hours for the laser cutter, 1,250 hours for the plasma cutter and 50 hours for the chop saws.

Welding emissions are derived from the type of electrodes used. One electrode used is a flux cored arc unit, the other gas metal. 18 natural gas heating units also produce nickel via the combustion process. Those units are assumed to operate continually throughout the year.

The modeling emissions inventory and the emissions inventory presented in other parts of the permit application are consistent.

4.1 Criteria Pollutants

No criteria pollutants were modeled, as all estimated emissions were confirmed BRC.

4.1.1 Modeled Emissions Rates for Cumulative Impact Analyses

All emission rates used in the modeling analysis are equivalent to those rates identified in Appendix C of the application. The Emission Inventory also includes a "Modeling Parameters" tab that demonstrates how the modeled emission rates were calculated from data provided within the inventory.

4.2 Toxic Air Pollutants

The emissions associated with laser and plasma cutting are allocated to the applicable Robovent stack. Also, emissions from 15 of the 18 the natural gas heaters were allocated to each individual stack. The other three NG heaters were determined to be released to the interior of the shop, and then released, as

volume sources, from the nearest open door. Similarly, welding and chop saw emissions were modeled as volume sources.

Table 4 lists TAP emissions rates that were included in modeling analyses. Modeling was performed for each TAP having total project emissions exceeding the TAP-specific screening Emissions Level (EL).

TABLE 4 MODELED EMISSIONS RATES FOR TAP ANALYSES

Source ID	Source Description	TAP	Averaging Period	Emissions[a] (lb/hr)
Laser	Laser Cutting Machine	Nickel	Annual	1.16E-06
Plasma	Plasma Cutting Machine	Nickel	Annual	6.04E-07
UH1	Heater 1	Nickel	Annual	1.54E-07
UH2	Heater 2	Nickel	Annual	2.06E-07
UH3	Heater 3	Nickel	Annual	2.96E-07
UH4	Heater 4	Nickel	Annual	2.06E-07
UH5	Heater 5	Nickel	Annual	2.06E-07
UH6	Heater 6	Nickel	Annual	1.54E-07
UH7	Heater 7	Nickel	Annual	3.09E-07
UH8	Heater 8	Nickel	Annual	3.09E-07
UH9	Heater 9	Nickel	Annual	3.09E-07
UH10	Heater 10	Nickel	Annual	3.09E-07
RTU1	RTU Package Unit 1	Nickel	Annual	2.06E-07
RTU2	RTU Package Unit 2	Nickel	Annual	9.35E-08
RTU3	RTU Package Unit 3	Nickel	Annual	9.35E-08
RTU4	RTU Package Unit 4	Nickel	Annual	9.35E-08
RTU5	RTU Package Unit 5	Nickel	Annual	1.25E-07
UH11	Heater 11	Nickel	Annual	1.36E-07
UH12	Heater 12	Nickel	Annual	1.36E-07
UH13	Heater 13	Nickel	Annual	1.36E-07
Welding	Welding Sources	Nickel	Annual	1.23E-06
Abrasive	Abrasive Cutting	Nickel	Annual	2.42E-05

[a] Pounds/hour emissions rate modeled is the project-specific increase in potential/allowable emissions increase for the averaging period specified for the TAP.

Emissions rates in Table 4 are identical to those in the model input file for TAP analyses.

4.3 Emissions Release Parameters

All emission release parameters are based on ambient exhaust temperatures, manufacturer supplied data, or direct measurement data supplied by the facility. Table 5 lists stack parameters for all point sources.

Table 5 POINT SOURCE STACK PARAMETERS

Release Point	Description	UTM[a] Coordinates		Stack Height (ft)	Stack Gas Flow Temp. (F)[c]	Stack Exit Velocity (m/s)[d]	Modeled Stack Diameter (in)	Orient. Of Release[e]
		Easting-X (m)[b]	Northing-Y (m)					
Laser	Laser Cutting Machine	551873	4828381	26	85	5.27	17.3	Vertical
Plasma	Plasma Cutting Machine	551879	4828381	26	85	5.27	17.3	Vertical
UH1	Heater 1	551865	4828392	23	460	0.001	4	Rain-cap
UH2	Heater 2	551864	4828380	23	460	0.001	4	Rain-cap
UH3	Heater 3	551868	4828378	23	460	0.001	4	Rain-cap
UH4	Heater 4	551870	4828376	23	460	0.001	4	Rain-cap
UH5	Heater 5	551879	4828390	23	460	0.001	4	Rain-cap
UH6	Heater 6	551887	4828397	23	460	0.001	4	Rain-cap
UH7	Heater 7	551899	4828414	30	460	0.001	4	Rain-cap
UH8	Heater 8	551908	4828414	30	460	0.001	4	Rain-cap
UH9	Heater 9	551898	4828383	30	460	0.001	4	Rain-cap
UH10	Heater 10	551898	4828371	30	460	0.001	4	Rain-cap
RTU1	RTU Package Unit 1	551877	4828410	29	460	0.001	3	Horizontal
RTU2	RTU Package Unit 2	551886	4828400	26	460	0.001	3	Horizontal
RTU3	RTU Package Unit 3	551894	4828400	26	460	0.001	3	Horizontal
RTU4	RTU Package Unit 4	551897	4828402	26	460	0.001	3	Horizontal
RTU5	RTU Package Unit 5	551874	4828418	22	460	0.001	3	Horizontal

a. Universal Transverse Mercator.
b. Meters.
c. Fahrenheit; all are either derived from the manufacturer or measured by YMC staff
d. meters per second; assumed that all were rain capped or horizontal oriented
e. Vertical uninterrupted, rain-capped, or horizontal release.

Table 6 VOLUME SOURCE PARAMETERS

Release Point	Description	UTM[a] Coordinates		Release Height (ft)[c]	Base Elevation (m)	Horizontal Dimension (ft)[d]	Vertical Dimension (ft)[d]
		Easting-X (m)[b]	Northing-Y (m)				
UH11	Heater 11	551861	4828400	8	801.22	3.721	7.442
UH12	Heater 12	551879	4828370	8	801.82	3.721	7.442
UH13	Heater 13	551862	4828399	8	801.32	3.721	7.442
Welding	Welding sources	551910	4828410	8	801.22	3.721	7.442
Abrasive	Abrasive cutting (saw)	551879	4828370	8	801.82	3.721	7.442

a. Universal Transverse Mercator.
b. Meters.
c. Three doors at 16 by 16 feet are used by YMC. It is assumed that the mid-point of the doors equates to the release height
d. The horizontal dimension is calculated by dividing the width of the door by 2.15 and the vertical is the height divided by 4.3.

__X__The specific methods used to determine/calculate given release parameters is described in this section.

__X__The release orientation of all point source stacks (horizontal, rain-capped, or uninterrupted vertical release) has been verified and is documented in this section.

All building heights and subsequent stack heights were directly measured by YMC staff. Direct measurement of exit air flow for the laser and plasma cutters were made using an anemometer. Temperature were either measured directly or established via engineeringtoolbox.com for a gas-fired heating appliance without a draft hood.

5.0 Modeling Methodology

Table 7 summarizes the key modeling parameters used in the impact analyses.

Table 7 MODELING PARAMETERS

Parameter	Description/Values	Documentation/Addition Description
General Facility Location	Meridian, Idaho	The area is an attainment, maintenance or unclassified area for all criteria pollutants
Model	AERMOD	AERMOD with the PRIME downwash algorithm, version 15181
Meteorological Data	Boise surface data Boise upper air data	The meteorological model input files for this project were developed by IDEQ. See Section 5.2 of this memorandum for additional details of the meteorological data.
Terrain	Considered	3-dimensional receptor coordinates were obtained from USGS National Elevation Dataset (NED) files and were used to establish elevation of ground level receptors. AERMAP was used to determine each receptor elevation and hill height scale.
Building Downwash	Considered	Plume downwash was considered for the structures associated with the facility. BPIP-PRIME was used to evaluate building dimensions for consideration of downwash effects in AERMOD.
NOx Chemistry	NA	NOx modeling was not required for this project.
Receptor Grid	**Significant Impact Analyses**	
	Grid 1	10-meter spacing along the ambient air boundary
	Grid 2	10-meter spacing in a 291.2 meter (easting) by 190.5 meter (northing) grid centered on the facility
	Grid 3	25-meter spacing in a 449.3 meter (easting) by 301.3 meter (northing) grid centered on Grid 2
	Grid 4	50-meter spacing in a 700 meter (easting) by 500 meter (northing) grid centered on Grid 3
	Grid 5	100-meter spacing in a 1.3 kilometer (easting) by 1.2 kilometer (northing) grid centered on Grid 4
	Grid 6	250-meter spacing in a 2.5 kilometer (easting) by 2.5 kilometer (northing) grid centered on Grid 5
	Grid 7	500-meter spacing in a 6.0 kilometer (easting) by 6.0 kilometer (northing) grid centered on Grid 6
	Grid 8	1-kilometer spacing in a 11.0 kilometer (easting) by 11.0 kilometer (northing) grid centered on Grid 7
	NAAQS Analyses	
	Not applicable.	
	TAPs Analyses	
	List if different from grid used for Significant Impact Analyses	

5.1 Model Selection

AERMOD version 15181 was used for the modeling analyses to evaluate impacts of the YMC facility. This is the current version of the regulatory guideline model.

__X__The current versions of all models and associated programs were used in analyses, or alternate versions were specifically approved by DEQ.

____Any non-default model options used were approved by DEQ in advance.

5.2 Meteorological Data

Preprocessed AERMOD ready meteorological files were provided by Darrin Mehr of IDEQ. The data files cover the years 2008 through 2012 from the Boise Regional Airport. The data is hourly from the National Weather Service Automated Surface Observing System (ASOS). The data presented by IDEQ is model-ready, and was used without alteration or processing. These data originated from IDEQ, but has been included as part of this submittal.

__X__Meteorological data files are provided with the application.

5.3 Effects of Terrain

All source base and receptor elevations were calculated from USGS NED data obtained via the National Map Viewer website using the Bee-Line BEEST preprocessing system. A 1/3 arc second NED file was used in the analysis Input and output files from AERMAP will be included on the associated DVD.

__X__The datum of terrain data, building corner locations, emissions sources, and the ambient air boundary are specified and are consistent such that the modeled plot plan accurately represents the facility and surroundings.

5.4 Facility Layout

The image shown below identifies the general location of the YMC facility.

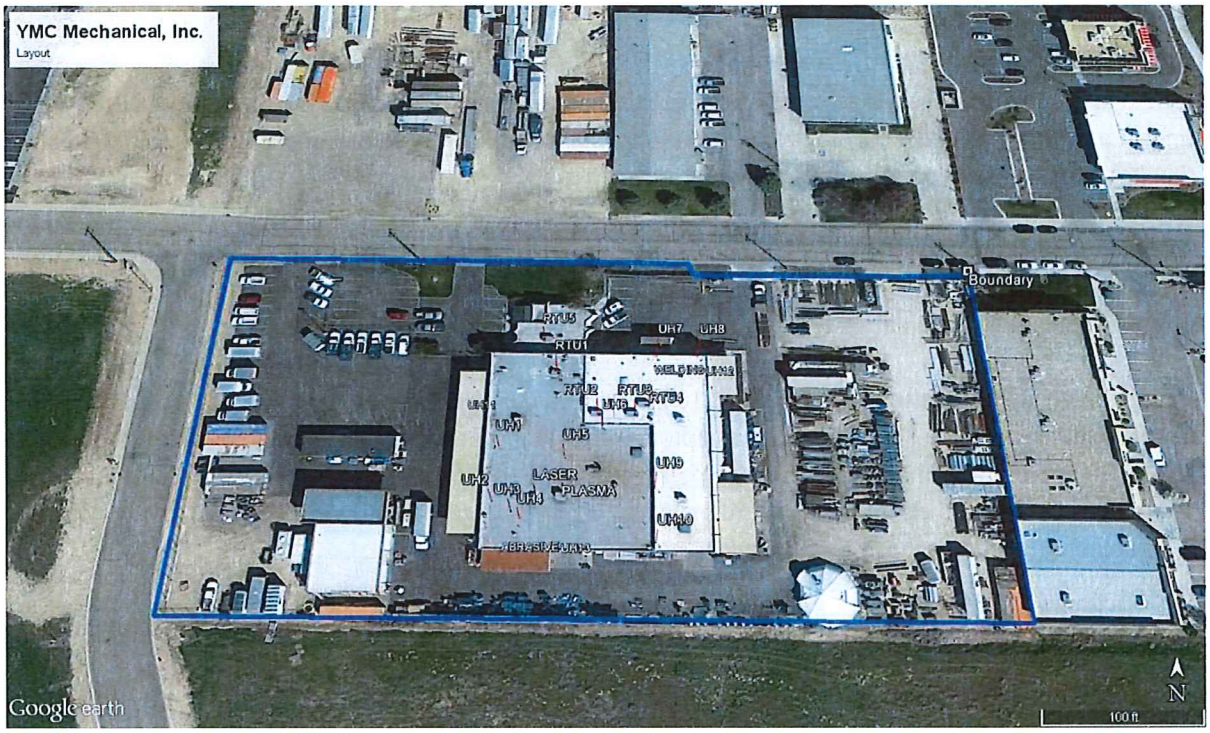

__X__The facility layout plot plan is provided in this section that clearly and accurately depicts buildings, emissions points, and the ambient air boundary.

5.5 Effects of Building Downwash

Building downwash effects were determined using the BPIP – Prime algorithm. There are two commercial buildings to the east of the property that were incorporated into the analysis. The YMC buildings include: the main shop, office and secondary portion of the shop.

5.6 Ambient Air Boundary

The ambient air boundary is defined by Lanark Street to the north, surrounding fence line along N. Olsen Ave to the west, fence line to the south and fence line to the east adjacent to the commercial properties.

__X__This section thoroughly describes how the facility can legally preclude public access (and practically preclude access) to areas excluded from ambient air in the modeling analyses.

5.7 Receptor Network

__X__This section of the Modeling Report provides justification that receptor spacing used in the air impact analyses was adequate to reasonably resolve the maximum modeled concentrations to the point that NAAQS or TAP compliance is assured.

The facility is located in a light industrial area in Meridian, ID. The property covers approximately 3.5 acres. Consistent with IDEQ guidance, the ambient air boundary used in this analysis is the fenced property boundary, which also serves as the public access boundary.

Receptor density will be set to a spacing of 10 meters along the ambient air boundary, 10 meters for the first 100 meters past the boundary, then receptors were set at a density of one per 25 meters out to 200 meters away from the ambient air boundary, 50 meters out to 400 meters from the ambient air boundary, 100 meters out to another 400 meters, 250 meter spacing for another 2 kilometers and 500 meters out to 5.0 kilometers past the ambient air boundary.

The receptor network ensures that the analysis meets or exceeds EPA receptor network requirements and captures the maximum impact from the facility. Therefore, no supplemental receptor network or expansion of the model domain is included.

5.8 Background Concentrations

Only TAPs were necessary to model. Therefore, no background values were applied.

__X__ Background concentrations have been thoroughly documented and justified for all criteria pollutants where a cumulative NAAQS impact analysis was performed.

5.9 NOx Chemistry

NO_x chemistry was not evaluated because NO2 compliance was not required for this project.

6.0 Results and Discussion

The air quality impact limits applicable to this analysis are the Idaho ambient impact limits for Toxic Air Pollutants. All TAPs that exceed the emission screening level are considered either daily non-carcinogenic or annual carcinogenic pollutants.

6.1 Criteria Pollutant Impact Results

All applicable criteria pollutants were determined to be BRC and were not evaluated against any standard.

6.1.1 Significant Impact Level Analyses

A significance analysis is not necessary for this project because facility-wide modeling has been completed for all applicable criteria pollutants.

6.1.2 Cumulative NAAQS Impact Analyses

A NAAQS analysis was not performed.

6.2 TAP Impact Analyses

Table 8 provides results for TAP impact analyses.

Table 8. RESULTS FOR TAP IMPACT ANALYSES

TAP	Averaging Period	Maximum Modeled Impact ($\mu g/m^3$)[a]	AAC or AACC ($\mu g/m^3$)
Nickel	Annual	4.04E-03	4.2E-03

[a] Micrograms/cubic meter.

7.0 Quality Assurance/Control

All modeling has been reviewed and expected to be accurate and complete. The results of all ambient modeling suggest that all emissions are compliant with applicable AAC or AACC.

Appendix E MANUFACTURER DATA

From: Rick Schmidt
To: Clark, Eric
Subject: Filter Question - Answered
Date: Tuesday, June 07, 2016 2:09:58 PM
Attachments: image678000.png
ParticleSize.pdf

Eric,

I have received your question regarding the efficiency of our filters as well as its effectiveness on fumes and particulate.

The merv 16 means that the filter is 99.9% at .3 of a micron. Fumes and smoke are particulate but on a very small scale and airborne, it usually measures between .2 and 1.5 microns the attached chart shows the common ratings of common pollutants. This means the filters we have in our equipment will be 99.9% efficient on most fumes and smoke.

Rick Schmidt
Technical Filter Specialist

317-708-0677
rick.schmidt@robovent.com
www.roboventfilter.com

7711 Indianapolis Rd., Zionsville, IN, 46077

YMC, Inc. 2975 E. Lanark St. Meridian, ID 83642

Unit No.	**RTU 1**
Location	Northside of shop (lower roof)
Type of Equipment	RTU Package Unit
Make	York
Size	3 Ton
Model No.	ZF036N08N4AAA2A
Serial No.	NC2668914
BTU	Cooling: 35,200 Heating: 100,000 80% Eff.
Filter Size	(1) 14x25x2, (2) 14x20x2
Filter Quantity	3
Belt Size	(1) A37
Stack Height	N/A
Flue Height	N/A
Distance from Edge of Building	14' from Northside

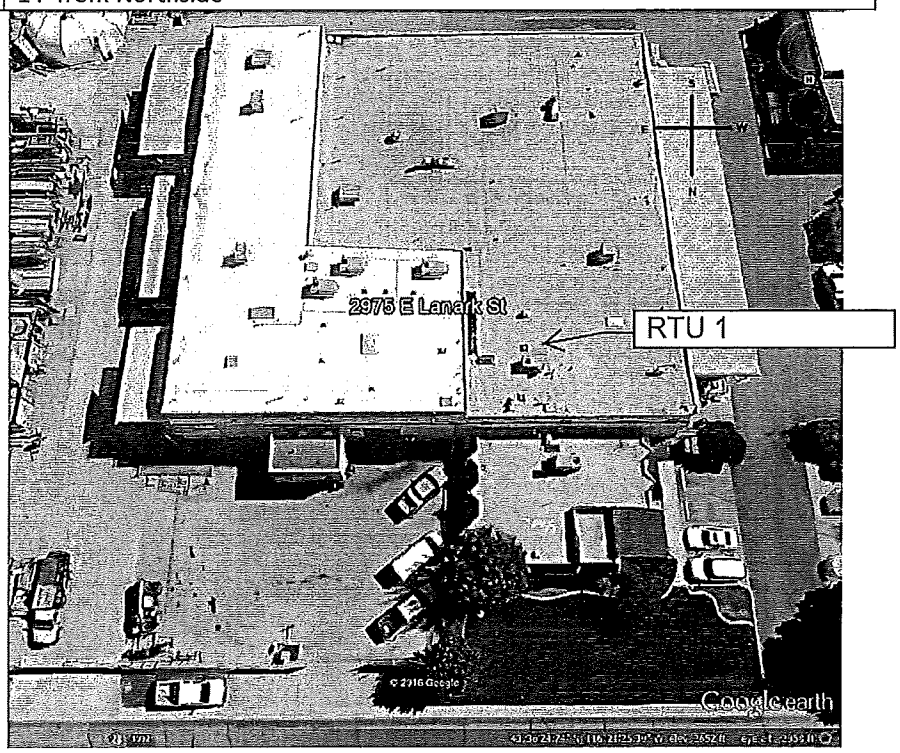

YMC, Inc. 2975 E. Lanark St. Meridian, ID 83642

Unit No.	**RTU 2**
Location	Northside of shop (upper roof)
Type of Equipment	RTU Package Unit
Make	Carrier
Size	4 Ton
Model No.	48PGDC05-A-50-A0
Serial No.	1108g10014
BTU	Input Min: 39,200, Max 56,000 Output Cap. 45,400
Filter Size	16x20x4
Filter Quantity	1
Belt Size	(1) AX48
Stack Height	N/A
Flue Height	N/A
Distance from Edge of Building	40' from Northside of shop

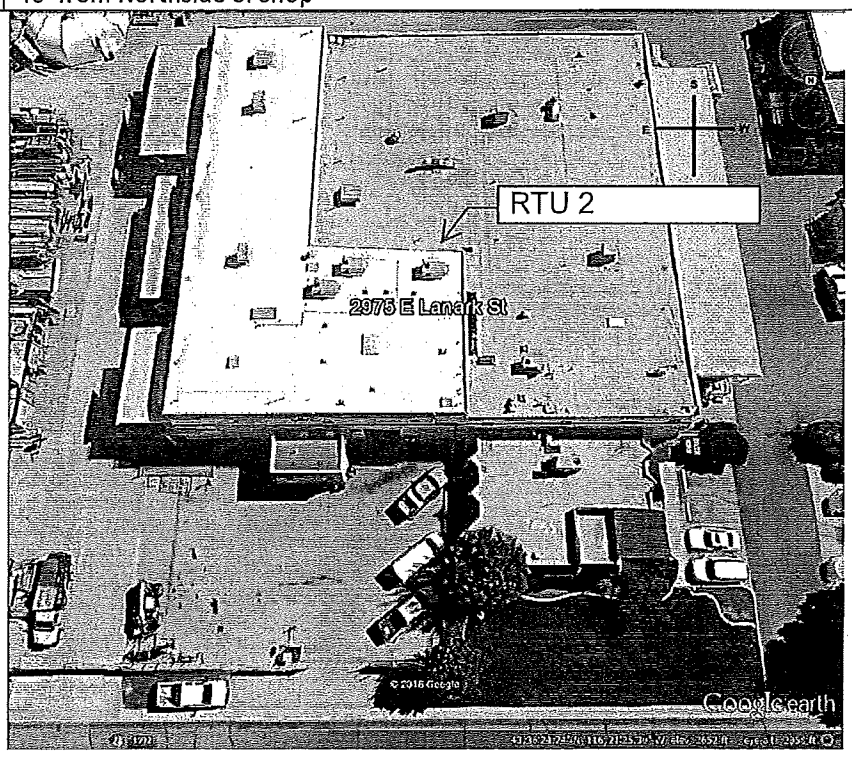

YMC, Inc. 2975 E. Lanark St. Meridian, ID 83642

Unit No.	**RTU 3**
Location	Northeast Corner of shop (upper roof)
Type of Equipment	RTU Package Unit
Make	Carrier
Size	4 Ton
Model No.	48PGDC05-A-50-A0
Serial No.	1108g100B
BTU	Input Min: 39,200, Max 56,000 Output Cap. 45,400
Filter Size	16x20x4
Filter Quantity	4
Belt Size	(1) AX48
Stack Height	N/A
Flue Height	N/A
Distance from Edge of Building	40' from Northside of shop

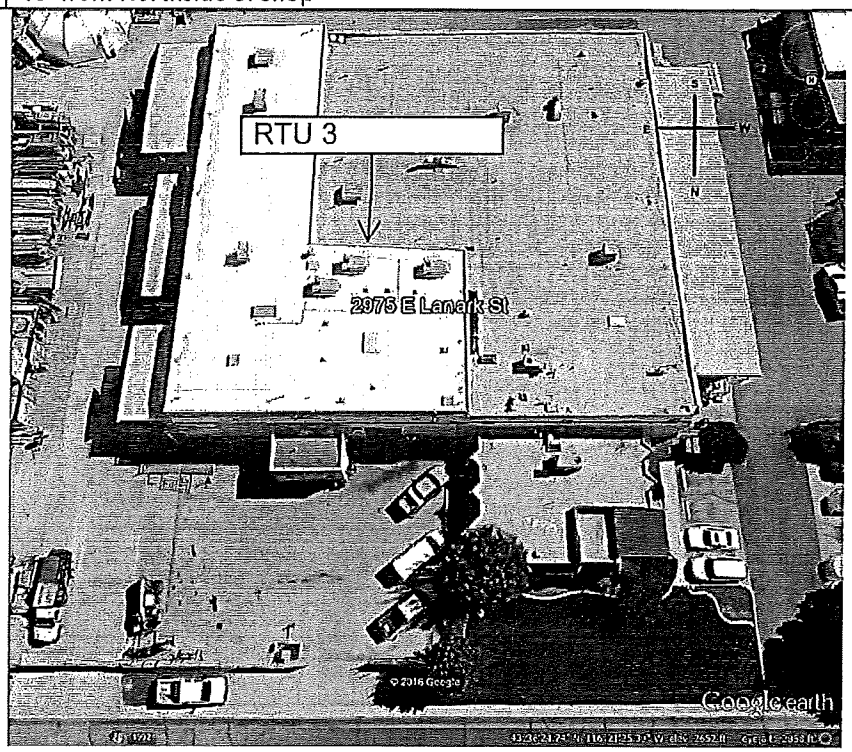

YMC, Inc. 2975 E. Lanark St. Meridian, ID 83642

Unit No.	**RTU 4**
Location	Northeast Corner of shop (upper roof)
Type of Equipment	RTU Package Unit
Make	Carrier
Size	4 Ton
Model No.	48PGDC05-A-50-A0
Serial No.	1108g10013
BTU	Input Min: 39,200, Max 56,000 Output Cap. 45,400
Filter Size	16x20x4
Filter Quantity	4
Belt Size	(1) AX48
Stack Height	N/A
Flue Height	N/A
Distance from Edge of Building	35' from North wall, 30' from East wall

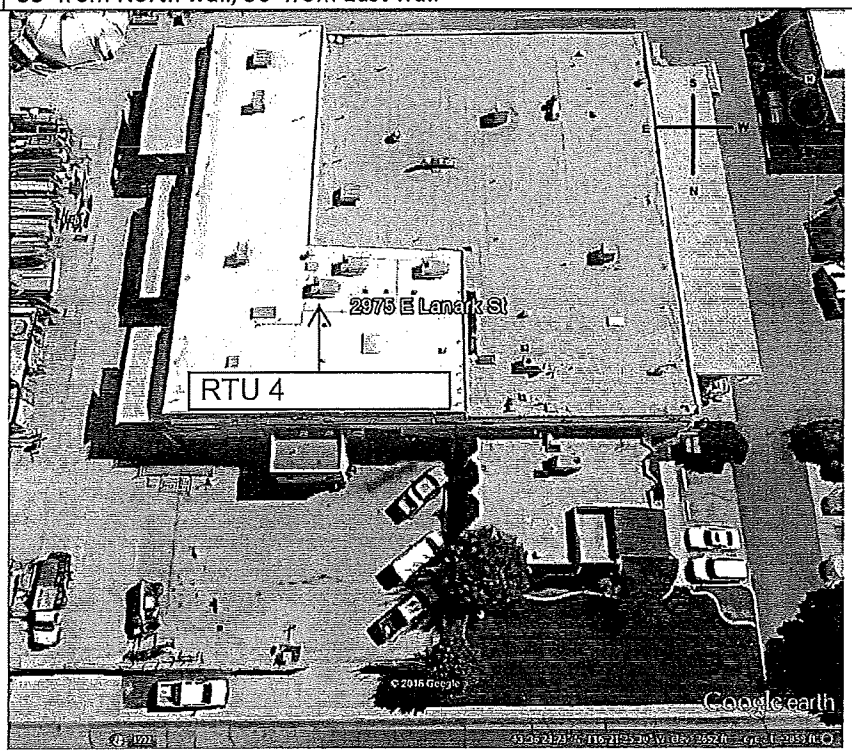

YMC, Inc. 2975 E. Lanark St. Meridian, ID 83642

Unit No.	**RTU 5**
Location	Center of main office
Type of Equipment	RTU Package Unit
Make	Carrier
Size	4 Ton
Model No.	48PSDC07-A-50-AO
Serial No.	0708G4001B
BTU/H	Input min. 52,500 max 75,000 output capacity 60,800
Filter Size	16x20x4
Filter Quantity	4
Belt Size	(1) AX48
Stack Height	N/A
Flue Height	N/A
Distance from Edge of Building	20' from West wall, 30' from North wall

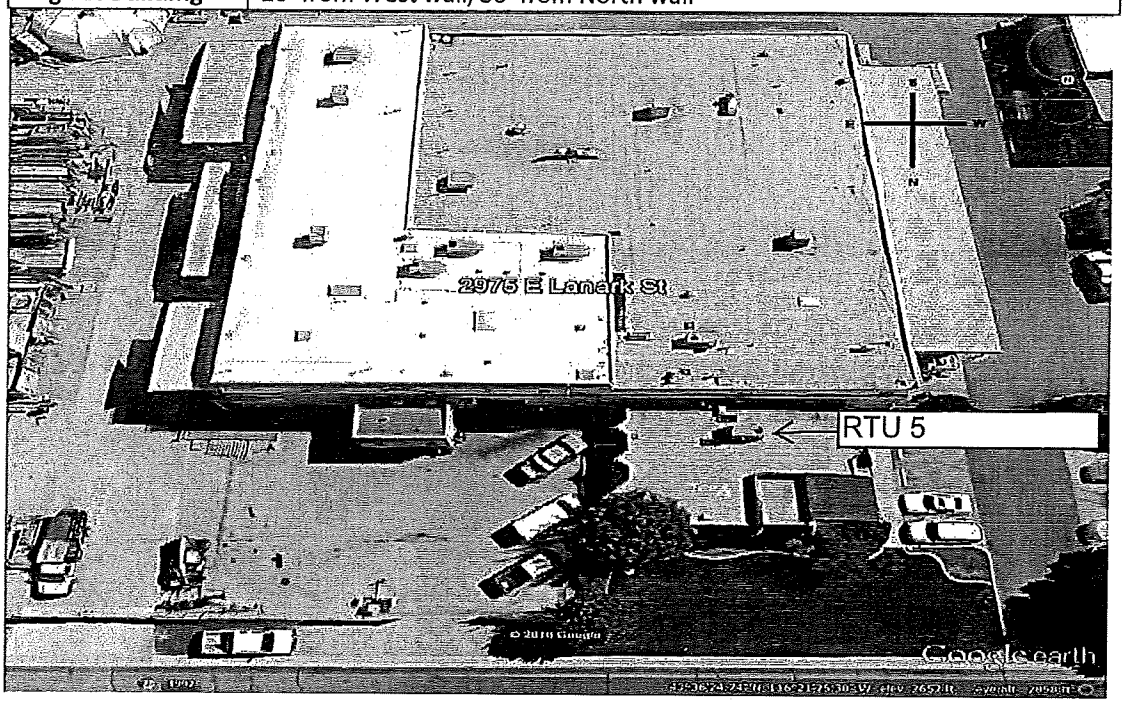

S-01-04

stelco
MATERIAL SAFETY DATA SHEET
PC7503A (REV. 00-05)

PRODUCT
GALVANIZED CARBON STEEL & GALVANIZED HSLA STEEL

Manufacturer
Stelco Inc.,
Stelco Tower
100 King Street W.,
P.O. Box 2030,
Hamilton, Ontario, Canada
L8N 3T1
Telephone (905) 527-8335 Ext. 4213..... (For updates)
Emergency (905) 527-8335 Ext. 2268

Supplier

SECTION I – MATERIAL IDENTIFICATION AND USE

Material Name
Galvanized Carbon Steel and
Galvanized High Strength Low Alloy (HSLA) Steel

WHMIS Class
D2A

Chemical Name
Not Applicable

Chemical Family
Steel

Chemical Formula
Not Applicable

Molecular Weight
Not Applicable

Trade Name and Synonyms
Not Applicable

Material Use
Production of Steel Products

SECTION II – HAZARDOUS INGREDIENTS OF MATERIAL

ELEMENT	% MAXIMUM	C.A.S. NO.	T.L.V. (A.C.G.I.H.) mg/m^3 (as fume)	P.E.L. (OSHA) mg/m^3 (as fume)	LD_{50}/LC_{50}
STEEL / GALVANIZING:					
Iron	>89	7439-89-6	5	10	30 g/kg (LD_{50} Oral Rat)
Manganese	1.81	7439-96-5	0.2	5 (C)	9 g/kg (LD_{50} Oral Rat)
Nickel	0.50	7440-02-0	1.5(I)	1	Not Available
Chromium	0.60	7440-47-3	0.5	1	Not Available
Zinc	10.0	7440-66-6	5	5	Not Available

NOTE: THE ABOVE INGREDIENT LIST IDENTIFIES THOSE COMPONENTS WHICH MEET THE REGULATED REPORTING CRITERIA. CONCENTRATIONS REPRESENT A MAXIMUM FOR ALL THE GRADES WITHIN A CATEGORY OF STEEL PRODUCTS AND MUST NOT BE INTERPRETED AS A SPECIFICATION FOR A PARTICULAR GRADE. ALL INGREDIENTS ARE PRE-REGISTERED ON THE CEPA DOMESTIC SUBSTANCES LIST. GALVANIZED STEEL WITH AN OIL COATING MEETS THE C.O.N.E.G. REQUIREMENTS.

COATING: Zinc coating may be chemically passivated with a hexavalent chromium compound (max 0.022 g/m^2 per side) or may have oil coating (max 2.2 g/m^2 per side) or mill applied lubricant (max 4.3 g/m^2 per side).

SECTION III – PHYSICAL DATA FOR STEEL

Physical State
Solid

Odour and Appearance
Silver / Grey Metallic (steel)

Odour Threshold
Not Applicable

Specific Gravity
7.6 – 7.8

Vapour Pressure (mm)
Not Applicable

Vapour Density (Air = 1)
Not Applicable

Evaporation Rate
Not Applicable

Boiling Point (°C)
Not Applicable

Freezing / Melting Point (°C)
1530°C (steel)

Solubility in Water (20°C)
Not Applicable

% Volatile (by volume)
Not Applicable

pH
Not Applicable

Coefficient of water / oil distribution
Not Applicable

SECTION IV – FIRE AND EXPLOSION HAZARD OF MATERIAL

Flammability
Not Flammable

Means of Extinction
Not Applicable

Special Procedures
Not Applicable

Flashpoint (°C) and Method
Not Applicable

Upper explosion limit (% by volume)
Not Applicable

Lower explosion limit (% by volume)
Not Applicable

Auto Ignition Temperature (°C)
Not Applicable

Hazardous Combustion Products
Not Applicable

Explosion Data – Sensitivity to Chemical Impact
Not Applicable

Rate Of Burning
Not Applicable

Sensitivity to Static Discharge
Not Applicable

REMARQUE: Cette Fiche Signalétique est également disponible en francais.
NOTE: This Material Safety Data Sheet is also available in French.

SEE REVERSE

Received
3.19.07

USS POSCO

P.O. Box 471
900 Loveridge Road
Pittsburg, CA 94565

Metallurgical Test Report and Certification

PDF PREVIOUS PAGE

Note: PDF requires Adobe Acrobat

P.O. NUMBER OG-8872 MILL ORDER NUMBER NS0851701 TALLY TF019735
VEHICLE ID UNION PACIFIC RAILROAD SHIP DATE 04-18-2016

SOLD TO: 0223579 019
O'NEAL FLAT ROLLED METALS LLC
1229 SOUTH FULTON AVE
BRIGHTON, CO 80601-0000

SHIP TO:
O'NEAL FLAT ROLLED METALS LLC
1632 WEST 2450 SOUTH
OGDEN, UT 84440-0000

PREPARED BY THE OFFICE OF:
ERIC BONAVENTURE
MANAGER QA

ON:
DATE 04-18-2016
TIME 12:40:43

PREPARED BY MANAGER OF QA
USS-POSCO INDUSTRIES

SPEC: GALVANIZED SHEETS ASTM A653-05A CS TYPE B, MIN SPANGLE, G90U, CHEM TREAT, NO OIL 1/2 STD MIN GAUGE TOLERANCE, 1/2 STANDARD FLATNESS TOLERANC

CERT: THIS IS TO CERTIFY AND GUARANTEE THAT THE MATERIAL DESCRIBED HEREIN WAS MANUFACTURED, SAMPLED, TESTED, AND/OR INSPECTED BY UPI AND MEETS THE REQUIREMENTS OF THE STATED SPECIFICATION.

MATERIAL DESCRIPTION: .0295 MIN X 48.0000

HEAT NUMBER	TEST PIECE IDENT	HRB
087093	GMKD48	58

HEAT#
087093 C=.039, MN=.195, P=.008, S=.004, SI=.003, AL=.029, NB=.001

STEEL END PRODUCTS MANUFACTURED IN THE UNITED STATES FROM UPI'S COILS WILL QUALIFY AS "DOMESTIC END PRODUCTS" UNDER THE BUY AMERICAN ACT AND "U.S.-MADE END PRODUCTS" UNDER THE TRADE AGREEMENTS ACT.

HEAT	SOURCE HEAT
087093	SP39510-2015

METALLURGICAL TEST HAS NOT BEEN REQUESTED FOR THIS ORDER ITEM

Donaldson
Torit®

EASY-TRUNK™ and PORTA-TRUNK™ FUME COLLECTORS

ULTRA-WEB®
High Efficiency **Nanofiber Filters** Built to Last

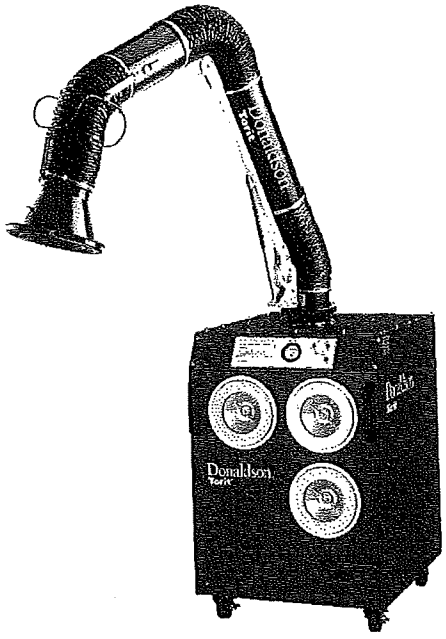

Easy-Trunk™

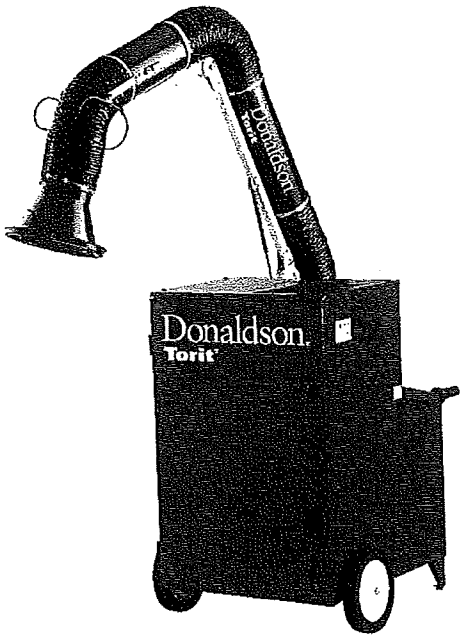

Porta-Trunk™

Compact, portable fume collectors effectively filter smoke, dust, and fumes from welding and grinding applications.

EASY-TRUNK™ COLLECTOR

- For heavier duty or more frequent plant operations
- Built-in pulse filter cleaning system
- Push buttons conveniently located on front of unit and/or on fume hood
- Ultra-Web® nanofiber filters provide high MERV* 15 filtration efficiency per ASHRAE 52.2-2007
- "Plug and go" operation
- Fits easily through standard doorway

PORTA-TRUNK™ COLLECTOR

- For light duty or infrequent plant operations
- Static (non-pulsed) filter system
- Operating controls conveniently located on fume hood
- Ultra-Web® nanofiber filters provide high MERV* 15 filtration efficiency per ASHRAE 52.2-2007
- "Plug and go" operation
- Fits easily through standard doorway

DIMENSIONS & SPECIFICATIONS

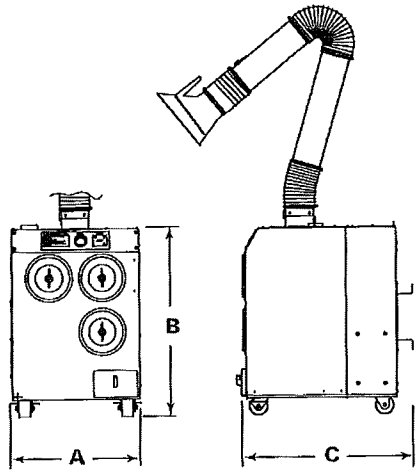

Front View Side View

Easy-Trunk

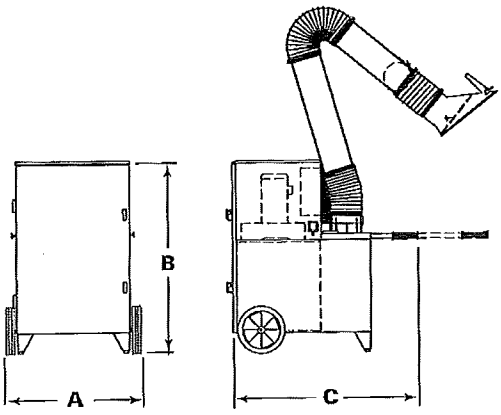

Front View Side View

Porta-Trunk

Model	Nominal Airflow** cfm	Nominal Airflow** m^3/h	Motor (hp)	Dimensions A in	A mm	B in	B mm	C in	C mm	Shipping Weight lb	Shipping Weight kg	Sound Level dB(A)†
Easy-Trunk	750	1274	1.5	28.0	711.2	40.9	1038.9	38.6	980.4	400	181.4	70
Porta-Trunk	780	1325	1.5	27.5	698.5	40.3	1023.6	35.4	899.2	340	154.2	75

STANDARD FEATURES & OPTIONS

STANDARD

Ultra-Web® FR cartridge filters

1.5 hp TEFC motor

115/60/1 voltage

Extraction arm: 6 in. x 6.5 ft. (152.4 mm x 2.0 m)

Hood-mounted light with switch

Fully assembled and wired

10-year warranty

OPTIONAL

Extraction arm: 6 in. x 10 ft. (152.4 mm x 3.0 m)

* The Minimum Efficiency Reporting Value (MERV) of this filter cartridge has been determined through independent laboratory testing using ASHRAE 52.2 (2007) test standards. The MERV rating was determined at a face velocity of 118 feet (36.0 m) per minute and loading up to four inches (101.6 millimeters) water gauge. Actual efficiency of any filter cartridge will vary according to the specific application parameters. Dust concentration, airflow, particle characteristics, and pulse cleaning methods all affect filtration efficiency.

** Based on clean filters.

† Sound level per ANSI S12.34.1988. The actual measured sound level will vary, depending on background noise and room conditions.

Significantly improve the performance of your collector with genuine Donaldson Torit replacement filters and parts. **Call Donaldson Torit today 800-365-1331.**

Donaldson FILTRATION SOLUTIONS

Tel 800-365-1331 (USA)
Tel 800-343-3639 (within Mexico)

donaldsontorit@donaldson.com
donaldsontorit.com

Donaldson Company, Inc.
Torit
P.O. Box 1299
Minneapolis, MN
55440-1299 U.S.A.

EXACTLY WHAT YOU NEED.™

Easy-Trunk Porta-Trunk Fume Collectors (04/14)
© 1995 Donaldson Co., Inc. All Rights Reserved. All products, product specifications, and data (airflow, capacity, dimensions, or availability) are subject to change without notice, and may vary by region or country. Donaldson Torit and Ultra-Web are registered trademarks of Donaldson Company, Inc. Contains Donaldson proprietary technology.

RoboVent®

Plaser 3 Series

The Leader in Clean Air. Guaranteed Solutions.

WWW.ROBOVENT.COM • 888.ROBOVENT

MODEL

MDC-4-1836

Filter Cartridges: (4) CF-14D52-ENX-SQFL

Media Area: 2,048 sq. ft.

Dimensions: See Drawing

Weight: 1,750-1,810 lbs. (depending on options)

Motor: Marathon High Efficiency 7.5HP 3600 RPM

F.L. Amps: 11.0 @ 460 Volts

Blower: Backward Inclined Airfoil

Airflow: 2500 CFM @ 10" S.P.

Compressed Air Requirements: 2.6 SCFM On-Line Pulse; 15.6 SCFM Off-Line Pulse @80PSI, Filter/Regulator Included

Door Clearance: Minimum 25"

- Ⓐ Fork Pockets
- Ⓑ Clean Air Exhaust
- Ⓒ Filter Access Door
- Ⓓ Motor
- Ⓔ Electrical Enclosure
- Ⓕ Compressed Air & Solenoid Access
- Ⓖ Compressed Air Connection 3/4" NPT
- Ⓗ Dust Tray (inside Filter Door)
- Ⓘ Blower Access (on back)

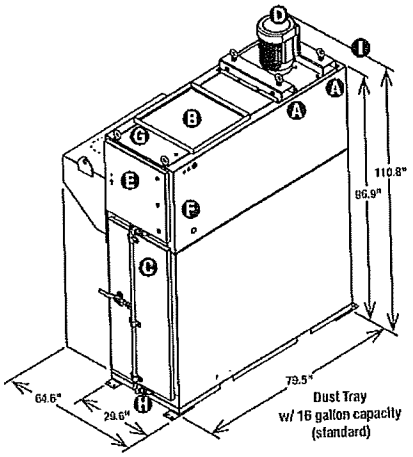

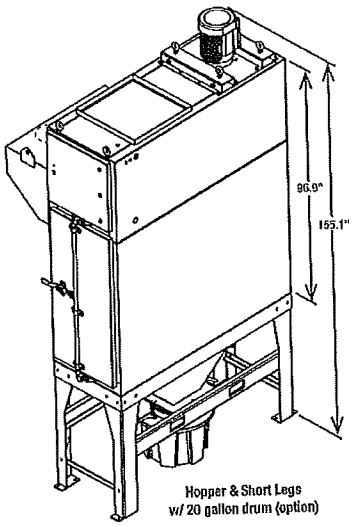

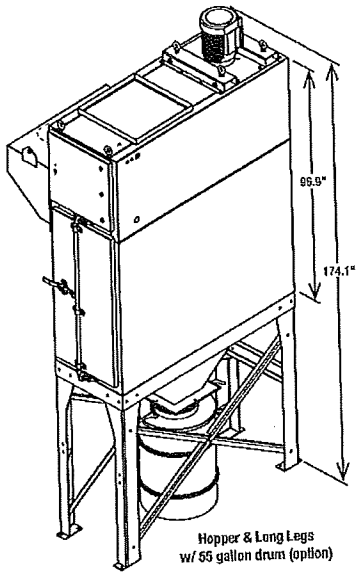

Standard Equipment:

ePad™: Advanced controls with Touch Screen HMI to control all system functions.

SafeSensor™: Particulate Monitoring Device

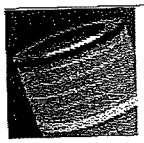

Endurex™ E16 Filters: PTFE membrane that is teflon-coated to achieve MERV16 filtration

eMaster™ Compatible

Acoustical Silencing in Motor Area

Filter Pole for Maintenance

Heavy Duty Construction: Fully welded 10 gauge steel

Dynamic Pulsing System: Patent Pending, double-pulse filter cleaning system to deliver consistent pulsing across the entire filter and superior dust release

Vertical Filter Design

SparkOut™: RoboVent's unique spark arrestor inlet (4) heavy duty baffle - FB2424

AutoSaver™: The Auto On/Off feature that reduces energy costs by running the filtration system ONLY when the cutting system is turned on

Nema 4X Super Seal Doors and Control Panel Enclosure

Motor Starter and Disconnect

Complete Packaged Product

Warranty: 15 years on the cabinet; 5 years on components (See warranty document for details)

Options:

Hopper & Short Legs w/ 20 gallon drum for easy particulate removal

Hopper & Long Legs w/ 55 gallon drum for easy particulate removal. Recommended for heavy loading applications

ePadXE™: Advanced controls with Touch Screen HMI to control all system functions. UL listed

High Performance Acoustical Silencing

Supprex-200™: A completely engineered fire suppression system activated by heat, creating a safer work environment

eDrive™: Automatically adjust the airflow via a flow monitor and VFD to extend filter life and reduce energy cost by up to 30%

WeatherWrap Packaging

Voltage Upgrades: 230 or 575 Volts

CSA Certification & UL Listed Controls

This system is covered by one or more of the following patents: #6,758,875; #4,610,704 and other patents pending. Due to continued engineering, all specifications are subject to change without notice.
©2013 RoboVent Product Group, Inc. 05/2013

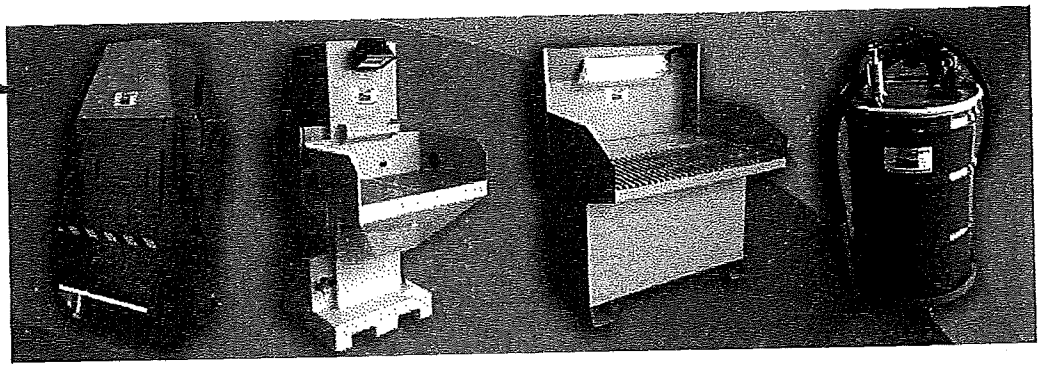

a t industrial products
909.593.8340

- Home
- Blog
- Products
  - A T I Wet Dust Collector Systems
  - Continuous Filtration System
  - Economy Downdraft Table
  - Sludge Vac
- News
- Resources
- Contact Us
- Links
  - A T Industrial Products Brochure
  - Combustible Dust Videos

- Home
- Blog
- Products
  - A T I Wet Dust Collector Systems
  - Continuous Filtration System
  - Economy Downdraft Table
  - Sludge Vac
- News
- Resources
- Contact Us
- Links
  - A T Industrial Products Brochure
  - Combustible Dust Videos

A T I Wet Dust Collector Systems

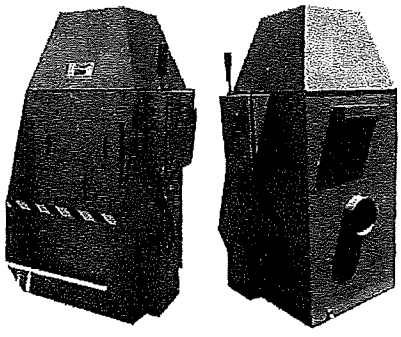

MODEL	MOTOR	CFM @ INLET	INLET DIA.
C3-800	3 HP	800	6"
C3-1200	3 HP	1200	6"
C5-1800	5 HP	1800	8"
C5-2500	5 HP	2500	8"
C7-3000	7 HP	3000	10"
C15-5000*	15 HP	5000	14"
C20-8000*	20 HP	8000	18"
C40-15000*	40 HP (Dual Motor & Impeller)	15,000	26"

Wet Dust Collector is shown with upgraded OSHA/NFPA electrical package

*Polypropylene access doors & drift eliminators standard *Polypropylene doors are 70% lighter weight1 ½" Drain

Every machine is tested and run before leaving our shop to ensure correct CFM production and water doesn't migrate up and out of the machine. Our wet dust collectors don't weep, seep or leak.

Each unit is sealed with a special sealant to further ensure no leaking

APPLICATIONS:

- ☐ Machining
- ☐ Sawing

STANDARD FEATURES

CONSTRUCTION: 304 stainless steel
COATING: Powder coated exterior surfaces; ANSI grey

- ☐ Grinding
- ☐ Polishing
- ☐ Buffing
- ☐ Sanding
- ☐ Abrasive Blasting

MAINTENANCE DOOR : Front access door with explosion relief vent
OPERATIONAL CONTROL: Manual push button starter
WATER LEVEL CONTROL: Modular tank with float level valve
ELECTRICAL: 230V-460V/60Hz/3ph; 575V available
MOTOR: TEFC
IMPELLER: Standard, precision balanced, direct coupled to the motor for maximum CFM with minimum vibration (also stainless steel)
IMPELLER: Precision balanced stainless steel
BLOWER ASSEMBLY: Plug
SOUND SUPPRESSION: Hinged/latched blower hood with sound suppression panels
DRAIN: 1.5" NPT
CLEANING TOOL: Stainless steel sludge rake; provided for the removal of sludge from the sump.

New Location:
3633 Pomona Blvd. Pomona CA 91768

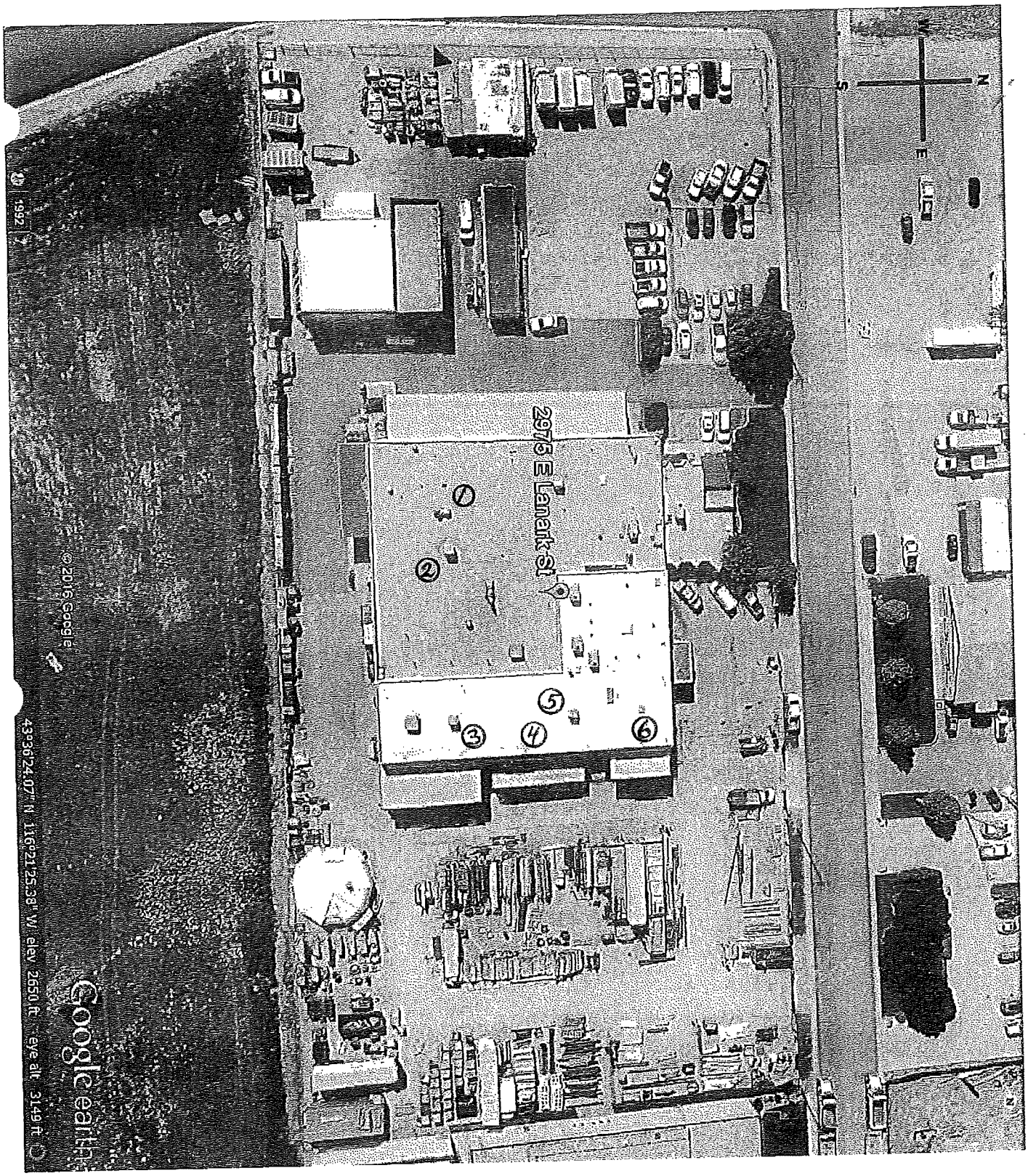

1. LASER CUTTING MACHINE
2. PLASMA CUTTING TABLE
3. SURFACE FINISHING MACHINE
4. WELDER
5. WELDER
6. WELDER

YMC, Inc. 2975 E. Lanark St. Meridian, ID 83642

Unit No.	**UH 1** MFG DATE JULY 2011
Location	NW CORNER OF SHOP
Type of Equipment	INFRARED RADIANT TUBE HEATER
Make	REZNOR
Size	115V 1PH 60HZ
Model No.	VR75
Serial No.	BKG80U2N09753K
BTU	75,000
Filter Size	NA
Filter Quantity	NA
Belt Size	NA
Stack Height	NA
Flue Height	1' OUT OF ROOF 4" ROUND
Distance from Edge of Building	NA

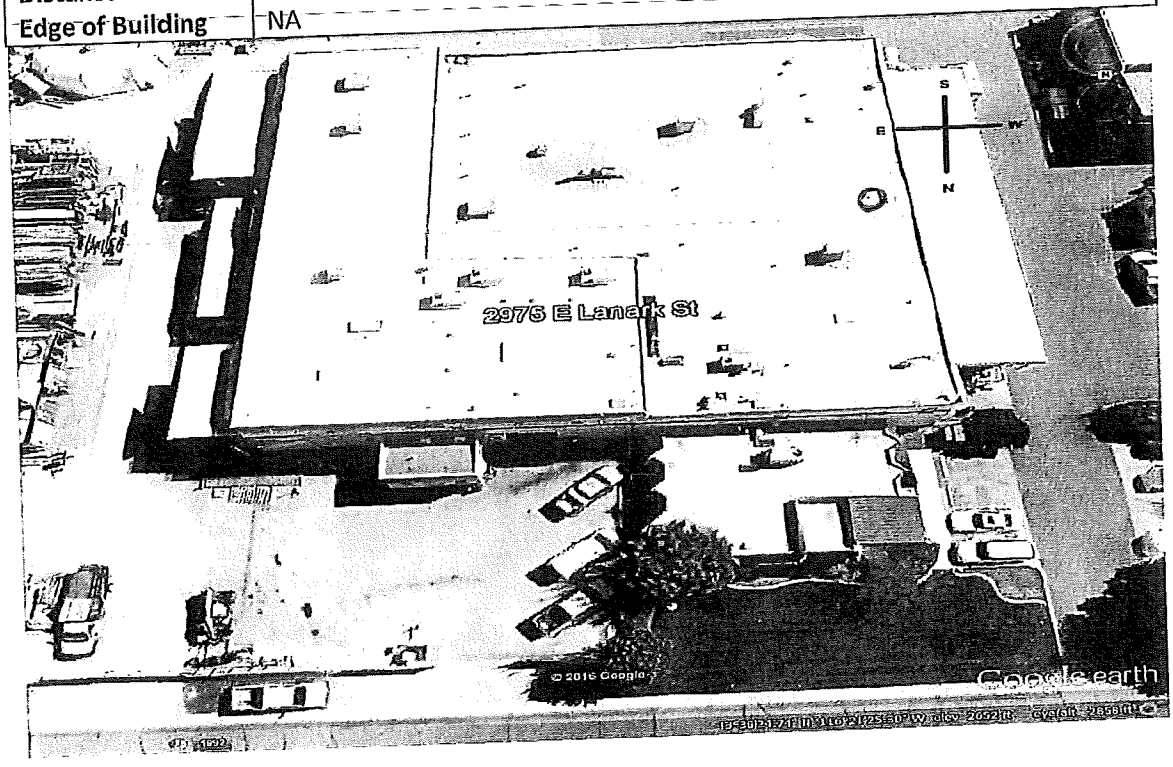

YMC, Inc. 2975 E. Lanark St. Meridian, ID 83642

Unit No.	**UH 2**
Location	CENTER OF THE WEST WALL INSIDE THE SHOP
Type of Equipment	INFRARED RADIANT TUBE HEATER
Make	WONDAICE
Size	115V 60HZ 12 AMPS MAX
Model No.	RAD100 (11)
Serial No.	G11570
BTU	100,000
Filter Size	NA
Filter Quantity	NA
Belt Size	NA
Stack Height	NA
Flue Height	1' OUT OF ROOF 4" ROUND
Distance from Edge of Building	NA

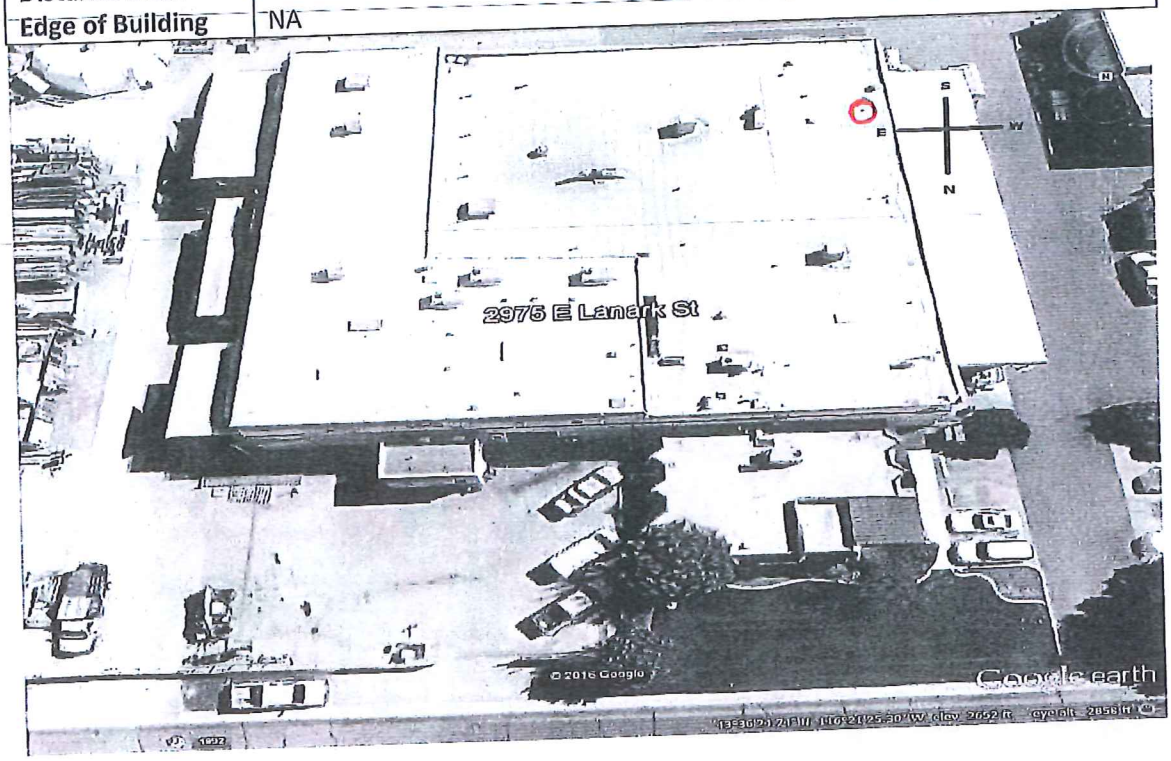

YMC, Inc. 2975 E. Lanark St. Meridian, ID 83642

Unit No.	**UH 3**
Location	SW CORNER OF SHOP, CHOPSAW/SMALL WELDING ROOM
Type of Equipment	UNIT HEATER
Make	LENNOX
Size	120V, 60HZ 1PH MAX AMPS 6
Model No.	LF24-145A-5
Serial No.	5607A09036
BTU	INPUT 143,750 OUTPUT 115,000
Filter Size	NA
Filter Quantity	NA
Belt Size	NA
Stack Height	NA
Flue Height	1' OUT OF ROOF 4" ROUND
Distance from Edge of Building	NA

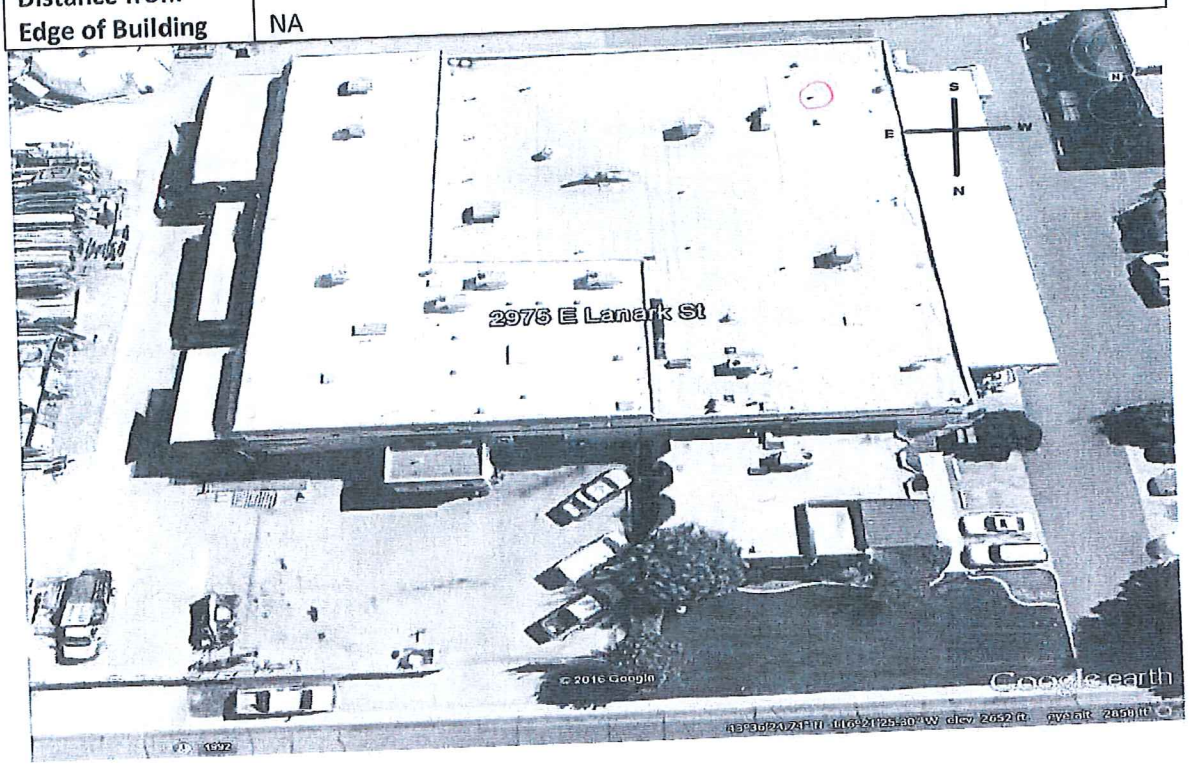

YMC, Inc. 2975 E. Lanark St. Meridian, ID 83642

Unit No.	**UH 4**
Location	SOUTH WALL OF SHEET METAL SHOP
Type of Equipment	INFARED RADIANT HEATER
Make	WONDAICE
Size	115V 60HZ 12AMPS MAX
Model No.	RAD-100 (11)
Serial No.	G3427
BTU	100,000
Filter Size	NA
Filter Quantity	NA
Belt Size	NA
Stack Height	NA
Flue Height	1' OUT OF ROOF 4" ROUND
Distance from Edge of Building	NA

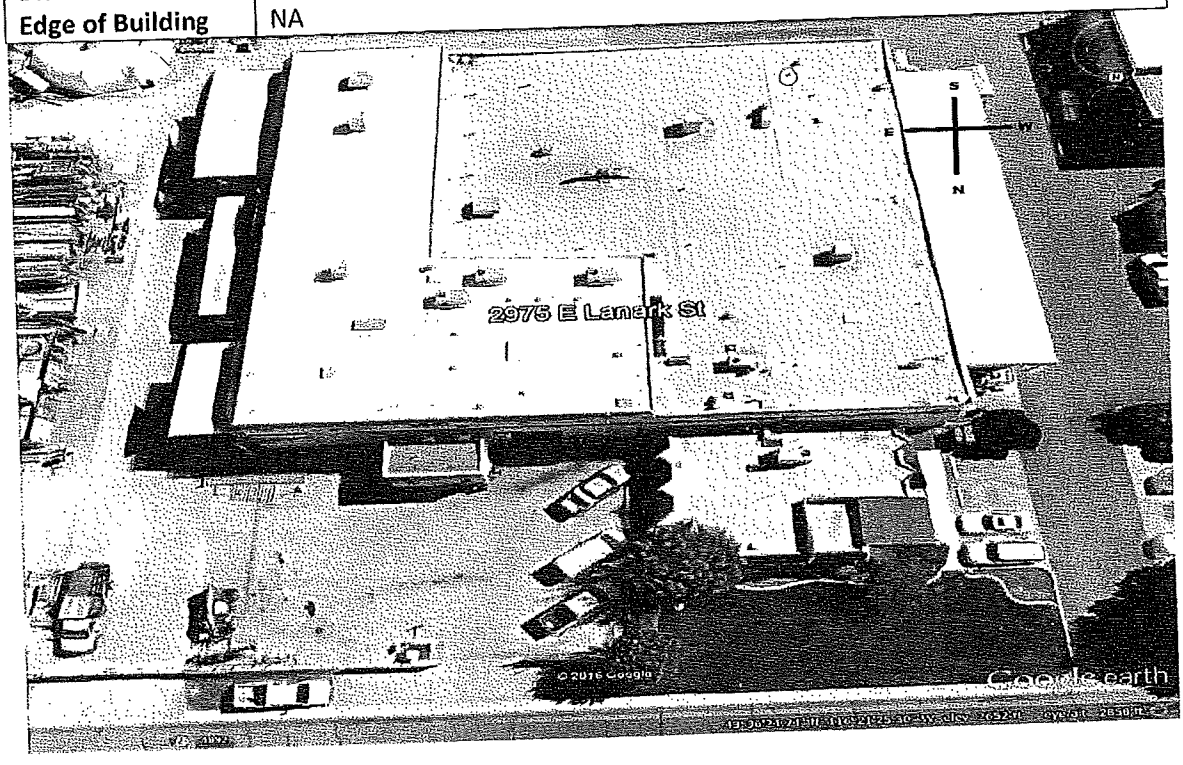

YMC, Inc. 2975 E. Lanark St. Meridian, ID 83642

Unit No.	**UH 5**
Location	CENTER OF SHEET METAL SHOP
Type of Equipment	INFARED RADIANT TUBE HEATER
Make	WONDAICE
Size	115V 60HZ 12AMPS MAX
Model No.	RAD-100 (11)
Serial No.	G3432
BTU	100,000
Filter Size	NA
Filter Quantity	NA
Belt Size	NA
Stack Height	NA
Flue Height	1' OUT OF ROOF 4" ROUND
Distance from Edge of Building	NA

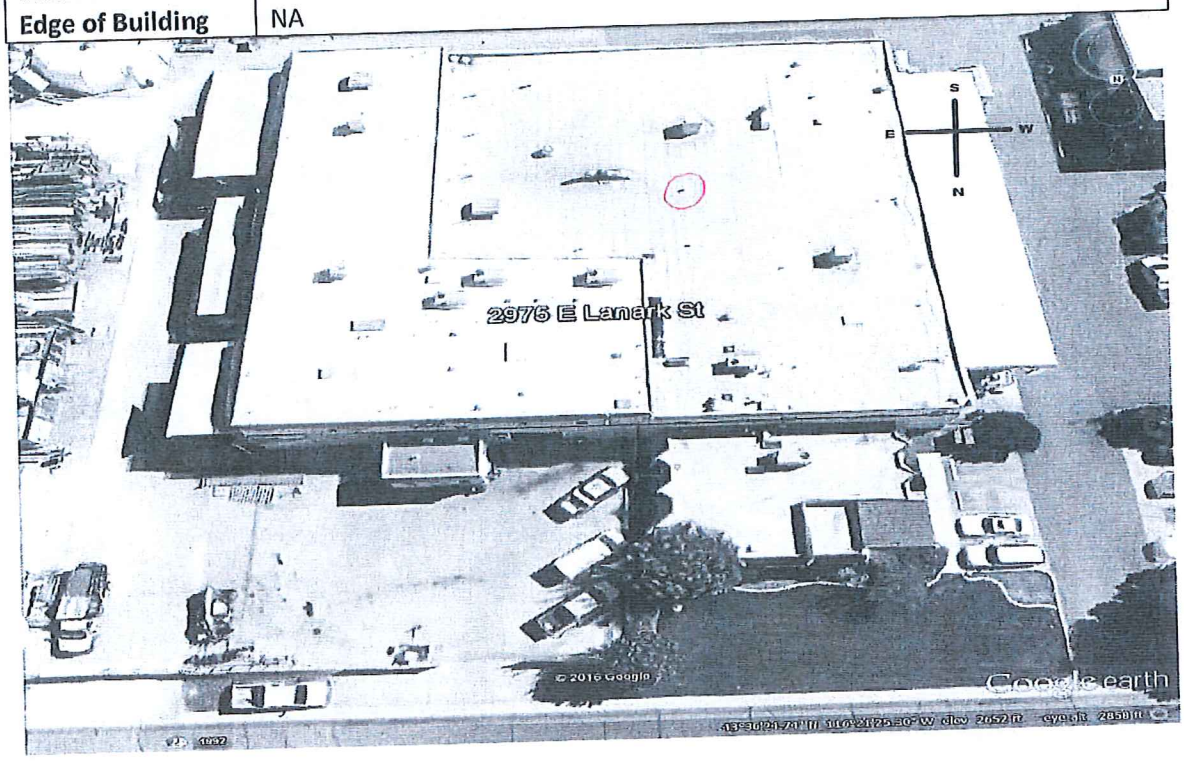

YMC, Inc. 2975 E. Lanark St. Meridian, ID 83642

Unit No.	**UH 6** MFG DATE JUL 2011
Location	NE CENTER OF SHEET METALL SHOP
Type of Equipment	INFARED RADIANT TUBE HEATER
Make	REZNOR
Size	115V 1PH 60HZ 1.1 AMPS MAX INPUT
Model No.	VR75
Serial No.	BKG80U2N09754X
BTU	75,000
Filter Size	NA
Filter Quantity	NA
Belt Size	NA
Stack Height	NA
Flue Height	2' OUT OF ROOF 4" ROUND
Distance from Edge of Building	NA

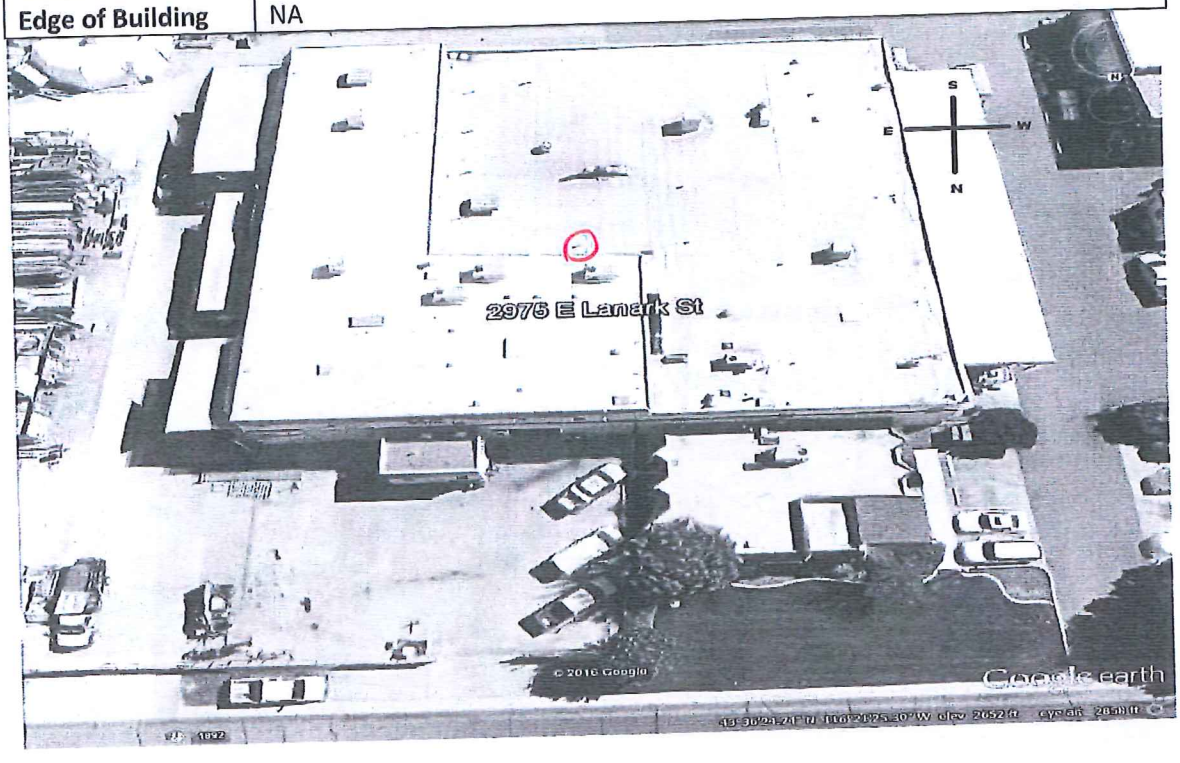

YMC, Inc. 2975 E. Lanark St. Meridian, ID 83642

Unit No.	**UH 7** MFG DATE SEP 2013
Location	NW CORNER OF WELDING SHOP
Type of Equipment	UNIT HEATER
Make	REZNOR
Size	115V 1PH 60HZ 3.8 AMPS
Model No.	UDAP150
Serial No.	BMI796EN45235X
BTU	INPUT 150,000 OUTPUT CAP 124,500
Filter Size	NA
Filter Quantity	NA
Belt Size	NA
Stack Height	NA
Flue Height	5' OUT OF ROOF 4" ROUND
Distance from Edge of Building	6" ROUND 5' FROM NORTH WALL, 32'FROM EAST WALL

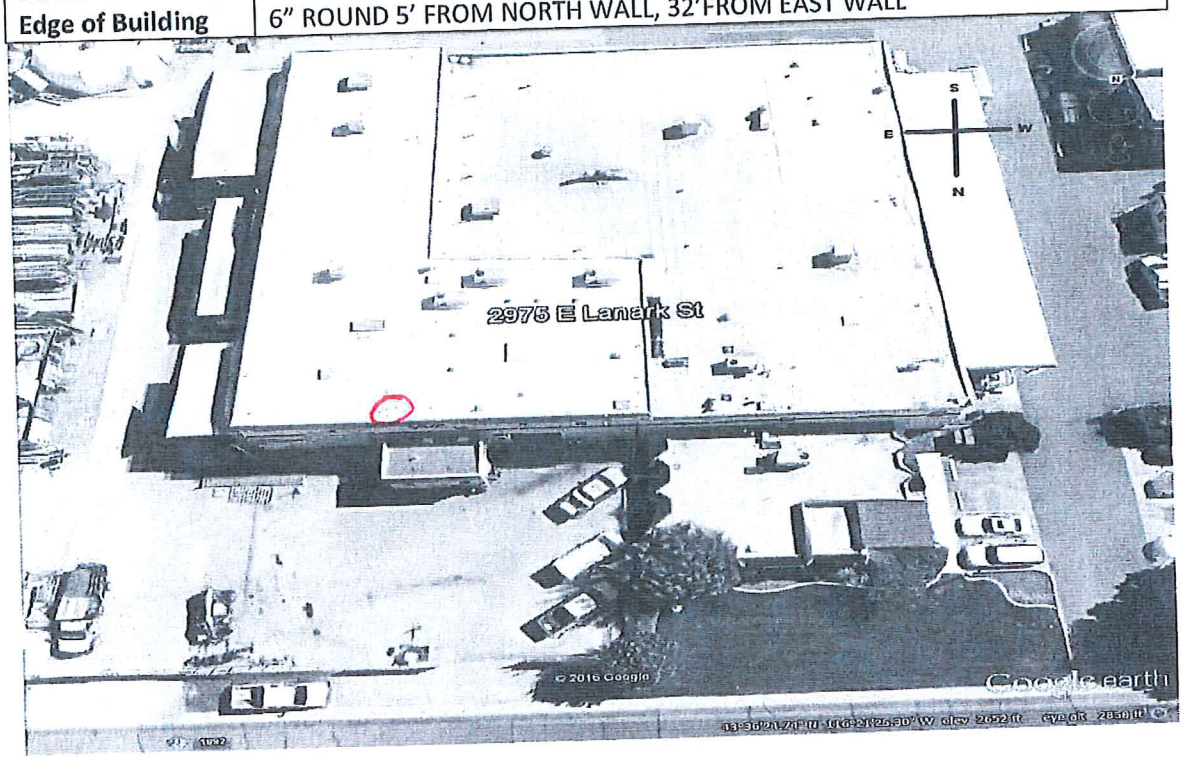

YMC, Inc. 2975 E. Lanark St. Meridian, ID 83642

Unit No.	**UH 8** MFG DATE SEP 2013
Location	NE CORNER OF WELDING SHOP
Type of Equipment	UNIT HEATER
Make	REZNOR
Size	115V 1PH 60HZ 3.8 AMPS
Model No.	UDAP150
Serial No.	BMI796EN42650X
BTU	INPUT 150,000 OUTPUT CAP 124,500
Filter Size	NA
Filter Quantity	NA
Belt Size	NA
Stack Height	NA
Flue Height	5' OUT OF ROOF 4" ROUND
Distance from Edge of Building	6" ROUND 3" FROM EAST WALL, 5'FROM NORTH WALL

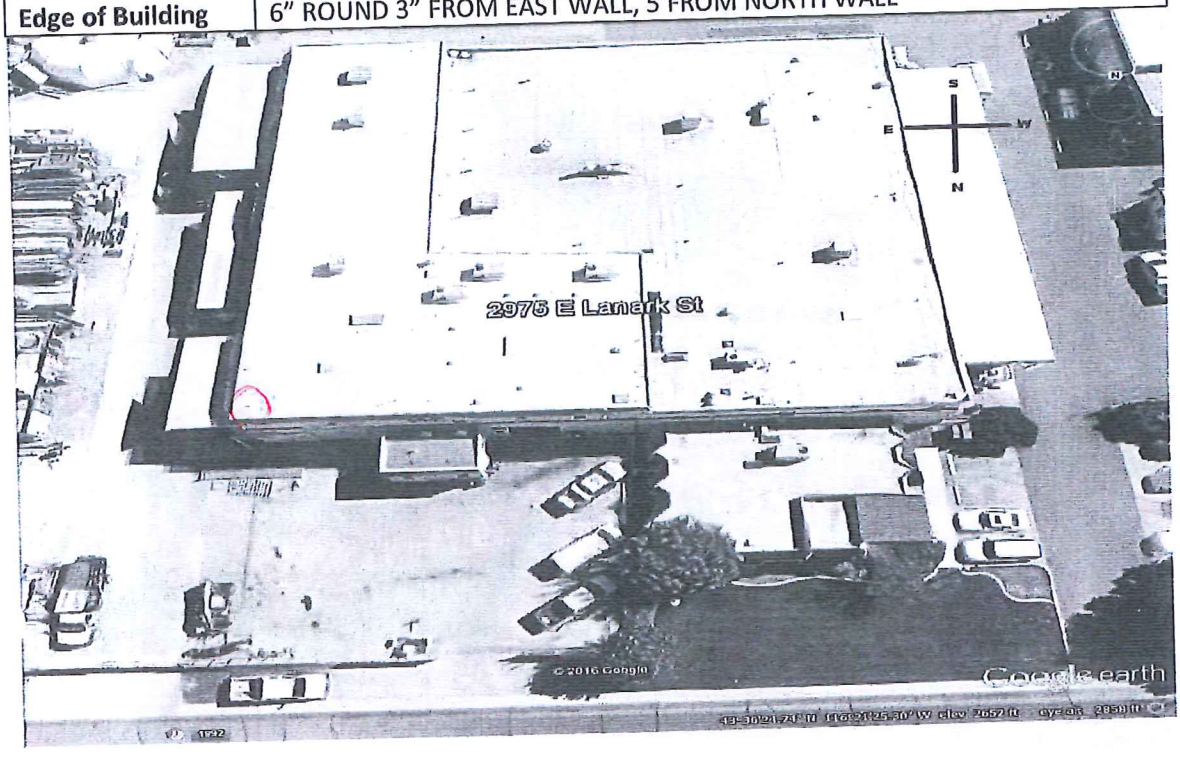

YMC, Inc. 2975 E. Lanark St. Meridian, ID 83642

Unit No.	**UH 9** MFG DATE OCT 2009
Location	CENTER OF WEST WALL IN WELDING SHOP
Type of Equipment	UNIT HEATER
Make	REZNOR
Size	115V 1PH 60HZ 3.8 AMPS
Model No.	UDAP150
Serial No.	BIJ79Y2N16207X
BTU	INPUT 150,000 OUTPUT CAP 124,500
Filter Size	NA
Filter Quantity	NA
Belt Size	NA
Stack Height	NA
Flue Height	5' OUT OF ROOF
Distance from Edge of Building	6" ROUND 30' FROM SOUTH WALL, 32'FROM EAST WALL

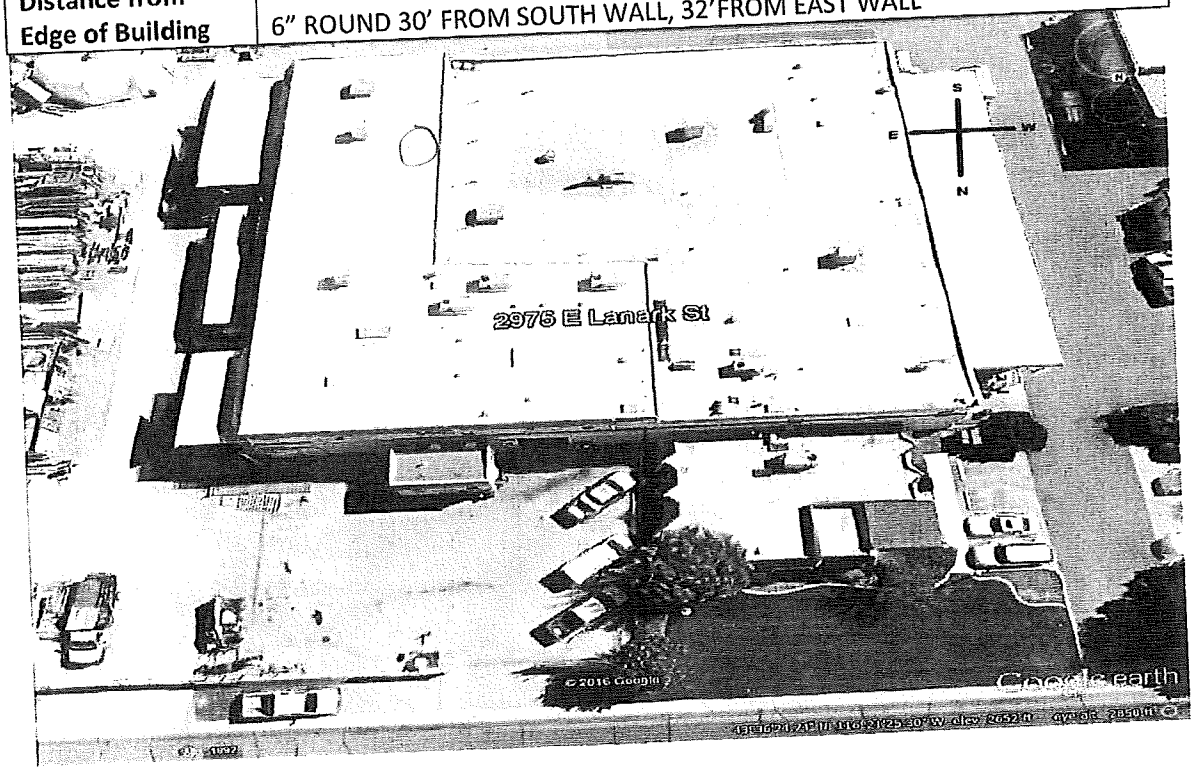

YMC, Inc. 2975 E. Lanark St. Meridian, ID 83642

Unit No.	**UH 10** MFG DATE OCT 2011
Location	SW CORNER OF WELDING SHOP
Type of Equipment	UNIT HEATER
Make	REZNOR
Size	115V 1PH 60HZ 3.8 AMPS
Model No.	UDAP150
Serial No.	BKJ79Y2N22570X
BTU	INPUT 150,000 OUTPUT CAP 124,500
Filter Size	NA
Filter Quantity	NA
Belt Size	NA
Stack Height	NA
Flue Height	5' OUT OF ROOF
Distance from Edge of Building	6" ROUND 3' FROM SOUTH WALL, 32'FROM EAST WALL

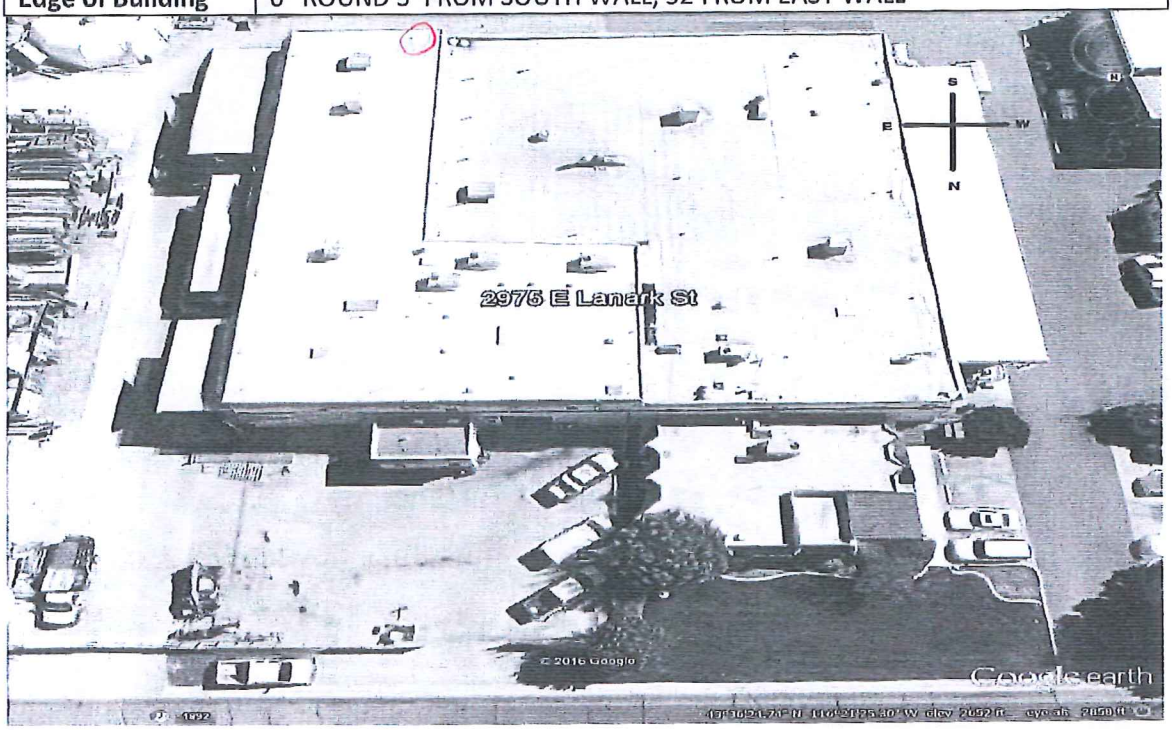

YMC, Inc. 2975 E. Lanark St. Meridian, ID 83642

Unit No.	**UH 11**
Location	NE CORNER OF SHEET METAL SHOP
Type of Equipment	RADIANT HEATER
Make	RADIANT OPTICS INC
Size	120V
Model No.	X3C, X3L
Serial No.	061900-09-066
BTU	MBTUT 066
Filter Size	NA
Filter Quantity	NA
Belt Size	NA
Stack Height	NA
Flue Height	NA
Distance from Edge of Building	NA

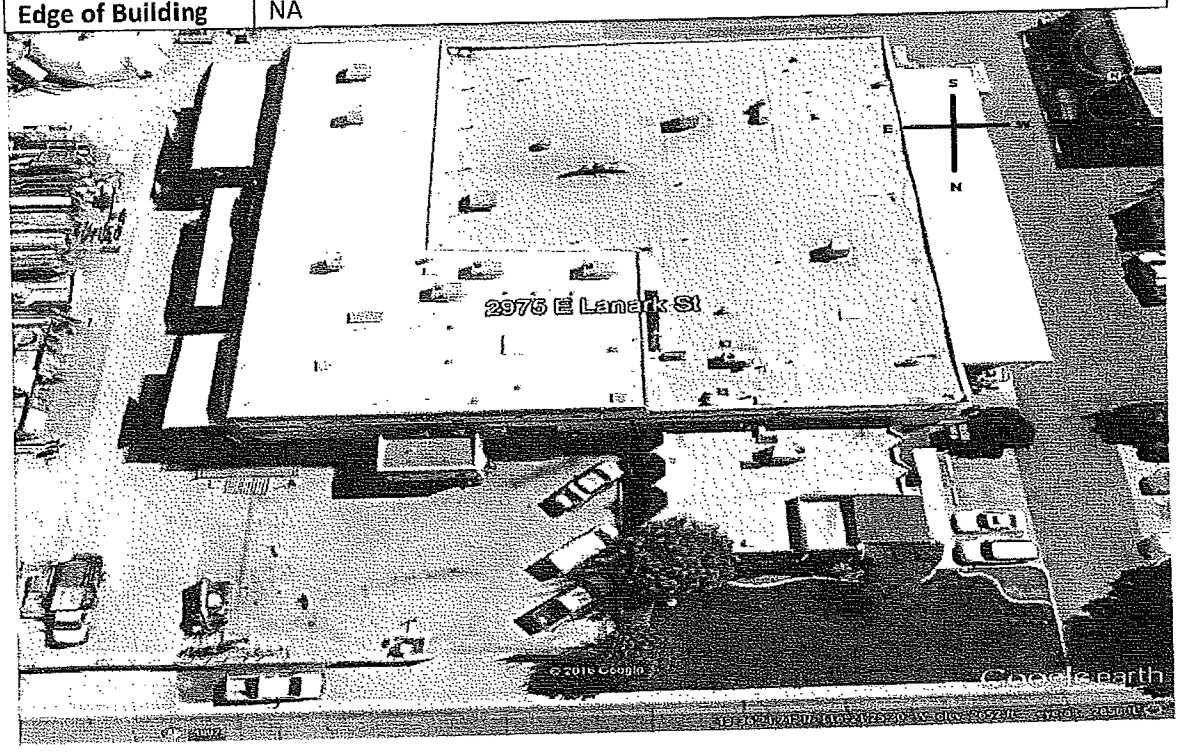

YMC, Inc. 2975 E. Lanark St. Meridian, ID 83642

Unit No.	**UH 12**
Location	EAST OF SHEET METAL SHOP OVER COIL LINE
Type of Equipment	RADIANT HEATER
Make	RADIANT OPTICS INC
Size	120V
Model No.	X3C, X3L
Serial No.	061900-03-066
BTU	MBTUT 066
Filter Size	NA
Filter Quantity	NA
Belt Size	NA
Stack Height	NA
Flue Height	NA
Distance from Edge of Building	NA

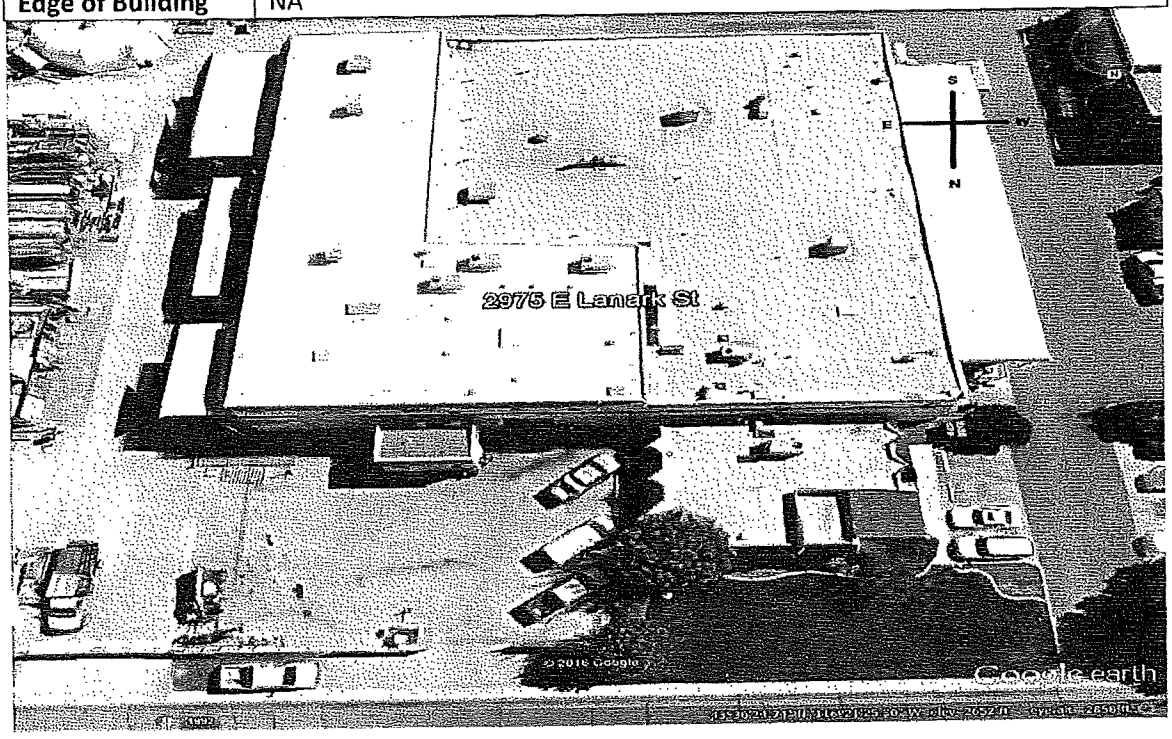

YMC, Inc. 2975 E. Lanark St. Meridian, ID 83642
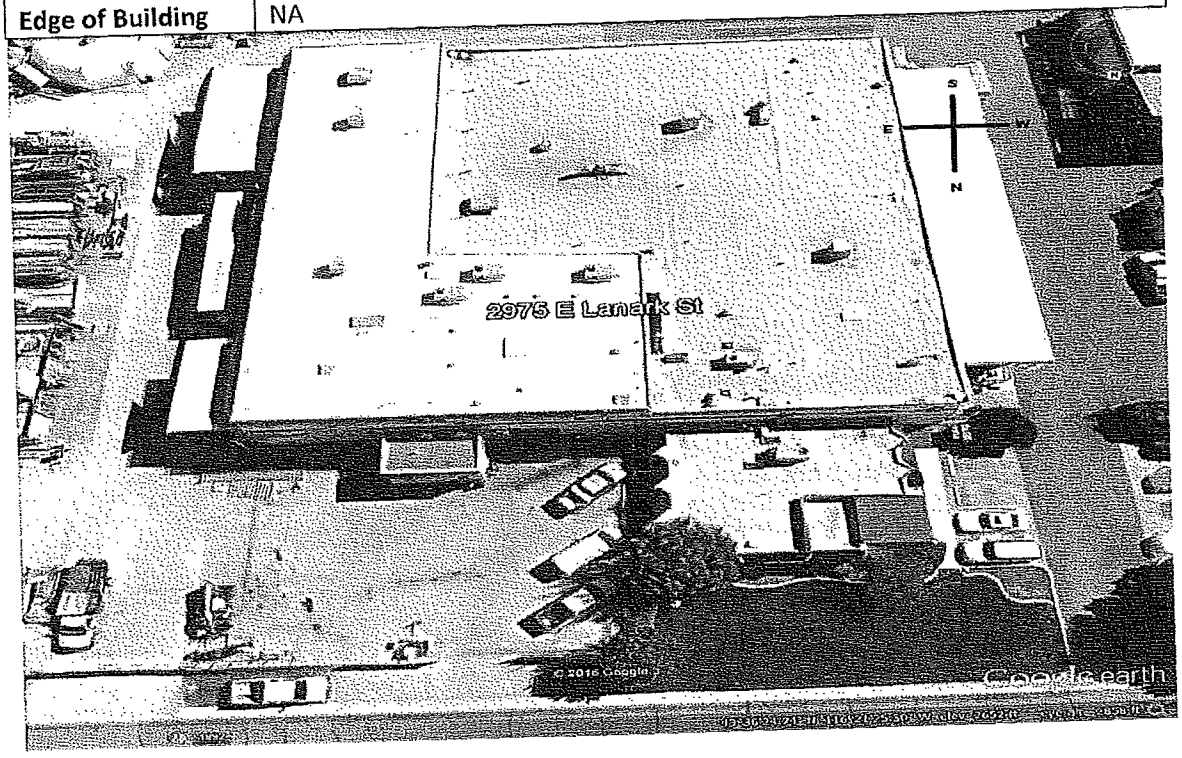
Unit No.	**UH 13**
Location	EAST OF SHEET METAL SHOP OVER COIL LINE
Type of Equipment	RADIANT HEATER
Make	RADIANT OPTICS INC
Size	120V
Model No.	X3C, X3L
Serial No.	061900-00-066
BTU	MBTUT 066
Filter Size	NA
Filter Quantity	NA
Belt Size	NA
Stack Height	NA
Flue Height	NA
Distance from Edge of Building	NA