FINAL

Conda/Woodall Mountain Phosphate Mine

Pedro Creek Sub-Basin Post-Removal Site Control Plan

J.R. Simplot Company

July 2015

Prepared for:

J.R. Simplot Company
P.O. Box 912
1130 West Highway 30
Pocatello, ID 83204

Prepared by:

Formation Environmental, LLC
2500 55th Street, Suite 200
Boulder, Colorado 80301

TABLE OF CONTENTS

Page
LIST OF TABLES ..... **iii**
LIST OF FIGURES ..... **iv**
LIST OF APPENDICES ..... **v**
LIST OF ACRONYMS/ABBREVIATIONS ..... **vi**
1.0 INTRODUCTION **1**
1.1 Background 1
1.1.1 NTCRA Background 1
1.1.2 FSPS Background 3
1.2 Document Organization 3
2.0 POST-REMOVAL SITE CONTROL OBJECTIVES **5**
3.0 OPERATIONS AND MAINTENANCE PLAN **6**
3.1 Inspection Sequence 7
3.2 Inspection of Vegetated Soil Cover Erosion Controls 8
3.2.1 Vegetated Soil Cover 8
3.2.2 Fiber Wattles 9
3.2.3 Silt Fencing 9
3.3 Inspection of Run-On and Runoff Controls 10
3.3.1 Ditches, Channels, Chutes, Berms and Swales 10
3.3.1.1 Vegetated Ditches, Swales and Berms 11
3.3.1.2 Turf Reinforcement Mat 12
3.3.1.3 Riprap 12
3.3.1.4 Grouted Riprap 13
3.3.1.5 Articulated Concrete Mat 13
3.3.2 Culverts 14
3.3.3 Stormwater Flow Energy Dissipation Structures 14
3.4 Inspection of Basins and Seep Collection Ponds 16
3.5 Inspection of Roads and Fencing 18
3.6 Inspection for Fill Settlement 18
3.7 Operation and Maintenance Reporting and Plan Modifications 18
4.0 EFFECTIVENESS MONITORING PLAN **20**
4.1 Data Quality Objectives 20
4.1.1 Problem Statement 21
4.1.2 Decision Statement 21
4.1.3 Decision Inputs and Decision Rules 22
4.1.4 Limits on Decision Errors 25
4.1.5 Optimizing the Sampling Design 26
4.1.6 Special Training Needs/Certification 26
4.2 Applicable or Relevant and Appropriate Requirements 26
4.3 Media Sampling 26
4.3.1 Groundwater Sampling 26
4.3.2 Surface Water Sampling 27
4.3.3 Sediment Sampling 28
4.3.4 Soil and Vegetation Sampling 29
4.4 Sample Handling and Laboratory Analysis 32
4.5 Sampling Quality Assurance and Control 34
4.5.1 Field Quality Control 34

4.5.2 Laboratory Quality Control 34
4.6 Data Quality Indicators 35
4.7 Quality Assessment and Corrective Actions 35
4.8 Monitoring Reporting Requirements 35
5.0 SCHEDULE 36
6.0 REFERENCES CITED 38

LIST OF TABLES

Table	Title
3-1	Approved Seed Mix
3-2	Basin Volume Comparison
4-1	Decision Inputs and Decision Rules by Media Type
4-2	Comparison of Historic Concentrations
4-3	Summary of potential Applicable or Relevant and Appropriate Requirements (ARARs)
4-4	Media Sample Locations
4-5	Summary of Analytical Parameters
4-6	Sample Preservation Methods and Holding Times
4-7	Range of COPC concentrations in Native Dinwoody Formation
4-8	Summary of Analytical Methods

LIST OF FIGURES

Figure	Title
1-1	Conda/Woodall Mountain Phosphate Mine Location
1-2	NTCRA and FSPS Features in Pedro Creek Sub-Basin
1-3	Current and Past Topography at NTCRA and FSPS Overburden Piles
3-1	Summary of Stormwater Controls at the Pedro Creek NTCRA
3-2	Summary of Stormwater Controls at the FSPS
3-3	Summary of Stormwater Controls at the Dinwoody Borrow Area
3-4	Straw Wattles Details
3-5	Silt Fence Details
3-6	Articulated Concrete Mat Details
3-7	Fence Line Details
3-8	Locations for Settlement Survey
4-1	Performance Monitoring Sample Locations
4-2	Decision Units and Incremental Sampling Grids
4-3	Example Replicate Sampling Grids

LIST OF APPENDICES

Appendix	Title
A	Inspection Forms
B	Standard Operating Procedures (electronic copy on CD)
C	Manufacturer's Information (electronic copy on CD)
D	HASP (electronic copy on CD)
E	Comment and Response Documents (electronic copy on CD)
F	Dinwoody Formation Analytical Data (electronic copy on CD)

LIST OF ACRONYMS/ABBREVIATIONS

ACM	articulated concrete-block mat
ARAR	Applicable and/or Relevant and Appropriate Requirement
AQWC	Ambient Water Quality Criteria
BLM	Bureau of Land Management
CCB	Continuous Calibration Blank
CMP	corrugated metal pipe
COPC	Contaminant of Potential Concern
CSR	Construction Summary Report
D&IP	Design and Implementation Plan
DOI	Department of Interior
DQI	Data Quality Indicators
DQO	Data Quality Objectives
EE/CA	Engineering Evaluation/Cost Analysis
fps	feet per second
FSPS	Field Scale Pilot Study
GPS	Global Positioning System
HASP	Health and Safety Plan
HAZWOPER	Hazardous Waste Operations and Emergency Response
ICB	Initial Calibration Blank
ICV	Initial Calibration Verification
IDEQ	Idaho Department of Environmental Quality
LCS	Laboratory Control Standard
MCL	Maximum Contaminant Level
MDL	Method Detection Limit
MS	Matrix Spike
MSD	Matrix Spike Duplicate
NCHRP	National Cooperative Highway Research Program
NCP	National Contingency Plan
NPK	nitrogen, phosphorus and potassium
NRCS	Natural Resources Conservation Service
NTCRA	Non-Time-Critical Removal Action

ODA	Overburden Disposal Area
O&M	operations and maintenance
OSWER	Office of Solid Waste Emergency Response
PRSC	Post-Removal Site Control
PVC	polyvinyl chloride
QA/QC	Quality Assurance/Quality Control
RG	Remediation Goals
RI/FS	Remedial Investigation/Feasibility Study
SA/CO	Settlement Agreement/Consent Order
SAP	Sampling and Analysis Plan
SNOTEL	Snow Telemetry
SOP	Standard Operating Procedure
TRM	turf reinforcement mat
USACE	United States Army Corps of Engineers
USEPA	United States Environmental Protection Agency
USFS	United States Forest Service
USGS	United States Geological Survey

1.0 INTRODUCTION

The J.R. Simplot Company (Simplot) has prepared this Post-Removal Site Control (PRSC) Plan to describe the operation and maintenance (O&M) and effectiveness monitoring activities needed to ensure the long-term function of the Pedro Creek Overburden Disposal Area (ODA) Non-Time-Critical Removal Action (NTCRA) at the former Conda/Woodall Mountain Phosphate Mine (Conda). Conda is located approximately 8 miles northeast of Soda Springs in Caribou County, Idaho (Figure 1-1), and the Pedro Creek ODA forms part of the South Woodall Mine Panel (Figure 1-1). The NTCRA was performed at an angle-of-repose overburden pile situated in the headwaters area of the Pedro Creek (Figures 1-1 and 1-2). The PRSC Plan has been prepared consistent with the NTCRA's Settlement Agreement/Consent Order (SA/CO) (IDEQ 2012a) and accompanying Statement of Work (IDEQ 2012b).

As an operator of the former Conda Mine, Simplot voluntarily entered into a SA/CO (IDEQ 2012a) with the Idaho Department of Environmental Quality (IDEQ), the U.S. Environmental Protection Agency (EPA), and the U.S. Department of Interior's (DOI) Bureau of Land Management (BLM) to conduct the NTCRA. The IDEQ, USEPA, and BLM are hereinafter collectively referenced as the Agencies. The Department of the Interior's U.S. Fish and Wildlife Service and the Shoshone-Bannock Tribes are Support Agencies for the NTCRA.

At the request of the Agencies, this PRSC Plan also addresses O&M and monitoring activities for the regraded overburden pile forming part of the Field-Scale Plant Selenium Uptake Pilot Study (Field-Scale Pilot Study or FSPS) (Figure 1-2). Activities at the FSPS overburden pile were not implemented as part of the NTCRA; however, because it is also situated in the headwaters area of Pedro Creek, conditions there will also be monitored.

1.1 Background

The following subsections provide background information for the NTCRA and the FSPS.

1.1.1 NTCRA Background

Remedial Investigation/Feasibility Study (RI/FS) characterization activities indicated that the angle-of-repose overburden pile situated in the headwaters area of the Pedro Creek was the primary source of ongoing selenium releases into the Pedro Creek Sub-Basin (Figure 1-2) at Conda. Prior to implementation of the NTCRA, the steep side slopes of the overburden pile were prone to erosion which contributed to the downstream transport of overburden material (Figure 1-3). The steep slopes of the pile also made it potentially unstable and slope failure could have resulted in additional releases to the environment. The flat terraces and negatively sloped areas on the top of the pile promoted pooling of spring snowmelt, rainfall, and runoff

(Figure 1-3), which contributed to infiltration into the pile. Infiltrated precipitation at the base of the pile either entered the groundwater system or was channeled by an underlying draw in the natural ground surface and expressed as seepage (e.g., seep NES-5) at the toe of the pile. The seep water at NES-5 contained elevated levels of selenium and other Chemicals of Potential Concern (COPCs)[1] at concentrations exceeding Ambient Water Quality Criteria (AWQC). Groundwater in close proximity to the pile contains selenium and other COPCs at concentrations exceeding Maximum Contaminant Levels (MCLs). In addition, because vegetation grew directly in the overburden materials, plants were directly accumulating selenium and other COPCs. A determination was made that a NTCRA was necessary to stabilize the pile and reduce releases and migration of selenium and other COPCs from the pile to soil, surface water, sediment, and groundwater in the Pedro Creek Sub-Basin.

The NTCRA called for regrading the angle-of-repose overburden pile and installing a vegetated Dinwoody Formation soil-cover system to improve long-term stability and reduce releases of selenium and other COPCs. Excess excavated overburden materials that could not be consolidated with the regraded pile, due to property boundary constraints (Figure 1-3), were consolidated in the West Pit ODA. The Final Agency-approved Design and Implementation Plan (D&IP) (Formation 2013a) details the design criteria and analysis.

The NTCRA construction occurred during the summers of 2013 and 2014. The bulk of the regrading activities and construction of the Dinwoody Formation soil-cover system occurred in 2013. The areas of thickest fill were surcharged with extra overburden material and left uncovered over the 2013/2014 winter to facilitate consolidation of the fill. All of the designed storm water and seepage controls[2] were constructed in 2013, except for the runoff diversion berm along the transition from the top area and the 3:1 slope of the pile. Anticipating that the diversion berm would need to be removed to facilitate final grading and cover placement activities in the surcharged areas in 2014, an interim berm was constructed. The Final Agency-approved Interim Construction Summary Report (CSR) (Formation 2013b) details the 2013 construction activities.

A rain-on-snow event in April of 2014 resulted in runoff flowing over the top of the interim berm in several locations.[3] The breaches allowed runoff water to create several erosion rills on the east and northeast sides of the regraded pile and overburden from the south surcharge to erode into the east runoff control ditch and the east sedimentation basin. During this rain-on-snow the spillway at the NES-5 Seep Pond embankment was blocked by debris, resulting in the pond's surface elevation approaching that of the embankment crest. Subsequent inspections

[1] The main Conda COPCs include the risk-driving constituents selenium, arsenic, cadmium, chromium, nickel, vanadium and zinc, as identified in the Final Conda RI/FS Work Plan and Sampling and Analysis Plan (SAP) (NewFields 2008a, 2008b). Additional constituents are being evaluated as part of the Remedial Investigation.

[2] Four sedimentation basins were constructed to control runoff. In addition, two seep collection ponds were constructed to contain seepage emanating from NES-5 and NES-7 seeps.

[3] The precipitation for the month of March (3.94 inches) was nearly three times the average (1.38 inches) for that month. Warm temperatures and precipitation resulted in rapid runoff with water flowing over the top of the berm and cutting channels through the berm.

conducted on the embankment identified the presence of piping features where fine-grained material got eroded through the embankment (due to the created hydraulic gradient between the seep collection pond and the northeast sedimentation basin). Concerns that the piping features decreased the embankment's stability led to the decision to reconstruct the NES-5 seep pond embankment. Therefore, construction activities in 2014 included the reconstruction of the NES-5 seep pond embankment, the grading of the surcharge piles (following confirmation that the rate of settlement of the surcharged areas slowed down), the construction of the top area runoff diversion berm and a new diversion ditch, and the installation of the remainder of the soil-cover system. In addition, construction activities also included the repair of the eroded areas, removal of sediment from basins and ponds, and additional reseeding. The Final NTCRA CSR (Formation 2015) presents the final as-built details for the NTCRA. Figure 1-3 presents the current and past topography at the NTCRA.

1.1.2 FSPS Background

During the development and approval process for the Engineering Evaluation/Cost Analysis (EE/CA) for the Pedro Creek ODA NTCRA (Formation 2010), the Agencies expressed concern that a 12- to 18-inch thick vegetative cover system would not prevent plant roots from growing into the overburden material and adequately reduce selenium concentrations in the plant cover. Simplot and the Agencies agreed to conduct the FSPS at an existing overburden pile located adjacent to the NTCRA pile (Figure 1-3) to evaluate whether the use of shallow rooted low-selenium accumulating grass species would reduce overall plant selenium concentrations on ODAs. The FSPS overburden pile was graded to achieve 3:1 side slopes (Figure 1-3), and stormwater controls (e.g., run-on and runoff diversion ditches, berms and a sedimentation basin) were installed. A Dinwoody-Formation derived soil cover was placed on the disturbed surfaces, except on parts of the pile reserved for evaluating selenium uptake in vegetation growing directly on overburden. The FSPS plots were constructed on the easterly aspect slope of the pile. The Final FSPS CSR (Formation 2013b) details the construction of the FSPS. During construction activities associated with the NTCRA it was determined that a seep collection pond needed to be built at the FSPS pile. The FSPS seep collection pond was constructed in 2013.

1.2 Document Organization

This document has been prepared pursuant to the Statement of Work accompanying the NTCRA SA/CO (IDEQ 2012b), and is consistent with Section 300.415(l) of the National Contingency Plan (NCP) and the Office of Solid Waste and Emergency Response (OSWER) Directive 9360.2-02. The document is organized as follows:

- Section 1 – Introduction: Background information on the NTCRA and FSPS.
- Section 2 – PRSC Objectives: A summary of the PRSC objectives.

- Section 3 – Operation and Maintenance (O&M) Plan: Details the inspection and maintenance procedures, contingency plans, as well as reporting procedures.
- Section 4 – Effectiveness Monitoring Plan: describes the monitoring methods, procedures, and reporting.
- Section 5 – Schedule: presents an overview of the schedule.
- Section 6 – References: A summary of references cited.

Inspection forms are provided in Appendix A; standard operating procedures are provided in Appendix B; relevant manufacturers' information is provided in Appendix C; the Health and Safety Plan is provided in Appendix D; and comment and response documents are provided in Appendix E. As-built drawings for the NTCRA and FSPS are presented in the Final NTCRA CSR (Formation 2015) and the Final FSPS CSR (Formation 2013b), respectively.

2.0 POST-REMOVAL SITE CONTROL OBJECTIVES

The following paragraphs summarize the objectives of the PRSC O&M and monitoring activities.

The O&M objective is to maintain and restore (if necessary) proper functioning of the following components at the NTCRA pile, West Pit, FSPS pile[4], and the Dinwoody Formation soil borrow area:

- Erosion control measures (wattles, and silt fencing);
- Run-on and runoff controls (ditches, berms, energy dissipation structures, and culverts);
- Sedimentation basins (embankments and spillways);
- Seep collection ponds (embankments and spillways);
- Infiltration basins;
- Vegetated soil covers;
- Access roads; and
- Fencing.

The final as-built drawings depicting the details of the NTCRA and FSPS are included in the Final NTCRA CSR (Formation 2015) and the Final FSPS CSR (Formation 2013b). These drawings will be consulted during the O&M inspections.

The monitoring objectives of the PRSC include:

- Surveying for settlement to monitor for pile movement and deformation;
- Sampling surface water, groundwater, sediment, soil, and vegetation to monitor for changes in COPC concentrations; and
- Monitoring for establishment of unwanted plant species on the soil covers.

[4] For the FSPS pile, O&M and monitoring related activities will exclude the easterly slope of the pile, where the study plots are situated, to preserve the integrity of the study.

3.0 OPERATIONS AND MAINTENANCE PLAN

The O&M activities include regular inspections to identify any issues that require correction, maintenance, and/or contingency actions, as well as reporting requirements. Inspections will be conducted by experienced Simplot personnel or Simplot contractors. The Agencies will make a determination in a Final Remedial Action Record of Decision whether or not additional cleanup actions at the NTCRA and FSPS piles and the West Pit are necessary, based on the findings of monitoring and information gathered as part of the RI/FS. The requirement for this PRSC Plan will end upon the Effective Date of Consent Decree signed by Simplot for implementation of remedial action at Conda, providing that the Consent Decree includes site control requirements equivalent to those in this PRSC Plan.

Routine inspections will be performed in late spring/early summer, summer and late fall. Spring inspections will occur after spring snowmelt when conditions are dry. Fall inspections, to ensure that all stormwater controls can function as intended during spring runoff, will occur before weather conditions make the area difficult to access. Inspections will also occur following:

- Storms larger than the 100-year, 24-hour event, defined as 3.0 inches in the Final D&IP (Formation 2013a) and the Final FSPS Work Plan (Formation 2011). Total storm precipitation will be measured by Simplot personnel at the Conda pump station;
- Seismic events greater than or equal to magnitude 6 at Conda, as identified from the U.S. Geological Survey (USGS) website5; and
- Forest fires that may impact the NTCRA or FSPS components.

Potential detrimental effects from short duration storms will be identified during the inspections and will be addressed, as necessary, prior to the onset of winter. If vegetation at the NTCRA and FSPS is not well established (i.e., not able to appropriately limit soil erosion), as determined by a qualitative assessment (Section 3.1.5) and in consultation with the Agencies, maintenance seeding may be implemented. Larger woody vegetation, such as brush or trees, will not be allowed to establish in basin embankments and spillways or in the run-on and runoff control ditches.

Each inspection will be documented on the forms provided in Appendix A and will include a photographic log, as discussed further in Section 5. The following subsections provide a description of the inspection components (Figures 3-1 through 3-8) and their corresponding inspection procedures. Copies of the as-built drawings for the NTCRA and the FSPS are included in the Final NCTRA CSR (Formation 2015) and the Final FSPS CSR (Formation 2013b), respectively.

[5] http://earthquake.usgs.gov/eqcenter/recenteqsus/Maps/US2/42.44.-112.-110.php

3.1 Inspection Sequence

The inspections will be performed in the following spatial progression at the NTCRA:

1) West Pit (including the west infiltration basin),

2) Upslope area (run-on/runoff control ditches, 24- and 36-inch culverts, and southwest sedimentation basin),

3) Regraded top area surface (Including runoff diversion ditch and berm and tie-ins to the north and south channels),

4) Northern channel, chute, articulated concrete mats (ACM) and weep drains, 48-inch culvert, and access road,

5) Northeastern sedimentation basin (including energy dissipation structures and spillway) and NES-5 seep collection pond,

6) Eastern runoff ditches and access roads,

7) Eastern sedimentation basin (including energy dissipation structures and spillway) and NES-7 seep collection pond,

8) South runoff swale along the south pit highwall, and

9) South chute and southeast sedimentation/infiltration basin.

Inspections at the FSPS will be performed in the following progression:

1) FSPS north runoff ditches, culvert, and access road,

2) FSPS sedimentation basin (including energy dissipation structures and spillway) and seep collection pond,

3) FSPS south and east runoff control ditches and energy dissipation structure; and

4) FSPS regraded pile surface and top runoff diversion berm (excluding study plots).

Inspections at the Dinwoody Formation soil borrow area will be performed in the following progression:

1) Northern borrow area ditches and north borrow sedimentation basin; and

2) Southern borrow area swale and south borrow sedimentation basin.

Each of the above-mentioned components are included in the inspection forms, as appropriate.

3.2 Inspection of Vegetated Soil Cover Erosion Controls

This subsection discusses inspections of the soil covers on the NTCRA pile and the non-study areas on the FSPS pile. For the purposes of this PRSC Plan, erosion control measures are defined as those installed features that are designed to limit or eliminate the movement of the soil covers due to the erosive forces of moving water (Figures 3-1, 3-2, and 3-3). Erosion control measures used include fiber wattles (Figure 3-4) on slopes and perimeter silt fencing (Figure 3-5). Maintenance activities regarding the vegetated soil cover will be documented in inspection reports that will be submitted to the agencies (see Section 4.8).

3.2.1 Vegetated Soil Cover

The regraded piles have Dinwoody Formation soil covers that are a minimum of 12-inches thick which have been seeded with the grass species listed in Table 3-1. The purpose of the soil cover is to reduce infiltration into the overburden pile, to reduce exposure of receptors to the ODA materials, and to provide a clean growth medium to promote revegetation.

Inspection and Maintenance - The vegetated soil covers will be inspected during each of the inspections for signs of erosion (e.g., rilling) and to verify that the covers have not been altered by trespassers, wildlife, or adverse weather. When the inspector determines that erosion has compromised the function of the covers, the Project Engineer will be consulted, the compromised area(s) will be restored with Dinwoody Formation soil from the Dinwoody Formation borrow area, and the repaired area(s) will be reseeded in the fall with the approved grass mix (Table 3-1).

The vegetated soil covers will be monitored for the establishment of selenium accumulators (e.g., *Astragalus, Aster, Medicago sativa* [alfalfa]) as well as infestations of state-listed noxious weeds (in accordance with the Idaho Noxious Weed Law [Title 22, Chapter 24, Idaho Code]). This monitoring is intended to prevent the formation of seed sources for unwanted plant species and to promote successful growth of the grasses. Simplot will have a licensed contractor perform herbicide application in late June or early July 2015 to minimize the reproductive output of any undesired plant species. The goal will be to spray noxious weeds prior to flowering to minimize reproductive output. To the extent possible, herbicide application will be performed on a spot-control basis to minimize ground disturbance, which could foster additional weed infestations. Herbicides to be use will include the currently used DuPont™ products labeled Telar® and Escort®, or similar. These products specifically target broadleaf species of vegetation, and when properly applied pose no harm to the grasses. Appendix E presents the Material Safety Data Sheets for these herbicides.

In addition, grass growth will be monitored for indications of nutrient deficiencies (e.g. stunted growth, yellowish-green leaves, etc.). If there are indications of nutrient deficiencies, the soil covers will be tested for nitrogen, phosphorous and potassium (NPK). Reapplication of NPK fertilizer will be based on agronomic analyses of the soil covers and recommended application rates from a certified agronomist.

Inspection findings and maintenance actions performed to the cover (e.g., prevalence of rilling and unwanted or selenium-accumulating plant species, and the amount of material used to fix the rilling or to control the unwanted plant species), will be documented in the Annual Operations and Maintenance summary Reports.

3.2.2 Fiber Wattles

Fiber wattles were installed on the slopes of the regraded piles to reduce runoff velocities and the corresponding potential for rill development. These are temporary erosion control features that are needed until vegetation is established. The joints between wattle sections should be overlapped and staggered by five to ten feet. Wattle sections should be embedded by two to four inches (Figure 3-4).

Inspection and Maintenance - The wattles will be examined during each of the scheduled inspections to verify that they are intact, properly embedded and anchored, and functioning until erosion is controlled through vegetation establishment. The development of rills between fiber wattles will serve as an indication that the associated uphill wattles are not functioning properly and are in need of maintenance. Maintenance of fiber wattles that are not functioning properly may consist of re-staking and/or re-embedding the wattles, taking care to properly overlap and stagger joints between wattle sections (Figure 3-4).

3.2.3 Silt Fencing

Silt fences were installed along the perimeters of the piles and the borrow area, and around the infiltration basin in the West Pit (Figure 3-5). The purpose of the silt fences is to reduce the potential for sediment transport to adjacent areas. Straw bales may be used in place of silt fence to reduce the potential for sediment transport beyond the perimeter of the site. Similar to fiber wattles, silt fences are temporary erosion control features that are needed until vegetation becomes established.

Inspection and Maintenance - The silt fencing will be examined during each of the scheduled inspections to verify that they are intact and functioning. If inspections reveal a failure to limit or eliminate sediment movement to adjacent undisturbed areas, silt fences should be re-staked so that they are taut and that the lower edge of the silt fence is appropriately covered with soil (Figure 3-5). In some instances, it may be necessary to replace damaged silt fence sections.

3.3 Inspection of Run-On and Runoff Controls

Run-on controls are designed to capture and collect flows from adjacent, topographically higher areas and convey the flows around the piles. Captured runoff is conveyed to any of several sedimentation and infiltration basins. Run-on and runoff controls comprise ditches, channels, chutes, berms, swales, culverts, and associated energy dissipation structures. In general, each of these structures was designed to handle flows estimated to result from the 100-year, 24-hour storm event, with a minimum of 1 foot of freeboard. Figures 3-1 through 3-3 present a summary of the run-on and runoff controls and the type of protection installed at the NTRCA, FSPS, and Dinwoody Formation borrow area.

3.3.1 Ditches, Channels, Chutes, Berms and Swales

The ditches, channels, chutes, berms, and swales at the NTCRA (Figure 3-1) are:

- Run-on and runoff control ditches surrounding the upslope area;
- Runoff diversion ditch and runoff diversion berm on the top area;
- North channel;
- North chute;
- East runoff control ditch;
- South pit swale;
- South chute;
- Run-on control berm above the NES-5 seep collection pond;
- Run-on control berm above the NES-7 seep collection pond; and
- West Pit swales.

At the FSPS (Figure 3-2), the ditches, channels, and berms are:

- Runoff diversion berm at the transition into the 3:1 slope;
- West run-on control ditch;
- North runoff control ditch;

- East runoff control ditch;
- Run-on control berm above the FSPS seep collection pond; and
- South runoff control ditch.

At the Dinwoody Formation borrow area (Figure 3-3), there are ditches conveying runoff into the northern borrow sedimentation basin and a swale along the center of the south borrow excavation (no ditches) which conveys flows to its sedimentation basin.

The above-mentioned structures were protected from erosion based on the estimated flow velocities. The protection included either covering these features with:

1) Vegetation only where peak flows are estimated to be less than 5 feet per second [fps];
2) Turf Reinforcement Mats (TRM) and vegetation where peak flows are estimated to be between 5 and10 fps;
3) Riprap where peak flows are estimated to be between 10 and 15 fps; and
4) Grouted riprap or ACM (Figure 3-6) where peak flows are estimated to be greater than 15 fps.

Specific items to be observed during inspections of these structures are provided below. In addition to inspection of the protective treatments, each run-on and runoff control structure should be inspected for signs of erosion of the Dinwoody material lining.

3.3.1.1 Vegetated Ditches, Swales and Berms

Ditches, swales, and berms where flow velocities during 100-year, 24-hour storm event were estimated to be less than 5 fps were protected from erosion through seeding with grasses. To reduce the potential for erosion before the establishment of the vegetation, these areas were covered with a hydromulch containing a tackifier.

Inspection and Maintenance - The vegetated ditches, swales, and berms will be examined during each of the scheduled inspections to ensure that there is vegetation coverage and that erosion has not compromised the function of the structures. Maintenance will be performed if inspections reveal signs of erosion, overtopping, large woody or rock debris, areas of sediment accumulation, and/or the presence of large vegetation that could promote instability and/or impede discharge. Areas of erosion and/or displacement/damage will be repaired through the addition of new compacted material, and seeding, as necessary. Particular attention will be paid to those areas where compacted Dinwoody Formation soil was placed over overburden

material. Woody debris and any large vegetation needing removal will be placed downgradient of the piles. Non-overburden sediment accumulation in ditches will be removed and consolidated in the Temporary Water and Sediment Management Basin in the top area (Figure 3-1), to restore free drainage.

3.3.1.2 Turf Reinforcement Mat

TRM was installed in ditches, swales, and along berms where flow velocities during 100-year, 24-hour storm event were estimated to be between 5 and 10 fps. The TRM will be inspected to ensure that they are properly anchored (galvanized steel U-anchors) at the frequency recommended by the manufacturer (see manufacturer's information in Appendix C), appropriately overlapped in the down-gradient direction, and that no holes have developed that would require repair.

Inspection and Maintenance - Inspections may reveal that TRM sections have moved and/or have become damaged by debris or large animals. If not damaged, TRM sections may be re-positioned and anchored with galvanized steel U-staples and trenches according to the manufacturer's specifications (included in Appendix C). If TRM sections are judged to be damaged, they will be replaced with similar TRM sections. Seeding with the approved seed mix (Table 3-1) should be conducted prior to TRM placement.

3.3.1.3 Riprap

Riprap was installed in numerous locations associated with NTCRA and FSPS where design calculations indicated that water flow velocities would be between 10 and 15 fps during the 100-year, 24-hour design storm event.

Inspections and Maintenance - Inspections may reveal that some riprapped areas exhibit rock displacement, undercutting, erosion of the edges of the rock placement areas, weathering of riprap rock, and/or damage to the underlying geotextile. Maintenance of such areas would include rearrangement of the riprap rock, possibly including placement of additional riprap. Areas of undercutting and erosion on the edges of riprapped areas will be addressed through the addition of geotextile and compacted fill, as necessary. Weathered riprap rock that can no longer function as intended will be replaced. Areas of exposed geotextile should be inspected for holes, rips or tears, and if the geotextile is in a state of disrepair, it should be replaced with a sufficiently sized patch to prevent gaps in coverage per the manufacturer's instructions, then covered with additional riprap rock.

3.3.1.4 Grouted Riprap

Grouted riprap was installed in certain locations associated with the NTCRA where design calculations indicated that water flow velocities would be greater than 15 fps during the 100-year, 24-hour design storm event and where ACM could not practicably be used.

Inspections and Maintenance - Inspections may reveal grouted riprapped areas that exhibit grout erosion/damage, undercutting, and/or erosion of the edges of the rock placement areas. Areas of undercutting and erosion on the edges of riprapped areas will be addressed through the addition of geotextile and compacted fill, as well as new grout, as necessary.

3.3.1.5 Articulated Concrete Mat

ACM (Figure 3-6) was used in lieu of grouted riprap in the north chute and a portion of the north channel where design calculations indicated that water flow velocities would be greater than 15 fps during the 100-year, 24-hour design storm event. Manufacturer's information for the Armorflex® ACM is provided in Appendix C. The ACM is underlain by geogrid, a coarse gravel drainage layer, and geotextile over existing ground. The concrete blocks include voids that are filled with soil to protect the underlying geogrid from deterioration by ultraviolet light rays.

Inspections and Maintenance - Inspections may reveal that portions of the ACM-lined channels exhibit wear of grouted joints, abrasion of the concrete blocks resulting in overall thinning of the blocks, loss of soil from the voids that exposes the underlying geogrid to sunlight, as well as undercutting and/or erosion of the anchor areas on the edges of the channels. Where the north chute discharges to the northeast basin, inspections will include the outlets of the weep drains of the drainage gravel layer beneath the ACM. The weep drains should be free of any obstructions and capable of freely flowing. Sediment and debris observed in the weep drains during inspections will be removed if damage to the ACM system has occurred or if more than 50 percent of the cross-section of the weep drain is blocked. If erosion along the edges of ACM panels has caused the edge anchors to dislodge, such areas will require the ACM panels to be re-placed in the anchor trenches and granular soil to be compacted in the trenches to original design lines. Soil infill within the ACM panels may become dislodged and washed downstream into the sedimentation basins. Voids in the ACM infill spaces will be replenished with clean soil. The ACM panels may require minor patching with structural epoxy or cement mortar if spalling or cracking occurs over time or following a flood event. If the concrete blocks in the ACM panels no longer function as intended, Simplot will contact the manufacturer to evaluate repairs or replacements to the damaged concrete blocks.

3.3.2 Culverts

There are a total of three round corrugated metal pipe (CMP) culverts at the NTCRA (Figure 3-1), three CMP culverts at the FSPS (Figure 3-2), and one CMP culvert at the Dinwoody Borrow area (Figure 3-3).

At the NTCRA, runoff from the northern portion of the upslope area flows into a 36-inch CMP which discharges into the north chute. Flows in the north chute runoff are conveyed into a 48-inch CMP that is 110 feet long and extends under a portion of the north access road. Runoff from a portion of the southern end of the upslope area flows into a 24-inch CMP, which discharges into the south chute.

At the FSPS, runoff from the south and eastern portion of the regraded pile flows into a 24-inch CMP that discharges to the FSPS basin at the south outfall. On the north side of the FSPS runoff from the pile is conveyed under the north access road through a 24-inch CMP that joins the northern runoff ditch. The northern runoff ditch discharges into the basin through a 24-inch CMP at the south outfall.

At the Dinwoody Borrow area, in the northern area used during the FSPS construction, there is one 24-inch CMP that conveys ditch runoff under an access road leading to the north sedimentation basin.

Inspection and Maintenance – If inspections reveal that sediment has collected in the inlets and outfalls of the culverts, and/or the presence of large vegetation that could promote instability and/or impede discharge and possible erosion around the pipe bedding, sediment and debris will be removed to restore free flowing conditions. The field inspector will inspect culverts where erosion of bedding material has occurred and will consult with the Project Engineer, as necessary, to determine whether the culvert will need to be re-installed or that repairs can be made. If the functionality of the CMPs is compromised due to corrosion, they will be repaired or replaced.

3.3.3 Stormwater Flow Energy Dissipation Structures

Energy dissipation structures are designed to remain intact when subject to estimated flows resulting from a 100-year, 24-hour storm event. At the NTCRA, energy dissipation structures are present at the following locations (Figure 3-1):

- The riprapped outlets of the upslope area run-on and runoff control ditches as they enter the southwest sedimentation basin.

- The grouted riprapped inlet and outlet of the 36-inch CMP connecting the upslope area to the north channel.

- The grouted riprapped inlet and riprapped outlet of the 24-inch CMP connecting the upslope area to the north chute.
- The riprapped tie-ins of the runoff diversion berm with the north and south runoff chutes.
- The grouted riprapped outlet of the 48-inch CMP located on the north chute.
- The grouted riprapped combined outfalls of the north channel and north chute into the northeast sedimentation basin.
- The riprapped outfall of the short v-ditch that enters the northeast pre-sedimentation basin from the south.
- The riprapped outfall of the northeast pre-sedimentation basin to the northeast sedimentation basin.
- The riprapped outlets of the northern and southern segments of the east ditch to the eastern sedimentation basin.

At the FSPS (Figure 3-2), energy dissipation structures are present at the following locations:

- The riprapped inlet and riprapped outfall of the 24-inch CMP from the east runoff control ditch to the sedimentation basin.
- The riprapped inlet of the 24-inch CMP extending under the north access road to the north energy dissipation basin.
- The riprapped energy dissipation where the north ditch and 24-inch CMP come together.
- The riprapped inlet and riprapped outfall of the 24-inch CMP from the north ditch to combined outfall with the east runoff control ditch at the sedimentation basin.
- The riprapped energy dissipation structure where the south run-on control ditch joins the east runoff control ditch.
- Riprap check-dams along the east and north runoff control ditches.

There are no energy dissipation structures associated with ditches at the Dinwoody Formation borrow area (Figure 3-3).

Inspection and Maintenance – Inspections of the above-mentioned energy dissipation structures may reveal that some riprapped areas exhibit rock displacement, undercutting,

erosion of the edges of the rock placement areas, weathering of riprap, and/or damage to the underlying geotextile. Geotextile, if exposed, should be inspected for holes, rips or tears, and if the geotextile is in a state of disrepair, it should be replaced with a sufficiently sized patch to prevent gaps in coverage per the manufacturer's instructions. Maintenance of such areas would include rearrangement of the riprap, possibly including placement of additional riprap rock, and regrouting of the riprap. Areas of undercutting and erosion on the edges of riprapped areas will be addressed through the addition of geotextile and compacted fill, as necessary. Any weathered riprap that can no longer function as intended will be replaced. Areas of exposed geotextile will be covered with additional riprap rock.

3.4 Inspection of Basins and Seep Collection Ponds

The PRSC will include the inspection of sedimentation basins and seepage collection ponds for capacity (Table 3-2), and integrity of the embankments and associated spillways. At the NTCRA, these are:

- The northeast sedimentation basin and its concrete spillway;
- The NES-5 seep collection pond and its CMP spillway;
- The east sedimentation basin and its concrete spillway;
- The NES-7 seep collection pond and its riprapped spillway;
- The southeast infiltration/sedimentation basin and its CMP spillway;
- The southwest sedimentation basin and its CMP spillway; and
- The West Pit Infiltration Basin.

At the FSPS, these are:

- The FSPS sedimentation basin and its concrete spillway; and
- The FSPS seep collection pond.

At the Dinwoody Formation Borrow, these are:

- The northern sedimentation basin and its CMP spillway.
- The southern sedimentation basin and its CMP spillway.

All sedimentation basins are sized to retain the estimated flows from a 2-year, 24-hour storm event with two feet of freeboard to promote the settlement of suspended sediment. Larger events will be released via the emergency spillways into nearby drainages in order to protect the sedimentation basins. The seep collection ponds will also release volumes larger than the design capacity. Any releases from the seep collection ponds will flow into the associated sedimentation basins via a riprapped lined spillway or half-round culvert with a riprapped outlet. The West Pit infiltration basin is designed to reduce the potential for pooling atop the cover, by allowing runoff to infiltrate into the Wells Formation. The West Pit infiltration basin does not discharge any runoff.

Inspection and Maintenance – Inspection of all basins will include observation of the basin embankments for cracks, seepage, and/or sloughing that may be indicative of instability. Any erosion, seepage, or sloughing along the basin embankments will trigger in-depth inspections to ensure the integrity of the embankments. When necessary, the embankment will be repaired using approved compacted fill material. The presence of large, woody vegetation will also be noted during the inspections and such vegetation will be removed. The approximate depth of sediment on the basin floors should be estimated.

The spillways will be inspected to ensure that there is no debris that would restrict flow and that they are maintained in a clear, free-flowing condition. All debris and sediment will be removed to ensure that the spillways can discharge freely. Additionally, the basin spillways that have a concrete cutoff wall will be inspected for cracks, erosion from around the edges, and any undercutting. Clean compacted fill material will be used to fill erosion features around the cutoff walls. Any patching that is required will be implemented using structural epoxy or cement mortar if spalling or cracking occurs over time or following a flood event. Riprapped spillways will be inspected for rock displacement, undercutting, and other potential problems as detailed in Section 3.3.3.

Half-round-culvert spillways will be inspected for sediment accumulation and/or the presence of large vegetation that could promote instability and/or impede discharge, and possible erosion around the pipe bedding. Sediment and debris will be removed to return the culvert to free flowing conditions. Culvert inspections will also include visual observations to ensure continued discharge in the designed direction. The basins that have rock filtration berms will have the berms inspected to ensure that water is capable of freely flowing through the berms. Similar water levels on both sides of the rock berms will indicate that water is freely flowing through the rock berms. A difference in elevation of the water levels in the basin across the rock berms will indicate that flow through the rock berm is restricted. If it is determined that the berms are clogged and no longer allowing water to flow then the inspector will notify the project manager and a process of unclogging the berm will be discussed with the Agencies.

3.5 Inspection of Roads and Fencing

New roads, constructed to access areas around the NTCRA and FSPS piles (Figures 3-1 and 3-2), were built through either fill placement or through cutting into existing ground. Only former haul roads were used to access the West Pit and the Dinwoody Formation borrow area. The new roads are generally 12 to 15 feet wide and are surfaced with approximately four inches of road-base gravel comprised of Rex Chert. Fencing has been erected to deter livestock from accessing the NTCRA and FSPS piles (Figure 3-7)

Inspections and Maintenance - The inspections will evaluate areas where erosion has resulted in removal of the road base and/or resulted in deposition of sediment on the roads. Where the north channel traverses across the access road, the road is protected with a concrete apron. The apron will be inspected for cracking and spalling. Any required repairs will be done using structural epoxy or cement mortar. Any areas with erosion will be filled with suitable compacted material and resurfaced with road base. Drainage ditches along the edge of the roads will also be inspected to verify that they are functioning properly. Any debris present in the roadside ditches will be removed. Fencing (Figure 3-7) will be inspected to ensure that the fences are sound, in working order, and can withstand a challenge by livestock.

3.6 Inspection for Fill Settlement

Permanent concrete settlement monuments were installed to monitor fill settlement at the NTCRA Pile and basin embankments (Figure 3-8). The elevation of each settlement monument will be surveyed during the annual late summer/early fall inspections. In addition, the condition of each settlement monument will be noted, including signs of physical disturbance, deteriorating concrete, etc.

At the FSPS pile, since the fill was placed following a compaction specification, minimal settlement is expected. Therefore no survey monuments were installed at the time of construction. Settlement is monitored by surveying six locations of deepest fill (Figure 3-8) and comparing to as-built post-construction elevations.

3.7 Operation and Maintenance Reporting and Plan Modifications

The need for, and nature of, any necessary maintenance and/or contingency activities will be based on the findings of the previously described annual spring and late summer/early fall inspections. Initial summary reports with inspection observations will be submitted to the Agencies within 30 days following inspections. The inspection forms (Appendix A) for specific portions include areas where the inspection personnel can recommend maintenance and/or contingency actions and the relative urgency of those actions.

An overall inspection and maintenance summary report will be prepared annually. This report will document the observations, findings, and maintenance actions taken. In the event that the inspection identifies no required repairs or actions, a brief summary letter may be prepared and submitted. If a significant event occurs (e.g., 100-yr 24-hour storm events, flooding, seismic events greater than magnitude 6, and/or forest fires), a supplementary inspection will be required that will warrant a separate summary letter report.

Any modifications to the O&M activities will be done through consultation with Agency representatives.

4.0 EFFECTIVENESS MONITORING PLAN

The following sections detail the monitoring activities for the PRSC, including, sampling locations, procedures, and frequency, and laboratory analysis. This section refers the reader to relevant Standard Operating Procedures (SOPs) that describe sampling procedures and methodologies in further detail. The following SOPs are included in Appendix B:

SOP 4: Groundwater Sampling & Water Level Measurements at Monitoring Wells & Piezometers

SOP 5: Sample Custody, Packaging, and Shipment

SOP 6: Water Quality Sampling

SOP 7: Surface Water Discharge Measurement

SOP 8: Sediment Sampling for Chemical Analyses

SOP 9: Soil Sampling for Inorganic Compounds

SOP 13: Equipment Decontamination

SOP 16: Field Documentation

SOP 17: Terrestrial Vegetation Sampling

SOP 18: Vegetation Community Sampling

4.1 Data Quality Objectives

The objectives of the PRSC sampling are to monitor concentrations of selenium and the other main COPCs[6] at and adjacent to the NTCRA and FSPS overburden piles, to support the evaluation of their performance in reducing concentrations of selenium and the other main COPCs relative to pre-NTCRA and pre-FSPS conditions.

The following subsections describe the objectives of the sampling efforts at the NTCRA and FSPS piles by media type and detail the intended data uses. Although sampling will be

[6] The other metals/metalloids with average concentrations greater than one order of magnitude and frequently exceeding risk-based comparison values include arsenic, cadmium, chromium, vanadium, and zinc. These chemicals tend to be present in the seleniferous shale, where they substitute for iron in the metal-sulfide minerals (Desborough and Poole 1983).

performed at the Dinwoody Formation borrow area, due to the below-threshold selenium and other main COPC concentrations there is no need to evaluate performance in reducing concentrations of selenium and the main COPCs relative to pre-borrow area conditions.

This section is organized to be consistent with USEPA's guidance for application of their data quality objectives (DQO) process (USEPA 2006). The DQOs identified in this section describe the types and quality of data needed to support future cleanup decisions.

4.1.1 Problem Statement

The NTCRA and FSPS overburden piles contain middle waste shale and mudstones of the Meade Peak Member that are the predominant sources of selenium and other metals/metalloids to the environment. When the Meade Peak Member shale/mudstones are exposed to air and water, chemical weathering (primarily oxidation) of the metal-sulfide minerals occurs, and selenium and other metals/metalloids associated with the minerals can be released. Physical weathering by wind and water can break Meade Peak Member waste shale/mudstones into smaller particles, thereby increasing the surface area available for further weathering.

The setting of the NTCRA and FSPS overburden piles are conducive to transport of selenium and other COPCs into the Pedro Creek Sub-Basin environmental media. During spring snowmelt and storm events, runoff can transport waste shale/mudstone particles into adjacent soils and Pedro Creek drainages. Precipitation percolating through the weathered overburden material can carry sulfides, releasing these constituents directly into groundwater and surface water. Once in soluble form, direct plant uptake of selenium can also occur. The West Pit, where excess overburden materials associated with the NTCRA were consolidated and covered with a Dinwoody Formation soil cover, is enclosed and may minimize the potential for transport of selenium and other COPCs into the surrounding environmental media. Contamination of the Dinwoody Formation soil cover on the NTCRA pile, the FSPS pile, and the West Pit could occur via upward mobilization of selenium and other COPCs by capillary action.

To reduce the potential for selenium and other COPC releases and transport into the Pedro Creek Sub-Basin environmental media, the overburden piles were graded and covered with 12 to 18 inches of Dinwoody Formation soil.

4.1.2 Decision Statement

The decision statements that are related to the intended effects of regrading and covering of the NTCRA and FSPS overburden piles in the Pedro Creek Sub-Basin include:

1) Are selenium and other COPC concentrations in groundwater, surface water, and sediment downgradient of the piles decreasing relative to concentrations observed prior to the construction of the NTCRA and FSPS?

2) Are selenium concentrations in the Dinwoody Formation soil cover at the NTCRA and FSPS remaining below the screening level of 5 mg/kg?[7]

3) Are selenium concentrations in vegetation growing on the Dinwoody Formation soil cover at the NTCRA and FSPS piles lower than the levels on the overburden piles prior to the grading and cover placement and below the screening level of 5 mg/kg?

4) Are other COPC concentrations in soil and vegetation growing on the NTCRA and FSPS decreasing relative to concentrations observed on the overburden piles prior to the grading and Dinwoody Formation soil cover placement?

The decision statements that are related to the intended effects of regrading and covering of the excess overburden in the West Pit include:

1) Are selenium concentrations in Dinwoody Formation soil cover remaining below the screening level of 5 mg/kg?

2) Are selenium concentrations in vegetation growing on the Dinwoody Formation soil cover remaining below the screening level of 5 mg/kg?

3) Are other COPC concentrations in soil and vegetation growing on the West Pit soil cover decreasing relative to concentrations observed prior to the grading and Dinwoody Formation soil cover placement?

If conditions appear contrary to the above-mentioned intended effects, evaluate whether there is sufficient information available to consider adjustments to the soil covers and/or precipitation and erosion controls, or whether additional information is needed. These evaluations should consider that changes to the various media occur at different rates.

4.1.3 Decision Inputs and Decision Rules

The decision inputs and decision rules are described by environmental media type below and are summarized in Table 4-1.

Groundwater - In order to evaluate whether selenium and the other main COPC concentrations in groundwater are increasing over time relative to conditions prior to the NTCRA and FSPS construction, the following inputs are needed and rules apply.

Decision Inputs are:

[7] The final site-specific risk assessment will provide information to support the process of establishing the PRG for selenium and other COPCs. The final record of decision will establish the final remediation goals (RGs). The selenium RGs for soil and vegetation may differ from 5 mg/kg.

- Directions of groundwater flow in the alluvium/colluvium and Dinwoody Formation aquifers;
- Concentrations of selenium and other COPCs in shallow groundwater (alluvium/colluvium aquifer); and
- Concentrations of selenium and other COPCs in the uppermost-consolidated-formation groundwater (Dinwoody Formation aquifer).

Decision Rules are:

- If shallow groundwater extracted from a well has COPC concentrations above the MCLs, that remain the same or increase over time, then evaluate modifications to the NTCRA and FSPS piles.
- If deeper groundwater extracted from the Dinwoody Formation wells have COPC concentrations above the MCLs that remain the same or increase over time, then evaluate modifications to the NTCRA and FSPS piles.

Surface Water - In order to evaluate whether selenium and the other main COPC concentrations in Pedro Creek surface water or surface water ponds exceed ambient water quality criteria (AWQC) and are increasing over time, the following inputs are needed and rules apply.

Decision Inputs are:

- Selenium and other COPC concentrations in Pedro Creek surface water downstream of the NTCRA and FSPS piles during a range of seasonal flow conditions; and
- Selenium and other COPC concentrations in the seep collection ponds, sedimentation basins water, and stock ponds.

Decision Rules are:

- If selenium and the other main COPC concentrations above AWQCs in Pedro Creek surface water remain the same or increase over time, then evaluate modifications to the NTCRA and FSPS piles.
- If selenium and the other main COPC concentrations above AQWCs in the seep collection ponds and sedimentation basins remain the same or increase over time, then evaluate modifications to the NTCRA and FSPS piles.
- If selenium and the other main COPC concentrations above AWQC in the stock ponds remain the same or increase over time relative, then evaluate modifications to the NTCRA and FSPS piles.

Sediment - In order to evaluate whether selenium and the other main COPC concentrations in sediments are increasing over time relative to conditions prior to the NTCRA and FSPS construction, the following inputs are needed and rules apply.

Decision Inputs are:

- Selenium and the other main COPC concentrations in Pedro Creek and stock pond sediments downstream of the NTCRA and FSPS piles; and
- Selenium and the other main COPC concentrations in sediment collected from sedimentation basins.

Decision Rules are:

- If selenium and the other main COPC concentrations in Pedro Creek and stock pond sediments remain the same or increase over time relative to conditions prior to the regrade and cover placement, then evaluate adjustments to the NTCRA and FSPS piles.
- If selenium and the other main COPC concentrations in sedimentation basin sediments remain the same or increase over time, then evaluate adjustments to the NTCRA and FSPS piles.

Soil Cover - In order to evaluate whether selenium and the other main COPC concentrations in the soil covers at the NTCRA pile, West Pit and FSPS pile are increasing over time or exceed Conda-specific Preliminary Remediation Goals (PRGs) (based on results of the site-specific risk assessment), the following inputs are needed and rules apply.

Decision Inputs are:

- Selenium and the other main COPC concentrations in soil from the cover.

Decision Rules are:

- If selenium and the other main COPC concentrations in the soil cover increases over time or exceed Conda-specific PRGs (based on results of the site-specific risk assessment), then evaluate adjustments to the soil covers.

Since the Dinwoody Formation soil from the borrow area was predominantly tested for selenium as part of the NTCRA activities, soil-cover samples will be analyzed for the full suite of RI COPCs for the first year of PRSC monitoring, to complement existing data.

Vegetation - In order to evaluate whether selenium and the other main COPC concentrations in vegetation growing on the soil covers at the NTCRA pile, West Pit and FSPS pile are increasing over time or exceeding currently accepted screening-level concentrations potentially posing

chronic effects (subject to change based on results of the site-specific risk assessments), the following inputs are needed and rules apply.

Decision Inputs are:

- Selenium and the other main COPC concentrations in vegetation collected from the soil cover on the piles.

Decision Rules:

- If selenium and the other main COPC concentrations in composite vegetation samples growing on the NTCRA pile, West Pit and FSPS pile soil covers are increasing over time or exceeding currently accepted screening-level concentrations potentially posing chronic effects; then evaluate modifications to the soil covers.

4.1.4 Limits on Decision Errors

The null hypothesis for this PRSC plan is that the selenium and the other main COPC concentrations exceeding risk-based criteria in the various environmental media in the Pedro Creek Sub-Basin remain similar or are increasing over time and therefore additional actions may be necessary to improve conditions at the NTCRA and FSPS piles. The alternative condition is that selenium concentrations are decreasing over time, and no additional actions are necessary.

There are two types of decision errors, classified as a false rejection error (Type 1) and a false acceptance error (Type 2). A Type 1 error is determining that concentrations exceeding risk-based criteria are not remaining similar or increasing in the environmental media in the Pedro Creek Sub-Basin, indicating that no modifications or adjustments may be necessary, when in fact they are remaining similar or are increasing and adjustments are necessary. A Type 2 error is determining that concentrations exceeding risk-based criteria are remaining similar or are increasing in the environmental media in the Pedro Creek Sub-Basin, indicating modifications may be necessary, when in reality modifications are not needed. A Type 1 error may result in necessary adjustment not being performed. A Type 2 error may result in unnecessary changes being performed.

To control decision errors, only quantitative data with acceptable accuracy and precision documentation will be used for the effectiveness monitoring. Samples will be analyzed using USEPA-approved methods with detection limits below typical standards. Measurement errors will be minimized by implementing standard operating procedures for the sample collection, handling, preparation and analysis methods.

4.1.5 Optimizing the Sampling Design

The DQOs will be reviewed as the new data is collected. The sampling design and strategy are presented herein, with locations and rationale detailed, and the quality assurance/quality control (QA/QC) requirements discussed. Additional samples may be collected during the effectiveness monitoring, if and as necessary, to increase the confidence of the decision.

4.1.6 Special Training Needs/Certification

It is recommended that personnel conducting sampling activities are 40-hour Hazardous Waste Operation (HAZWOPER) trained per 29 CFR 1910.120 and current with their annual 8-hour refresher course. In addition, all personnel conducting the sampling activities must follow the Health and Safety Plan (HASP) (Appendix F).

4.2 Applicable or Relevant and Appropriate Requirements

In order to evaluate whether the regrading of the NTCRA and FSPS overburden piles result in the reduction of selenium and other COPC releases to the Pedro Creek Sub-Basin, concentrations will be compared relative to average total concentrations in samples collected prior to grading and cover placement at these piles as well as Applicable or Relevant and Appropriate Requirements (ARARs). Table 4-2 provides the minimum, maximum, and average detected historic concentrations in samples collected at the NTCRA and FSPS piles and downgradient of the piles.

Final decisions regarding whether or not further actions are required at these piles to protect human health or the environment will be made by the Agencies, based on ARARs (Table 4-3) and yet to be determined PRGs.

4.3 Media Sampling

The following subsections describe the monitoring of conditions in groundwater, surface water, sediment, soil and vegetation.

4.3.1 Groundwater Sampling

Groundwater monitoring will include sampling of eight (GW-28/29, 41/42, 43, 44, 45/46) monitoring wells annually in the spring, summer and fall, as well as the existing seep locations. Table 4-4 and Figure 4-1 present the proposed groundwater monitoring locations. Groundwater levels will be measured and groundwater samples will be collected for the chemical analyses listed in Table 4-5.

Groundwater samples will be collected by methods found in SOP 4 (Groundwater Sampling and Water Level Measurements at Monitoring Wells and Piezometers). Water level and total depth measurements will be obtained prior to purging the well, and the water level measurement will be repeated immediately following sampling to provide a relative indication of groundwater recharge to the well.

Groundwater sampling collection methods include the use of a flow-through cell to measure select field parameters where feasible (e.g., wells where pumping is either desired or required). The field parameters planned for measurement in the flow-through cells include pH, specific conductance, temperature, dissolved oxygen and oxidation-reduction potential. Flow-through cells prevent exposure of groundwater to the atmosphere and thus provide field measurements that are more representative of in-situ groundwater conditions.

Groundwater samples will be collected in containers provided by the laboratory conducting the chemical analyses. Sample containers will be prepared specifically for the required analyses by the analytical laboratory, and they will be filled with sample water directly from pump tubing (or by pouring from the bailer). The sample bottles and preservation techniques used will be as described in Table 4-6. For the filtered samples, groundwater will be pumped through a 0.45 µm in-line, medium-capacity filter. The in-line filter will be purged with approximately 200 mL of sample water before the laboratory container is filled. Filters and tubing will be used for only one sample and subsequently disposed.

Sample designations and field Quality Control (QC) procedures are described in Section 4.4.1

4.3.2 Surface Water Sampling

Surface water quality monitoring will consist of collecting surface water samples in the spring, summer and fall from the locations summarized in Table 4-4 and Figure 4-1 and analyzing them for constituents identified in Table 4-5. Field measurements (pH, conductivity, temperature, dissolved oxygen, oxidation-reduction potential, and turbidity) will be made at all surface water locations. Discharge rates will be measured and calculated at each station as well.

The timing of the spring surface water sampling events is to coincide with snowmelt runoff conditions, ideally at peak runoff. The timing of peak runoff depends on snow pack conditions, temperature trends, rain events and elevation, among other factors. Therefore, snow telemetry (SNOTEL) and stream gauge data will be consulted in order to determine the timing of the spring surface water sampling event.

Surface water samples, including water quality parameters will be collected according to SOP 6 (Water Quality Sampling). SOP 6 also includes instructions and references to other SOPs regarding documentation, equipment calibration, sample shipping and handling, and decontamination.

As described in detail in the SOP, unfiltered samples will be collected directly from the water bodies into sample bottles. For the filtered samples, water from the source water body will be pumped through a 0.45 µm in-line, medium-capacity filter using either a battery-operated peristaltic pump or hand-held manual pump. The in-line filter will be purged with approximately 200 mL of sample water before the laboratory container is filled. Filters and tubing will be used for only one sample and subsequently disposed. Surface water samples will be collected in bottleware provided by the laboratory conducting chemical analyses. Further information on sample containers and preservation is provided in Table 4-6.

Field parameters will be measured immediately after sample collection and recorded on in field notebooks and on field sampling forms. Additional details on collecting field measurements, including calibration and decontamination procedures, are provided in the SOPs (Appendix D).

Discharge measurements will be made at each of the surface water monitoring locations following the collection of samples, when there is adequate flow to physically take a measurement. The measurements will be performed in accordance with SOP 7 (Surface Water Discharge Measurement) using procedures consistent with those described in the National Handbook of Recommended Methods for Water Data Acquisition (USGS 1977). Flow measurements will be made using one or more of three methods as dictated by streamflow or channel characteristics. Depending on the stream channel characteristics and streamflow rate, an area-velocity method, a portable flume, a volumetric method, or some combination of these methods, will be used to obtain the stream discharge measurements. The method ultimately used will be documented in field records.

In cases where flows are too small to be gauged using the area-velocity method or a cut-throat flume, measurements will be made volumetrically using a calibrated collection container and a stopwatch. Stream flow will be routed through a polyvinyl chloride (PVC) pipe and the time to fill a collection container to a known volume will be measured. A minimum of five trials will be executed for each volumetric measurement, and discharge will be taken as an average of the five trials. As with flume measurements, an estimate of any leakage around the routing pipe will be recorded.

4.3.3 Sediment Sampling

Sediment sampling will be conducted coincident with the spring monitoring event. Additional sediment samples will also be collected following runoff events that result in discharges from the sedimentation basins. Sediment samples will be collected from the locations summarized in Table 4-4 and Figure 4-1 and analyzed for constituents identified in Table 4-5. These locations include creeks, and drainages downgradient of the NTCRA and FSPS as well as within sedimentation basins and seep ponds of the NTCRA and FSPS. Sediment samples will be collected in accordance with the procedures detailed in SOP 8 (Sediment Sampling for Chemical Analyses).

In addition, as a one-time sampling event, sediment material excavated from the East Sedimentation Basin and PCP-2 stock pond which were placed in the former pit near the Rex Chert borrow area (Figure 4-1) in late 2013 will be sampled in 2015.[8] In place sediments at PCP-2 were sampled once in 2008, and the results from that event indicated the presence of COPC metals with elevated concentrations. The known presence of COPCs in the PCP-2 sediment guided the 2013 decision to place the excavated sediment in an already contaminated mine pit. A minimum of 25 subsamples collected from the residual materials in this area will be combined into one composite sediment sample for laboratory analysis as outlined in SOP 8. This sampling is for informational purposes only. Following sampling and characterization of the residuals for selenium and other COPC concentrations, Simplot will work with the Agencies to take appropriate actions if necessary to ensure that these sediments do not pose a threat to human health and the environment.

4.3.4 Soil and Vegetation Sampling

The PRSC soil and vegetation sampling events will occur during the summers. Soil samples will be collected as composite samples in accordance with the Interstate Technology and Regulatory Council (ITRC) Incremental Sampling Methodology (ISM), to provide a reasonably unbiased estimate of mean COPC concentrations (ITRC 2012), for comparison against the range of COPC concentrations detected in the Dinwoody Formation soil (Table 4-7). The NTCRA and FSPS areas will be divided into five decision units (DUs), based on the soil cover thicknesses at the NTCRA, FSPS, and West Pit, with the slope-area DUs based slope aspect (Figure 4-2). The DU and the number of increments[9] for the composite samples (Figure 4-2) are as follows:

1) The easterly facing 3:1 slope area at the NTCRA pile (40 increments, over 33 acres);

2) The northerly facing 3:1 slope area at the NTCRA pile (30 increments, over 20 acres);

3) The upslope and top area at the NTCRA pile (40 increments, over 16 acres);

4) West Pit area (30 increments over 36 acres); and

5) The non-study portion of the FSPS pile (30 increments, over 10 acres).

Vegetation community monitoring and sample collection to measure COPC levels will be from the same grid locations as the soil sampling locations. Vegetation monitoring activities will include annual observational surveys to evaluate and document general conditions (mainly to identify establishment of unwanted plant species), and quantitative vegetation community measurements (mainly to document vegetation cover, dominant species, and species diversity).

[8] A total of approximately 5,000 to 6,000 cubic feet of sediment were placed in the pit.
[9] Increment locations are based on systematic random-start grids.

Soil Samples – For the first year of post removal monitoring, one composite surface soil sample will be collected within each of the five DUs, with the increments (sub-samples) collected from randomly established grid points within each DU (Figure 4-2). Soil sampling will occur no less frequently than every five years. The Agencies and Simplot may also determine that sampling of the NTCRA soil cover soils should occur on a more frequent basis, if the annual NTCRA vegetation sampling or the FSPS soil/vegetation sampling demonstrate that more frequent sampling is warranted (e.g., if COPC concentrations approach risk-based criteria). To evaluate sampling precision, additional completely separate "batch" type replicate samples will be collected. Considering that the soil cover is all Dinwoody Formation derived, the "batch" type replicate can be used to provide an estimate of variability across the DUs (ITRC 2012). Three replicate (Triplicate) samples will be collected in one of the DUs, alternating DUs between sampling events. In 2015, the triplicate samples will be collected from DU-5. To collect samples in triplicate, different random starting locations will be identified, for each of the three composites, and the sampler will follow the same approximate path (Figure 4-3). Equipment rinsate samples will be collected at rate of one per DU.

General Conditions and Quantitative Surveys – General conditions will be surveyed throughout the NTCRA and FSPS areas and photo documentation will be collected. Quantitative vegetation monitoring will be performed at the locations making up the composite ISM samples. Surveys will be conducted by knowledgeable field personnel to document and evaluate general conditions on the piles. Surveys will involve looking for the establishment of unwanted plant species (e.g., selenium accumulators and noxious weeds), and evidence of failed vegetation. Quantitative measurements of plant cover, community structure, and community diversity will also be collected by knowledgeable field personnel. Evaluation of plant cover and community composition will be performed at the ISM locations using an adaptation of the Step Point Method, as outlined by United States Forest Service (USFS) and BLM (1999). The Step Point Method involves making observations at points, using a pin to record cover "hits" at different heights above the ground (USFS and BLM 1999). This methodology provides estimates of total vegetation cover (versus bare ground), cover by individual species, height of vegetation, and species diversity. Specific implementation of this methodology is presented in Conda SOP No. 18 (Vegetation Community Sampling) (Appendix D), and a general description is provided here.

At each observation point, a ¼-inch diameter aluminum pin with marks at 1 inch, 12-, 24- and 36-inches from the end will be lowered vertically until the end hits the ground. The ground-level feature hit with the point of the pin as well as any vegetation intercepted by the pin at other levels will be recorded on the field data sheet by dot count tally. The ground-level hits will be recorded in the Ground-Level Cover section of the form, except where there are both ground-level and other level (i.e., basal or canopy cover hit) combinations. Ground-level/other level combinations will be recorded in the Basal and Canopy Cover section of the form. A dot count tally will be recorded for each ground-level/other level combination when it is first entered on the form and then again each time this same combination is encountered at the observation points.

Ground-level hits (excluding basal vegetation hits) will fall into three cover categories. They can be redefined and/or additional categories added, depending on the site conditions. The three categories are litter (L), bare ground (B), and stone (S; greater than 1 inches). Basal hits on live vegetation are counted when the plant crown is at or below a 1-inch height above the ground. Level 1 hits on live vegetation are counted when vegetation is encountered between 1 and 12 inches above the ground. Level 2 hits on live vegetation are counted when vegetation is encountered between 13 and 24 inches above the ground. Level 3 hits on live vegetation are counted when vegetation is encountered between 25 and 36 inches above the ground. If vegetation is encountered above 36 inches above the ground, that can be noted accordingly on the field data sheet.

To supplement the observation point data, species that are opportunistically observed on the piles, but not encountered at the observation points, will also be recorded on the field data sheets.

The recorded measurements will be used to calculate ground cover, vegetation cover, percent cover by cover category, percent cover by species, and percent cover by vegetation level (i.e., height). Additional observations will be used to ascertain overall species diversity and presence/absence of noxious weeds.

Vegetation Samples – One composite vegetation sample will be collected within each of the five DUs, with the increments (sub-samples) collected from randomly established grid points within each DU (Figure 4-2).

Discrete selenium-accumulator plant species samples will be collected if present. If there is insufficient material present on the sampling grid, then the selenium-accumulating species sample will be augmented with samples of other individuals within the DU. Each vegetation increment will consist of vegetative material that will be collected by cutting the material with scissors. The vegetation increments will be combined as they are collected into a single labeled re-sealable bag to create the composite sample for each DU. A field sampling form will be completed for each sample detailing the contents of the sample.

To evaluate sampling precision, additional completely separate “batch” type replicate samples will be collected for each annual event. Considering that the soil cover in which the vegetation is growing is all Dinwoody Formation derived, the “batch” type replicate can be used to provide an estimate of variability across the DUs (ITRC 2012). Triplicate samples will be collected in one DU for each annual sampling event. The DU chosen for triplicate sampling will vary each year. To collect samples in triplicate, a different random starting location will be identified, for each of the three composites, and the sampler will follow the same approximate path (Figure 4-3).

Upon receipt by the laboratory, vegetation samples will be processed for analysis. All vegetation samples will be submitted to the laboratory as unwashed samples, but they will be washed of adhering particles by the laboratory prior to preparation for analysis (see SOP 17). Each sample will be weighed and then air dried and reweighed before homogenization for analysis.

Equipment rinsate samples will be collected at rate of one per DU.

4.4 Sample Handling and Laboratory Analysis

All of the collected samples will be handled according to SOP 5 (Sample Custody, Packaging, and Shipment) and analyzed using USEPA-approved methods for the parameters summarized in Table 4-5 according to methods listed in Table 4-8. Sample QC procedures are presented in Section 4.5.

Samples will be assigned unique sample identification numbers. These numbers are required for tracking the handling, analysis, and verification or validation status of all samples collected during monitoring. Each sample identification number will identify the sampling location and type of sample. Sample identification numbers will be assigned using several codes as follows.

The first field in the identification number identifies the general sampling location and time period. For example, samples collected in August 2015 will all have the prefix “CD0815”.

The second field in the identification number identifies the location of the sample. For example, use FSPSBasin to designate the sampling location sedimentation basin at the FSPS. Location identifiers have either already been established or they will be established as the field sampling proceeds. The DUs will be labeled as DU1 through DU5.

The third field identifies the sample matrix type and includes a digit describing the intended sample use. The matrix types are defined as:

GW: groundwater

SW: surface water

SD: sediment

SL: soil

VGG: grasses

VGF: forbs

The fourth fields are sample use codes and include:

1: primary sample

2: field duplicate sample

3: equipment rinsate or Quality Assurance/Quality Control (QA/QC) blank sample

Note that additional codes may be added as the project proceeds. The additions will be communicated immediately to the field staff, data management team and project chemist/data validator.

The last field is a three-digit number unique to the specific sample. Numbers will begin with 01 and increase consecutively as sampling tasks are implemented.

For example:

- CD0815-FSPSBasin-SW001, is a primary surface water sample collected from FSPS sedimentation basin.
- CD0815-PRSCDU1-SL201, is a duplicate of the primary sample collected from DU1.
- CD0815-PRSCDU5-SL002, is the second replicate sample collected from DU5.
- CD0815-PRSCDU5-SL003, is a third replicate sample collected from DU5.
- CD0815-PRSCDU1-VGG303, is a rinsate sample collected from DU1 following the collection of the triplicate grass sample.

Each sample that is collected in the field will be labeled for future identification. Sample labels will be filled out as completely as possible by a member of the sampling team. All sample labels will be filled out using waterproof ink. At a minimum, each label will contain the following information:

- Sampler's initials;
- Sampler's company affiliation;
- Site location;
- Sample identification number;
- Date and time of sample collection;
- Analyses required;
- Sample type; and
- Sampler’s signature/initials.

4.5 Sampling Quality Assurance and Control

This section describes the QC policies and procedures to ensure that the data collected in the field and analyzed by the laboratory are of appropriate quality to meet the sampling objectives.

4.5.1 Field Quality Control

The field QC will consist of the collection of QC samples, decontamination of field sampling equipment, and adherence to SOPs. Equipment rinsates samples and field duplicate samples will be collected to evaluate the accuracy and reproducibility of the field sampling methods. Data collected in the field may lack reproducibility due to natural variability and/or the field sampling methods. One duplicate and one equipment blank sample will be collected for every 20 primary surface water, sediment and groundwater, or no less than one per sample event if the number of samples collected in a sample event is less than 20 samples. For soil and vegetation samples, duplicates will be collected at the rate of one DU per sampling event, and equipment blank samples will be collected at the rate of one per DU per sampling event.

4.5.2 Laboratory Quality Control

The analytical methods selected will ensure that laboratory analysis is sufficiently sensitive, accurate and precise to meet the objectives of the sampling. The commercial laboratories used will perform the requested analyses in accordance with requested methods and will operate under an internal Quality Assurance (QA) Management Plan. At a minimum, the laboratory will provide the following information to support their analysis results for each parameter analyzed and allow for evaluating compliance with Data Quality Indicators (presented below):

- Chain of custody record, sample collection date, sample preservation, sample analysis date, and holding times;
- Sample preparation and analytical methods;
- Method detection limit (MDL) and Reporting or practical quantitation limits;
- Method and laboratory blanks;
- Instrument calibration, initial and continuous calibration blanks (ICB and CCB), initial calibration verification (ICV), serial dilutions, internal standards, and interference check samples;
- Laboratory duplicate results and Laboratory control standard (LCS) recovery; and
- Matrix spike (MS) and Matrix spike duplicate (MSD) recovery.

The laboratories will provide complete raw data packages with all sample preparation and instrument calibration records for evaluation.

4.6 Data Quality Indicators

The Data Quality Indicators (DQIs) for the field and laboratory measurement parameters collected as part of compliance monitoring are identical to the DQIs established for the RI. The acceptance criteria and quantitative or qualitative goals (e.g., control limits) for accuracy, precision, completeness, representativeness and comparability as summarized in the Final RI SAP (NewFields 2008b).

4.7 Quality Assessment and Corrective Actions

Field and laboratory procedures will be reviewed by persons having no direct responsibilities for the activities being performed to determine conformance with technical and QA procedures. Corrective actions will be implemented for each nonconformance identified.

The Field Team Leader will be responsible for taking and reporting required corrective action during field activities. A description of deviations from the PRSC and any corrective action will be entered in the field notebook.

Laboratory data for sample analyses will be validated before results are reported. The data validation report will confirm that all requested analyses were performed using the procedures specified in this plan. The data validation report will also include evaluation of data quality using results from the laboratory's data quality analyses, including analytical duplicates, matrix spike samples, and control samples or standards. Any deviations from this plan or concerns regarding data quality will be resolved by working with the laboratory, which may include request for reanalysis of samples. The Laboratory QA Manager will be responsible for taking required corrective actions in response to any problems with data quality during laboratory activities.

4.8 Monitoring Reporting Requirements

Simplot will document all details that would be necessary to recreate the monitoring and sampling activities.

Results for monitoring and sampling will be summarized annually. Photo documentation of the pile conditions will also be included in each report. Prior sampling locations and DU-grid locations will be recorded using portable GPS units. Field forms included in the referenced SOPs will be completed to support general note taking in logbooks. Annual reports will be submitted by December 31 for each year that sampling occurs.

5.0 SCHEDULE

Contingent on agency approval, the PRSC activities are anticipated to begin in the spring of 2015. The requirement for this PRSC Plan will end upon the Effective Date of Consent Decree signed by Simplot for implementation of remedial action at Conda, providing that the Consent Decree includes site control requirements equivalent to those in this PRSC Plan.

The schedule of events will be as follows:

- Inspections – April/May
    - Inspection Summary Report - June
- Inspections – July/August
    - Inspection Summary Report - September
- Inspections – September/October
    - Inspection Summary Report - November
- Critical maintenance activities – As soon as necessary
- Summary reports with inspection observations – 30 days following the inspections
- Groundwater and surface water sampling – April/May for the spring sampling, July/August for the summer sampling, and September/October for the fall sampling;
- Groundwater and surface sampling summary reports – 60 days after data validation reports are completed
- Herbicide application (as necessary) – May/June for the spring application and September/October for the fall application;
- Non-critical maintenance – June/August (when the ground is adequately dry);
- Soil and Vegetation sampling – August/September;
- Soil and Vegetation sampling summary report – 60 days after data validation report are completed
- Annual PRSC summary report (including sampling data) – By March 1 of the year following each year's monitoring

Final copies of the above-mentioned reports will be submitted within 30 to 45 calendar days of receipt of Agency comments on the documents or resolution of Agency comments (if resolution of comments is necessary).

6.0 REFERENCES CITED

Desborough, G.A. and F.G. Poole, 1983. Metal concentrations in some marine black shales of the United States. In Cameron Volume on Unconventional Mineral Deposits, W.C. Shanks, ed., American Institute of Mining, Metallurgical and Petroleum Engineers, Inc., Guinn Printing Inc., Hoboken N.J., p. 99–110.

Formation Environmental, LLC. 2015. Conda/Woodall Mountain Mine Pedro Creek NTCRA Construction Summary Report, Idaho prepared for J.R. Simplot Company, March 2015

Formation Environmental, LLC. 2014. Conda/Woodall Mountain Mine Pedro Creek NTCRA Interim Construction Summary Report, Idaho prepared for J.R. Simplot Company, January 2014

Formation Environmental, LLC. 2013a. Conda/Woodall Mountain Mine Final Design and Implementation Plan, Idaho prepared for J.R. Simplot Company, May 2013

Formation Environmental, LLC. 2013b. Conda/Woodall Mountain Mine Final Field-Scale Plant Uptake Pilot Study Construction Summary Report, Idaho prepared for J.R. Simplot Company, September 2013

Formation Environmental, LLC. 2011. Conda/Woodall Mountain Mine Final Field-Scale Plant Uptake Pilot Study (FSPS) Work Plan, Idaho prepared for J.R. Simplot Company, October 2011

Formation Environmental, LLC. 2010. Conda/Woodall Mountain Mine Draft Engineering Evaluation/Cost Analysis, Idaho prepared for J.R. Simplot Company, May 2010.

IDEQ 2012a – Administrative Settlement Agreement and Order on Consent for Performance of A Removal Action at Conda/Woodall Mountain Phosphate Mine, Pedro Creek Overburden Disposal Area. September 2012.

IDEQ 2012b – Statement of Work for the Non Time-Critical Removal Action at the Pedro Creek Overburden Disposal Area at the Conda/Woodall Mountain Phosphate Mine. August 2012.

ITRC 2012 – Incremental Sampling Methodology. February 2012.

NewFields. 2008a. Final Conda/Woodall Mountain Mine RI/FS Work Plan. Prepared for the J.R. Simplot Company. December.

NewFields. 2008b. Final Conda/Woodall Mountain Mine RI/FS Sampling and Analysis Plan. Prepared for the J.R. Simplot Company. December.

United States Environmental Protection Agency. 2006. Guidance of Systematic Planning Using the Data Quality Objective Process, February 2006.

U.S. Forest Service (USFS) and Bureau of Land Management (BLM). 1999. *Sampling Vegetation Attributes*. Interagency Technical Reference, BLM/RS/ST-96/002+1730 (1996; revised in 1997 and 1999).

United States Geological Survey (USGS). 1977. National Handbook of Recommended Methods for Water-Data Acquisition, Reston, Virginia, 1977.

TABLES

Table 3-1
Approved Seed Mixture for Reclamation at NTCRA, FSPS and Dinwoody Borrow Areas

Common Name	Scientific Name	Plant Type	Cultivars to consider on original table	To Request from Seed Vendor[3] "blue-tag" certified cultivars only	PLS/lb[1]	Lbs PLS/ac	Percentage of lbs PLS/ac
Pubescent Wheatgrass (Intermediate wheatgrass)	*Thinopyrum intermedium*	Grass	Luna	**Chief**	100,000	7.60	29%
Mountain Brome	*Bromus marginatus*	Grass	Bromar, Garnet	**Bromar**	64,000	6.20	23%
Western Wheatgrass	*Pascopyrum smithii*	Grass	Recovery, Arriba	**Arriba**	110,000	4.60	17%
Slender Wheatgrass	*Elymus trachycaulus*	Grass	FirstStrike, Revenue	**Revenue**	159,000	3.80	14%
Orchard grass	*Dactylis glomerata*	Grass	Paiute	**Paiute**	427,200	1.50	6%
Sheep Fescue	*Festuca ovina*	Grass	Marco Polo, Black Sheep	**Covar**	680,000	1.50	6%
Sandberg Bluegrass (Big bluegrass)	*Poa secunda*	Grass	Sherman	**Sherman**	1,047,000	0.80	3%
Tufted Hairgrass	*Deschampsia cespitosa*	Grass	Nortran	**Nortran**	1,500,000	0.60	2%
					Total	**26.60**	**100%**

Notes:

ac - acre

sq ft - square foot

Lbs PLS/ac- pounds of pure live seed/acre (broadcast rate)

Based on Table 4-2 from Final 90 Percent Design and Implementation Plan for Pedro Creek Basin Overburden Disposal Area Non-Time-Critical Removal Action (NTCRA) (Formation Environmental 2013).

1 - Approximate seed/pound (lb) info obtained from Granite Seed Company (2013) - actual value depends on seed batch.

Sources:

Granite Seed Company. 2013. Seeds (online inventory information). Available at http://www.graniteseed.com/ (Accessed February 2013).

Table 3-2
Sedimentation Basin Volume Summary for NTCRA, FSPS and Dinwoody Borrow Areas

Basin Location	Design Volume (cf)	As-Built Volume (cf)
NTCRA		
Northeast Basin - All Cells	61,000	61,000
NES-5 Seep Collection Pond	35,000	35,000
East Basin - All Cells	35,000	35,000
NES-7 Seep Collection Pond	2,400	2400
Southeast Sedimentation Basin	47,000	299,000
Southwest Sedimentation Basin	8,600	13,900
West Pit Infiltration Basin	NA	NA
FSPS		
FSPS - Sedimentation Basin	26,900	27,000
FSPS Seep Collection Pond	2,500	2,500
Dinwoody Formation Borrow Area		
Northern Sedimentation Basin	5,500	5,500
Southern Sedimentation Basin	41,000	41,000

Notes:
NA - No construction design criteria
cf - cubic feet

Table 4-1
Decision Inputs and Decision Rules by Media Type

Media	Decision Inputs	Decision Rules
Groundwater	Direction of groundwater flow in the alluvium/colluvium and Dinwoody Formation aquifers	
	Concentrations of selenium and other COPCs in shallow groundwater (alluvium/colluvium aquifer)	If shallow groundwater extracted from a well has COPC concentrations above MCLs that remain the same or are increasing over time; then evaluate modifications to the NTCRA and FSPS piles.
	Concentrations of selenium and other COPCs in the uppermost-consolidated -formation groundwater (Dinwoody Formation aquifer)	If deeper groundwater extracted from the Dinwoody Formation wells have COPC concentrations above MCLs that are increasing over time; then evaluate modifications to the NTCRA and FSPS piles.
Surface Water	Selenium and other COPC concentrations in Pedro Creek surface water downstream of the NTCRA and FSPS piles during a range of seasonal flow conditions	If selenium and other COPC concentrations above AWQCs in Pedro Creek surface water remain the same or are increasing over time; then evaluate modifications to the NTCRA and FSPS piles.
	Selenium and other COPC concentrations in the seep collection ponds, sedimentation basins water, and stock ponds	If selenium and other COPC concentrations above AWQCs in the seep collection ponds and sedimentation basins remain the same or are increasing over time; then evaluate modifications to the NTCRA and FSPS piles
		If selenium and other COPC concentrations above AWQCs in the stock ponds remain the same or are increasing over time; then evaluate modifications to the NTCRA and FSPS piles
Sediment	Selenium and other COPC concentrations in Pedro Creek and stock pond sediments downstream of the NTCRA and FSPS piles	If COPC concentrations in Pedro Creek and stock pond sediments remain the same or increase over time, relative to conditions prior to the regrade and cover placements; then evaluate adjustments to the NTCRA and FSPS piles.
	Selenium and other COPC concentrations in sediment collected from sedimentation basins	If COPC concentrations in sedimentation basin sediments are increasing over time; then evaluate adjustments to the NTCRA and FSPS piles.
Soil	Selenium and other COPC concentrations in surface and root-zone soil from the cover	If COPC concentrations in the soil cover on the piles are exceeding Conda-specific PRGs (based on results of the site-specific risk assessments), then evaluate adjustments to the NTCRA and FSPS piles.
Vegetation	Selenium and other COPC concentrations in vegetation collected from the soil cover on the piles	If COPC concentrations in composite vegetation samples are increasing over time or exceeding currently acepted chronic screening-level concentrations potentialy posing effects (subject to change based on results of the site-specific risk assessment), then evaluate modifications to the NTCRA and FSPS piles.

Table 4-2
Comparison of Historic Concentrations

Location Name	Media	Total Selenium						Total Arsenic						Total Cadmium						Total Chromium					
		Pre Construction			During			Pre Construction			During			Pre Construction			During			Pre Construction			During		
		2001-2011			2012	2013	2014	2001-2011			2012	2013	2014	2001-2011			2012	2013	2014	2001-2011			2012	2013	2014
		Min	Max	Avg	Max	Max	Max	Min	Max	Avg	Max	Max	Max	Min	Max	Avg	Max	Max	Max	Min	Max	Avg	Max	Max	Max
NTCRA area vegetation [1] - grasses	VG	0.5	155	26.2	na	na	na	na			na	na	na	0.42	1.5	0.89	na	na	na	0.74	6.1	2.68	na	na	na
NTCRA area vegetation [1] - forbs	VG	98.2	106	102.1	na	na	na	na			na	na	na	2.1	2.1	2.10	na	na	na	0.44	0.44	0.44	na	na	na
NTCRA area vegetation [1] - browse	VG	6.56	32.8	19.9	na	na	na	0.17	0.99	0.54	na	na	na	0.656	4.53	2.23	na	na	na	0.29	0.3	0.30	na	na	na
NTCRA area vegetation [1] - forage	VG	2.9	140	64.7	na	na	na	2.85	2.85	2.85	na	na	na	0.534	1.6	1.07	na	na	na	0.4	3.6	2.00	na	na	na
NTCRA area vegetation [1] - accumulator (forage)	VG	5.5	143	44.1	na	na	na	0.39	3.52	1.30	na	na	na	0.464	2.9	1.52	na	na	na	0.2	6.4	1.85	na	na	na
NTCRA area vegetation [1] - accumulator (forb)	VG	17.7	168	54.5	na	na	na	0.78	3.16	1.89	na	na	na	0.488	2.4	1.52	na	na	na	0.3	1.1	0.58	na	na	na
NTCRA area overburden [2]	SL	1.3	717	70.54	na	na	na	3.5	39.7	18.33	na	na	na	1.5	101	24.64	na	na	na	27.6	843	451.68	na	na	na
NTCRA area Dinwoody cover	SL		na		1.9	na	na		na		na	na	na		na		na	na	na		na		na	na	na
FSPS area vegetation [3] - grasses	VG	0.15	67.3	34.3	na	na	na		na		na	na	na	0.34	1.9	1.35	na	na	na	0.48	4.4	2.36	na	na	na
FSPS area vegetation [3] - forbs	VG	19.3	46.3	28.7	na	na	na		na		na	na	na	0.72	5.2	2.96	na	na	na	5.3	6.2	5.75	na	na	na
FSPS area vegetation [3] - browse	VG	48.2	58.6	53.4	na	na	na		na		na	na	na	0.53	0.53	0.53	na	na	na	0.48	0.48	0.48	na	na	na
FSPS area vegetation [3] - accumulator (forb)	VG	0.33	555	315.1	na	na	na		na		na	na	na	7.5	7.5	7.50	na	na	na	1.4	1.4	1.40	na	na	na
FSPS area overburden [4]	SL	0.53	156	59.39	309	na	na		na		28	na	na	1.9	22.7	11.75	26	na	na	34.3	668	330.03	407	na	na
FSPS non-study area Dinwoody cover [5]	SL		na		6.4	na	na		na		5	na	na		na		5	na	na		na		55	na	na
NES-5	SW	0.535	6.89	3.48	4.47	4.44	8.95	0.0892	0.252	0.1673	na	na	0.0016	0.0089	0.013	0.01	na	na	0.021	0.0046	0.0136	0.01	na	na	0.0035
	SD	124	225	174.50	na	na	na	18.7	23.4	21.05	na	na	na	27.4	30.2	28.80	na	na	na	364	609	486.5	na	na	na
NE Seep Pond	SW		na		na	3.01	8.55		na		na	na	0.0016		na		na	na	0.019		na		na	na	0.0015
NE Sed Basin [6]	SW		na		na	1.74	2.29		na		na	na	0.0021		na		na	na	0.0012		na		na	na	0.0055
NES-7	SW		na		na	3.35	6.57		na		na	na	0.00095		na		na	na	0.0031		na		na	na	0.003
East Seep Pond	SW		na		na	na	na		na		na	na	na		na		na	na	na		na		na	na	na
E Sed Basin [7]	SW		na		na	0.172	1.8		na		na	na	0.0023		na		na	na	0.00014		na		na	na	0.0043
NQ-33	SL		na		na	na	23.5		na		na	na	8.1		na		na	na	11		na		na	na	180
NQ-34	SL		na		na	na	16.1		na		na	na	7.4		na		na	na	6.3		na		na	na	85.7
NT10-1	SL		na		na	na	14.7		na		na	na	6.4		na		na	na	6.2		na		na	na	91.6
NT10-2	SL		na		na	na	17.7		na		na	na	7.4		na		na	na	8.4		na		na	na	118
NT10-3	SL		na		na	na	17		na		na	na	6.8		na		na	na	8.4		na		na	na	108
NT10-4	SL		na		na	na	12.2		na		na	na	5.9		na		na	na	6.1		na		na	na	75.3
NT10-5	SL		na		na	na	29.4		na		na	na	12		na		na	na	8.6		na		na	na	240
NT11-1	SL		na		na	na	24.6		na		na	na	11		na		na	na	8		na		na	na	114
NT11-2	SL		na		na	na	16		na		na	na	7.3		na		na	na	6.6		na		na	na	88.2
NT11-3	SL		na		na	na	16.6		na		na	na	8		na		na	na	6.3		na		na	na	86.1
FSPS Sed Basin	SW		na		na	0.673	0.406		na		na	na	0.0014		na		na	na	0.000031		na		na	na	0.0118
FSPS Seep	SW		na		na	1.52	0.854		na		na	na	0.00056		na		na	na	0.0017		na		na	na	0.0015
North Borrow Sed Basin	SW		na		na	0.0023	na		na		na	na	na		na		na	na	na		na		na	na	na
South Borrow Sed Basin	SW		na		na	na	na		na		na	na	na		na		na	na	na		na		na	na	na
SE Infiltration Basin	SW		na		na	na	0.00092		na		na	na	0.0031		na		na	na	0.00051		na		na	na	0.0134
SW Infiltration Basin	SW		na		na	na	na		na		na	na	na		na		na	na	na		na		na	na	na
West Pit Infiltration Basin	SW		na		na	na	na		na		na	na	na		na		na	na	na		na		na	na	na
PC-1	SW	0.004	0.138	0.03	0.0202	0.0346		0.0013	0.0046	0.002433	na	na		0.00007	0.00007	0.0001	na	na		0.0011	0.0017	0.001	na	na	
	SD	1.2	6.4	3.80	na	na	na	4.1	5.2	4.65	na	na	na	0.82	2.6	1.71	na	na	na	25.4	28.6	27.00	na	na	na
PC-2	SW	0.0017	0.365	0.04	0.0045	0.046	0.053	0.0003	0.004	0.002	na	na	0.0016	0.00005	0.0003	0.0002	na	na	0.00015	0.00065	0.001	0.001	na	na	0.0018
	SD	13.2	29.6	21.4	na	na	na	3.2	5.8	4.5	na	na	na	3.2	4.4	3.80	na	na	na	33.5	66.2	49.9	na	na	na
PC-4	SW	1.8	3.5	2.39	2.9	2.65	0.71	0.0933	0.0933	0.0933	na	na	0.0016	0.0026	0.0026	0.0026	na	na	0.0013		nd		na	na	0.0018
	SD	88.4	88.4	88.4	na	na	na	12.9	12.9	12.9	na	na	na	15.4	15.4	15.40	na	na	na	261	261	261	na	na	na
PC-5	SW	1.13	4.08	2.33	3.19	2.92	1.81	0.0585	0.094	0.07625	na	na	0.0016	0.0019	0.0021	0.002	na	na	0.0021		nd		na	na	0.0018
	SD	227	227	227	na	na	na	12.7	12.7	12.7	na	na	na	19.6	19.6	19.60	na	na	na	301	301	301	na	na	na
PC-6	SW	2.13	2.13	2.13	na	na	na		na		na	na	na		na		na	na	na		na		na	na	na
	SD	65.1	65.1	65.1	na	na	na	15.4	15.4	15.4	na	na	na	15.2	15.2	15.20	na	na	na	259	259	259	na	na	na
PC-7	SD	155	155	155	na	na	na	21.7	21.7	21.7	na	na	na	20.5	20.5	20.50	na	na	na	298	298	298	na	na	na
PCT6-1	SW		na		na	na	na		na		na	na	na		na		na	na	na		na		na	na	na
PCP-2	SW	0.0066	0.13	0.04	0.0373	0.212	0.264	0.0031	0.0052	0.004133	na	na	0.0016	0.00012	0.00017	0.0001	na	na	0.00015	0.001	0.0028	0.002	na	na	0.0018
	SD	4.9	4.9	4.9	na	na	na	4	4	4	na	na	na	0.65	0.65	0.65	na	na	na	19.8	19.8	19.80	na	na	na
Hoorah Hollow	SW	0.00035	0.004	0.001	na	na	na		nd		na	na	na	0.000068	0.00015	0.0001	na	na	na	0.0017	0.0026	0.002	na	na	na
	SD	0.81	0.81	0.81	na	na	na	2.6	2.6	2.6	na	na	na	2.8	2.8	2.80	na	na	na	28.3	28.3	28.30	na	na	na
Hoorah Hollow pond	SW	0.00033	0.0014	0.001	0.00055	0.00077	0.00068		nd		na	na		0.000052	0.0002	0.0001	na	na		0.0024	0.0042	0.003	na	na	
	SD	1.7	2.4	2.05	na	na	na	2	2.5	2.25	na	na	na	3.5	3.7	3.60	na	na	na	29.2	29.2	29.20	na	na	na
GW-28	GW	0.745	1.85	1.24	2.26	9.43	1.28	0.034	0.065	0.0495	na	na	0.00041	0.00025	0.00026	0.00026	na	na	0.00077		nd		na	na	0.0018
GW-29	GW	0.0275	0.0349	0.03	0.0319	0.0343	0.0356	0.0011	0.0019	0.001567	na	na	0.00037	0.00006	0.00006	0.00006	na	na	0.000031	0.001	0.0033	0.002	na	na	0.0018
GW-30	GW	0.0014	0.058	0.01	0.062	0.064	0.008	nd	0.0026	na	na	na	0.00056	0.00016	0.0003	0.00023	na	na	0.000081	0.0026	0.0025	0.012	na	na	0.0018
GW-41	GW		8.1		na	1.42	2.92		na		na	0.058	0.00062		na		na	0.023	0.0024		na		na	0.666	0.0015
GW-42	GW		na		na	0.442	0.42		na		na	0.012	0.00038		na		na	0.00064	0.000031		na		na	0.0958	0.0017
GW-44	GW		na		na	0.603	0.126		na		na	0.0088	0.00031		na		na	0.00027	0.000031		na		na	0.0509	0.0015
GW-45	GW		na		na	na	0.376		na		na	na	0.00079		na		na	na	0.0002		na		na	na	0.0037
GW-46	GW		na		na	0.129	0.259		na		na	0.0059	0.00031		na		na	0.00033	0.000031		na		na	0.0349	0.0015

Notes:

All units are mg/kg or mg/L. nd - not detected na - not available (i.e., samples not collected, or analyte not evaluated) Min Det - minimum detected concentration; Max Det - maximum detected concentration; Avg Det - average detected concentration

1 - 2001-2011 NTCRA locations: NQ-04, NT5-01 through NT5-06, NT5-09, NT9-02 through NT9-04, UD. Vegetation samples include grasses, forbs, browse, forb samples with selenium-accumulating species, and forage samples with selenium-accumulating species (e.g., alfalfa, aster, and milkvetch).

2 - 2001-2011NTCRA locations: NQ-04, NQ-19, NQ-20, NQ-21, NQ-22, NQ-23, NQ-24, NT5-01 through NT5-06, NT5-09, NT9-02 through NT9-04, PCO-17 through PCO-22. any surface or subsurface samples included.

3 - 2001-2011 FSPS locations: NT7-02, NT7-03. Vegetation samples include grasses, forbs, browse, or forb samples with selenium-accumulating species (aster). Does not include unwashed sample results.

4 - 2001-2011 FSPS locations: NT7-02, NT7-03. any surface or subsurface samples included. 2012 are from overburden sampled just prior to construction of FSPS test plots (21 samples for selenium; 4 samples for other metals).

5 - Dinwoody results from salvaged topsoil upgradient of FSPS pile (22 samples for selenium) and from the north borrow area (264 samples for selenium analyses and 10 composited samples from piles 1 through 199 for other metals). Does not present 2012 or 2013 results from FSPS test plots.

6 - Results include samples collected from the three cells that make up the NE Sed Basin (north cell, central cell, and south cell).

7 - Results include samples collected from the three cells that make up the East Sed Basin ((north cell, central cell, and south cell).

Table 4-2
Comparison of Historic Concentrations

Location Name	Media	Total Vanadium						Total Zinc					
		Pre Construction			During			Pre Construction			During		
		2001-2011			2012	2013	2014	2001-2011			2012	2013	2014
		Min	Max	Avg	Max	Max	Max	Min	Max	Avg	Max	Max	Max
NTCRA area vegetation [1] - grasses	VG	0.7	4.9	2.10	na	na	na	60	99.9	82.9	na	na	na
NTCRA area vegetation [1] - forbs	VG	0.31	0.31	0.31	na	na	na	51.2	51.2	51.2	na	na	na
NTCRA area vegetation [1] - browse	VG	0.22	0.26	0.24	na	na	na	52.8	156	93.8	na	na	na
NTCRA area vegetation [1] - forage	VG	0.29	1.7	1.00	na	na	na	68.1	228	148.1	na	na	na
NTCRA area vegetation [1] - accumulator (forage)	VG	0.19	5.3	1.38	na	na	na	19.6	179	69.8	na	na	na
NTCRA area vegetation [1] - accumulator (forb)	VG	0.23	0.94	0.45	na	na	na	12.6	312	106.6	na	na	na
NTCRA area overburden [2]	SL	36.2	1070	272.24	na	na	na	122	1620	848.3	na	na	na
NTCRA area Dinwoody cover	SL	na			na	na	na	na			na	na	na
FSPS area vegetation [3] - grasses	VG	0.49	2.7	1.53	na	na	na	33	51.9	45.1	na	na	na
FSPS area vegetation [3] - forbs	VG	3.1	3.6	3.35	na	na	na	113	149	131.0	na	na	na
FSPS area vegetation [3] - browse	VG	0.34	0.34	0.34	na	na	na	31.7	31.7	31.7	na	na	na
FSPS area vegetation [3] - accumulator (forb)	VG	0.93	0.93	0.93	na	na	na	278	278	278.0	na	na	na
FSPS area overburden [4]	SL	33.3	224	127.93	228	na	na	129	904	509.0	1130	na	na
FSPS non-study area Dinwoody cover [5]	SL	na			91	na	na	na			165	na	na
NES-5	SW	0.0172	0.0195	0.02	na	na	0.0097	0.423	0.689	0.51	na	na	1.75
	SD	182	325	253.5	na	na	na	504	1290	897.0	na	na	na
NE Seep Pond	SW	na			na	na	0.001	na			na	na	0.0023
NE Sed Basin [6]	SW	na			na	na	0.0097	na			na	na	0.021
NES-7	SW	na			na	na	0.0066	na			na	na	0.0023
East Seep Pond	SW	na			na	na	na	na			na	na	na
E Sed Basin [7]	SW	na			na	na	0.0068	na			na	na	0.0093
NQ-33	SL	na			na	na	105	na			na	na	325
NQ-34	SL	na			na	na	72.8	na			na	na	261
NT10-1	SL	na			na	na	72.5	na			na	na	238
NT10-2	SL	na			na	na	80.3	na			na	na	262
NT10-3	SL	na			na	na	86.5	na			na	na	250
NT10-4	SL	na			na	na	65.1	na			na	na	177
NT10-5	SL	na			na	na	118	na			na	na	440
NT11-1	SL	na			na	na	106	na			na	na	430
NT11-2	SL	na			na	na	75.6	na			na	na	241
NT11-3	SL	na			na	na	79.4	na			na	na	280
FSPS Sed Basin	SW	na			na	na	0.0124	na			na	na	0.0943
FSPS Seep	SW	na			na	na	0.0043	na			na	na	0.0395
North Borrow Sed Basin	SW	na			na	na	na	na			na	na	na
South Borrow Sed Basin	SW	na			na	na	na	na			na	na	na
SE Infiltration Basin	SW	na			na	na	0.0151	na			na	na	0.0298
SW Infiltration Basin	SW	na			na	na	na	na			na	na	na
West Pit Infiltration Basin	SW	na			na	na	na	na			na	na	na
PC-1	SW	0.0026	0.0051	0.004	na	na		nd			na	na	
	SD	32.7	33	32.85	na	na	na	90.9	101	95.95	na	na	na
PC-2	SW	0.0012	0.0039	0.002	na	na	0.0017	0.003	0.0125	0.0062	na	na	0.004
	SD	27.5	48.8	38	na	na	na	135	240	187.5	na	na	na
PC-4	SW	0.0028	0.0028	0.00	na	na	0.0051	0.0229	0.0229	0.0229	na	na	0.0258
	SD	176	176	176	na	na	na	605	605	605.0	na	na	na
PC-5	SW	0.001	0.0023	0.0017	na	na	0.004	0.016	0.0277	0.0219	na	na	0.004
	SD	179	179	179	na	na	na	619	619	619.0	na	na	na
PC-6	SW	na			na	na	na	na			na	na	na
	SD	167	167	167	na	na	na	532	532	532	na	na	na
PC-7	SD	218	218	218	na	na	na	887	887	887	na	na	na
PCT6-1	SW	na			na	na	na	na			na	na	na
PCP-2	SW	0.0011	0.0069	0.0039	na	na	0.0017	0.0064	0.0108	0.01	na	na	0.0037
	SD	23.4	23.4	23.40	na	na	na	81	81	81.00	na	na	na
Hoorah Hollow	SW	0.001	0.0027	0.002	na	na	na	0.0034	0.0046	0.004	na	na	na
	SD	25.5	25.5	25.50	na	na	na	112	112	112.00	na	na	na
Hoorah Hollow pond	SW	0.0011	0.0045	0.002	na	na		0.0075	0.0095	0.0085	na	na	
	SD	35.4	35.4	35.40	na	na	na	124	135	129.50	na	na	na
GW-28	GW	nd			na	na	0.0017	nd			na	na	0.0032
GW-29	GW	0.00092	0.0051	0.003	na	na	0.0017	0.0083	0.0083	0.01	na	na	0.0032
GW-30	GW	0.0025	0.029	0.010	na	na	0.0017	0.01	0.051	0.03	na	na	0.0032
GW-41	GW	na			na	0.606	0.0039	na			na	1.69	0.027
GW-42	GW	na			na	0.0874	0.0025	na			na	0.217	0.0085
GW-44	GW	na			na	0.0635	0.0016	na			na	0.13	0.0045
GW-45	GW	na			na	na	0.0046	na			na	na	0.0128
GW-46	GW	na			na	0.0345	0.0012	na			na	0.0778	0.0031

Notes:

All units are mg/kg or mg/L. nd - not detected na - not available (i.e., samples not collected, or analyte not evaluated) Min Det - minimum detected concentration; Max Det - maximum detected concentration; Avg Det - average detected concentration

1 - 2001-2011 NTCRA locations: NQ-04, NT5-01 through NT5-06, NT5-09, NT9-02 through NT9-04, UD. Vegetation samples include grasses, forbs, browse, forb samples with selenium-accumulating species, and forage samples with selenium-accumulating species (e.g., alfalfa, aster, and milkvetch).

2 - 2001-2011NTCRA locations: NQ-04, NQ-19, NQ-20, NQ-21, NQ-22, NQ-23, NQ-24, NT5-01 through NT5-06, NT5-09, NT9-02 through NT9-04, PCO-17 through PCO-22. any surface or subsurface samples included.

3 - 2001-2011 FSPS locations: NT7-02, NT7-03. Vegetation samples include grasses, forbs, browse, or forb samples with selenium-accumulating species (aster). Does not include unwashed sample results.

4 - 2001-2011 FSPS locations: NT7-02, NT7-03. any surface or subsurface samples included. 2012 are from overburden sampled just prior to construction of FSPS test plots (21 samples for selenium; 4 samples for other metals).

5 - Dinwoody results from salvaged topsoil upgradient of FSPS pile (22 samples for selenium) and from the north borrow area (264 samples for selenium analyses and 10 composited samples from piles 1 through 199 for other metals). Does not present 2012 or 2013 results from FSPS test plots.

6 - Results include samples collected from the three cells that make up the NE Sed Basin (north cell, central cell, and south cell).

7 - Results include samples collected from the three cells that make up the East Sed Basin ((north cell, central cell, and south cell).

Table 4-3
Summary of Applicable and/or Relevant and Appropriate Requirements

	Standard, Limitation, or Requirement Criteria	Citation	Description	Comments	Category	Document Location Where ARAR is Addressed
Federal						
Chemical-Specific	National Primary Drinking Water Regulations	40 C.F.R. Part 141	Establishes health-based standards (Maximum Contaminant Levels, MCLs) for public water systems	MCLs are not applicable to this removal action because the action does not involve a public water system. However, they are relevant and appropriate because the groundwater is a potential drinking water source. Because this removal action is limited in scope, the removal action objective (RAO) is to reduce contaminant concentrations in the groundwater, not to meet the MCLs. Post removal action groundwater monitoring will be compared against the MCLs; therefore, these requirements are relevant and appropriate.	Relevant and Appropriate	Sec. 3.1; Sec. 3.2.1; Sec. 8.3; Appendix J
	Water Quality Standards	40 C.F.R. Part 131	Sets criteria for water quality based on toxicity to aquatic organisms and human health	Relevant and Appropriate	Relevant and Appropriate	Sec. 3.1; Sec. 8.3; Appendix J
	National Recommended Water Quality Criteria November 2002	33 U.S.C. §1314(a)	Recommended aquatic water quality criteria (AWQC) for the protection of aquatic life and human health in surface water. The National Recommended Ambient Water Quality Criteria (AWQC) are guidance established by the EPA for evaluating toxics effects on human health and aquatic organisms.	Federal Ambient Water Quality Criteria are not applicable, but would be relevant and appropriate if there is no state standard for any of the Contaminants of Potential Concern (COPC) identified in the SI/EE/CA. They would also be relevant and appropriate if there is a state standard but it is less stringent than the AWQC. The AWQC for cadmium for the chronic criterion is more stringent than the state standard based on a hardness of 100 mg/l. For all other COPCs, the AWQC and the state standard are the same.	Relevant and Appropriate	Sec. 3.1; Sec. 8.3; Appendix J
	National Pollutant Discharge Elimination System (NPDES) Permit Regulations	Clean Water Act 33 USC § 1342 and 40 CFR § 122 to 125	Permitting requirements for the discharge of "pollutants" from any "point source". EPA considers discharges from waste dumps (springs and seeps at the base of the dumps) as point sources. The NPDES regulations establish requirements for point source discharges and stormwater runoff. These regulations are applicable for any point source discharge of contaminated water, stormwater runoff at the Site, and management of stormwater runoff during construction where the construction site involves 1 acre or more. EPA considers discharges from waste dumps (springs and seeps at the base of the dumps) to be point sources.	The removal action objective (RAO) is to reduce contaminant concentrations in the groundwater and surface waters, not to meet the standards. BMPs will be in place to manage storm water runoff at the Site during implementation.	Applicable	Sec. 4.2.6; Sec. 6.2; Sec. 6.5.1; Sec. 6.5.3; Appendix E; Appendix H
Action-Specific	Surface Mining Control and Reclamation Act	30 U.S.C. § 1201- 1326; 30 C.F.R. Part 816.43, 45-47, and 111; 30 C.F.R. Part 784	Permanent program performance standards – surface mining activities. Minimum requirements for reclamation and operations.	Not applicable since the site is not a coal mine. However certain requirements may be relevant and appropriate to the design of the cap and run-on/run-off control systems	Relevant and Appropriate	Sec. 3.2.2; Sec. 6.14
	National Emission Standards for Hazardous Air Pollutants	40 CFR 61	Recommended air pollutant restrictions	The State of Idaho's air quality standards govern air quality at this site. Therefore, the NESHAP requirements are relevant and appropriate.	Relevant and Appropriate	Sec. 3.2.1; Sec. 3.2.2; Sec. 6.5.1
	Migratory Bird Treaty Act	16 U.S.C. §§ 703 et seq.	Taking, killing, possessing migratory game unlawful	The removal action is not expected to impact migratory birds protected by this act. If migratory birds are impacted during implementation, actions would be taken to meet the substantive requirements.	Applicable	Sec. 3.2.2; Sec. 6.5.2; Appendix K
	Bald and Golden Eagle Protection Act	16 U.S.C. 668-668c	Prohibits taking, killing, selling or possessing Bald or Golden Eagles	The removal action is not expected to impact eagles protected by this act. If eagles are impacted during implementation, actions would be taken to meet the substantive requirements.	Applicable	Sec. 3.2.2; Sec. 6.5.2; Appendix K
	Endangered Species Act	16 U.S.C. §§ 1531 et seq. 50 C.F.R. Part 402 40 C.F.R. § 6.302	Requires consultation with ESA Services charged with protecting listed species, if listed species could be impacted by the actions.	No listed species could be impacted by the project. The substantive requirements of ESA will be complied with through completion of a Determination of No Effects.	Applicable	Sec. 3.2.2
	National Pollutant Discharge Elimination System (NPDES) Permit Regulations for Stormwater	40 CFR § 122 to 123	Regulates erosion and sediment control and stormwater management at construction sites.	The substantive requirements of a Stormwater Pollution Prevention Plan will be met through implementation of Best Management Practices to control erosion and sediments during construction.	Applicable	Sec. 4.2.6; Sec. 6.2; Sec. 6.5.1; Sec. 6.5.3; Appendix E; Appendix H
	Clean Air Act National Primary and Secondary Ambient Air Quality Standards (NAAQSs)	42 USC§ 7409, 40 CFR 50	Protection of the nation's air quality. Establishes air quality levels that protect public health. Concern for this removal action would be control of fugitive dust.	The State of Idaho's air quality rules govern air quality at this site. Therefore, the CAA requirements are relevant and appropriate.	Relevant and Appropriate	Sec. 3.2.1; Sec. 3.2.2; Sec. 6.5.1
Location-Specific	Archaeological and Historic Preservation Act	40 C.F.R. § 6.301	Data recovery and preservation activities.	An archeological survey has been conducted. If archeologically important items are discovered during implementation, the substantive requirements will be followed.	Applicable	Sec. 2.1; Sec. 2.3; Sec. 3.2.4; Appendix B
	National Historic Preservation Act	16 U.S.C. §§ 470f, 36 C.F.R. Parts 60, 63 and 800, 40 C.F.R. § 6.301	Section 106 of NHPA process balances needs of Federal undertaking with effects the undertaking may have on historic properties	A Cultural Resource Survey has been completed. If culturally important items or structures are discovered during implementation, the substantive requirements will be followed.	Applicable	Sec. 2.1; Sec. 2.3; Sec. 3.2.4; Appendix B
	Protection of Wetlands	40 C.F.R. § 6.302	Wetlands Protection: Executive Order 11990 requires agencies conducting certain activities to avoid, to the extent possible, the adverse impacts associated with the destruction or loss of wetlands and to avoid support of new construction in wetlands if a practicable alternative exists.	Applicable if jurisdictional wetlands are impacted by the project. A wetlands delineation has been conducted as part of the design and one jurisdictional wetland has been identified.	Applicable	Sec. 2.1; Sec. 2.3; Sec. 3.2.2; Appendix A
	Federal Land Policy and Management Act of 1976 (FLPMA)	43 USC 1701	Provides for multiple use and inventory, protection, and planning for resources on public lands.	The substantive requirements of the BLM's Land Use Plan and Resource Management Plan will be considered during the design and implementation of the removal action.	Relevant and Appropriate	PRSC Plan; Sec. 6.14
	Conda Stormwater Pollution Prevention Plan	Simplot 2009	Conda's Pollution Prevention Team investigates the potential for contamination of storm water runoff at the facility from non-storm water discharges.		TBC	Sec. 8; Appendix E; Appendix H
	Considering Wetlands at CERCLA Sites Guidance	OSWER 9280.03	Guidance to evaluate potential impacts on wetlands		TBC	Sec. 2.1; Sec. 2.3; Sec. 3.2.2; Appendix A

Table 4-3
Summary of Applicable and/or Relevant and Appropriate Requirements

	Standard, Limitation, or Requirement Criteria	Citation	Description	Comments	Category	Document Location Where ARAR is Addressed
State of Idaho						
Chemical-Specific	Idaho Water Quality Standards	IDAPA 58.01.02	Narrative and numerical standards that apply to all surface waters in Idaho	The removal action objective (RAO) is to reduce contaminant concentrations in surface waters downgradient from the site, not to meet the Idaho Water Quality Standards (IWQS). Post removal action surface water monitoring will be compared against the IWQS. Where the IWQS are more stringent than the National AWQS, the IWQS will be applicable. The IWQS for cadmium for the acute criterion is more stringent than the AWQS based on a hardness of 100 mg/l. For all other COPCs the IWQS and the AWQS are the same.	Applicable	Sec. 3.1; Sec. 8.3; Appendix J; Meeting this ARAR is goal of NTCRA
	Idaho Ground Water Quality Rule	IDAPA 58.01.11.200	Numerical and narrative standards that apply to all groundwater in Idaho	The removal action objective (RAO) is to reduce contaminant concentrations in the groundwater downgradient from the site, not to meet the Idaho Groundwater Quality Standards (IGWQS). Post removal action groundwater monitoring will be compared against the MCLs and IGWQS.	Applicable	Sec. 3.1; Sec. 8.3; Appendix J
	Idaho Water Quality Act	Idaho Code, Title 39, Chapter 36	Procedures to preserve water quality and state authority for setting water quality standards	The substantive requirements of this statute will be met to maintain and achieve existing and beneficial uses of surface water.	Applicable	Sec. 3.1; Sec. 8.3; Appendix J
	Rules and Standards for Hazardous Waste	IDAPA 58.01.05	Standards and procedures for managing hazardous waste	The removal action is not expected to generate hazardous wastes. However, if any are generated through implementation, they will be managed in accordance with the substantive requirements of this rule.	Applicable	Sec. 3.2.3
Action-Specific	Solid Waste Management Rules	IDAPA 58.01.06	Establishes requirements applicable to all solid waste and solid waste management facilities	Any solid wastes generated through implementation of the removal action will be managed in accordance with the substantive requirements of this rule.	Applicable	Sec. 6.5.1; Appendix E; Appendix H
	Idaho Surface Mining Act	Idaho Code, Title 47, Chapter 15	Establishes procedures for reclamation and provides state authority for Idaho Surface Mining Rules.	Compliance with the substantive aspects of this statute provides for protection of public health, safety and welfare, through measures to reclaim the surface of all the lands disturbed by implementation of the removal action, thereby conserving natural resources, aiding in the protection of wildlife, domestic animals, aquatic resources, and reducing soil erosion.	Relevant and Appropriate	Sec. 3.2; Sec. 4.2
	Rules Governing Exploration, Surface Mining, and Closure of Cyanidation Facilities	IDAPA 20.03.02.140	Procedures for mining and reclamation activities including clearing and grubbing, topsoil removal, road construction and abandonment, erosion controls, settling pond construction and maintenance, re-vegetation, and storing/handling of petroleum products and chemicals.	The substantive requirements of this rule will be met through use of Best Management Practices to protect the quality and beneficial use of Waters of the State.	Relevant and Appropriate	Sec. 3.2.2; Sec. 4.2; Sec. 4.3; Sec. 4.4; Sec. 5.5; Sec. 5.8; Sec. 6; Appendix H
	Well Construction Standard Rules	IDAPA 37.03.09	Requirements for well construction and abandonment.	The substantive requirements of these rules will be complied with for construction of post removal action monitoring wells	Applicable	Sec. 6.13; Appendix L
	Air Pollution Control Rules	IDAPA 58.01.01	These rules provide for the control of air pollution in Idaho	The substantive requirements of these rules will be complied with through implementation of best management practices to control dust during construction.	Applicable	Sec. 3.2.1; Sec. 3.2.2; Sec. 6.5.1
Location-Specific	Preservation of Historical Sites	Idaho Statutes Title 67, Chapters 46 and 41	Guidance to preserve historical, archeological, architectural, and cultural heritage	An evaluation has been completed to determine if there are any historical or culturally important artifacts or structures at the site. If any culturally important artifacts or structures are encountered during implementation, the SHPO will be consulted.	Applicable	Sec. 2.1; Sec. 2.3; Sec. 3.2.4; Appendix B

Table 4-4
Summary of Sample Locations

Location	Location Type	Location Description	Rationale
GW-28/29	GW (Alluvial/Dinwoody)	Nested well completion in Pedro Crk Drainage	Effectiveness monitoring of both pile covers
GW-30	GW (Dinwoody)	Dinwoody well east of the NTCRA	Dinwoody effectiveness monitoring downgradient of NTCRA
GW-41/42	GW (Alluvial/Dinwoody)	Nested well completion NE Basin	Effectiveness monitoring downgradient of NES-5
GW-43[1]	GW (Alluvial)	Shallow well downgradient of East Basin	Shallow groundwater effectiveness monitoring downgradient of east basin
GW-44	GW (Dinwoody)	Deep well downgradient of east basin	Dinwoody effectiveness monitoring of east basin
GW-45/46	GW (Alluvial/Dinwoody)	Nested well completion downgradient of FSPS basin	Effectiveness monitoring downgradient of FSPS
NE Sed Basin North	SW/SD	Northern most cell of the cells that make up the NE Basin	Monitor effectiveness of soil cover
NE Sed Basin Center	SW/SD	Central cell of the NE Basin	Monitor effectiveness of soil cover
NE Sed Basin South	SW/SD	Southern cell that recieves flow from the east ditch	Monitor effectiveness of soil cover
NE Seep Pond	SW	NES-5 seep collection basin	Monitor seep pond water
NES-5	SW	NES-5 discharge from the underground drain to the seep pond	Monitor effectiveness of soil cover
PC-2	SW/SD	Stream location adjacent to GW-30	Initial sample to be taken in undisturbed sediment material to establish baseline conditions
PC-4	SW/SD	Stream location below confluence of the PC drainage and PCT drainage	Initial sample to be taken in undisturbed sediment material to establish baseline conditions
PC-5	SW/SD	Stream location upgradient of PC-4 towards the northeast basin	Initial sample to be taken in undisturbed sediment material to establish baseline conditions
PC-6	SW/SD	Upgradient of PC-5 and downgradient of PC-8	Initial sample to be taken in undisturbed sediment material to establish baseline conditions
PC-8	SW/SD	Located ~500 feet downgradient of PC-9	Initial sample to be taken in undisturbed sediment material to establish baseline conditions
PC-9	SW/SD	Located immediately downgradient of the NE Basin spillway	Initial sample to be taken in undisturbed sediment material to establish baseline conditions
E Sed Basin North	SW/SD	Northern cell that recieves flow from the east ditch	Monitor effectiveness of soil cover
E Sed Basin Center	SW/SD	Central cell of the East Basin	Monitor effectiveness of soil cover
E Sed Basin South	SW/SD	Southern cell that recieves flow from the east ditch	Monitor effectiveness of soil cover
East Seep Pond	SW	NES-7 Seep collection pond	Monitor seep pond water
NES-7	SW	NES-7 discharge from the underground drain to the seep pond	Monitor effectiveness of soil cover
NES-8	SW	NES-8 seep from east toe of regraded pile	Monitor effectiveness of soil cover
PCT 6-1	SW/SD	Stream downgradient of east basin	Monitor efftect of any suspected discharge from basin and to establish baseline conditions after construction of stormwater controls

Table 4-4
Summary of Sample Locations

Location	Location Type	Location Description	Rationale
PCT 6-2	SW/SD	Stream ~100 feet downgradient of east basin	Monitor efftect of any suspected discharge from basin and to establish baseline conditions after construction of stormwater controls
SE Sedimentation/Infitration Basin	SW/SD	Sedimentation basin that recieves run-off from south area of NTCRA site	Monitor effectiveness of soil cover
PCT 6-3	SW/SD	Downgradient of sw infiltration basin spillway	Monitor efftect of any suspected discharge from basin and to establish baseline conditions after construction of stormwater controls
FSPS Sed Basin	SW/SD	Sedimentation basin that recieves run-off from FSPS site	Monitor effectiveness of soil cover
FSPS Seep Pond	SW	FSPS seep collection basin	Monitor seep pond water
FSPS Seep	SW	Discharge from seasonal seep	Monitor effectiveness of soil cover
PCP-2	SW/SD	Stock pond down gradient of FSPS basin	Monitor effectiveness of soil cover and any discharge from basin
PCT 6-4	SW/SD	Downgradient of PCT 6-5 ~280 feet	Monitor efftect of any suspected discharge from basin and to establish baseline conditions after construction of stormwater controls
PCT 6-5	SW/SD	Located immediately downgradient of the FSPS spillway	Monitor efftect of any suspected discharge from basin and to establish baseline conditions after construction of stormwater controls
SW Infitration Basin	SW/SD	Sedimentation basin that recieves run-off from Upslope area	Monitor effectiveness of soil cover
West Pit Infiltration Basin	SW	Infitration basin that recieves run-off from West Pit	Monitor effectiveness of soil cover
North Borrow Sed Basin	SW/SD	North sedimentation basin at the Dinwoody borrow area	Monitor stormwater conditions at borrow area
IB-1	SW/SD	Located immediately downgradient of the spillway	Monitor efftect of any suspected discharge from basin and to establish baseline conditions after construction of stormwater controls
South Borrow Sed Basin	SW/SD	South sedimentation basin at the Dinwooody borrow area	Monitor stormwater conditions at borrow area
HHT 1-1	SW/SD	Located upgradient of HHT 1-2 in an unnamed drainage	Initial sample to be taken in undisturbed sediment material to establish baseline conditions, upgradient from south borrow spillway in drainage
HHT 1-2	SW/SD	Located immediately downgradient of the spillway	Monitor efftect of any suspected discharge from basin and to establish baseline conditions after construction of stormwater controls
HHP-1	SW	Pond located downgradient of South borrow area basin	Monitor efftect of any suspected discharge from borrow basin

Notes:
GW - Groundwater
SW - Surface water
SD - Sediment

[1] Monitoring well GW-43 was installed in 2014.

Table 4-5
Summary of Analytical Parameters

Analytical Parameters			
Groundwater	**Surface Water**	**Sediment and Soil**	**Vegetation/ Biota**
Field Measurements			
Depth to Groundwater	Discharge		
Temperature	Temperature		
pH	pH		
Specific conductance	Specific conductance		
Dissolved oxygen	Dissolved oxygen		
Turbidity	Turbidity		
ORP	ORP		
Metals (Total and Dissolved for Aqueous and Total for Solids)			
Arsenic	Arsenic	Arsenic	Arsenic
Cadmium	Cadmium	Cadmium	Cadmium
Chromium	Chromium	Chromium	Chromium
Selenium, total recoverable	Selenium, total recoverable	Selenium	Selenium
Vanadium	Vanadium	Vanadium	Vanadium
Zinc	Zinc	Zinc	Zinc
General Cations and Anions (Total and Dissolved)			
Calcium	Calcium		
Magnesium	Magnesium		
Potassium	Potassium		
Sodium	Sodium		
Chloride	Chloride		
Fluoride	Fluoride		
Nitrate/Nitrite, as N	Nitrate/Nitrite, as N		
Phosphorus	Phosphorus		
Sulfate	Sulfate		
Other Analytes			
Alkalinity	Alkalinity		
Ammonia, as N	Ammonia, as N		
Dissolved oxygen	Dissolved oxygen		
Hardness	Hardness		
pH	pH		
Total Organic Carbon (TOC)	Total Organic Carbon (TOC)		
Total Dissolved Solids (TDS)	Total Dissolved Solids (TDS)		
Total Suspended Solids (TSS)	Total Suspended Solids (TSS)		
Oxygen Isotopes			
Gross Alpha			
Gross Beta			

Notes:
ORP - Oxygen Reduction Potential

Table 4-6
Sample Preservation Methods and Holding Times

Analyte	Sample Container	Preservation and Storage	Holding Time (days)
Metals (excluding mercury), Hardness, Cations	Polyethylene	HNO_3 to pH < 2	180
Mercury	Polyethylene	HNO_3 to pH < 2	28
Alkalinity	Polyethylene	Cool at 4ºC	14
Total Phosphorous, Nitrate/Nitrite, Ammonia, TOC	Polyethylene	H_2SO_4 to pH < 2, Cool at 4ºC	28
Sulfate	Polyethylene	Cool at 4ºC	28
Chloride, Fluoride	Polyethylene	none required	28
TDS, TSS	Polyethylene	Cool at 4ºC	7

Table 4-7
Range of COPC Concentrations in Native Dinwoody Formation

Analyte	Minimum	Maximum
	(mg/kg)	
Aluminum	9,300	24,400
Antimony	0.041	0.36
Arsenic	2.9	20.4
Barium	64.2	376
Beryllium	0.3	1.1
Boron	5	20
Cadmium	0.68	14.7
Chromium	20.2	78.4
Cobalt	2.7	15.6
Copper	8.3	34.3
Iron	8,220	29,600
Lead	4.2	22.7
Manganese	285	9,930
Mercury	0.013	0.12
Molybdenum	0.66	7.1
Nickel	13.5	81
Selenium	0.1	4.5
Silver	0.12	0.55
Thallium	0.14	0.51
Uranium	0.77	8.5
Vanadium	25.7	121
Zinc	42.6	208

Notes:

Concentration ranges are based on 32 samples collected from the Dinwoody Formation covers on the FSPS
and 11 samples from the borrow areas included in Appendix F

Table 4-8
Summary of Analysis Methods[1]

Media	Laboratory Analysis	Method	Reporting Limit (mg/L)
Groundwater and Surface Water	**Metals (dissolved)**		
	Arsenic	6010C	0.005
	Cadmium	6020	0.0002
	Chromium	6010C	0.006
	Selenium	6020A	0.001
	Vanadium	6010C	0.005
	Zinc	6010C	0.01
	Metals (total)		
	Arsenic	6010C	0.005
	Cadmium	6020A	0.0002
	Chromium	6010C	0.006
	Selenium	6020A	0.001
	Vanadium	6010C	0.005
	Zinc	6010C	0.01
Soil and Sediment	**Metals, Total**		
	Arsenic	6010C	5
	Cadmium	6020A	0.1
	Chromium	6010C	1
	Selenium	6020A	0.2
	Vanadium	6010C	0.5
	Zinc	6010C	1
	Percent Solids	NA	NA

Notes:
1 - Soil samples will be analyzed for the full suite of RI COPCs for the first year of PRSC monitoring.

FIGURES

Blackfoot River
Woodall Spring
Woodall Mountain
34
East Woodall Panel
Woodall Panel
South Woodall Panel
Ibex Panel
Conda
Middle Limb Panel
Sheep Canyon
West Limb Panel
Grace Panel
North Trail Panel
Trail Creek
Formation Spring
Trail Canyon
Wood Canyon
Ledger Creek
Soda Springs

Interstate Highway
Other Highway
County Boundary
Idaho
Map Location

Legend

- Primary Road
- Secondary Road
- Intermittent Stream
- Perennial Stream
- Pond or Lake
- Marsh or Wetland
- Mine Panels
- Blackfoot / Bear River Drainage Divide
- Mine Boundary
- FSPS Area Boundary
- NTCRA Area Boundary
- Dinwoody Borrow Areas

N

Feet
0 4,000 8,000

J.R. SIMPLOT COMPANY
CONDA/WOODALL MOUNTAIN MINE
PEDRO CREEK SUBBASIN PRSC

FIGURE 1-1

CONDA / WOODALL MOUNTAIN PHOSPHATE MINE LOCATION

DATE: JUL 21, 2015
BY: CRL
FOR: RPS

FORMATION ENVIRONMENTAL

S:\GIS\arcprj2\010139\plt\PedroCreekEarlyAction\PRSCplan\Final\Fig1-1_Vicinity.mxd

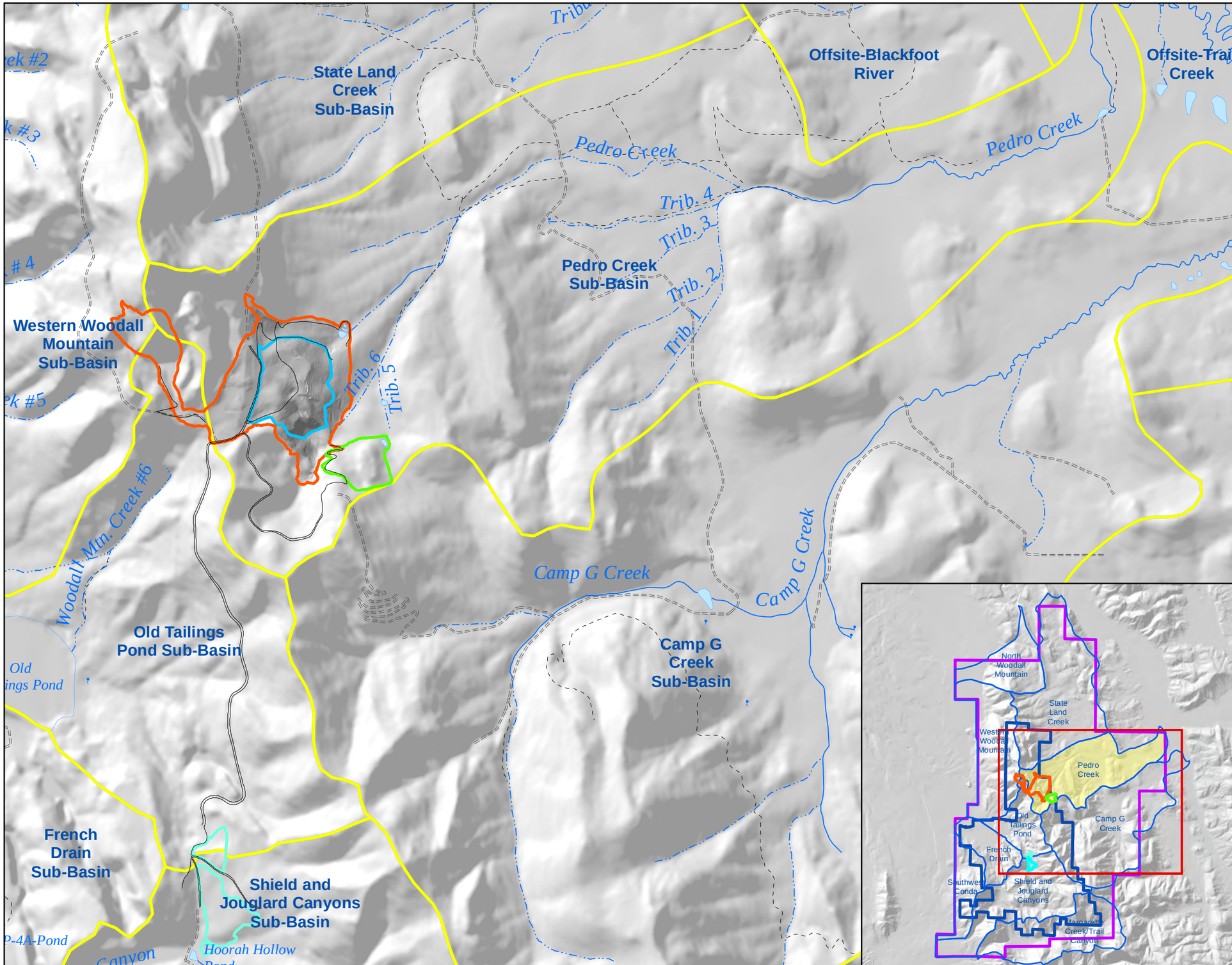

Legend

- Drainage Sub-Basin Boundary
- FSPS Area Boundary
- NTCRA Area Boundary
- Dinwoody Borrow Boundary
- Angle of Repose Pile Boundary
- Primary Roads
- Secondary Roads
- Unimproved Road
- 4WD Trail

0 1,000 2,000
Feet

N

J.R. SIMPLOT COMPANY
CONDA/WOODALL MOUNTAIN MINE
PEDRO CREEK SUBBASIN PRSC

FIGURE 1-2

NTCRA AND FSPS FEATURES IN PEDRO CREEK SUB-BASIN

DATE: JUL 21, 2015
BY: BAP
FOR: RPS

FORMATION ENVIRONMENTAL

S:\GIS\arcprj2\01\01.39\plt\PedroCreekEarlyAction\PRSCpbn\Final\Fig1-2_NTCRASiteOutline.mxd

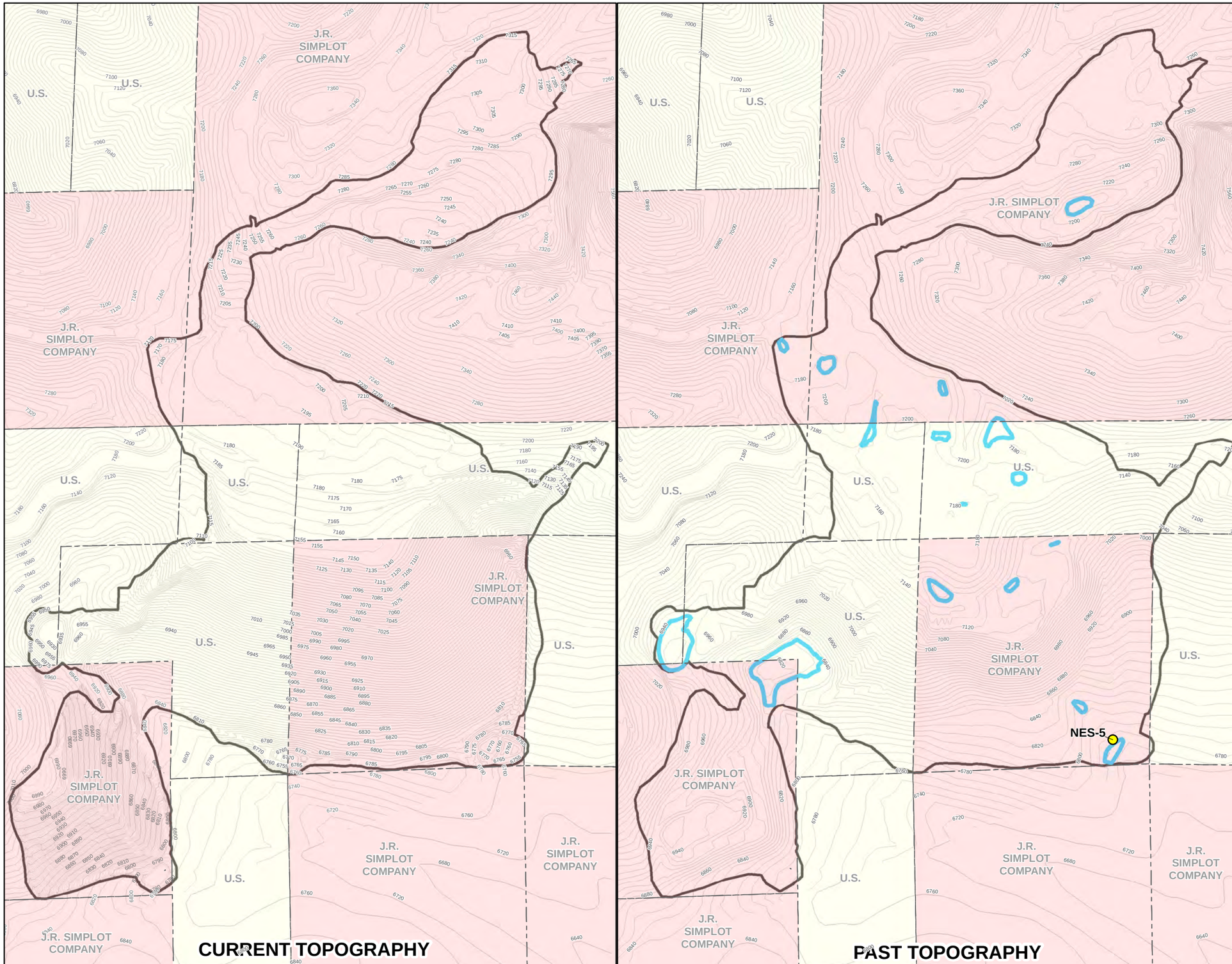

Legend

2014 As-Built Final Survey

- Index Contour (5 ft)
- Property Lines
- Extent of NTCRA and FSPS Actions

Existing 2010 Contours

- Index Contour (10 ft)
- Index Contour (40 ft)
- Runoff Pooling Areas
- Former NES-5 Seep Location

Land Ownership

Land Surface Ownership

- U.S. BLM Ownership
- J.R. Simplot Ownership

Notes:

-USGS 40 ft contours are shown where 2010 10 ft contours end.
-Past Topography imagery is from Simplot 2010.
-Past and present hillshades shown for contrast.

0 250 500
Feet

N

J.R. SIMPLOT COMPANY
CONDA/WOODALL MOUNTAIN MINE
PEDRO CREEK SUBBASIN PRSC

FIGURE 1-3

CURRENT AND PAST TOPOGRAPHY AT NTCRA AND FSPS OVERBURDEN PILES

DATE: JUL 21, 2015
BY: KAM FOR: RPS

FORMATION ENVIRONMENTAL

S:\GIS\ARCPRJ2\0101139\PLT\PEDROCREEKEARLYACTION\PRSCPLAN\FINAL\FIG1-3_TOPONTCRA_FSPS.MXD

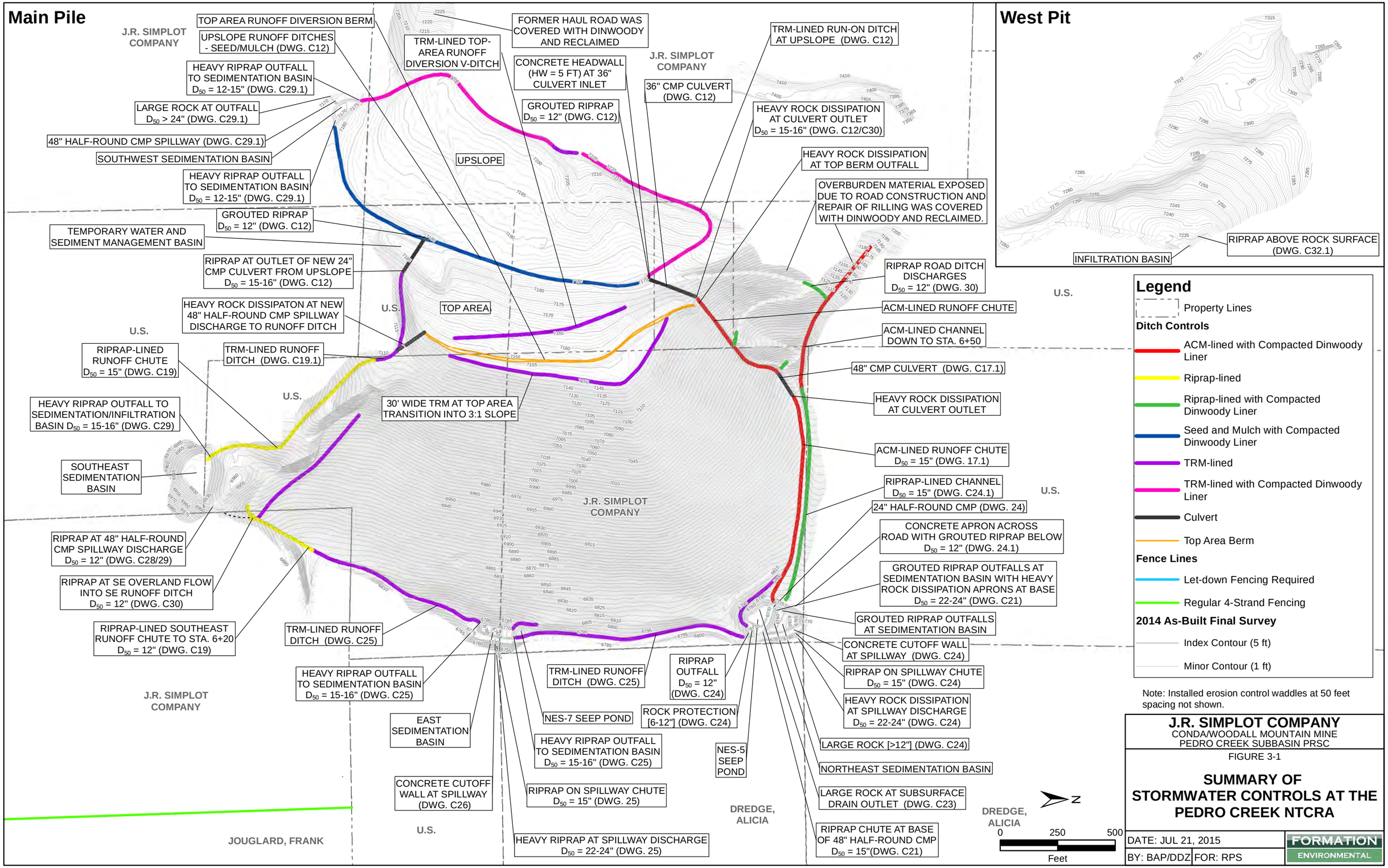

J.R. SIMPLOT COMPANY
CONDA/WOODALL MOUNTAIN MINE
PEDRO CREEK SUBBASIN PRSC

FIGURE 3-1

SUMMARY OF STORMWATER CONTROLS AT THE PEDRO CREEK NTCRA

DATE: JUL 21, 2015 | FORMATION ENVIRONMENTAL
BY: BAP/DDZ | FOR: RPS

S:\GIS\arcprj2\010139\plt\PedroCreekEarlyAction\PRSCplan\Final\Fig3-1_NTCRA_StormwaterControls.mxd

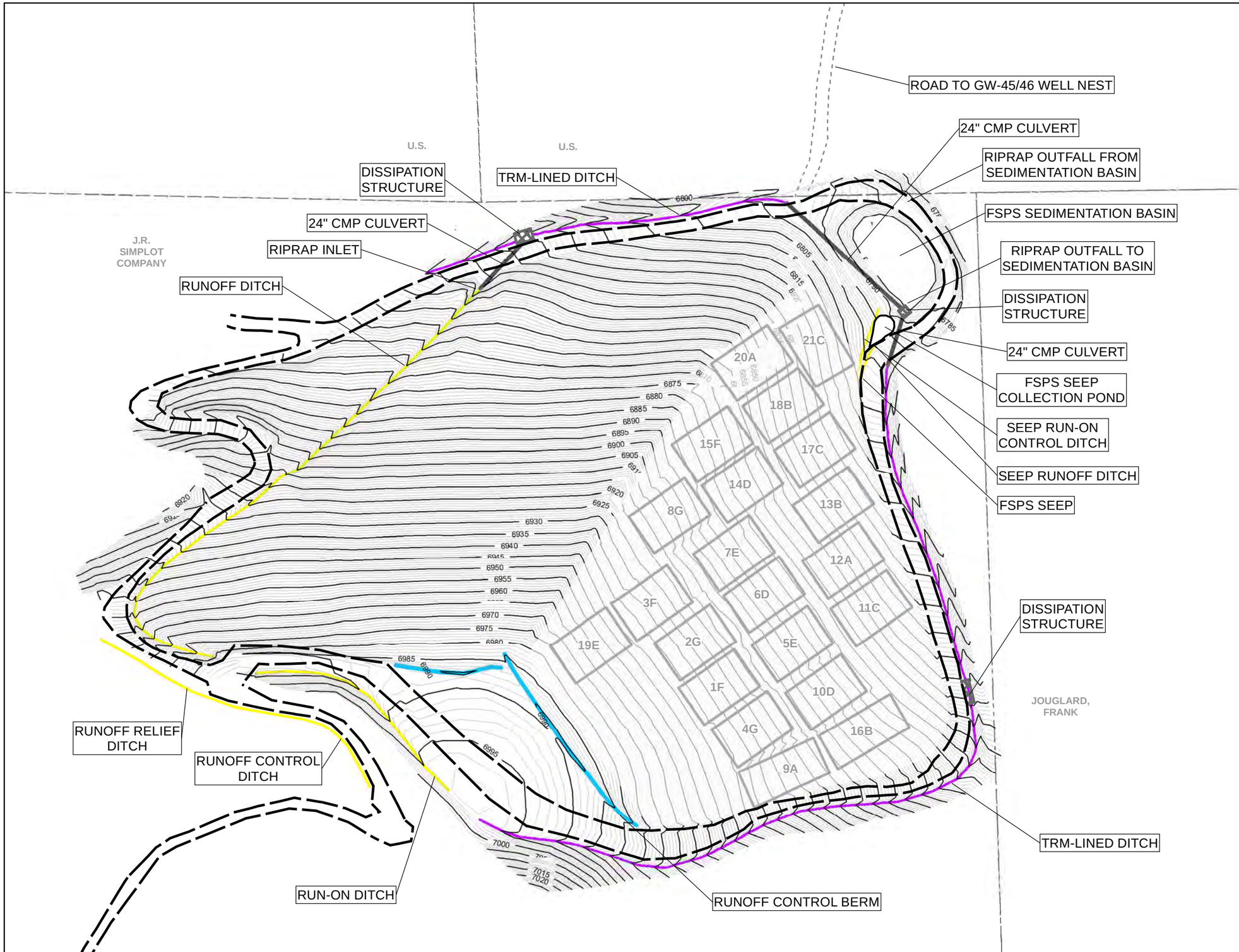

Legend

Ditch Controls

- Berm
- Culvert
- TRM-lined Ditch
- Runoff/Run-on Ditch
- Dissipation Structure
- Test Plot
- Property Lines
- Perimeter Road
- Edge of Dirt Road to GW-45/46 well nest

As-built Contours (6-24-2013)

- Major Contour (5-ft)
- Minor Contour (1-ft)

Note: Easterly slope is part of the FSPS study area and not part of the PRSC.

Note: Installed erosion control waddles at 50 feet spacings not shown.

0 125 250 Feet

N

J.R. SIMPLOT COMPANY
CONDA/WOODALL MOUNTAIN MINE
PEDRO CREEK SUBBASIN PRSC

FIGURE 3-2

SUMMARY OF STORMWATER CONTROLS AT THE FSPS

DATE: JUL 21, 2015
BY: BAP FOR: RPS

FORMATION ENVIRONMENTAL

S:\GIS\arcprj2\010139\plt\PedroCreekEarlyAction\PRSCplan\Final\Fig3-2_FSPS_StormwaterControls.mxd

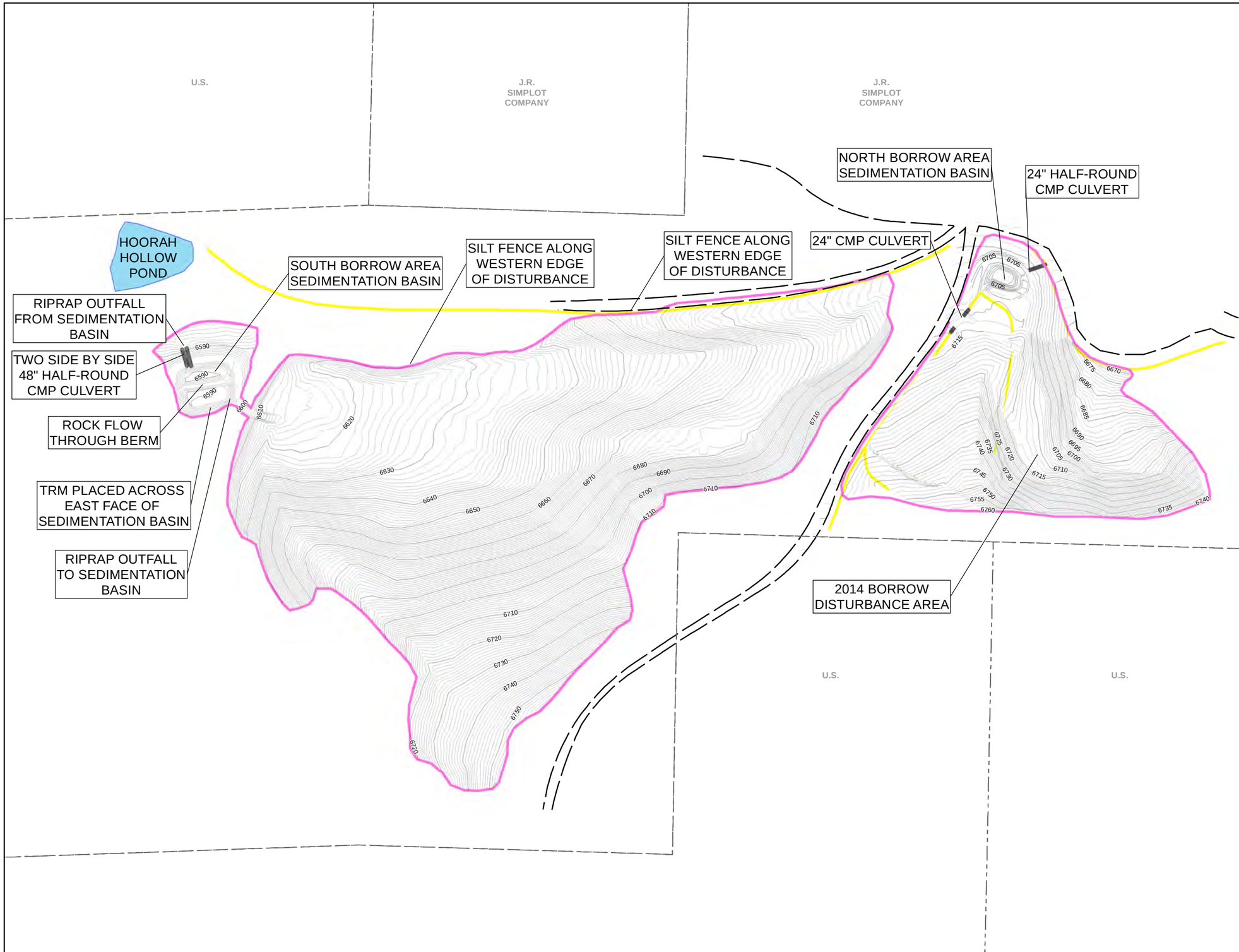

Legend

Ditch Control

- Culvert
- Runoff/Run-on Ditch
- Road Outline
- Disturbance Perimeter
- Pond
- Property Lines

2014 As-Built Final Survey

- Index Contour (10 ft)
- Minor Contour (1 ft)

N

0 200 400
Feet

J.R. SIMPLOT COMPANY
CONDA/WOODALL MOUNTAIN MINE
PEDRO CREEK SUBBASIN PRSC

FIGURE 3-3

SUMMARY OF STORMWATER CONTROLS AT THE DINWOODY BORROW AREA

DATE: JUL 21, 2015
BY: BAP/DDZ FOR: RPS

FORMATION ENVIRONMENTAL

S:\GIS\arcprj2\010139\plt\PedroCreekEarlyAction\PRSCplan\Final\Fig3-3_BorrowArea_StormwaterControls.mxd

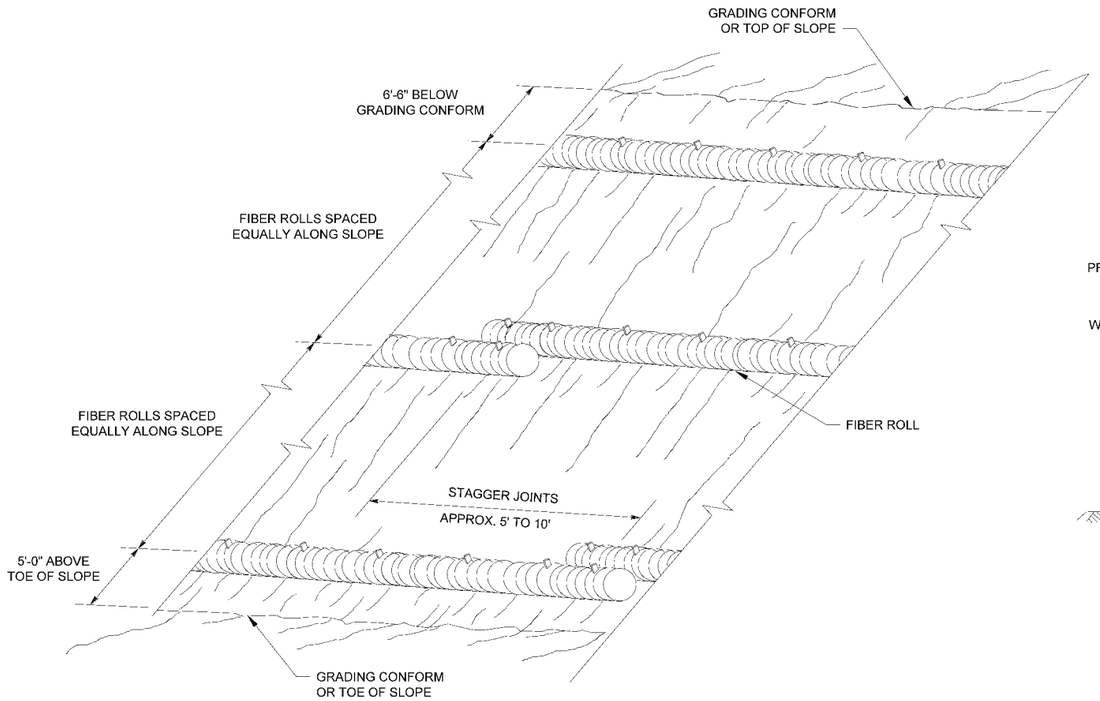

PERSPECTIVE
FIBER ROLL (TYPE 1)
NOT TO SCALE

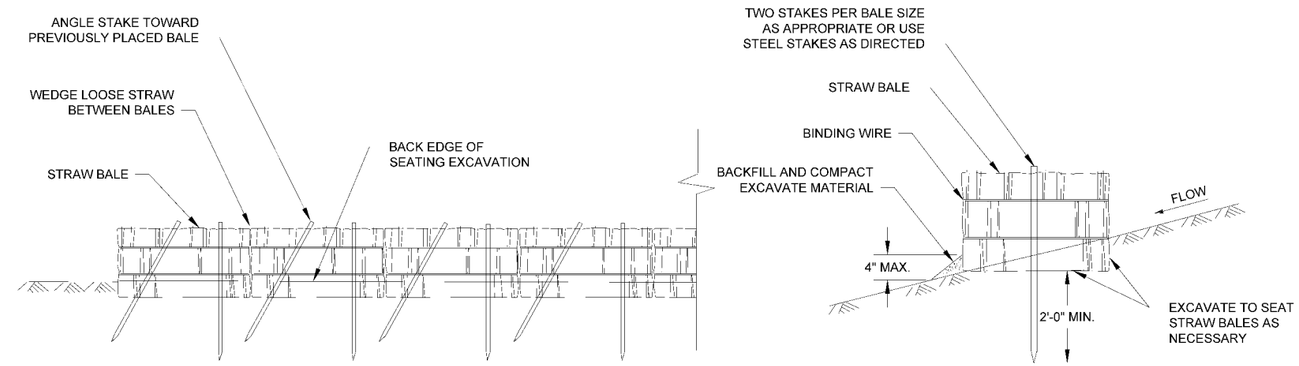

FRONT ELEVATION

SECTION

TYPICAL STRAW BALE BARRIER
NOT TO SCALE

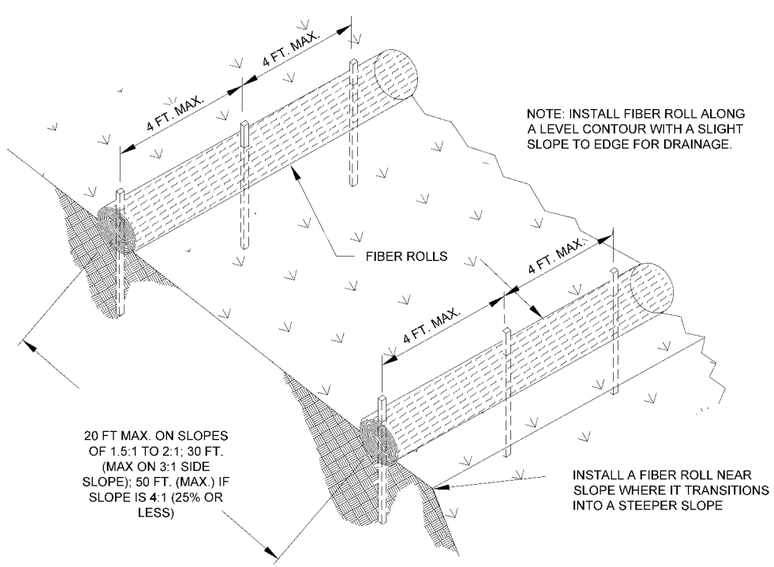

TYPICAL FIBER ROLL INSTALLATION
NOT TO SCALE

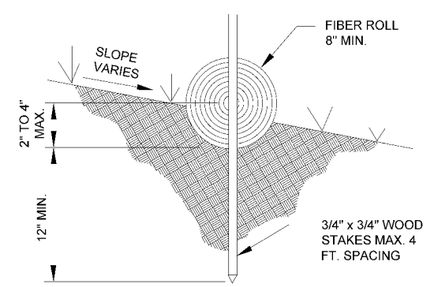

ENTRENCHMENT DETAIL
NOT TO SCALE

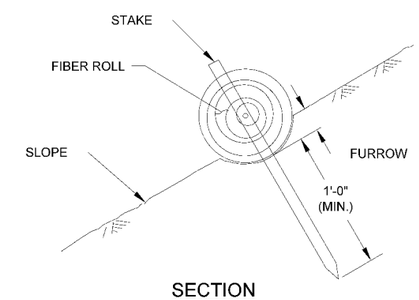

SECTION
FIBER ROLL
(TYPE 1)
NOT TO SCALE

Notes:
1. Placement of fiber rolls (straw wattles) and straw bales to be field directed.
2. Straw bales may be used in place of perimeter silt fence.

J.R. SIMPLOT COMPANY
CONDA/WOODALL MOUNTAIN MINE
PEDRO CREEK SUBBASIN PRSC

FIGURE 3-4

STRAW WATTLES INSTALLATION DETAILS

DATE: JUL 21, 2015
BY: BAP | FOR: RPS

FORMATION ENVIRONMENTAL

S:\GIS\arcprj2\010139\plt\PedroCreekEarlyAction\PRSCplan\Final\Fig3_4_StrawWattles.mxd

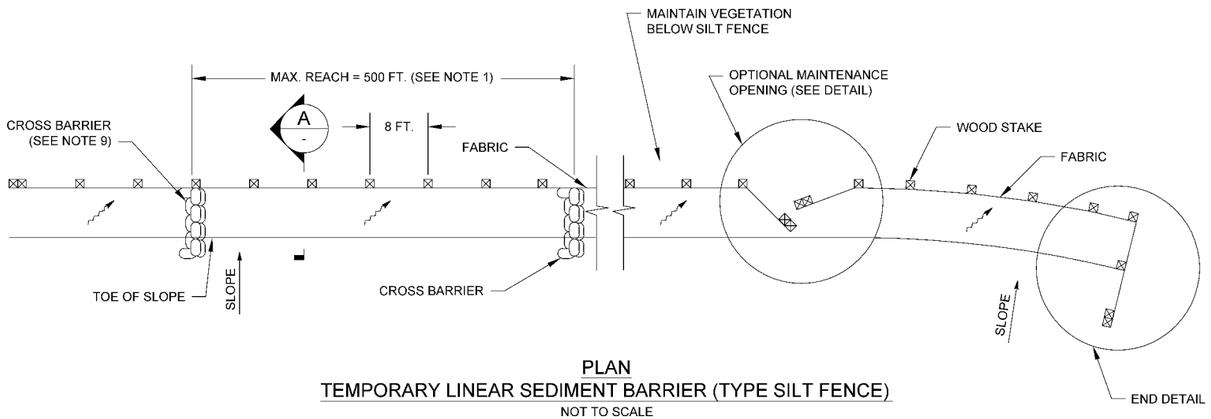

PLAN
TEMPORARY LINEAR SEDIMENT BARRIER (TYPE SILT FENCE)
NOT TO SCALE

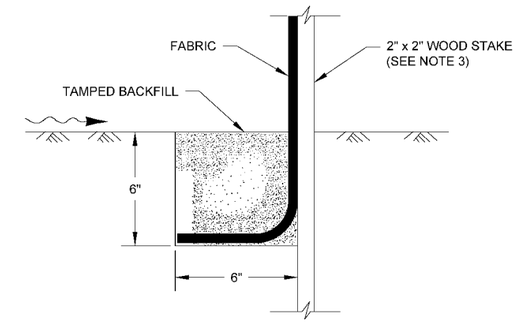

TRENCH DETAIL
NOT TO SCALE

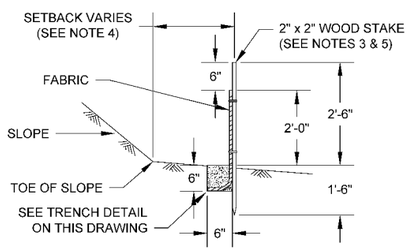

SECTION A
NOT TO SCALE

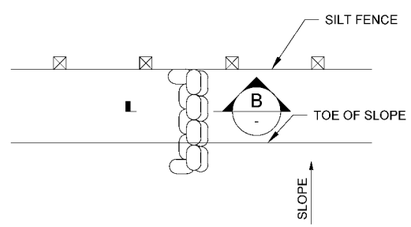

CROSS BARRIER DETAIL
NOT TO SCALE

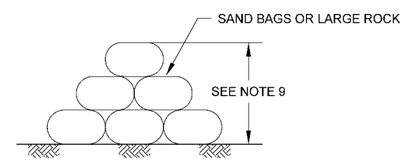

SECTION B
NOT TO SCALE

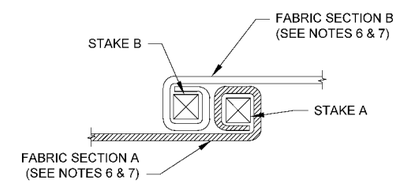

PLAN
POST AT JOINTS
NOT TO SCALE

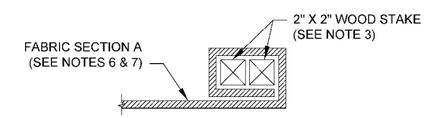

JOINING SECTION DETAIL (TOP VIEW)
NOT TO SCALE

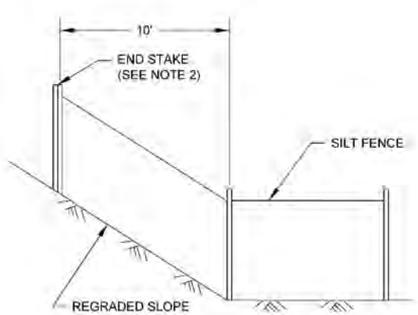

END DETAIL
NOT TO SCALE

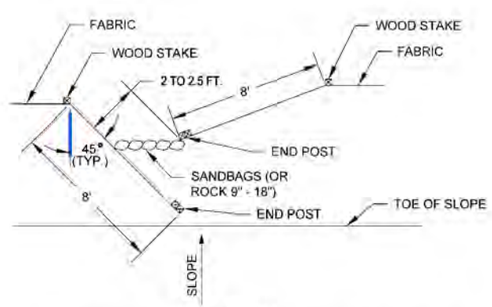

PLAN
OPTIONAL MAINTENANCE OPENING DETAIL
(SEE NOTE 11)
NOT TO SCALE

Notes:
1. Construct the length of each reach so that the change in base elevation along the reach does not exceed 1/3 the height of the linear barrier, in no case shall the reach length exceed 500 ft.
2. The last 10 ft. of fence shall be turned up slope.
3. Stake dimensions are nominal and dimensions shown are typical.
4. Dimension may vary to fit field condition.
5. Stakes shall be spaced at 10 ft. maximum and shall be positioned on downstream side of fence.
6. Stakes to overlap and fence fabric to fold around each stake one full turn. Secure fabric to stake with at least 4 staples.
7. Stakes shall be driven tightly together to prevent potential flow-through of sediment at joint. The tops of the stakes shall be secured with wire.
8. For end stake, fence fabric shall be folded around two stakes one full turn and secured with 4 staples.
9. Cross barriers shall be a minimum of 1/3 and a maximum of 1/2 the height of the linear barrier.
10. Maintenance openings shall be constructed in a manner to ensure sediment remains behind silt fence.
11. Sandbags or rock rows and layers shall be offset to eliminate gaps.

J.R. SIMPLOT COMPANY
CONDA/WOODALL MOUNTAIN MINE
PEDRO CREEK SUBBASIN PRSC

FIGURE 3-5

SILT FENCE INSTALLATION DETAILS

DATE: JUL 21, 2015		FORMATION ENVIRONMENTAL
BY: BAP	FOR: RPS	

S:\GIS\arcprj2\0101139\plt\PedroCreekEarlyAction\PRSCplan\Final\Fig3_5_SiltFence.mxd

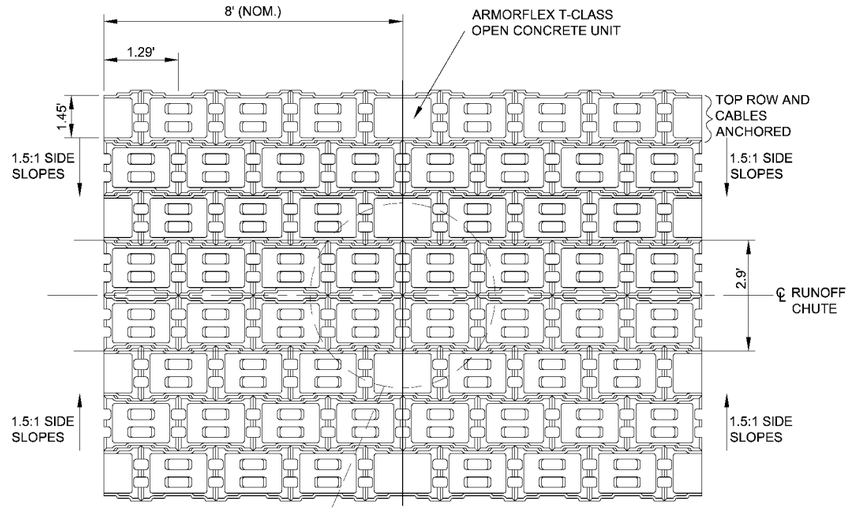

PLAN VIEW

NOT TO SCALE

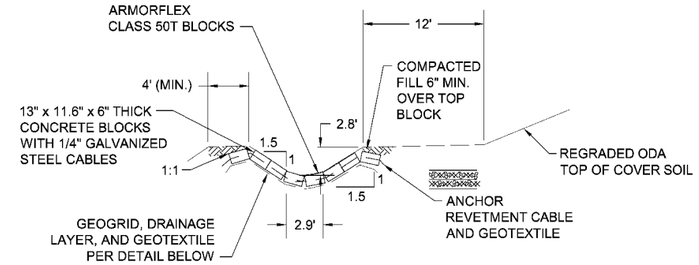

TYPICAL SECTION - ARMORFLEX LINING

NOT TO SCALE

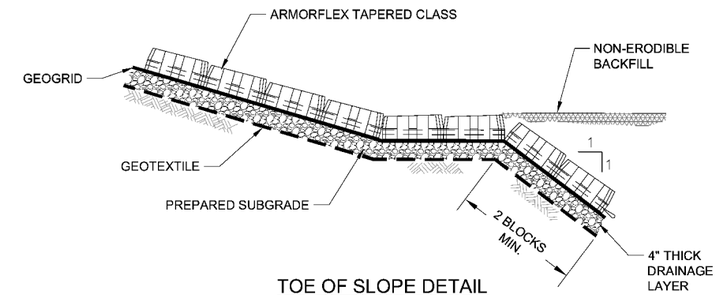

TOE OF SLOPE DETAIL

NOT TO SCALE

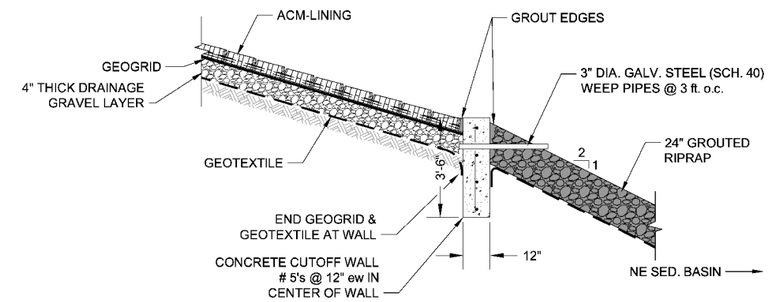

DETAIL A C21

NOT TO SCALE

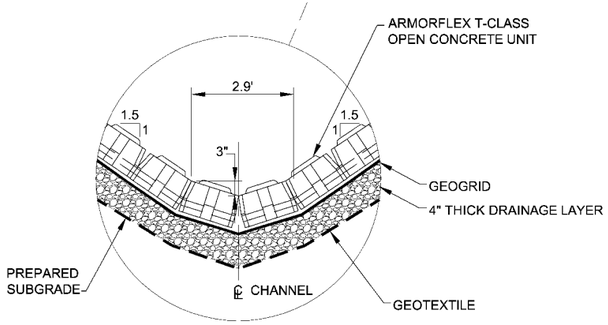

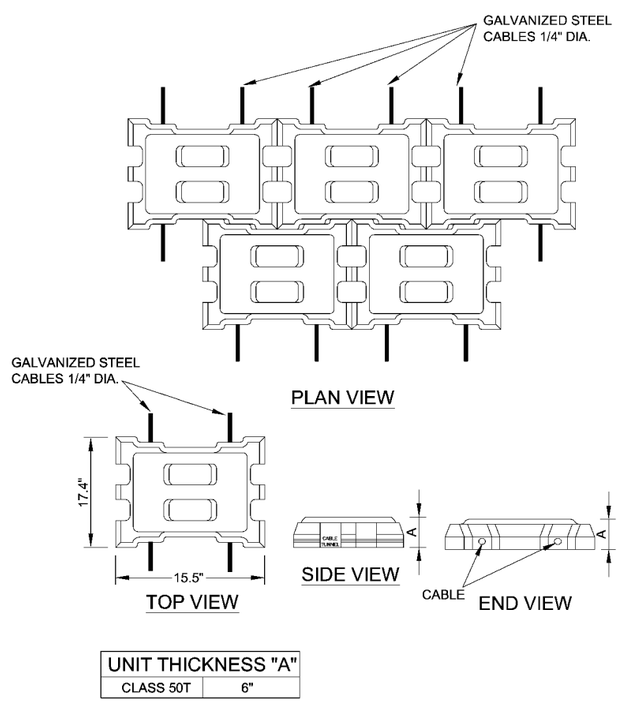

UNIT THICKNESS "A"	
CLASS 50T	6"

Notes:

1. Prepare subgrade for Armorflex in accordance with specifications and place woven or non-woven geotextile with adequate anchors and seams; provide survey checks of channel cross-sections prior to installation of Armorflex.
2. Install Armorflex panels and anchors in accordance with standard Armortec specifications for channels with an allowable variable projection of 0.5 inch.
3. An Armortec representative shall be present during initial installation of Armorflex panels (first two days minimum) and channel subgrade and installation shall be approved by the Armortec representative.
4. Use 1/4-inch diameter galvanized steel cable.
5. Installation of Armorflex panels shall be in conformance with site-specific Armortec drawings.
6. The geotextile shall meet the minimum physical requirements listed in Table No. 3 of Specifications 03350.

J.R. SIMPLOT COMPANY
CONDA/WOODALL MOUNTAIN MINE
PEDRO CREEK SUBBASIN PRSC

FIGURE 3-6

ARTICULATED CONCRETE MAT INSTALLATION DETAILS

DATE: JUL 21, 2015		FORMATION ENVIRONMENTAL
BY: BAP	FOR: RPS	

S:\GIS\arcprj2\010139\plt\PedroCreekEarlyAction\PRSCplan\Final\Fig3_6_ACM.mxd

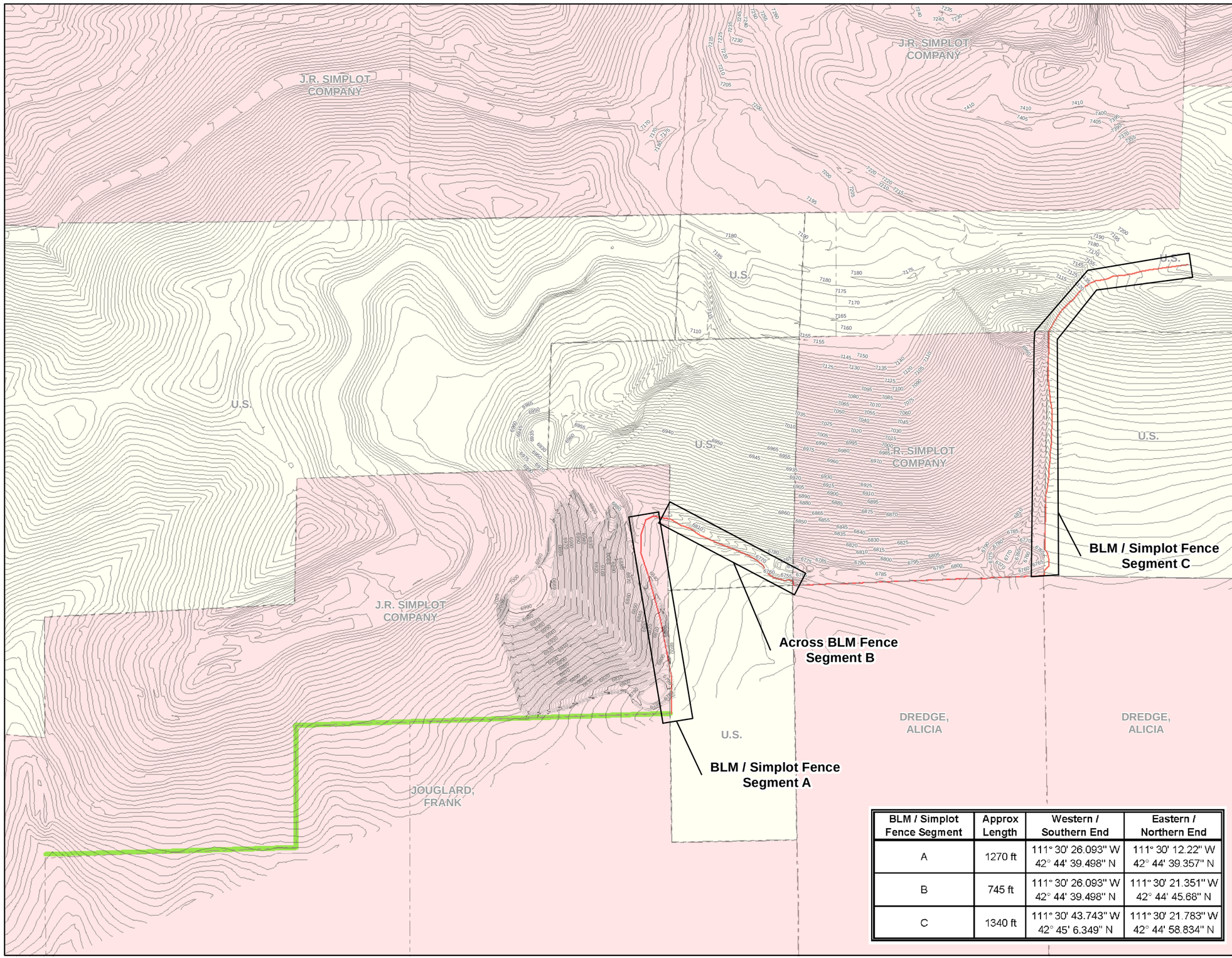

BLM / Simplot Fence Segment	Approx Length	Western / Southern End	Eastern / Northern End
A	1270 ft	111° 30' 26.093" W 42° 44' 39.498" N	111° 30' 12.22" W 42° 44' 39.357" N
B	745 ft	111° 30' 26.093" W 42° 44' 39.498" N	111° 30' 21.351" W 42° 44' 45.68" N
C	1340 ft	111° 30' 43.743" W 42° 45' 6.349" N	111° 30' 21.783" W 42° 44' 58.834" N

Legend

Index Contour (10 ft)

Index Contour (5 ft)

As-built Contours (6-24-2013)

Major Contour (5-ft)

Minor Contour (1-ft)

Land Ownership

U.S. BLM Ownership

J.R. Simplot Ownership

Fence Lines

Regular 4-Strand Fencing

Electric Fencing

0 500 1,000 Feet N

J.R. SIMPLOT COMPANY
CONDA/WOODALL MOUNTAIN MINE
PEDRO CREEK SUBBASIN PRSC

FIGURE 3-7

FENCE LINE DETAILS

DATE: AUGUST 2014
BY: BAP, AJ FOR: RPS

FORMATION ENVIRONMENTAL

S:\GIS\arcprj2\010139plt\PedroCreekEarlyAction\PRSCplan\DraftFinal\Fig3-7_Fencing.mxd

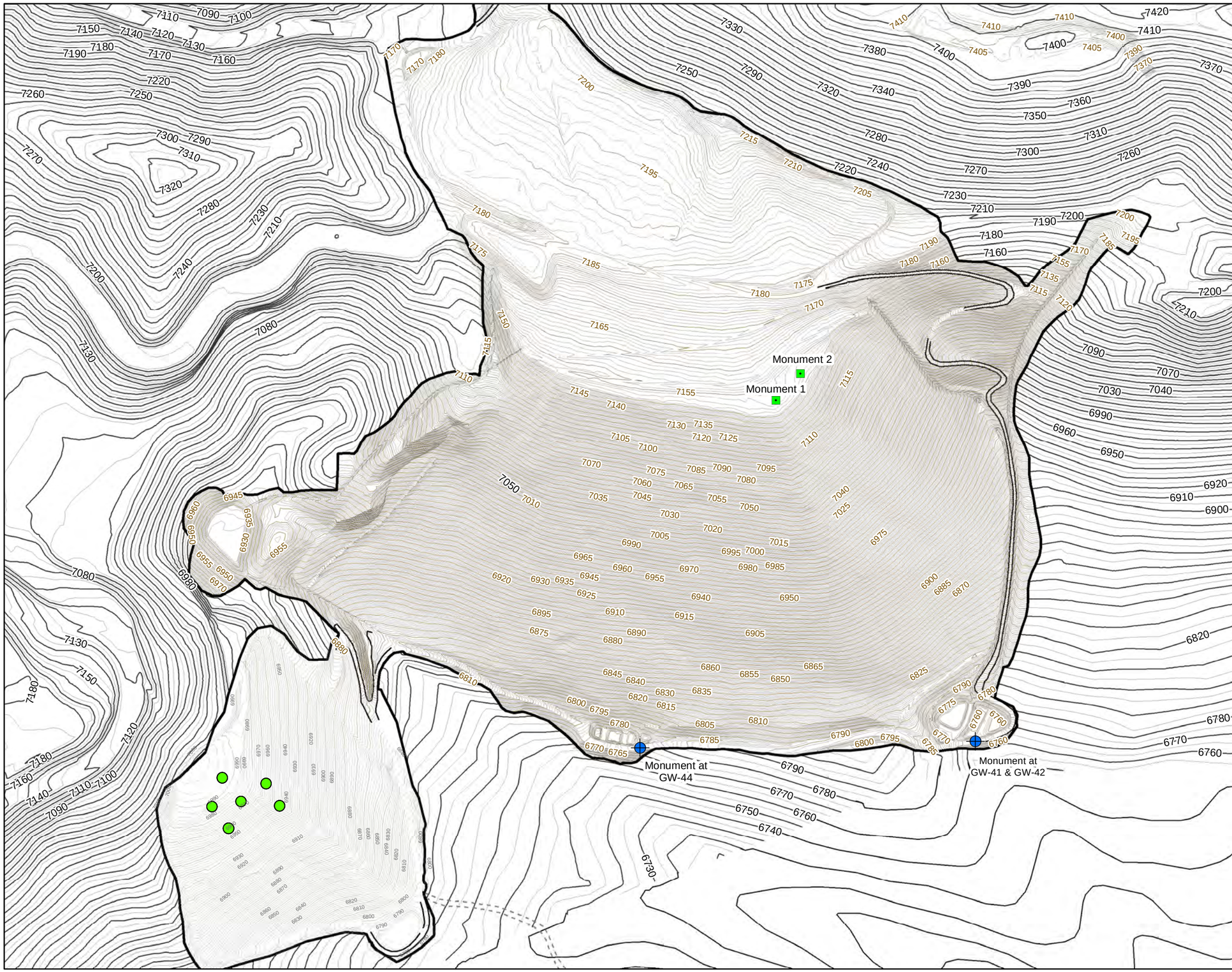

Legend

- Fill Settlement Survey Locations
- New Montoring Wells[1]
- Settlement Monuments
- Extent of NTCRA and FSPS Disturbance

2014 As-Built Final Combined Survey

- Edge of Gravel
- Edge of Dirt Road
- Index Contour (5 ft)
- Non-index Contour (1 ft)

As-built Contours (6-24-2013)

Layer

- Major Contour (5-ft)
- Minor Contour (1-ft)

Existing 2010 Contours

- Index Contour (10 ft)
- Non-index Contour (5 ft)

Note:
1. The monitoring well vaults for GW-41/GW-42 and GW-44 will be used as a survey monument because it has been installed in the deepest portion of fill used to construct the embankment.

0 250 500
Feet

N

J.R. SIMPLOT COMPANY
CONDA/WOODALL MOUNTAIN MINE
PEDRO CREEK SUBBASIN PRSC

FIGURE 3-8

LOCATIONS FOR SETTLEMENT SURVEY

DATE: JUL 21, 2015
BY: DDZ FOR: JPL

FORMATION ENVIRONMENTAL

S:\GIS\ARCPRJ2\010139\PLT\PEDROCREEKEARLYACTION\PRSCPLAN\FINAL\FIG3-8_WELLSPLATESMONUMENTS.MXD

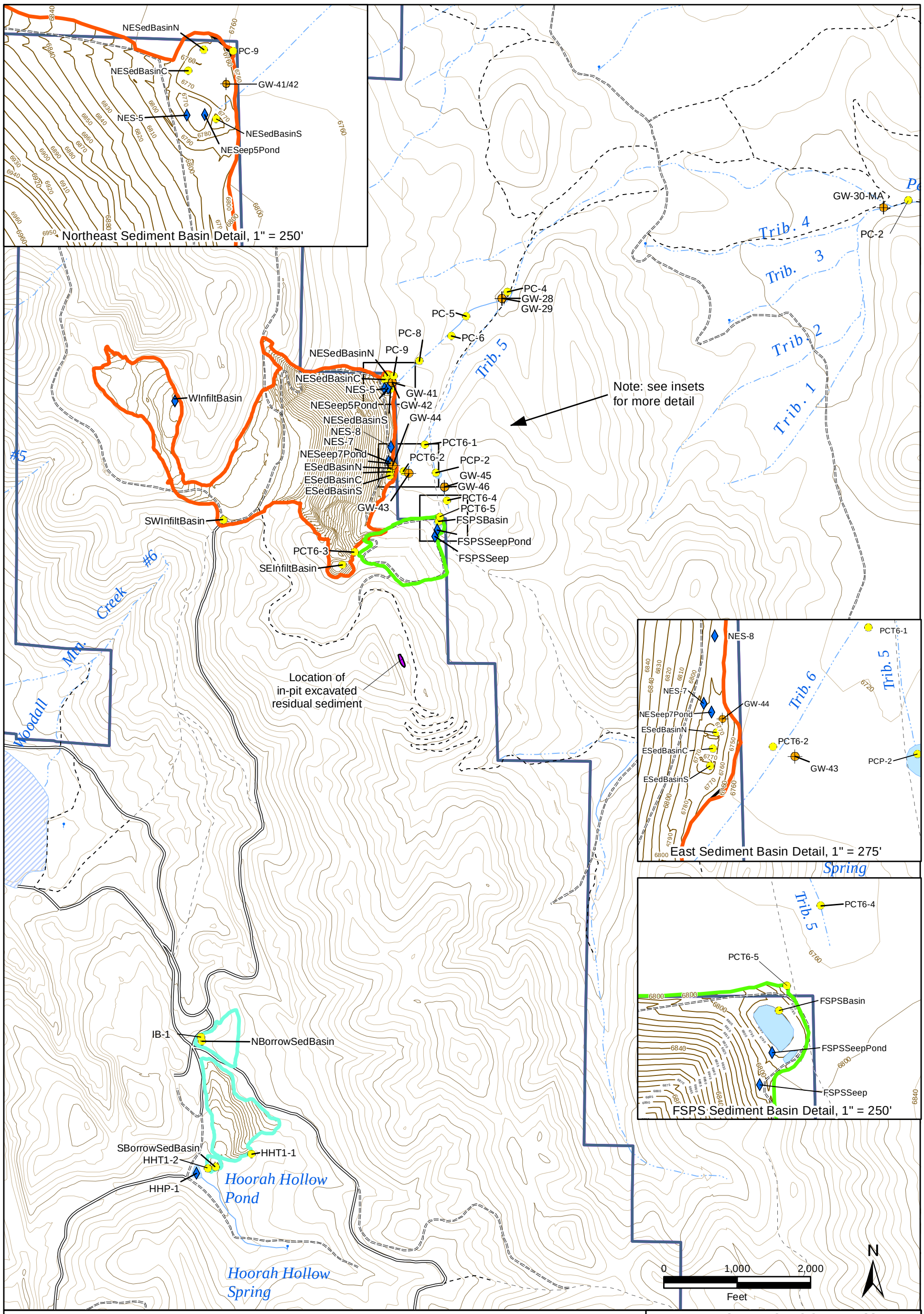

Legend

- Surface Water/Sediment Monitoring Location
- Surface Water Monitoring Location
- Groundwater Monitoring Location
- Sediment Residuals Location
- Minor Road
- Unimproved Road
- Trail (4WD)
- Trail (Other than 4WD)
- Railroad
- Intemittent Stream
- Perennial Stream
- Lake/Pond
- Reservoir
- Swamp/Marsh
- Mine Area
- Non-Mine Area
- FSPS Area Boundary
- NTCRA Area Boundary
- Dinwoody Borrow Areas

J.R. SIMPLOT COMPANY
CONDA/WOODALL MOUNTAIN MINE
PEDRO CREEK SUBBASIN PRSC

FIGURE 4-1

PERFORMANCE MONITORING SAMPLE LOCATIONS

DATE: JUL 21, 2015
BY: KAM/DDZ FOR: JPL

FORMATION ENVIRONMENTAL

S:\GIS\arcprj2\0101139\plt\PedroCreekEarlyAction\PRSCplan\Final\Fig4-1_SampleLocs_REV2.mxd

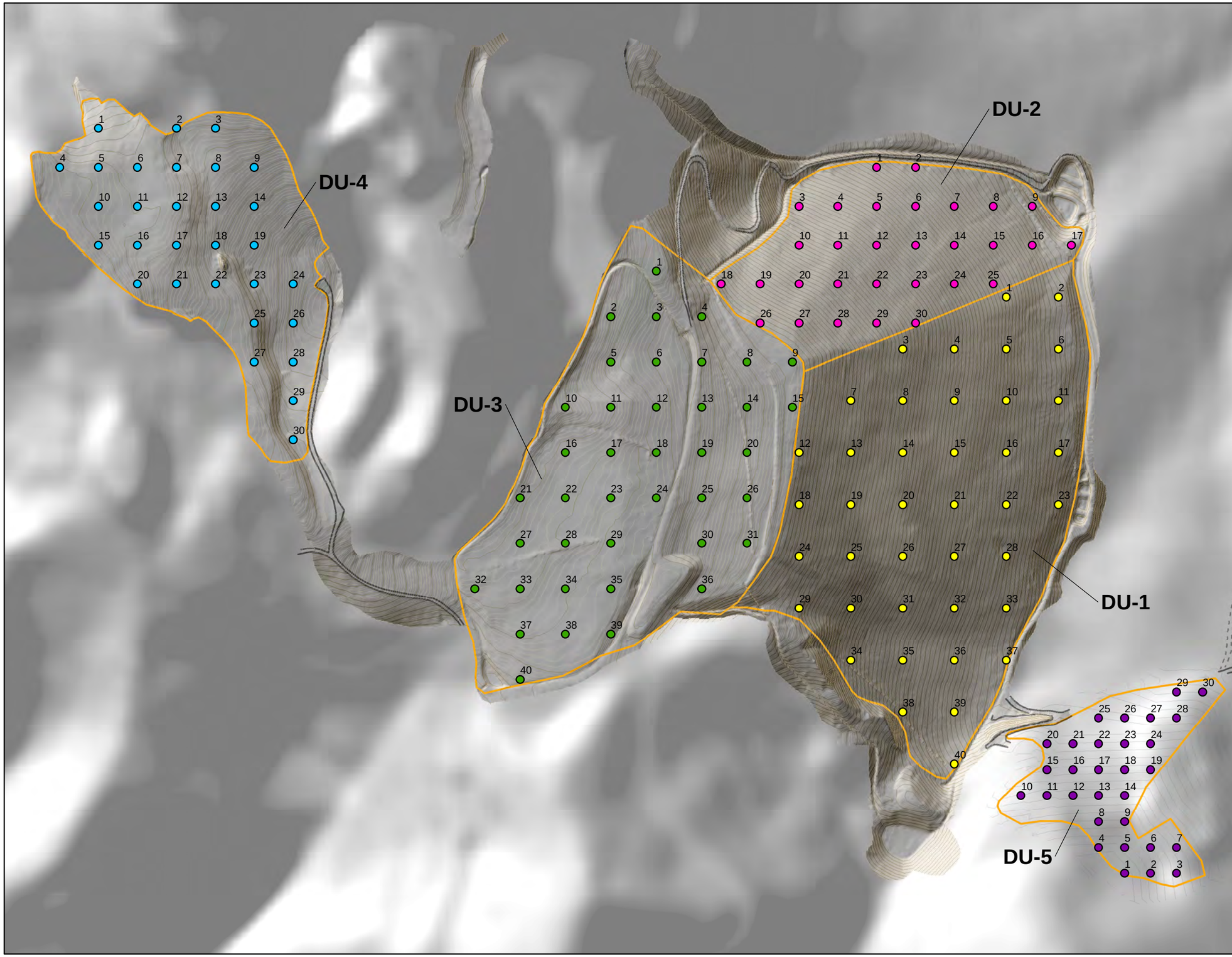

Legend

- DU1_grid_200ft
- DU2_grid_150ft
- DU3_grid_175ft
- DU4_grid_150ft
- DU5_grid_100ft

2014 FINAL As-Built Survey

- Edge of Gravel
- Edge of Dirt Road
- Index Contour (5 ft)
- Non-index Contour (1 ft)
- NTCRA Decision Units (DUs)

N

0 200 400 800
Feet

J.R. SIMPLOT COMPANY
CONDA/WOODALL MOUNTAIN MINE
PEDRO CREEK SUBBASIN PRSC

FIGURE 4-2

DECISION UNITS AND INCREMENTAL SAMPLING GRIDS

DATE: JUL 21, 2015
BY: DDZ | FOR: RPS

FORMATION ENVIRONMENTAL

S:\GIS\arcprj2\010139\plt\PedroCreekEarlyAction\PRSCplan\Final\Fig4-2_NTCRA_FSPS_SampGrid.mxd

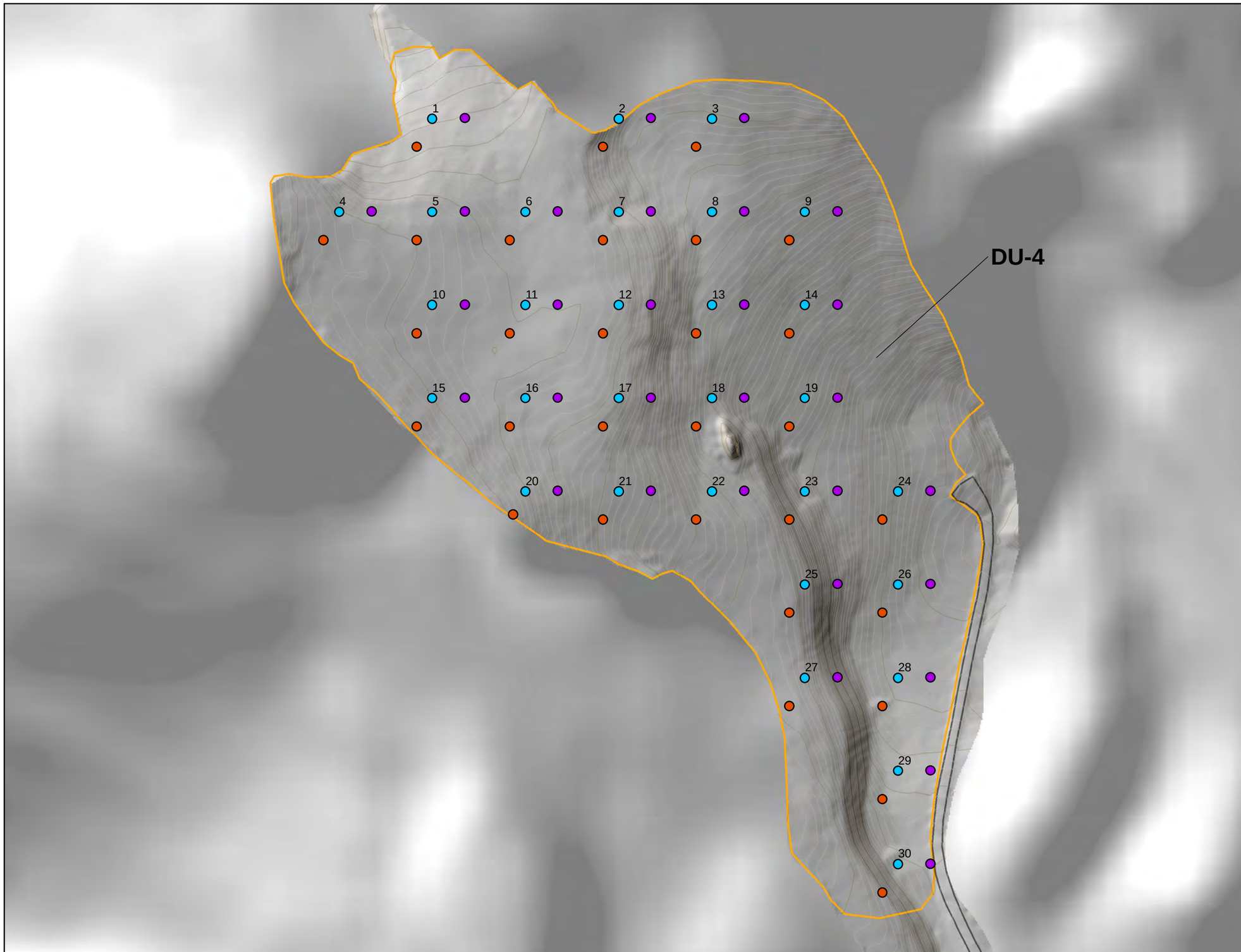

Legend

- DU4 original sample grid
- Duplicates
- Triplicates

2014 FINAL As-Built Survey

- Edge of Gravel
- Edge of Dirt Road
- Index Contour (5 ft)
- Non-index Contour (1 ft)
- NTCRA Decision Units (DUs)

N

0 80 160 320
Feet

J.R. SIMPLOT COMPANY
CONDA/WOODALL MOUNTAIN MINE
PEDRO CREEK SUBBASIN PRSC

FIGURE 4-3

EXAMPLE REPLICATE SAMPLING GRIDS

DATE: JUL 21, 2015
BY: DDZ | FOR: RPS

FORMATION ENVIRONMENTAL

S:\GIS\arcprj2\010139\plt\PedroCreekEarlyAction\PRSCplan\Final\Fig4-3_ExampleSampGrid.mxd

APPENDICES

Appendix A

INSPECTION AND MONITORING FORMS

Appendix B

Standard Operating Procedures
(Electronic Copy on CD)

Appendix C

MANUFACTURER'S INFORMATION
(Electronic Copy on CD)

Appendix D

HASP
(Electronic Copy on CD)

Appendix E

Comment and Response Documents
(Electronic Copy on CD)

Appendix F

Dinwoody Formation Analytical Data
(Electronic Copy on CD)