HWMA/RCRA STORAGE and TREATMENT PERMIT

for the

MATERIALS AND FUELS COMPLEX (MFC)

ATTACHMENT 1 – FACILITY DESCRIPTION

Section D – Process Description
Section D Attachments

EFFECTIVE DATE: OCTOBER 1, 2015

REVISION DATE: JULY 29, 2019

• **CONTENTS**

D. Process Description [IDAPA 58.01.05.008 and 012; 40 CFR 264 and 270] 1

D-1 HWMA Unit Process Description Overview 1

D-1(a) Basic HW/MW Service Descriptions 3

D-1(a)(1) Storage of HW/MW 3

D-1(a)(2) Verification Sampling of HW/MW 4

D-1(a)(3) Repackaging HW/MW 5

D-1(a)(4) Absorption of Free Liquids in HW/MW 6

D-1(a)(5) Neutralization of Corrosive HW/MW 7

D-1(a)(6) Solidification/Stabilization of HW/MW.....7

D-1(a)(7) Deactivating Ignitable and Reactive HW/MW.....8

D-1(a)(8) Heating and Melting for Repackaging 9

D-1(b) Flow Path of HW/MW Services.....9

D-1(b)(1) HW/MW Generator Specifications 9

D-1(b)(2) HWMA Unit Approval to Accept HW/MW 9

D-1(b)(3) HW/MW Receipt at HWMA Units 9

D-1(b)(4) Transfer of HW/MW to Storage.....10

D-1(b)(5) Verification, Repackaging, and/or Container/Tank or Debris Treatment 10

D-1(b)(6) Transfer of HW/MW to Storage Following Verification, Repackaging, and/or Container, Tank or Debris Treatment 10

D-1(b)(7) HW/MW Shipment to Generator or Disposal Facility.....10

D-2 Containers and Container Management Practices [IDAPA 16.01.05.012; 40 CFR 270.15] 11

D-2(a) Containers With and Without Free Liquids.....15

D-2(a)(1) Description of Containers [IDAPA 58.01.05.008; 40 CFR 264.171 and 264.172].....15

D-2(a)(2) Container Management Practices [IDAPA 58.01.05.008; 40 CFR 264.173] 16

D-2(a)(2)(a) Acceptance Criteria 16

D-2(a)(2)(b) Labeling 17
D-2(a)(2)(c) Handling 17
D-2(a)(2)(d) Container Integrity 18
D-2(a)(2)(e) Waste Placement 18
D-2(a)(2)(f) Maintenance during Storage 19
D-2(a)(2)(g) HWMA Unit Decontamination/Cleaning Between Waste Containers 19
D-2(a)(2)(h) Inventory and Accountability 19
D-2(a)(2)(i) Container Treatment 20
D-2(a)(2)(j) Container Management during Verification, Repackaging, and/or Container Treatment 23
D-2(a)(2)(k) Operating Procedures 23
D-2(a)(3) Secondary Containment System Design and Operation [IDAPA 58.01.05.012 and 58.01.05.008; 40 CFR 270.15(a)(1) and 264.175(a)] 24
D-2(a)(3)(a) Requirements for the Base or Liner to Contain Liquids [IDAPA 58.01.05.008; 40 CFR 264.175(b)(1)] 25
D-2(a)(3)(b) Containment System Drainage [IDAPA 58.01.05.012 and 58.01.05.008; 40 CFR 270.15(a)(2) and 264.175(b)(2)] 27
D-2(a)(3)(c) Containment System Capacity [IDAPA 58.01.05.012 and 58.01.05.008; 40 CFR 270.15(a)(3) and 264.175(b)(3)] 28
D-2(a)(3)(d) Control of Run-On [IDAPA 58.01.05.012 and 58.01.05.008; 40 CFR 270.15(a)(4) and 264.175(b)(4)] 30
D-2(a)(3)(e) Removal of Liquids from Containment Systems [IDAPA 58.01.05.012 and

58.01.05.008;
40 CFR 270.15(a)(5) and
264.175(b)(5)] 30

D-2(a)(4) Test for Free Liquids [IDAPA 58.01.05.012;
40 CFR 270.15(b)(1)].....31

D-2(a)(5) Container (without free liquid) Storage Drainage
[IDAPA 58.01.05.012 and 58.01.05.008; 40
CFR 270.15(b)(2) and 264.175(c)].....31

D-3 Basic Treatment System Description 32

D-3(a) SCMS Treatment System Descriptions 32

D-3(a)(1) Water Wash System 33

D-3(a)(2) Scrubber Water System 37

D-3(a)(3) Carbonation System.....38

D-3(a)(4) Solidification System.....39

D-3(a)(5) Support Systems 41

D-3(a)(5)(a) Ventilation System 41

D-3(a)(6) Service Water System.....42

D-3(a)(7) CO_2 System 43

D-3(a)(8) Steam and Condensate System.....43

D-3(a)(9) Compressed Air System 43

D-3(a)(10) Nitrogen System 44

D-3(a)(11) Fire Suppression System 44

D-4 Tank Systems [IDAPA 58.01.05.012; 40 CFR 270.16].....45

D-4(a) SCMS Existing Tank Systems.....45

D-4(a)(1) Assessment of Existing Tank System Integrity
[40 CFR 270.16(a), 264.191] 46

D-4(a)(2) External Corrosion Protection
[IDAPA 58.01.05.012 and 58.01.05.008;
40 CFR 270.16(e) and 264.192(f)].....51

D-4(b) New Tank Systems [IDAPA 58.01.05.012; 40 CFR 270.16] 52

D-4(b)(1) Assessment of New Tank System Integrity
[IDAPA 58.01.05.012 and 58.01.05.008;
40 CFR 270.16(a) and 264.192(a)] 52

D-4(b)(2) External Corrosion Protection [IDAPA 58.01.05.012 and 58.01.05.008; 40 CFR 270.16(e) and 264.192(f)] 53

D-4(b)(3) Description of Tank System Installation and Testing Plans and Procedures [IDAPA 58.01.05.012 and 58.01.05.008; 40 CFR 270.16(f) and 264.192(b), (d), and (e)] 54

D-4(b)(4) Dimensions and Capacity of Each Tank [IDAPA 58.01.05.012; 40 CFR 270.16(b)] 55

D-4(b)(4)(a) Water Wash System—Water Wash Vessel 55

D-4(b)(4)(b) Scrubber Water System—Scrubber Water Tank 55

D-4(b)(4)(c) Carbonation System—Carbonation Vessel 55

D-4(b)(5) Description of Feed Systems, Safety Cutoff, Bypass Systems, and Pressure Controls [IDAPA 58.01.05.012; 40 CFR 270.16(c)] 55

D-4(b)(5)(a) Water Wash System 55

D-4(b)(5)(b) Scrubber Water System 56

D-4(b)(5)(c) Carbonation System 57

D-4(b)(6) Diagram of Piping, Instrumentation, and Process Flow [IDAPA 58.01.05.012; 40 CFR 270.16(d)] 57

D-4(b)(7) Containment and Detection of Releases [IDAPA 58.01.05.008; 40 CFR 264.193] 58

D-4(b)(8) Plans and Description of the Design, Construction, and Operation of the Secondary Containment System [IDAPA 58.01.05.012 and 58.01.05.008; 40 CFR 270.16(g) and 264.193(b) through (f)] 58

D-4(b)(8)(a) Tank Age Determination [IDAPA 58.01.05.008; 40 CFR 264.193(a)] 59

D-4(b)(8)(b) Requirements for Secondary Containment and Leak Detection [IDAPA 58.01.05.012 and 58.01.05.008; 40 CFR 270.16(g) and 264.193(b) and (c)] 59

D-4(b)(8)(c) Requirements for External Liner, Vault, Double-Walled Tank or

Equivalent Device [IDAPA 58.01.05.012 and 58.01.05.008; 40 CFR 270.16(g) and 264.193(d) and (e)] 62

D-4(b)(8)(d) Secondary Containment and Leak Detection Requirements for Ancillary Equipment [IDAPA 58.01.05.012 and 58.01.05.008; 40 CFR 270.16(g) and 264.193(f)] 62

D-4(b)(9) Controls and Practices to Prevent Spills and Overflows [IDAPA 58.01.05.012 and 58.01.05.008; 40 CFR 270.16(I) and 264.194(b)].....62

D-4(b)(9)(a) Scrubber Water System 63

D-4(b)(9)(b) Carbonation System.....63

D-5 Miscellaneous Units [IDAPA 58.01.05.08 and 012; 40 CFR 264.601 and 270.23].....64

D-5(a) Description of Miscellaneous Units [IDAPA 58.01.05.012; and 270.23 (a)(1)].....64

D-5(b) Environmental Performance Standards for Miscellaneous Units [IDAPA 58.01.05.08; 40 CFR 264.601].....64

D-5(c) Miscellaneous Unit Waste [IDAPA 58.01.05.08; 40 CFR 264.601(a)(1), 264.601(b)(1), 264.601(c)(1)] 65

D-5(d) Containment System [IDAPA 58.01.05.08 and 012; 40 CFR 264.601(b)(2) and 270.23 (a)(2)].....67

D-5(d)(1) Carbon-Steel Installed Liners 69

D-5(d)(2) Inner Containers 71

D-5(d)(3) Liner Radiation Shielding.....73

D-5(d)(4) Cathodic Protection System 74

D-5(e) Site Air Conditions [IDAPA 58.01.05.08 and 012; 40 CFR 264.601(c)(4) and (5), 270.23 (b)].....76

D-5(f) Prevention of Air Emissions [IDAPA 58.01.05.08 and 012; 40 CFR 264.601(c)(2), 270.23(a)(2)].....77

D-5(g) Operating Standards [IDAPA 58.01.05.08; 40 CFR 264.601(c)(3), 270.23(a)(2)].....77

D-5(g)(1) Inner Container Handling 78

D-5(g)(2) Inner Container Transport 78

D-5(g)(3) Inner Container Loading and Damage Prevention.....79

D-5(g)(4) Liner Removal 80

D-5(h) Site Hydrogeologic Conditions [IDAPA 58.01.05.08 and 012; 40 CFR 264.601(a)(2),(3),(4), 264.601(b)(3),(5), 270.23(b)] 81
D-5(i) Site Precipitation [IDAPA 58.01.05.08; 40 CFR 264.601(b)(4)] 82
D-5(j) Ground-Water Usage [IDAPA 58.01.05.08; 40 CFR 264.601(a)(5)] 82
D-5(k) Surface Waters [IDAPA 58.01.05.08; 40 CFR 264.601(b)(6),(7)] 83
D-5(l) Area Land Use [IDAPA 58.01.05.08 and 012; 40 CFR 264.601(a)(6), 264.601(b)(9), 270.23(b)] 83
D-5(m) Migration of Waste Constituents [IDAPA 58.01.05.08; 40 CFR 264.601(a)(7)] 83
D-5(n) Evaluation of Risk to Human Health and the Environment [IDAPA 58.01.05.08; 40 CFR 264.601(a)(8), (9), 264.601(b)(10), (11), 264.601(c)(6), (7)] 88

- **TABLES**

Table D-1. Examples of Containers Accepted at HWMA Units 11
Table D-2. HWMA Unit HW/MW Container Labels. 17
Table D-3. Secondary Containment Capacity of Fabricated Spill Pan. 28
Table D-4. Secondary Containment Capacity of SWB. 29
Table D-5. Basic System Descriptions. 33
Table D-6. Existing Tank System Feed and Ancillary Systems. 46
Table D-7. New Tank System Feed and Ancillary Systems. 52
Table D-8. SCMS Low Bay Pit Secondary Containment Capacity. 60
Table D-9. Physical and chemical properties of constituents that may be present at RSWF. 66
Table D-10. Corrosion rates of steel in soil and soil corrosion classes. 82

- **ATTACHMENTS**

D-1 HWMA Unit Miscellaneous Containers
D-2 HWMA Unit Container Labeling
D-3 Hazardous Waste Acceptance Checklists
D-4 Manufacturer Information
D-5 Photos of HWMA Unit Secondary Containment Devices
D-6 HFEF Secondary Containment
D-7 SCMS Water Wash and Carbonation Processes Process Flow Diagram
D-8 MFC Standard Process and instrumentation Symbols
D-9 SCMS Process and instrumentation Diagrams
D-10 Photograph of SCMS Water Wash Vessel and Venturi Scrubber
D-11 Drawing of SCMS Water Wash Vessel

D-12 Drawing of SCMS Water Wash Vessel Burn Pan
D-13 Drawing Showing Treatment of Debris and Container Residuals in SCMS Water Wash Vessel
D-14 Drawing of SCMS Venturi Scrubber General Arrangement
D-15 Drawing of SCMS Moisture Separator EBR-II SCMS Water Wash installation Moisture Separator
D-16 Drawing of SCMS HEPA Filters Process Ventilation System SCMS Facility No. 793 Plans and Sectors and EBR-II SCMS Water Wash Installation Plan and EL
D-17 Photograph of SCMS Scrubber Water Tank
D-18 Drawing of SCMS Scrubber Water Tank
D-19 Drawing of SCMS Scrubber Water Tank and Pumps- EBR-II SCMS Water Wash installation Piping Plan
D-20 Drawing of SCMS Water Wash System Control Panel Assembly and NaOH Meter Schematic
D-21 Photograph of SCMS Carbonation Vessel
D-22 Drawing of SCMS Carbonation Vessel Containment Box Liquid System
D-23 Photograph of SCMS Fixed Solidification Station
D-24 Example of Secondary Containment Overpack for 55-Gal Drum
D-25 SCMS Carbonation Vessel Written Assessment and Certification of System Installation
D-26 Drawing of SCMS Pit Plan and Details
D-27 Documentation of Age of SCMS Water Wash
D-28 SCMS Secondary Containment
D-29 Field Testing Report for Cathodic Protection of the RSWF Liners at ANL-W Site
D-30 Drawing of RSWF Drainage System and Assessment of Saturated Soil Conditions on the RSWF Cathodic Protection System
D-31 Drawing of Liner Configuration
D-32 Drawings of Liner Types
D-33 Drawings of Shield Plugs
D-34 Drawing of RSWF Cathodic Protection System
D-35 2001Corrosion Assessment Report for RSWF Cathodic Protection System
D-36 Photograph of RSWF Transport Cask
D-37 Illustration of Cargo Containers
D-38 Photograph of Interim Storage Containers
D-39 Drawing of Interim Storage Containers
D-40 Drawing of Topography for North Fenced Area and RSWF Staging/Storage Area

D. Process Description [IDAPA 58.01.05.008 and 012; 40 CFR 264 and 270]

In accordance with the requirements of Idaho Administrative Procedures Act (IDAPA) 58.01.05.008 and 012; 40 Code of Federal Regulations (CFR) 264 and 270, this section of the Hazardous Waste Management Act (HWMA)/Resource Conservation Recovery Act (RCRA) Permit Application provides process-related information for the HWMA units described below. For reference, the locations of the HWMA units discussed in this section are shown in Attachment 1, Section B, MFC Facility Description.

The information provided in this section is organized by subsection as follows:

— Subsection D-1, HWMA Unit Process Description Overview

— Subsection D-2, Containers and Container Management Practices

— Subsection D-3, Basis System Descriptions

— Subsection D-4, Tanks and Tank Management Practices

— Subsection D-5, Miscellaneous Unit Management Practices.

D-1 HWMA Unit Process Description Overview

The MFC HWMA units will be used to perform a variety of processes (services) for on-Site[1] hazardous waste/mixed waste (HW/MW) generators. The services conducted through operations at the MFC HWMA units allow safe and efficient handling of characteristic HW/MW (ignitable, reactive, corrosive, toxic metal) and/or listed HW/MW.

The HWMA unit waste acceptance criteria (WAC) will determine the types of HW/MW that can be received at a HWMA unit and the types of HW/MW services that can be performed.

[1]. On-Site means HW/MW generated at a facility physically located on the INL site or HW/MW from a generator that is a contractor or subcontractor, and physically located on the INL site, of the INL Management and Operations contractor.

The services performed at the HWMA units include:

— Storage of HW/MW in containers and/or tanks

- Prior to, during and/or following verification/sampling, repackaging and/or treatment.

— Verification or sampling of HW/MW to facilitate

- Use in bench scale studies
- Storage and/or treatment at an MFC or off-Site HWMA unit
- Acceptance at INL or off-Site disposal facilities.

— Repackaging of HW/MW to facilitate

- Use in bench scale studies
- Storage and/or treatment at an MFC or off-Site HWMA unit
- Acceptance at INL or off-Site disposal facilities.

— Container treatment of HW/MW including

- Absorption (waste with free liquids)
- Neutralization (corrosive wastes)
- Solidification (liquid/sludge wastes)
- Stabilization (liquid/sludge waste with metals)
- Melting and draining (reactive metals)
- Deactivation (corrosive/reactive waste).

— Tank treatment of HW/MW including

- Neutralization (corrosives)
- Deactivation (ignitable/reactive waste).

— Debris treatment including

- Water spraying and water washing.

The maximum HW/MW storage capacities of each HWMA unit and the annual quantities of the HW/MW to be managed (stored, verified/sampled, repackaged and/or treated) at the HWMA units are provided in Attachment 1, Facility Description, Part A, Sections 7 and 9. A matrix of the EPA hazardous waste numbers (HWNs) (also known as waste codes) that can be received/managed at each HWMA unit, the HW/MW services (processes) performed in each HWMA unit, and the types HW/MW types (forms) accepted is provided in Attachment 1, Facility Description, Section B, MFC Facility Description, Table B-1.

Brief descriptions of the services performed at the HWMA units (HW/MW storage, verification/sampling, repackaging and/or treatment) are provided below.

D-1(a) Basic HW/MW Service Descriptions

D-1(a)(1) Storage of HW/MW

HW/MW, with and without free liquids, may be received and stored in containers and tanks while in the HWMA units prior to, during and/or following verification/sampling, repackaging and/or treatment. The HW/MW may be stored in original containers or repackaged containers or in process equipment (tanks/containers) during treatment. Services performed at the HWMA units during storage may include inert atmosphere container opening, sampling prior to treatment, nondestructive assay (NDA) and safety evaluations. Because several of the HWMA units are heated and air filtered, they are well suited for these activities.

The ability to store the HW/MW in the HWMA units may be necessary following generation and/or receipt of the HW/MW prior to the preparation of HW/MW for final disposal.

The types of containers and tanks that may be received/stored at the HWMA units include, but are not limited to, the following:

— Cans, drums, boxes and bins

- 1 pint to 8 gal cans
- 5 to 71 gal drums
- 85 to 100 gal overpack drums
- Standard/nonstandard waste boxes
- Steel waste bins

- Wooden waste boxes
- Steel container assemblies (HFEF-5 and Sodium Loop Safety Facility[2] [SLSF] cans).

— Operational components and process equipment

- Piping/pumps
- Heat exchangers
- Cold/nuclide traps
- Shipping vessels
- Transfer tanks
- Storage tanks
- Process tanks.

The MFC HWMA units that can store HW/MW are identified in Attachment 1, Section B, MFC Facility Description, Table B-1. HWMA/RCRA designated container or tank storage areas within each of the HWMA units are shown in the facility arrangement schematics provided in Attachment 1, Section B, MFC Facility Description, and its associated attachments. The maximum storage capacities for each HW/MW container and/or tank storage area are also listed on the referenced schematics.

D-1(a)(2) Verification Sampling of HW/MW

HW/MW stored and/or received may require verification and/or sampling prior to repackaging, treatment and/or final disposal. The activities may include the following:

— Visual examination (fingerprint analyses) of the HW/MW to ensure that the container contents have been correctly identified through process knowledge and/or non-intrusive analysis

— Sampling and analysis of the HW/MW while in the original container to establish and/or validate HW/MW characteristics

— Removal of HW/MW samples for testing and analysis purposes, NDA and safety evaluations.

[2] The Sodium Loop Safety Facility (SLSF) was located at the Experimental Test Reactor (ETR) and was used to perform experiments with sodium coolant from Fast Breeder Reactor fuel experiments intended to fail-test fuel pins under controlled conditions. SLSF containers were designed to contain HW/MW from this facility.

Several HWMA units are well suited for these activities because they are heated and air filtered. Following verification/sampling activities, the HW/MW may be repackaged and will then be stored, and/or treated, or transferred to a HWMA unit.

HW/MW certifications, data, and samples all result from the process of conducting HW/MW verification and/or sampling. Data is reduced and validated in accordance with generator requirements and provided to the generator. Samples are sent to qualified laboratories for testing/analysis. Following verification and/or sampling activities the HW/MW may be returned to the generator.

The MFC HWMA units that can perform HW/MW verification and/or sampling services are identified in Attachment 1, Section B, MFC Facility Description, Table B-1.

D-1(a)(3) Repackaging HW/MW

HW/MW stored and/or received may require repackaging. This involves removal and transfer of HW/MW from the original container to a new container, by the treatment facility, under, but not limited to, the following circumstances:

- HW/MW is stored in nonstandard containers (i.e., vessel, cold trap, tank) or in a form incompatible with on-Site or off-Site treatment unit equipment or processes (i.e., solid, liquid)
- HW/MW may require sorting and segregating (followed by repackaging) to meet an on-Site or off-Site treatment and/or disposal facility's WAC
- Original HW/MW container is unacceptable for storage and/or disposal due to deterioration or configuration.

Repackaging activities will include:

- Sorting and segregating the HW/MW by waste type (i.e., solid, liquid, debris) into a container compatible for storage or treatment and disposal
- Transferring the HW/MW from one container to another container while meeting the definition of treatment (i.e., sizing, compaction, etc)
- Heating/melting (if necessary) the HW/MW using portable heaters
- Transferring (pumping/draining) the HW/MW from the original container (using a transfer system such as a vacuum pump) into a container compatible for storage or treatment processes.

These repackaging activities will typically be performed within a containment/confinement consisting of a work tent, controlled area and/or glovebox for radiological control.

The MFC HWMA units that can perform HW/MW repacking services are identified in Attachment 1, Section B, MFC Facility Description, Table B-1.

D-1(a)(4) Absorption of Free Liquids in HW/MW

HW/MW stored and/or received for verification/sampling and/or repackaging may have limited amounts of free liquids that require absorption to meet storage, transport and/or waste disposal criteria. If liquid is found in HW/MW containers during verification/sampling and/or repackaging activities, the liquid will be absorbed so that the containers can safely be stored, transported and/or disposed. Specifically during verification and/or repackaging activities, any liquid will be absorbed by rearranging the absorbent originally packed in the drum. If rearranging the existing absorbent is inadequate, additional clean absorbent will be placed in the container or, if necessary due to volume increase, the additional absorbent and the HW/MW will be transferred to a larger container. If liquid is found in a sludge drum prior to core sampling, its volume is determined. A sample of the liquid may be drawn and may be shipped to a laboratory for analysis. After coring, the unused portion of the core sample is returned to the drum. Absorbent will then be added in quantities sufficient to absorb the free liquid.

Following the treatment, free liquid absorption effectiveness will be determined by conducting a visual inspection to ensure no free liquids are present in accordance with specified requirements (i.e., disposal or transport).

The MFC HWMA units that can perform HW/MW absorption services are identified in Attachment 1, Section B, MFC Facility Description, Table B-1.

D-1(a)(5) Neutralization of Corrosive HW/MW

HW/MW stored and/or received may require neutralization or pH adjustment (2 < pH < 12.5) following an initial treatment process or prior to solidification/stabilization in preparation for disposal. These situations could include, but are not limited to, corrosive HW/MW produced in a HWMA unit (e.g, the Sodium Components Maintenance Shop (SCMS)) or containerized liquid corrosive HW/MW received at a HWMA unit. These corrosive solutions or liquids can be neutralized by processes such as (1) carbonating the hydroxide solution with carbon dioxide (CO_2) in the SCMS carbonation system, or by (2) adding acids or bases to neutralize the corrosive liquids. Neutralization will be performed to within an acceptable pH range (2 < pH < 12.5) to deactivate the corrosive characteristic and/or to obtain the optimum pH for subsequent solidification/stabilization of the neutralized solutions.

Following neutralization, pH will be determined by conducting pH analysis to ensure the corrosive solutions meet HWMA/RCRA Universal Treatment Standards (UTS).

The MFC HWMA units that can perform HW/MW neutralization are identified in Attachment 1, Section B, MFC Facility Description, Table B-1. HWMA/RCRA designated container and/or tank treatment areas within each of the HWMA units are shown in the facility arrangement schematics provided in Attachment 1, Section B, MFC Facility Description. The maximum daily process rates for each HW/MW container and/or tank treatment area are provided in Attachment 1, Facility Description, Part A.

D-1(a)(6) Solidification/Stabilization of HW/MW

Solidification or stabilization will be performed, as necessary, to meet UTS and/or disposal facility WAC. The solidification/stabilization procedure and the type and amount of solidification/stabilization agent used are based on the analysis of a representative sample of the waste and/or toxic metal contaminated HW/MW solution taken prior to solidification/stabilization. The solidification/stabilization procedure/agent used falls under one of the following practices:

- A previously approved Waste Analysis Plan (WAP) and treatment procedure
- An approved WAP and treatment procedure determined by bench-scale testing

— Recommended usage and specifications provided by agent manufacturers. Solidification/stabilization agents may include natural materials such as vermiculite, silicates, clay, or synthetic materials such as absorbent polymers.

Solutions requiring solidification/stabilization are transferred directly to an empty container or to a fixed solidification system. Solidification/stabilization can also be performed in the original HW/MW container, if appropriate.

To develop a solidification/stabilization recipe, a representative sample is taken and is then analyzed to ensure that the HW/MW meets UTS. Solidified samples may be visually verified to no longer contain free liquids.

The MFC HWMA units that can perform HW/MW solidification/stabilization are identified in Attachment 1, Section B, MFC Facility Description, Table B-1. HWMA/RCRA designated container and/or tank treatment areas within each of the HWMA units are shown in the facility arrangement schematics provided in Attachment 1, Section B, MFC Facility Description. The maximum daily process rates for each HW/MW container and/or tank treatment area are provided in Attachment 1, Facility Description, Part A.

D-1(a)(7) Deactivating Ignitable and Reactive HW/MW

The ignitable and reactive characteristics of HW/MW can be deactivated (via water reaction) in a controlled manner in the SCMS water wash system. In this system, the ignitable and reactive HW/MW reacts with water and ultimately forms a hydroxide solution as illustrated in the following reaction (as shown for sodium [Na]):

- $Na + H_2O \rightarrow NaOH + 2H_2$

The hydroxide solution produced from this direct reaction with water drains into the SCMS scrubber water tank.

Following the deactivation, a representative sample of the hydroxide solution may be taken and analyzed to ensure that UTS can be met.

The MFC HWMA units that can perform deactivation are identified in Attachment 1, Section B, MFC Facility Description, Table B-1. HWMA/RCRA designated tank treatment areas within each of the HWMA units are shown in the facility arrangement schematics provided in Attachment 1, Section B, MFC Facility Description. The maximum daily process rates are provided in Attachment 1, Facility Description, Part A.

D-1(a)(8) Heating and Melting for Repackaging

HW/MW received or stored in non-standard containers such as shipping vessels, process vessels, or tanks, may be incompatible with a HWMA unit's treatment system or equipment (i.e., SCMS) and may require transfer or repackaging into a compatible feed or transfer container prior to continued treatment.

Heating and melting of the HW/MW (e.g., Na) may be necessary using portable strap heaters or steam. Once the HW/MW is melted, it can be transferred by pressurizing the container, pumping and/or vacuum draining from the original container into a container compatible with the HWMA unit's treatment processes. This activity may be performed within a containment consisting of a work tent and/or glovebox for radiological control.

D-1(b) Flow Path of HW/MW Services

The purpose of this subsection is to briefly describe the services that the MFC HWMA units provide. Brief descriptions of these services are provided in following subsections.

D-1(b)(1) HW/MW Generator Specifications

To acquire HWMA unit services, the generator specifies the desired services and specific requirements that are needed. HWMA unit personnel then determine whether the desired services can be performed. If HWMA unit personnel determine the desired services can be performed, then the generator provides information needed to verify that HWMA unit WAC can be met. This detailed information is provided to the Integrated Waste Tracking System (IWTS) Profile as described in Attachment 2, Section C, Waste Analysis Plan.

D-1(b)(2) HWMA Unit Approval to Accept HW/MW

HWMA unit personnel review and approve transfer/shipments of HW/MW to the HWMA unit based on the generator's certifications.

D-1(b)(3) HW/MW Receipt at HWMA Units

Upon HW/MW receipt at a HWMA unit transfer area, HW/MW containers are inspected to ensure that received HW/MW is consistent with the generator's description of the HW/MW (such as labels, identification numbers, container condition, and radiation levels). Any noncompliant conditions or inconsistencies are documented as required by HWMA unit-specific procedures and the generator is

contacted for assistance in the resolution. If discrepancies cannot be resolved, HW/MW is returned to the generator.

D-1(b)(4) Transfer of HW/MW to Storage

If as-received HW/MW is acceptable, it is transferred into the storage area until the requested services can be performed.

D-1(b)(5) Verification, Repackaging, and/or Container/Tank or Debris Treatment

Containers of HW/MW are transferred from the HWMA unit where it is stored to the HWMA unit where it will be opened and/or transferred to perform verification, repackaging, and/or container/tank or debris treatment. A variety of products result from the process of conducting verification, repackaging, and/or treatment. These include data, samples, repackaged generator HW/MW, and/or treated final HW/MW packaged for final disposal. Data is reduced and validated in accordance with generator requirements and provided to the generator. Samples are sent to qualified laboratories for testing/analysis. HW/MW is then packaged and transferred/shipped to the generator or another facility for disposal.

D-1(b)(6) Transfer of HW/MW to Storage Following Verification, Repackaging, and/or Container, Tank or Debris Treatment

Following completion of verification, repackaging, and/or treatment, the HW/MW is transferred to appropriate storage (HWMA/non-HWMA) until it is transferred/shipped back to the generator or to a disposal facility.

D-1(b)(7) HW/MW Shipment to Generator or Disposal Facility

Containers of verified, repackaged, and/or treated HW/MW are prepared for transfer/shipment to the generator or disposal facility and may be placed in a staging or transfer area, pending shipment. Appropriate documentation is prepared for the HW/MW to be returned to the generator or disposal facility.

In addition, fabricated overpacks or containers that are themselves hazardous (i.e., containers containing lead shot for shielding) will be disposed of in accordance with State of Idaho HW/MW management regulations, once the containers are no longer useable.

D-2 Containers and Container Management Practices [IDAPA 16.01.05.012; 40 CFR 270.15]

HW/MW (with and without free liquids) are currently stored or received from a variety of on-Site facilities as described in Attachment 1, Section B, MFC Facility Description. The HW/MW containers may be stored prior to, during, and/or following verification, repackaging, and/or treatment.

Types of Containers. The types of containers that may be received/stored at HWMA units are listed in Subsection D-1(a)(1) and summarized in Table D-1.

Storage Area and Maximum Capacities. The maximum container storage capacity for each HMWA unit is provided in Attachment 1, Facility Description, Part A. Container storage areas and maximum container storage capacities are also shown on the HWMA unit facility arrangement schematics provided in Attachment 1, Section B, MFC Facility Description.

The different types of HW/MW containers currently stored in HWMA units or in other on-Site facilities that may be transferred to HWMA units for storage and treatment are described in the following paragraphs. All containers used for storing HW/MW are compatible with the waste stored in the containers. Container types are selected after ensuring compatibility of the container with the waste type and with transportation requirements of receiving facilities. Photographs of several different types of containers described in Table D-1 are provided in the Permit Application in Attachment D-1.

Table D-1. Examples of Containers Accepted at HWMA Units.

Container Type	Description
Department of Transportation (DOT) Carbon-Steel Drums	Carbon-steel, 71-gal DOT-approved 7A closed-head drums that are externally-coated 16 gauge carbon steel with a crimped cover closure and 2 in. steel plug in the head. The internal dimensions of the drums are 22.5-in., diameter, by 33.25-in. tall. Carbon-steel, 55-gal DOT-approved 17C and UN-approved 1A2-Y1.7/150 open-head drums that are externally-coated 16 gauge carbon steel with a 2-in. steel plug in the head. The internal dimensions of the drums are 22.5-in., diameter, by 33.25-in. tall. These drums may have installed 90-mil molded polyethylene liners with an open or closed head.

Container Type	Description
DOT High-Density Polyethylene Drums and Pails	The polyethylene drums are high-density polyethylene, 55-gal, UN-approved 1H1/Y1.9/100 closed-head drums with threaded closure. The internal dimensions of the drums are 23.25-in., diameter, by 33.25-in. tall. The pails are high-density polyethylene, 5-gal, UN-approved 1H1/X1.8/100 closed-head pails with threaded closure and an external handle. The internal dimensions of the pails are 14.75-in., diameter, by 11.6-in. tall. Other types of drums and pails may be used to store liquids in HWMA units. Container types are selected after ensuring compatibility of the container with the HW/MW described on the IWTS Profile and with transportation and WAC defined by HWMA units or another receiving facility.
DOT Steel Bins	A rectangular 12-gauge steel bin used for shipment of waste or DOT-approved containers of waste and meets the requirements of 49 CFR 178.350 (DOT 7A). When used as an "overpack," it holds eight 55-gal drums in two layers of four drums each, or ten 30-gal drums in two layers of five drums each. The bins are nominally 4 x 5 x 6 ft. This category covers a range of sizes and some structural variations. At the time of use, one bin type, entitled M-III, met DOT 7A requirements. The M-III bins now meet DOT requirements for a strong-tight container.
DOT Steel Box TX-4	A mild-steel-welded construction box, developed by Lawrence Livermore National Laboratory, with a gasketed bolted closure that is used in packaging contact-handled transuranic (CH TRU) waste. The container is a steel sheet supported by an external framework of four 4 x 2-in. square tubing (the container corners are reinforced with 2-in. angle stock, skip welded). Four 3-in. steel channels support the container, allowing standard forklift access. This box comes in a range of sizes ranging from 74 to 92-in. long, 46 to 52-in. wide, and 36 to 57-in. high. This box may be lined with two 40-mil. or one 80-mil. Polyvinyl chloride (PVC) liner. The top of the liner is then folded over the top and outside of the box and secured with duct tape.
Standard Waste Box (SWB)	A steel container that is nominally 71 x 55 in. and 37-in. tall. This box may be used to package waste or to overpack any container that does not meet the WAC as long as the dimensions are compatible. The lid is then bolted to the box.

Container Type	Description
DOT 7A Steel Overpack Box	A box constructed of carbon steel supported by an external framework of four 4 x 2-in. square tubing (container corners are reinforced with 2-in. angle stock). It may be used for overpacking plywood boxes and damaged fiber-reinforced plywood (FRP) boxes. Two 2 x 1-in. steel channels support the container for forklift access. The dimensions of this box are 92 x 56 in. and 55-in. tall. A variety of other sizes may be used (i.e., special sizes will be fabricated to handle a variety of overpack needs).
Wooden Box	A box constructed of plywood. At the time of use in the 1970s, this box met DOT 19A packaging requirements. It comes in a range of sizes but generally is 7 x 4 ft and either 2 or 4-ft tall. The lid is either nailed or glued shut.
FRP Box	A box constructed in the same manner as the wooden box previously described and has the same range of dimensions. However, the exterior of the box is coated with at least 1/8 in. of fiberglass-reinforced polyester.
Cargo Container	Storage cargo container, 8’ x 8’ x 20’, has a body construction of 14 ft gauge steel or thicker and frames constructed from 8 ft gauge. Floors are made of wood or steel. Cargo containers have two sets of forklift pockets for lifting.
Interim Storage Container (ISC)	Lidded weatherproof concrete box with 4 vents and one drain that may be plugged. ISC may hold 4 drums (30- or 55-gallon). 55-gallon drums may be overpacked in 83- or 85-gallon overpacks if floor grating is removed. ISCs are designed for storage of remote handled (RH) mixed waste (MW) drums. Sizes of ISCs are 6 ft 8 in x 6 ft 8 in x 3ft 7 in or ~4 ft x ~4 ft x ~8 ft
HFEF-5 Canisters	Container system consists of an inner container and an outer container. The inner container is placed inside the outer container, which is seal-welded shut and placed in the RSWF liners for storage. The inner container, constructed of carbon steel, is the hot cell waste receptacle. It is a cylindrical, 14 gauge carbon-steel (AISI 1010-1020) container, 59.125-in. tall by 11.60-in. diameter. It is closed by a 3/8-in. thick lid fastened to a bolt ring in the top of the container by six cap-head bolts. The outer containers are the out-of-cell containers and are used to prevent the spread of contaminants from the inner container to the environment. It is a cylindrical, 14-gauge, Type-304 stainless-steel container, 73.5-in. long by 12.75-in. diameter.

Container Type	Description
SLSF Canisters	Container is constructed like the HFEF 5 Can assembly only it is larger in diameter. It is a cylindrical, 11-gauge Type-304 or-308 stainless-steel container, 20.76-in., diameter, by 122.00-in. long. It is closed by a 1.5-in. thick lid fastened to a bolt ring in the top of the container by six cap-head bolts. In addition to using the SLSF inner can, three 45-gal steel cans will also be used as the inner waste storage containers. The SLSF outer container is a cylindrical, 11 gauge carbon-steel (AISI 1010-1020) container, 22.25-in., diameter, by 134.5-in. tall. It is closed by a 1.5-in. thick lid that is seal-welded.
Process Components	Miscellaneous carbon or stainless-steel process components such as nuclide traps, cold traps, shipping vessels that are well suited for storage because they are compatible with the HW/MW and designed to withstand processing.
Bags	A bag typically constructed of 3 or 6 mil polyethylene, or some other durable material compatible with the waste. The bag must be made secure and leak tight (i.e., taped, j-sealed, or heat sealed). Bags may be used to store rigid waste (e.g., plywood, pallets, etc.) or non-rigid waste (e.g., personal protective equipment [PPE], radiological swipes, etc.) that does not contain Na, Nak or liquid. Bags may only be used for storing waste that without treatment, the waste is not amenable for storage in any of the containers identified above.

Storage of Containers at RSWF Staging/Storage Area and NFA. Wastes are received in drums, metal bins, casks, or other DOT approved shipping containers.

The primary storage containers are cargo containers and ISCs. Cargo containers are used for the storage of drums or containers containing non-liquid waste. The internal dimensions of a cargo container are 20-ft long x 8-ft wide x 8-ft tall for a total of 1280 ft^3. Double doors on either the side or on one end provide access into the cargo container.

The sides and top of each cargo container are constructed of 14-gauge steel or thicker steel. The floor is constructed of hardwood or steel over steel I-beams. The cargo containers are constructed to provide water tight protection for their contents when the doors are closed. The doors will be maintained closed except when access is necessary for inspection or other routine activities,

There is a total of 160 ft^2 of floor space available in each cargo container. The number of waste containers in a cargo container is dependent on the floor space

occupied by the waste containers. In addition, no stacking is allowed and adequate aisle space will be maintained in each cargo container to provide access for the weekly inspection of the waste containers. Attachment D-37 shows an illustration of cargo containers.

The ISCs are for the storage of RHMW. The ISCs are lidded waterproof concrete boxes that may vary in size depending on their inner containers. The ISC's may or may not be equipped with a container insert assembly depending upon the size of the container stored within the ISC. Attachment D-38 shows photographs of the ISCs. Attachment D-39 includes drawings of ISCs.

The RSWF staging/storage area can also receive Facility Transfer Containers (FTCs), casks and DOT type containers. The number of containers located within the fenced facility varies according to the volume of waste requiring storage and will not exceed the storage capacity listed in the Part A.

D-2(a) Containers With and Without Free Liquids

Containers with and without free liquids are managed in the same manner with the exception of providing secondary containment for containers with free liquids.

Containers stored at the RSWF staging/storage area and the NFA do not contain free liquids. The containers are elevated by design or will be elevated (except for ISCs) to protect from contact with accumulated liquid. ISCs are designed to sit on the ground and the waste containers within ISCs are elevated approximately 9-in above the floor of the ISC. Any waste drums within the ISCs will not come into contact with run-on liquids, as the ISCs are designed to be waterproof. Additionally the ISCs are kept closed to prevent accumulation of precipitation.

D-2(a)(1) Description of Containers [IDAPA 58.01.05.008; 40 CFR 264.171 and 264.172]

Examples of containers of HW/MW that are currently stored in HWMA units or are candidates for storage (they will be transferred from another on-Site facility) will be compatible with the waste stored and are summarized in Table D-1.

This listing is not inclusive but serves as a representative listing of the types of containers that may be received. Containers that are not in good condition (e.g., apparent structural failures or bulging), or whose contents are not compatible with the HW/MW they are storing, will not be accepted at HWMA units. HWMA units will only accept those containers that can be stored safely. In the event a container is not in good condition, it will be returned to the generator for repackaging or, if safe to do so, will be repackaged at an appropriate HWMA unit.

Containers are stored pending treatment at MFC or for transfer to an off-site facility for treatment or disposal. To confirm the structural integrity of containers while in storage visual inspections are performed as described in Attachment 6, Section F, Inspections. Container integrity is also verified prior to transfer between MFC HWMA units or prior to transfer to an off-site facility. In addition, the primary waste streams stored in the HWMA units for an extended duration (i.e., longer than 1 year) include Na/NaK, Na/NaK contaminated debris, and characteristic metal debris. The compatibility of these waste streams with respect to the construction material of the containers does not pose long term storage issues since the waste streams are Na/Nak including Na/NaK debris in nature. The Na/NaK and Na/NaK debris is from reactor components that were designed to handle Na/NaK at high temperatures. Long term storage of Na/NaK debris in metal containers and components is supported by various technical documents.[3]

Incompatible wastes, either solids or liquids, will be stored in accordance with the HW/MW separation precautions described in Attachment 6, Section F, Procedures to Prevent Hazards.

The number of each type of containers stored at RSWF staging/storage area and NFA will be variable, but will not exceed the maximum process design capacity as indicated in Attachment 1 of the Part A. Typically, the type of containers stored include cargo containers and ISCs. Additionally, containers such as metal boxes are stored. Any nonstandard waste packaging requires facility management approval prior to being stored at either RSWF staging/storage area or NFA. All nonstandard waste packaging approval will be documented in the facility operating record.

D-2(a)(2) Container Management Practices [IDAPA 58.01.05.008; 40 CFR 264.173]

Containers used to store HW/MW in HWMA units will be received, handled, managed and stored in a manner that reduces the likelihood of a HW/MW release as described in the following subsections.

D-2(a)(2)(a) Acceptance Criteria

Prior to the transfer of HW/MW to a HWMA unit, the HW/MW generator transferring the HW/MW must submit a completed IWTS Profile, or equivalent, and the HWMA Unit Waste Acceptance Checksheet, or equivalent, must be approved

[3] ANL-4417, Argonne National Laboratory Resistance of Materials to Attack by Liquid Metals, By Leroy R. Kelman, Walter D. Wilkinson, and Frank L. Yaggee, Dated July, 1950. Technical Information by DUPont Specialty Chemicals, Sodium Properties, Uses, Storage, and Handling, Dated September, 1994.

(ref. Attachment 2, Section C, Waste Analysis Plan). These forms are used to document details on the physical, chemical, and radiological characteristics of the HW/MW (which provides a detailed characterization of the HW/MW) to ensure it can be safely stored and processed with the existing HW/MW at an appropriate HWMA unit.

D-2(a)(2)(b) Labeling

Each container of HW/MW accepted at an HWMA unit is labeled with the labels (as applicable) shown in Table D-2. A photograph of the labels is shown in Attachment D-2.

Table D-2. HWMA Unit HW/MW Container Labels.

Label Type	Description
EPA Hazardous Waste Label	Identifies generator information and EPA identification and HWNs
MFC Barcode Label	Indicates the HW/MW container number that is included in the IWTS electronic database (or equivalent) and HW/MW inventory maintained by MFC
Indication of the hazard(s) of the contents	Identifies hazardous waste characteristics such as ignitable, corrosive, reactive, toxic.

D-2(a)(2)(c) Handling

HW/MW container handling practices will include the use of trained and qualified rigging and hoisting operators and trained material handling personnel for the placement or removal of HW/MW containers to/from HWMA units. All MFC hoisting and rigging activities (including periodic inspections, load testing, certification, and hoisting and rigging of critical items/loads) will be performed in accordance with the requirements identified in the DOE “Hoisting and Rigging Technical Standard,” DOE-STD-1090, the INL Lab Wide Procedure (LWP-6500) Hoisting and Rigging at the INL, and in facility-specific procedures.

Heavy equipment (i.e., forklifts and cranes) used for handling HW/MW containers in HWMA units are selected based on their unique ability to handle a particular size and type of HW/MW container. Typically, all large forklift-handled HW/MW containers will be placed on pallets to facilitate lifting and handling with a forklift without using additional hoisting and rigging tackle. However, in some cases, hoisting and rigging tackle (such as slings, wire rope, shackles, or drum-lifters) may be used. Forklifts and hoisting and rigging tackle used for handling HW/MW containers will be periodically inspected and load tested by qualified personnel.

D-2(a)(2)(d) Container Integrity

Before a HW/MW container is unloaded from the transporting equipment at a HWMA unit, HWMA unit facility personnel will inspect the container for damage, leaks, general appearance, markings, and labeling. A used, new, or reconditioned container will be accepted if HWMA unit facility personnel finds it to be sealed and in good condition (structurally sound, free of leaks). Upon acceptance, the HW/MW container will be placed in the appropriate HWMA unit storage area (see Attachment D-3 for hazardous waste acceptance checklists). Inspections are documented on the HWMA Unit HW/MW Daily Container Transfer Inspection Form (ref. Attachment 4, Section F, Inspections).

HW/MW movement between buildings within MFC is generally by flatbed semitrailers, truck, or forklift. Container loading and unloading operations are conducted as described in Attachment 6, Section F, Procedures to Prevent Hazards, Section F-4(a).

D-2(a)(2)(e) Waste Placement

In accordance with National Fire Protection Association (NFPA) 101, The Life Safety Code (LSC) for Industrial Occupancies and Occupational Safety and Health Standards (OSHA), a minimum of 3 ft of aisle space is maintained for any means of ingress or egress into a HWMA unit. Placement of containers within the facility in accordance with this minimum aisle spacing requirement ensures unobstructed movement of personnel, fire protection equipment, spill control equipment and decontamination equipment to any area of the facility operation in an emergency.

Adequate aisle space is also maintained around containers to facilitate inspections of the containers and the storage, verification, repackaging and/or treatment areas. Adequate space is maintained around all waste containers within a cargo container to allow for a complete inspection of waste containers.

As some HW/MW containers are irregular and nonuniform in size and shape, the number of HW/MW containers in an HWMA units storage area depends on the floor space occupied by the particular HW/MW containers and the secondary containment pallets or pans used (if storing liquids) to elevate containers of liquid HW/MW off the floor.

Container storage may involve stacking of containers of no more than two containers high. No stacking of containers with free liquids is allowed. Adequate aisle space will be maintained around containers to facilitate inspections of the

containers. Container stacking may be performed at HFEF (MFC-785), SCMS (MFC-793, MFC-793C and MFC-793G), and SSB (MFC-703).

Storage configuration is provided in Attachment 1, Section B, MFC Facility Description, Attachment B-5 for HFEF, Attachment B-10 for RSWF Staging/Storage Area, Attachment B-12 NFA, Attachment B-14 for SCMS, and Attachment B-17 for SSB.

D-2(a)(2)(f) Maintenance during Storage

After HW/MW containers are placed in a HWMA storage-only unit, they are not opened or handled except when it is necessary to add or remove waste in accordance with IDAPA 58.01.05.008, 40 CFR 264.173(a). In addition, because HW/MW containers are not routinely handled or moved after placement in storage, the likelihood of an accident resulting in container rupture is minimized.

D-2(a)(2)(g) HWMA Unit Decontamination/Cleaning Between Waste Containers

Following verification, repackaging, and/or container treatment in the WCC, all MW is removed from the HWMA unit where the activity is performed. Following removal of MW, decontamination and/or cleaning will be performed, if necessary. The decontamination and/or cleaning will be conducted consistent with the closure plan closure performance standards. Following this decontamination and/or cleaning future waste managed in the HWMA unit will only acquire the EPA HWNs assigned to the waste and the unit is considered to be free of all hazardous constituents in accordance with IDAPA 58.01.05.005; 40 CFR 261.

D-2(a)(2)(h) Inventory and Accountability

As described in Attachment 2, Section C, Waste Analysis Plan, the IWTS electronic database (or equivalent) is maintained by HWMA unit personnel and includes each HW/MW container received at a HWMA unit. A current inventory is maintained for each HWMA unit. For each HW/MW container, the database includes (but is not limited to) the following information:

— Container’s unique reference number

— Container’s location

— HW/MW description and hazardous constituents

— MW radionuclide composition

- Weight of the HW/MW
- Packaging
- Type of container
- Net and gross volume
- Gross weight
- Generating process
- Storage date.

D-2(a)(2)(i) Container Treatment

HWMA unit personnel conducting container treatment processes are trained and follow established procedures and/or guidelines for each treatment technique. This information will be provided in the WAP or in a HWMA unit-specific procedure. Treatments that may be conducted include absorption, neutralization and/or solidification/stabilization.

The primary neutralizing agents used include nitric acid or sodium hydroxide. The objective is to adjust the pH of the free liquid to a neutral pH. Solidification and stabilization agents used may include Aquaset-II-H and Aquaset II-G. These agents may also be used as a blend. The objective of solidification and stabilization would be to stabilize the material to meet UTS standards. The manufacturer information for these agents is found in Attachment D-4.

These container treatments will enable certain HW/MW to meet HWMA/RCRA UTS and WAC regarding pH, free liquids, and toxic metals. The HW/MW to be treated may contain both solids and liquids; therefore, different treatments will be selected accordingly. The general process is described below.

Container treatment procedures or WAPs will be developed, as required, and used based on bench scale testing results and/or information provided from commercial treatment agent vendors. The HWMA unit-specific treatment procedure will specify treatment process steps such as the amount of treatment agent(s) to be added, required pH, rate and order of HW/MW and treatment agent addition, rate and time of mixing, curing time (if appropriate), temperature control (if appropriate), and any other information important to proper treatment process control or desired outcome.

HWMA unit personnel will conduct the container treatments in accordance with the established treatment procedure or WAP. Container treatment procedures may be performed on the original container unless the original container integrity will not meet the WAC. In this case, the HW/MW will be transferred to a new container. Container size selected will depend on the volume of HW/MW and treatment agents to be added. The selected container will also be compatible with the HW/MW and treatment materials.

Upon treatment completion, treatment effectiveness will be determined in accordance with generator specifications and/or WAPs.

Following treatment, the HWMA unit where the container treatment was performed will be cleaned and inspected if required by facility-specific procedures.

The treatment will be documented in the HWMA unit operating record and may include the following information:

- Original container content code
- Container identification number
- Date of treatment
- Treatment conducted (absorption, neutralization, solidification)
- Treatment procedure or WAP used
- Type and amounts of treatment agents used
- Results of the treatment conducted (pH tests/visual verifications/free liquid test)
- Any additional comments by HWMA unit personnel.

This information will be used to update the applicable database regarding a specific HW/MW container. HW/MW characteristic information on a HW/MW container will be updated to ensure tracking of the initial HW/MW container and account for the final outcome of the container contents.

As an example, information on the free liquid absorption process is presented as follows:

Absorption (free liquids). In order to meet a WAC for free liquid, absorbents will be added to absorb the free liquid. The container treatment procedural steps that will be used during the absorption/treatment process are as follows:

— The volume of free liquid to be absorbed will be determined and recorded.

— Adjustment of pH will be performed (if necessary).

— Required amounts of absorption agents will be added in accordance with the treatment procedure.

— The absorbent will be added to the free liquids and mixed in accordance with the method specified in the treatment procedure.

— Treated HW/MW will be visually inspected for signs of free liquids. If no free liquids are present, the treatment will be considered successful. If liquids are present, additional absorbent material will be added and the HW/MW will be remixed in accordance with procedural steps.

The type(s) of absorbent used will vary with the type of liquid and will be selected based on:

— Recommended usage and specifications provided by manufacturers

— Results of bench-scale testing

— Compatibility with the HW/MW

— Assurance that no unstable or reactive compositions will be created as a result of the absorbent used.

Compatibility constraints of commercially available absorbents will be observed with the material being treated. No absorbents containing cellulose material will be used. Absorbents may include diatomaceous earth, Aquaset, Petroset, and Super Absorption Polymer (SAP). The manufacturer information for these absorbents is found in Attachment D-4.

D-2(a)(2)(j) Container Management during Verification, Repackaging, and/or Container Treatment

Standardized maintenance and housekeeping operations will be conducted for the HWMA units where container verification, repackaging, and/or container treatment is performed. Startup, operation, and maintenance of commercially available items will comply with the manufacturer's instructions and recommended practices.

Before conducting container verification, repackaging, and/or container treatment activities, there will be checks of the HWMA unit to ensure emergency equipment as identified on the applicable inspection form(s) is available.

D-2(a)(2)(k) Operating Procedures

This section provides a list and brief description of relevant operating procedures used to prevent any releases to the environment from waste handling and container management.

HFEF-OI-6601 (Waste, Equipment, and Scrap Handling at HFEF) provides instructions to establish and implement requirements for handling waste, equipment, and scrap at HFEF. Requirements encompass identification, segregation, characterization, packaging, and documentation of the various waste streams, equipment, and scrap to provide a means for proper disposal or storage.

HFEF-OI-6801 [Hazardous Waste/Mixed Waste (HW/MW) Requirements] specifies requirements for the evaluation and acceptance, receipt, and inspection of hazardous waste and mixed waste at the HFEF.

SCMS-OI-1 (Facility Information and Administrative Requirements) provides a description of the SCMS (including secondary containment, ventilation systems, fire detection and suppression systems and equipment) and scope of shop operations and uses. It also addresses administrative and environmental-safety-and-health requirements applicable to the facility such as requirements for all waste activities in which alkali metals (typically Na and NaK) are being handled or transferred.

SCMS-OI-6 (Materials Characterization, Segregation, and/or Repackaging in the SCMS Enclosure) provides instructions and requirements for characterizing, sizing, segregating, and repackaging radioactively-contaminated equipment and waste in the SCMS enclosure in preparation for treatment, disposal, or continued storage. Waste types include radioactive waste, sodium-bearing waste, non-radioactively-contaminated items, and mixed waste.

SCMS-OI-7 (Water Wash Vessel) provides instructions for operating the water-wash vessel which is used to treat alkali metal bearing wastes using water. This procedure also covers the transfer of liquids to the scrubber tank from drums and containers, and the transfer of liquids from the scrubber tank into drums for additional treatment.

SD-38.1.1 [Treatment, Storage, and Disposal Facility (TSDF) Environmental Compliance] identifies each TSD facility, the applicable environmental requirements for each TSD facility, the method of implementation for each environmental requirement, and the personnel responsible for implementation of the requirements and maintaining the associated operating records. It also identifies all applicable inspection log sheets and describes how inspections, deficiencies, and corrective actions are tracked.

TSD-OI-003 (Drum, Box, ISC Handling, or cargo containers) specifies generic drum or box handling requirements at Treatment, Storage, and Disposal (TSD) facilities. The procedure provides instructions for performing different handling functions associated with 5 to 110 gallon drums and boxes of various sizes, and the loading/handling of interim storage containers (ISCs) and cargo containers.

TSD-OI-004 (Waste and Material Acceptance for Storage/Treatment and Radioactive Inventory Control) specifies requirements and provides instructions for accepting hazardous waste, mixed waste, and radioactive waste and material from MFC and non-MFC generators at the SCMS, SSB. RSWF staging/storage area and NFA. Specifically, this procedure defines the acceptance criteria for the facilities to ensure that waste or material accepted can be managed in a manner which complies with the operating requirements of the facility and environmental regulations.

D-2(a)(3) Secondary Containment System Design and Operation [IDAPA 58.01.05.012 and 58.01.05.008; 40 CFR 270.15(a)(1) and 264.175(a)]

Secondary containment for containers with free-liquids may consist of a portable secondary containment device such as spill pallets, fabricated spill pans, or an overpack depending on the type, size, and configuration of the “free-liquid” container. A SWB may also provide secondary containment. Attachment D-5 provides photographs and example drawings of devices that can be used to provide secondary containment.

Secondary containment may also be provided by seal-welded (lined) or epoxy-coated concrete floors. Two HWMA units (HFEF and SCMS) have lined floors or epoxy-coated floors that provide an impermeable surface and a method to

collect spills of leaks. Seal-welded floors are maintained as secondary containment in HFEF (except in the HBA and HRA) and epoxy-coated floors are maintained as secondary containment at SCMS in the High Bay and Low Bay pit (see floor plan schematics in Attachment 1, Section B, MFC Facility Description).

Both portable and fixed secondary containment devices and floors are designed to have sufficient capacity to contain 10% of the total volume of containers stored within/on the secondary containment, or 100% of the volume of the largest container within its boundary, whichever is greater.

At RSWF staging/storage area and NFA secondary containment is not required, since no free liquids will be stored.

Descriptions of secondary containment design, drainage, capacity, run-on, and free-liquid removable specifications for the pallets, pans, and overpacks are provided in the following subsections.

D-2(a)(3)(a) Requirements for the Base or Liner to Contain Liquids [IDAPA 58.01.05.008; 40 CFR 264.175(b)(1)]

Portable Secondary Containment Devices. Spill pallets, pans, and overpacks/boxes, will be used in container areas when the floors in the area do not serve as secondary containment. These devices are constructed of materials that are compatible with the ignitable, reactive, corrosive, toxic metal, and/or listed HW/MW that will be stored in/on the containment system to contain any spilled or leaking free liquids. The materials used in the construction of the secondary containment systems and dimensions, volumes, and capacities are as follows:

Portable Spill Pallets. Typically, portable spill pallets are constructed of translucent high-density polyethylene, which is compatible with a wide variety of HW/MW. The pallets have a support structure and a support grate used to elevate the containers off the base to prevent contact between the container and spilled or leaking HW/MW. The grate allows for visual detection of accumulated liquids during inspections.

Fabricated Spill Pans. Fabricated spill pans are typically constructed of steel. All of the seams will be welded in accordance with approved procedures. The welds will be visually inspected to ensure that the welds are free of cracks and holes. All containers stored in the spill pans will be elevated off the base of the pan to prevent contact between the container and spilled or leaking HW/MW. The spill pans may be designed to have a platform used to support the container and elevate the

containers off the base. The platform will be grated to allow for visual detection of accumulated liquids during inspections.

Fabricated Overpacks. Typically, fabricated overpacks are constructed of steel, with continuous welds on the inside. All of the seams will be welded in accordance with approved INL procedures. The welds will be visually inspected to ensure that the welds are free of cracks and holes. The overpacks have cylindrical openings. The overpacks that are currently in use have an annulus filled with lead shot to provide shielding, if necessary. Containers within the overpacks may be elevated off the base.

Fixed Secondary Containment Floors. Lined rooms or storage areas with epoxy-coated floors are located in HFEF and SCMS. The floors in these HWMA units are described below.

HFEF. The HFEF preparation room (PR) and transfer room (TR) are surrounded by a 2-in. tall, 1/8 -in. thick steel curb. A 42-in. high stainless-steel wainscot is installed on the walls and over the curb of the PR/TR. The floor is covered with 3/8-in. thick sheets of steel. The floor and curb/wainscot are seal-welded at the seams and edges to form secondary containment. The 2-in. curb is maintained at the thresholds of the exterior doors. See Attachment D-6 for drawings that detail the PR/TR secondary containment.

The HFEF PR has a drain that is plugged and has a positive shutoff via a valve to maintain secondary containment. The valve is always closed and the drain is plugged whenever there is HW/MW in the room.

The spray chamber is a 7.75 x 9.5 ft and 12 ft high sealed stainless-steel chamber in the decontamination cell. The chamber was originally constructed for use in decontaminating equipment with low-pressure water spray and is provided with an impermeable lining around the base to a height of 22.5 in. The spray chamber was constructed to retain the water used in decontamination, which drains from the chamber through a floor drain to a holding tank. The drain (used in routine spray chamber operations) in the spray chamber floor is blocked off with a drain cover during MW verification, repackaging, and/or treatment operations to provide secondary containment. The drain cover forms a seal with the spray chamber floor and replaces the drain-pad screen basket.

Hinged doors on the east wall of the spray chamber provide a 6 x 12-ft opening into the spray chamber. Each door is opened with an air-operated cylinder and is fitted with a rubber gasket to seal water inside the spray chamber. A series of six air-operated toggle clamps compress the door gaskets and prevent leakage. The spray chamber doors are kept closed during drum unloading and HW/MW verification and are opened only during transfers of drums and bins between the spray chamber and decontamination cell.

As HW/MW is removed from the container, it is either placed onto a stainless-steel examination table (66 x 50 in. with a 2-in. lip) or into a 24 x 18 x 15-in lidded steel auxiliary collection bin.

HW/MW items are not allowed to be left out overnight and must be placed:

— In one of the two collection bins with the lid installed

— Back into the original container

— Into the SWB.

The spray chamber floor cover is a 5-in., diameter, by 2-in. thick steel plate with an attached bale handle and an affixed neoprene gasket. When in place, it forms a tight seal against the drain access lip. The spray chamber is a sealed enclosure that provides internal secondary containment for the HW/MW. See Attachment D-6 for drawings that detail the spray chamber secondary containment.

SCMS. The secondary containment features of the floors in SCMS are described in Subsection D-4, Tank Systems.

D-2(a)(3)(b) Containment System Drainage [IDAPA 58.01.05.012 and 58.01.05.008; 40 CFR 270.15(a)(2) and 264.175(b)(2)]

HW/MW containers are stored inside the buildings containing HWMA units (with the exception of RSWF, RSWF staging/storage area, and NFA) and, therefore, do not accumulate liquid from precipitation. Containers with free liquids are elevated within secondary containment. Note: containers may be staged directly on the floor to safely facilitate processing. HWMA unit personnel will be present during these operations.

Containers stored at RSWF staging/storage area and NFA do not contain free liquids. The storage areas are elevated above the adjacent soil. The areas are graded and a snow removal maintenance plan is in place.

D-2(a)(3)(c) Containment System Capacity [IDAPA 58.01.05.012 and 58.01.05.008; 40 CFR 270.15(a)(3) and 264.175(b)(3)]

Portable Spill Pallets. Portable spill pallets used in HWMA units will be designed/selected to ensure that they contain 10% of the total volume of containers stored on them or 100% of the volume of the largest container, whichever is greater. Several types of spill pallets may be used in HWMA units. An example of a spill pallet that is currently used in HWMA units for 55-gal drums is a four-drum spill skid that has an 8000 lb load capacity. The exterior dimensions of the spill pallet are 51.5 x 51.5 in. and 10 in. tall. The interior dimensions at the bottom are 47 x 47 in. and 49.5 x 49.5 in. at the top. The bottom of each pallet is created to allow forklift access. The deck is 3/4 in. thick. The manufacturer specifications indicate that the pallet has 62 gal sump capacity.

These pallets are used to store 55-gal drums. No more than four 55-gal drums will be placed on the pallet at any one time. Therefore, the 62 gal sump capacity will contain either 10% of the total estimated volume of four 55-gal drums (22 gal) or 100% of the volume of the largest container (55 gal).

Fabricated Spill Pans. Fabricated spill pans used in HWMA units will be designed to ensure that they contain 10% of the total volume of containers stored in the pan or 100% of the volume of the largest container, whichever is greater. Containers will be elevated above the pan base with appropriate structures made of compatible materials.

An example of the interior dimensions of a spill pan are 90 x 216 in. and 4 in. tall. Ten percent (10%) of the volume is reserved for displacement by pallets. The capacity of the spill pan is calculated as shown in Table D-3.

Table D-3. Secondary Containment Capacity of Fabricated Spill Pan.

Secondary Containment	Dimensions
Interior dimensions of spill pan	90 × 216 × 4 in. (tall)
Containment volume of spill pan	(90 in)(216 in)(4 in)(1 gal/231 in^3) = 336 gal
Volume displaced (by pallet)	0.10 × 336 gal= 33.6 gal
Available capacity of spill pan	336 gal - 33.6 gal = 302.4 gal

This fabricated spill pan would have sufficient capacity to provide secondary containment of containers with a total volume of 302.4 gal (90% of 33.60 gal) or a single container holding a waste volume of up to 302 gal.

Fabricated Overpacks. Fabricated overpacks that may be used in HWMA units during the solidification process (for a 55-gal drum) are designed to ensure that they contain 100% of the volume of the container for which they provide secondary containment. Below is an example of dimensions and capacity of an overpack.

SWB. SWBs may also be used as secondary containment vessels. The capacity of an SWB when used as secondary containment vessel is 570 gal. Typically, the SWBs will be loaded within ten (10) days of transfer out of a HWMA unit. When used as a secondary containment vessel, the SWBs will be limited to containment of less than the volume of the SWB. Operation protocol at the HWMA units enables removing any free liquids resulting from leaks and spills.

For long-term storage, the SWB will be equipped with an interior support structure of sufficient height to allow for container elevation above the volume of a spill of 100% of the contents of the largest container plus the volume of liquid displaced by the interior grating or support structure. The capacity of an SWB when used as a secondary containment vessel is calculated as shown in Table D-4.

Table D-4. Secondary Containment Capacity of SWB.

Containment	Capacity
Total SWB volume	570 gal
SWB internal height	36.7 in.
SWB gal per inch of floor space	570 gal/36.7 in. = 15.5 gal/in.
Capacity of the largest stored container	55 gal
Estimated volume of liquid displaced by support structure	20%

Based on the information in Table D-4, the minimum height of the support structure is 4.3 in., as calculated below:

- 55 gal/15.5 gal/in. + 0.2 (55 gal/15.5 gal/in.) = 4.3 in.

To accommodate for a margin of error, a support structure will be used in the bottom of the SWB.

D-2(a)(3)(d) Control of Run-On [IDAPA 58.01.05.012 and 58.01.05.008; 40 CFR 270.15(a)(4) and 264.175(b)(4)]

The likelihood of run-on into the secondary containment pallets, pans, and overpacks used for containment of HW/MW in HWMA units is controlled by elevation. The topography of the area where the HWMA units are located is high relative to its surroundings and drains away from the facility (Attachment 1, Section B, MFC Facility Description). Additional elevation above ground level is provided by the secondary containment platforms and/or supports. Elevation and secondary containment measures will effectively ensure all HW/MW containers are kept from contact with standing liquids.

In addition, cargo containers stored at the RSWF staging/storage area and NFA are elevated by container design, which prevents the accumulation of precipitation. The doors are kept closed except when necessary for inspections or other routine activities.

The ISCs are designed to sit on the ground and the waste containers within ISCs are elevated approximately 9-in above the floor of the ISC. Any waste drums within the ISCs will not come into contact with run-on liquids, as the ISCs are designed to be waterproof. Additionally the ISCs are kept closed to prevent accumulation of precipitation. If pooling/puddling is identified around container(s), container(s) will be relocated.

The RSWF staging/storage area and NFA storage areas are elevated above the adjacent soil, the soil is graded at a downward slope away from the pads to provide drainage, and a snow removal maintenance plan is in place.

D-2(a)(3)(e) Removal of Liquids from Containment Systems [IDAPA 58.01.05.012 and 58.01.05.008; 40 CFR 270.15(a)(5) and 264.175(b)(5)]

Several measures will ensure that the secondary containment pallets, pans, and overpacks will not overflow because of spills, leaks, or accumulation of precipitation. The capacity of the pallets, pans, and overpacks will be sufficient to contain 10% of the volume of the containers within their boundary (if there are more than one) or 100% of the volume of the largest container, whichever is greater. The accumulation of run-on and precipitation in the secondary containment pans is prevented because of their physical location in the enclosed HWMA unit's storage areas.

In the unlikely event that liquids accumulate in the secondary containment pans, they can be identified during the daily and weekly inspections.

For example, in SCMS, because of the potential for corrosive liquids spills or leaks and because water reacts with the ignitable and reactive HW/MW that will typically be stored in HWMA units (Na and sodium-potassium alloy [NaK], which form sodium hydroxide [NaOH] and potassium hydroxide [KOH], respectively), pH measurements will be used to determine if the water is chemically contaminated. If the pH is determined to be < 2 or >12.5, it will be neutralized. Any spill materials will be packaged in drums and stored at HWMA units until further disposition.

A containment system designed to contain liquids is not required at RSWF staging/storage area and NFA, since no free liquids are allowed to be stored.

D-2(a)(4) Test for Free Liquids [IDAPA 58.01.05.012; 40 CFR 270.15(b)(1)]

The presence or absence of free liquids in the HW/MW stored/to be stored in the HWMA units may be documented on an IWTS Profile or equivalent (ref. Attachment 2, Section C, Waste Analysis Plan). Certification will be made through analysis of the HW/MW or process knowledge and will be required by the HWMA unit's personnel prior to HW/MW acceptance.

D-2(a)(5) Container (without free liquid) Storage Drainage [IDAPA 58.01.05.012 and 58.01.05.008; 40 CFR 270.15(b)(2) and 264.175(c)]

HW/MW containers are stored inside buildings containing the HWMA units (with the exception of RSWF, RSWF staging/storage area, and NFA), and, therefore, do not accumulate liquid from precipitation. Containers without free liquids are elevated. Note: containers may be staged directly on the floor to safely facilitate processing. HWMA unit personnel will be present during these operations.

Containers stored at RSWF staging/storage area and NFA do not contain free liquids. The RSWF staging/storage area and NFA ensure containers do not come in contact with run-on from precipitation by containers being elevated or by the areas being sloped to drain and remove liquid resulting from precipitation. Attachment D-40 shows the topography of the storage areas. Containers are elevated by design or will be elevated (except for ISCs) to protect from contact with accumulated liquid. The ISCs are designed to sit on the ground and the waste containers within ISCs are elevated approximately 9-in above the floor of the ISC. Any waste drums within the ISCs will not come into contact with run-on liquids, as the ISCs are designed to be waterproof. Additionally the ISCs are kept closed to prevent accumulation of

precipitation. If pooling/puddling is identified around container(s), container(s) will be relocated.

D-3 Basic Treatment System Description

This subsection provides basic system descriptions for HW/MW container and/or tank treatment systems (fixed in-place components) used to perform routine treatment processes. One of MFC's HWMA units has a fixed container and/or tank treatment system—SCMS. The treatment system for SCMS is discussed in Subsection D-3(a), SCMS Treatment System Descriptions.

D-3(a) SCMS Treatment System Descriptions

A floor diagram showing the location of each of the treatment systems within SCMS is provided in Attachment 1, Section B, MFC Facility Description, Attachment B-14. A process flow diagram, piping and instrumentation diagrams (P&IDs) for each system, and photographs and drawings of the systems components, are provided in the specified attachment(s) as shown in Table D-5.

Table D-5. Basic System Descriptions.

System	Permit Application Attachment(s)	
	Process and Instrumentation Diagrams	Photos/Drawings
SCMS Process Flow Diagram	D-7	–
Standard Process and Instrumentation Symbols	D-8	–
Piping and Instrumentation Diagram	D-9	–
Water Wash System	D-9	D-10 though D-16
Scrubber Water System	D-9	D-17 through D-20
Carbonation System	D-9	D-21 and D-22
Solidification System	D-9	D-23
Ventilation System	D-9	–
Service Water System	D-9	–
Carbon Dioxide System	D-9	–
Steam and Condensate System	D-9	–
Compressed Air System	D-9	–
Nitrogen System	D-9	–
Argon System	D-9	–

D-3(a)(1) Water Wash System

Ignitable and reactive characteristics of the HW/MW (typically Na and NaK) are deactivated in the water wash system. The water wash system is designed to perform the following deactivation processes:

— Deactivation of bulk ignitable and reactive HW/MW placed inside the water wash vessel (WWV) and or liquid HW/MW transferred to the WWV from the melt/drain and transfer feed container (Na and NaK)

— Deactivation of residual ignitable and reactive HW/MW remaining in closed containers that have been drained or emptied

— Deactivation of residual ignitable and reactive HW/MW contained in or remaining on debris, components, piping, open tanks, or other types of debris

— Deactivation of HW/MW accumulated from miscellaneous containers on-Site

— Aggregate HW/MW from multiple containers or tanks.

Process. In the WWV, the ignitable and reactive characteristics of HW/MW are deactivated in a controlled process (via water reaction/water washing) where the ignitable and reactive HW/MW reacts with air and water, ultimately forming a hydroxide solution (OH) by the following reaction (as shown for Na):

- Direct Water Reaction

$$Na + H_2O \rightarrow NaOH + 1/2H_2$$

- Direct Air Reaction

$$2Na + 1/2O_2 \rightarrow Na_2O$$

The hydroxide solution produced from the direct reaction with water drains into the scrubber water tank. Airborne reaction products from the water reaction are advanced through the water wash scrubber via a 3000 cfm air flow where the airborne particles combine with water droplets to form a hydroxide solution by the following reaction (as shown for Na):

- $Na_2O + H_2O \rightarrow 2NaOH$

The water wash system basically consists of a WWV and a ventilation system. The WWV contains the ignitable and reactive HW/MW water, and ignitable and reactive waste-air reactions and resulting hydrogen-air reaction. The WWV protects personnel from these reactions and from heat; corrosive, ignitable, and reactive HW/MW burns; and radioactive contamination. The ventilation system consists of a venturi scrubber with a liquid separator, moisture separator, air heater, two banks of high efficiency particulate air (HEPA) filters, exhaust fan, and direct-to-atmosphere vent. The exhaust fan draws an air flow of 3000 cfm through the WWV, diluting the gaseous vapor reaction products.

The aqueous solutions generated from bulk, residual, and debris treatment operations are drained to the scrubber water tank by gravity flow through a 2-in. drain line from the center of the bottom head.

Airborne reaction products from deactivation of ignitable and reactive HW/MWs are drawn from the WWV through the venturi scrubber, moisture separator, and HEPA filters before being released to the SCMS exhaust stack. A direct-to-atmosphere vent line from the WWV is incorporated as an alternative for venting hydrogen in the event the exhaust fan fails during operation. The height of this atmospheric vent and numerous bends within the exhaust system minimize the possibility of HW/MW release. The water wash system is not allowed to operate when this backup system is in operation; treatment is secured immediately. In the event this vent is opened, operators will be notified by (1) an audible alarm that sounds on the SCMS control panel, (2) the very loud operation of the air-operated valves, and (3) an indication of normal exhaust differential pressure/flow changes.

Water is injected into the air stream through spray nozzles upstream of the venturi scrubber. The scrubbing action takes place as the water is sprayed into the air stream as it is accelerated through a venturi. The water containing the dissolved particulate/vapor is then removed by the downsteam liquid separator contained in the water wash scrubber.

Air and liquid flow through the flooded elbow into the bottom of the separator. The air and liquid mix passes into a cyclonic-entrainment separator that exerts centrifugal and gravitational forces to separate the liquid and air. The liquid flows out of the separator through the bottom drain, and the scrubbed air flows up through the water wash scrubber.

The moisture separator and air heater are installed downstream of the scrubber to reduce moisture condensation in the HEPA filters. They are both installed in the same housing. The heater is designed to raise the temperature of 3000 cfm of air a minimum of 10°F. Increasing the air temperature raises the dew point; thereby, reducing condensation in the HEPA filters.

There are two banks of HEPA filters downstream of the air heater to serve as final collection for smoke and airborne particulate contamination. The HEPA filters will remove particulates with a 99.97% efficiency for particle sizes 0.3 microns or larger.

The two banks of filters are arranged in parallel, with manually-operated isolation dampers upstream and downstream of each bank. Only one filter bank will be in operation at a time. The other bank will be in standby for use if the operating filter plugs up or fails. Switching to the standby filter bank will normally be done when the filter differential pressure exceeds the operating limit of 5 in. H_2O.

The water wash system exhaust fan is located outside of the SCMS, at ground level, on the south side of the SCMS Low Bay. The exhaust fan is rated to deliver 3000 cfm at this altitude.

The WWV has automatic dampers to isolate it from the normal ventilation system, and to open a vent to the atmosphere outside the building if the fan fails during operation. If ventilation flow is stopped because of fan failure or plugging of HEPA filters, a pitot-static tube in the fan discharge provides a signal to the pressure switch. The pressure switch will deenergize solenoid valves in the air lines to their respective dampers, the normal inlet and outlet dampers will close, and the emergency vent damper will open.

Venturi Scrubber and Liquid Separator. The venturi scrubber is used to remove reaction product smoke and other particulates from the ventilation air stream. It is designed to remove the smoke resulting from burning 50 lb/hr sodium in air, assuming that all the burned sodium results in smoke and is in the form of sodium monoxide (Na_2O). The scrubber is specified to have an efficiency of 97% for a particle size of 0.37 micron, regardless of composition. A drawing of the venturi scrubber is provided in Attachment D-14.

The venturi and separator are constructed of Type-304 stainless steel for resistance to corrosion by the hydroxide solution.

Instrumentation on the scrubber includes a locally-reading thermometer on the air outlet line and differential pressure sensor across the filter. The differential pressure indicator is mounted on the water wash ventilation gauge panel on the wall south of the instrumentation and control (I&C) panel. The I&C panel is located west of the scrubber.

Moisture Separator. The moisture separator is constructed of stainless steel and contains a knitted pad of stainless-steel mesh, about 2 ft^2 x 4-in. thick. It is capable of removing 99.9% of the entrained moisture when operating under conditions recommended by the manufacturer. The moisture that collects in the pad agglomerates into larger droplets and drains by gravity through the vent line back to the liquid separator. A drawing of the moisture separator is provided in Attachment D-15.

The air heater consists of a Type 316 stainless-steel, finned-tube assembly, heated by steam from the building steam system.

There are locally indicating thermometers at the inlet (D11-TI-111) and outlet (D11-T1-114) of the heater to monitor the air temperature rise.

HEPA Filters. Each filter bank contains four filters; each filter is 2 ft^2 x 1-ft. deep. The filter banks are contained in "bagout" housings that are designed so that the filters may be removed into plastic bags without exposure to the atmosphere. Drawings of the HEPA filter process ventilation system are provided Attachment D-16.

Instrumentation for the filters includes differential pressure indication and high differential pressure alarms across each bank of filters. The indicators are located on the water wash ventilation gauge panel and the alarms activate the "Water Wash System Abnormal" alarm on the SCMS High Bay I&C panel.

Exhaust Fan. The fan is a single-suction, squirrel-cage blower, constructed of carbon steel. It is driven by a 50 HP, 480 V, 3 phase, totally-enclosed motor. Discharge from the fan is routed to the SCMS building ventilation exhaust stack, where it joins the 10,000 cfm exhaust flow from the SCMS High Bay Area.

D-3(a)(2) Scrubber Water System

The scrubber water system receives aqueous liquid solutions from HW/MW treatment operations performed in the water wash system and/or aqueous carbonate solutions from the deactivation of corrosive HW/MW in the carbonation system.

The scrubber water system supplies or transfers solutions to the following:

- The venturi scrubber for the removal of airborne reaction products resulting from the deactivation of ignitable and reactive HW/MW in the water wash system
- The WWV for treatment of container residuals and debris treatment operations in the WWV
- The carbonation vessel for deactivation of the hydroxide solutions and conversion to their carbonate form
- The solidification system for solidification/stabilization prior to disposal
- To drums for off-site disposal.

Process. During HW/MW treatment operations performed in the water wash system, all the solutions that drain from the WWV and from the venturi scrubber go directly to the scrubber water tank. The scrubber pumps take suction from the tank and supply the solution back to the venturi scrubber or to the WWV for residual deactivation operations. Recirculating the scrubber water tank solution reduces the amount of liquid requiring further treatment by reducing the makeup water requirements and by evaporating water and concentrating the solution.

The scrubber tank solution can be recirculated until a maximum equivalent hydroxide concentration of 15 wt% is reached.

The equivalent hydroxide concentration in the scrubber water is measured continuously when the system is in operation. The readout for the meter is a digital volt meter, calibrated in % NaOH, located on the SCMS High Bay I&C panel.

The scrubber water tank sampler is installed above the SCMS Low Bay Pit grating in a stainless-steel enclosure. The scrubber water sampler provides a hard piped means of sampling the scrubber water directly, with a minimal potential for leakage or spills.

In addition, the scrubber water tank can be pumped from the tank through a ½-inch stainless steel transfer line into collection drums for off-site disposal (ref. Attachment D-9). The transfer line is gravity drained back to the scrubber water tank and is maintained empty.

D-3(a)(3) Carbonation System

The corrosive characteristics of HW/MW that require deactivation (pH ≤2 or ≥12.5) following and/or prior to additional treatment processes include:

— Hydroxide solutions produced in the SCMS water wash system

— Containerized liquid corrosive HW/MW received at SCMS.

These corrosive solutions or liquids can be deactivated by carbonating the hydroxide solution with CO_2 in the SCMS carbonation system or by neutralizing the hydroxide solution or corrosive liquids with nitric acid. Carbonation or neutralization will be performed to within an acceptable pH range (2 < pH < 12.5) to deactivate the corrosive characteristic and/or to obtain the optimum pH for subsequent solidification/stabilization of the carbonated/neutralized solutions. The manufacturer information for the agents used is found in Attachment D-4.

Process. The carbonation system utilizes some components of the scrubber water system to supply solutions to the carbonation vessel.

Deactivation of ignitable and reactive HW/MW in the water wash system generates hydroxide solutions that drain to the scrubber water tank. This hydroxide solution is then recirculated and used in the water wash system until a maximum 15 wt% hydroxide concentration is attained. The carbonation of the hydroxide solution begins by transferring the solution from the scrubber water tank to the carbonation vessel using the scrubber pump(s).

The hydroxide solution in the scrubber water tank is recirculated through the bottom of the carbonation vessel at a rate of approximately 1 gpm, where it is contacted with finely divided gaseous CO_2, introduced through a sintered metal sparge element of 10 μm porosity. The CO_2 reacts with the hydroxide solution by the following reaction:

- $2NaOH + CO_2 \rightarrow Na_2CO_3 + H_2O$

The recirculated solution gravity drains from the carbonation vessel back to the scrubber water tank. A combination of the mass of CO_2 delivered and the carbonation vessel pressure and temperature provides an indication of hydroxide to carbonate conversion completion. Sampling and analysis from the scrubber water tank confirms the conversion of hydroxide solution to a carbonate solution of pH > 2 and < 12.5.

In addition to the carbonation system, neutralization can be used for deactivating the corrosive liquids generated in the WWV. Corrosive liquids are neutralized by adding a precalculated amount of acid or base (i.e., nitric acid or sodium hydroxide) as a neutralizing agent. The amount of neutralizing agent will be based on the pH of the corrosive material and desired final pH.

D-3(a)(4) Solidification System

Solutions or liquids that may require solidification or stabilization prior to disposal can be solidified or stabilized in the SCMS solidification system (typically in, but not limited to, 55-gal drums). Solidification or stabilization of the solutions will be performed, as necessary, to meet UTS and/or disposal facility WAC criteria (free liquid tests).

Solutions or liquids that may require solidification or stabilization include:

— Non-HWMA/RCRA solutions resulting from the deactivation of ignitable, reactive, and/or corrosive HW/MW

— Toxic metal-contaminated HW/MW.

The solidification or stabilization procedure, and the type and amount of solidification or stabilization agent used, is based on the analysis of a representative sample of the non-HWMA/RCRA waste or toxic metal-contaminated HW/MW solution taken prior to the solidification or stabilization treatment process and one of the following:

— An approved WAP and a treatment procedure for a specific HW/MW stream

— Recommended usage and specifications provided by agent manufacturers based on bench-scale testing for a particular HW/MW stream.

Solidification and stabilization agents may include natural materials such as vermiculite, silicates, clays, or synthetic materials such as absorbent polymers. Examples of agents used include Aquaset II-G and Aquaset II-H. The manufacturer information is found in Attachment D-4.

Solidification Station. The solidification station is used to treat prefilled containers or accommodate transfer operations to place materials within new containers for treatment. The station consists of an enclosure (glovebox), a variable speed/position mixer, and a hydraulic lift platform. Containers requiring treatment are placed within a shielded overpack (ref. example provided in Attachment D-24) and raised into position under the mixer. The mixer is operated and the solidification/stabilization agent is added. The container is inspected for free liquid and, if required, a sample is taken. The treated container is then removed from the solidification station (ref. Attachment D-23).

Process. The solidification station can receive liquids from the following sources:

— Scrubber water tank

— Demineralized water line

— External transfer line

— CO_2 system.

The solidification station also has additional lines that can be adapted for use in other HW/MW transfer operations. Containers requiring treatment are placed within a shielded overpack and raised into position under the mixer by the hydraulic lift platform. The containers are then connected to the solidification station using a bag-in sleeve system. The mixer is operated at varying speeds and elevations within the container using a disposable blade apparatus. Waste, liquids, treatment chemicals, and solidification/stabilization agents are added as required for treatment based on waste form development bench-scale testing. The container is inspected for free liquid and, if required, a sample is taken. The treated container is then removed from the solidification station.

D-3(a)(5) Support Systems

The support systems for the operation of SCMS are described in the following subsections.

D-3(a)(5)(a) Ventilation System

The major components of the SCMS ventilation system are a 10,000-cfm exhaust fan, a 350-cfm auxiliary exhaust fan, one 3000-cfm roof exhaust fan, two main HEPA filter banks, an exhaust stack, and associated ductwork and dampers (ref. Attachment D-16).

Building 793 Main Exhaust Fan. The main exhaust fan is located on the south side of the SCMS Low Bay.

The fan takes suction from the SCMS High Bay and the SCMS Low Bay through two main HEPA filter banks. The fan discharges to the outside atmosphere through the building exhaust stack.

The fan suction line branches in the SCMS Low Bay to draw air through two main HEPA filter banks. The first bank consists of eight 1000-cfm filters mounted in a box frame in the south wall of the SCMS High Bay. The other main filter bank consists of four 1500-cfm HEPA filters in a bagout housing mounted on the wall just west of the first bank.

There are two branches of ductwork to the inlet plenum of the bagout set of filters that provide exhaust from specific areas of the SCMS High Bay. The branches are identified as the upper-level exhaust duct and the lower-level exhaust duct.

The upper-level exhaust duct takes suction through three inlets in the extreme overhead of the SCMS High Bay. This flowpath is provided to remove any

flammable vapors that may accumulate as a result of processing operations. The lower-level exhaust duct circles the SCMS High Bay on the south, west, and north sides.

There are eight inlets to the lower-level duct; four along the south wall and four along the north wall. These inlets are provided to connect flexible exhaust tubing for local area contamination control.

Auxiliary Exhaust Fan. There is a small, 350-cfm auxiliary exhaust fan in the SCMS Low Bay, which is configured in parallel with the main fan.

Exhaust Stack. The main SCMS exhaust stack is mounted on a concrete foundation just south of the SCMS Low Bay. It is a free-standing stack, 3 ft 6 in. in diameter and 48-ft. tall. The main and auxiliary exhaust fans and the water wash ventilation fan all discharge through the stack.

There is an isokinetic flow tube near the top of the stack to provide a sample of the exhaust air to a stack monitoring system. The stack monitor is located in the SCMS Low Bay and monitors for gross beta and alpha particulate activity.

Roof Exhauster Fan. A 3000-cfm roof exhauster fan is located on the peak of the SCMS High Bay roof. This fan is normally operated only during warm weather to cool the building.

Outside Air Supply. Outside air enters the SCMS High Bay through an air-inlet filter bank located high on the wall in the northeast corner. The filter bank comprises standard furnace filters and is used to limit dust entering the building.

There are thermostatically controlled electric heating coils in the SCMS High Bay air inlet to preheat the air in the winter.

Air is supplied to the equipment in the SCMS Low Bay by an externally mounted swamp cooler through an internal distribution duct along the south wall.

D-3(a)(5)(b) Service Water System

Two separate water supplies make up the SCMS service water system. Demineralized water and potable water are supplied to the SCMS through underground piping. Both systems enter the building in the southeast corner of the SCMS Low Bay (ref. Attachment D-9).

Demineralized water comes from the EBR-II power plant purified water supply system at a pressure of about 80 psig. The line is routed to the SCMS High Bay where it supplies two hose outlets located on the south wall.

Demineralized water supplies SCMS tank treatment processes that require pure water.

Potable water is supplied by galvanized-steel piping from the main water line at a pressure of about 100–110 psig. At the point of entry into the SCMS Low Bay, this pressure is reduced to about 45 psig for distribution throughout the building.

D-3(a)(5)(c) CO_2 System

Carbon dioxide (CO_2) gas can be used at SCMS to deactivate hydroxide solutions in the carbonation system (ref. Attachment D-9). Gaseous CO_2 can be supplied by the CO_2 manifold located in the SCMS High Bay by three portable liquid CO_2 dewars.

D-3(a)(5)(d) Steam and Condensate System

Steam is supplied to the SCMS at 50 psig from a local boiler installed in the MFC 793 Annex. It is routed to the southwest corner of the SCMS High Bay where it supplies steam to the Water Wash Exhaust Air Heater. A relief valve provides overpressure protection.

The steam is drained through steam traps. All condensate is discharged to the building's industrial waste drain.

D-3(a)(5)(e) Compressed Air System

Compressed air is supplied to the SCMS by two air compressors. One is the main plant/breathing/process-instrument compressor that supplies most of the loads. The other is a small auxiliary instrument air compressor (ref. Attachment D-9).

The main air compressor is housed in a small shed on the southwest side of the SCMS Low Bay. It supplies air (at 110 psig) throughout the SCMS for the following uses:

— Hose outlets for general plant air use in the SCMS High Bay

— Water wash system ventilation flow control and pneumatically operated ventilation valves on the water-wash tank.

The auxiliary instrument air compressor is located inside the SCMS Low Bay near the south wall. The compressor supplies air (at 20 psig) to the following:

— Carbonate retention vessel level indicator

— Main building exhaust fan outlet damper controls

— Thermostat control for the building supply air preheat coils.

D-3(a)(5)(f) Nitrogen System

In the SCMS facility, nitrogen gas is typically used for purging and inerting when working with Na or NaK (ref. Attachment D-9).

D-3(a)(5)(g) Fire Suppression System

In case of small Class A, B, C, or D fires, portable fire extinguishers of CO_2, dry chemical, and Met-L-X types are placed in the facility for personnel use. Silica sand and carbonate are also available in these areas for personnel use on Na or NaK fires.

D-4 Tank Systems [IDAPA 58.01.05.012; 40 CFR 270.16]

D-4(a) SCMS Existing Tank Systems

SCMS presently contains two connected tank systems—the water wash system and the scrubber water system—that are considered to be existing tank systems in accordance with the definition in IDAPA 58.01.05.004 and 40 CFR 260.10 and the preamble in 51 Federal Register (FR) 25446, Section IV.B.4, *Design and Installation of New Tank Systems*. These tanks systems were built in 1980, installed in 1981, and put into service as HW/MW (or materials) storage or treatment tank systems prior to the promulgation date of the regulations (July 14, 1986).

These two existing tank systems—the water wash system and the scrubber water system—meet secondary containment requirements in accordance with IDAPA 58.01.05.008 and 40 CFR 264.193 as described in Subsection D-4(b). The secondary containment has been:

- Designed, installed, and operated to prevent any migration of HW/MW or accumulated liquid out of the systems to the soil or groundwater
- Designed to detect (or allow detection of) releases of HW/MW and accumulated HW/MW until the collected material is removed
- Constructed and lined with materials that are compatible with the HW/MW placed in the tank systems and have sufficient strength and thickness to prevent failure
- Constructed of a base that is sufficient to provide support to the secondary containment system
- Provided with leak detection capability (inspections) that will detect the failure of either the primary or secondary containment or the presence of any release of HW/MW or liquids in the secondary containment within 24 hours
- Sloped to drain and remove liquids resulting from leaks or spills.

D-4(a)(1) Assessment of Existing Tank System Integrity [40 CFR 270.16(a), 264.191]

Because these two tank systems meet the definition of an *existing tank system with secondary containment*, they do not require a written assessment of their integrity. However, information on the tank systems and ancillary equipment has been provided in this subsection.

The feed and ancillary systems for the water wash system and the scrubber water system are shown in Table D-6.

Table D-6. Existing Tank System Feed and Ancillary Systems.

Water Wash System	
Systems	Water Wash Vessel
Feed System(s)	Ventilation System Service Water System
Ancillary System(s)	Scrubber Water System Nitrogen System Argon System Compressed Air System Steam and Condensate System
Scrubber Water System	
Systems	Scrubber Water Tank
Feed System(s)	Water Wash System Carbonation System Service Water System
Ancillary System(s)	Compressed Air System Water Wash System Carbon Dioxide System Ventilation System Carbonate Retention Vessel Solidification System

The water wash system and the scrubber water system tanks and ancillary equipment have been designed, and have the structural integrity, to contain the hazardous characteristics of HW/MW processed in the systems. Inspection and

testing (preventative maintenance checks) of the water wash system and the scrubber water system conducted on a routine basis are detailed in SCMS-specific procedures. These preventative maintenance checks are performed in accordance with SCMS operating procedures. Major deficiencies and repairs are noted in the SCMS operating record.

The design standards (basis) to which the water wash system and the scrubber water system tanks and ancillary equipment (components) were constructed are provided below:

WWV. MFC has been reacting ignitable and reactive HW/MW (consisting mainly of Na/NaK) in the WWV since installation of the unit in 1981. The limits of flammability and detonability of hydrogen in air were important in designing the system and determining the operating limits. The flammability limits define the hydrogen/air concentration that will burn. This concentration ranges from 4 to 75 percent by volume of hydrogen in air. Within these limits, the lower-order explosions, called deflagration, can occur. The detonation limits define the hydrogen/air concentration that can result in high-order explosions. The detonation limits are from 18.3 to 59 percent by volume of hydrogen in air.

Both classes of explosion cause a sudden increase in pressure in a confined space. A detonation, involving a greater energy release, results in a theoretical pressure rise of 1464 psig, while a deflagration would result in a calculated pressure rise of 86 psig. Designing a vessel to contain the maximum theoretical pressure rise would be impractical and prohibitively expensive. Therefore, the WWV design was based on the pressure rise of a deflagration.

The air intake to the WWV is essentially open to atmosphere, with only the differential pressure caused by the exhaust fan to keep pressure surges inside. A sudden overpressure could blow back through the air intake. The WWV burn pan is administratively controlled to contain a maximum amount of ignitable and reactive HW/MW at any one time, but never to exceed 156 gallons/day. A detailed engineering evaluation is written and maintained in the facility's operating record to document the maximum amount of ignitable and reactive HW/MW that can be treated in the WWV at any one time and determine needed safety and administrative limits. These limits are implemented through operating procedures to prevent over pressurization of the WWV. Deactivation procedures are written to limit the rate of the reaction and therefore the rate of hydrogen generation.

The WWV is a vertical cylindrical tank with dished top and bottom heads. It is about 10 ft in diameter and 12 ft high. It is constructed of Type-304 stainless steel for corrosion resistance.

The WWV design was based on the pressure rise of a hydrogen deflagration explosion, not a detonation explosion. It was hydro-tested to 86 psig instead of the 75 psig (1.5 x design pressure) specified by the code to withstand the maximum hypothetical pressure of a hydrogen deflagration. It normally operates at or near atmospheric pressure since it is always vented to the atmosphere through the normal or emergency vent system. All internal structural welds were ground flat and the inside of the tank was polished to make the water wash easier. All welds were made in accordance with applicable welding code requirements. Prior to daily operation, visual inspections of all parts of the water wash system are conducted to detect for signs of damage and leakage.

An equipment access nozzle on top of the WWV consists of a flanged section of 36-in. pipe projecting vertically from the center of the top head. The opening is sealed with a blank flange bolted in place during deactivation operations. The exhaust vent line is a 12-in. pipe exiting off the side of the equipment access nozzle. The inlet vent line is 12-in. pipe entering into the side of the WWV about 2 ft from the bottom and on the opposite side from the exhaust line.

There is a personnel and equipment access door on the side of the WWV, near the bottom. It is oblong in shape, 2.5 x 4 ft. It swings inward to open and may be operated from the inside as well as the outside. It is closed by six manually operated lever closures and sealed with a neoprene gasket. The door has a 4-in. circular viewing port in a gasketed-flanged mounting. The port is made of tempered glass and rated to withstand a pressure of 150 psig.

An angle-iron flange is welded to the WWV surrounding the door to seal an external change room to the WWV.

Removable floor grating is installed near the bottom of the WWV to provide a working platform for personnel and equipment/components/debris. It is made of Type-304 stainless steel and has a working load rating of 150 lb/ft^2.

There are four penetrations in the WWV for spray lances, spaced 90° apart, and about 3.5 ft above the floor grating. Each lance consists of a spray gun, piping, and a spray nozzle. The spray gun valve is outside the WWV, from which the spray is controlled and directed. The pipe penetrates the wall through a flanged ball and socket joint, which is bolted to a mating flange and welded to the WWV wall. This arrangement allows the nozzle to swivel through an included angle of 80° in any direction. The inlet to the spray gun is a stub-pipe with a quick disconnect coupling, to which a water hose is connected. The section of spray pipe inside the WWV is about 30 in. long. It terminates in a spray nozzle and contains a check valve to prevent blowback in case of an explosion in the WWV.

There are two viewing ports adjacent to two spray lances for observing the interior of the WWV during deactivation operations. The glass is contained in a flanged housing with cushioning gaskets, that is bolted to a mating flange welded to the WWV wall. They are 6 in. in diameter and made of tempered glass designed to withstand a pressure of 150 psig.

There is a 12-in. flanged penetration into the WWV on the south side near the top. Its purpose is to route air lines and electrical power to the WWV for maintenance work. The cover flange for this penetration contains bulkhead fittings for tubing and the valve operator for the drip-pan drain valve.

The interior of the WWV is lighted by two explosion-proof light fixtures mounted inside the top head. They are powered from the 110 VAC lighting panel.

The only instrumentation directly associated with the WWV is a locally-reading thermometer and a pressure gauge on the outlet vent line on top of the WWV.

Venturi Scrubber. The venturi scrubber was designed to remove the smoke that results from burning 50 lb of ignitable and reactive HW/MW per hour, assuming that all of the burned HW/MW results in smoke, and remove particulates with a mean particle size of 0.37 micron at an efficiency of 97% or greater.

The venturi and separator are constructed of Type-304 stainless steel for resistance to corrosion by the hydroxide solution. The venturi is a convergent/divergent nozzle of rectangular cross section, about 14 in. wide. It has a manually-operated damper that varies the throat opening from 1 in. to a maximum of 2 in. The velocity/pressure-drop across the venturi is determined by the position of the damper. The design maximum pressure drop is 38 in. H_2O at 3000 cfm.

Instrumentation on the scrubber includes a locally-reading thermometer on the air outlet line and differential pressure sensor across the venturi. The differential pressure indicator is mounted on the water wash ventilation gauge panel on the wall south of the I&C panel. The I&C panel is located west of the scrubber.

Moisture Separator. The moisture separator was designed to remove 99.5% of the entrained moisture in the off-gas stream and is made of stainless-steel materials that are resistant to the 25% concentrations of hydroxide solutions.

Air Heater. The air heater was designed to raise the off-gas air temperature a minimum of 10°F. This rise in air temperature precludes the condensation of moisture in the HEPA filters.

The air heater consists of a Type-316 stainless-steel, finned-tube assembly. It is heated by approximately 15 psig steam from the building steam system. Steam flow to the heater is controlled by a manual globe valve. Condensate drains from the heater through a steam trap to the building drain main.

There are locally indicating thermometers at the inlet (D11-TI-111) and outlet (D11-T1-114) of the heater to monitor the air temperature rise.

HEPA Filters. The HEPA filters were designed to remove particulates with a 99.97% efficiency. Dual banks of filters were installed to assure continuous operation in the event of filter failure or excessive fume loading.

Scrubber Water Tank. This tank was designed to provide scrubber solution recirculation capabilities. This provides minimization of corrosive radioactive liquid HW/MW.

Scrubber Water Tank and Pumps. The scrubber water tank and pumps are located in the SCMS Low Bay Pit in the SCMS Low Bay. The pumps are piped in parallel configuration with common suction and discharge lines. Normally, one pump is operating with the other in standby. All valves in the system are manually operated with the exception of the automatic makeup water supply to the scrubber water holding tank. The system piping is Type-304 stainless steel with welded connections.

The transfer piping to the fixed and removable solidification units are also Type-304 stainless steel with welded connections. Isolation valves are manually operated stainless-steel gate valves.

The scrubber pumps are manufactured by March Co., Model TE-7R-MD. The pump is a magnetically coupled 15-gpm centrifugal pump, hermetically sealed unit with no physical connection between the motor and pump shaft. The motor is a 3/4 Hp, single-phase, 120 VAC, 60 Hz, explosion proof, induction motor. Since no shaft penetrates the pump case, the possibility of leakage through the shaft is eliminated. All wetted parts of the pump are stainless steel except a ceramic spindle and washer.

The scrubber water tank is a 350 gal, vertical, cylindrical tank with conical top and bottom heads. The maximum administrative capacity of the scrubber water tank is 300 gal. It is constructed of Type-304 stainless steel for corrosion resistance. It is vented to the atmosphere through the vent line to the carbonate retention vessel line and, therefore, not subjected to pressure. The tank has three separate level probes, for level control, indication, and high-level alarm.

Scrubber Water Sampler. The scrubber water sampler consists of stainless-steel lines and valves and a 300-cc stainless-steel sample chamber. The sample chamber is fitted with quick-disconnects to minimize any leakage during sampling. The scrubber pumps provide the flow upward through the sampler and then returns it to the scrubber water tank.

There is a pressure gauge (D21-PI-109) on the common discharge line from the pumps and a thermometer (D21-TI-112) and flowmeter (D21-FI-115) in the line at the venturi scrubber. Flow to the scrubber is regulated with a manual ball valve upstream of the flowmeter.

D-4(a)(2) External Corrosion Protection [IDAPA 58.01.05.012 and 58.01.05.008; 40 CFR 270.16(e) and 264.192(f)]

The WWV and scrubber water tank are constructed of stainless steel for resistance to corrosion and are designed to hold aqueous solutions. The WWV is located above ground inside the SCMS High Bay. The scrubber water tank is elevated off the floor of the SCMS Low Bay Pit. External corrosion is not a factor of concern as the external surfaces of the WWV and scrubber water tank are not in contact with soil or water.

D-4(b) New Tank Systems [IDAPA 58.01.05.012; 40 CFR 270.16]

SCMS presently contains one tank system—the carbonation system—that is considered to be a new tank system in accordance with the definition in IDAPA 58.01.05.004 and 40 CFR 260.10, and the preamble in 51 FR 254.46, Section IV.B.4, *Design and Installation of New Tank Systems*. This tank system was built in 1994, installed in 1995, and put into service as a HW/MW (or materials) storage or treatment tank system after the promulgation date of the regulations (July 14, 1986). As a result, a written assessment of the tank system was conducted. A copy of the assessment is provided in Attachment D-25. Information on the assessment is provided below.

D-4(b)(1) Assessment of New Tank System Integrity [IDAPA 58.01.05.012 and 58.01.05.008; 40 CFR 270.16(a) and 264.192(a)]

Feed and ancillary systems associated with the carbonation system are identified in Table D-7.

Table D-7. New Tank System Feed and Ancillary Systems.

Carbonation System	
Systems	Carbonation Vessel
Feed System(s)	Scrubber Water System Carbon Dioxide system
Ancillary System(s)	Water Wash System Service Water System Solidification System Compressed Air System

The written assessment on the carbonation system (ref. Attachment D-25) identifies the following:

— Design standards according to which the tank and auxiliary equipment were constructed

— Hazardous characteristics of the HW/MW being handled

— Design considerations to ensure:

- Tank foundations will maintain the load of a full tank
- Tank systems will withstand the effects of frost heave.

The tank assessment provides information on the structural integrity and suitability of the tank system for handling HW/MW and has been reviewed and certified by an independent, qualified, registered professional engineer.

The carbonation vessel is a 30-gal, stainless-steel tank with a conical bottom. It is classified as a new tank system and has been assessed, certified, and tested in accordance with IDAPA 58.01.05.018 and 40 CFR 264.192. This tank has been inspected for weld breaks, punctures, corrosion, and cracks. None were found. The tank is not coated. The original supports are being used. This tank is not subject to flotation, dislodgement, or frost heaving. The tank is bolted to the concrete floor. The anchors are sufficiently strong to prevent horizontal motion during design-basis seismic events or inadvertent disturbances. In addition to the anchors, tipping is precluded by the platform base-to-tank height aspect. The tank has been successfully hydrostatically leak tested to 25 psig. Operating pressure is not expected to exceed 10 psig.

Carbonation vessel pressure is relieved directly to the water wash scrubber, which operates at a negative pressure. Pressure is also monitored during carbonation operations. Hydroxide level is limited by the normal recirculating path—the carbonation vessel overflows to the scrubber drain. Flow and level are monitored through sight tubes in the vent and overflow drain. After carbonation, the tank is verified empty through the overflow drain sight tube.

A thermocouple and pressure gauge are installed to monitor tank temperature and pressure during the carbonation process.

Carbon dioxide (CO_2) gas is supplied from the CO_2 system.

D-4(b)(2) External Corrosion Protection [IDAPA 58.01.05.012 and 58.01.05.008; 40 CFR 270.16(e) and 264.192(f)]

The carbonation vessel is constructed of stainless steel for resistance to corrosion and is designed to hold aqueous solutions. The vessel is located above ground inside the SCMS High Bay. External corrosion is not a factor of concern because the external vessel surfaces are not in contact with soil or water.

D-4(b)(3) Description of Tank System Installation and Testing Plans and Procedures [IDAPA 58.01.05.012 and 58.01.05.008; 40 CFR 270.16(f) and 264.192(b), (d), and (e)]

The carbonation system is considered a new tank system. Installation and testing plans and procedures for the carbonation system are described below. An independent, qualified, registered professional engineer, trained and experienced in the proper installation of tank systems, inspected and certified that proper installation and testing of this system was completed prior to commencement of HW/MW treatment in the carbonation system (ref. Attachment D-25).

The inspections and testing for the carbonation vessel included the following:

- A visual inspection, inside and outside, of the carbonation vessel
- A visual inspection of components, piping and monitoring devices (such as pressure, flow, level, and temperature gauges)
- Integrity and leak tests
- Determination of the presence of weld defects, punctures, scrapes of protective coatings, cracks, corrosion, and other structural damage or inadequate construction/installation.

Flow tests using compressed air and water were performed, simulating conditions anticipated for carbonation. The vessel was successfully hydrostatically leak tested at 25 psig. Operational pressure is not expected to exceed 10 psig.

The tank has four legs that are bolted to four extension legs, which are anchored to the concrete floor. The anchors and bolts are sufficiently strong to prevent horizontal motion during design-basis seismic events or inadvertent disturbances. Tipping is precluded by the platform base-to-height aspect.

Ongoing inspection and testing (preventative maintenance checks) of the carbonation system, along with the existing tank system inspections and testing, are conducted on a routine basis and are recorded on SCMS operating logs. Major deficiencies and repairs are noted in the SCMS operating record.

D-4(b)(4) Dimensions and Capacity of Each Tank [IDAPA 58.01.05.012; 40 CFR 270.16(b)]

There are three HWMA/RCRA-regulated tanks associated with the existing and new tank systems. The following subsections describe the dimensions and capacities of each tank in the systems.

D-4(b)(4)(a) Water Wash System—Water Wash Vessel

The WWV is a vertical, cylindrical tank with dished top and bottom heads. It is approximately 10 ft in diameter by 12 ft in height with a calculated volume of 817 ft^3 (6112 gal). The administratively controlled capacity of the WWV is 90 gal.

D-4(b)(4)(b) Scrubber Water System—Scrubber Water Tank

The scrubber water tank is a vertical, cylindrical tank with conical top and bottom heads. It is approximately 3 ft 6 in. in diameter by 4 ft 10.25 in. in height with a calculated volume of 46.8 ft^3 (350 gal). The administratively controlled capacity of the scrubber water tank is 300 gal.

D-4(b)(4)(c) Carbonation System—Carbonation Vessel

The carbonation vessel is a vertical, cylindrical tank with a conical bottom. It is 1 ft 6 in. in diameter by 3 ft 3 in. in height with a calculated volume of 30 gal.

D-4(b)(5) Description of Feed Systems, Safety Cutoff, Bypass Systems, and Pressure Controls [IDAPA 58.01.05.012; 40 CFR 270.16(c)]

The following subsections describe the WWV, scrubber water tank, and carbonation vessel feed systems, safety cutoffs, bypass systems, and pressure controls (ref. Attachment D-9).

D-4(b)(5)(a) Water Wash System

Air flow is provided to the WWV by the ventilation system. Manual control is provided by throttling the outlet valve for the on-line HEPA filter to maintain air flow at 3000 cfm through the ventilation system as the system resistance changes because of HEPA filter loading. The WWV has automatic dampers to isolate it from the normal ventilation system, and vent to the atmosphere outside the building in the event that the fan fails during operation. The normal inlet damper and the outlet damper are air-to-open and spring-to-close. The emergency vent damper is spring-to-open and air-to-close type. If ventilation flow is stopped because of fan

failure or plugging of HEPA filters, a pitot-static tube in the discharge line of the fan provides a signal to pressure switch D11-PS-114. The pressure switch will deenergize solenoid valves D11-VS-15, -16, and -17 in the air lines to their respective dampers. The normal inlet and outlet dampers will close, and the emergency vent damper will open.

In order for dampers VR-15 and VR-17 to open, and VR-16 to close on fan startup, it is necessary to bypass the velocity-pressure switch, PS-114, until ventilation flow is established. This is done through a 30-second time delay circuit that is activated when the fan is started.

Service water is supplied to the WWV for ignitable and reactive HW/MW deactivation operations. Water is supplied at a pressure of about 80 psig. Operating procedures limit spraying times to 30 seconds out of every minute when operating the spray lances during treatment in the water wash vessel.

D-4(b)(5)(b) Scrubber Water System

All the hydroxide solution that gravity drains from the WWV and from the venturi scrubber goes directly to the scrubber water tank. The scrubber pumps take suction from the tank and pump the hydroxide solution back to the venturi scrubber or to the WWV for residual deactivation operations. Water or hydroxide solutions are recirculated in this manner until the hydroxide concentration reaches 15 wt%, then it is pumped to the carbonation system for deactivation operations. Reusing the scrubber water in a recirculating system reduces the amount of liquid requiring treatment. Water for the initial fill and makeup to the scrubber water tank comes from the service water system through an automatic makeup valve. In addition, the scrubber water tank can be pumped from the tank into collection drums for off-site disposal. The transfer line is gravity drained back to the scrubber water tank and is maintained empty.

The scrubber water tank is vented to the atmosphere through the vent line into the carbonate retention vessel; therefore, it is not subjected to pressure. The tank has three separate level probes for level control, indication, and high-level alarm. The level control probe has two setpoints that feed a level control switch. At the low setpoint, the switch opens a solenoid valve in the service water line to the tank. When water reaches the high level setpoint, the switch closes the solenoid valve, shutting off makeup flow to the tank. The level indicator probe generates a linear signal to feed a meter, calibrated 0–100% on the SCMS High Bay I&C panel. The alarm probe closes a switch on high level in the tank to actuate an alarm on the SCMS High Bay I&C alarm panel.

There is a pressure gauge on the common discharge line from the pumps, and a thermometer and flowmeter in the line to the venturi scrubber. Flow to the scrubber water tank is regulated with a manual ball valve upstream of the flowmeter.

During the transfer of the hydroxide solution for reacting the container residuals and/or debris in the WWV, or during transfer of carbonate solution to the solidification system, an operator will be positioned at the isolation valve for isolation of the system in case of an emergency.

D-4(b)(5)(c) Carbonation System

The scrubber water system supplies the hydroxide solution to the carbonation vessel. Typically up to a 15 wt% hydroxide solution is fed to the carbonation vessel at approximately 10 gpm and 28 psig. Gaseous CO_2 is introduced into the carbonation vessel through a sintered metal sparge element of 10 μm porosity.

The vessel temperature is continuously monitored during carbonation operations by an installed thermocouple. The vessel temperature is administratively controlled so as not to exceed 190°F during carbonation operations.

The carbonation vessel overflows continuously to the scrubber water tank during carbonation operations. If the vessel were to overfill, the solution would flow through the vent line, which would again drain to the scrubber water tank.

The carbonation vessel pressure is not expected to exceed 10 psig and is relieved through the vent line to the water wash scrubber. Vessel pressure is monitored during carbonation operations by an installed 0–15 psig pressure gauge.

Carbonation vessel flow and level are monitored through installed sight tubes located in the vent and overflow lines. The CO_2 gas supply is pressure controlled by an installed pressure regulator and flow controlled by an installed adjustable flow meter.

D-4(b)(6) Diagram of Piping, Instrumentation, and Process Flow [IDAPA 58.01.05.012; 40 CFR 270.16(d)]

The P&IDs are provided in Attachment D-9. A Standard Piping and Instrument Symbols and Lettering Legend is provided in Attachment D-8.

D-4(b)(7) Containment and Detection of Releases [IDAPA 58.01.05.008; 40 CFR 264.193]

Secondary containment systems are provided for all HWMA/RCRA tank systems in SCMS. Drawings of and specifications for the secondary containment are provided in:

- Attachment 1, Section B, MFC Facility Description Attachment: B-13, Floor Plans Schematic Showing Facility Arrangement and Maximum Storage Capacity
- Attachment D-26, Drawing of SCMS Low Bay Pit.

Leak detection will be performed by daily visual inspections of the tank systems and their designated secondary containments. Personnel who perform the inspections will be trained in accordance with the SCMS HWMA unit specific procedures. The extensive nature of this training program ensures that inspectors will recognize the makeup and source of hazardous material leakage that could occur from SCMS tank systems.

Response to spills that may occur at SCMS is addressed in Attachment 7, Section G, Contingency Plan.

D-4(b)(8) Plans and Description of the Design, Construction, and Operation of the Secondary Containment System [IDAPA 58.01.05.012 and 58.01.05.008; 40 CFR 270.16(g) and 264.193(b) through (f)]

Specifications, drawings, and vendor data related to the secondary containment for existing and new tank systems located at SCMS are provided as described in Subsection D-3(a).

Structurally, the walls and floor of secondary containments are designed to resist the following forces:

- Dead loads (such as tank, tank contents, concrete, and steel liner)
- Soil pressure on external wall surfaces
- Hydraulic pressure that would occur on the walls and floor should the tank contents leak in the secondary containment
- UBC Zone-2 seismic forces.

The ground-water level in the MFC area is 640 ft or more below the surface and was not considered a factor in the design of the secondary containment pits because of its depth. SCMS is constructed such that the surface drainage is routed away from the structure. Consequently, water is kept from reaching the soil/gravel below the foundations and secondary containment pits. This alleviates the problem of frost heaves or decreased soil strength due to saturation.

All SCMS tank systems and secondary containment systems are inside the SCMS buildings and are constructed in such a manner that surface drainage is routed away from the structures and run-on and infiltration of precipitation is prevented.

All secondary containment was inspected when installed to ensure that it was free of cracks or gaps. The water wash system, scrubber water system, and carbonation systems are situated within the secondary containment so the secondary containment prevents HW/MW from coming into contact with surrounding soil.

None of the SCMS tank system secondary containments are equipped with a leak detection system. Therefore, leak detection will consist of daily visual inspections of the secondary containment by SCMS facility personnel during operation of the tank systems. Records of the daily inspections will be maintained as part of SCMS operating records. Response actions to spills or leaks of HW/MWs are detailed in Attachment 7, Section G, Contingency Plan.

D-4(b)(8)(a) Tank Age Determination [IDAPA 58.01.05.008; 40 CFR 264.193(a)]

The two tanks associated with the existing tank system, the WWV and scrubber water tank, were built and installed in 1980 and 1981, respectively. Receiving reports and as-built drawings document the age of the two tanks used in the systems (see Attachments D-11, D-18, and D-27).

D-4(b)(8)(b) Requirements for Secondary Containment and Leak Detection [IDAPA 58.01.05.012 and 58.01.05.008; 40 CFR 270.16(g) and 264.193(b) and (c)]

The HWMA/RCRA tank systems in SCMS have secondary containment as described below:

Water Wash System and Carbonation System. The WWV and the carbonation vessel sit above a reinforced concrete floor in the SCMS High Bay area. The floor has been sealed with a corrosion-resistant epoxy paint to provide an impermeable surface and prevent migration of HW/MW. The floor in the SCMS High Bay has a 2-in. curb and was designed and installed to have a minimum floor

loading of 1500 psf (ref. Attachment D-28). The reinforced concrete below the vessels is sloped (east and west) to allow drainage of spilled HW/MW to floor drains located on the east and west side of the vessels. The floor drains are routed to the SCMS Low Bay Pit located in the SCMS Low Bay (ref. Attachment D-26). A valve is installed in the floor drain line that will direct any spilled HW/MW to the SCMS Low Bay Pit or to a collection container (drum) located in the SCMS Low Bay Pit. The Low Bay Pit acts as an external vault for both the WWV and the carbonation vessel. The maximum amount of HW/MW within the WWV and the carbonation vessel at one time is 90 and 30 gal, respectively.

The SCMS Low Bay Pit has a floor with a 1.5-in. slope design (southwest to northeast) and has been sealed with corrosion-resistant epoxy paint. The vault and joints are sealed to a point 0.5 ft above the floor of the SCMS Low Bay Pit. The 300-gal scrubber water tank and the 4,272-gal empty carbonate retention vessel (non-HWMA) are located in the Low Bay Pit. The scrubber water tank, as the permitted and only tank in the pit for HW/MW, must be within secondary containment that holds more than 100% of its volume.

The Low Bay Pit can readily contain approximately 438 gal of HW/MW, which is greater than 100% of the volume of the scrubber water tank at 300 gal. The secondary containment volume of the SCMS Low Bay Pit is determined by accounting for 0.5 ft of epoxy up the wall and subtracting the displacement caused by the carbonation vessel. The calculation for the available secondary capacity of Low Bay Pit is shown in Table D-8.

Table D-8. SCMS Low Bay Pit Secondary Containment Capacity.

Capacity Derivation	
Dimensions of Low Bay Pit	17 x 13 x 6 ft (tall)
Volume of Low Bay Pit	(l) x (w) x (h) = V 17 x 13 x 0.5 ft = 110.5 ft^3; 826 gal
Volume displaced by carbonate retention vessel	(π) x (r^2) x (h) = V 3.14 x $(11.5/2)^2$ft x 0.5ft = 51.9ft^3; 388 gal
Available secondary capacity of Low Bay Pit	V pit up 0.5 ft - V vessels= secondary capacity 110.5 ft^3 – 51.9 ft^3 = 58.6 ft^3 or 438 gal

No volume displacement was considered for the scrubber water tank, which sits in the SCMS Low Bay Pit, because it is elevated approximately 0.5-ft off the floor by footings. A sump and electric sump pump are located in the northeast corner of the SCMS Low Bay Pit. This sump pump can be routed to discharge to a collection container (drum) or to the carbonate retention vessel (used only for non-HW/MW leaks or spills). The floor drain piping (primary piping), as well as the drains from the WWV, are within secondary piping, which is also routed to the SCMS Low Bay Pit. If a spill occurred, this routing of the floor drains to the SCMS Low Bay Pit, the floor being sloped away from the vessels, and the sump pump would meet the requirements in IDAPA 58.01.05.008 and 40 CFR 264.193(c)(4) for secondary containment drainage and removal within 24 hours. The WWV is accessible for daily inspections while in operation. This daily inspection meets the requirements of IDAPA 58.01.05.008 and 40 CFR 264.193(c)(3) for leak detection.

Scrubber Water System. The scrubber water tank sits above a reinforced concrete floor in the north end of the SCMS Low Bay Pit located in the SCMS Low Bay. The SCMS Low Bay Pit has a floor with a 1.5-in. slope design (southwest to northeast, ref. Attachment D-23) that has been sealed with a corrosion-resistant epoxy paint that acts as secondary containment and as an external vault for the scrubber water tank. The sloped floor in the SCMS Low Bay Pit allows for spills of HW/MW from the scrubber water tank to drain to the northeast corner. This design feature provides for leak detection for the scrubber water tank through daily visual inspection while in operation. The vault and joints are coated to a point 0.5 ft above the floor of the SCMS Low Bay Pit so that the vault can readily contain a maximum volume of approximately 438 gal of HW/MW which is >100% of the volume of the scrubber water tank (300 gal).

Capacity calculations are provided in Table D-8. A sump and electric sump pump are located in the northeast corner of the SCMS Low Bay Pit. This sump pump can be routed to discharge to a collection container (drum). If a spill occurred, the collection of HW/MW in the SCMS Low Bay Pit and the sump pump would fulfill the requirement in IDAPA 58.01.05.008 and 40 CFR 264.193(c)(4) for secondary containment drainage and removal within 24 hours. The daily inspections performed for the SCMS Low Bay Pit meet the requirements of IDAPA 58.01.05.008 and 40 CFR 264.193(c)(3) for leak detection.

D-4(b)(8)(c) Requirements for External Liner, Vault, Double-Walled Tank or Equivalent Device [IDAPA 58.01.05.012 and 58.01.05.008; 40 CFR 270.16(g) and 264.193(d) and (e)]

Volume calculations show that the SCMS Low Bay Pit, which acts as secondary containment for SCMS tanks used for HW/MW treatment and storage (WWV, carbonation vessel, and the scrubber water tank), will provide sufficient volume to contain 100% of the volume of the scrubber water tank and all piping that could drain into the SCMS Low Bay Pit. All the secondary containment (curbing, sealed floors, and pits/vaults) in SCMS are constructed in such a manner that surface drainage is routed away from the structures and run-on, and infiltration of precipitation is prevented.

D-4(b)(8)(d) Secondary Containment and Leak Detection Requirements for Ancillary Equipment [IDAPA 58.01.05.012 and 58.01.05.008; 40 CFR 270.16(g) and 264.193(f)]

SCMS High Bay floor drain piping, as well as drains from the WWV, carbonation vessel, and water wash scrubber are within secondary piping, which is routed to the SCMS Low Bay Pit. This provides leak detection capability and secondary containment for below ground piping associated with the tank systems. All other ancillary equipment associated with the water wash system, scrubber water system, or carbonation system is accessible for daily visual inspections while in operation. Daily inspections will be performed and the inspection logs will be maintained as part of the SCMS operating record. Response actions to spills or leaks of HW/MWs are detailed in Attachment 7, Section G, Contingency Plan.

D-4(b)(9) Controls and Practices to Prevent Spills and Overflows [IDAPA 58.01.05.012 and 58.01.05.008; 40 CFR 270.16(I) and 264.194(b)]

Controls and practices to prevent spills and overflows include the following:

— Process equipment design controls

— Operational administrative limits for tank filling

— Instrumentation that monitors for overfilling.

Monitoring is performed by facility personnel on duty during operations and during daily inspection of the tank systems. A brief description of relevant operating procedures used to prevent spills and overflows from tank systems is listed below:

SCMS-OI-1 (Facility Information and Administrative Requirements) provides a description of the SCMS (including secondary containment, ventilation systems, fire detection and suppression systems and equipment) and scope of shop operations and uses. It also addresses administrative and environmental-safety-and-health requirements applicable to the facility such as requirements for all waste activities in which alkali metals (typically Na and NaK) are being handled or transferred.

SCMS-OI-7 (Water Wash Vessel) provides instructions for operating the water-wash vessel which is used to treat alkali metal bearing wastes using water. This procedure also covers the transfer of liquids to the scrubber tank from drums and containers, and the transfer of liquids from the scrubber tank into drums for additional treatment.

Overfilling controls for the tank systems are described in following subsections.

D-4(b)(9)(a) Scrubber Water System

When the scrubber water system is in operation, the “makeup” to the scrubber water tank (service water or hydroxide solution from the WWV) is monitored and controlled by three separate level probes for level control, indication, and high-level alarm. The level control probe has two setpoints that feed a level control switch. At the low setpoint, the switch opens a solenoid valve in the service water supply line to the tank. When water reaches the high-level setpoint, the switch closes the solenoid valve, shutting off makeup flow to the tank. The level indicator probe generates a linear signal to feed a meter, calibrated 0–100%, on the SCMS High Bay I&C panel. The alarm probe closes a switch on high level in the tank to actuate an alarm on the SCMS High Bay I&C alarm panel. Readings on the local level indication for the scrubber water tank are required every half-hour during HW/MW processing. There is a pressure gauge on the common discharge line from the pumps, and a thermometer and flowmeter in the line to the venturi scrubber. Flow to the scrubber is regulated with a manual ball valve upstream of the flowmeter.

D-4(b)(9)(b) Carbonation System

When the carbonation system is in operation, hydroxide solution from the scrubber water tank flows into the conical bottom of the carbonation vessel and fills the carbonation vessel until it overflows at the outlet line on the side of the vessel. The vessel level is maintained at the outlet line location on the side of the vessel as the solution flows back to the scrubber water tank. Level indication is provided by the sight tube connected to the vessel outlet on the side of the vessel. A freeboard area is maintained in the vessel above the outlet line. This freeboard area is vented to the

water wash venturi scrubber, so any vessel overfill would flow through the vent line and return to the scrubber water tank.

D-5 Miscellaneous Units [IDAPA 58.01.05.08 and 012; 40 CFR 264.601 and 270.23]

RSWF is presently the only HMWA unit at the MFC considered to be a miscellaneous unit. This section, therefore, only includes information on RSWF.

D-5(a) Description of Miscellaneous Units [IDAPA 58.01.05.012; and 270.23 (a)(1)]

A general description of the RSWF facility, and photographs and schematics of RSWF are provided in Attachment 1, Section B, MFC Facility Description. More details of the RSWF are provided in the following subsections.

D-5(b) Environmental Performance Standards for Miscellaneous Units [IDAPA 58.01.05.08; 40 CFR 264.601]

RSWF is located, designed, constructed, operated, and maintained in a manner that will ensure protection of human health and the environment. The prevention of any releases that may have adverse effects on human health or the environment due to the migration of MW stored in RSWF to the ground water, air and/or soil is described in the following subsections.

The potential pathways for the release of hazardous waste constituents from RSWF stored waste are the air and soil. The hypothetical causes of a release to the soil would require a breach of the liner from corrosion due to long-term undetected cathodic protection failure in combination with a waste container failure. The hypothetical causes of a release to the air are sodium-water reactions leading to sodium combustion and a hydrogen explosion. The release to the air would also have to be initiated by corrosion or some general failure of the waste containment system. All of these mechanisms require multiple mechanical failures and repeated long-term failure of the inspection and monitoring program to indicate a loss of cathodic protection.

Another potential cause of a release is equipment failure leading to dropping a waste container during waste transfer operations.

There are many features engineered into the RSWF design to prevent releases that may affect human health or the environment due to the migration of MW in the soil, air or ground water. The design features of the facility or physical characteristics of the area are described in Section D-5(m), Migration of Waste Constituents.

In addition, a soil corrosivity mapping of the site was performed in 1989 and revealed that the soil was mildly to moderately corrosive and that impressed current cathodic protection was needed to adequately protect the waste.

In June 1989, an independent corrosion engineering firm (CH2M Hill, Boise, ID) performed soil corrosion mapping of the RSWF. The electrical resistivity of the soil was measured by the Wenner four pin method. The tests consisted of 90 soil resistivity measurements at average depths of 2.5, 5.0, 7.5, 10.0, and 15.0 ft. Both average and layer resistivity calculations were made from these measurements. See Attachment D-29 for Field Testing Report.

The soil corrosivity mapping and soil corrosivity analysis made on soil as part of the 1988 liner removal indicated that the worst case soil is in the corrosive range. This corresponds to a corrosion rate of as much as 0.06 inches per year. Therefore, if the cathodic protection system were to completely fail in its protection of liners, no more than 0.06 inches/year of corrosion would be expected. This represents just less than a maximum of 25% penetration through the 0.25 in. wall thickness of a liner in a years time. In general, the RSWF soil ranges from mildly to moderately corrosive based on the ranking. This corresponds to a corrosion rate of 0.02 to 0.06 in./year. Based on these results, the corrosion engineers recommended that an impressed cathodic protection system be installed on all RSWF liners.

D-5(c) Miscellaneous Unit Waste [IDAPA 58.01.05.08; 40 CFR 264.601(a)(1), 264.601(b)(1), 264.601(c)(1)]

MFC was involved in numerous experiments in support of the Liquid Metal Fast Breeder Reactor (LMFBR) Development Program, which is no longer being conducted. Experiments in the LMFBR program resulted in solid waste consisting of reactor and coolant loop components that are contaminated with elemental sodium and NaK. These wastes are primarily metal parts that were in contact with, and are therefore, contaminated with reactive metals. The sodium and NaK contamination causes the HW/MW designation because these reactive metals are characteristic hazardous wastes due to reactivity and ignitability.

The processes that currently generate these wastes include hot cell operations and tests, and laboratory testing. The majority of the waste currently in the RSWF is from hot cell operations and tests. These wastes consist of subassembly hardware contaminated with sodium, Fuel Cycle Facility wastes (1964-1969), and routine wastes such as sodium-contaminated facility hardware that is no longer useful or required.

The hazardous constituents currently stored in RSWF include elemental sodium, sodium-potassium alloy (NaK), lead, barium, cadmium, and chromium. With the Fuel Conditioning Facility and the Hot Fuels Examination Facility generating waste from remote-handled reactor fuels research and other hot cell activities the waste may contain arsenic, barium, cadmium, chromium, lead, mercury, selenium, and silver. The physical and chemical properties of these constituents are shown in Table D-9.

Table D-9. Physical and chemical properties of constituents that may be present at RSWF.

Hazardous Constituents	Atomic Weight	Boiling Point (°F)	Water Solubility	Specific Gravity	Melting Point (°F)
Sodium	23	1621	reacts	0.968	208
NaK	36	1443	reacts	0.847	12
Arsenic	75	1135	0	5.73	1508
Barium	137	2984	reacts	3.51	1337
Cadmium	112	1409	0	8.64	609
Chromium	52	4842	0	7.20	3375
Lead	207	3163	0	11.35	621
Mercury	201	673	0	13.55	-37.97
Selenium	79	1263	0	4.81	423
Silver	108	4014	0	10.5	1.763

A summary of each type of waste stored in RSWF including when, where it was generated, and volume is shown in the INL Site Treatment Plan.

Sodium is ignitable and reactive and carries the RCRA hazardous waste codes D001 and D003. NaK is reactive and carries the D003 RCRA code. Lead, except when used for shielding in the containers, carries the RCRA code D008 for toxicity. The RCRA codes for cadmium and chromium are D006 and D007 for toxicity.

The majority (by number of liners) of the HW/MW presently stored in the RSWF is hazardous because of the presence of elemental sodium.

The NaK alloys used in the LMFBR program were liquid at ambient temperatures. NaK, a liquid metal, is the only liquid stored in the RSWF. Procedural restrictions on the placing of liquids (other than NaK) in the RSWF containers have been enforced since the facility first began accepting waste. At ambient temperatures, elemental sodium (208°F melting point) and lead are solid. In addition, cadmium

and chromium are solid including any of the other potential hazardous constituents listed above.

In addition to the HW/MW, the RSWF also stores non-waste items including, spent nuclear fuel and accountable nuclear material, some of which may contain sodium. The RSWF stores non-hazardous radioactive waste. These materials are stored in separate liners from the HW/MW.

The hazardous constituents are safely contained by the waste containment system of the RSWF, as long as the integrity of the containers is maintained. The hazardous constituents and the solid waste hardware associated with the constituents are fully compatible with the stainless steel and carbon steel waste containers.

The inner waste containers with Na/NaK were packaged in an inert atmosphere isolating the HW/MW from moisture and oxygen, which reduces the concern for over-pressurization of the containers and generation of gases. In addition, no absorbents are used with Na/NaK. There is a potential for ambient water vapor to be converted to hydrogen when the lid is welded on. To mitigate hydrogen gas production procedures and practices are in place to provide assurance the liners are free of visible moisture prior to use. If moisture is identified a pump or vacuum is used to remove any moisture from the liner or the liner is air dried. If unable to remove visible moisture, the liner is simply not used. Prior to opening a liner an evaluation is performed to determine if a liner contains a hazardous atmosphere. The liner may be purged prior to opening in a controlled manner in accordance with operational procedure RSWF-OI-002.

The potential for migration of waste is addressed in Section D-5(m).

The waste stored at RSWF is tracked by grid location (i.e., X Y coordinates). Each liner has a welded alpha numeric designation located on the cover of the liner that corresponds to the grid location. The alpha numeric designation is used in IWTS as the container barcode.

D-5(d) Containment System [IDAPA 58.01.05.08 and 012; 40 CFR 264.601(b)(2) and 270.23 (a)(2)]

The containment system in RSWF consists of rows of sealed carbon-steel pipes, referred to as liners, buried vertically in the ground in bored holes such that the top of the liners protrude approximately 4 in. above ground. Photographs and schematics of the liners are provided in Attachment 1, Section B, MFC Facility Description.

Prior to placing the liners in the storage area, several feet of gravel and soil was placed in the liner area and graded to slope gently from the centerline to the parallel sides, which were banked with gravel. This grade promotes run-off, reducing percolation, maximized operating days, and also serves to prevent run-on into the area from normal or anticipated abnormal events. A drawing showing elevation contours of the RSWF has been added as Attachment D-30. This drawing also shows the drainage systems in place at RSWF.

The RSWF is designed with a grid of approximately 27 rows spaced approximately 12 ft apart with approximately 50 liners per row. The liners are arranged on approximate 6-ft centers in the rows. The volume capacity, based on the size of the waste containers that are placed in storage, is approximately 53,000 gal. This assumes that approximately 1,320 of the liner sites are usable for MW storage at the RSWF. See Attachment D-31 for the current liner configuration drawing, which is a detailed plan view of the RSWF showing the identification grid, liner types, the year the liners were installed, and the status of each liner or location (e.g., full, empty, unusable, removed, etc.).

The installation method for the liners has provided for stability of the liners and past operating experience has demonstrated that the liners will stay in place as discussed in the following paragraphs.

The liner locations are prepared by drilling approximately 24, 32, 34, or 38 in. diameter holes into the ground and centering a 16, 24, 26, or 30 in. diameter steel pipe, respectively, in the hole. Approximately 2 in. of sand slurry was placed in the bottom of each hole and around the sides of the liners. The sand slurry was backfilled in place in layers no greater than 48 in. thick. Each layer was vibrated to ensure that the fill completely surrounded the liner and that there were no voids. The soil beneath the liners was undisturbed. The sand slurry in essence holds the liner in place, since it provides a solid monolith surrounding the liner in the ground. The sand slurry has also shown to prevent subsidence around the sides and tops of the liners.

The first 30 standard liners installed in 1964 had welded hemispherical bottoms. Frost heaves caused the empty liners to lift out of the ground, so the design was changed to incorporate a base plate welded to the bottom with an outside diameter 2 to 3 in. larger in diameter than the liner. Operational experience has shown that the oversized base plates serve as a very effective anchor and makes it impossible that a liner would move vertically without the occurrence of an unusual and unanticipated event. The early hemispherical-bottom liners were all removed from the RSWF.

Past experience has shown that excavation down to the base plate is required to remove a liner from the ground. An early attempt to remove a liner from the ground without first excavating around it showed that a pulling force of approximately 48,000 pounds did not move the liner.

The height of the top of the liners above ground surface was specified at approximately 4 in. for the following reasons; 1) Empty liners too close to the ground surface are susceptible to surface water, 2) The protrusion of the liner above the ground facilitates access for welding the liner lid in place and 3) Liners too far above the ground surface could be hit by the forklift used to place or remove material into or from a liner.

MW is first containerized into one of two inner container systems referred to as HFEF-5 cans and SLSF cans. After placing the container system in the liner, shielding is provided by placing a 30 in. concrete or 6 in. steel shield plug in the liner and welding it to the top of the liner, as applicable. This configuration is illustrated in the photographs provided in Attachment 1, Section B, MFC Facility Description.

D-5(d)(1) Carbon-Steel Installed Liners

There are primarily three standard size liners used in RSWF. They are 16, 24, and 26 in. in diameter. Descriptions of the liners follow.[4] Fabrication drawings of each liner type are found in Attachment D-32.

16-in. Diameter Liners. These are the standard liners used for MW storage in the RSWF and are sized to accept an inner container system referred to as the HFEF-5 can. These 16-in. liners are constructed of either schedule-10 carbon steel and 16 in. in diameter by 12.33 ft, or schedule-40 carbon steel and 10 ft long with a 19-in. diameter oversized base plate welded to the liner bottom. They are sealed with a concrete shield plug/lid assembly welded into the top of the liner.

24-in. Diameter Liners. These liners were sized, fabricated, and installed to accept the first generation 16-in. liner and inner container referred to as a “paint can,” in which MW was stored prior to 1978. These 24-in. liners are constructed of Schedule-10 carbon steel and are 24 in. in diameter by 13.67 ft long, with a 26-in. diameter base plate. The 24-in. liners containing MW have a carbon-steel shield plug assembly welded into the top.

[4] Liners and inner container systems dimensions are approximate sizes.

26-in. Diameter Liners. These liners are also used for MW storage in the RSWF and are sized to accept an inner container system referred to as the SLSF can. These 26-in. liners are constructed of 0.25-in. thick carbon steel and are 26 in. in diameter by 13 ft long, have a 28-in. diameter base plate, and are closed with a welded 6-in. carbon-steel plug.

Nonstandard liners include one 60-in. diameter by 10.8 ft long liner that was constructed to store an EBR-II cold trap and two 48-in. diameter by 3.81-ft long liners that were constructed to store EBR-II nuclide traps.

All the liners are protected from corrosion by a cathodic protection system described in Subsection D-5(d)(4). A schematic of the cathodic protection system is provided in Attachment 1, Section B, MFC Facility Description. The soil in the liner area provides passive radiation shielding that, in conjunction with radiation shield plugs placed in the top of the liners, provides shielding to protect human health and the environment.

Liner lids are sealed by welding a shield plug/plate in place. Lids are welded in place (as directed by operating procedure RSWF-OI-001) in accordance with the INL Welding Manual, and a visual inspection is performed of the final weld for cracks, through fusion, and undersized weld.

Two other types of liners with diameters of 24 and 30 in. were designed with flanged lids that are gasketed/bolted in place. The flanged 24-in. liners contain non-HW/MW, low level waste only. The 30-in. liners are maintained empty. They were installed to be available as overpacks during previous 24-in. liner relocation activities.

Each liner is subjected to leak testing after construction and prior to installation to ensure that it is free of cracks and gaps. These tests are performed prior to the liner being placed in the ground. Hydrostatic tests are conducted after the bottom plate is welded on. If leaks are detected, the liner is repaired and retested until it passes.

In order to ensure the structural integrity of the liners, they are fabricated in accordance with ASME standard codes and procedures. This includes specified welding procedures, tolerances, and grades of material. All of the liners are fabricated of carbon steel. Carbon steel and stainless steel are compatible with the MW stored in the RSWF. See Attachment D-32 for the liner drawings that specify welding and material fabrication details.

D-5(d)(2) Inner Containers

MW was first containerized in one of three types of inner container systems referred to as paint cans, HFFF-5 cans, or SLSF cans (nuclide traps and cold traps are not placed into HFEF-5 or SLSF cans). The type of inner container system used depends on when it was loaded and the type and radiation levels of the MW generated. Each of these inner container systems is described below. Photographs with illustrations of each inner container are provided in Attachment 1, Section B, MFC Facility Description.

Paint Cans. This inner container, used between May 12, 1964, and June 26, 1978, consists of a mild steel pail, 72 in. high and 11.25 in. in diameter. The lower section of the container was fabricated from 20-gauge steel tube with a welded side seam and bottom. The upper section was a bottomless standard 5-gal steel pail body (22 gauge) attached to the lower section with a circumferential weld. The container was closed with a standard 16 lug foam-rubber gasketed cover and placed into the original 16-in. liners. All of the 16-in. liners that contain these “paint cans” were extracted from the ground and placed within new, cathodically protected, 24-in. liners.

Smaller commercial pails may or may not have been placed inside the paint cans. These pails are 10.25 in. ID and are 10, 12, and 24 in. high to accommodate various sizes and quantities of waste.

Both the 72 in. waste container and the small pails were subjected to a series of drop tests to establish their resistance to rupture. In these tests, the large waste container was loaded with heavy scrap metal or with small pails loaded with scrap and was dropped from various heights onto soil or a steel plate. These tests demonstrated that the small pails might collapse partially, but would not rupture or open, and the large container would deform slightly, but not rupture or open.

HFEF-5 Cans. This inner container system consists of an inner and outer container. The inner container is placed inside the outer container, which is seal-welded shut and placed in the RSWF liners for storage. The inner container, constructed of carbon steel, is the hot cell waste receptacle. It is a cylindrical, 14-gauge carbon-steel (AISI 1010-1020) container, 59.125-in. long by 11.60-in. in diameter. It is closed by a 0.375-in. thick lid fastened to a bolt ring in the top of the container by six cap-head bolts. The outer containers are the out-of-cell containers and are used to prevent the spread of contaminants from the inner container to the environment. It is a cylindrical, 14-gauge, Type-304 stainless-steel container, 73.5-in. long by 12.75-in. in diameter.

HFEF/S and HFEF/N containers were earlier versions of HFEF-5 cantainers. These containers had similar dimensions as HFEF-5 containers and were discontinued in 1987. Waste packaged into the HFEF/S and HFEF/N are still being managed at RSWF.

SLSF Cans. This inner container system is constructed like the HFEF-5 can, except that it is larger in diameter. It is a cylindrical, 11-gauge Type-304 or -308 stainless-steel container, 20.76 in. in diameter by 122.00-in. long. It is closed by a 1.5-in. thick lid fastened to a bolt ring in the top of the container by six cap-head bolts. In addition to using the SLSF inner can, three 45-gal stainless-steel cans are also used as the inner waste storage containers. They are 14 gauge, 21 in. in diameter by 32-in. long, and are closed with a 0.375-in. thick lid fastened to a bolt ring in the top of the container by 10 cap-head bolts. The SLSF outer container is a cylindrical, 11-gauge carbon-steel (AISI 1010-1020) container, 22.25 in. in diameter by 134.5-in. long. It is closed by a 1.5 in. thick lid that is seal-welded in place.

In addition, the bulk sodium storage container was placed inside the SLSF outer container for storage. The bulk sodium storage container is a cylindrical, type 304 stainless steel (0.25 in. wall) container, 17.5 in. ID by 32.875 in. long. The container cover is welded in place.

Nonstandard Containers. An EBR-II primary cold trap was placed directly in a specially designed 60-in. liner. The cold trap serves as the container for the waste sodium in it. Double containment is provided for the MW by the cooling jacket around the vessel. This jacket was drained of bulk MW and all pipes and fittings sealed prior to its placement in storage. Only residual MW that could not be drained or blown from the jacket remains.

EBR-II nuclide traps were placed directly into two specially designed 48-in. liners. The nuclide trap serves as the container for the waste sodium it contains. Double containment is provided for the MW by the jacket around the vessel and by additional metal welded around each of the nuclide traps.

The SLSF warm vapor trap is stored in its own special container. The container has a top section that is cylindrical, 12.25 in. ID by 7.25 in. high, and constructed of 0.25 in. type 304 stainless steel. The top section rests on an oval-shaped vessel that has a major axis of 12.25 in. ID and a minor axis of 7.00 in. ID. This vessel is also constructed of 0.25 in. type 304 stainless steel and is 24.13 in. high (interior dimension). The transition piece between the top and bottom sections was fabricated from 0.5 in. type 304 stainless steel.

The bottom section of the container holds the warm vapor trap and the top section holds the cover shield. The bottom section has an approximate volume of 3.76 ft3, which represents the waste containment volume of the vessel. The cover shield, which contains approximately 225 lbs of lead, provides radiation protection for personnel working in the RSWF. A second cover shield, which contains an additional 190 lbs of lead, is seal-welded on the top of the container, providing closure of the vessel.

In addition, containers containing thermocouple rods and other rods from the decommissioning of the EBR-I reactor are located in two original 16-in liners in the RSWF. No details are known about the containers within the original 16-in liner other than its steel construction and the use of lead, presumably as a shield plug. The two original 16 in liners have been relocated and placed into a catholically protected 24-in liner.

Originally five 30-in. liners were installed at RSWF as a contingency when the relocation of the original 16-in. liners into 24-in. liners occurred. If inspection of the 16-in. liners revealed evidence of corrosion that penetrated the entire wall thickness, then the 16-in. liners would be placed into a 24-in. liner and then into a 30-in. liner in order to have two levels of containment. These five liners were never used for contingency and are presently used for storage. Additional 30-in. liners allow for storage, relocating, and ease of accessing the 24-in. liners pending shipment. Concrete pads are utilized parallel to the 30-in. liners to enable access in mud and/or snow.

D-5(d)(3) Liner Radiation Shielding

The type of container shielding provided has varied over the history of RSWF. Shielding for most of the paint cans placed in the original 16-in. liners (now located in 24-in. liners) was provided by gravel. After the paint cans were placed into a liner, the liner was backfilled with gravel. This provided approximately 70 in. of gravel between the top of the paint can and the top of the liner. A 0.5-in. steel plate was then welded on the top of the liner to seal the containment.

Fabrication drawings of the various shield plug types are included in Attachment D-33. A summary of the shielding provided for the liners is listed below:

- Presently shielding for the 16-in liner is provided by a shield plug constructed of 30 in. of concrete and a 1/2-in. welded steel plate.

- The 24-in liners have either ½-in. steel plate welded shut or 6-in carbon steel shield plug welded shut. This shielding is based on the radiation reading.

- The 26-in liners have a 6-in carbon steel shield plug welded shut. Some of the original 26-in liners contain steel encased lead shield plugs welded shut.
- The 48-in liners have a carbon steel plate welded shut.
- The 60-in liners have ½ in. carbon steel plate welded shut.

D-5(d)(4) Cathodic Protection System

The liners are the final barrier between the MW container and the environment in the RSWF. The integrity of the liners provides assurance against the release and migration of MW into the soil, ground or surface water, or air. In order to ensure containment of the waste, each liner is protected against external corrosion by an impressed current cathodic protection system.

There are two basic mechanisms by which steel in contact with soil corrodes. One mechanism is called electrolytic corrosion. This corrosion results from stray direct current from an outside source picked up by metals in the soil. At the point where the current leaves the metal, corrosion occurs. This type of corrosion is not a consideration at the RSWF because of its remote location.

The second mechanism is called galvanic corrosion. This type of corrosion is self-generating. It arises from differences in electrical potential when metal is placed in the soil. The potential differences can develop from various nonuniformities including variation in soil properties. These nonuniformities can be variations in soil moisture, oxygen concentration, or soil resistivity. When an electrical potential develops, it provides the driving force for the flow of current. A flow of current from one structure to another will corrode the structure that acts as the anode.

The most effective method of protection against galvanic corrosion is called active or impressed current cathodic protection. It operates by passing direct current from impressed current anodes installed in the soil to the adjacent liners, which become cathodes. The liners in a given row are wired to one another and to the rectifiers on the ends of the row, making the liners the cathodes. Attachment D-34 contains the engineering drawing of the RSWF cathodic protection system. This drawing includes details of the cathodic protection system, including how the wires are welded to the liners. An illustration of the cathodic protection system is provided in in Attachment 1, Section B, MFC Facility Description. An external source of power is used to make the liner cathodic. The induced current ensures a current path from the replaceable sacrificial anodes to the liners (cathode) protecting the liner from galvanic corrosions. This type of protection is provided for all of the liners in the

RSWF. Additionally, further safeguarding of the liners from the corrosive effects of the surrounding soil is provided by a 4-in. layer of noncorrosive sand slurry backfilled into the annulus between the liner and the soil at the time of liner emplacement. This will effectively prevent the liners from directly contacting the soil, thereby minimizing liner corrosion.

The cathodic protection system for the RSWF was designed by independent qualified corrosion engineers, under subcontract to MFC. The design was completed under the supervision of a registered professional engineer.

The basis for the design was the result of field testing at the RSWF that was also performed by the independent corrosion engineer. This testing was performed to determine the resistivity of the soil in which the liners are buried. Ninety soil resistivity measurements were made at 5 average soil depths (2.5, 5.0, 7.5, 10.0, and 15.0 ft). These data were used to generate soil resistivity contour plots for each of the average soil depths.

The field testing also included cathodic protection design tests done on the existing 16-in. liners to determine the current required for protection. In order to provide a margin of safety, the design criterion used for protection was the current required to obtain a structure to soil potential of –1.00 volts. Engineering design margins add conservatism to the design to account for such things as variable soil conditions, specifying size (e.g., rectifier and wire sizing), and procuring system components.

The adequacy of the cathodic protection system was demonstrated from 1993 to 2001 through the use of 12 4½-in. corrosion surveillance tubes (now known as radiation monitoring tubes) that were inspected by nondestructive methods (i.e., ultrasonic examination, which is no longer required). The results of the wall thickness measurements from the corrosion surveillance tubes indicated that general corrosion is not occurring. This is supported in the 2001 Corrosion Assessment Report for the Cathodic Protection System of the RSWF, dated October 10, 2001, see Attachment D-35. In addition, a 16-in liner is pulled every 6 years for corrosion surveillance (every 4 years from 1997 to 2013). The liner pull examination includes a visual surface inspection and ultrasonic thickness measurements of the entire length of the liner every 1-in. at 45 degree intervals. The results of the liner pulls show that general corrosion is also not occurring. The overall conclusion is that the impressed current cathodic protection system and surrounding sand slurry are effectively protecting the liners from external corrosion. The cathodic protection system is operated and maintained to recommended industry standards.

The collected liner-to-soil potentials are reviewed by engineering to ascertain that each liner meets the cathodic protection action level of -0.85 volt and is therefore protected from corrosion. The liners to soil-potential reading are performed annually to identify wiring failures and to account for voltage potential changes as anodes are used up or as soil-moisture condition change. If a liner exhibits less than -0.85 volt potential (i.e., less negative than -0.85 volt) with respect to the soil, the rectifier output will be increased or necessary repairs made. A liner-to-soil potential greater [i.e., less negative] than -0.85 volts direct-current does not mean that the cathodic protection system is not operating, but does indicate that operational adjustments or preventative maintenance is required.

D-5(e) Site Air Conditions [IDAPA 58.01.05.08 and 012; 40 CFR 264.601(c)(4) and (5), 270.23 (b)]

The characteristics of the near-surface wind regime at the MFC can best be described using a graphical display called a wind rose. A wind rose is an effective method of showing joint wind speed and direction frequency distributions at a glance. The wind rose for MFC is provided in the INL HWMA/RCRA Permit Application, Volume 3 (General Information for INL Waste Management Units – DOE/ID-10131)]. The diagram indicates that winds are generally out of the southwest. The climate at MFC is semi-arid high dessert. Average annual precipitation is 8.00 inches (MFC data period spans 1994 through 2014). The maximum monthly precipitation occurred in June 2009 (4.51 inches). There were five months during the 20 year period between 1994 and 2014 with no precipitation. The average maximum monthly temperature is for July (88.3 degrees) and the average minimum monthly temperature is for January (6.7 degrees). Two to four 2-week or longer droughts occur during the July to November period. Two to three thunderstorm days occur during the summer months.

The RSWF consists of a fenced area used for subsurface storage of remote handled mixed waste. Sealed carbon-steel liners are buried vertically in the ground in bored holes such that the top of the liners protrude approximately 4 inches above ground. A 30 inch concrete or 6 inch steel shield plug is placed in the liner and the plug is welded to the top of the liner. There are no permanent buildings. Therefore high wind gusts, dust devils, wildfire winds, etc. have very little effect on the RSWF structures. The exposed portion of the liners (~4 inches) is inspected quarterly for cracks, severe corrosion, and deterioration.

D-5(f) Prevention of Air Emissions [IDAPA 58.01.05.08 and 012; 40 CFR 264.601(c)(2), 270.23(a)(2)]

A complete description of the INL site air conditions is provided in INL HWMA/RCRA Permit Application, Volume 3 (General Information for INL Waste Management Units – DOE/ID-10131)].

D-5(g) Operating Standards [IDAPA 58.01.05.08; 40 CFR 264.601(c)(3), 270.23(a)(2)]

This section describes how the RSWF will be operated to prevent any releases that may affect human health or the environment due to the migration of MW in the ground or surface water, soil, or air.

The operating instructions, requirements, and responsibilities for current operations at RSWF are included in operating procedures. The list of the procedures for general operations, waste placement and retrieval at RSWF, including a summary of these procedures is listed below:

RSWF-OI-001 (Storage Operations) provides operating instructions for waste placement or transfer of containers from HFEF or FCF to RSWF storage liners using the HFEF-5 and HFEF-14 casks.

RSWF-OI-002 (Retrieval of Material from 16-in and 26-in. liners) provides operating instructions for retrieval and transfer.

RSWF-OI-003 (Material Acceptance for Storage) specifies requirements and provides instructions for accepting mixed waste (MW), radioactive waste, and radioactive material (e.g., spent nuclear material, accountable material) for storage at RSWF.

RSWF-OI-004 (Administrative Requirements/Process for Material Transfers) describes the overall administrative requirements/process used by RSWF Management for approving material-transfer activities at the RSWF to ensure that proposed transfers are covered by safety documentation and receive the appropriate level of approval.

SD-57.1.1 (RSWF Administrative Requirements) is to document the various surveillance requirements associated with maintaining the overall integrity of RSWF. These requirements apply to the storage liners, the ground they are buried in, and the cathodic protection system. This procedure also addresses the activities, procedures, and documentation used to satisfy these requirements.

RSWF-OI-007 (Remote-Handled Waste Transfer) is used to transfer waste containers from RSWF liners via open-air transfer, to an Interim Storage Container (ISC) for removal from RSWF.

RSWF-OI-010 (Retrieval of Loaded Liners) provides instructions for retrieval of a previously-excavated loaded liner from RSWF free-air into a Facility Transfer Container (FTC) and preparing the loaded FTC for transport from RSWF.

RSWF-OI-011 (Retrieval of an SLSF Canister From A 26-IN. RSWF Liner) provides instructions for opening a RSWF liner, retrieving a Sodium Loop Safety Facility (SLSF) waste can from the RSWF liner, performing a free-air transfer of the SLSF to a Facility Transfer Container (FTC), and preparing the loaded FTC for transport from RSWF.

RSWF-OI-012 (Excavation of Loaded Liners) provides instructions for excavating a loaded liner at the RSWF and welding a lifting lug to the liner so that it can be retrieved per RSWF-OI-010, “Retrieval of Loaded Liners.”

RSWF-OI-016 (Preparing Liners for Retrieval and Transfer Operations at RSWF) provides instructions for opening of liners in preparation for retrieval and transfer.

D-5(g)(1) Inner Container Handling

Post 1978, the liners and inner container system are seal-welded closed. This effectively ensures that the inner container system is kept closed during storage. Because of the radioactivity associated with the MW, the inner container system will never be opened at RSWF, but would be transported to a hot cell for opening. During retrieval activities the weld around the top of the liner is removed to access the inside of the liner to allow the inner container system to be removed. A temporary seal is placed around where the weld was removed as a mitigation during inclement weather, if the inner container system is not removed the same day.

D-5(g)(2) Inner Container Transport

MW inner container systems are transported from other MFC facilities in a top-load, bottom discharge transport cask using a 25-ton forklift. To unload the cask, it is set on a shield ring that extends approximately 4 in. into the liner. A photograph showing this transport cask loaded on the forklift and positioned over a liner is provided in Attachment D-36.

The HFEF-5 and SLSF can inner container systems have a cable attached to its cover to allow the inner container system to be lowered into the liner. The upper end of this cable is attached to the bottom of the 30-in. concrete shield plug and left in place in the liner. The stored inner container system can be retrieved by removing the shield plug, securing the cable, and hoisting the container into a suitable cask. See Attachment 1, Section B, MFC Facility Description, Attachment B-8 for a diagram showing the lifting equipment, including the cable and shield plug lifting eye.

If a forklift fails during MW transfer, the cask could be transferred to a trailer and returned to the generating MFC facility. MFC also has backup cranes in the event of an equipment failure affecting a crane.

If a forklift or equipment failure occurs during MW transfer and results in a cask and/or inner container system drop, the inner container system, by design, is protected from damage and potential release of MW. The inner container system is designed to withstand the worst case drop scenario.

If an inner container system were actually dropped, it would be removed and returned to the generating MFC facility for repackaging. If it was unretrievable, it would be approximately centered in the liner and steel shot would be poured into the liner to provide shielding. The liner shield plug would be welded in place and the 16-in. liner would be pulled and placed in a 24-in. liner in accordance with an approved liner relocation procedure.

D-5(g)(3) Inner Container Loading and Damage Prevention

The MW is placed in the liners at RSWF using heavy equipment. The potential exists for damage to liners and the cathodic protection as a result of transfer operations. The potential for damage is minimized, however, by exercising preventive measures during normal facility operations. The facility is walked down after all transfer operations to ensure integrity of the systems.

The liners are protected from the heavy equipment by having the equipment straddle the liners into which the MW inner container system is being placed. Therefore, the equipment tires are several feet from the liner. In addition, all of the heavy equipment in the facility has sufficient clearance above the top of the liner. By procedure, if there is a concern about damaging a liner, prior to a MW transfer, the equipment operators load the transfer cask onto the transfer vehicle and drive the route to where the inner container system will be placed. Along the way, a second

operator inspects to ensure that the ground is stable and there are no obstructions. If problems are found, they would be remedied before the actual transfer takes place.

If a liner were an obstruction, for example, enough additional back-fill would be added and compacted around the liner to ensure adequate clearance.

Beginning in 1995, concrete pads were poured parallel to new liners installed in the E, F, and H rows (ref. Attachment D-31). These liners will be used when access to liners in other rows is hampered by mud and/or snow. The concrete will prevent damage to the liners and cathodic protection system.

The cathodic protection system cables are also protected by straddling the liner row. The only part of the cathodic protection system that is above ground, and, therefore vulnerable, is the CADweld™ or connection attaching the negative lead cable to the liner. To further protect the weld and to obtain a better weld, a metal tab is attached to the front of the liner. The only other components of the system that are above ground are located at the fenceline and away from heavy equipment paths.

The design of the cathodic protection system protects the underground wiring from the heavy equipment. The trenches in which the wiring is laid were initially backfilled with sand and then native soil, which is compacted with a tamper. In addition, the placement of the wire in the trench minimizes the potential for damage. The negative lead wire is run horizontally to liners at a depth of 2-3 ft. The wire is then run vertically directly up the front of the liner to the connection point. This design minimizes stress on the wire from heavy equipment driven over the site.

The liners are exposed to loadings from soil and adjacent traffic. The capacity of the liners to withstand these loadings and the effect of corrosion on this capacity was evaluated by an independent professional engineer. The stresses in the liner due to the applied loads, assuming the liner was structurally sound, were found to be very low. The stresses were estimated at 500 psi in bending and 40 psi in shear, which are much less than the accepted values for A53 steel of 24,000 psi for bending and 14,000 psi for shear (Association of Iron and Steel Engineers Manual, Section 1.5, Allowable Stresses). Even with a 90% metal loss due to corrosion, the liners would have sufficient strength to resist collapse resulting from soil loads.

D-5(g)(4) Liner Removal

Liners are removed from the ground per operating procedures by first locating and cutting the cathodic protection lead wire. The soil surrounding the entire length of the liner is then excavated using an auger and/or vacuum excavator. Lifting eyes or

another type of lifting device is then welded onto the liner to attach the rigging equipment.

D-5(h) Site Hydrogeologic Conditions [IDAPA 58.01.05.08 and 012; 40 CFR 264.601(a)(2),(3),(4), 264.601(b)(3),(5), 270.23(b)]

The RSWF is located in the Snake River Plain, which is a long, broad depression 300 miles long by up to 70 miles wide bordered on either side by mountains. RSWF is located on the eastern portion, which is a succession of basaltic lava flows of thicknesses from 10 to 100 feet interbedded with unconsolidated cinders, breccia and sediments. The total depth of the layered structure is at least 1500 ft. The ground surface of the area consists generally of composite layers of interbedded volcanic rock and sedimentary material, which includes alluvium, alluvial fan deposits, lakebed and playa deposits, and wind-blown deposits. This material varies in depths and is only a few feet deep covering bedrock in most areas. The sandy soils are characterized as having high ion-exchange characteristics. The principal ground water feature is the Snake River Plain aquifer, which is a continuous body of ground water underlying most of the eastern Snake River Plain. The aquifer consists of saturated basalt flows and sedimentary inter-beds. Most permeable zones appear to occur along the upper and lower edges of the basalt flows, which have large irregular fractures, fissures and voids. The depth to the aquifer is approximately 675 feet at the RSWF. Ground water in the unsaturated zone between the land surface and the aquifer seeps through the voids and cracks in and between layers of basalt and sedimentary material.

Twenty-nine test borings were made to depths ranging from 6 to 90 feet when the RSWF site was prepared as a storage facility. The results of the borings showed that an irregular lava surface lies between 8 and 23.5 feet below grade, with the shallow zone lying on the northwest edge of the fenced area. The average depth to lava is 15 feet. Ground water was not encountered in any of the exploratory borings.

The RSWF site is at an elevation of 5120 feet and 12 miles from the bed of the Big Lost River, which is at an elevation of 5042 feet. The Big Lost River is the closest surface water source to the RSWF. The flow of water in the Big Lost River is intermittent and associated with spring run-off. Because of the distance, elevation differences, and size of the Big Lost River, the RSWF is not considered to have any potential impact on the water quality of the Big Lost River.

The RSWF area is elevated several feet above the surrounding land surface. The elevation slopes off from 5120 feet in the center of the facility to 5117 feet at the fence line. The surrounding land within 300 feet of the facility is at a lower

elevation than the fence line. Furthermore, prior to placing the liners in the RSWF storage area, several feet of gravel and soil were placed over the storage area and graded to slope gently from the centerline to the parallel sides, which were banked with gravel. This grade promotes run-off, reduces percolation in the area of the RSWF, and also serves to prevent run-on into the area.

In June 1989, an independent corrosion engineering firm (CH2M Hill, Boise, ID) performed soil corrosion mapping of the RSWF. The electrical resistivity of the soil was measured by the Wenner four pin method. The tests consisted of 90 soil resistivity measurements at average depths of 2.5, 5.0, 7.5, 10.0, and 15.0 feet. Both average and layer resistivity calculations were made from these measurements. In general, the RSWF soil ranges from mildly to moderately corrosive based on the ranking defined by the US Bureau of Standards, see Table D-10. This corresponds to a corrosion rate of 0.021 to 0.061 inches/year.

Table D-10. Corrosion rates of steel in soil and soil corrosion classes.

Corrosion Class	Soil Resistivity (Ω/cm)	Corrosion Rate (inches/year)
Noncorrosive	>10,000	0.005
Mildly Corrosive	2,000 to10,000	0.021
Moderately Corrosive	1,000 to 2,000	0.061
Corrosive	500 to 1,000	0.10
Very Corrosive	<500	0.137
From M. Romanoff, Underground Corrosion, Circ. 579. National Bureau of Standards (U.S.) 1957.		

D-5(i) Site Precipitation [IDAPA 58.01.05.08; 40 CFR 264.601(b)(4)]

A complete description of the INL site precipitation is provided in the INL HWMA/RCRA Permit Application, Volume 3 (General Information for INL Waste Management Units – DOE/ID-10131)].

D-5(j) Ground-Water Usage [IDAPA 58.01.05.08; 40 CFR 264.601(a)(5)]

A complete description of the INL ground-water usage is provided in the INL HWMA/RCRA Permit Application, Volume 3 (General Information for INL Waste Management Units – DOE/ID-10131)].

D-5(k) Surface Waters [IDAPA 58.01.05.08; 40 CFR 264.601(b)(6),(7)]

A complete description of the INL surface waters is provided in the INL HWMA/RCRA Permit Application, Volume 3 (General Information for INL Waste Management Units – DOE/ID-10131)].

D-5(l) Area Land Use [IDAPA 58.01.05.08 and 012; 40 CFR 264.601(a)(6), 264.601(b)(9), 270.23(b)]

A complete description of the INL site area land use is provided in the INL HWMA/RCRA Permit Application, Volume 3 (General Information for INL Waste Management Units – DOE/ID-10131)].

D-5(m) Migration of Waste Constituents [IDAPA 58.01.05.08; 40 CFR 264.601(a)(7)]

The sequence of events that could lead to a release of hazardous constituents to the soil start with a failure of the liner. The failure of a liner could proceed by spot corrosion leading to a pinhole penetration in the short-term or general corrosion resulting in liner collapse in the long-term scenario. Liner failure could also result from a loss of the integrity of the weld between the bottom plate and the liner pipe. The liner breach then requires that water leak into the liner through the penetration corroding the waste container resulting in a water Na/NaK reaction or a slow release of TC constituents out of the liner.

During the spring months or after a period of heavy rain, the soil around a liner could become saturated with water. If water were to leak into the liner, corrosion of the waste container could then occur. In the case of previously single contained waste, this would be corrosion of the former 16 in. liner. In the case of doubly contained waste, this would be corrosion of the outer waste container. However, the stainless steel waste containers used since 1978, are corrosion resistant because of their chromium content. Therefore, penetration of the former 16 in. liners and inner waste containers of pre-1978 waste packages is much more credible.

After many years, additional corrosion to the 16 in. liner could penetrate this layer of containment. This would allow the penetration of water to the exterior of the final waste containment barrier. After corrosion and penetration of the final level of containment, water could reach sodium or NaK.

The products of the sodium-water reaction are sodium hydroxide (NaOH) and hydrogen (H2). Similarly, the products of the NaK-water reaction are NaOH, potassium hydroxide (KOH), and H2. Depending on the amount and geometry of sodium in the waste container, H2 generation could be significant and perhaps a

flammable mixture of H2 and O2 could result. The production of a flammable mixture would depend on the formation of a water seal and the liner penetration being at the bottom of the liner. A water seal could form if the soil were saturated with water. This would allow the H2 to collect at the top of the liner. If a water seal did not form, the hydrogen would diffuse back through the penetration in a matter of days. If the geometry of the sodium and availability of water were such that the reaction proceeded rapidly, sufficient heat could be generated to ignite the sodium (250°F ignition temperature). If the sodium were to react and combust, the H2 could also ignite (1100°F ignition temperature). The ignition of the H2 could result in a small explosion that is limited by the availability of O2. The quantity of O2 available is limited because the waste containers were loaded and sealed in the inert (argon) atmosphere of the MFC hot cells.

In the worst case, an explosion resulting from ignition of hydrogen gas in the liner could rupture the liner and forcibly disperse hazardous and radioactive material into the surrounding soil or into the air. If the rupture and dispersion were limited to the soil, it would be dispersed only a short distance from the liner. However, migration of the constituents could then proceed. The dispersion through the air could be much more widespread and could potentially reach the MFC site. However, because of the remote location of the RSWF it is highly unlikely that the contamination would reach populated areas.

Without the forced rupture of a container due to an explosion of hydrogen gas, the release and migration of radioactive or hazardous waste constituents would be limited to the soil, which would proceed very slowly. All of the waste constituents of concern exist as solids. Even the NaK in the RSWF would be converted to a solid upon reacting with soil-water. Sodium or NaK migrating from a liner would spontaneously react with soil moisture, oxygen, and carbon dioxide to deactivate the reactivity characteristic and form nonhazardous substances (NaOH, KOH, NaO_2, $NaCO_3$, etc.).

The formation and ignition of a flammable H2-O2 mixture is a highly improbable event whose occurrence depends on a sequence of improbable events. First, the ground water level must rise above the elevation of a leak in the liner and be maintained while the sodium-water reaction occurs. If the water level should drop below the elevation of the hole, the H2 would escape harmlessly into the environment. The ground water level at the RSWF has never been observed in the range of depths that a liner occupies (0-13 feet). The second improbable event is the ignition of a flammable mixture. In order for an 1100°F source to occur as the result of sodium combustion, the heat would have to be maintained. Since the sodium at

the RSWF is associated with and in contact with metal parts, the heat would more likely be conducted away by the metal and dissipated. Other potential ignition sources such as electrical discharges and volcanic activity are so improbable that they may be disregarded.

Another potential cause of a release is equipment failure leading to dropping a waste container during waste transfer operations. An equipment failure during waste transfer resulting in a container being dropped, is mitigated by the container design. The container is designed to withstand the worst case drop scenario. The worst case drop is defined as the longest possible drop of a waste container. This event could occur with a waste container in its fully lifted position in the cask in place over a liner. A failure of the hoisting equipment or tackle at that stage would result in a maximum vertical drop of 13 ft (12 ft liner depth, plus 1 ft cask clearance). A drop test on a fully loaded waste containment package was performed to demonstrate the ability to survive the 13 ft drop. In the test a waste package containing 600 lbs of simulated waste material was dropped into an existing empty liner at the RSWF. The acceptance criteria for the test was maintenance of the integrity of at least one level of containment as verified by a pressure leak test.

The outer waste container survived the drop test maintaining at least one level of containment. The inner container received minor damage, but a portion of the weld on the bottom plate failed and slight deformation occurred. The diameter of the outer container was maintained; therefore, the package could be retrieved from the liner. The 16 in. liner also survived the test without structural damage.

If a drop were to actually occur into a liner, the container would be removed and returned to a hot cell for repackaging. A Contingency Plan is also available in the unlikely event that a waste containment package was so damaged that it could not be retrieved. The package would be approximately centered in the liner and steel shot would be dumped in the liner to provide shielding. The liner shield plug would be welded in place and the 16 in. liner would be pulled and placed in a 24 in. liner per the liner relocation procedure.

There are many features engineered into the RSWF design to prevent releases that may affect human health or the environment due to the migration of MW in the ground water, soil or air. These features include the following:

— Impressed current cathodic protection for liners

— Protective 4-in. layer of noncorrosive sand slurry between the liners and the surrounding soil

- Multiple containment layers for MW[5]
- Quality assurance of liners (pressure testing, inspection, installation inspection, etc.)
- Arid climate
- Facility elevation with respect to surrounding surface and ground-water sources.
- Site geology
- Remote location.

An important feature is the cathodic protection system. A properly designed and operated impressed current cathodic protection system virtually eliminates liner corrosion by soils surrounding the liners. The proper operation of the system is ensured by regular inspection and a preventative maintenance corrosion monitoring program. With liner corrosion eliminated, almost all credible release scenarios are eliminated. As long as the liner integrity is maintained, it is a formidable barrier against the release of material to the soil or air.

Additional assurances against releases are provided by the protective layer of noncorrosive sand backfill surrounding the liners and the integrity of the inner container and liners used to store the MW.

While the cathodic protection system is designed to protect the liners, it is possible that residual moisture or soil encrustation on the inner containers could create corrosion on the internal wall of the liner. The environment within the liner provides a finite source of corrosive media, is less diverse, and, therefore, corrosive processes are more predictable than those occurring on the outside of the liner. Corrosion/pitting predictions based upon S. F. Mughabghab and T. M. Sullivan, "Evaluation of the Pitting Corrosion of Carbon Steels and Other Ferrous Metals in Soil Systems," Waste Management, 9, pp. 239-251, 1989, indicate no penetration for at least 50 years. This event can result in a detectable level of hydrogen in the

[5]. From 1965 to 1978, the MW was placed into a paint can which was placed into an original 16-in. liner. The 16-in. liners were relocated and placed into new cathodically protected 24-in. liners. The viability/integrity of this containment varies depending on the contents of each of these levels of containment. Post 1978, the MW was placed into an inner HFEF-5 can or SLSF can, which was placed into an outer HFEF-5 can or SLSF can, and then the double container was placed into a new cathodically protected 16-in. or 26-in. liner.

liner. As such liner atmosphere is tested and purged as necessary before opening the liner for waste removal.

The climate and elevation of the facility are mitigating features against a release migrating off-Site. The RSWF climate is semi-arid high desert with a low average annual rainfall (about 8 in.). The RSWF site is at an elevation of 5120 ft and 12 miles from the bed of the Big Lost River, which is at an elevation of 5042 ft. The Big Lost River is the closest surface-water source to the RSWF. The area is also on relatively high ground. The elevation slopes off from 5120 ft in the center of the facility to 5117 ft at the fenceline. The surrounding land within 300 ft of the facility is at a lower elevation than the fenceline (ref. drawing in Attachment D-30). In addition, a facility drainage system, consisting of drainage culverts located on the north, east, and west sides of the facility, and at specific locations within the facility, provides for general runoff and diversion of surface water from the facility to the surrounding desert. These features serve to isolate the facility from major sources of surface water.

The primary available sources of water are precipitation and ponding from rapid snow-melt, which are both intermittent and limited due to the climate. The RSWF cathodic protection system was designed and has proven to adequately protect the liners from corrosion for the RSWF soil and surface water conditions. Saturating the soil environment in fact increases the effectiveness of the impressed current cathodic protection system. Additionally, pooling of water at the surface of the liners also provides for the transfer of cathodic protection current to the exposed steel (Ref. Attachment D-30 for a discussion of the impact of saturated soil conditions on the cathodic protection system by the corrosion expert who is very familiar with the RSWF). The primary driving force for MW migration is percolation of soil-water through the unsaturated zone. Percolation is minimized by the slope of the RSWF, which promotes run off. Therefore, even if an undetected release were to occur, the migration of hazardous constituents to off-Site locations or into water supplies during the life of the facility is unlikely.

The soil of the INL is typically high in clay and silt content. As a result, the soil has a very low vertical hydraulic conductivity, approximately 0.01 ft/day, which should retard the downward migration of potential vapor or liquid contaminants. In addition, the clay may retard the migration of radionuclides and metals through adsorption. Because the RSWF is approximately 675 ft above the water table and is higher in elevation than potential surface-water sources, it is well isolated from major sources of water. Therefore, the migration of hazardous constituents to off-

Site locations for incorporation into the root zone of crops and other vegetation or into water supplies during the life of the facility is highly improbable.

D-5(n) Evaluation of Risk to Human Health and the Environment [IDAPA 58.01.05.08; 40 CFR 264.601(a)(8), (9), 264.601(b)(10), (11), 264.601(c)(6), (7)]

There are many features engineered into the RSWF design to prevent releases of MW that may affect human health or the environment due to the migration of MW in the ground water, soil, or air. The geology, topography, and climate of the site and the engineering design of the facility combine to minimize the risk to human health and the environment from the hazardous constituents stored there. In addition, a comprehensive inspection and monitoring program is used to ensure that the waste is being adequately protected (ref. Attachment 4, Section F, Inspections).

An important mitigation against a loss of integrity of the RSWF MW liner is cathodic protection. Cathodic protection is the most effective available means of protecting steel in contact with soil from the effects of galvanic corrosion. A properly designed and operated impressed current cathodic protection system virtually eliminates external liner corrosion.[6] Galvanic corrosion is further minimized at the RSWF by completely surrounding the liners with noncorrosive sand at the time of emplacement. With corrosion on the liner exterior eliminated, credible release is virtually eliminated. As long as the liner integrity is maintained, it is an effective barrier against the release of material to the ground water, soil, or air.

The RSWF cathodic protection system was designed by corrosion engineers under the supervision of a State of Idaho-registered professional engineer. The corrosion engineers also provided the proper operating parameters for the system to provide maximum protection.

Cathodic protection is a well developed technology for which an extensive amount of operating experience and operating standards exists. The proper design, operation, and maintenance of cathodic protection systems has been documented by the National Association of Corrosion Engineers in a Recommended Practice (National Association of Corrosion Engineers Standard RP-02-85, Item No. 53056). The RSWF cathodic protection system conforms with all of the recommendations of this standard and the recommendations of the independent designers.

[6]. Uhlig, H.H., Corrosion and Corrosion Control: An introduction to Corrosion Science, 3rd Edition, 1985, John Wiley & Sons, inc., p. 217.

The proper operation of the cathodic protection system is assured through a monitoring or preventative maintenance and inspection program. The inspections will ensure that the cathodic protection system is operating and the monitoring or preventative maintenance will evaluate the effectiveness of the system. The inspection and preventative maintenance schedule and methods were developed based on the recommendations of the NACE Standard, IDAPA 58.01.05.08; 40 CFR 264 tank regulations, and the recommendations of the system designers. The monitoring program was devised to detect any potential inadequacies in the facility design that could lead to a loss of waste containment.

The integrity of liners is built in and verified prior to being placed in service through inspections and a pressure test. The liners are manufactured in accordance with site fabrication drawings. The liner is hydrostatically tested and failed liners are repaired and retested. After an inner container system is placed in the liner, the cover is welded closed. Quarterly the exposed portions of the liners are visually inspected for cracks, corrosion and deterioration. However, snow conditions may render some or all liners unavailable for inspection.

In order to provide additional assurances against a release since 1978, the MW is contained within multiple layers of confinement within the liner. By providing multiple layers of confinement between the MW and ground water, soil, or air, the probability of a release is very low.

The climate and elevation of the facility are also mitigating features. The RSWF climate is semi-arid high desert. Average annual rainfall is about 8 in. at the Central Facilities Area of the INL with about 50% falling as snow. The RSWF site is at an elevation of 5120 ft and 12 miles from the bed of the Big Lost River, which is at an elevation of 5042 ft. The Big Lost River is the closest surface water source to the RSWF. The area is also on relatively high ground. The elevation slopes off from 5120 ft in the center of the facility to 5117 ft at the fenceline. The surrounding land within 300 ft of the facility is at a lower elevation than the fenceline.

Because the RSWF is higher in elevation than potential surface-water sources and is higher than the surrounding terrain, it is isolated from major sources of water. The primary available sources of soil-water are precipitation and ponding from rapid snowmelt, which are both intermittent and limited due to the climate. The primary driving force for contaminant migration is percolation of soil-water through the unsaturated zone. Therefore, even if an undetected release were to occur, the migration of hazardous constituents to off-Site locations or into water supplies where human health would be at risk is unlikely.

The principal ground-water feature of the INL is the Snake River Plain Aquifer, which is a continuous body of ground water underlying most of the eastern Snake River Plain. The aquifer is an important source of water to the State of Idaho and contamination of the aquifer by RSWF waste constituents would pose a risk to human health. However, the depth to the aquifer is approximately 675 ft at the RSWF. The risk to human health and the environment from contaminating the aquifer is very small because of the following factors:

- Depth to the aquifer
- Limited supply of water for transporting waste constituents
- Quantity of MW in an individual liner
- Large volume of the aquifer
- Engineering barriers to a release.

The risk to human health and the potential for damage to domestic animals, wildlife, and crops is also minimized by the remote location of the facility. The RSWF is located on the INL, which is described in detail in the INL HWMA/RCRA Permit Application, Volume 3 (General Information for INL Waste Management Units – DOE/ID-10131)]. The INL boundaries extend for approximately 39 miles (north to south) and 36 miles (east to west). Approximately 95% of the area has been withdrawn from the public domain with the remaining 5% controlled by the DOE. The population density within 20 miles of the RSWF in any direction is less than 10 persons/square mile.

Attachment D-1

HWMA Unit Miscellaneous Containers

HFEF 5-Can (inner and outer waste can) and Sodium Disposal Container

Various Containers (e.g., drums, cold traps, boxes)

Attachment D-2

HWMA Unit Container Labeling

HAZARDOUS WASTE

FEDERAL LAWS PROHIBIT IMPROPER DISPOSAL.

IF FOUND, CONTACT THE NEAREST POLICE OR PUBLIC SAFETY AUTHORITY, OR THE U.S. ENVIRONMENTAL PROTECTION AGENCY.

GENERATOR INFORMATION:

NAME _____

ADDRESS _____

CITY _____ STATE _____ ZIP _____

EPA ID NO. _____ EPA WASTE NO. _____

ACCUMULATION START DATE _____ MANIFEST TRACKING NO. _____

[_____]

D.O.T. PROPER SHIPPING NAME AND UN OR NA NO. WITH PREFIX

HANDLE WITH CARE!

Integrated Waste Tracking System

MFC110084

Duplicate Label

Print Date: 03/21/2012

Integrated Waste Tracking System

CAUTION RADIOACTIVE MATERIAL

LOADED-EMPTY

REMARKS _____

_____ mR/hr CONTACT

_____ mR/hr @ 1 METER

_____ d/min/100 Cm² $\beta\gamma$

_____ d/min/100 Cm² α

PRINCIPAL ISOTOPES _____

DATE _____ SIGNATURE _____

CAUTION: RADIOACTIVE MATERIAL

DESCRIPTION OF ITEM:

Contact Radiaton Levels _____ mrem/hr

Removable Surface Contamination Levels

Beta/Gamma _____ dpm/100cm² Alpha _____ dpm/100cm²

Date _____ RCT _____

HAZARD CONTENT

Ignitable

Corrosive

Reactive

Toxic

Attachment D-3

Example of Hazardous Waste Acceptance Checklists

TSD FACILITIES MATERIAL ACCEPTANCE CHECKSHEET
PERMIT RELATED

SECTION 1 — GENERATOR-SUPPLIED INFORMATION

General			
TSDF Staff Specialist/TSDF SS:		**Date:**	
Transferring facility:			
Receiving facility:	Radiological Facility		
	❑ NFA ❑ ORSA ❑ SCMS ❑ SSB ❑ RVP		
Process knowledge contact:			

Waste/Material			
Source:			
Type:	❑ MW ❑ HW ❑ LLW ❑ TRU ❑ MTRU ❑ Radioactive Material		
List EPA Hazardous Waste codes:			
If applicable, identify Hazards Contents (e.g. Ignitable, Reactive, Toxic, Corrosive)			
Container net volume (units):		Container gross volume (units):	
Description of characterization method:			

Container			
Physical description:			
Content description:			
Radiation levels:	at 1 in.		at 1 meter
Barcode No.(s):			
Container net weight (lb):		Container gross weight (lb):	
Container properly labeled:	❑ Yes ❑ No		
Fissionable-material quantity (g):		DOE-Standard-1027 sum of the fractions per MCP-1989:	_____or ❑ NC-DM Attach Form-381
Proposed transfer is less than HC-3 thresholds:		❑ Yes ❑ No	
Signature:		**Date:**	

SECTION 2 — RECEIVING FACILITY REVIEW AND APPROVAL

General		
Storage facility:	❑ NFA ❑ ORSA ❑ SSB ❑ SCMS (❑ 793 ❑ 793-C ❑ 793-G) ❑ RVP	
Will this transfer cause the mixed hazardous waste storage volume(s) to be exceeded?	❑ Yes ❑ No ❑ N/A	SSB: 48,000 gal SCMS – (specific areas): High Bay Area: 5,280 gal 793C: 14,080 gal Low Bay Area: 1,760 gal 793G: 3,520 gal NFA: 333m^3 (88,000 gal)

Verify EPA Hazardous waste codes written above by the generator are the same EPA Hazardous waste codes identified in the IWTS profile(s) provided by the generator or on the containers, and that the EPA Hazardous waste codes meet the acceptable EPA Hazardous waste codes documented below for the receiving facility.

TSDF Staff Specialist/TSDF SS:		**Date:**	

TSD FACILITIES MATERIAL ACCEPTANCE CHECKSHEET
PERMIT RELATED

Processes Performed:	Facility	Allowable EPA Hazardous Waste Codes
Container Storage (S01)	SCMS	Ignitable waste: D001 Corrosive waste: D002 Reactive waste: D003 Toxic-metal waste: D004 – D011 Organic chemicals: D018-D019, D021-D022, D026-D030, D032-D040, D042-D043 Spent solvents: F001- F005 Heavy metal and cyanide waste: F006 - F009 Commercial Chemical Products: P030, P098, P099, P106, U003, U103, U108, U134, U151
Container Storage (S01)	SSB	Ignitable waste: D001 Reactive waste: D003 Toxic-metal waste: D004 – D011 Organic chemicals: D012, D018, D019, D021-D022, D026-D030, D032-D040, D042-D043 Spent solvents: F001- F005 Heavy metal and cyanide waste: F006 - F009 Commercial Chemical Products: P030, P098, P099, P106, U003, U103, U108, U134, U151
Container Storage (S01) (No free liquids. Solids and debris only)	North Fenced Area	Ignitable waste: D001 Reactive waste: D003 Toxic-metal waste: D004 – D011 Organic chemicals: D012, D018, D019, D021-D022, D026-D030, D032-D040, D042-D043 Spent solvents: F001- F005 Heavy metal and cyanide waste: F006 - F009 Commercial Chemical Products: P030, P098, P099, P106, U003, U103, U108, U134, U151

Facility permitted to store/treat waste/material:	❑ Yes ❑ No	Storage duration:	
Waste/material receipt:	❑ Container ❑ Shipment	If shipment, number of containers:	
Material profile No.:		IWTS Shipment Task Number:	

Characterization

Waste-characterization data has been reviewed; adequate characterization has been performed and the data is complete, accurate, and sufficient to justify approval of the waste for acceptance at the receiving facility.

TSDF Staff Specialist/TSDF SS:		**Date:**	

Calculations and Verifications

Hazard-Category Radionuclide Threshold Quantities and Sum of the Fractions

Current Sum	Projected Total	Total Exceeds 0.8[1]
		❑ Yes ❑ No

Fissionable-Material Threshold Quantities

Current Inventory (g)	Projected Total (g)	Inventory Limit Exceeded[2]
		❑ Yes ❑ No

Receipt of the proposed transfer will not cause the receiving facility to meet or exceed applicable fissionable-material threshold quantities or hazard-category radionuclide threshold quantities and sum of the fractions.

TSDF Staff Specialist/TSDF SS:		**Date:**	

TSD FACILITIES MATERIAL ACCEPTANCE CHECKSHEET
PERMIT RELATED

The material/waste to be stored in ORSA or the NFA complies with the requirements of the criticality safety controls, and is approved for transfer from a criticality standpoint.				
ORSA/NFA CSO:		**Date:**		❑ N/A
For a proposed transfer that exceeds de minimis levels, waste-characterization data has been reviewed; it is in compliance with applicable nuclear and environmental regulations and is acceptable for storage or treatment at the receiving facility.				
Peer Reviewer:		**Date:**		❑ N/A
Transfer Approval				
The proposed transfer is approved for receipt at the designated facility.				
TSDF Facilities Manager:			**Date:**	
SECTION 3 — WASTE/MATERIAL RECEIPT				
Is the hazard classification of the contents identified on the container?		❑ Yes	❑ No	❑ N/A
FRM-378, "All Container Storage Facilities Daily Container," Inspection Form has been completed.		❑ Yes	❑ No	❑ N/A
TSDF Shift Supervisor:			**Date:**	
Following completion of the IWTS Ship Task or Process Task, verify the IWTS Container Profile has been updated to reflect the new container location.				
TSDF Staff Specialist:			**Date:**	
Transfer Comments[3]:				

1. The waste/material cannot be accepted if the proposed transfer will cause the applicable facility hazard-category radionuclide threshold quantities or sum of the fractions to be met or exceeded.
2. Fissionable material in ORSA or the NFA is limited to 700 g Moderated Fissionable Equivalent (MFE). Total fissionable material in SCMS or the SSB is limited to 250 g and 15 g for the RVP. For those containers or packages which are considered de minimis under MCP-1989, the <1 g requirement for fissionable material shall not be applied to the NFA or ORSA CCAs. Fissionable material in de minimis packages shall be accounted for and tracked while in the CCA.
3. Comments related to the waste or material transfer shall be documented. As an example, for mixed waste not requiring a hazard classification label, document why it is not required.

HFEF WASTE ACCEPTANCE CRITERIA
TSR RELATED

SECTION I – GENERATOR WASTE MATERIAL DESCRIPTION AND INFORMATION					
Generator or Originating Facility:		Technical Contact Name:		Date:	
Description of characterization method:					
Material and Waste Characterization Information — Generators Material and Container Profile Information (IWTS Profile(s) or equivalent):				❑ Yes ❑ No	
Material profile number or equivalent:					
EPA hazardous waste codes:					
Barcode No(s):					
Content description:					
Container net weight (lb):		Container gross weight (lb):			
Signature:				**Date:**	

SECTION II – HFEF REVIEW AND APPROVAL			
Verify EPA hazardous waste codes written down above by generator are the same EPA hazardous waste codes identified in the IWTS profile(s) or equivalent provided by the generator and that the EPA hazardous waste codes meet acceptable EPA hazardous waste codes for HFEF documented below.			
HFEF Staff Specialist or Designee:		**Date:**	

HFEF Acceptable EPA Hazardous Waste Numbers

Characteristic Waste							F-Listed Waste	P-Listed Waste		U-Listed Waste					
D001	D002	D003	D004	D014	D024	D034	F001	P005	P077	U003	U052	U120	U145	U196	U225
			D005	D015	D025	D035	F002	P012	P098	U004	U069	U122	U147	U201	U226
			D006	D016	D026	D036	F003	P022	P104	U007	U079	U123	U151	U204	U227
			D007	D017	D027	D037	F004	P024	P105	U009	U080	U127	U159	U207	U228
			D008	D018	D028	D038	F005	P027	P106	U012	U081	U128	U162	U208	U239
			D009	D019	D029	D039	F006	P028	P113	U014	U083	U131	U165	U210	U328
			D010	D020	D030	D040	F007	P030	P116	U019	U084	U133	U170	U211	
			D011	D021	D031	D041	F008	P031	P119	U020	U102	U134	U171	U215	
			D012	D022	D032	D042	F009	P056	P120	U032	U103	U135	U182	U217	
			D013	D023	D033	D043	F039	P073		U037	U108	U138	U188	U218	
										U044	U116	U140	U190	U219	
										U048	U118	U144	U191	U220	

HWMA unit receipt area:	❑ HBA ❑ HRA ❑ Decon Cell ❑ Prep Room ❑ Transfer Room				
Verify hazardous waste storage volume(s) do not exceed the limits for the following areas:	HBA – 5,500 gal; HRA – 880 gal; Decon Cell – 385 gal; Prep Room – 3,520 gal, Transfer Room – 440 gal				
Verify hazard classification contents is identified on the container (i.e., ignitable, toxic, corrosive, reactive)?				❑ Yes ❑ No ❑ N/A	
Applicable steps in Section 3 of FRM-2096, "Hot Fuel Examination Facility Waste Acceptance Checklist," are complete? **(LCO/SAC 3.405.1)**				❑ Yes ❑ No	
Waste characterization data has been reviewed and data is complete, accurate, and sufficient to accept waste at HFEF.					
HFEF Staff Specialist or Designee:		**Date:**			
Facility Manager or Designee:		**Date:**			

Attachment D-4

Manufacturer Information

MATERIAL SAFETY DATA SHEET

Date Prepared: 07/03/13

I. PRODUCT IDENTIFICATION

Trade Name(s): **Aquaset**

Generic Name(s): Bentonite Clay (CAS No. 1302-78-9)

Chemical Name(s): Sodium Montmorillonite (CAS No. 1318-93-0)

Manufacturer: Fluid Tech LLC
Address: 130 N. 12th St
Montpelier, ID 83254

Telephone Numbers:
Information: (800) 995 - 5691
Emergency: (865) 809 - 9995

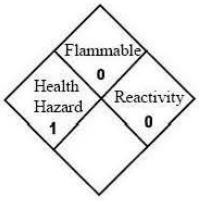

NFPA FIRE HAZARD IDENTIFICATION SYSTEM

II. HAZARDOUS INGREDIENTS

Ingredient	CAS NO.	%	Hazard
Crystalline Silica (SiO_2) as Quartz	14808-60-7	See Note	Low concentrations of crystalline silica (SiO_2) in the form of quartz may be present in airborne bentonite dust. See Section VI for discussion of health hazard.

Note: Although the typical quartz content of bentonite is in the range of 2 to 6% most of the quartz particles are larger than the 10 µ respirable threshold size. The actual respirable quartz concentration in airborne bentonite dust will depend upon bentonite source, fineness of product, moisture content of product, local humidity and wind condition at point of use and other use specific factors.

III. PHYSICAL DATA

Boiling Point (°F): NA	Specific Gravity (H_2O=1): 2.45-2.55
Vapor Pressure (mm. Hg): NA	Melting Point: Approx. 1450°C
Vapor Density (Air = 1): NA	Evaporation Rate (Butyl Acetate = 1): NA
Solubility in Water: Insoluble, forms colloidal suspension.	pH: 8-10 (5% aqueous suspension)
Density (at 20° C): 55-68 lbs./cu.ft. as product.	

Appearance and Odor: Light tan to gray dry granules. No odor.

IV. FIRE AND EXPLOSION DATA

Flash Point: NA	Flammable Limits: LEL: NA UEL: NA

Special Fire Fighting Procedures: NA

Unusual Fire and Explosion Hazards: None. Product will not support combustion.

Extinguishing Media: None for product. Any media can be used for the packaging. Product becomes slippery when wet.

V. REACTIVITY

Stability: Stable

Hazardous Polymerization: None

Incompatibility: None

Hazardous Decomposition Products: None

NA = Not Applicable ND = Not Determined

VI. HEALTH HAZARD INFORMATION

Routes of Exposure and Effects:
Skin: Possible drying resulting in dermatitis.
Eyes: Mechanical irritant.
Inhalation: *Acute* (short term) exposure to dust levels exceeding the PEL may cause irritation of respiratory tract resulting in a dry cough. *Chronic* (long term) exposure to airborne bentonite dust containing respirable size (≤ 10 μm) quartz particles, where respirable quartz particle levels are higher than TLV's, may lead to development of silicosis or other respiratory problems. Persistent dry cough and labored breathing upon exertion may be symptomatic.
Ingestion: No adverse effects.

Permissible Exposure Limits: (for air contaminants)	OSHA PEL (8hr. TWA)	ACGIH TLV
Bentonite as "Particulates not otherwise regulated" (formerly nuisance dust)		
Total dust	15 mg/m^3	ND
Respirable dust	5 mg/m^3	ND
Crystalline Silica: Quartz (respirable)	$\frac{10\ mg/m^3}{\%\ Silica + 2}$	0.025 mg/m^3

Carcinogenicity: Bentonite is not listed by ACGIH, IARC, NTP or OSHA. IARC, 1997, concludes that there is sufficient evidence in humans for the carcinogenicity of inhaled crystalline silica from occupational sources (IARC Class 1), that carcinogenicity was not detected in all industrial circumstances studied and that carcinogenicity may depend on characteristics of the crystalline silica or on external factors affecting its biological activity. NTP classifies respirable crystalline silica as "known to be a human carcinogen" (NTP 9th Report on Carcinogens – 2000). ACGIH classifies crystalline silica, quartz, as a suspected human carcinogen (A2).

Acute Oral LD_{50}: ND	Acute Dermal LD_{50}: ND	Aquatic Toxicology LC_{50}: ND

Emergency and First Aid Procedures:
Skin: Wash with soap and water until clean.
Eyes: Flush with water until irritation ceases.
Inhalation: Move to area free from dust. If symptoms of irritation persist contact physician. Inhalation may aggravate existing respiratory illness.

VII. HANDLING AND USE PRECAUTIONS

Steps to be Taken if Material is Released or Spilled: Avoid breathing dust; wear respirator approved for silica bearing dust. Vacuum up to avoid generating airborne dust. Avoid using water. Product slippery when wetted.

Waste Disposal Methods: Product should be disposed of in accordance with applicable local, state and federal regulations.

Handling and Storage Precautions: Use NIOSH/MSHA respirators approved for silica bearing dust when free silica containing airborne bentonite dust levels exceed PEL/TLV's. Clean up spills promptly to avoid making dust. Storage area floors may become slippery if wetted.

VIII. INDUSTRIAL HYGIENE CONTROL MEASURES

Ventilation Requirements: Mechanical, general room ventilation. Use local ventilation to maintain PEL's/TLV's.

Respirator: Use respirators approved by NIOSH/MSHA for silica bearing dust.

Eye Protection: Generally not necessary. Personal preference.

Gloves: Generally not necessary. Personal preference.

Other Protective Clothing or Equipment: None

IX. SPECIAL PRECAUTIONS

Avoid prolonged inhalation of airborne dust.

DEPARTMENT OF TRANSPORTATION HAZARDOUS MATERIAL INFORMATION

Shipping Name: NA (Not Regulated)	Hazard Class: NA
Hazardous Substance: NA	Caution Labeling: NA

All information presented herein is believed to be accurate; however, it is the user's responsibility to determine in advance of need that the information is current and suitable for their circumstances. No warranty or guarantee, expressed or implied is made by Fluid Tech as to this information, or as to the safety, toxicity or effect of the use of this product.

MATERIAL SAFETY DATA SHEET

Identity: AQUASET II-G

SECTION I

Manufacturer's Name
Fluid Tech, LLC

Telephone Number
Information: (800) 995 - 5691
Emergency: (865) 809 - 9995

Address
130 N. 12th St
Montpelier, ID 83254

Date Revised
07/03/13

SECTION II - Hazardous Ingredients/Identity Information

Hazardous Components: Respirable dust may contain Silica, Crystalline Quartz (CAS #14808-60-7).

Specific Chemical Identity:

Sepiolite ($H_6 Mg_8 Si_{12} O_{30}[OH]_{10}) \cdot 6 H_2O$) CAS #63800-37-3

Common Names: Sepiolite, Meerschaum, Palygorskite, Clay-a natural mineral extracted from the earth

OSHA PEL: Classified as a nuisance dust when less than 1% crystalline silica is present, PEL=5.00mg/M^3 (respirable)

If greater than 1% crystalline silica, then exposures shall not exceed an 8-hour time-weighted average limit as stated in 29 CFR § 1910.1000 Table Z-1-A for air contaminants, specifically;

Silica, Crystalline Quartz (respirable) 0.1 mg/M^3

ACGHIH TLV: Classified as a nuisance dust when less than 1% crystalline silica, TLV-TWA=10 mg/M^3 (Total dust), 5 mg/M^3 (Respirable)

If greater than 1% crystalline silica, the TLV-TWA = 0.1 mg/M^3 (respirable crystalline quartz). See Threshold Limit Value and Biological Exposure Indices for 1991-1992, American Conference of Governmental Industrial Hygienists.

Other Limits Recommended: National Institute for Occupational Safety and Health (NIOSH). Recommended standard maximum permissible concentration = 0.05 mg/M^3 (respirable crystalline quartz) as determined by a full shift sample up to 10-hour working day, 40-hour work week. See NIOSH Criteria for a Recommended Standard Occupational Exposure to Crystalline Silica).

SECTION III - Physical/Chemical Characteristics

Boiling Point: More than 1000^0F

Bulk Density: 50lbs/ft^3

Vapor Pressure (mm Hg): None

Melting Point: None

Vapor Density (AIR = 1): N/A

Evaporation Rate: None

Solubility in Water: Insoluble in water.

Appearance and Odor: Light gray to tan granules.

SECTION IV - Fire and Explosion Hazard Data

Flash Point (Method Used): Non-flammable

Flammable Limits: None **LEL:** None **UEL:** None

Extinguishing Media: None required **Special**

Fire Fighting Procedures: None **Unusual**

Fire and Explosion Hazards: None

SECTION V - Reactivity Data

Stability: **Stable**

Conditions to Avoid: None

Incompatibility (Materials to Avoid): None

Hazardous Decomposition or Byproducts: None

Hazardous Polymerization: **Will Not Occur**

Conditions to Avoid: None

SECTION VI - Health Hazard Data

Route(s) of Entry: **Inhalation?** Yes **Skin?** No **Ingestion?** No

Health Hazards (Acute and Chronic): May be harmful if inhaled in sufficient quantities. Prolonged exposure to Sepiolite Clay dust may cause a relatively benign lung disease, though there is a risk of the development of massive fibrosis. Repeated and prolonged exposure to respirable crystalline quartz which may be contained in Sepiolite Clay dust may cause delayed (chronic) lung injury (silicosis). Silicosis is a form of disabling pulmonary fibrosis which can be progressive and may lead to death.

Carcinogenicity: **NTP?** Yes **IARC Monographs?** Yes **OSHA Regulated?** Yes
IARC has reported that there is inadequate evidence for the carcinogenicity of Sepiolite in experimental animals and that there is no data available to evaluate the carcinogenicity of Sepiolite in humans (IARC Class 3).

Sepiolite Clay, like other naturally occurring minerals, may contain crystalline silica. IARC has concluded that there is limited evidence for the carcinogenicity of crystalline silica to humans and sufficient evidence for the carcinogenicity of crystalline silica to experimental animals (IARC Class 2A). The NTP has concluded that "silica, crystalline (respirable)" may reasonably be anticipated to be a carcinogen, based on sufficient evidence for the carcinogenicity of respirable crystalline silica in experimental animals and limited evidence in humans.

Signs and Symptoms of Exposure: Undue breathlessness, wheezing, cough and sputum production.

Medical Conditions Generally Aggravated by Exposure: Pulmonary function may be reduced by inhalation of respirable crystalline silica that may be in Sepiolite dust. Lung scarring produced by such inhalation may lead to a progressive massive fibrosis of the lung which may aggravate other pulmonary conditions and diseases and which increases susceptibility to pulmonary tuberculosis. Progressive massive fibrosis may be accompanied by right heart enlargement, heart failure and pulmonary failure. Smoking aggravates the effects of exposure.

Emergency and First Aid Procedures: For dust in eyes, wash immediately with water. If irritation persists, seek medical attention. For gross inhalation, remove person immediately to fresh air, give artificial respiration as needed, seek medical attention as needed.

SECTION VII - Precautions for Safe Handling and Use

Waste Disposal Method: Dispose in accordance with Federal, State and Local regulations.

Precautions to be Taken in Handling and Storing: Avoid breakage of bagged material or spills of bulk material. See control measures in Section VIII.

Other Precautions: Use dustless systems for handling, storage, and clean up so that airborne dust does not exceed the PEL. Use adequate ventilation and dust collection. Practice good housekeeping. Do not permit dust to collect on walls, floors, sills, ledges, machinery or equipment. Maintain, clean and fit test respirators in accordance with OSHA regulations. Maintain and test ventilation and dust collection equipment. Wash or vacuum clothing which has become dusty. See also control measures in Section VIII.

See OSHA Hazard Communication Rule 29 CFR Sections 1910.1200, 1915.99, 1917.28, 1918.90, 1926.59 and 1928.21 and state and local worker or community "right to know laws and regulations. We recommend that smoking be prohibited in all areas where respirators must be used. WARN YOUR EMPLOYEES (AND YOUR CUSTOMERS – USERS IN CASE OF RESALE) BY POSTING AND OTHER MEANS OF THE HAZARDS AND OSHA PRECAUTIONS TO BE USED. PROVIDE TRAINING FOR YOUR EMPLOYEES ABOUT THE OSHA PRECAUTIONS.

See also American Society for Testing and Materials (ASTM) standard practice E 1132-86, "Standard Practice for Health Requirements Relating to Occupational Exposure to Quartz Dust.

SECTION VIII - Control Measures

Respiratory Protection (Specify Type):

The following chart specifies the type of respirators, which may provide respiratory protection for respirable crystalline silica that may be contained in Sepiolite Clay dust.

RESPIRATORY PROTECTION FOR CRYSTALLINE SILICA

Condition Particulate Concentration	MINIMUM RESPIRATORY PROTECTION*
Up to 5 X PEL	Any dust respirator
Up to 10 X PEL	Any dust respirator, except single-use or quarter-mask respirator. Any fume respirator of high efficiency particulate filter respirator. Any supplied-air respirator. Any self-contained breathing apparatus.
Up to 50 X PEL	A high efficiency particulate filter respirator with a full face-piece. Any supplied-air respirator with a full face-piece, helmet or hood. Any self-contained breathing apparatus with a full face-piece.
UP to 500 X PEL	A powered air-purifying respirator with a high efficiency particulate filter. A Type C supplied air respirator operated in pressure-demand or other positive pressure or continuous-flow mode.
Greater than 500 X PEL or entry and escape from unknown concentrations.	Self-contained breathing apparatus with a full face-piece operated in pressure-demand or other positive pressure mode. A combination respirator which includes a Type C supplied-air respirator with a face-piece operated in pressure-demand or other positive pressure continuous-flow mode and an auxiliary self-contained breathing apparatus operated in pressure-demand or other positive pressure mode.

Ventilation:

Local Exhaust Use sufficient local exhaust to reduce the level of dust to the PEL. See ACGIH "Industrial Ventilation, A Manual of Recommended Practice, "the latest edition.

Mechanical: See "Other Precautions" under Section VII.

Special: See "Other Precautions" under Section VII.

Other: See "Other Precautions" under Section VII.

Protective Gloves: Optional.

Eye Protection: Wear protective shield (safety glasses) when exposed to dust particles.

Other Protective Clothing and Equipment: Optional

Work/Hygienic Practices: Avoid creating and breathing dust. See "Other Precautions" under Section VII.

The information and recommendations contained herein are based upon data believed to be correct. However, no guarantee or warranty to any kind, express or implied is made with respect to the information contained herein. We accept no responsibility and disclaim all liability for any harmful health effects which may be caused by purchase, resale use or exposure to our Sepiolite clay. Customers-users of Sepiolite clay must comply with all applicable health and safety laws, regulations and orders.

MATERIAL SAFETY DATA SHEET

Identity: AQUASET II-H

SECTION I

Manufacturer's Name
Fluid Tech LLC

Telephone Number
Information: (800) 995 - 5691
Emergency: (865) 809 - 6475

Address
130 N. Fluid Tech LLC
Montpelier, ID 83254

Date Revised
07/03/13

SECTION II - Hazardous Ingredients/Identity Information

Hazardous Components: Respirable dust may contain Silica, Crystalline Quartz (CAS #14808-60-7).

Specific Chemical Identity:

Sepiolite ($H_6 Mg_8 Si_{12} O_{30}[OH]_{10}) \cdot 6 H_2O$) CAS #63800-37-3

Common Names: Sepiolite, Meerschaum, Palygorskite, Clay-a natural mineral extracted from the earth

OSHA PEL: Classified as a nuisance dust when less than 1% crystalline silica is present, PEL=5.00mg/M^3 (respirable)

If greater than 1% crystalline silica, then exposures shall not exceed an 8-hour time-weighted average limit as stated in 29 CFR § 1910.1000 Table Z-1-A for air contaminants, specifically;

Silica, Crystalline Quartz (respirable) 0.1 mg/M^3

ACGHIH TLV: Classified as a nuisance dust when less than 1% crystalline silica, TLV-TWA=10 mg/M^3 (Total dust), 5 mg/M^3 (Respirable)

If greater than 1% crystalline silica, the TLV-TWA = 0.1 mg/M^3 (respirable crystalline quartz). See Threshold Limit Value and Biological Exposure Indices for 1991-1992, American Conference of Governmental Industrial Hygienists.

Other Limits Recommended: National Institute for Occupational Safety and Health (NIOSH). Recommended standard maximum permissible concentration = 0.05 mg/M^3 (respirable crystalline quartz) as determined by a full shift sample up to 10-hour working day, 40-hour work week. See NIOSH Criteria for a Recommended Standard Occupational Exposure to Crystalline Silica).

SECTION III - Physical/Chemical Characteristics

Boiling Point: More than 1000^0F

Bulk Density : 60lbs/ft^3

Vapor Pressure (mm Hg): None

Melting Point: None

Vapor Density (AIR = 1): N/A

Evaporation Rate: None

Solubility in Water: Insoluble in water.

Appearance and Odor: Light gray to tan powder.

SECTION IV - Fire and Explosion Hazard Data

Flash Point (Method Used): Non-flammable

Flammable Limits: None **LEL:** None **UEL:** None

Extinguishing Media: None required

Special Fire Fighting Procedures: None

Unusual Fire and Explosion Hazards: None

SECTION V - Reactivity Data

Stability: **Stable**

Conditions to Avoid: None

Incompatibility (Materials to Avoid): None

Hazardous Decomposition or Byproducts: None

Hazardous Polymerization: **Will Not Occur**

Conditions to Avoid: None

SECTION VI - Health Hazard Data

Route(s) of Entry: **Inhalation?** Yes **Skin?** No **Ingestion?** No

Health Hazards (Acute and Chronic): May be harmful if inhaled in sufficient quantities. Prolonged exposure to Sepiolite Clay dust may cause a relatively benign lung disease, though there is a risk of the development of massive fibrosis. Repeated and prolonged exposure to respirable crystalline quartz which may be contained in Sepiolite Clay dust may cause delayed (chronic) lung injury (silicosis). Silicosis is a form of disabling pulmonary fibrosis which can be progressive and may lead to death.

Carcinogenicity: **NTP?** Yes **IARC Monographs?** Yes **OSHA Regulated?** Yes
IARC has reported that there is inadequate evidence for the carcinogenicity of Sepiolite in experimental animals and that there is no data available to evaluate the carcinogenicity of Sepiolite in humans (IARC Class 3).
Sepiolite Clay, like other naturally occurring minerals, may contain crystalline silica. IARC has concluded that there is limited evidence for the carcinogenicity of crystalline silica to humans and sufficient evidence for the carcinogenicity of crystalline silica to experimental animals (IARC Class 2A). The NTP has concluded that "silica, crystalline (respirable)" may reasonably be anticipated to be a carcinogen, based on sufficient evidence for the carcinogenicity of respirable crystalline silica in experimental animals and limited evidence in humans.

Signs and Symptoms of Exposure: Undue breathlessness, wheezing, cough and sputum production.

Medical Conditions Generally Aggravated by Exposure: Pulmonary function may be reduced by inhalation of respirable crystalline silica that may be in Sepiolite dust. Lung scarring produced by such inhalation may lead to a progressive massive fibrosis of the lung which may aggravate other pulmonary conditions and diseases and which increases susceptibility to pulmonary tuberculosis. Progressive massive fibrosis may be accompanied by right heart enlargement, heart failure and pulmonary failure. Smoking aggravates the effects of exposure.

Emergency and First Aid Procedures: For dust in eyes, wash immediately with water. If irritation persists, seek medical attention. For gross inhalation, remove person immediately to fresh air, give artificial respiration as needed, seek medical attention as needed.

SECTION VII - Precautions for Safe Handling and Use

Waste Disposal Method: Dispose in accordance with Federal, State and Local regulations.

Precautions to be Taken in Handling and Storing: Avoid breakage of bagged material or spills of bulk material. See control measures in Section VIII.

Other Precautions: Use dustless systems for handling, storage, and clean up so that airborne dust does not exceed the PEL. Use adequate ventilation and dust collection. Practice good housekeeping. Do not permit dust to collect on walls, floors, sills, ledges, machinery or equipment. Maintain, clean and fit test respirators in accordance with OSHA regulations. Maintain and test ventilation and dust collection equipment. Wash or vacuum clothing which has become dusty. See also control measures in Section VIII.

See OSHA Hazard Communication Rule 29 CFR Sections 1910.1200, 1915.99, 1917.28, 1918.90, 1926.59 and 1928.21 and state and local worker or community "right to know laws and regulations. We recommend that smoking be prohibited in all areas where respirators must be used. WARN YOUR EMPLOYEES (AND YOUR CUSTOMERS – USERS IN CASE OF RESALE) BY POSTING AND OTHER MEANS OF THE HAZARDS AND OSHA PRECAUTIONS TO BE USED. PROVIDE TRAINING FOR YOUR EMPLOYEES ABOUT THE OSHA PRECAUTIONS.

See also American Society for Testing and Materials (ASTM) standard practice E 1132-86, "Standard Practice for Health Requirements Relating to Occupational Exposure to Quartz Dust.

SECTION VIII - Control Measures

Respiratory Protection (Specify Type):

The following chart specifies the type of respirators, which may provide respiratory protection for respirable crystalline silica that may be contained in Sepiolite Clay dust.

RESPIRATORY PROTECTION FOR CRYSTALLINE SILICA

Condition Particulate Concentration	MINIMUM RESPIRATORY PROTECTION*
Up to 5 X PEL	Any dust respirator

Up to 10 X PEL	Any dust respirator, except single-use or quarter-mask respirator. Any fume respirator of high efficiency particulate filter respirator. Any supplied-air respirator. Any self-contained breathing apparatus.
Up to 50 X PEL	A high efficiency particulate filter respirator with a full face-piece. Any supplied-air respirator with a full face-piece, helmet or hood. Any self-contained breathing apparatus with a full face-piece.
UP to 500 X PEL	A powered air-purifying respirator with a high efficiency particulate filter. A Type C supplied air respirator operated in pressure-demand or other positive pressure or continuous-flow mode.
Greater than 500 X PEL or entry and escape from unknown concentrations.	Self-contained breathing apparatus with a full face-piece operated in pressure-demand or other positive pressure mode. A combination respirator which includes a Type C supplied-air respirator with a face-piece operated in pressure-demand or other positive pressure continuous-flow mode and an auxiliary self-contained breathing apparatus operated in pressure-demand or other positive pressure mode.

Ventilation:

Local Exhaust Use sufficient local exhaust to reduce the level of dust to the PEL. See ACGIH "Industrial Ventilation, A Manual of Recommended Practice, "the latest edition.

Mechanical: See "Other Precautions" under Section VII.

Special: See "Other Precautions" under Section VII.

Other: See "Other Precautions" under Section VII.

Protective Gloves: Optional.

Eye Protection: Wear protective shield (safety glasses) when exposed to dust particles.

Other Protective Clothing and Equipment: Optional

Work/Hygienic Practices: Avoid creating and breathing dust. See "Other Precautions" under Section VII.

The information and recommendations contained herein are based upon data believed to be correct. However, no guarantee or warranty to any kind, express or implied is made with respect to the information contained herein. We accept no responsibility and disclaim all liability for any harmful health effects which may be caused by purchase, resale use or exposure to our Sepiolite clay. Customers-users of Sepiolite clay must comply with all applicable health and safety laws, regulations and orders.

MATERIAL SAFETY DATA SHEET

Date revised: 11/4/2010

all natural ingredients
PERMA-GUARD™
Pure Diatomaceous Earth Products

1. CHEMICAL PRODUCT AND COMPANY IDENTIFICATION

Trade Name(s): **Fossil Shell Flour**
Generic Name: Natural Diatomaceous earth
Chemical Name: Amorphous Silica
Manufacturer: Perma-Guard, Inc.
Address: 625 East, 2150 South
City: Bountiful State: UT Zip: 84010

CAS: 61790-53-2
EINECS: 310-127-6
Formula: SIO_2

Emergency: CHEMTREC-USA (800) 424-9300
International: (703) 527-3887 (Collect)

2. COMPOSITION INFORMATION

INGREDIENT Name:	CAS Number:	%	PEL and TLV (except as noted)
NATURAL DIATOMACEOUS EARTH (DE) AMORPHOUS SILICA	61790-53-2	100	Diatomaceous Earth (uncalcined) 6 mg/M³ TOTAL DUST, MSHA 10 mg/M³ TOTAL DUST, ACGIH

3. HAZARD IDENTIFICATION

Summary: PROLONGED AND REPEATED EXPOSURE TO EXESSIVE CONCENTRATIONS OF THIS PRODUCT DUST, OR ANY NUISANCE DUST, CAN CAUSE CHRONIC PULMONARY DISEASE. DUST CONTACT WITH EYES MAY CAUSE TEMPORARY SCRATCHINESS OR REDNESS. THIS PRODUCT HAS NOT BEEN CLASSIFIED AS A CARCINOGEN BY NTP OR IARC.

Medical Conditions which may be aggravated: PRE- EXISTING UPPER RESPIRATORY AND LUNG DISEASE SUCH AS. BUT NOT LIMITED TO BRONCHITIS, EMPHYSEMA AND ASTHMA.
Target Organ(s): LUNGS, EYES

Acute health Effects: TRANSITORY UPPER RESPIRATORY OR EYE IRRITATION.
Chronic Health Effects: PROLONGED AND REPEATED EXPOSURES TO EXCESSIVE CONCENTRATIONS OF PRODUCT DUST, IN EXCESS OF THE PEL/TLV, CAN CAUSE CHRONIC PULMONARY DISEASE.

Primary Entry Route(s): INHALATION, DUST CONTACT WITH EYES.
Inhalation: IRRITATION AND SORENESS IN THROAT & NOSE. IN EXTREME EXPOSURES SOME CONGESTION MAY OCCUR.
Eyes: TEMPORARY IRRITATION OR INFAMMATION.
Skin Contact: NA Skin Absorption: NA Ingestion: NOT HAZARDOUS WHEN INGESTED

4. FIRST AID MEASURES

Inhalation: REMOVE TO FRESH AIR. DRINK WATER TO CLEAR THROAT AND BLOW NOSE TO EVACUATE DUST.
Eyes: FLUSH EYES WITH LARGE QUANTITIES OF WATER. IF IRRITATION PERSISTS CONSULT A PHYSICIAN.
Skin Contact: NA Skin Absorption: NA Ingestion: NOT HAZARDOUS WHEN INGESTED

5. FIRE FIGHTING MEASURES

Flash Point: (Method): NON FLAMMABLE NFPA Flammable/Combustible Liquid Classification: NA
Flammable Limits: LEL: NA UEL: NA Auto-Ignition Temperature: NA
Extinguishing Media: NA Unusual Fire or Explosive Hazards: NONE Special Fire-Fighting Procedures: NONE

6. ACCIDENTAL RELEASE MEASURES

Procedures for Spill/Leak: VACUUM/CLEAN DUST WITH EQUIPMENT FITTED WITH A HEPA FILTER. USE A DUST SUPPRESSANT SUCH AS WATER IF SWEEPING IS NECESSARY.

7. HANDLING AND STORAGE

Minimize Dust generation and accumulation. Avoid Breathing Dust. Avoid contact with eyes. Seal broken bags immediately. Continue to follow all MSDS label warnings when handling empty containers.

8. EXPOSURE CONTROLS/PERSONAL PROTECTION

Goggles: GOGGLES OR SAFETY GLASSES WITH SIDE-SHIELDS ARE RECOMMENDED.
Gloves: NOT NORMALLY REQUIRED.
Respirator: <10X PEL, USE AN N95 QUARTER OR HALF MASK RESPIRATOR. <50X PEL, USE A FUILL FACE RESPIRATOR EQUIPPED WITH N95 FILTERS. <200X PEL, USE A POWERED AIR PURIFYING RESPIRATOR (POSITIVE PRESSURE) WITH N95 FILTERS. >200X PEL, USE A FULL FACE TYPE C SUPPLIED AIR RESPIRATOR (CONTINUOUS FLOW MODE).

Ventilation: USE SUFFICIENT NATURAL OR MECHANICAL VENTILATION TO KEEP DUST LEVEL BELOW PEL.
Other: Special considerations for repair/maintenance of contaminated equipment: INSURE PROPER RESPIRATORY PROTECTION.

9. PHYSICAL AND CHEMICAL PROPERTIES

Appearance and odor: FINE WHITE POWDER, NO ODOR

Boiling Point:	NA	Evaporation Rate: (=1):	NA	Specific Gravity (water =1) :	2.2
Vapor Pressure:	NA	Melting Point:	ND	% Volatile by Volume:	NIL
Water Solubility:	Negligible	Vapor Density:	NA	pH:	7.5-9.0

10. STABILITY and REACTIVITY

MATERIAL IS STABLE. HAZARDOUS POLYMERIZATION CANNOT OCCUR.
Chemical Incompatibilities: HYDROFLUORIC ACID. Conditions to Avoid: NONE IN DESIGNED USE.

11. TOXICOLOGICAL INFORMATION

Summary: PROLONGED AND REPEATED EXPOSURE TO EXESSIVE CONCENTRATIONS OF THIS PRODUCT'S DUST, OR ANY NUISANCE DUST, CAN CAUSE CHRONIC PULMONARY DISEASE. DUST CONTACT WITH EYES MAY CAUSE TEMPORARY SCRATCHINESS OR REDNESS. THIS PRODUCT HAS NOT BEEN CLASSIFIED AS A CARCINOGEN BY THE NTP OR IARC.

12. ECOLOGICAL INFORMATION

GENERALLY CONSIDERED CHEMICALLY INERT IN THE ENVIRONMENT. USED MATERIAL WHICH HAS BECOME CONTAMINATED MAY HAVE SIGNIFICANTLY DIFFERENT CHARACTERISTICS BASED ON THE CONTAMINANTS AND SHOULD BE EVALUATED ACCORDINGLY.

13. DISPOSAL CONSIDERATIONS

WASTE IS NOT HAZARDOUS AS DEFINED BY RCRA (40 CFR261). OTHER STATE AND LOCAL REGULATIONS MAY VARY. CONSULT LOCAL AGENCIES AS NEEDED. USED MATERIAL WHICH HAS BECOME CONTAMINATED MAY HAVE SIGNIFICANTLY DIFFERENT CHARACTERISTICS BASED ON THE CONTAMINANTS AND SHOULD BE EVALUATED ACCORDINGLY

14. TRANSPORTATION INFORMATION

D.O.T. proper shipping name: EARTH, DIATOMACEOUS, CRUDE OR GROUND . Hazard Classification: NOT CLASSIFIED
Reportable Quantities: NOT APPLICABLE UN (United Nations), NA (North America) Number: NA

15. REGULATORY INFORMATION

OSHA: Hazard Communications Standard 29CFR 1910.1200: MATERIAL IS CONSIDERED HAZARDOUS. SEE SECTION 3
RCRA: THE MATERIAL IS NOT DEFINED AS HAZARDOUS WASTE 40 CFR 261.
TSCA: THIS MATERIAL IS LISTED IN THE TSCA INVENTORY, AND IS NOT OTHERWISE REGULATED BY TSCA SEC 4,5,6,7, OR 12.
CRCLA: MATERIAL IS NOT REPORTABLE UNDER CERCLA. LOCAL REQUIREMENTS MAY VARY.
SARA: 311/312 HAZARD CATEGORIES– IMMEDIATE AND DELAYED HEALTH , 313 REPORTABLE INGREDIENTS- NONE.
Canada: THIS PRODUCT IS LISTED ON THE DSL. California Proposition 65: NOT APPLICABLE.

16. OTHER INFORMATION

Storage Segregation Hazard Classes: NA Special Handling/Storage : REPAIR ALL BROKEN BAGS IMMEDIATELY
Special Workplace Engineering Controls: ADEQUATE VENTILATION TO KEEP DUST LEVEL BELOW PEL.

PREPARED/REVISED BY: Marvin Haney, Perma-Guard, Inc. (801) 726-7107 As of the date of this document, the foregoing information is believed to be accurate and is provided in good faith to comply with appropriate federal and state law(s). However, no warranty or representation with respect to such information is intended or given.

Safety Data Sheet:
Material Name: NITRIC ACID
SDS ID: ohs16550
Issue Date: 2014-06-19
Revision: 2.02

Other Sections
01 02 03 04 05 06 07 08 09 10 11 12 13 14 15 16

* * * Section 1 - PRODUCT AND COMPANY IDENTIFICATION * * *

Material Name:
NITRIC ACID

ChemADVISOR, Inc.
Stone Quarry Crossing 811 Camp Horne Road, Suite 220 Pittsburgh, PA 15237
E-mail: info@chemadvisor.com
MSDS is for reference use only; please contact manufacturer for emergency response information, routine product inquiries and orders.

Chemical Family
acids, inorganic

Synonyms
AQUA FORTIS; WFNA; RFNA; HYDROGEN NITRATE; AZOTIC ACID; NITRYL HYDROXIDE; NITAL; UN 2031; HNO3

* * * Section 2 - HAZARDS IDENTIFICATION * * *

Emergency Overview

Color: colorless to yellow

Change in color: Not available

Physical Form: liquid

Odor: irritating odor

Health Hazards: potentially fatal if inhaled, respiratory tract burns, skin burns, eye burns, mucous membrane burns

Physical Hazards: May ignite combustibles. May react on contact with water.

Potential Health Effects

Inhalation
Short Term: potentially fatal if inhaled, burns

Long Term: burns

Skin Contact
Short Term: burns

Long Term: burns

Eye Contact
Short Term: burns

Long Term: burns

Ingestion
Short Term: burns

Long Term: burns

---

* * * Section 3 - COMPOSITION / INFORMATION ON INGREDIENTS * * *

CAS EC No Registration No	Component Name Synonyms	67/548/EEC (DSD)	1272/2008 (CLP)	Percent
7697-37-2 231-714-2 --	NITRIC ACID	O C; R:8-35 Note(s): B	Ox. Liq. 3 - H272 Skin Corr. 1A - H314 Note(s): B	70
7732-18-5 231-791-2 --	WATER	--	--	30

---

* * * Section 4 - FIRST AID MEASURES * * *

Inhalation

If adverse effects occur, remove to uncontaminated area. Give artificial respiration if not breathing. If breathing is difficult, oxygen should be administered by qualified personnel. Get immediate medical attention.

Skin
Wash skin with soap and water for at least 15 minutes while removing contaminated clothing and shoes. Get immediate medical attention. Thoroughly clean and dry contaminated clothing before reuse. Destroy contaminated shoes.

Eyes
Immediately flush eyes with plenty of water for at least 15 minutes. Then get immediate medical attention.

Ingestion
Contact local poison control center or physician immediately. Never make an unconscious person vomit or drink fluids. Give large amounts of water or milk. Allow vomiting to occur. When vomiting occurs, keep head lower than hips to help prevent aspiration. If person is unconscious, turn head to side. Get medical attention immediately.

Note to Physicians
For inhalation, consider oxygen. Avoid gastric lavage or emesis.

---

* * * Section 5 - FIRE FIGHTING MEASURES * * *

See Section 9 for Flammability Properties

NFPA Ratings:
Health: 4 Fire: 0 Reactivity: 0 Other: OX
Hazard Scale: 0 = Minimal 1 = Slight 2 = Moderate 3 = Serious 4 = Severe

Flammable Properties
Negligible fire hazard. Oxidizer. May ignite or explode on contact with combustible materials.

Extinguishing Media
regular dry chemical, soda ash, water Large fires: Flood with water. Apply water from a protected location or from a safe distance.

Fire Fighting Measures
Move container from fire area if it can be done without risk. Cool containers with water spray until well after the fire is out. Stay away from the ends of tanks. For fires in cargo or storage area: Cool containers with water from unmanned hose holder or monitor nozzles until well after fire is out. If this is impossible then take the following precautions: Keep unnecessary people away, isolate hazard area and deny entry. Let the fire burn. Flood with water. Cool containers with water spray until well after the fire is out. Apply water from a protected location or from a safe distance. Stay upwind and keep out of low areas. Evacuate if fire gets out of control or containers are directly exposed to fire. Evacuation radius: 800 meters (1/2 mile).

---

* * * Section 6 - ACCIDENTAL RELEASE MEASURES * * *

Occupational spill/release
Avoid contact with combustible materials. Do not touch spilled material. Stop leak if possible without personal risk. Reduce vapors with water spray. Do not get water inside container. Small spills: Flood with water. Large spills: Dike for later disposal. Keep unnecessary people away, isolate hazard area and deny entry. Ventilate closed spaces before entering. Notify Local Emergency Planning Committee and State Emergency Response Commission for release greater than or equal to RQ (U.S. SARA Section 304). If release occurs in the U.S. and is reportable under CERCLA Section 103, notify the National Response Center at (800)424-8802 (USA) or (202)426-2675 (USA).

* * * Section 7 - HANDLING AND STORAGE * * *

Handling Procedures
Handle as a corrosive liquid. When mixing, slowly add to water to minimize heat generation and spattering. Subject to handling regulations: U.S. OSHA 29 CFR 1910.119. Keep emergency spill kit near storage and use areas.

Storage Procedures
Store and handle in accordance with all current regulations and standards. NFPA 430 Code for the Storage of Liquid and Solid Oxidizing Materials. Protect from physical damage. Avoid contact with light. Store in a tightly closed container. Store in a cool, dry place. Store in a well-ventilated area. Keep dry. Notify State Emergency Response Commission for storage or use at amounts greater than or equal to the TPQ (U.S. EPA SARA Section 302). SARA Section 303 requires facilities storing a material with a TPQ to participate in local emergency response planning (U.S. EPA 40 CFR 355 Part B). Store with acids. See original container for storage recommendations. Keep separated from incompatible substances.

* * * Section 8 - EXPOSURE CONTROLS / PERSONAL PROTECTION * * *

Component Exposure Limits

NITRIC ACID	7697-37-2
ACGIH:	2 ppm TWA
	4 ppm STEL
NIOSH:	2 ppmTWA; 5 mg/m3TWA
	4 ppmSTEL; 10 mg/m3STEL
	25 ppmIDLH
Europe:	1 ppm STEL; 2.6 mg/m3 STEL

OSHA (US):	2 ppmTWA; 5 mg/m3TWA
Mexico:	2 ppmTWA LMPE-PPT; 5 mg/m3TWA LMPE-PPT
	4 ppmSTEL [LMPE-CT]; 10 mg/m3STEL [LMPE-CT]

Component Analysis
Biological limit value
There are no biological limit values for any of this product's components.

Ventilation
Provide local exhaust or process enclosure ventilation system. Ensure compliance with applicable exposure limits.

PERSONAL PROTECTIVE EQUIPMENT
Eyes/Face Wear splash resistant safety goggles with a faceshield. Provide an emergency eye wash fountain and quick drench shower in the immediate work area.

Protective Clothing
Wear appropriate chemical resistant clothing.

Glove Recommendations
Wear appropriate chemical resistant gloves.

Respiratory Protection
The following respirators and maximum use concentrations are drawn from NIOSH and/or OSHA. 25 ppm Any supplied-air respirator operated in a continuous-flow mode. Any air-purifying respirator with a full facepiece and a canister providing protection against this substance. Only non-oxidizable sorbents are allowed (not charcoal). Any air-purifying full-facepiece respirator (gas mask) with a chin -style, front-mounted or back-mounted canister providing protection against the compound of concern. Only non-oxidizable sorbents are allowed (not charcoal). Any self-contained breathing apparatus with a full facepiece. Any supplied-air respirator with a full facepiece. Emergency or planned entry into unknown concentrations or IDLH conditions - Any self-contained breathing apparatus that has a full facepiece and is operated in a pressure-demand or other positive-pressure mode. Any supplied-air respirator with a full facepiece that is operated in a pressure-demand or other positive-pressure mode in combination with an auxiliary self-contained breathing apparatus operated in pressure-demand or other positive-pressure mode. Escape - Any air-purifying full-facepiece respirator (gas mask) with a chin-style, front-mounted or back-mounted canister providing protection against the compound of concern. Only non-oxidizable sorbents are allowed (not charcoal). Any appropriate escape-type, self-contained breathing apparatus.

* * * Section 9 - PHYSICAL AND CHEMICAL PROPERTIES * * *

Appearance	Not available	**Physical State**	Liquid
Odor	irritating odor	**Color**	colorless to yellow

Odor Threshold	Not available	**pH**	1
Melting Point	-42 °C	**Boiling Point**	83 °C
Freezing point	Not available	**Evaporation Rate**	Not available
Boiling Point Range	Not available	**Flammability (solid, gas)**	Not available
Autoignition	Not available	**Flash Point**	not flammable
Lower Explosive Limit	Not available	**Decomposition**	Not available
Upper Explosive Limit	Not available	**Vapor Pressure**	47.9 mmHg at 20 ° C
Vapor Density (air=1)	3.2	**Specific Gravity (water=1)**	1.5027 at 25 °C
Water Solubility	(miscible)	**Partition coefficient: n-octanol/water**	Not available
Viscosity	Not available	**Solubility (Other)**	Not available
Density	Not available	**pH Solution**	1 M
Physical Form	liquid	**Molecular Formula**	H-N-O3
Molecular Weight	63.01		

Solvent Miscibility

Miscible
ether

---

* * * Section 10 - STABILITY AND REACTIVITY * * *

Chemical Stability
Stable at normal temperatures and pressure. May react with evolution of heat on contact with water.

Conditions to Avoid
Avoid contact with combustible materials. Keep dry. Dangerous gases may accumulate in confined spaces. Keep out of water supplies and sewers.

Incompatible Materials

acids, combustible materials, halo carbons, amines, bases, oxidizing materials, metals, halogens, metal salts, metal oxides, reducing agents, peroxides, metal carbide, cyanides,

NITRIC ACID: ACETIC ACID: May react explosively. ACETIC ANHYDRIDE: Explosive reaction by friction or impact. ACETONE: May react explosively. ACETONITRILE: Explosive mixture. 4-ACETOXY-3-METHOXYBENZALDEHYDE: Exothermic reaction. ACROLEIN: Temperature and pressure increase in closed container. ACRYLONITRILE: Explosive reaction at 90 C. ACRYLONITRILE-METHACRYLATE COPOLYMER: Incompatible. ALCOHOLS: Possible violent reaction or explosion; formation of explosive compound in the presence of heavy metals. ALKANETHIOLS: Exothermic reaction with possible ignition. 2-ALKOXY-1,3-DITHIA-2-PHOSPHOLANE: Ignition reaction. ALLYL ALCOHOL: Temperature and pressure increase in closed container. ALLYL CHLORIDE: Temperature and pressure increase in closed container. AMINES (ALIPHATIC OR AROMATIC): Possible ignition reaction. 2-AMINOETHANOL: Temperature and pressure increase in closed container. 2-AMINOTHIAZOLE: Explosive reaction. AMMONIA (GAS): Burns in an atmosphere of nitric acid vapor. AMMONIUM HYDROXIDE: Temperature and pressure increase in closed container. AMMONIUM NITRATE: Forms explosive mixture. ANILINE: Ignites on contact. ANILINIUM NITRATE: Forms explosive solution. ANION EXCHANGE RESINS: Possible violent exothermic reaction. ANTIMONY: Violent reaction. ARSINE: Explosive reaction. ARSINE-BORON TRIBROMIDE: Violent oxidation. BASES: Reacts. BENZENE: Explosive reaction. BENZIDINE: Spontaneous ignition. BENZONITRILE: Possible explosion. BENZOTHIOPHENE DERIVATIVES: Formation of possibly explosive compounds. N-BENZYL-N-ETHYLANILINE: Vigorous decomposition. 1,4-BIS(METHOXYMETHYL)2,3,5,6-TETRAMETHYLBENZENE: Gas evolution. BISMUTH: Intense exothermic reaction or explosion. 1,3-BIS(TRIFLUOROMETHYL)BENZENE: Possible explosion. BORON: Violent reaction with incandescence. BORON DECAHYDRIDE: Explosive reaction. BORON PHOSPHIDE: Ignition reaction. BROMINE PENTAFLUORIDE: Ignition reaction. N-BUTYL MERCAPTAN: Ignition reaction. N-BUTYRALDEHYDE: Temperature and pressure increase in closed container. CADMIUM PHOSPHIDE: Explosive reaction. CALCIUM HYPOPHOSPHITE: Ignition reaction. CARBON (PULVERIZED): Violent reaction. CELLULOSE: Forms easily combustible ester. CHLORATES: Reacts. CHLORINE: Incompatible. CHLORINE TRIFLUORIDE: Violent reaction. CHLOROBENZENE: Possible explosion. 4-CHLORO-2-NITROANILINE: Forms explosive compound. CHLOROSULFONIC ACID: Temperature and pressure increase in closed container. COAL: Explosive mixture. COATINGS: Attacks. CRESOL: Temperature and pressure increase in closed container. CROTONALDEHYDE: Violent decomposition with ignition. CUMENE: Temperature and pressure increase in closed container. CUPRIC NITRIDE: Explosive reaction. CUPROUS NITRIDE: Violent reaction. CYANATES: Possible explosive reaction. CYCLOHEXANONE: Violent reaction. CYCLOHEXYLAMINE: Forms explosive compound. CYCLOPENTADIENE: Explosive reaction. 1,2-DIAMINOETHANEBIS (TRIMETHYLGOLD): Explosive reaction. DIBORANE: Spontaneous ignition. DI-2-BUTOXYETHYL ETHER: Violent decomposition reaction. 2,6-DI-T-BUTYL PHENOL: Formation of explosive compound. DICHLOROETHANE: Forms shock and heat sensitive mixture. DICHLOROETHYLENE: Forms explosive compound. DICHLOROMETHANE: Forms explosive solution. DICYCLOPENTADIENE: Spontaneous ignition. DIENES: Ignition reaction. DIETHYLAMINO ETHANOL: Possible explosion. DIETHYL ETHER: Possible explosion. 3,6-DIHYDRO-1,2,2H-OXAZINE: Explosive interaction. DIISOPROPYL ETHER: Temperature and pressure increase in closed

container. DIMETHYLAMINOMETHYLFERROCENE: Violent decomposition if heated. DIMETHYL ETHER: Forms explosive compound. DIMETHYL HYDRAZINE: Ignites on contact. DIMETHYL SULFOXIDE + 1,4-DIOXANE: Explosion. DIMETHYL SULFOXIDE + <14% WATER: Explosive reaction. DINITROBENZENE: Explosion hazard. DINITROTOLUENE: Explosive reaction. DIOXANE + PERCHLORIC ACID: Possible explosion. DIPHENYL DISTIBENE: Explosive oxidation. DIPHENYL MERCURY + CARBON DISULFIDE: Violent reaction. DIPHENYL TIN: Ignition reaction. DISODIUM PHENYL ORTHOPHOSPHATE: Violent explosion. DIVINYL ETHER: Possible ignition reaction. EPICHLOROHYDRIN: Temperature and pressure increase in closed container. ETHANESULFONAMIDE: Explosive reaction. ETHOXY-ETHYLENE DITHIOPHOSPHATE: Ignition on contact. M-ETHYL ANILINE: Ignition reaction. ETHYLENE DIAMINE: Temperature and pressure increase in closed container. ETHYLENE GLYCOL: Forms shock and heat sensitive mixture. ETHYLENEIMINE: Temperature and pressure increase in closed container. 5-ETHYL-2-METHYL PYRIDINE: Explosive reaction. ETHYL PHOSPHINE: Ignition reaction. 5-ETHYL-2-PICOLINE: Forms explosive compounds. FERROUS OXIDE (POWDERED): Intense exothermic reaction. FLUORINE: Possible explosive reaction. FORMIC ACID: Exothermic reaction with release of toxic gases. 2-FORMYLAMINO-1-PHENYL-1,3-PROPANEDIOL: Possible explosion. FUEL OIL (BURNING): Explosion. FULMINATES: Reacts. FURFURYLIDENE KETONES: Ignites on contact. GERMANIUM: Violent reaction. GLYCEROL: Possible explosion. GLYOXAL: Temperature and pressure increase in closed container. HEXALITHIUM DISILICIDE: Explosive reaction. HEXAMETHYLBENZENE: Possible explosion. 2,2,4,4,6,6-HEXAMETHYLTRITHIANE: Explosive oxidation. HEXENAL: Explodes on heating. HYDRAZINE: Violent reaction. HYDRAZOIC ACID: Energetic reaction. HYDROGEN IODIDE: Ignition reaction. HYDROGEN PEROXIDE: Forms unstable mixture. HYDROGEN PEROXIDE AND KETONES: Forms explosive products. HYDROGEN PEROXIDE AND MERCURIC OXIDE: Forms explosive compounds. HYDROGEN PEROXIDE AND THIOUREA: Forms explosive compounds. HYDROGEN SELENIDE: Ignition reaction. HYDROGEN SULFIDE: Incandescent reaction. HYDROGEN TELLURIDE: Ignition and possible explosive reaction. INDANE AND SULFURIC ACID: Explosive reaction. ISOPRENE: Temperature and pressure increase in closed container. KETONES (CYCLIC): Violent reaction. LACTIC ACID + HYDROFLUORIC ACID: Explosive reaction. LITHIUM: Ignition reaction. LITHIUM SILICIDE: Incandescent reaction. MAGNESIUM: Explosive reaction. MAGNESIUM + 2-NITROANILINE: May ignite on contact. MAGNESIUM PHOSPHIDE: Incandescent reaction. MAGNESIUM SILICIDE: Violent reaction. MAGNESIUM-TITANIUM ALLOY: Forms shock and heat sensitive mixture. MANGANESE (POWDERED): Incandescence and possible explosion. MESITYL OXIDE: Temperature and pressure increase in closed container. MESITYLENE: Possible explosive reaction. METALS: Violent reaction with explosion or ignition. METAL ACETYLIDES: Violent or explosive reaction. METAL CARBIDES: Violent or explosive reaction. METAL CYANIDES: Explosive reactions. METAL FERRICYANIDE OR FERROCYANIDE: Violent reaction. METAL SALICYLATES: Forms explosive compounds. METAL THIOCYANATES: Possible explosion. 2-METHYLBENZIMIDAZOLE + SULFURIC ACID: Possible explosive reaction. 4-METHYLCYCLOHEXANONE: Explosive reaction. 2-METHYL-5-ETHYLPYRIDINE: Temperature and pressure increase in closed container. METHYL THIOPHENE: Ignition reaction. NEODYMIUM PHOSPHIDE: Violent reaction. NICKEL TETRAPHOSPHIDE: Ignition reaction. NITRO AROMATIC HYDROCARBONS: Forms highly explosive products. NITROBENZENE: Explosive reaction, especially in the presence of water. NITROMETHANE: Explosive reaction. NITRONAPHTHALENE: Explosion hazard. NON-

METAL OXIDES: Explosive reaction. OLEUM: Temperature and pressure increase in closed container. ORGANIC MATERIALS: Fire and explosion hazard. ORGANIC SUBSTANCES: Possible explosion. PERCHLORATES: Possible explosion. PHENYL ACETYLENE + 1,1-DIMETHYLHYDRAZINE: Violent reaction. PHENYL ORTHOPHOSPHORIC ACID DISODIUM SALT: Forms explosive products. PHOSPHINE + OXYGEN: Spontaneous ignition. PHOSPHONIUM IODIDE: Ignition reaction. PHOSPHORUS (VAPOR): Ignites when heated. PHOSPHOROUS HALIDES: Ignition reaction. PHOSPHORUS TETRAIODIDE: Vigorous reaction. PHOSPHORUS TRICHLORIDE: Explosive reaction. PHTHALIC ACID: Possible explosive reaction. PHTHALIC ANHYDRIDE: Exothermic reaction and forms explosive products. PICRATES: Reacts. PLASTICS: Attacks. POLYALKENES: Intense reaction. POLYDIBROMOSILANES: Explosive reaction. POLY(ETHYLENE OXIDE) DERIVATIVES: Possible explosion. POLYPROPYLENE: Temperature and pressure increase in a closed container. POLY(SILYLENE): Ignition. POLYURETHANE (FOAM): Vigorous reaction. POTASSIUM HYPOPHOSPHITE: Explosive reaction. POTASSIUM PHOSPHINATE: Explodes on evaporation. B-PROPIOLACTONE: Temperature and pressure increase in closed container. PROPIOPHENONE + SULFURIC ACID: Exothermic reaction above -5 C. PROPYLENE GLYCOL + HYDROFLUORIC ACID + SILVER NITRATE: Explosive mixture. PROPYLENE OXIDE: Temperature and pressure increase in closed container. PYRIDINE: Temperature and pressure increase in closed container. PYROCATECHOL: Ignites on contact. REDUCING AGENTS: Possible explosive or ignition reaction. RESORCINOL: Possible explosion. RUBBER: Vigorous reaction, possible explosion. SELENIUM: Vigorous reaction. SELENIUM HYDRIDE: Ignition or incandescent reaction. SELENIUM IODOPHOSPHIDE: Explosive reaction. SILICON: Violent reaction. SILICONE OIL: Possible explosion. SILVER BUTEN-3-YNIDE: Explosion. SODIUM: Spontaneous ignition. SODIUM AZIDE: Exothermic reaction. SODIUM HYDROXIDE: Temperature and pressure increase in a closed container. STIBINE: Explosive reaction. SUCROSE (SOLID): Vigorous reaction. SULFAMIC ACID: Violent reaction with evolution of toxic nitrous oxide. SULFIDES: Reacts. SULFUR DIOXIDE: Explosive reaction. SULFUR HALIDES: Violent reaction. SULFURIC ACID: Possible explosion. SULFURIC ACID + GLYCERIDES: Explosive reaction. SULFURIC ACID + TEREPHTHALIC ACID: Violent reaction. SURFACTANTS + PHOSPHORIC ACID: Explosion hazard. TERPENES: Spontaneous ignition. TETRABORANE: Explosive reaction. TETRABORANE DECAHYDRIDE: Explosive reaction. TETRAPHOSPHOROUS DIIODOTRISELENIDE: Explosive reaction. TETRAPHOSPHOROUS IODIDE: Ignites on contact. TETRAPHOSPHOROUS TETRAOXIDE TRISULFIDE: Violent reaction. THIOALDEHYDES: Violent reaction. THIOKETONES: Violent reaction. THIOPHENES: Explosive reaction. TITANIUM: Forms shock-sensitive compound. TITANIUM ALLOYS: Possible explosive reaction. TITANIUM-MAGNESIUM ALLOY: Possible explosion on impact. TOLUENE: Violent reaction. TOLUIDENE: Ignition reaction. 1,3,5-TRIACETYLHEXAHYDRO-1,3,5-TRIAZINE + TRIFLUOROACETIC ANHYDRIDE: Explosive reaction. TRIAZINE: Violently explosive reaction. TRICADMIUM DIPHOSPHIDE: Explosive reaction. TRIETHYLGALLIUM MONOETHYL ETHER COMPLEX: Ignition reaction. TRIMETHYLTRIOXANE: Intense reaction. TRIS(IODOMERCURI)PHOSPHINE: Violent decomposition. TRITHIOACETONE: Explosive reaction. TURPENTINE: Explosive mixture. UNSYMMETRICAL DIMETHYL HYDRAZINE: Spontaneous ignition. URANIUM: Explosive reaction. URANIUM ALLOY: Violent reaction. URANIUM DISULFIDE: Violent reaction. URANIUM-NEODYMIUM ALLOYS: Explosive reaction. VINYL ACETATE: Temperature and pressure increase in closed container. VINYLIDENE CHLORIDE: Temperature and pressure increase in closed container. WOOD: Possible ignition. P-

XYLENE: Intense reaction in presence of sulfuric acid. ZINC: Incandescent reaction. ZINC ETHOXIDE: Possible explosion. ZIRCONIUM-URANIUM ALLOYS: Explosive reaction.

Hazardous Decomposition Products
oxides of nitrogen

Thermal decomposition products: oxides of nitrogen.

Possibility of Hazardous Reactions
Will not polymerize.

---

* * * Section 11 - TOXICOLOGICAL INFORMATION * * *

Component Analysis - LD50/LC50

The components of this material have been reviewed in various sources and the following selected endpoints are published:
NITRIC ACID (7697-37-2)
Inhalation LC50Rat 67 ppm 4 h

RTECS Acute Toxicity (selected)

The components of this material have been reviewed, and RTECS publishes the following endpoints:

NITRIC ACID	7697-37-2
Inhalation:	67 ppm/4 hour Inhalation Rat LC50; 130 mg/m3/4 hour Inhalation Rat LC50; 260 mg/m3/30 minute(s) Inhalation Rat LC50
WATER	7732-18-5
Oral:	>90 mL/kg Oral Rat LD50

Acute Toxicity Level

NITRIC ACID (7697-37-2)
Highly Toxic:
inhalation

Component Carcinogenicity
None of this product's components are listed by ACGIH, IARC, NTP, DFG or OSHA

RTECS Irritation

The components of this material have been reviewed and RTECS publishes no data as of the date on this document

Local Effects

NITRIC ACID (7697-37-2)
Corrosive:
inhalation, skin, eye, ingestion

Medical Conditions Aggravated by Exposure
eye disorders, respiratory disorders, skin disorders and allergies,

RTECS Reproductive Effects

The components of this material have been reviewed, and RTECS publishes the following endpoints:
NITRIC ACID (7697-37-2)
21150 mg/kg Oral Rat TDLo (pregnant 1-21 day(s)); 2345 mg/kg Oral Rat TDLo (pregnant 18 day (s))

Inhalation - Acute Exposure
NITRIC ACID: Inhalation of acidic substances may cause severe respiratory irritation with coughing, choking, and possibly yellowish burns of the mucous membranes Other initial symptoms may include dizziness, headache, nausea, and weakness Pulmonary edema may be immediate in the most severe exposures, but more likely will occur after a latent period of 5-72 hours The symptoms may include tightness in the chest, dyspnea, dizziness, frothy sputum, and cyanosis Physical findings may include hypotension, weak, rapid pulse, moist rales, and hemoconcentration In non-fatal cases, complete recovery may occur within a few days or weeks or, convalescence may be prolonged with frequent relapses and continued dyspnea and other signs and symptoms of pulmonary insufficiency In severe exposures, death due to anoxia may occur within a few hours after onset of the symptoms of pulmonary edema or following a relapse.

Inhalation - Chronic Exposure
NITRIC ACID: Depending on the concentration and duration of exposure, repeated or prolonged exposure to an acidic substance may cause erosion of the teeth, inflammatory and ulcerative changes in the mouth, and possibly jaw necrosis Bronchial irritation with cough and frequent attacks of bronchial pneumonia may occur Gastrointestinal disturbances are also possible.

Skin Contact - Acute Exposure
NITRIC ACID: Direct contact with liquid or vapor may cause severe pain, burns and possibly yellowish stains Burns may be deep with sharp edges and heal slowly with scar tissue formation Dilute solutions of nitric acid may produce mild irritation and harden the epidermis without destroying it Concentrated acid solutions applied to over 25% of the skin area in rats produced elevated methemoglobin and blood nitrate levels.

Skin Contact - Chronic Exposure
NITRIC ACID: Effects depend on the concentration and duration of exposure Repeated or prolonged contact with acidic substances may result in dermatitis or effects similar to acute exposure.

Eye Contact - Acute Exposure
NITRIC ACID: Direct contact with acidic substances may cause pain and lacrimation, photophobia, and burns, possibly severe The degree of injury depends on the concentration and duration of contact In mild burns, the epithelium regenerates rapidly and the eye recovers completely In severe cases, the extent of injury may not be fully apparent for several weeks Ultimately, the whole cornea may become deeply vascularized and opaque resulting in blindness In the worst cases, the eye may be totally destroyed Concentrated nitric acid may impart a yellow color to the eye upon contact.

Eye Contact - Chronic Exposure
NITRIC ACID: Effects depend on the concentration and duration of exposure Repeated or prolonged exposure to acidic substances may cause conjunctivitis or effects as in acute exposure.

Ingestion - Acute Exposure
NITRIC ACID: Acidic substances may cause circumoral burns with yellow discoloration and corrosion of the mucous membranes of the mouth, throat and esophagus There may be immediate pain and difficulty or inability to swallow or speak Epiglottal edema may result in respiratory distress and possibly asphyxia Marked thirst, epigastric pain, nausea, vomiting and diarrhea may occur Depending on the degree of espohageal and gastric corrosion, the vomitus may contain fresh or dark precipitated blood and large shreds of mucosa Shock with marked hypotension, weak, rapid pulse, shallow respiration, and clammy skin may occur Circulatory collapse may ensue and if uncorrected, lead to renal failure In severe cases, gastric, and to a lesser degree, esophageal perforation and subsequent peritonitis may occur and be accompanied by fever and abdominal rigidity Esophageal, gastric anc pyloric stricture may occur within a few weeks, but may be delayed for months or even years Death may result within a short time from asphyxia, circulatory collapse or aspiration of even minute amounts Later death may be due to peritonitis, severe nephritis or pneumonia Coma and convulsions sometimes occur terminally.

Ingestion - Chronic Exposure
NITRIC ACID: Depending on the concentration, repeated ingestion of acidic substances may result in inflammatory and ulcerative changes in the mucous membranes of the mouth and other effects as in acute ingestion Reproductive effects have been reported in animals.

---

* * * Section 12 - ECOLOGICAL INFORMATION * * *

Component Analysis - Aquatic Toxicity

No LOLI ecotoxicity data are available for this product's components

---

* * * Section 13 - DISPOSAL CONSIDERATIONS * * *

Disposal Methods
Dispose in accordance with all applicable regulations. Subject to disposal regulations: U.S. EPA 40 CFR 262. Hazardous Waste Number(s): D001. D002.

Component Waste Numbers

The U.S. EPA has not published waste numbers for this product's components

---

* * * Section 14 - TRANSPORT INFORMATION * * *

US DOT Information:
Shipping Name: NITRIC ACID
Hazard Class: 8
UN/NA #: UN2031
Packing Group: II
Required Label(s): 8

TDG Information:
Shipping Name: NITRIC ACID
Hazard Class: 8
UN#: UN2031
Packing Group: II
Required Label(s): 8

ADR Information:
Shipping Name: NITRIC ACID
Hazard Class: 8
UN#: UN2031
Packing Group: II
Required Label(s): 8

ADR Tunnel Code Restrictions

This list contains tunnel restriction codes for those substances and/or chemically related entries which are found in chapter 3.2 of the ADR regulations
NITRIC ACID (7697-37-2)
Restriction(s): E [UN2031] (I); E [UN2031] (II); C/D [UN2032] (I, red fuming)

RID Information:
Shipping Name: NITRIC ACID
Hazard Class: 8
UN#: UN2031
Packing Group: II
Required Label(s): 8

IATA Information:
Shipping Name: NITRIC ACID
Hazard Class: 8
UN#: UN2031
Packing Group: II
Required Label(s): 8

ICAO Information:
Shipping Name: NITRIC ACID
Hazard Class: 8
UN#: UN2031
Packing Group: II
Required Label(s): 8

IMDG Information:
Shipping Name: NITRIC ACID
Hazard Class: 8
UN#: UN2031
Packing Group: II

Component Marine Pollutants (IMDG)

Not regulated as dangerous goods.

---

* * * Section 15 - REGULATORY INFORMATION * * *

US Federal Regulations

This material contains one or more of the following chemicals required to be identified under SARA Section 302 (40 CFR 355 Appendix A), SARA Section 311/312 (40 CFR 370.21), SARA Section 313 (40 CFR 372.65), CERCLA (40 CFR 302.4), TSCA 12(b), and/or require an OSHA process safety plan

NITRIC ACID	7697-37-2
SARA 302:	1000 lb TPQ
SARA 313:	1 % de minimis concentration
CERCLA:	1000 lbfinal RQ; 454 kgfinal RQ
OSHA (safety):	500 lb TQ >=94.5% by weight)
SARA 304:	1000 lb EPCRA RQ

SARA Section 311/312 (40 CFR 370 Subparts B and C)

Acute Health: Yes **Chronic Health:** No **Fire:** Yes **Pressure:** No **Reactivity:** No

U.S. State Regulations

The following components appear on one or more of the following state hazardous substances lists:

Component	CAS	CA	MA	MN	NJ	PA
NITRIC ACID	7697-37-2	Yes	Yes	Yes	Yes	Yes

Not listed under California Proposition 65

Canadian WHMIS Ingredient Disclosure List (IDL)

Components of this material have been checked against the Canadian WHMIS Ingredients Disclosure List. The List is composed of chemicals which must be identified on MSDSs if they are included in products which meet WHMIS criteria specified in the Controlled Products Regulations and are present above the threshold limits listed on the IDL

NITRIC ACID	7697-37-2
	1 %

Germany Water Classification

NITRIC ACID (7697-37-2)
ID Number 414 , hazard class 1 - low hazard to waters (except fuming)

Symbol(s)
C Corrosive
Risk Phrases
R35 Causes severe burns.
Safety Phrases
S1/2 Keep locked up and out of the reach of children.
S23 Do not breathe gas/fumes/vapour/spray.
S26 In case of contact with eyes, rinse immediately with plenty of water and seek medical advice.
S36 Wear suitable protective clothing.
S45 In case of accident or if you feel unwell, seek medical advice immediately (show the label where possible).

Component Analysis - Inventory

Component	CAS#	US	CA	EU	AU	PH	JP	KR	CN	NZ
NITRIC ACID	7697-37-2	Yes	DSL	EIN	Yes	Yes	Yes	Yes	Yes	Yes
WATER	7732-18-5	Yes	DSL	EIN	Yes	Yes	No	Yes	Yes	Yes

Globally Harmonized System of Classification and Labeling (GHS)

The listed component(s) of this material have been checked for country-specific published classifications according to the Globally Harmonized System of Classification and Labeling (GHS). The results of the queries are displayed below. Please see the individual country listings, as additional interpretations or reference information may be available. For a reference list of H- or P-statements, please visit ChemADVISOR's website at http://www.chemadvisor.com/product-resources/26-pure-substance-and-mixture-databases/247-ghs-hazard-and-physical-statements

Australia GHS Classifications No published information availableThis material may be hazardous according to published criteria for classification

European Union GHS Classifications

Classifications below according to Regulation (EC) No 1272/2008 on classification, labeling and packaging of substances and mixtures (CLP)
NITRIC ACID (7697-37-2)
Oxidizing liquidsCategory 3 H272 May intensify fire, oxidizer
Skin corrosion/irritationCategory 1A H314 Causes severe skin burns and eye damage

European Union GHS Labeling Information

Labeling information below is according to Regulation (EC) No 1272/2008 on classification, labeling and packaging of substances and mixtures (CLP)
NITRIC ACID (7697-37-2)
Symbol(s)

Signal WordDanger
Hazard(s)
H272 May intensify fire, oxidizer
H314 Causes severe skin burns and eye damage
Prevention
P210 Keep away from heat/sparks/open flames/hot surfaces. - No smoking
P220 Keep/Store away from clothing/combustible materials
P280 Wear protective gloves/protective clothing/eye protection/face protection
P260 Do not breathe dust/fume/gas/mist/vapours/spray
P264 Wash thoroughly after handling
Response
P304+P340 IF INHALED: Remove victim to fresh air and keep at rest in a position comfortable for breathing
P305+P351+P338 IF IN EYES: Rinse cautiously with water for several minutes. Remove contact lenses, if present and easy to do. Continue rinsing
P310 Immediately call a POISON CENTER or doctor/physician
P303+P361+P353 IF ON SKIN (or hair): Remove/Take off immediately all contaminated clothing. Rinse skin with water/shower
P363 Wash contaminated clothing before reuse
P301+P330+P331 IF SWALLOWED: Rinse mouth. Do NOT induce vomiting
P321 Specific treatment (see label)
P370+P378 In case of fire: Use appropriate media for extinction
Storage
P405 Store locked up
Disposal
P501 Dispose of contents/container in accordance with local/regional/national/international regulations

Indonesia GHS Classifications No published information availableThis material may be hazardous according to published criteria for classification

Japan GHS Classifications

Classifications below published under Japan's Chemicals Classification Program according to the Globally Harmonized System of Classification and Labeling of Chemicals (GHS)
NITRIC ACID (7697-37-2)
Oxidizing liquidsCategory 3 H272 May intensify fire, oxidizerApproval: 00597
Acute toxicityInhalation - Dust and MistCategory 2 H330 Fatal if inhaledApproval: 597
Skin corrosion/irritationCategory 1A H314 Causes severe skin burns and eye damageApproval: 00597

Serious Eye Damage/Eye IrritationCategory 1 H318 Causes serious eye damageApproval: 00597
Specific target organ toxicity - Single exposureCategory 1 H370 Causes damage to organs (respiratory system) Approval: 00597
Specific target organ toxicity - Repeated exposureCategory 1 H372 Causes damage to organs through prolonged or repeated exposure (respiratory system,teeth) Approval: 00597
Aspiration hazardCategory 1 H304 May be fatal if swallowed and enters airwaysApproval: 00597

Japan GHS Labeling Information

Labeling information below according to classifications published by Japan's Chemicals Classification Program according to the Globally Harmonized System of Classification and Labeling of Chemicals (GHS)
NITRIC ACID (7697-37-2)
Symbol(s)

Signal WordDanger
Hazard(s)
H272 May intensify fire, oxidizer
H330 Fatal if inhaled
H314 Causes severe skin burns and eye damage
H318 Causes serious eye damage
H370 Causes damage to organs
H372 Causes damage to organs through prolonged or repeated exposure
H304 May be fatal if swallowed and enters airways
Prevention
P210 Keep away from heat/sparks/open flames/hot surfaces. - No smoking
P220 Keep/Store away from clothing/combustible materials
P271 Use only outdoors or in a well-ventilated area
P280 Wear protective gloves/protective clothing/eye protection/face protection
P284 Wear respiratory protection
P260 Do not breathe dust/fume/gas/mist/vapours/spray
P264 Wash thoroughly after handling
P270 Do not eat, drink or smoke when using this product
Response
P308+P313 IF exposed or concerned: Get medical advice/attention
P304+P340 IF INHALED: Remove victim to fresh air and keep at rest in a position comfortable for breathing
P310 Immediately call a POISON CENTER or doctor/physician
P305+P351+P338 IF IN EYES: Rinse cautiously with water for several minutes. Remove contact lenses, if present and easy to do. Continue rinsing
P310 Immediately call a POISON CENTER or doctor/physician
P303+P361+P353 IF ON SKIN (or hair): Remove/Take off immediately all contaminated clothing. Rinse skin with water/shower
P363 Wash contaminated clothing before reuse
P301+P310 IF SWALLOWED: Immediately call a POISON CENTER or doctor/physician

P301+P330+P331 IF SWALLOWED: Rinse mouth. Do NOT induce vomiting
P320 Specific treatment is urgent (see label)
P331 Do NOT induce vomiting
P370+P378 In case of fire: Use appropriate media for extinction
Storage
P403+P233 Store in a well-ventilated place. Keep container tightly closed
P405 Store locked up
Disposal
P501 Dispose of contents/container in accordance with local/regional/national/international regulations

Korea GHS Classifications (SV)

Classifications below published by Korea's Ministry of Environment (MOE), Ministry of Employment and Labor (MOEL) or Office of National Emergency Management (NEMA, physical hazards only)
NITRIC ACID (7697-37-2)

MOE:	Oxidizing liquidsCategory 1 H271 May cause fire or explosion, strong oxidizer Skin corrosion/irritationCategory 1 H314 Causes severe skin burns and eye damage
MOEL:	Oxidizing liquidsCategory 3 H272 May intensify fire, oxidizer Acute toxicityInhalation - Dust and MistCategory 2 H330 Fatal if inhaled Skin corrosion/irritationCategory 1 H314 Causes severe skin burns and eye damage Serious Eye Damage/Eye IrritationCategory 1 H318 Causes serious eye damage Specific target organ toxicity - Single exposureCategory 1 H370 Causes damage to organsrespiratory system Specific target organ toxicity - Repeated exposureCategory 1 H372 Causes damage to organs through prolonged or repeated exposurerespiratory system,teeth Aspiration hazardCategory 1 H304 May be fatal if swallowed and enters airways
NEMA:	Oxidizing liquidsCategory 1 H271 May cause fire or explosion, strong oxidizer

Korea GHS Labeling Information

Labeling information below according to classifications published by Korea's Ministry of Environment (MOE), Ministry of Employment and Labor (MOEL) or Office of National Emergency Management (NEMA, physical hazards only)
NITRIC ACID (7697-37-2)
Symbol(s)

Signal WordDanger
Hazard(s)
H271 May cause fire or explosion, strong oxidizer
H314 Causes severe skin burns and eye damage
Prevention

P210 Keep away from heat/sparks/open flames/hot surfaces. - No smoking
P220 Keep/Store away from clothing/combustible materials
P280 Wear protective gloves/protective clothing/eye protection/face protection
P283 Wear fire/flame resistant/retardant clothing
P260 Do not breathe dust/fume/gas/mist/vapours/spray
P264 Wash thoroughly after handling
Response
P304+P340 IF INHALED: Remove victim to fresh air and keep at rest in a position comfortable for breathing
P305+P351+P338 IF IN EYES: Rinse cautiously with water for several minutes. Remove contact lenses, if present and easy to do. Continue rinsing
P310 Immediately call a POISON CENTER or doctor/physician
P303+P361+P353 IF ON SKIN (or hair): Remove/Take off immediately all contaminated clothing. Rinse skin with water/shower
P306+P360 IF ON CLOTHING: Rinse immediately contaminated clothing and skin with plenty of water before removing clothes
P363 Wash contaminated clothing before reuse
P301+P330+P331 IF SWALLOWED: Rinse mouth. Do NOT induce vomiting
P321 Specific treatment (see label)
P370+P378 In case of fire: Use appropriate media for extinction
P371+P380+P375 In case of major fire and large quantities: Evacuate area. Fight fire remotely due to the risk of explosion
Storage
P405 Store locked up
Disposal
P501 Dispose of contents/container in accordance with local/regional/national/international regulations
Symbol(s)

Signal WordDanger
Hazard(s)
H272 May intensify fire, oxidizer
H330 Fatal if inhaled
H314 Causes severe skin burns and eye damage
H318 Causes serious eye damage
H370 Causes damage to organs
H372 Causes damage to organs through prolonged or repeated exposure
H304 May be fatal if swallowed and enters airways
Prevention
P210 Keep away from heat/sparks/open flames/hot surfaces. - No smoking
P220 Keep/Store away from clothing/combustible materials
P271 Use only outdoors or in a well-ventilated area
P280 Wear protective gloves/protective clothing/eye protection/face protection
P284 Wear respiratory protection
P260 Do not breathe dust/fume/gas/mist/vapours/spray

P264 Wash thoroughly after handling
P270 Do not eat, drink or smoke when using this product
Response
P308+P313 IF exposed or concerned: Get medical advice/attention
P304+P340 IF INHALED: Remove victim to fresh air and keep at rest in a position comfortable for breathing
P310 Immediately call a POISON CENTER or doctor/physician
P305+P351+P338 IF IN EYES: Rinse cautiously with water for several minutes. Remove contact lenses, if present and easy to do. Continue rinsing
P310 Immediately call a POISON CENTER or doctor/physician
P303+P361+P353 IF ON SKIN (or hair): Remove/Take off immediately all contaminated clothing. Rinse skin with water/shower
P363 Wash contaminated clothing before reuse
P301+P310 IF SWALLOWED: Immediately call a POISON CENTER or doctor/physician
P301+P330+P331 IF SWALLOWED: Rinse mouth. Do NOT induce vomiting
P320 Specific treatment is urgent (see label)
P331 Do NOT induce vomiting
P370+P378 In case of fire: Use appropriate media for extinction
Storage
P403+P233 Store in a well-ventilated place. Keep container tightly closed
P405 Store locked up
Disposal
P501 Dispose of contents/container in accordance with local/regional/national/international regulations
Symbol(s)

Signal WordDanger
Hazard(s)
H271 May cause fire or explosion, strong oxidizer
Prevention
P210 Keep away from heat/sparks/open flames/hot surfaces. - No smoking
P220 Keep/Store away from clothing/combustible materials
P280 Wear protective gloves/protective clothing/eye protection/face protection
P283 Wear fire/flame resistant/retardant clothing
Response
P306+P360 IF ON CLOTHING: Rinse immediately contaminated clothing and skin with plenty of water before removing clothes
P370+P378 In case of fire: Use appropriate media for extinction
P371+P380+P375 In case of major fire and large quantities: Evacuate area. Fight fire remotely due to the risk of explosion
Disposal
P501 Dispose of contents/container in accordance with local/regional/national/international regulations

New Zealand GHS Classifications

Classifications below according to the Environmental Risk Management Authority's (ERMA) Hazardous Substances and New Organisms (HSNO) Act, as amended. For a reference list defining the alphanumeric categories, please visit ChemADVISOR's website at www.chemadvisor.com\sdsoncommand\ghs_NZ.html
NITRIC ACID (7697-37-2) Approval: HSR000982
Oxidizing liquidsCategory 3 H272 May intensify fire, oxidizer (red fuming)
Corrosive to MetalsCategory 1 H290 May be corrosive to metals (red fuming)
Acute toxicityInhalation:Category 1 H330 Fatal if inhaled (red fuming)
Skin corrosion/irritationCategory 1A H314 Causes severe skin burns and eye damage (red fuming)
Serious Eye Damage/Eye IrritationCategory 1 H318 Causes serious eye damage (red fuming)
Specific target organ toxicity - Repeated exposureInhalation:Category 2 H373 May cause damage to organs through prolonged or repeated exposure if inhaled (respiratory system,teeth) (red fuming)
Hazardous to aquatic environment - chronic hazardCategory 3 H412 Harmful to aquatic life with long lasting effects (fish) (red fuming)

New Zealand GHS Labeling Information

Labeling information below according to classifications published by New Zealand's Environmental Risk Management Authority's (ERMA) Hazardous Substances and New Organisms (HSNO) Act, as amended. For a reference list defining the alphanumeric categories, please visit ChemADVISOR's website at www.chemadvisor.com\sdsoncommand\ghs_NZ.html
NITRIC ACID (7697-37-2)
Symbol(s)

Signal WordDanger
Hazard(s)
H272 May intensify fire, oxidizer
H290 May be corrosive to metals
H330 Fatal if inhaled
H314 Causes severe skin burns and eye damage
H318 Causes serious eye damage
H373 May cause damage to organs through prolonged or repeated exposure
H412 Harmful to aquatic life with long lasting effects
Prevention
P234 Keep only in original container
P210 Keep away from heat/sparks/open flames/hot surfaces. - No smoking
P220 Keep/Store away from clothing/combustible materials
P271 Use only outdoors or in a well-ventilated area
P280 Wear protective gloves/protective clothing/eye protection/face protection
P284 Wear respiratory protection
P260 Do not breathe dust/fume/gas/mist/vapours/spray
P264 Wash thoroughly after handling
P273 Avoid release to the environment
Response
P304+P340 IF INHALED: Remove victim to fresh air and keep at rest in a position comfortable for

breathing
P310 Immediately call a POISON CENTER or doctor/physician
P305+P351+P338 IF IN EYES: Rinse cautiously with water for several minutes. Remove contact lenses, if present and easy to do. Continue rinsing
P310 Immediately call a POISON CENTER or doctor/physician
P303+P361+P353 IF ON SKIN (or hair): Remove/Take off immediately all contaminated clothing. Rinse skin with water/shower
P363 Wash contaminated clothing before reuse
P301+P330+P331 IF SWALLOWED: Rinse mouth. Do NOT induce vomiting
P310 Immediately call a POISON CENTER or doctor/physician
P320 Specific treatment is urgent (see label)
P370+P378 In case of fire: Use appropriate media for extinction
P390 Absorb spillage to prevent material-damage
Storage
P403+P233 Store in a well-ventilated place. Keep container tightly closed
P405 Store locked up
P406 Store in corrosive resistant container with a resistant inner liner
Disposal
P501 Dispose of contents/container in accordance with local/regional/national/international regulations

South Africa GHS Classifications

Information below presented according to the South African Bureau of Standards (SANS 10234:2008 - Globally Harmonized System (GHS) of Classification and Labeling of Chemicals). The information below identifies substances with recommended GHS classifications by CAS or RR numbers and chemical names; the data field contains the word "Present" along with any clarifying information in parenthesis. NOTE: Due to copyright laws on the standard, we are not able to publish the classification. Details about South Africa's implementation of GHS are available by ordering the Standard and its supplement through the South African Bureau of Standards website
NITRIC ACID (7697-37-2)
Listing: Present (>70% by mass)
Listing: Present (<=70% by mass)

Taiwan GHS Classifications

Information below presented according to Taiwan's Bureau of Standards, Metrology and Inspection (BSMI) of the Ministry of Economic Affairs. This agency has published a series of standards (CNS 15030 1-27 Chemical Classification and Labelling) which provide guidance on classification and labeling of chemicals according to GHS
NITRIC ACID (7697-37-2)

Taiwan:	Oxidizing liquidsCategory 1 H271 May cause fire or explosion, strong oxidizer
	Corrosive to MetalsCategory 1 H290 May be corrosive to metals
	Skin corrosion/irritationCategory 1 H314 Causes severe skin burns and eye damage
	Serious Eye Damage/Eye IrritationCategory 1 H318 Causes serious eye damage
	Specific target organ toxicity - Repeated exposureCategory 2 H373 May cause damage to organs through prolonged or repeated exposure (lungs)

Taiwan GHS Labeling Information

Labeling information below according to classifications published by Taiwan's Bureau of Standards, Metrology and Inspection (BSMI) of the Ministry of Economic Affairs. This agency has published a series of standards (CNS 15030 1-27 Chemical Classification and Labelling) which provide guidance on classification and labeling of chemicals according to GHS
NITRIC ACID (7697-37-2)
Symbol(s)

Signal WordDanger
Hazard(s)
H271 May cause fire or explosion, strong oxidizer
H290 May be corrosive to metals
H314 Causes severe skin burns and eye damage
H318 Causes serious eye damage
H373 May cause damage to organs through prolonged or repeated exposure
Prevention
P234 Keep only in original container
P210 Keep away from heat/sparks/open flames/hot surfaces. - No smoking
P220 Keep/Store away from clothing/combustible materials
P280 Wear protective gloves/protective clothing/eye protection/face protection
P283 Wear fire/flame resistant/retardant clothing
P260 Do not breathe dust/fume/gas/mist/vapours/spray
P264 Wash thoroughly after handling
Response
P304+P340 IF INHALED: Remove victim to fresh air and keep at rest in a position comfortable for breathing
P305+P351+P338 IF IN EYES: Rinse cautiously with water for several minutes. Remove contact lenses, if present and easy to do. Continue rinsing
P310 Immediately call a POISON CENTER or doctor/physician
P303+P361+P353 IF ON SKIN (or hair): Remove/Take off immediately all contaminated clothing. Rinse skin with water/shower
P306+P360 IF ON CLOTHING: Rinse immediately contaminated clothing and skin with plenty of water before removing clothes
P363 Wash contaminated clothing before reuse
P301+P330+P331 IF SWALLOWED: Rinse mouth. Do NOT induce vomiting
P310 Immediately call a POISON CENTER or doctor/physician
P321 Specific treatment (see label)
P370+P378 In case of fire: Use appropriate media for extinction
P371+P380+P375 In case of major fire and large quantities: Evacuate area. Fight fire remotely due to the risk of explosion
P390 Absorb spillage to prevent material-damage
Storage
P405 Store locked up

P406 Store in corrosive resistant container with a resistant inner liner
Disposal
P501 Dispose of contents/container in accordance with local/regional/national/international regulations

Classification
No classification assigned.

---

* * * Section 16 - OTHER INFORMATION * * *

Key / Legend
ACGIH - American Conference of Governmental Industrial Hygienists; ADR - European Road Transport; AU - Australia; BOD - Biochemical Oxygen Demand; C - Celsius; CA - Canada; CAS - Chemical Abstracts Service; CERCLA - Comprehensive Environmental Response, Compensation, and Liability Act; CN - China; CPR - Controlled Products Regulations; DFG - Deutsche Forschungsgemeinschaft; DOT - Department of Transportation; DSL - Domestic Substances List; EEC - European Economic Community; EINECS - European Inventory of Existing Commercial Chemical Substances; EPA - Environmental Protection Agency; EU - European Union; F - Fahrenheit; IARC - International Agency for Research on Cancer; IATA - International Air Transport Association; ICAO - International Civil Aviation Organization; IDL - Ingredient Disclosure List; IDLH - Immediately Dangerous to Life and Health; IMDG - International Maritime Dangerous Goods; JP - Japan; Kow - Octanol/water partition coefficient; KR - Korea; LEL - Lower Explosive Limit; LOLI - List Of LIsts™ - ChemADVISOR's Regulatory Database; MAK - Maximum Concentration Value in the Workplace; MEL - Maximum Exposure Limits; NFPA - National Fire Protection Agency; NIOSH - National Institute for Occupational Safety and Health; NJTSR - New Jersey Trade Secret Registry; NTP - National Toxicology Program; NZ - New Zealand; OSHA - Occupational Safety and Health Administration; PH - Philippines; RCRA - Resource Conservation and Recovery Act; RID - European Rail Transport; RTECS - Registry of Toxic Effects of Chemical Substances®; SARA - Superfund Amendments and Reauthorization Act; STEL - Short-term Exposure Limit; TDG - Transportation of Dangerous Goods; TSCA - Toxic Substances Control Act; TWA - Time Weighted Average; UEL - Upper Explosive Limit; US - United States

Full text of R phrases in Section 3

R35 Causes severe burns.
R8Contact with combustible material may cause fire.

Other Information
Reasonable care has been taken in the preparation of this information; however, the manufacturer makes no warranty whatsoever including the warranty of merchantability, expressed or implied, with respect to this information. The manufacturer makes no representations and assumes no liability for any direct, incidental, consequential, or other such damages resulting from its use or misuse.

Disclaimer:
Supplier gives no warranty whatsoever, including the warranties of merchantability or of fitness for a particular purpose. Any product purchased is sold on the assumption the purchaser shall determine the quality and suitability of the product. Supplier expressly disclaims any and all liability for incidental, consequential or any other damages arising out of the use or misuse of this product. No information

provided shall be deemed to be a recommendation to use any product in conflict with any existing patent rights. THIS SDS IS TO BE UTILIZED SOLELY AS A REFERENCE DOCUMENT AND IT IS NOT TO BE USED TO SATISFY THE DISTRIBUTION REQUIREMENTS OF OSHA'S HAZARD COMMUNICATION STANDARD (HCS) NOR CANADA'S CONTROLLED PRODUCT REGULATION (CPR). Read the Safety Data Sheet before handling product. Use of any information contained herein is provided at the reader's own risk and thus independent judgment by trained professionals must be utilized at all times.

Copyright
Copyright 1984-2014 ChemADVISOR, Inc "RTECS®" is a United States trademark owned and licensed under authority of the U.S. Government, by and through Accelrys, Inc. Portions ©Copyright 2014, U.S. Government. All rights reserved

MATERIAL SAFETY DATA SHEET

Date Prepared: 07/03/13

I. PRODUCT IDENTIFICATION

Trade Name(s): **Petroset**

Generic Name(s): Bentonite Clay (CAS No. 1302-78-9)

Chemical Name(s): Sodium Montmorillonite (CAS No. 1318-93-0)

Manufacturer: Fluid Tech LLC
Address: 130 N. 12th St.
Montpelier, ID 83254

Telephone Numbers:
Information: (800) 995 - 5691
Emergency: (865) 809 - 9995

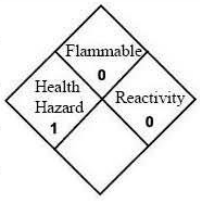

NFPA FIRE HAZARD IDENTIFICATION SYSTEM

II. HAZARDOUS INGREDIENTS

Ingredient	CAS NO.	%	Hazard
Crystalline Silica (SiO_2) as Quartz	14808-60-7	See Note	Low concentrations of crystalline silica (SiO_2) in the form of quartz may be present in airborne bentonite dust. See Section VI for discussion of health hazard.

Note: Although the typical quartz content of bentonite is in the range of 2 to 6% most of the quartz particles are larger than the 10 µ respirable threshold size. The actual respirable quartz concentration in airborne bentonite dust will depend upon bentonite source, fineness of product, moisture content of product, local humidity and wind condition at point of use and other use specific factors.

III. PHYSICAL DATA

Boiling Point (°F): NA	Specific Gravity (H_2O=1): 2.45-2.55
Vapor Pressure (mm. Hg): NA	Melting Point: Approx. 1450°C
Vapor Density (Air = 1): NA	Evaporation Rate (Butyl Acetate = 1): NA
Solubility in Water: Insoluble, forms colloidal suspension.	pH: 8-10 (5% aqueous suspension)
Density (at 20° C): 55-68 lbs./cu.ft. as product.	

Appearance and Odor: Light tan to gray dry powder. No odor.

IV. FIRE AND EXPLOSION DATA

Flash Point: NA	Flammable Limits: LEL: NA UEL: NA

Special Fire Fighting Procedures: NA

Unusual Fire and Explosion Hazards: None. Product will not support combustion.

Extinguishing Media: None for product. Any media can be used for the packaging. Product becomes slippery when wet.

V. REACTIVITY

Stability: Stable

Hazardous Polymerization: None

Incompatibility: None

Hazardous Decomposition Products: None

NA = Not Applicable ND = Not Determined

VI. HEALTH HAZARD INFORMATION

Routes of Exposure and Effects:
Skin: Possible drying resulting in dermatitis.
Eyes: Mechanical irritant.
Inhalation: *Acute* (short term) exposure to dust levels exceeding the PEL may cause irritation of respiratory tract resulting in a dry cough. *Chronic* (long term) exposure to airborne bentonite dust containing respirable size (≤ 10 μm) quartz particles, where respirable quartz particle levels are higher than TLV's, may lead to development of silicosis or other respiratory problems. Persistent dry cough and labored breathing upon exertion may be symptomatic.
Ingestion: No adverse effects.

Permissible Exposure Limits: (for air contaminants)	OSHA PEL (8hr. TWA)	ACGIH TLV
Bentonite as "Particulates not otherwise regulated" (formerly nuisance dust)		
Total dust	15 mg/m^3	ND
Respirable dust	5 mg/m^3	ND
Crystalline Silica: Quartz (respirable)	$\frac{10\ mg/m^3}{\%\ Silica + 2}$	0.025 mg/m^3

Carcinogenicity: Bentonite is not listed by ACGIH, IARC, NTP or OSHA. IARC, 1997, concludes that there is sufficient evidence in humans for the carcinogenicity of inhaled crystalline silica from occupational sources (IARC Class 1), that carcinogenicity was not detected in all industrial circumstances studied and that carcinogenicity may depend on characteristics of the crystalline silica or on external factors affecting its biological activity. NTP classifies respirable crystalline silica as "known to be a human carcinogen" (NTP 9th Report on Carcinogens – 2000). ACGIH classifies crystalline silica, quartz, as a suspected human carcinogen (A2).

Acute Oral LD_{50}: ND	Acute Dermal LD_{50}: ND	Aquatic Toxicology LC_{50}: ND

Emergency and First Aid Procedures:
Skin: Wash with soap and water until clean.
Eyes: Flush with water until irritation ceases.
Inhalation: Move to area free from dust. If symptoms of irritation persist contact physician. Inhalation may aggravate existing respiratory illness.

VII. HANDLING AND USE PRECAUTIONS

Steps to be Taken if Material is Released or Spilled: Avoid breathing dust; wear respirator approved for silica bearing dust. Vacuum up to avoid generating airborne dust. Avoid using water. Product slippery when wetted.

Waste Disposal Methods: Product should be disposed of in accordance with applicable local, state and federal regulations.

Handling and Storage Precautions: Use NIOSH/MSHA respirators approved for silica bearing dust when free silica containing airborne bentonite dust levels exceed PEL/TLV's. Clean up spills promptly to avoid making dust. Storage area floors may become slippery if wetted.

VIII. INDUSTRIAL HYGIENE CONTROL MEASURES

Ventilation Requirements: Mechanical, general room ventilation. Use local ventilation to maintain PEL's/TLV's.

Respirator: Use respirators approved by NIOSH/MSHA for silica bearing dust.

Eye Protection: Generally not necessary. Personal preference.

Gloves: Generally not necessary. Personal preference.

Other Protective Clothing or Equipment: None

IX. SPECIAL PRECAUTIONS

Avoid prolonged inhalation of airborne dust.

DEPARTMENT OF TRANSPORTATION HAZARDOUS MATERIAL INFORMATION

Shipping Name: NA (Not Regulated)	Hazard Class: NA
Hazardous Substance: NA	Caution Labeling: NA

All information presented herein is believed to be accurate; however, it is the user's responsibility to determine in advance of need that the information is current and suitable for their circumstances. No warranty or guarantee, expressed or implied is made by Fluid Tech as to this information, or as to the safety, toxicity or effect of the use of this product.

Safety Data Sheet:
Material Name: SODIUM HYDROXIDE
SDS ID: ohs21300
Issue Date: 2014-12-15
Revision: 2.03

Other Sections
01 02 03 04 05 06 07 08 09 10 11 12 13 14 15 16

* * * Section 1 - PRODUCT AND COMPANY IDENTIFICATION * * *

Material Name:
SODIUM HYDROXIDE

ChemADVISOR, Inc.
Stone Quarry Crossing 811 Camp Horne Road, Suite 220 Pittsburgh, PA 15237
E-mail: info@chemadvisor.com
MSDS is for reference use only; please contact manufacturer for emergency response information, routine product inquiries and orders.

Chemical Family
inorganic bases

Synonyms
CAUSTIC SODA; SODA LYE; LYE; WHITE CAUSTIC; CAUSTIC SODA, BEAD; CAUSTIC SODA, DRY; CAUSTIC SODA, FLAKE; CAUSTIC SODA, GRANULAR; CAUSTIC SODA, SOLID; SODIUM HYDRATE; SODIUM HYDROXIDE (Na(OH)); SODIUM HYDROXIDE, FLAKE; SODIUM HYDROXIDE, DRY; SODIUM HYDROXIDE, SOLID; SODIUM HYDROXIDE, DRY SOLID, FLAKE, BEAD, OR GRANULAR; UN 1823; NaOH

* * * Section 2 - HAZARDS IDENTIFICATION * * *

Emergency Overview

Color: white or off-white

Change in color: hygroscopic

Physical Form: beads, pellets, flakes

Odor: odorless

Health Hazards: harmful if swallowed, respiratory tract burns, skin burns, eye burns, mucous membrane burns

Physical Hazards: May react on contact with water.

Potential Health Effects

Inhalation
Short Term: burns

Long Term: burns

Skin Contact
Short Term: burns

Long Term: burns

Eye Contact
Short Term: burns

Long Term: burns

Ingestion
Short Term: burns

Long Term: burns

---

* * * Section 3 - COMPOSITION / INFORMATION ON INGREDIENTS * * *

CAS EC No Registration No	Component Name Synonyms	67/548/EEC (DSD)	1272/2008 (CLP)	Percent
1310-73-2 215-185-5 --	SODIUM HYDROXIDE	C; R:35	Skin Corr. 1A - H314	100

---

* * * Section 4 - FIRST AID MEASURES * * *

Inhalation
If adverse effects occur, remove to uncontaminated area. Give artificial respiration if not breathing. If breathing is difficult, oxygen should be administered by qualified personnel. Get immediate medical attention.

Skin
Wash skin with soap and water for at least 15 minutes while removing contaminated clothing and shoes. Get immediate medical attention. Thoroughly clean and dry contaminated clothing before reuse. Destroy contaminated shoes.

Eyes
Immediately flush eyes with plenty of water for at least 15 minutes. Then get immediate medical attention.

Ingestion
If swallowed, drink plenty of water, do NOT induce vomiting. Get immediate medical attention.

Note to Physicians
For inhalation, consider oxygen. Avoid gastric lavage or emesis.

---

* * * Section 5 - FIRE FIGHTING MEASURES * * *

See Section 9 for Flammability Properties

NFPA Ratings:
Health: 3 Fire: 0 Reactivity: 1
Hazard Scale: 0 = Minimal 1 = Slight 2 = Moderate 3 = Serious 4 = Severe

Flammable Properties
Negligible fire hazard.

Extinguishing Media
regular dry chemical, carbon dioxide, water, regular foam Large fires: Use regular foam or flood with fine water spray.

Fire Fighting Measures
Move container from fire area if it can be done without risk. Cool containers with water spray until well after the fire is out. Stay away from the ends of tanks. Use extinguishing agents appropriate for surrounding fire. Flood with fine water spray. Avoid inhalation of material or combustion by-products. Stay upwind and keep out of low areas.

---

* * * Section 6 - ACCIDENTAL RELEASE MEASURES * * *

Occupational spill/release
Do not touch spilled material. Stop leak if possible without personal risk. Reduce vapors with water

spray. Small spills: Absorb with sand or other non-combustible material. Collect spilled material in appropriate container for disposal. Large spills: Dike for later disposal. Keep unnecessary people away, isolate hazard area and deny entry. Notify Local Emergency Planning Committee and State Emergency Response Commission for release greater than or equal to RQ (U.S. SARA Section 304). If release occurs in the U.S. and is reportable under CERCLA Section 103, notify the National Response Center at (800)424-8802 (USA) or (202)426-2675 (USA).

* * * Section 7 - HANDLING AND STORAGE * * *

Handling Procedures
Use methods to minimize dust.

Storage Procedures
Store and handle in accordance with all current regulations and standards. Store in a cool, dry place. Store in a well-ventilated area. Keep separated from incompatible substances. Keep dry. Store in a tightly closed container. Store with bases.

* * * Section 8 - EXPOSURE CONTROLS / PERSONAL PROTECTION * * *

Component Exposure Limits

SODIUM HYDROXIDE	1310-73-2
ACGIH:	2 mg/m3 Ceiling
NIOSH:	2 mg/m3 Ceiling
	10 mg/m3 IDLH
OSHA (US):	2 mg/m3 TWA
Mexico:	2 mg/m3 Ceiling

Component Analysis
Biological limit value
There are no biological limit values for any of this product's components.

Ventilation
Provide local exhaust or process enclosure ventilation system. Ensure compliance with applicable exposure limits.

PERSONAL PROTECTIVE EQUIPMENT
Eyes/Face Wear splash resistant safety goggles with a faceshield. Provide an emergency eye wash fountain and quick drench shower in the immediate work area.

Protective Clothing
Wear appropriate chemical resistant clothing.

Glove Recommendations
Wear appropriate chemical resistant gloves.

Respiratory Protection
The following respirators and maximum use concentrations are drawn from NIOSH and/or OSHA. 10 mg/m3 Any supplied-air respirator operated in a continuous-flow mode. Any air-purifying, full-facepiece respirator equipped with an N100, R100, or P100 filter. Any powered, air-purifying respirator with a high-efficiency particulate filter. Any self-contained breathing apparatus with a full facepiece. Any supplied-air respirator with a full facepiece. Emergency or planned entry into unknown concentrations or IDLH conditions - Any self-contained breathing apparatus that has a full facepiece and is operated in a pressure-demand or other positive-pressure mode. Any supplied-air respirator with a full facepiece that is operated in a pressure-demand or other positive-pressure mode in combination with an auxiliary self-contained breathing apparatus operated in pressure-demand or other positive-pressure mode. Escape - Any air-purifying, full-facepiece respirator equipped with an N100, R100, or P100 filter. Any appropriate escape-type, self-contained breathing apparatus.

---

* * * Section 9 - PHYSICAL AND CHEMICAL PROPERTIES * * *

Appearance	Not available	**Physical State**	Solid
Odor	odorless	**Color**	white or off-white
Odor Threshold	Not available	**pH**	14
Melting Point	318 °C	**Boiling Point**	1390 °C
Freezing point	Not available	**Evaporation Rate**	Not available
Boiling Point Range	Not available	**Flammability (solid, gas)**	Not available
Autoignition	Not available	**Flash Point**	Not available
Lower Explosive Limit	Not available	**Decomposition**	Not available
Upper Explosive Limit	Not available	**Vapor Pressure**	100 mmHg at 1111 °C
Vapor Density (air=1)	Not available	**Specific Gravity (water=1)**	Not available
Water Solubility	1.11 g/mL	**Partition coefficient: n-octanol/water**	Not available
Viscosity	Not available	**Solubility (Other)**	Not available
Change in color	hygroscopic	**Density**	2.13 g/cc
pH Solution	5 %	**Physical Form**	beads, pellets, flakes
Texture	slippery to touch	**Molecular Formula**	Na-O-H
Molecular Weight	39.997		

Solvent Solubility

Soluble
alcohol, glycerol

Insoluble
acetone, ether

* * * Section 10 - STABILITY AND REACTIVITY * * *

Chemical Stability
May react with evolution of heat on contact with water.

Conditions to Avoid
Avoid heat, flames, sparks and other sources of ignition. Dangerous gases may accumulate in confined spaces. May ignite or explode on contact with combustible materials.

Incompatible Materials
combustible materials, acids, halo carbons, metals, halogens, oxidizing materials, peroxides, metal salts,

SODIUM HYDROXIDE: ACETALDEHYDE: May result in violent polymerization. ACETIC ACID: Mixing in closed container increases temperature and pressure. ACETIC ANHYDRIDE: Mixing in a closed container increases temperature and pressure. ACIDS: May react violently. ACROLEIN: May result in an extremely violent polymerization. ACRYLONITRILE: May cause violent polymerization. ALLYL ALCOHOL + BENZENE SULFONYL CHLORIDE: Possible explosion hazard. ALLYL CHLORIDE: Hydrolyzes. ALUMINUM: Vigorous reaction. ALUMINUM, ARSENIC TRIOXIDE, SODIUM ARSENATE: May generate flammable hydrogen gas. AMMONIA + SILVER NITRATE: Precipitation of explosive silver nitride may occur. AMMONIUM SALTS: May react violently evolving ammonia gas. BENZENE-1,4-DIOL: Exothermic reaction. N,N'-BIS(TRINITROETHYL)UREA: Formation of explosive compound. BROMINE: Possible explosion if not stirred continously. CHLORINE TRIFLUORIDE: May cause violent reaction. CHLOROFORM + METHYL ALCOHOL: Exothermic reaction. CHLOROHYDRIN: Mixing in a closed container causes an increase in temperature and pressure. 4-CHLORO-2-METHYLPHENOL: Possible ignition. CHLORONITROTOLUENES: Possible explosion. CHLOROPICRIN: May cause violent reaction. CHLOROSULFONIC ACID: Mixing in a closed container causes an increase in temperature and pressure. CINNAMALDEHYDE: Exothermic reaction. COATINGS: May be attacked. COPPER: Solutions may slowly corrode. CYANOGEN AZIDE: May form sodium 5-azidotetrazolide, which is explosive if isolated. 2,2-DICHLORO-3,3-DIMETHYLBUTANE: Hazardous reaction. 1,2-DICHLOROETHYLENE: May form spontaneously flammable monochloroacetylene. DIBORANE AND OCTANAL OXIME: Exothermic reaction. ETHYLENE CYANOHYDRIN: Mixing in a closed container causes an increase in temperature and pressure. FLAMMABLE LIQUIDS: Fire and explosion hazard. GLYCOLS: May cause exothermic decomposition with evolution of hydrogen gas. GLYOXAL: Mixing in a closed container increases temperature and pressure. HALOGENATED HYDROCARBONS: Violent reaction. HYDROCHLORIC ACID: Mixing in a closed container causes an increase in temperature and pressure. HYDROFLUORIC ACID: Mixing in a closed container causes an increase in temperature and pressure. HYDROQUINONE: Rapid decomposition of

hydroquinone with evolution of heat. IRON: Solutions may slowly corrode. LEAD: May be attacked; flammable hydrogen gas may be liberated. LEATHER: May be attacked. MALEIC ANHYDRIDE: Explosive decomposition. METALS: Corrodes metals, reacting to form flammable hydrogen gas. 4-METHYL-2-NITROPHENOL: Exothermic reaction. NITRIC ACID: Mixing in closed container increases temperature and pressure. NITROBENZENE: Possibly explosive reaction upon heating in presence of water. NITROETHANE: Forms an explosive salt. NITROMETHANE: Forms an explosive salt. NITROPARAFFINS: The nitroparaffins, in the presence of water, form dry salts with organic bases. The dry salts are explosive. NITROPROPANE: Forms an explosive salt. O-NITROTOLUENE: Possible explosion. OLEUM: Mixing in a closed container causes an increase in temperature and pressure. ORGANIC PEROXIDES: Incompatible. PENTOL (3-METHYL-2-PENTENE-4-YN-1-OL): Possible explosion. PHOSPHORUS: May form mixed phosphines which may ignite spontaneously in air. PHOSPHORUS PENTOXIDE: May react violently when heated. PLASTICS: May be attacked. B-PROPIOLACTONE: Mixing in a closed container causes an increase in temperature and pressure. PROPYLENE OXIDE: Ignition or explosion may occur. RUBBER: May be attacked. SODIUM TETRAHYDROBORATE: Dry mixtures with sodium hydroxide containing 15-40% of tetrahydroborate liberate hydrogen explosively at 230-270 C. SULFURIC ACID: Mixing in a closed container causes an increase in temperaure and pressure. 1,2,4,5-TETRACHLOROBENZENE: Violent reaction. TETRACHLOROBENZENE + METHYL ALCOHOL: Possible explosion. TETRACHLOROETHYLENE: Possible explosion. TETRAHYDROFURAN: Serious explosions can occur. TIN: Evolution of hydrogen gas which may form an explosive mixture. 1,1,1-TRICHLOROETHANOL: Explosion may occur. TRICHLOROETHYLENE: Formation of explosive mixtures of dichloroacetylene. TRICHLORONITROMETHANE + METHANOL: May cause violent reaction. WOOL: May be attacked. ZINC (DUST): Fire and explosion hazard. ZIRCONIUM: May cause explosive reaction upon heating.

Hazardous Decomposition Products
oxides of sodium

Thermal decomposition products: sodium monoxide.

Possibility of Hazardous Reactions
Will not polymerize.

---

* * * Section 11 - TOXICOLOGICAL INFORMATION * * *

Component Analysis - LD50/LC50
The components of this material have been reviewed in various sources and the following selected endpoints are published:
SODIUM HYDROXIDE (1310-73-2)
Dermal LD50 Rabbit 1350 mg/kg

RTECS Acute Toxicity (selected)
The components of this material have been reviewed and RTECS publishes no data as of the date on this document

Acute Toxicity Level
SODIUM HYDROXIDE (1310-73-2)

Toxic:
ingestion
Moderately Toxic:
dermal absorption

Component Carcinogenicity
None of this product's components are listed by ACGIH, IARC, NTP, DFG or OSHA

RTECS Irritation
The components of this material have been reviewed, and RTECS publishes the following endpoints:
SODIUM HYDROXIDE (1310-73-2)
2 percent Skin Human mild; 1 percent Eyes Monkey severe; 400 ug Eyes Rabbit mild; 50 ug/24 hour Eyes Rabbit severe; 1 mg/24 hour Eyes Rabbit severe; 1 mg/30 second(s) Eyes Rabbit severe; 1 percent Eyes Rabbit severe; 500 mg/24 hour Skin Rabbit severe

Local Effects
SODIUM HYDROXIDE (1310-73-2)
Corrosive:
inhalation, skin, eye, ingestion

Medical Conditions Aggravated by Exposure
eye disorders, skin disorders and allergies,

RTECS Mutagenic
The components of this material have been reviewed, and RTECS publishes the following endpoints:
SODIUM HYDROXIDE (1310-73-2)
20 mg grasshopper; 10 mmol/L hamster; 16 mmol/L hamster

Inhalation - Acute Exposure
SODIUM HYDROXIDE: Effects due to inhalation of dusts or mist may vary from mild irritation of the nose at 2 mg/m3 to severe pneumonitis depending on the exposure Low concentrations may cause mucous membrane irritation with sore throat, coughing, and dyspnea Intense exposures may result in destruction of mucous membranes and delayed pulmonary edema or pneumonitis Shock may occur.

Inhalation - Chronic Exposure
SODIUM HYDROXIDE: Prolonged exposures to high concentrations of dusts or mists may cause discomfort and ulceration of the nasal passages Repeated exposures of 5000 mg/L were harmless to rats, but 10,000 mg/L led to nervousness, sore eyes, diarrhea, and retarded growth Rats exposed 30 minutes/day to unmeasured concentrations of sodium hydroxide aerosols suffered pulmonary damage after 2-3 months Death occurred in 2 of 10 rats exposed to an aerosol of 40% aqueous sodium hydroxide for 30 minutes, twice a week, for 3 weeks Histopathological examination showed mostly normal lung tissue with foci of enlarged alveolar septae, emphysema, bronchial ulceration, and enlarged lymph adenoidal tissues An epidemiologic study of 291 workers chronically exposed to caustic dusts for 30 years or more found no significant increase in mortality in relation to duration or intensity of such exposures.

Skin Contact - Acute Exposure
SODIUM HYDROXIDE: Upon contact with the skin, damage including redness, cutaneous burns, skin fissures, and white eschars may occur without immediate pain Exposure to solutions as weak as 0.03 N (0.12%) for 1 hour has caused injury to healthy skin With solutions of 0.4-4%, irritation does not occur until after several hours Solutions of 25-50% caused no sensation of irritation within 3 minutes in human subjects Skin biopsies from human subjects having 1 N sodium hydroxide applied to their arms for 15 to 180 minutes showed

progressive changes beginning with dissolution of the cells in the horny layer and progressing through edema to total destruction of the epidermis in 60 minutes A 5% aqueous solution caused severe necrosis to the skin of rabbits when applied for 4 hours Alkalies penetrate the skin slowly The extent of injury depends on the duration of contact If sodium hydroxide is not removed from the skin, severe burns with deep ulceration may occur Exposure to the dust or mist may cause multiple small burns and temporary loss of hair Pathologic findings due to alkalies may include gelatinous, necrotic areas at the site of contact.

Skin Contact - Chronic Exposure
SODIUM HYDROXIDE: Effects are dependent upon concentration and duration of exposure Dermatitis or effects similar to those for acute exposure may occur.

Eye Contact - Acute Exposure
SODIUM HYDROXIDE: Contact may cause disintegration and sloughing of conjunctival and corneal epithelium, corneal opacification, marked edema and ulceration After 7 to 13 days either gradual recovery begins or there is progression of ulceration and corneal opacification Complications of severe eye burns are symblepharon with overgrowth of the cornea by a vascularized membrane, progressive or recurrent corneal ulceration and permanent corneal opacification Blindness may occur.

Eye Contact - Chronic Exposure
SODIUM HYDROXIDE: Effects are dependent upon concentration and duration of exposure Conjunctivitis or effects similar to those for acute exposure may occur.

Ingestion - Acute Exposure
SODIUM HYDROXIDE: Ingestion may cause a burning sensation in the mouth, corrosion of the lips, mouth, tongue and pharynx, and severe esophageal and abdominal pain, vomiting of blood and large pieces of mucosa, and bloody diarrhea Asphyxia can occur from swelling of the throat Mediastinitis, alkalemia, pallor, weak, slow pulse, cardiovascular collapse, shock, coma and death may occur Perforation of the alimentary tract and constrictive scarring may result Esophageal stricture may occur weeks, months, or even years later to make swallowing difficult The estimated fatal dose in man is 5 grams Cases of squamous cell carcinoma of the esophagus have occurred with latent periods of 12 to 42 years after ingestion These cancers were believed to be sequela of tissue destruction and possibly scar formation rather than the result of direct carcinogenic action of sodium hydroxide.

Ingestion - Chronic Exposure
SODIUM HYDROXIDE Depending on the concentration, repeated ingestion of alkaline substances may result in inflammatory and ulcerative effects on the oral mucous membranes and other effects as with acute ingestion.

---

* * * Section 12 - ECOLOGICAL INFORMATION * * *

Component Analysis - Aquatic Toxicity

SODIUM HYDROXIDE	1310-73-2
Fish:	LC50 96 h Oncorhynchus mykiss 45.4 mg/L [static]

---

* * * Section 13 - DISPOSAL CONSIDERATIONS * * *

Disposal Methods
Dispose in accordance with all applicable regulations. Subject to disposal regulations: U.S. EPA 40 CFR 262. Hazardous Waste Number(s): D002.

Component Waste Numbers
The U.S. EPA has not published waste numbers for this product's components

---

* * * Section 14 - TRANSPORT INFORMATION * * *

US DOT Information:
Shipping Name: SODIUM HYDROXIDE, SOLID
Hazard Class: 8
UN/NA #: UN1823
Packing Group: II
Required Label(s): 8

TDG Information:
Shipping Name: SODIUM HYDROXIDE, SOLID
Hazard Class: 8
UN#: UN1823
Packing Group: II
Required Label(s): 8

ADR Information:
Shipping Name: SODIUM HYDROXIDE, SOLID
Hazard Class: 8
UN#: UN1823
Packing Group: II
Required Label(s): 8

ADR Tunnel Code Restrictions
This list contains tunnel restriction codes for those substances and/or chemically related entries which are found in chapter 3.2 of the ADR regulations
SODIUM HYDROXIDE (1310-73-2)
Restriction(s): E [UN1823] (II, solid); E [UN1824] (II, solution); E [UN1824] (III, solution)

RID Information:
Shipping Name: SODIUM HYDROXIDE, SOLID
Hazard Class: 8
UN#: UN1823
Packing Group: II
Required Label(s): 8

IATA Information:
Shipping Name: SODIUM HYDROXIDE, SOLID
Hazard Class: 8
UN#: UN1823
Packing Group: II
Required Label(s): 8

ICAO Information:
Shipping Name: SODIUM HYDROXIDE, SOLID
Hazard Class: 8
UN#: UN1823
Packing Group: II
Required Label(s): 8

IMDG Information:
Shipping Name: SODIUM HYDROXIDE, SOLID
Hazard Class: 8
UN#: UN1823
Packing Group: II

Component Marine Pollutants (IMDG)
Not regulated as dangerous goods.

---

* * * Section 15 - REGULATORY INFORMATION * * *

US Federal Regulations

This material contains one or more of the following chemicals required to be identified under SARA Section 302 (40 CFR 355 Appendix A), SARA Section 311/312 (40 CFR 370.21), SARA Section 313 (40 CFR 372.65), CERCLA (40 CFR 302.4), TSCA 12(b), and/or require an OSHA process safety plan

SODIUM HYDROXIDE	1310-73-2
CERCLA:	1000 lb final RQ; 454 kg final RQ

SARA Section 311/312 (40 CFR 370 Subparts B and C)
Acute Health: Yes **Chronic Health:** No **Fire:** No **Pressure:** No **Reactivity:** Yes

U.S. State Regulations

The following components appear on one or more of the following state hazardous substances lists:

Component	CAS	CA	MA	MN	NJ	PA
SODIUM HYDROXIDE	1310-73-2	Yes	Yes	Yes	Yes	Yes

Not listed under California Proposition 65

Canadian WHMIS Ingredient Disclosure List (IDL)
Components of this material have been checked against the Canadian WHMIS Ingredients Disclosure List. The List is composed of chemicals which must be identified on MSDSs if they are included in products which meet WHMIS criteria specified in the Controlled Products Regulations and are present above the threshold limits listed on the IDL

SODIUM HYDROXIDE	1310-73-2
	1 %

Germany Water Classification
SODIUM HYDROXIDE (1310-73-2)
ID Number 142 , hazard class 1 - low hazard to waters (footnote 8)

Symbol(s)
C Corrosive
Risk Phrases
R35 Causes severe burns.
R34 Causes burns.
R36/38 Irritating to eyes and skin.
Safety Phrases
S1/2 Keep locked up and out of the reach of children.
S26 In case of contact with eyes, rinse immediately with plenty of water and seek medical advice.
S37/39 Wear suitable gloves and eye/face protection.
S45 In case of accident or if you feel unwell, seek medical advice immediately (show the label where possible).

Component Analysis - Inventory

Component	CAS#	US	CA	EU	AU	PH	JP	KR	CN	NZ
SODIUM HYDROXIDE	1310-73-2	Yes	DSL	EIN	Yes	Yes	Yes	Yes	Yes	Yes

Globally Harmonized System of Classification and Labeling (GHS)

The listed component(s) of this material have been checked for country-specific published classifications according to the Globally Harmonized System of Classification and Labeling (GHS). The results of the queries are displayed below. Please see the individual country listings, as additional interpretations or reference information may be available. For a reference list of H- or P-statements, please visit ChemADVISOR's website at http://www.chemadvisor.com/product-resources/26-pure-substance-and-mixture-databases/247-ghs-hazard-and-physical-statements

Australia GHS Classifications
Classifications below published by Australia's Department of Employment and Workplace Relations, through the Office of the Australian Safety and Compensation Council (ASCC)
SODIUM HYDROXIDE (1310-73-2)
Skin corrosion/irritation Category 1A H314 Causes severe skin burns and eye damage

Australia GHS Labeling Information
Labeling information below according to classifications published by Australia's Department of Employment and Workplace Relations, through the Office of the Australian Safety and Compensation Council (ASCC)
SODIUM HYDROXIDE (1310-73-2)

Symbol(s)

Signal Word Danger
Hazard(s)
H314 Causes severe skin burns and eye damage
Prevention
P280 Wear protective gloves/protective clothing/eye protection/face protection
P260 Do not breathe dust/fume/gas/mist/vapours/spray
P264 Wash thoroughly after handling
Response
P304+P340 IF INHALED: Remove victim to fresh air and keep at rest in a position comfortable for breathing
P305+P351+P338 IF IN EYES: Rinse cautiously with water for several minutes. Remove contact lenses, if present and easy to do. Continue rinsing
P310 Immediately call a POISON CENTER or doctor/physician
P303+P361+P353 IF ON SKIN (or hair): Remove/Take off immediately all contaminated clothing. Rinse skin with water/shower
P363 Wash contaminated clothing before reuse
P301+P330+P331 IF SWALLOWED: Rinse mouth. Do NOT induce vomiting
P321 Specific treatment (see label)
Storage
P405 Store locked up
Disposal
P501 Dispose of contents/container in accordance with local/regional/national/international regulations

European Union GHS Classifications
Classifications below according to Regulation (EC) No 1272/2008 on classification, labeling and packaging of substances and mixtures (CLP)
SODIUM HYDROXIDE (1310-73-2)
Skin corrosion/irritation Category 1A H314 Causes severe skin burns and eye damage

European Union GHS Labeling Information
Labeling information below is according to Regulation (EC) No 1272/2008 on classification, labeling and packaging of substances and mixtures (CLP)
SODIUM HYDROXIDE (1310-73-2)
Symbol(s)

Signal Word Danger
Hazard(s)
H314 Causes severe skin burns and eye damage
Prevention
P280 Wear protective gloves/protective clothing/eye protection/face protection
P260 Do not breathe dust/fume/gas/mist/vapours/spray

P264 Wash thoroughly after handling
Response
P304+P340 IF INHALED: Remove victim to fresh air and keep at rest in a position comfortable for breathing
P305+P351+P338 IF IN EYES: Rinse cautiously with water for several minutes. Remove contact lenses, if present and easy to do. Continue rinsing
P310 Immediately call a POISON CENTER or doctor/physician
P303+P361+P353 IF ON SKIN (or hair): Remove/Take off immediately all contaminated clothing. Rinse skin with water/shower
P363 Wash contaminated clothing before reuse
P301+P330+P331 IF SWALLOWED: Rinse mouth. Do NOT induce vomiting
P321 Specific treatment (see label)
Storage
P405 Store locked up
Disposal
P501 Dispose of contents/container in accordance with local/regional/national/international regulations

Indonesia GHS Classifications No published information available This material may be hazardous according to published criteria for classification

Japan GHS Classifications
Classifications below published under Japan's Chemicals Classification Program according to the Globally Harmonized System of Classification and Labeling of Chemicals (GHS)
SODIUM HYDROXIDE (1310-73-2)
Skin corrosion/irritation Category 1 H314 Causes severe skin burns and eye damage Approval: 21B3010
Serious Eye Damage/Eye Irritation Category 1 H318 Causes serious eye damage Approval: 21B3010
Specific target organ toxicity - Single exposure Category 1 H370 Causes damage to organs (respiratory system) Approval: 21B3010
Hazardous to aquatic environment - acute hazard Category 3 H402 Harmful to aquatic life Approval: 21B3010

Japan GHS Labeling Information
Labeling information below according to classifications published by Japan's Chemicals Classification Program according to the Globally Harmonized System of Classification and Labeling of Chemicals (GHS)
SODIUM HYDROXIDE (1310-73-2)
Symbol(s)

Signal Word Danger
Hazard(s)
H314 Causes severe skin burns and eye damage
H318 Causes serious eye damage
H370 Causes damage to organs
H402 Harmful to aquatic life
Prevention
P280 Wear protective gloves/protective clothing/eye protection/face protection
P260 Do not breathe dust/fume/gas/mist/vapours/spray
P264 Wash thoroughly after handling
P270 Do not eat, drink or smoke when using this product

P273 Avoid release to the environment
Response
P308+P313 IF exposed or concerned: Get medical advice/attention
P304+P340 IF INHALED: Remove victim to fresh air and keep at rest in a position comfortable for breathing
P305+P351+P338 IF IN EYES: Rinse cautiously with water for several minutes. Remove contact lenses, if present and easy to do. Continue rinsing
P310 Immediately call a POISON CENTER or doctor/physician
P303+P361+P353 IF ON SKIN (or hair): Remove/Take off immediately all contaminated clothing. Rinse skin with water/shower
P363 Wash contaminated clothing before reuse
P301+P330+P331 IF SWALLOWED: Rinse mouth. Do NOT induce vomiting
P310 Immediately call a POISON CENTER or doctor/physician
P321 Specific treatment (see label)
Storage
P405 Store locked up
Disposal
P501 Dispose of contents/container in accordance with local/regional/national/international regulations

Korea GHS Classifications (SV)
Classifications below published by Korea's Ministry of Environment (MOE), Ministry of Employment and Labor (MOEL) or Office of National Emergency Management (NEMA, physical hazards only)
SODIUM HYDROXIDE (1310-73-2)

MOE:	Corrosive to Metals Category 1 H290 May be corrosive to metals Acute toxicity Dermal Category 4 H312 Harmful in contact with skin Skin corrosion/irritation Category 1 H314 Causes severe skin burns and eye damage
MOEL:	Skin corrosion/irritation Category 1 H314 Causes severe skin burns and eye damage Serious Eye Damage/Eye Irritation Category 1 H318 Causes serious eye damage Specific target organ toxicity - Single exposure Category 1 H370 Causes damage to organs respiratory system

Korea GHS Labeling Information
Labeling information below according to classifications published by Korea's Ministry of Environment (MOE), Ministry of Employment and Labor (MOEL) or Office of National Emergency Management (NEMA, physical hazards only)
SODIUM HYDROXIDE (1310-73-2)
Symbol(s)

Signal Word Danger
Hazard(s)
H290 May be corrosive to metals
H312 Harmful in contact with skin
H314 Causes severe skin burns and eye damage
Prevention
P234 Keep only in original container
P280 Wear protective gloves/protective clothing/eye protection/face protection

P260 Do not breathe dust/fume/gas/mist/vapours/spray
P264 Wash thoroughly after handling
Response
P304+P340 IF INHALED: Remove victim to fresh air and keep at rest in a position comfortable for breathing
P305+P351+P338 IF IN EYES: Rinse cautiously with water for several minutes. Remove contact lenses, if present and easy to do. Continue rinsing
P302+P352 IF ON SKIN: Wash with plenty of soap and water
P310 Immediately call a POISON CENTER or doctor/physician
P312 Call a POISON CENTER or doctor/physician if you feel unwell
P303+P361+P353 IF ON SKIN (or hair): Remove/Take off immediately all contaminated clothing. Rinse skin with water/shower
P362+P364 Take off contaminated clothing and wash it before reuse
P301+P330+P331 IF SWALLOWED: Rinse mouth. Do NOT induce vomiting
P321 Specific treatment (see label)
P390 Absorb spillage to prevent material-damage
Storage
P405 Store locked up
P406 Store in corrosive resistant container with a resistant inner liner
Disposal
P501 Dispose of contents/container in accordance with local/regional/national/international regulations
Symbol(s)

Signal Word Danger
Hazard(s)
H314 Causes severe skin burns and eye damage
H318 Causes serious eye damage
H370 Causes damage to organs
Prevention
P280 Wear protective gloves/protective clothing/eye protection/face protection
P260 Do not breathe dust/fume/gas/mist/vapours/spray
P264 Wash thoroughly after handling
P270 Do not eat, drink or smoke when using this product
Response
P308+P313 IF exposed or concerned: Get medical advice/attention
P304+P340 IF INHALED: Remove victim to fresh air and keep at rest in a position comfortable for breathing
P305+P351+P338 IF IN EYES: Rinse cautiously with water for several minutes. Remove contact lenses, if present and easy to do. Continue rinsing
P310 Immediately call a POISON CENTER or doctor/physician
P303+P361+P353 IF ON SKIN (or hair): Remove/Take off immediately all contaminated clothing. Rinse skin with water/shower
P363 Wash contaminated clothing before reuse
P301+P330+P331 IF SWALLOWED: Rinse mouth. Do NOT induce vomiting
P310 Immediately call a POISON CENTER or doctor/physician
P321 Specific treatment (see label)
Storage
P405 Store locked up

Disposal
P501 Dispose of contents/container in accordance with local/regional/national/international regulations

New Zealand GHS Classifications
Classifications below according to the Environmental Risk Management Authority's (ERMA) Hazardous Substances and New Organisms (HSNO) Act, as amended. For a reference list defining the alphanumeric categories, please visit ChemADVISOR's website at www.chemadvisor.com\sdsoncommand\ghs_NZ.html
SODIUM HYDROXIDE (1310-73-2) Approval: HSR001547
Corrosive to Metals Category 1 H290 May be corrosive to metals
Acute toxicity Oral Category 4 H302 Harmful if swallowed
Acute toxicity Dermal Category 4 H312 Harmful in contact with skin
Skin corrosion/irritation Category 1B H314 Causes severe skin burns and eye damage
Serious Eye Damage/Eye Irritation Category 1 H318 Causes serious eye damage
Hazardous to aquatic environment - acute hazard Category 3 H402 Harmful to aquatic life (crustacean,fish)
Terrestrial Vertebrate Ecotoxicity Category 3 H433 Harmful to terrestrial vertebrates

New Zealand GHS Labeling Information
Labeling information below according to classifications published by New Zealand's Environmental Risk Management Authority's (ERMA) Hazardous Substances and New Organisms (HSNO) Act, as amended. For a reference list defining the alphanumeric categories, please visit ChemADVISOR's website at www.chemadvisor.com\sdsoncommand\ghs_NZ.html
SODIUM HYDROXIDE (1310-73-2)
Symbol(s)

Signal Word Danger
Hazard(s)
H290 May be corrosive to metals
H302 Harmful if swallowed
H312 Harmful in contact with skin
H314 Causes severe skin burns and eye damage
H318 Causes serious eye damage
H402 Harmful to aquatic life
H433 Harmful to terrestrial vertebrates
Prevention
P234 Keep only in original container
P280 Wear protective gloves/protective clothing/eye protection/face protection
P260 Do not breathe dust/fume/gas/mist/vapours/spray
P264 Wash thoroughly after handling
P270 Do not eat, drink or smoke when using this product
P273 Avoid release to the environment
Response
P304+P340 IF INHALED: Remove victim to fresh air and keep at rest in a position comfortable for breathing
P305+P351+P338 IF IN EYES: Rinse cautiously with water for several minutes. Remove contact lenses, if present and easy to do. Continue rinsing
P302+P352 IF ON SKIN: Wash with plenty of soap and water
P310 Immediately call a POISON CENTER or doctor/physician

P312 Call a POISON CENTER or doctor/physician if you feel unwell
P303+P361+P353 IF ON SKIN (or hair): Remove/Take off immediately all contaminated clothing. Rinse skin with water/shower
P362+P364 Take off contaminated clothing and wash it before reuse
P301+P312 IF SWALLOWED: Call a POISON CENTER or doctor/physician if you feel unwell
P301+P330+P331 IF SWALLOWED: Rinse mouth. Do NOT induce vomiting
P310 Immediately call a POISON CENTER or doctor/physician
P321 Specific treatment (see label)
P330 Rinse mouth
P390 Absorb spillage to prevent material-damage
Storage
P405 Store locked up
P406 Store in corrosive resistant container with a resistant inner liner
Disposal
P501 Dispose of contents/container in accordance with local/regional/national/international regulations

South Africa GHS Classifications
Information below presented according to the South African Bureau of Standards (SANS 10234:2008 - Globally Harmonized System (GHS) of Classification and Labeling of Chemicals). The information below identifies substances with recommended GHS classifications by CAS or RR numbers and chemical names; the data field contains the word "Present" along with any clarifying information in parenthesis. NOTE: Due to copyright laws on the standard, we are not able to publish the classification. Details about South Africa's implementation of GHS are available by ordering the Standard and its supplement through the South African Bureau of Standards website
SODIUM HYDROXIDE (1310-73-2)
Listing: Present (solution >=0.5% and <3% by mass)
Listing: Present (solution >=10% by mass)
Listing: Present (solution >=3% and <10% by mass)
Listing: Present (solid)

Taiwan GHS Classifications
Information below presented according to Taiwan's Bureau of Standards, Metrology and Inspection (BSMI) of the Ministry of Economic Affairs. This agency has published a series of standards (CNS 15030 1-27 Chemical Classification and Labelling) which provide guidance on classification and labeling of chemicals according to GHS
SODIUM HYDROXIDE (1310-73-2)

Taiwan:	Corrosive to Metals Category 1 H290 May be corrosive to metals
	Acute toxicity Dermal Category 4 H312 Harmful in contact with skin
	Skin corrosion/irritation Category 1 H314 Causes severe skin burns and eye damage
	Serious Eye Damage/Eye Irritation Category 1 H318 Causes serious eye damage

Taiwan GHS Labeling Information
Labeling information below according to classifications published by Taiwan's Bureau of Standards, Metrology and Inspection (BSMI) of the Ministry of Economic Affairs. This agency has published a series of standards (CNS 15030 1-27 Chemical Classification and Labelling) which provide guidance on classification and labeling of chemicals according to GHS
SODIUM HYDROXIDE (1310-73-2)
Symbol(s)

Signal Word Danger
Hazard(s)
H290 May be corrosive to metals
H312 Harmful in contact with skin
H314 Causes severe skin burns and eye damage
H318 Causes serious eye damage
Prevention
P234 Keep only in original container
P280 Wear protective gloves/protective clothing/eye protection/face protection
P260 Do not breathe dust/fume/gas/mist/vapours/spray
P264 Wash thoroughly after handling
Response
P304+P340 IF INHALED: Remove victim to fresh air and keep at rest in a position comfortable for breathing
P305+P351+P338 IF IN EYES: Rinse cautiously with water for several minutes. Remove contact lenses, if present and easy to do. Continue rinsing
P302+P352 IF ON SKIN: Wash with plenty of soap and water
P310 Immediately call a POISON CENTER or doctor/physician
P312 Call a POISON CENTER or doctor/physician if you feel unwell
P303+P361+P353 IF ON SKIN (or hair): Remove/Take off immediately all contaminated clothing. Rinse skin with water/shower
P362+P364 Take off contaminated clothing and wash it before reuse
P301+P330+P331 IF SWALLOWED: Rinse mouth. Do NOT induce vomiting
P310 Immediately call a POISON CENTER or doctor/physician
P321 Specific treatment (see label)
P390 Absorb spillage to prevent material-damage
Storage
P405 Store locked up
P406 Store in corrosive resistant container with a resistant inner liner
Disposal
P501 Dispose of contents/container in accordance with local/regional/national/international regulations

Classification
No classification assigned.

---

* * * Section 16 - OTHER INFORMATION * * *

Key / Legend
ACGIH - American Conference of Governmental Industrial Hygienists; ADR - European Road Transport; AU - Australia; BOD - Biochemical Oxygen Demand; C - Celsius; CA - Canada; CAS - Chemical Abstracts Service; CERCLA - Comprehensive Environmental Response, Compensation, and Liability Act; CN - China; CPR - Controlled Products Regulations; DFG - Deutsche Forschungsgemeinschaft; DOT - Department of Transportation; DSL - Domestic Substances List; EEC - European Economic Community; EINECS - European Inventory of Existing Commercial Chemical Substances; EPA - Environmental Protection Agency; EU - European Union; F - Fahrenheit; IARC - International Agency for Research on Cancer; IATA - International Air Transport Association; ICAO - International Civil Aviation Organization; IDL - Ingredient Disclosure List; IDLH - Immediately Dangerous to Life and Health; IMDG - International Maritime Dangerous Goods; JP -

Japan; Kow - Octanol/water partition coefficient; KR - Korea; LEL - Lower Explosive Limit; LOLI - List Of LIsts™ - ChemADVISOR's Regulatory Database; MAK - Maximum Concentration Value in the Workplace; MEL - Maximum Exposure Limits; NFPA - National Fire Protection Agency; NIOSH - National Institute for Occupational Safety and Health; NJTSR - New Jersey Trade Secret Registry; NTP - National Toxicology Program; NZ - New Zealand; OSHA - Occupational Safety and Health Administration; PH - Philippines; RCRA - Resource Conservation and Recovery Act; RID - European Rail Transport; RTECS - Registry of Toxic Effects of Chemical Substances®; SARA - Superfund Amendments and Reauthorization Act; STEL - Short-term Exposure Limit; TDG - Transportation of Dangerous Goods; TSCA - Toxic Substances Control Act; TWA - Time Weighted Average; UEL - Upper Explosive Limit; US - United States

Full text of R phrases in Section 3
R35 Causes severe burns

Other Information
Reasonable care has been taken in the preparation of this information; however, the manufacturer makes no warranty whatsoever including the warranty of merchantability, expressed or implied, with respect to this information. The manufacturer makes no representations and assumes no liability for any direct, incidental, consequential, or other such damages resulting from its use or misuse.

Disclaimer:
Supplier gives no warranty whatsoever, including the warranties of merchantability or of fitness for a particular purpose. Any product purchased is sold on the assumption the purchaser shall determine the quality and suitability of the product. Supplier expressly disclaims any and all liability for incidental, consequential or any other damages arising out of the use or misuse of this product. No information provided shall be deemed to be a recommendation to use any product in conflict with any existing patent rights. THIS SDS IS TO BE UTILIZED SOLELY AS A REFERENCE DOCUMENT AND IT IS NOT TO BE USED TO SATISFY THE DISTRIBUTION REQUIREMENTS OF OSHA'S HAZARD COMMUNICATION STANDARD (HCS) NOR CANADA'S CONTROLLED PRODUCT REGULATION (CPR). Read the Safety Data Sheet before handling product. Use of any information contained herein is provided at the reader's own risk and thus independent judgment by trained professionals must be utilized at all times.

Copyright
Copyright 1984-2014 ChemADVISOR, Inc "RTECS®" is a United States trademark owned and licensed under authority of the U.S. Government, by and through Accelrys, Inc. Portions ©Copyright 2014, U.S. Government. All rights reserved

19164
①

Effective 01/01/04

PRODUCT NAME: **WaterWorks SP-400** **D.O.E./D.O.D./ EPA / NRC Grade**

U.S. DEPARTMENT OF LABOR
Occupational Safety and Health Administration

MATERIAL SAFETY DATA SHEET

May be used to comply with OSHA's Hazard Communication Standard, 29 CFR 1910.1200.
Standard must be consulted for specific requirement

SECTION I MANUFACTURER'S INFORMATION

Manufacturer's Name & Address:

WaterWorks America Inc.
13676 York Road
North Royalton, OH 44133

24 hour Emergency Telephone Number
(440) 526-4815
Information Telephone Number:
(440) 237-0909
Fax Number (24 hour)
(440) 526-4907

SECTION II HAZARDOUS INGREDIENTS/IDENTITY INFORMATION

Hazardous Components: Paints, Preservatives, Solvents %

None

Alloys and Metallic coatings %

None

Hazardous mixtures of other liquids, solids, or gases %

None

Others %

None

Chemical name and synonyms

Acrylic Acrylate Resin

Trade Name

WaterWorks SP-400

Chemical Family

Acrylic Anionic Polymer

NFPA/HMIS: Health – 0 Fire – 1 Reactivity – 0 Special Hazards – **NONE**
D.O.T. Class: **Not Required**
EPA Registration: **Not Required**

U.S. Dept. of Commerce Universal Code Name **"Acyclic Acrylic Acrylate Co-Polymer"**

SECTION III PHYSICAL DATA/CHEMICAL CHARACTERISTICS

Boiling Point	N.A.	Bulk Density	0.8 g/cc
Vapor Pressure	N.A.	% Volatiles	N.A.
Vapor Density	N.A.	Evaporation Rate	N.A.
Solutability in Water	Insoluble	pH	7.0
Appearance and odor	White Granular no odor	Size	400 microns

Water Works America, Inc.

WaterWorks Crystals® ... solidifying water in wastes to cost-effectively prevent leakage of free-liquids and pass the Paint Filter Test!

PHONE: 440-209-1440 e-mail: waterworks@ncweb.com FAX: 440-209-1441

DC 2-304

Attachment D-5

Photos of HWMA Unit Secondary Containment Devices

Portable Spill Pallet

Portable Spill Pallet (Inside View)

Attachment D-6

HFEF Secondary Containment Drawings (Examples)

Transfer/Preparation Rooms Floor Plan, Elevation and Details

753686 (Alternate ID: W0353-0005-ED)

Decon Cell Spray Chamber Floor Plans, Elevation and Details

773439 (Alternate ID: H-6-2-0099) &

761331 (Alternate ID: H-6-2-0100)

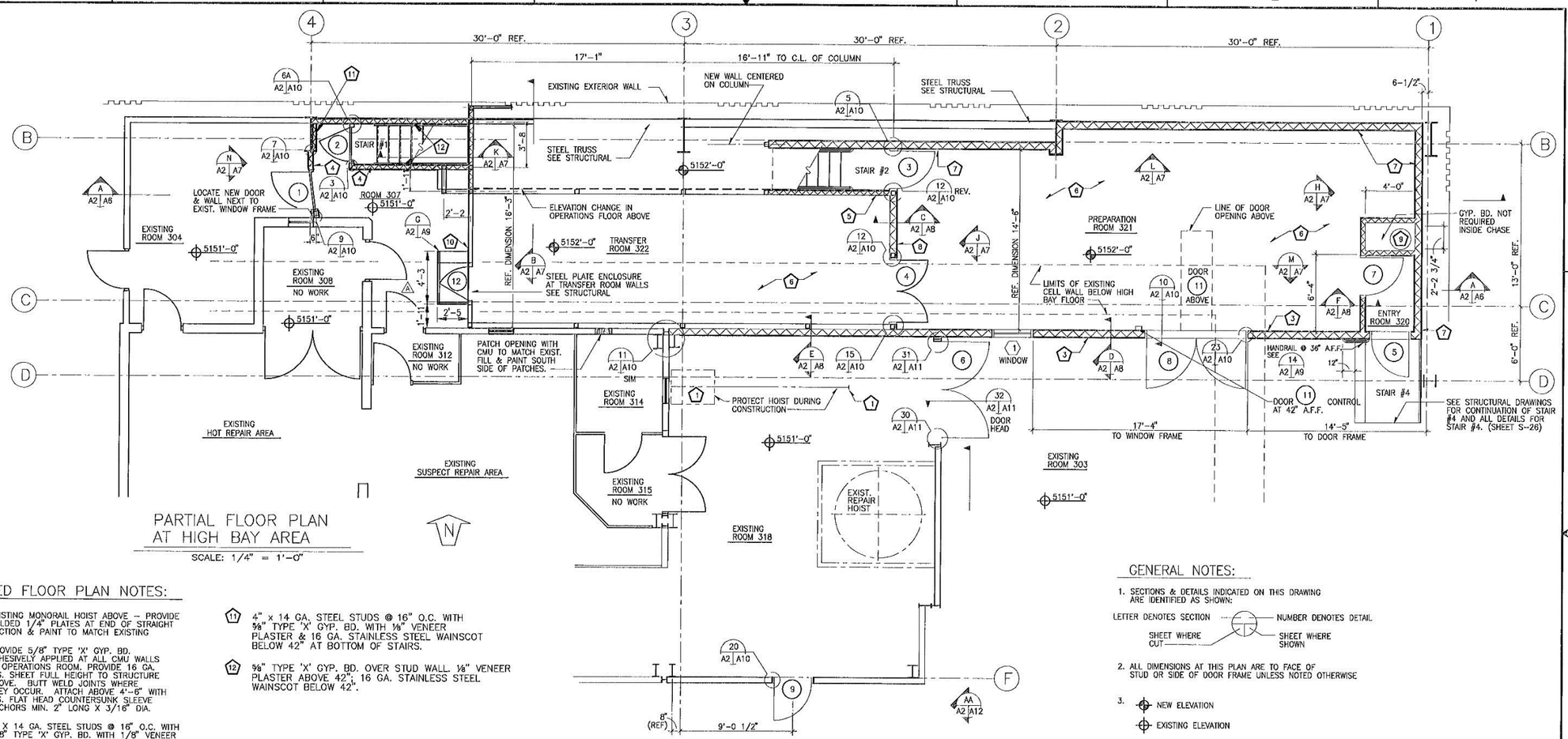

PARTIAL FLOOR PLAN AT HIGH BAY AREA

SCALE: 1/4" = 1'-0"

KEYED FLOOR PLAN NOTES:

1. EXISTING MONORAIL HOIST ABOVE – PROVIDE WELDED 1/4" PLATES AT END OF STRAIGHT SECTION & PAINT TO MATCH EXISTING
2. PROVIDE 5/8" TYPE 'X' GYP. BD. ADHESIVELY APPLIED AT ALL CMU WALLS IN OPERATIONS ROOM. PROVIDE 16 GA. S.S. SHEET FULL HEIGHT TO STRUCTURE ABOVE. BUTT WELD JOINTS WHERE THEY OCCUR. ATTACH ABOVE 4'-6" WITH S.S. FLAT HEAD COUNTERSUNK SLEEVE ANCHORS MIN. 2" LONG X 3/16" DIA.
3. 6" X 14 GA. STEEL STUDS @ 16" O.C. WITH 5/8" TYPE 'X' GYP. BD. WITH 1/8" VENEER PLASTER BOTH SIDES ABOVE 42". 16 GA. STAINLESS STEEL WAINSCOT BELOW 42".
4. 4" X 18 GA. STEEL STUDS @ 16" O.C. WITH 5/8" TYPE 'X' GYP. BD. WITH 1/8" VENEER PLASTER BOTH SIDES.
5. 4" X 14 GA. STEEL STUDS @ 16" O.C. WITH 5/8" TYPE 'X' GYP. BD. WITH 1/8" VENEER PLASTER & 16 GA. STAINLESS STEEL WAINSCOT BELOW 42" AT OPERATIONS ROOM ONLY.
6. STEEL FLOORING – SEE STRUCTURAL DRAWINGS
7. 6" X 14 GA. STEEL STUDS @ 16" O.C. WITH 5/8" TYPE 'X' GYP. BD. BOTH SIDES. PROVIDE 1/8" VENEER PLASTER ABOVE 42" & 16 GA. STAINLESS STEEL WAINSCOT BELOW 42" AT PREP. ROOM SIDE
8. 6" X 14 GA. STEEL STUDS @ 16" O.C. PROVIDE 5/8" TYPE 'X' GYP. BD. AND 1/8" VENEER PLASTER ABOVE 42" AND 16 GA. STAINLESS STEEL WAINSCOT BELOW 42" ON OPERATIONS ROOM SIDE ONLY. DELETE GYP. BD., PLASTER & S.S. WAINSCOT BELOW OPERATIONS ROOM FLOOR.
9. EXISTING DUCT TO REMAIN – PROTECT DURING CONSTRUCTION.
10. SHEET METAL ON WEST SIDE OF WCC SUPPORT STRUCTURE
11. 4" x 14 GA. STEEL STUDS @ 16" O.C. WITH 5/8" TYPE 'X' GYP. BD. WITH 1/8" VENEER PLASTER & 16 GA. STAINLESS STEEL WAINSCOT BELOW 42" AT BOTTOM OF STAIRS.
12. 5/8" TYPE 'X' GYP. BD. OVER STUD WALL. 1/8" VENEER PLASTER ABOVE 42"; 16 GA. STAINLESS STEEL WAINSCOT BELOW 42".

GENERAL NOTES:

1. SECTIONS & DETAILS INDICATED ON THIS DRAWING ARE IDENTIFIED AS SHOWN:

   LETTER DENOTES SECTION — NUMBER DENOTES DETAIL
   SHEET WHERE CUT — SHEET WHERE SHOWN

2. ALL DIMENSIONS AT THIS PLAN ARE TO FACE OF STUD OR SIDE OF DOOR FRAME UNLESS NOTED OTHERWISE
3. NEW ELEVATION
   EXISTING ELEVATION
4. SEE SHEET A9 FOR STAIR PLANS, SECTIONS & DETAILS
5. ALL STEEL STUD PARTITIONS SHALL HAVE HORIZONTAL STEEL BRIDGING AT MAXIMUM 5'-0" O.C. (3 ROWS FOR 20' HIGH WALL) INSTALLED PER MANUFACTURES RECOMMENDATIONS
6. ELEVATIONS SHOWN ARE TO TOP OF STEEL FLOORING UNLESS OTHERWISE NOTED.
7. SEE STRUCTURAL SHEETS FOR FLOOR OVERBUILD AND MECHANICAL SHEETS FOR GANTRY CRANE AT PREPARATION ROOM.

SYM	APPR'D	CHANGE	BY	CHK'D	DATE
2		SEE SHEET T-1			
2		SEE SHEET 1 FOR LATEST REVISION.	SLP	NER	6/92
01		REVISED			5/92

MICRO-FILMED DATE 3-21-95

UNLESS OTHERWISE NOTED
ALL DIMENSIONS ARE IN INCHES
REMOVE ALL BURRS AND SHARP EDGES.
ALL MACHINED SURFACES TO BE 125# OR FINER.
STOCK FINISHES AS REQUIRED ARE IN ACCORDANCE WITH THE LATEST REVISION OF ANSI/ASME B46.1.
DIMENSIONS & TOLERANCES IN ACCORDANCE WITH THE LATEST REVISION OF ANSI Y14.5M.

DRAWN BY M. ZAUSCH	DATE 5/92	SERVICE REQUEST E6329-05/E6358-05	
CHECKED R. HAYES	5/92	PROJECT ENGINEER	DATE
RESP. ENGINEER C.L.W.	5/92	APPR'D/RELEASED N.E. RUSSELL	6/26/92

PLOTDATE: 04-23-92
PLOT-SCALE: 1=48.00
CAD-STATION # CW4
FILE: D0050A02
302

BINDING ORDER 3 OF 152

PART NO | NEXT ASSEMBLY | REQ'D

PREPARED BY
ALPHA ENGINEERS, INC.
POCATELLO, IDAHO

THIS DRAWING IS THE PROPERTY OF
ARGONNE NATIONAL LABORATORY

TITLE
WIPP WASTE FACILITY ENHANCEMENTS BLDG. 785

FLOOR PLAN AT HIGH BAY FLOOR

ARGONNE WEST | LWEL
SHEET A-2 | DRAWING NUMBER W0353-0005-ED-03 | REV.

PLOT SCALE: 1:48
EDIT DATE: 6/92

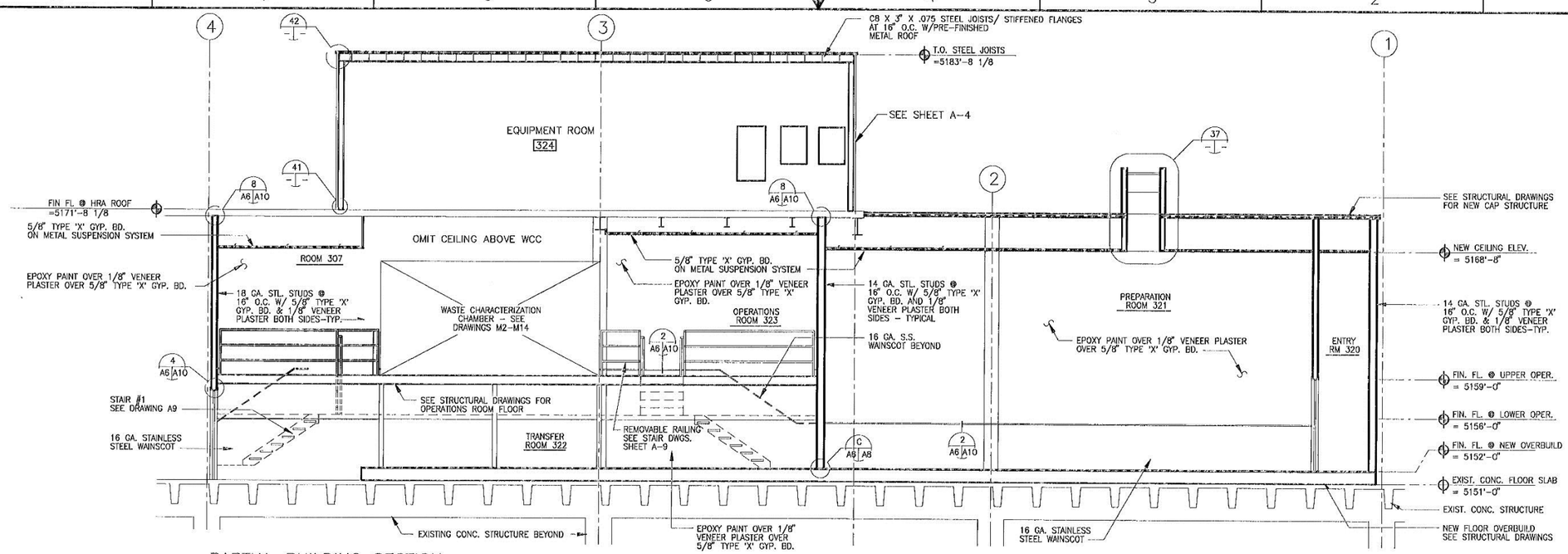

PARTIAL BUILDING SECTION (A A2/A6)

SCALE: 1/4" = 1'-0"

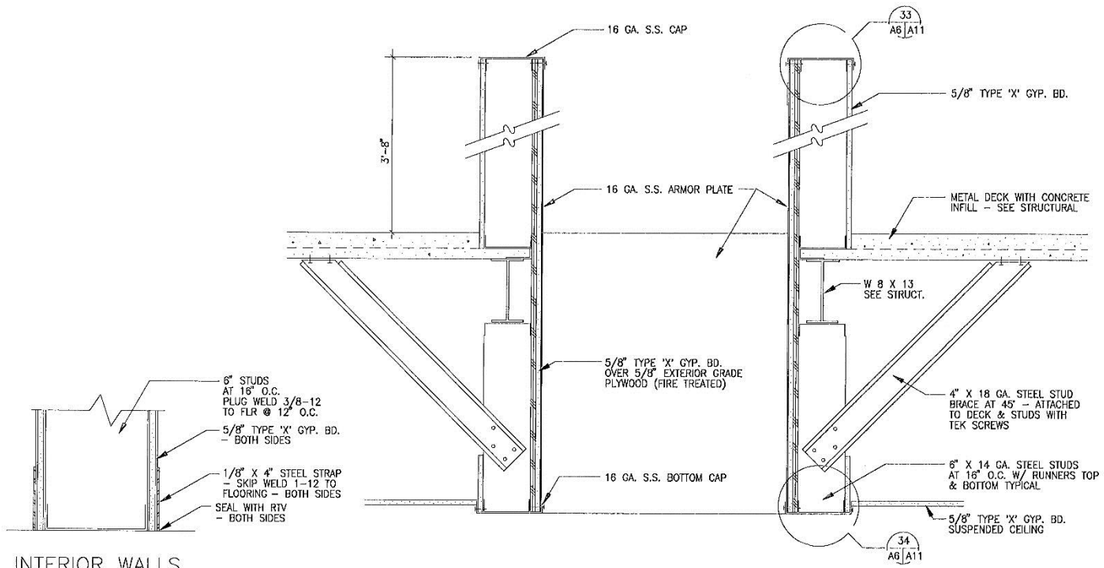

OVERHEAD COILING DOOR OPENING SECTION (37)

SCALE: 1/4" = 1'-0"

INTERIOR WALLS / SILL DETAIL (47)

SCALE: 3" = 1'-0"

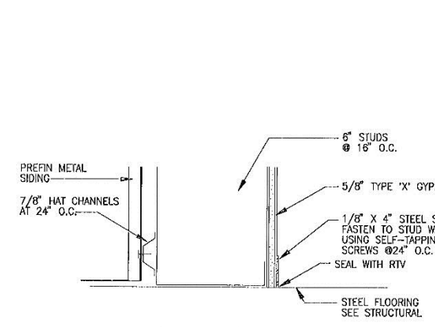

WALL / SILL DETAIL (41)

SCALE: 3" = 1'-0"

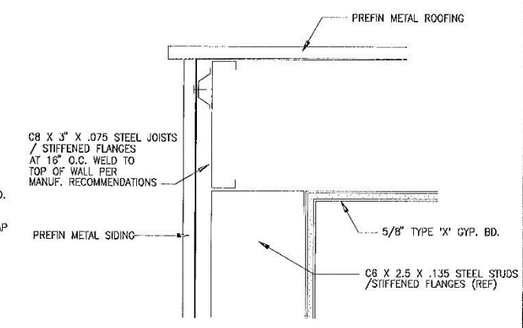

ROOF / WALL DETAIL (42)

SCALE: 3" = 1'-0"

2	SEE SHEET T-1				
	SEE SHEET 1 FOR LATEST REVISON.	SLP	NER	6/92	
01	REVISED	MZ	RH	5/92	
SYM	APPRV	CHANGE	BY	CHK'D	DATE

UNLESS OTHERWISE NOTED
ALL DIMENSIONS ARE IN INCHES REMOVE ALL BURRS AND SHARP EDGES.
ALL MACHINED SURFACES TO BE 125 OR FINER.
STOCK FINISHES AS RECEIVED, ARE IN ACCORDANCE WITH THE LATEST REVISION OF ANSI/ASME B46.1.
DIMENSIONS & TOLERANCES IN ACCORDANCE WITH THE LATEST REVISION OF ANSI Y14.5M.

		DATE
DRAWN BY	M. ZAUSCH	5/92
CHECKED	R. HAYES	5/92
RESP. ENGINEER	C.L.W.	5/92

SERVICE REQUEST: E6329-05/E6358-05

PROJECT ENGINEER: KENT THORP FOR NEAL RUSSELL — DATE 11/13/93

APPRV'D/RELEASED: N.E. RUSSELL — DATE 10/20/93

PLOTDATE: 04-12-93 3:2
PLOT-SCALE: 1=48.00
CAD-STATION / DWG FILE: 00050A06

BINDING ORDER: 7 OF 52

PART NO | NEXT ASSEMBLY | REQ'D

PREPARED BY: ALBUQUERQUE ENGINEERS, INC. POCATELLO, IDAHO

THIS DRAWING IS THE PROPERTY OF ARGONNE NATIONAL LABORATORY

TITLE: WIPP WASTE FACILITY ENHANCEMENTS BLDG. 785

PARTIAL BUILDING SECTION

APPROVE VEST | UNEL.

SHEET: A-6 | DRAWING NUMBER: W0353-0005-ED-03 | REV.

PLOT SCALE: 1=48
EDIT DATE:

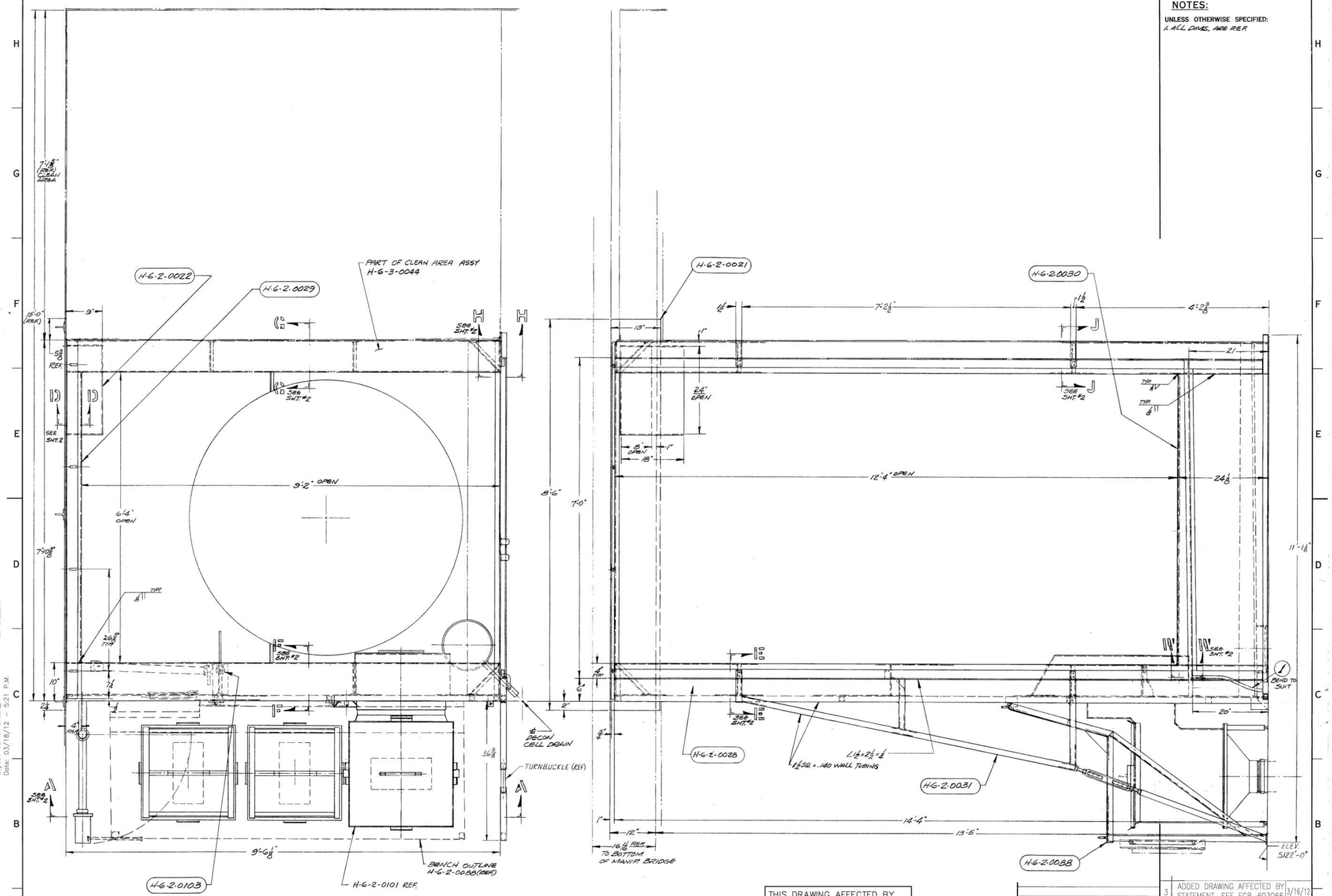

NOTES:

UNLESS OTHERWISE SPECIFIED:
1. ALL DIMS. ARE REF.

THIS DRAWING AFFECTED BY
EJN / FCF NO. NA
RIPOUT DWG NO. NA
INSTALL DWG NO. 778328

INDEX CODE NUMBER				
AREA	TYPE	CL	ORIG	SERIAL
273	0785	42	081	773439

H-6-99-0002

NEXT ASSEMBLIES

DES. GR. LEADER	DATE	DRAWN BY	DATE
G.S. Fewkes	7/14/70	W. Newman	7/17/70
PROJECT ENGR.		CHECKED BY	
J. Gray Mayer	8/14/70	E. Kish	8-13-70
APPR. FOR CONST.		COGNIZANT ENGR.	
		R D Cace	7-6-70

MICRO-FILM
2-6-74(A)
6-2-75(B)

SCALE 1½" = 1'-0"

STM.	ZONE	CHANGE & DATE	BY	CHKD.	APPD.
3		ADDED DRAWING AFFECTED BY STATEMENT, SEE ECR-603066 3/16/12			
2		PER DCN #2865			
A	GP	PER CR-1-22 2-3-72			

THIS DRAWING IS THE PROPERTY OF
ARGONNE NATIONAL LABORATORY

TITLE: SPRAY CHAMBER PLAN AND FRONT ELEV. INSTALLATION & ASSY.

SHEET 1 OF 5 — DRAWING NO. H-6-2-00991 3

File: 773439 3.dwg
Path: V:\012-0171
Layout Name: Sheet_1
Date: 03/18/12 – 5:21 P.M.
ID: VALESM

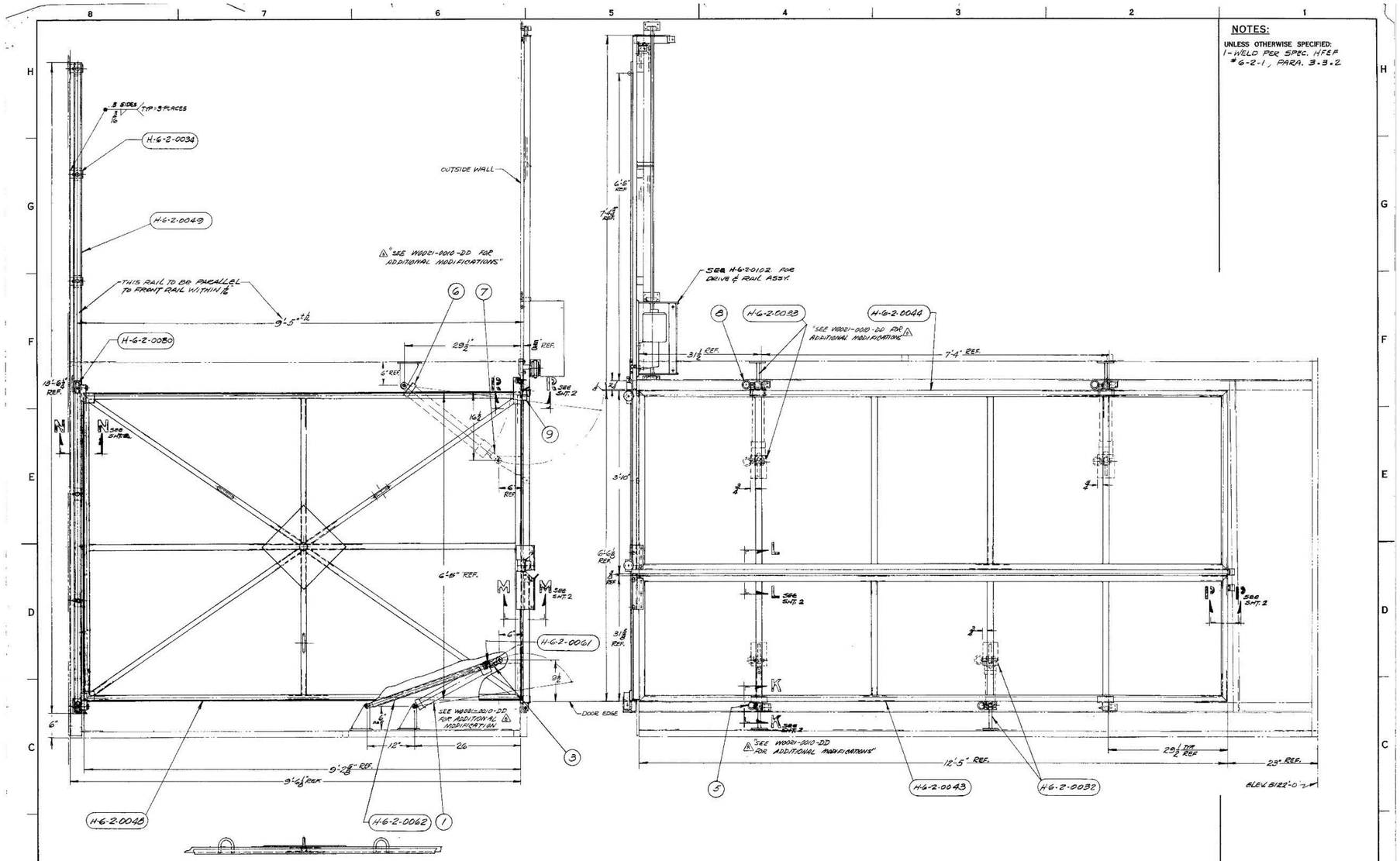

NOTES:

UNLESS OTHERWISE SPECIFIED:
1- WELD PER SPEC. HFEF #6-2-1, PARA. 3.3.2

ZONE	CHANGE & DATE	BY	CHKD	APPR.
B	REV. PER DCN 91			
A	CHANGE PER CR-1-22			

H-6-99-0002
NEXT ASSEMBLIES

DES. OR LEADER	DATE	DRAWN BY	DATE
CB. Y. R. Wilcox	4/10/70	W. NEWMAN	4/17/70
PROJECT ENGINEER	4/14/70	CHECKED BY R. Cuch	6-19-70
PROJECT CONST.		COORDINATE ENGR. R. G. Case	7-7-70

Micro Film Date 2-6-74

SCALE 1/4" = 1 NOTED

THIS DRAWING IS THE PROPERTY OF
ARGONNE NATIONAL LABORATORY

TITLE: HINGED DOORS AND MOVABLE ROOF-ASSY. AND INSTALLATION

SHEET 1 OF 2 | DRAWING NO. H-6-2-0100 | B

Attachment D-7

SCMS Water Wash and Carbonation Processes Process Flow Diagram (Example)

File Name: 793-049 (D. Olson 6-19-2003)
Ref: 748459 (Sheet 1 of 1) (Alternate Id: W7930-0144-ED-00)

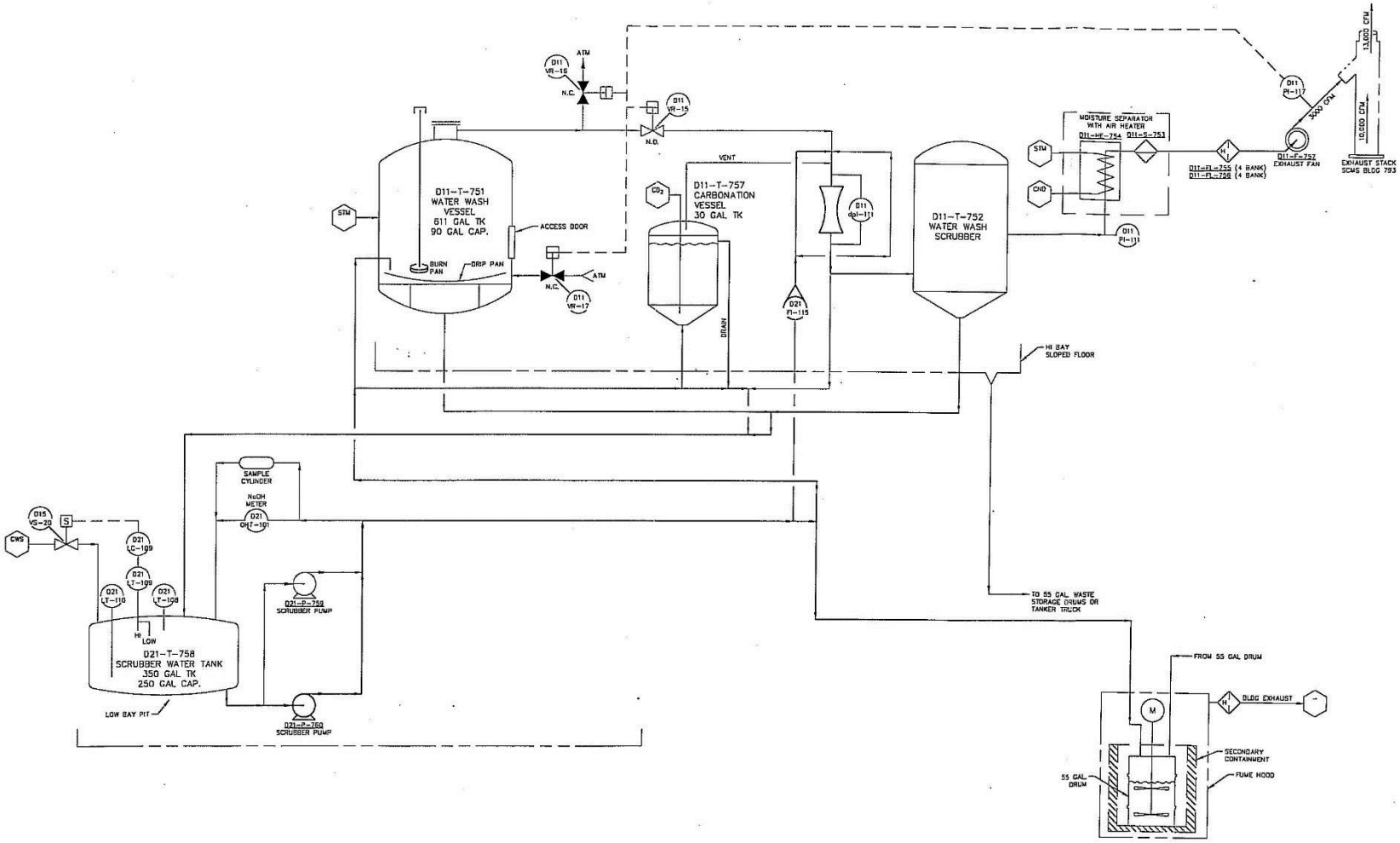

FILE NAME: 793-049
D. OLSON 6-19-2003

Attachment D-8

MFC Standard Process and Instrumentation Symbols (Example)

701387 (Sheet 1 of 1) (Alternate Id: F0000-0016-ED)

PROCESS LINES

- PRIMARY PROCESS
- PRIMARY PROCESS (UNDERGROUND)
- SECONDARY PROCESS
- SECONDARY PROCESS (UNDERGROUND)
- BURIED OR EMBEDDED PIPE
- HEAT TRACING E–ELECTRICALLY TRACED (SHOWN) S–STEAM TRACED
- ANL–VENDOR INTERFACE
- SEISMIC REQUIREMENTS APPLY BETWEEN FLAGS (FOR EXACT PHYSICAL DESCRIPTION OF SEISMIC BOUNDARIES REFER TO APPROPRIATE ISOMETRIC)

LINE BREAK/CONTINUATION

- LINE DESIGNATION
- DRAWING NUMBER
- SHEET NUMBER/ZONE

PIPING SYMBOLS

- ATMOSPHERIC VENT (STRAIGHT VENT IS REQUIRED IN DRAINAGE SYSTEMS)
- SPRAY NOZZLE
- REDUCER/INCREASER
- FLOW SIGHT GLASS
- FLAME ARRESTOR
- DRAIN
- STRAINER
- EXPANSION JOINT
- HOSE
- CRIMPED TUBE
- FLEXIBLE CONNECTION
- QUICK DISCONNECT W/O CHECKS (SHOWN OPEN)
- QUICK DISCONNECT WITH CHECKS (SHOWN CLOSED)
- PLUG
- CAP
- BLIND FLANGE
- LOOP SEAL
- RESTRICTION ORIFICE PLATE
- REMOVABLE SPOOL
- WATER HAMMER ARRESTOR
- VAPOR TRAP
- HOSE BIBB
- ST–STEAM TRAP (SHOWN)
  - DT–DRAIN TRAP
  - AT–AIR TRAP
  - CT–CONDENSATE TRAP
- MOISTURE SEPARATOR WITH AUTOMATIC DRAIN
- MOISTURE SEPARATOR WITH MANUAL DRAIN
- H HEPA FILTER (SHOWN)
  - C COALESCING FILTER
  - S SCREEN FILTER
  - P PAPER ELEMENT FILTER
  - M METAL FILTER
  - F PREFILTER
- PLANT/INSTRUMENT AIR PORT
- PENETRATIONS
  - ARGON CELL (SHOWN)
  - AIR CELL
  - BOTH CELLS
- EDUCTOR
- AIR COOLED FINNED PIPE
- OPEN TO ATMOSPHERE

LINE DESIGNATION

D B A C E

1"AR1– X — LINE DESIGNATION
OR
ø3/8"T AR1– X — LINE DESIGNATION
OR
36"X24"D V3– X — LINE DESIGNATION

- A PIPE SIZE (NOMINAL)
- B TUBE SIZE (OUTSIDE DIAMETER)
- C LINE TYPE CALLOUT
- D DUCT SIZE
- E UNIQUE IDENTIFICATION

VALVE STATUS

N.O. N.C.

- L.O. – LOCKED OPEN
- L.C. – LOCKED CLOSED
- N.O. – NORMALLY OPEN (SHOWN)
- N.C. – NORMALLY CLOSED (SHOWN)
- F.O. – FAIL OPEN
- F.C. – FAIL CLOSED
- F.L. – FAIL LOCKED IN LAST POSITION
- F.I. – FAIL INDETERMINATE

SELF–ACTUATING REGULATORS

- TEMPERATURE REGULATOR
- DIFFERENTIAL–PRESSURE–REDUCING REGULATOR WITH INTERNAL AND EXTERNAL PRESSURE TAPS
- BACKPRESSURE REGULATOR, SELF–CONTAINED
- PRESSURE–REDUCING REGULATOR, SELF–CONTAINED, WITH HANDWHEEL ADJUSTABLE SET POINT
- PRESSURE–REDUCING REGULATOR, WITH EXTERNAL PRESSURE TAP
- BACKPRESSURE REGULATOR WITH EXTERNAL PRESSURE TAP
- PRESSURE–REDUCING REGULATOR, WITH INTEGRAL OUTLET PRESSURE RELIEF VALVE OPTIONAL PRESSURE INDICATOR
- RUPTURE DISK PRESSURE
- RUPTURE DISK VACUUM
- VACUUM RELIEF
- PRESSURE RELIEF
- PRESSURE AND VACUUM RELIEF

VALVES

- GENERAL OR GATE
- GLOBE
- * CHECK
- THREE–WAY
- FOUR–WAY
- DIAPHRAGM OR PINCH
- BALL
- BALL–3 WAY
- BUTTERFLY
- RESTRICTION ORIFICE DRILLED IN VALVE
- PLUG
- COCK
- NEEDLE
- * STOP CHECK
- ANGLE
- SLIDE
- DAMPER OR LOUVER
- BACKDRAFT DAMPER

ACTUATORS

- HAND
- DIAPHRAGM
- DIAPHRAGM PRESSURE–BALANCED
- SOLENOID
- MOTOR
- CYLINDER WITH PILOT MOUNTING
- CYLINDER, SINGLE–ACTING SPRING–OPPOSED
- CYLINDER, DOUBLE–ACTING
- FLOAT
- DIAPHRAGM WITH POSITIONER
- SPRING OR WEIGHT
- LATCH–TYPE ACTUATOR WITH MANUAL RESET
- CONTROL VALVE WITH ATTACHED ELECTRO–PNEUMATIC SIGNAL CONVERTER (I/P)
- CONTROL VALVE WITH SEPARATELY MOUNTED ELECTRO–PNEUMATIC SIGNAL CONVERTER (I/P)
- MANOMETER

PUMPS AND COMPRESSORS

- COMPRESSOR
- BLOWER OR FAN (CENTRIFUGAL)
- CENTRIFUGAL PUMP
- RECIPROCATING PUMP
- RECIPROCATING PUMP WITH INTEGRAL PRESSURE RELIEF VALVE
- ROTARY PUMP
- PROPORTIONING PUMP
- AIR OPERATED DIAPHRAGM PUMP
- WET PIT VERTICAL PUMP
- CANNED VERTICAL PUMP
- SUBMERSIBLE VERTICAL PUMP
- POSITIVE DISPLACEMENT PUMP

DRIVERS

- MOTOR
- SPEED REDUCER (GEAR DRIVEN)
- SPEED REDUCER (BELT DRIVEN)

HEAT TRANSFER

- WATER COOLED EXCHANGER
- WATER COOLED CONDENSER
- SHELL AND TUBE EXCHANGER
- HEATER
- SUPERHEATER OR REHEATER
- ELECTRICAL HEATER

VESSELS & TANKS

- OPEN STORAGE
- CLOSED STORAGE
- VESSEL
- PRESSURIZED GAS BOTTLE

DRYERS

- GENERAL
- DESSICANT

INSTRUMENT LINES

- UNDEFINED SIGNALS
- PNEUMATIC SIGNALS
- ELECTRICAL SIGNALS
- HYDRAULIC SIGNALS
- CAPILLARY TUBING
- PLC COMMUNICATIONS LINK

INSTRUMENT SYMBOLS

- UNDEFINED INTERLOCK LOGIC
- LIGHT
- FI X — INDICATING FLOWMETER (ROTAMETER)
- FI X — INDICATING FLOWMETER WITH INTEGRAL THROTTLING VALVE
- PI X — PRESSURE INDICATOR WITH INTEGRAL ISOLATION VALVE
- H/O/A HA X — H/O/A – HAND/OFF/AUTO (SHOWN)
  - S/S – START/STOP
  - O/O – ON/OFF
  - O/A/C – OPEN/AUTO/CLOSE
  - O/C – OPEN/CLOSE
  - S/S/J – START/STOP/JOG
- TE X — TEMPERATURE ELEMENT WITH THERMOWELL

GENERAL INSTRUMENT OR FUNCTION

DISCRETE INSTRUMENTS

- FIELD MOUNTED DEVICES
- PRIMARY LOCATION (PLC OR INTERFACE CABINET) — X–X CABINET LOCATION
- AUXILIARY LOCATION (NORMALLY INACCESSIBLE)
- NORMALLY INACCESSIBLE OR BEHIND–THE–PANEL

OPERATOR CONTROL STATION

- OCS SHARED DISPLAY INACCESSIBLE TO OPERATOR
- CONTROL LOGIC IN OCS ACCESSIBLE TO OPERATOR

PROGRAMMABLE LOGIC CONTROL

- CONTROL LOGIC IN PLC INACCESSIBLE TO OPERATOR
- CONTROL LOGIC IN PLC ACCESSIBLE TO OPERATOR
- COMPUTER FUNCTION FIELD MOUNT
- COMPUTER FUNCTION NORMALL ACCESIBLE TO OPERATOR

LINE TYPE CALLOUT

A1	PLANT AIR
A2	INSTRUMENT AIR
A4	DRYING AIR
A5	SUSPECT AIR
ACID	ACID
AD	AIR LOCK DISCHARGE
AR1	CLEAN ARGON
AR2	FILTERED ARGON (SUSPECT)
AR4	EMERGENCY ARGON
ARV1	SUSPECT ARGON
ATM	ATMOSPHERE
B	BREATHING AIR
BD	BLOW DOWN
C1	CONDENSATE 100 LB. MAX
C3	CONDENSATE 300 LB. MAX
CW	COLD WATER SUPPLY
CWR	COOLING WATER RETURN
CWS	COOLING WATER SUPPLY
D2	SUSPECT DRAINS
D3	CLEARWATER DRAINS
DS	DECON SPRAY WATER
DW	DEMINERALIZED WATER
F	FIRE PROTECTION
FRG	REFRIGERANT HOT GAS
FRL	REFRIGERANT LIQUID
FRS	REFRIGERANT SUCTION
H	HYDROGEN GAS
He	HELIUM
HF	HYDRAULIC FLUID
HW	HOT POTABLE WATER
IW	INDUSTRIAL WASTE
RLW	RADIOACTIVE LIQUID WASTE
OIL	REFRIGERANT OIL
PT	PNEUMATIC TRANSFER
RD	ROOF DRAIN
SS	SANITARY SEWER
S1	STEAM 100 LB. MAX
SA	BUILDING EXHAUST
S3	STEAM 300 LB. MAX
V	STEAM VENTS
VA	VACUUM
V2	SUSPECT WASTE VENT
V3	SUSPECT EXHAUST
V4	SAFETY EXHAUST SYSTEM
V5	STACK EXHAUST
W1	SUSPECT WATER
WW	SERVICE WATER
Xe	XENON TAGGING

EQUIPMENT IDENTIFIERS

AV	AIR OPERATED VALVE
BLW	BLOWER
CAMR	CAMERA
CK	CHECK VALVE
CHR	CHILLER
CLH	CLUTCH
CMP	COMPRESSOR
FIL	FILTER
FUR	FURNACE
GRP	GRIPPER
HX	HEAT EXCHANGER
HTR	HEATER
M	MOTOR
P	PUMP
SETLR	SETTLER
SP	SEAL POT
SV	SOLENOID VALVE
TCH	TORCH
TK	TANK
STR	STRAINER
SEP	SEPARATOR
DRY	DRYER
EDUC	EDUCTOR

DWG. NO. F0000–0016–ED–04

INSTRUMENT IDENTIFICATION LETTERS

	FIRST–LETTER		SUCCEEDING LETTERS		
	MEASURED OR INITIATING VARIABLE	MODIFIER	READOUT OR PASSIVE FUNCTION	OUTPUT FUNCTION	MODIFIER
A	ANALYSIS		ALARM		
B	BURNER, COMBUSTION		USER'S CHOICE	USER'S CHOICE	USER'S CHOICE
C	USER'S CHOICE			CONTROL	
D	USER'S CHOICE	DIFFERENTIAL			
E	VOLTAGE		SENSOR (PRIMARY ELEMENT)		
F	FLOW RATE	RATIO (FRACTION)			
G	USER'S CHOICE		GLASS, VIEWING DEVICE		
H	HAND				HIGH
I	CURRENT (ELECTRICAL)		INDICATE		
J	POWER	SCAN			
K	TIME, TIME SCHEDULE	TIME RATE OF CHANGE		CONTROL STATION	
L	LEVEL		LIGHT		LOW
M	MOTOR (USER'S CHOICE)	MOMENTARY			MIDDLE, INTERMEDIATE
N	USER'S CHOICE		USER'S CHOICE	USER'S CHOICE	USER'S CHOICE
O	USER'S CHOICE		ORIFICE, RESTRICTION		
P	PRESSURE, VACUUM		POINT (TEST) CONNECTION		
Q	QUANTITY	INTEGRATE, TOTALIZE			
R	RADIATION		RECORD		
S	SPEED, FREQUENCY	SAFETY		SWITCH	
T	TEMPERATURE			TRANSMIT	
U	MULTIVARIABLE		MULTIFUNCTION	MULTIFUNCTION	MULTIFUNCTION
V	VIBRATION, MECHANICAL ANALYSIS			VALVE, DAMPER, LOUVER	
W	WEIGHT, FORCE		WELL		
X	UNCLASSIFIED	X AXIS	UNCLASSIFIED	UNCLASSIFIED	UNCLASSIFIED
Y	EVENT, STATE OR PRESENCE	Y AXIS		RELAY, COMPUTE, CONVERT	
Z	POSITION, DIMENSION	Z AXIS		DRIVER, ACTUATOR, UNCLASSIFIED FINAL CONTROL ELEMENT	

MISCELLANEOUS

X — ROOM NUMBER

NOTES:

1. INSTRUMENT SYMBOLS AND IDENTIFICATION ARE BASED ON ISA STANDARDS ISA–S5.1–1984 AND ISA–S5.3–1983. FOR FURTHER DETAIL AND CLARIFICATION, REFER TO THESE STANDARDS.
2. GRAPHICAL SYMBOLS FOR PROCESS FLOW DIAGRAMS ARE BASED ON ASA STANDARD ASA–Y32.11–1961. FOR FURTHER DETAIL AND CLARIFICATION, REFER TO THIS STANDARD.
3. OTHER PIPE FITTINGS, VALVES, AND PIPING SYMBOLS MAY BE FOUND IN ASA STANDARD ASA–Z32.2.3–1949(R1988).
4. X=UNIQUE DESIGNATION OF 1 TO 4 CHARACTERS. Y=UNIQUE DESIGNATION OF 5 CHARACTERS
5. FOR TYPICAL INSTRUMENT IDENTIFICATION LETTER COMBINATIONS AND LOOP EXAMPLES SEE DWG. NO. F0000–0017–ED.

* NOT PER ABOVE STANDARDS.

SYM	APPR'D	CHANGE	BY	CHK'D	DATE
4		eCR–576249	DS	SV	02/23/2010
3	LAB	DCN F0000–054(976388–UC)	GO	JB	4–4–97
2	MDC	DCN F0000–022	JEB	LAB	7–21–93
1	WD	DCN F0000–013	JEB	PBS	9–5–81

MICRO–FILMED DATE

UNLESS OTHERWISE NOTED
ALL DIMENSIONS ARE IN INCHES
REMOVE ALL BURRS AND SHARP EDGES.
ALL MACHINED SURFACES TO BE 125/ OR FINER.
STOCK FINISHES AS RECEIVED, ARE IN ACCORDANCE WITH THE LATEST REVISION OF ANSI/ASME B46.1.
DIMENSIONS & TOLERANCES IN ACCORDANCE WITH THE LATEST REVISION OF ANSI Y14.5M.

DRAWN BY WALTON/JEB	DATE 3–5–91	SERVICE REQUEST NO. D6496	
CHECKED P.B. SNYDER	3–21–91	PROJECT MGR. L.A. BUMB	DATE 3–21–91
RESP. ENGINEER L.A. BUMB	3–21–91	APPR'D/RELEASED W. DANIELSON	3–21–91
MATERIAL –			

INDEX CODE NUMBER: AREA 273 | TYPE 0765 | CL 24 | DWG 052 | SERIAL 701387

PART NO.	NEXT ASSEMBLY	REQ'D

THIS DRAWING IS THE PROPERTY OF ARGONNE NATIONAL LABORATORY

TITLE: FCF STANDARD PROCESS AND INSTRUMENTATION SYMBOLS

SCALE	SHEET	DRAWING NUMBER	REV.
NONE	1 OF 1	F0000–0016–ED–04	

File: 701387.dwg
Path: Y:\SMCUDJ\D10–00031\eCR–576249
Drawn in Model Space
Date: 02/23/10 – 2:05 P.M.
SMCUDJ

Attachment D-9

SCMS Process and Instrumentation Diagrams (Examples)

748463 (sheet 1-5 of 5),
748462 (sheet 1 of 1),
748456 (sheet 1of 1) (Alternate Id: W7930-0141-ED),
748457 (sheet 1-2 of 2) (Alternate Id: W7930-0142-ED),
748454 (sheet 1-2 of 2),
718455 (sheet 1 of 3) (Alternate Id: W7930-0140-ED)

FMT-D1-INL, R-1

REVISIONS		
REV	DESCRIPTION	EFFECTIVE DATE:
5	REDRAWN WITH CHANGE SEE eCR-595839	8/31/2011
6	SEE eCR-655087	11/28/2017

NOTES:

1. FOR STANDARD PROCESS AND INSTRUMENTATION SYMBOLS SEE DWG. NO. F0000-0016-ED.
2. Na/NaK CONTAINERS MAY BE CONFIGURED DIFFERENT WAYS ON A CASE-BY-CASE BASIS.
3. USE LINE AND CONTAINER HEATERS AS NECESSARY.

REFERENCE DRAWING:

W7930-0144-ED SCMS WATER WASH & CARBONATION PROCESS FLOW DIAGRAM

ALTERNATE ID: W7930-0148-ED

REQUESTER:	D. LEWIS
RESP ENGR:	W. BENJAMIN
DESIGN:	W. BENJAMIN
DRAWN:	E. IMPALA
PROJECT NO.	N/A
SPCL. CODE	N/A
FOR REVIEW/APPROVAL SIGNATURES SEE ECR NO.	595839
EFFECTIVE DATE:	12/4/98

Idaho National Laboratory

MFC/SCMS BLDG 793
SODIUM COMPONENTS MAINTENANCE SHOP
WATER WASH & CARBONATION PROCESSES

PROCESS AND INSTRUMENTATION DIAGRAM

SIZE	CAGE CODE	INDEX CODE NUMBER				DWG NO.	REV
		AREA	TYPE	CL	ORIG		
D	01MF3	273	0793	24	052	748463	6

SCALE: NONE SHEET 1 OF 5

File: 748463R6.dwg
Path: P:\2018 PROJECTS\018-0027 BROWN MFC-793 WATER WASH P&ID
Layout Name: SH 1
Date: 11/16/17 - 2:31 P.M.
ID: JUDYAR

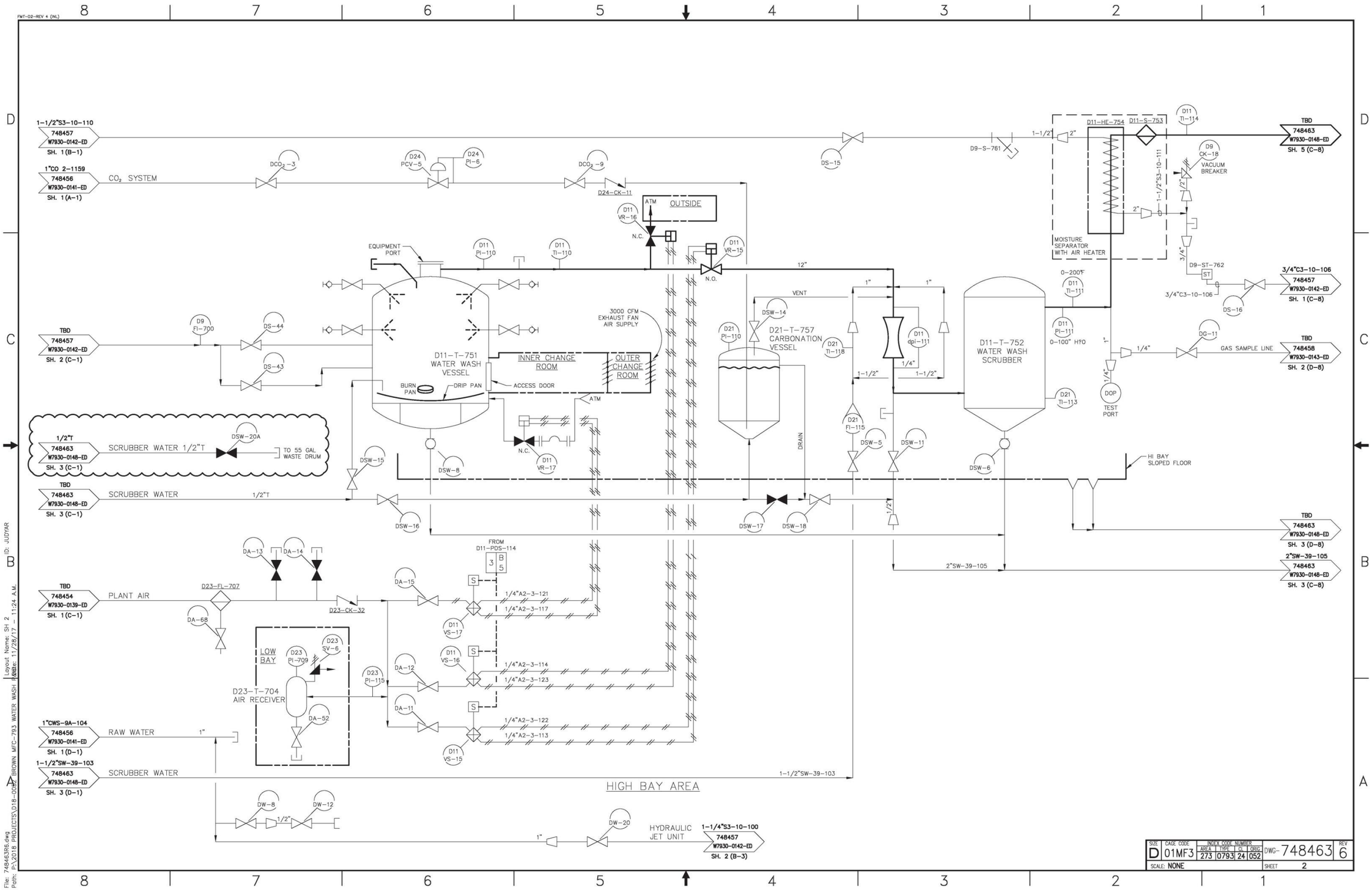
1-1/2"S3-10-110
748457
W7930-0142-ED
SH. 1 (B-1)
1"CO 2-1159
748456
W7930-0141-ED
SH. 1 (A-1)
CO2 SYSTEM
DCO2-3
D24 PCV-5
D24 PI-6
DCO2-9
D24-CK-11
DS-15
D9-S-761
D11-HE-754
D11-S-753
D11 TI-114
TBD
748463
W7930-0148-ED
SH. 5 (C-8)
D9 CK-18
VACUUM BREAKER
1-1/2"S3-10-111
MOISTURE SEPARATOR WTH AIR HEATER
D9-ST-762
3/4"C3-10-106
748457
W7930-0142-ED
SH. 1 (C-8)
DS-16
DG-11
GAS SAMPLE LINE
TBD
748458
W7930-0143-ED
SH. 2 (D-8)
DOP
TEST PORT
ATM
OUTSIDE
D11 VR-16
N.C.
D11 VR-15
N.O.
EQUIPMENT PORT
D11 PI-110
D11 TI-110
12"
VENT
DSW-14
D21 PI-110
D21-T-757 CARBONATION VESSEL
D21 TI-118
D11 dpI-111
D11 TI-111
0-200°F
D11 PI-111
0-100" H2O
D11-T-752 WATER WASH SCRUBBER
D21 TI-113
D21 FI-115
DSW-5
DSW-11
DSW-6
DRAIN
HI BAY SLOPED FLOOR
TBD
748457
W7930-0142-ED
SH. 2 (C-1)
D9 FI-700
DS-44
DS-43
3000 CFM EXHAUST FAN AIR SUPPLY
D11-T-751 WATER WASH VESSEL
INNER CHANGE ROOM
OUTER CHANGE ROOM
ACCESS DOOR
BURN PAN
DRIP PAN
D11 VR-17
DSW-8
DSW-15
1/2"T
748463
W7930-0148-ED
SH. 3 (C-1)
SCRUBBER WATER 1/2"T
DSW-20A
TO 55 GAL WASTE DRUM
SCRUBBER WATER
DSW-16
DSW-17
DSW-18
TBD
748463
W7930-0148-ED
SH. 3 (D-8)
2"SW-39-105
748463
W7930-0148-ED
SH. 3 (C-8)
FROM D11-PDS-114
DA-13
DA-14
TBD
748454
W7930-0139-ED
SH. 1 (C-1)
PLANT AIR
D23-FL-707
D23-CK-32
DA-68
DA-15
1/4"A2-3-121
1/4"A2-3-117
D11 VS-17
LOW BAY
D23 PI-709
D23 SV-6
D23 PI-115
D23-T-704 AIR RECEIVER
DA-52
DA-12
DA-11
D11 VS-16
1/4"A2-3-114
1/4"A2-3-123
1/4"A2-3-122
1/4"A2-3-113
D11 VS-15
1"CWS-9A-104
748456
W7930-0141-ED
SH. 1 (D-1)
RAW WATER
1-1/2"SW-39-103
748463
W7930-0148-ED
SH. 3 (D-1)
SCRUBBER WATER
1-1/2"SW-39-103
HIGH BAY AREA
DW-8
DW-12
DW-20
HYDRAULIC JET UNIT
1-1/4"S3-10-100
748457
W7930-0142-ED
SH. 2 (B-3)
SIZE D
CAGE CODE 01MF3
INDEX CODE NUMBER AREA 273 TYPE 0793 SI 24 ORIG 052
DWG- 748463
REV 6
SCALE: NONE
SHEET 2
File: 748463R6.dwg
Path: P:\2018 PROJECTS\D18-0052 BROWN MFC-793 WATER WASH
Layout Name: SH 2
Date: 11/28/17 - 11:24 A.M.
ID: JUDYAR

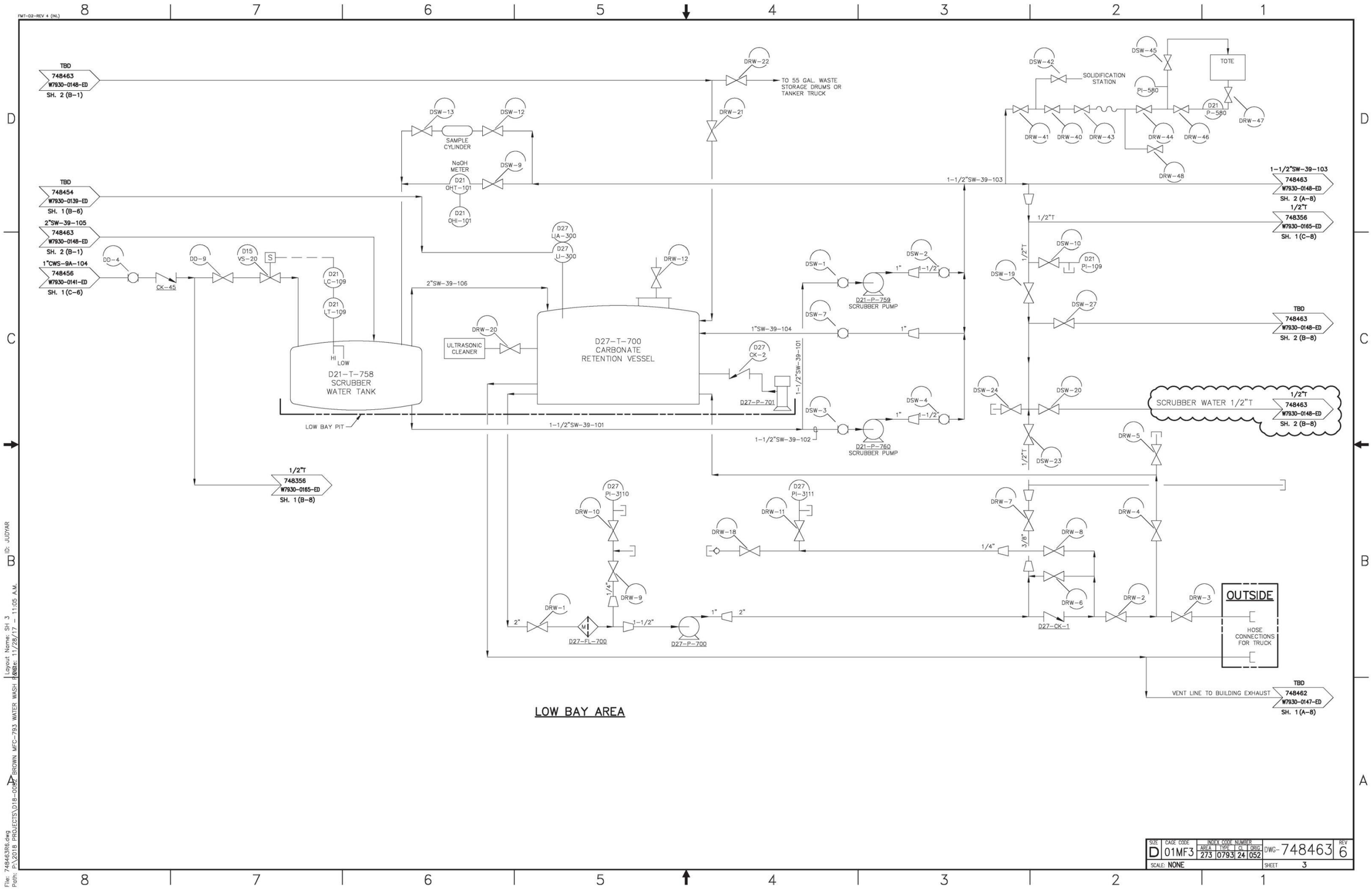

SIZE	CAGE CODE	INDEX CODE NUMBER				DWG-	REV
		AREA	TYPE	SI	ORIG		
D	01MF3	273	0793	24	052	748463	6
SCALE: NONE						SHEET 3	

File: 748463R6.dwg
Path: P:\2018 PROJECTS\018-0027 BROWN MFC-793 WATER WASH
Layout Name: SH 3
Date: 11/28/17 – 11:05 A.M.
ID: JUDYAR

FMT-D2-REV 4 (NL)

NOTES:

1. FOR STANDARD PROCESS AND INSTRUMENTATION SYMBOLS SEE DWG. NO. F0000-0016-ED.

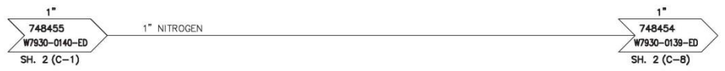

SIZE	CAGE CODE	INDEX CODE NUMBER					DWG-	REV
		AREA	TYPE	S	ORIG			
D	01MF3	273	0793	24	052		748463	6
SCALE: NONE						SHEET 4		

File: 748463R6.dwg
Path: P:\2018 PROJECTS\D18-0087 BROWN MFC-793 WATER WASH
Layout Name: SH 4
Date: 11/28/17 - 11:08 A.M.
ID: JUDYAR

FMT-D2-REV 4 (INL)

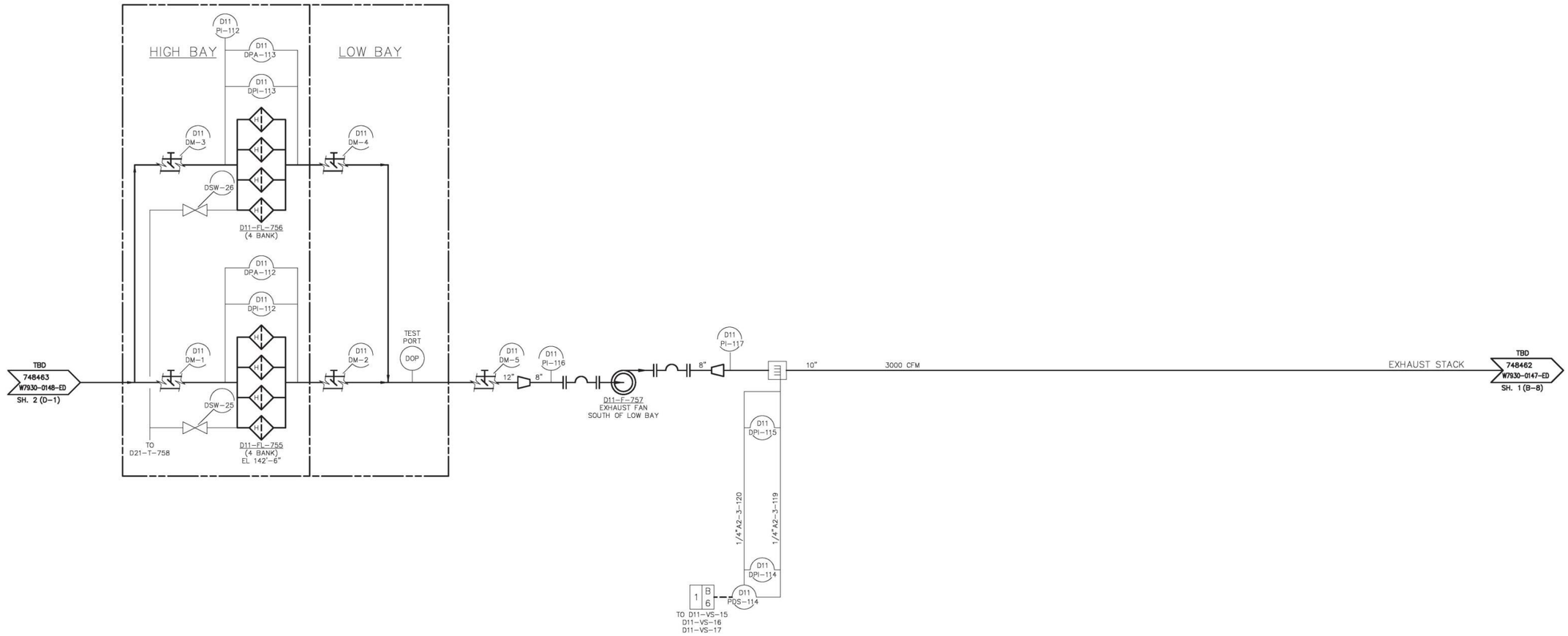

SIZE	CAGE CODE	INDEX CODE NUMBER					DWG-	REV
		AREA	TYPE	SI	DSG			
D	01MF3	273	0793	24	052		748463	6
SCALE: NONE							SHEET 5	

REVISIONS		
REV	DESCRIPTION	EFFECTIVE DATE:
3	REDRAWN WITH CHANGE eCR-595839	8/31/2011

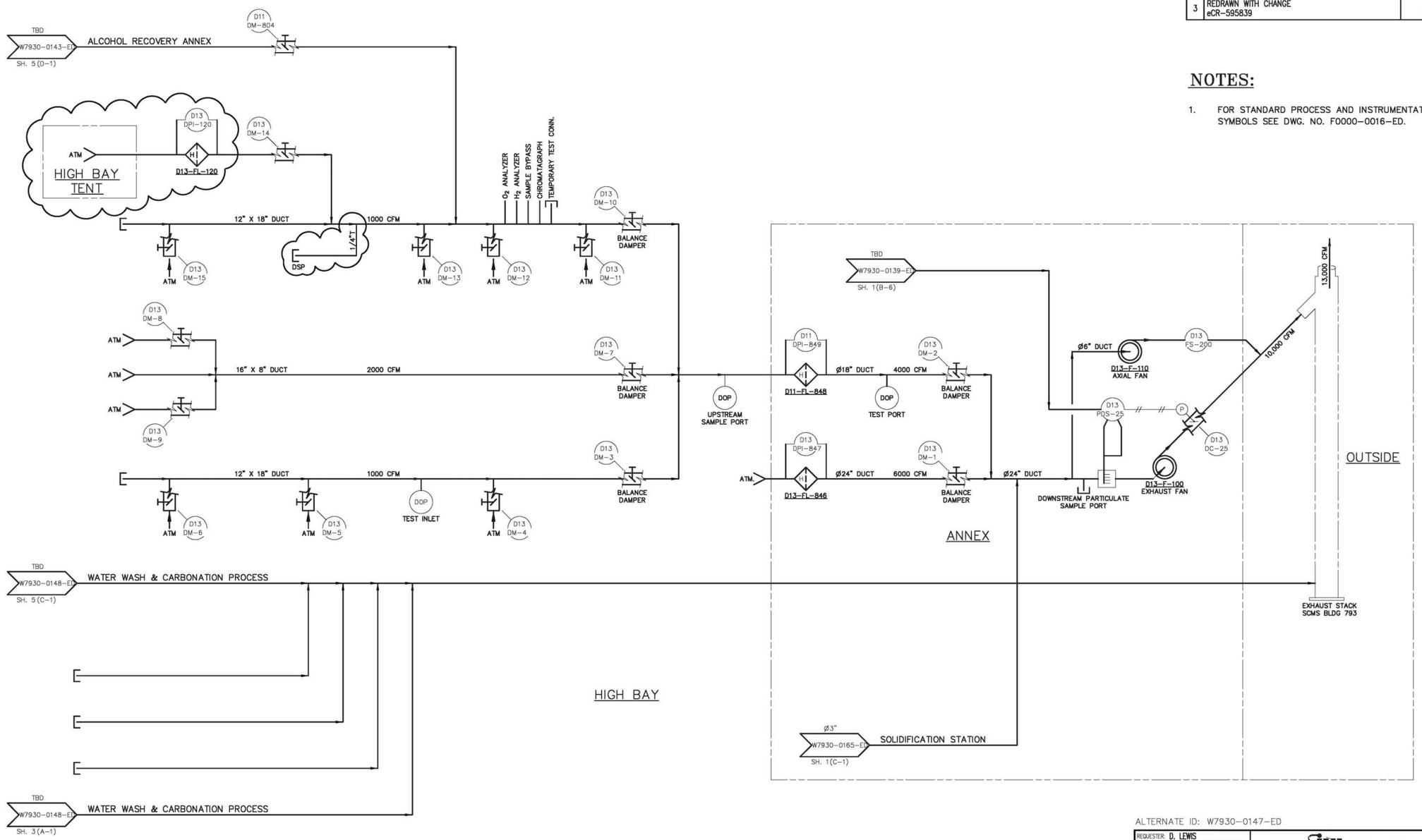

NOTES:

1. FOR STANDARD PROCESS AND INSTRUMENTATION SYMBOLS SEE DWG. NO. F0000-0016-ED.

ALTERNATE ID: W7930-0147-ED

REQUESTER:	D. LEWIS
RESP ENGR:	W. BENJAMIN
DESIGN:	W. BENJAMIN
DRAWN:	E. IMPALA
PROJECT NO.	N/A
SPCL CODE	N/A
FOR REVIEW/APPROVAL SIGNATURES SEE ECR NO.	
EFFECTIVE DATE:	12/4/98

Idaho National Laboratory

MFC/SCMS BLDG 793
SODIUM COMPONENTS MAINTENANCE SHOP
PROCESS VENTILATION SYSTEM

PROCESS & INSTRUMENT DIAGRAM

SIZE	CAGE CODE	INDEX CODE NUMBER (AREA / TYPE / SI / DISC)	DWG NO.	REV
D	01MF3	273 / 0793 / 24 / 052	748462	3

SCALE: NONE SHEET 1 OF 1

File: 748462R3.dwg
Path: Y:\Impaem\0111-0231 - SCMS High Bay Tent Services P&ID
Layout Name: Layout1
Author: IMPAEM

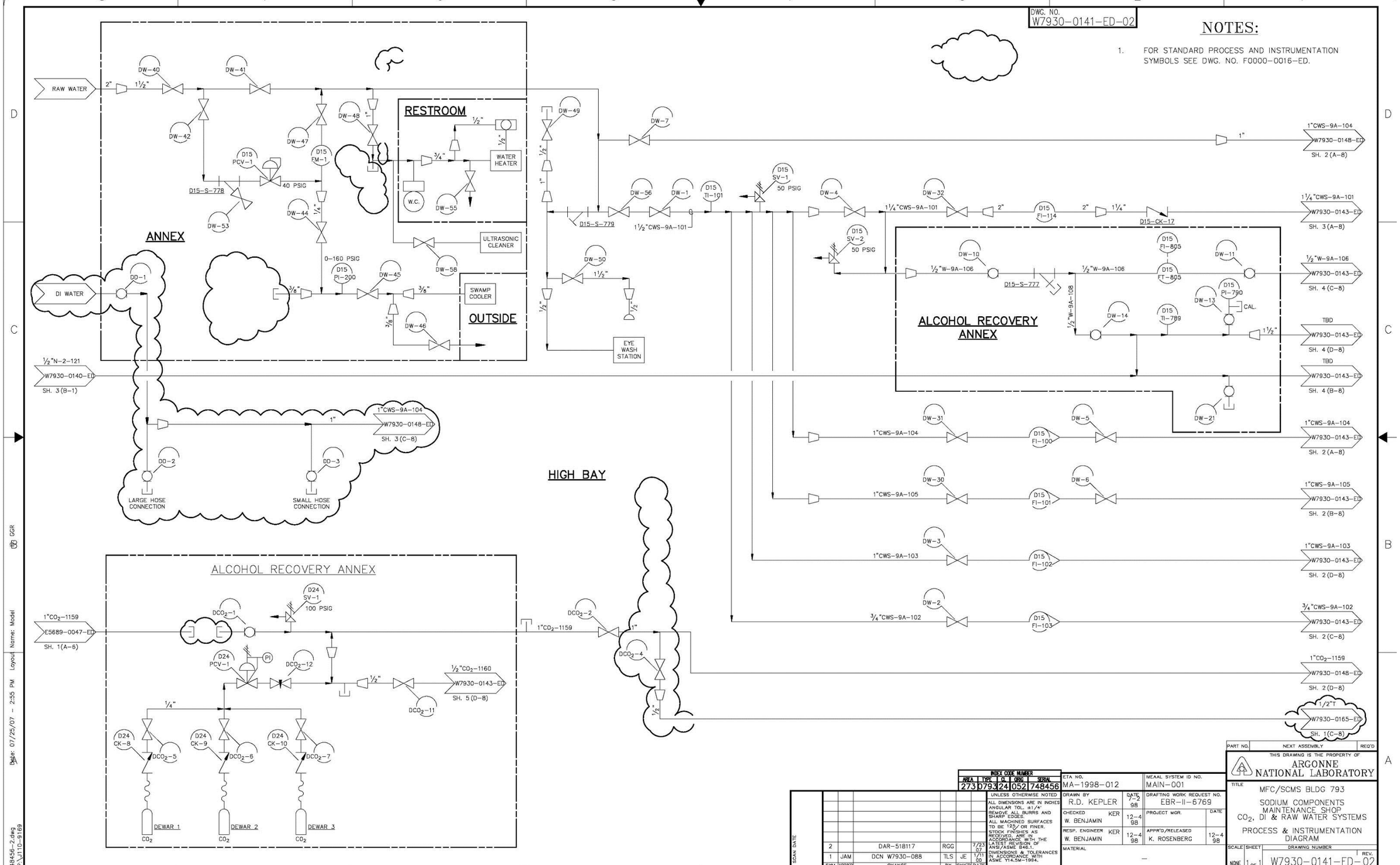
DWG. NO.
W7930-0141-ED-02
NOTES:
1. FOR STANDARD PROCESS AND INSTRUMENTATION SYMBOLS SEE DWG. NO. F0000-0016-ED.
RAW WATER
DI WATER
ANNEX
RESTROOM
WATER HEATER
W.C.
ULTRASONIC CLEANER
SWAMP COOLER
OUTSIDE
EYE WASH STATION
ALCOHOL RECOVERY ANNEX
HIGH BAY
LARGE HOSE CONNECTION
SMALL HOSE CONNECTION
DEWAR 1
DEWAR 2
DEWAR 3
1"CWS-9A-104
W7930-0148-ED
SH. 3 (C-8)
1"CWS-9A-104
W7930-0143-ED
SH. 2 (A-8)
1¼"CWS-9A-101
W7930-0143-ED
SH. 3 (A-8)
½"W-9A-106
W7930-0143-ED
SH. 4 (C-8)
TBD
W7930-0143-ED
SH. 4 (D-8)
TBD
W7930-0143-ED
SH. 4 (B-8)
1"CWS-9A-104
W7930-0143-ED
SH. 2 (A-8)
1"CWS-9A-105
W7930-0143-ED
SH. 2 (B-8)
1"CWS-9A-103
W7930-0143-ED
SH. 2 (D-8)
¾"CWS-9A-102
W7930-0143-ED
SH. 2 (C-8)
1"CO2-1159
W7930-0148-ED
SH. 2 (D-8)
1/2"T
W7930-0165-ED
SH. 1 (C-8)
½"N-2-121
W7930-0140-ED
SH. 3 (B-1)
1"CO2-1159
E5689-0047-ED
SH. 1 (A-6)
½"CO2-1160
W7930-0143-ED
SH. 5 (D-8)
1"CWS-9A-104
1"CWS-9A-105
1"CWS-9A-103
¾"CWS-9A-102
1½"CWS-9A-101
1¼"CWS-9A-101
½"W-9A-106
½"W-9A-108
1"CO2-1159
1/2"CO2-1160
40 PSIG
0-160 PSIG
50 PSIG
100 PSIG
CAL.
ETA NO. MA-1998-012
MEAAL SYSTEM ID NO. MAIN-001
DRAWN BY R.D. KEPLER
DATE 7-2-98
DRAFTING WORK REQUEST NO. EBR-II-6769
CHECKED W. BENJAMIN KER 12-4-98
PROJECT MGR.
RESP. ENGINEER W. BENJAMIN KER 12-4-98
APPR'D/RELEASED K. ROSENBERG 12-4-98
MATERIAL
INDEX CODE NUMBER
AREA 273 TYPE 0793 CL 24 ORIG 052 SERIAL 748456
UNLESS OTHERWISE NOTED
ALL DIMENSIONS ARE IN INCHES ANGULAR TOL. ±1/4°
REMOVE ALL BURRS AND SHARP EDGES.
ALL MACHINED SURFACES TO BE 125/ OR FINER.
STOCK FINISHES AS RECEIVED, ARE IN ACCORDANCE WITH THE LATEST REVISION OF ANSI/ASME B46.1.
DIMENSIONS & TOLERANCES IN ACCORDANCE WITH ASME Y14.5M-1994.
2 DAR-518117 RGG 7/23/07
1 JAM DCN W7930-088 TLS JE 1/11/00
SYM APPR'D CHANGE BY CHK'D DATE
SCAN DATE
PART NO. NEXT ASSEMBLY REQ'D
THIS DRAWING IS THE PROPERTY OF
ARGONNE NATIONAL LABORATORY
TITLE
MFC/SCMS BLDG 793
SODIUM COMPONENTS MAINTENANCE SHOP
CO2, DI & RAW WATER SYSTEMS
PROCESS & INSTRUMENTATION DIAGRAM
SCALE NONE
SHEET 1 OF 1
DRAWING NUMBER W7930-0141-ED-02
REV. 02
File: 748456-2.dwg
Path: P:\J110-9169
Date: 07/25/07 - 2:55 PM
Layout Name: Model
GGR

2	1	SHEET	REV STATUS OF SHEETS	DWG. NO. W7930-0142-ED-01
1	1	REV		

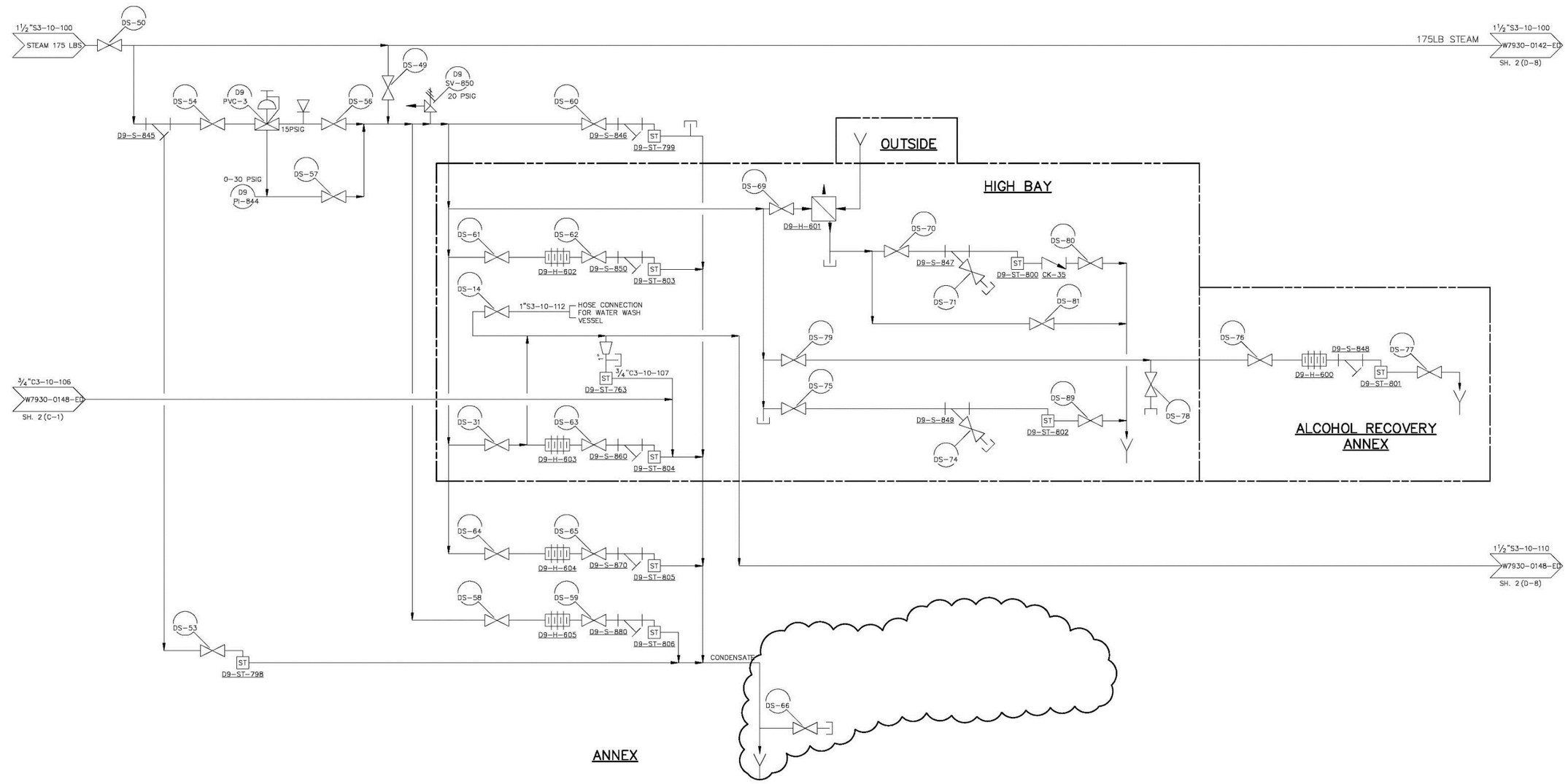

NOTES:

1. FOR STANDARD PROCESS AND INSTRUMENTATION SYMBOLS SEE DWG. NO. F0000-0016-ED.

SYM	APPR'D	CHANGE	BY	CHK'D	DATE
1		DAR-518117	RGG		7/23/07

MICRO-FILMED DATE

UNLESS OTHERWISE NOTED
ALL DIMENSIONS ARE IN INCHES
REMOVE ALL BURRS AND SHARP EDGES.
ALL MACHINED SURFACES TO BE 125√ OR FINER.
STOCK FINISHES AS RECEIVED, ARE IN ACCORDANCE WITH THE LATEST REVISION OF ANSI/ASME B46.1.
DIMENSIONS & TOLERANCES IN ACCORDANCE WITH THE LATEST REVISION OF ANSI Y14.5M.

		DATE
DRAWN BY	R.D. KEPLER	98
CHECKED	W. BENJAMIN KER	12-4 98
RESP. ENGINEER	W. BENJAMIN KER	12-4 98
MATERIAL	–	

SERVICE REQUEST NO.	
EBR-II-6769	
PROJECT MGR.	DATE
APPR'D/RELEASED K. ROSENBERG	12-4 98

INDEX CODE NUMBER				
AREA	TYPE	CL	ORG	SERIAL
273	079	3	24	052 748457

PART NO.	NEXT ASSEMBLY	REQ'D

THIS DRAWING IS THE PROPERTY OF
ARGONNE NATIONAL LABORATORY

TITLE
MFC/SCMS BLDG 793
SODIUM COMPONENTS MAINTENANCE SHOP
STEAM & CONDENSATE SYSTEM
PROCESS & INSTRUMENTATION DIAGRAM

SCALE	SHEET	DRAWING NUMBER	REV.
NONE	1 of 2	W7930-0142-ED-01	

File: 748437-1.dwg
Path: P:\J110-9169
Date: 07/25/07 – 3:05 PM Layout Name: SH 1
CGR

DWG. NO.
W7930-0142-ED-01

HIGH BAY

ALCOHOL RECOVERY ANNEX

1½"S3-10-100 W7930-0142-ED SH. 1(D-1) 175 LBS STEAM
1½"S3-10-102 W7930-0143-ED SH. 3(A-8)
1"S3-10-113 W7930-0143-ED SH. 4(B-8)
½"C3-10-109 W7930-0143-ED SH. 4(A-1)
1"S3-10-114 W7930-0143-ED SH. 5(B-8)
1¼"S3-10-101 W7930-0143-ED SH. 2(A-8)
1¼"S3-10-100 W7930-0143-ED SH. 2(A-8)
TBD W7930-0148-ED SH. 2(C-8)
TBD W7930-0143-ED SH. 1(A-4) ALCOHOL STORAGE PAD WATER DRAIN LINE Ø1"
1½"CWR-9A-103 W7930-0143-ED SH. 2(D-1)
1"S3-10-105 W7930-0143-ED SH. 2(A-2)
1"S3-10-103 W7930-0143-ED SH. 2(A-1)
TBD W7930-0143-ED SH. 3(B-1)
TBD W7930-0143-ED SH. 4(B-1)
TBD W7930-0143-ED SH. 5(B-1)
1¼"S3-10-100 W7930-0148-ED SH. 2(A-4)
6" DRAIN LINE TBD TBD TBD

DS-51 1½"S3-10-102 DS-9 ½ D9-S-749 DS-90 D9 PVC-2 ½" 1½" DS-82 ¼" D9 TI-109 D9 PI-107 DS-83 1½" 1"
1"S3-10-113 D9-S-766 DS-17 1"S3-10-113 DS-24 DS-25 DS-26 D9 PI-808 CAL.
DS-18 1"S3-10-114 DS-19 ½" DS-21 D9 PI-770 CAL. D9 TI-786 DS-35 D9-S-798 ST D9-ST-797 ST D9-ST-843 DC-28 ½"C3-10-109 TEST DC-29 D9-CK-24 D9-CK-33
DS-1 ½" D9-S-723 D9 PVC-1 175 LB 25 LB DS-2 DS-84 ¼" DS-32 DS-86 ¼" DS-88 D9 PI-100 D9 TI-100 1½"S3-10-100 D9 PI-846 DS-85 PS-845 DS-87 D9 PCV-112 TI-107 D9 PI-700 DS-42 DS-33 1¼" TO TEMPORARY EXPERIMENT 25 PSIG D9 SV-726
DS-7 D9-S-724 ST D9-ST-718 DS-8 1"S3-10-106 1"C3-10-102 1"C3-10-103
DS-4 D9-S-725 ST D9-ST-717 DS-5 1"S3-10-104 1"C3-10-100 1"C3-10-101
DS-11 D9-S-750 ST D9-ST-742 DS-12 1¼"C3-10-104
DS-91 D9-X-840 HYDRAULIC JET CLEANER DETERGENT PICKUP FLOOR DRAIN DS-13 ¾"S3-10-109 ½" 1½"
DW-16 D15 TI-791 D15 FI-833 D15-CK-23 ½"W-9A-104 1½" DW-17 TEST DC-39
½" D9 FI-830 D9-S-772 DC-23 D9 PI-843 TEST ST D9-ST-773 ⅜"C3-10-108 DC-31 DC-30 DS-22 ½"C3-10-108 D9-CK-28

INDEX CODE NUMBER				
AREA	TYPE	SA	ORIG	SERIAL
273	D793	24	052	748457

SYM	APPR'D	CHANGE	BY	CHK'D	DATE
		SEE SHEET 1			

MICRO-FILMED DATE

UNLESS OTHERWISE NOTED
ALL DIMENSIONS ARE IN INCHES
REMOVE ALL BURRS AND SHARP EDGES.
ALL MACHINED SURFACES TO BE 125√ OR FINER.
STOCK FINISHES AS RECEIVED, ARE IN ACCORDANCE WITH THE LATEST REVISION OF ANSI/ASME B46.1.
DIMENSIONS & TOLERANCES IN ACCORDANCE WITH THE LATEST REVISION OF ANSI Y14.5M.

DRAWN BY R.D. KEPLER	DATE 10-15 98	SERVICE REQUEST NO. EBR-II-6769	
CHECKED W. BENJAMIN KER	12-4 98	PROJECT MGR.	DATE
RESP. ENGINEER W. BENJAMIN KER	12-4 98	APPR'D/RELEASED K. ROSENBERG	12-4 98
MATERIAL –			

PART NO.	NEXT ASSEMBLY	REQ'D

THIS DRAWING IS THE PROPERTY OF
ARGONNE NATIONAL LABORATORY

TITLE
MFC/SCMS BLDG 793
SODIUM COMPONENTS MAINTENANCE SHOP
STEAM & CONDENSATE SYSTEM
PROCESS & INSTRUMENTATION DIAGRAM

SCALE	SHEET	DRAWING NUMBER	REV.
NONE	2 OF 2	W7930-0142-ED-01	

File: 748457-1.dwg
Path: P:\J110-9169
Date: 07/25/07 – 3:05 PM Layout Name: Sht 2
GGR

REVISIONS		
REV	DESCRIPTION	EFFECTIVE DATE:
4	REDRAWN WITH CHANGE eCR-595839	8/31/2011
5	ADDED DRAWING AFFECTED BY STATEMENT FOR EJ-475, eCR-596266	10/3/2011
6	INCORPORATED INFORMATION FROM EJ-475, INTERIM DRAWING 776471, AS-BUILT AS OF 9/24/2012 SEE eCR-608008	11/29/2012

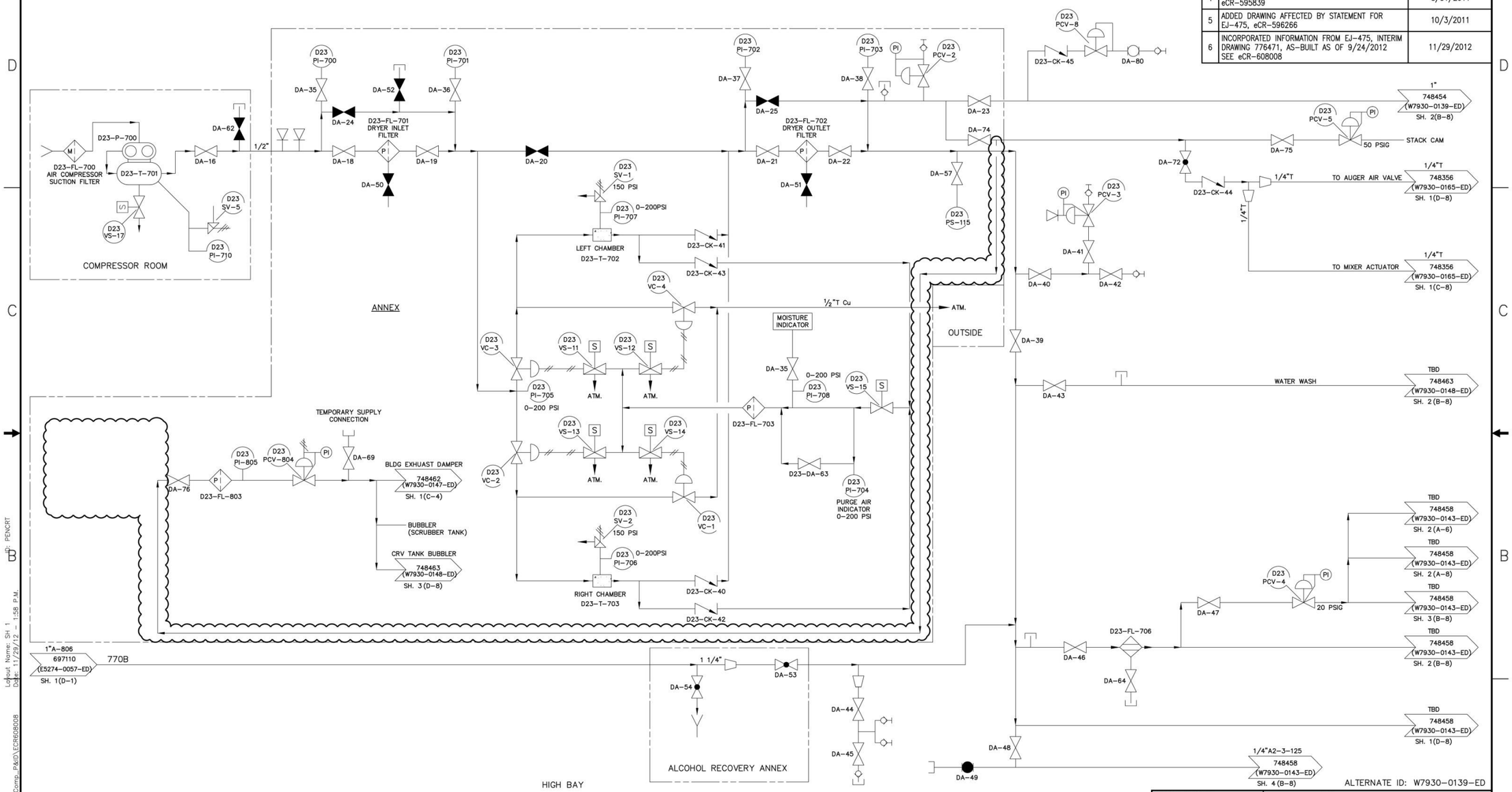

ALTERNATE ID: W7930-0139-ED

NOTES:

1. FOR STANDARD PROCESS AND INSTRUMENTATION SYMBOLS SEE DWG. NO. F0000-0016-ED.

REQUESTER:	D. LEWIS
RESP ENGR:	W. BENJAMIN
DESIGN:	W. BENJAMIN
DRAWN:	R.D. KEPLER
PROJECT NO.	N/A
SPCL CODE	N/A
FOR REVIEW/APPROVAL SIGNATURES SEE ECR NO.	595839
EFFECTIVE DATE:	8/31/2011

Idaho National Laboratory

MFC/SCMS BLDG 793
SODIUM COMPONENTS MAINTENANCE SHOP
AIR COMPRESSOR SYSTEM

PROCESS AND INSTRUMENTATION DIAGRAM

SIZE	CAGE CODE	INDEX CODE NUMBER				DWG NO.	REV
		AREA	TYPE	Q.	ORIG.		
D	01MF3	273	0793	24	052	748454	6

SCALE: NONE SHEET 1 OF 2

File: 748454R6.dwg
Path: P:\2012_PROJECTS\MFC-793_AirComp_P&ID\ECR608008
Layout Name: SH 1 Date: 11/29/12 - 1:58 P.M. By: PENCRT

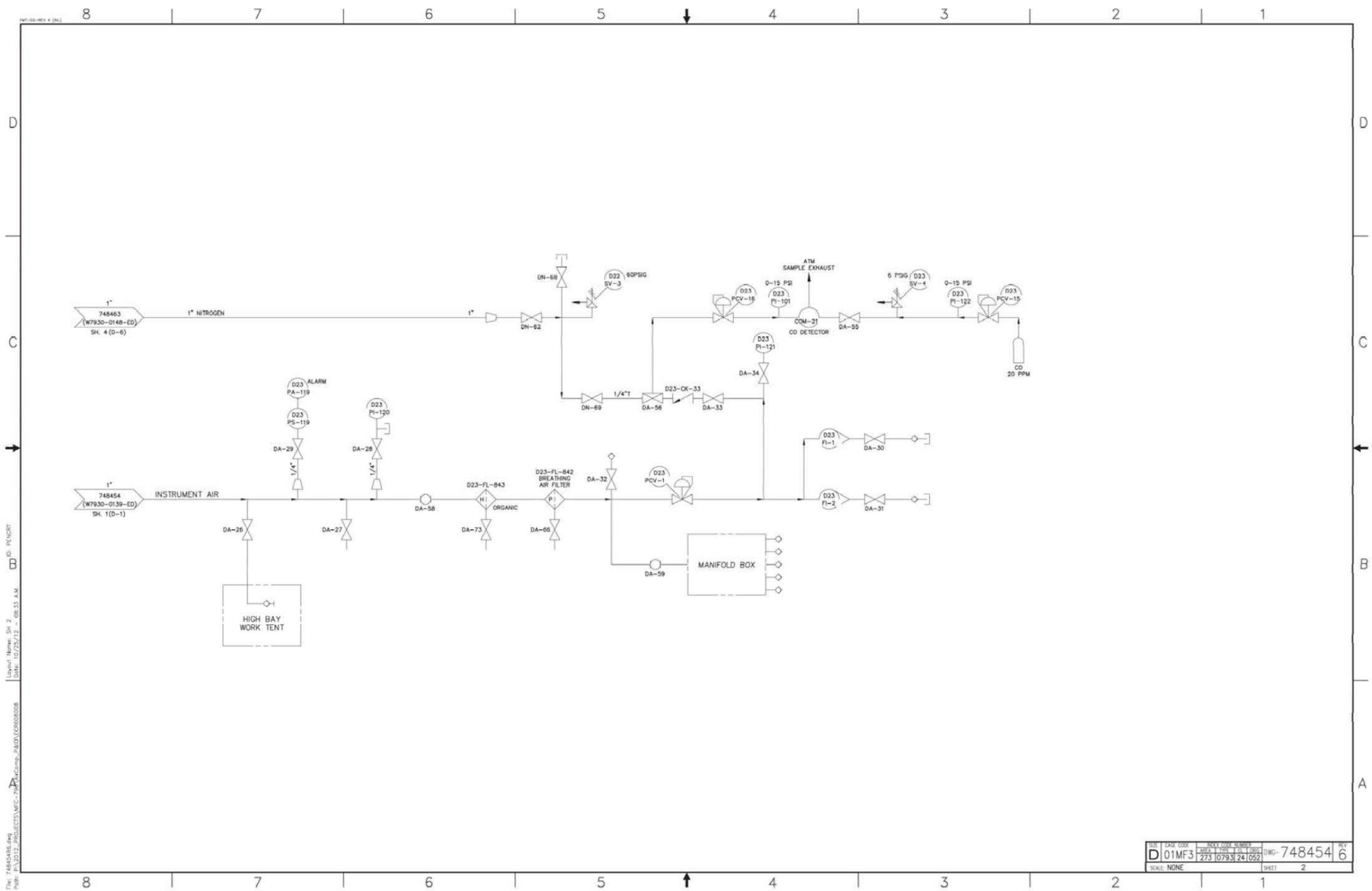

SIZE	CAGE CODE	INDEX CODE NUMBER				DWG-	REV
D	01MF3	AREA	SYM	CL	DIST	748454	6
		273	0793	24	052		
SCALE: NONE						SHEET 2	

File: 748454R6.dwg
Path: P:\2012_PROJECTS\MFC-79\CAVCamp_P&ID\DOR008008
Layout Name: SH 2
Date: 10/25/12 - 08:33 A.M.
ID: PENCRT

3	2	1	SHEET
2	2	2	REV

REV STATUS OF SHEETS

DWG. NO. W7930-0140-ED-02

NOTES:

1. FOR STANDARD PROCESS AND INSTRUMENTATION SYMBOLS SEE DWG. NO. F0000-0016-ED.

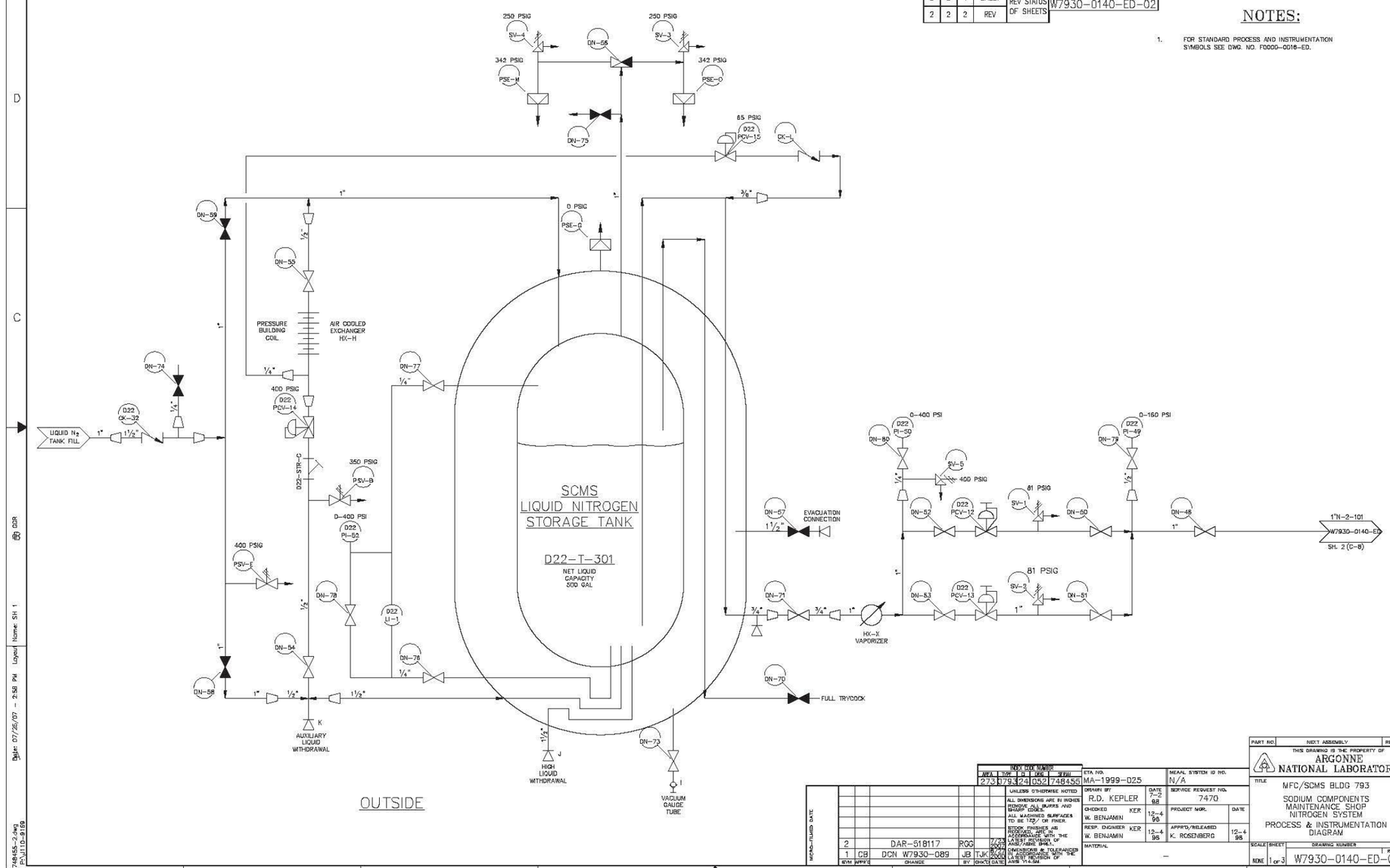

NO.	PCE NUMBER				
AREA	TYPE	YR	SERIAL	SFIX	
273	079	24	052	748455	

2		DAR-518117	RGC	7/25/2007	
1	CB	DCN W7930-089	JB	TJK	8/20/2004
SYM	APPR'D	CHANGE	BY	CHK'D	DATE

UNLESS OTHERWISE NOTED
ALL DIMENSIONS ARE IN INCHES REMOVE ALL BURRS AND SHARP EDGES.
ALL MACHINED SURFACES TO BE 125/ OR FINER.
WELDING FINISHES AS PER AWS D1.1 IN ACCORDANCE WITH THE LATEST REVISION OF ANSI/ASME B16.11.
DIMENSIONS & TOLERANCES IN ACCORDANCE WITH THE LATEST REVISION OF ANSI Y14.5M.

MICRO-FILMED DATE

ETA NO. MA-1999-D25
MECAL SYSTEM ID NO. N/A
DRAWN BY R.D. KEPLER DATE 7-2-98
SERVICE REQUEST NO. 7470
CHECKED W. BENJAMIN KER 12-4-98
PROJECT NOR. DATE
RESP. ENGINEER W. BENJAMIN KER 12-4-98
APPR'D/RELEASED K. ROSENBERG 12-4-98
MATERIAL –

PART NO.	NEXT ASSEMBLY	REQ'D

THIS DRAWING IS THE PROPERTY OF ARGONNE NATIONAL LABORATORY

TITLE
MFC/SCMS BLDG 793
SODIUM COMPONENTS MAINTENANCE SHOP NITROGEN SYSTEM
PROCESS & INSTRUMENTATION DIAGRAM

SCALE	SHEET	DRAWING NUMBER	REV.
NONE	1 of 3	W7930-0140-ED-02	

File: 748455-2.dwg
Path: P:\J10-9169
Date: 07/26/07 – 2:58 PM Layout Name: SH 1

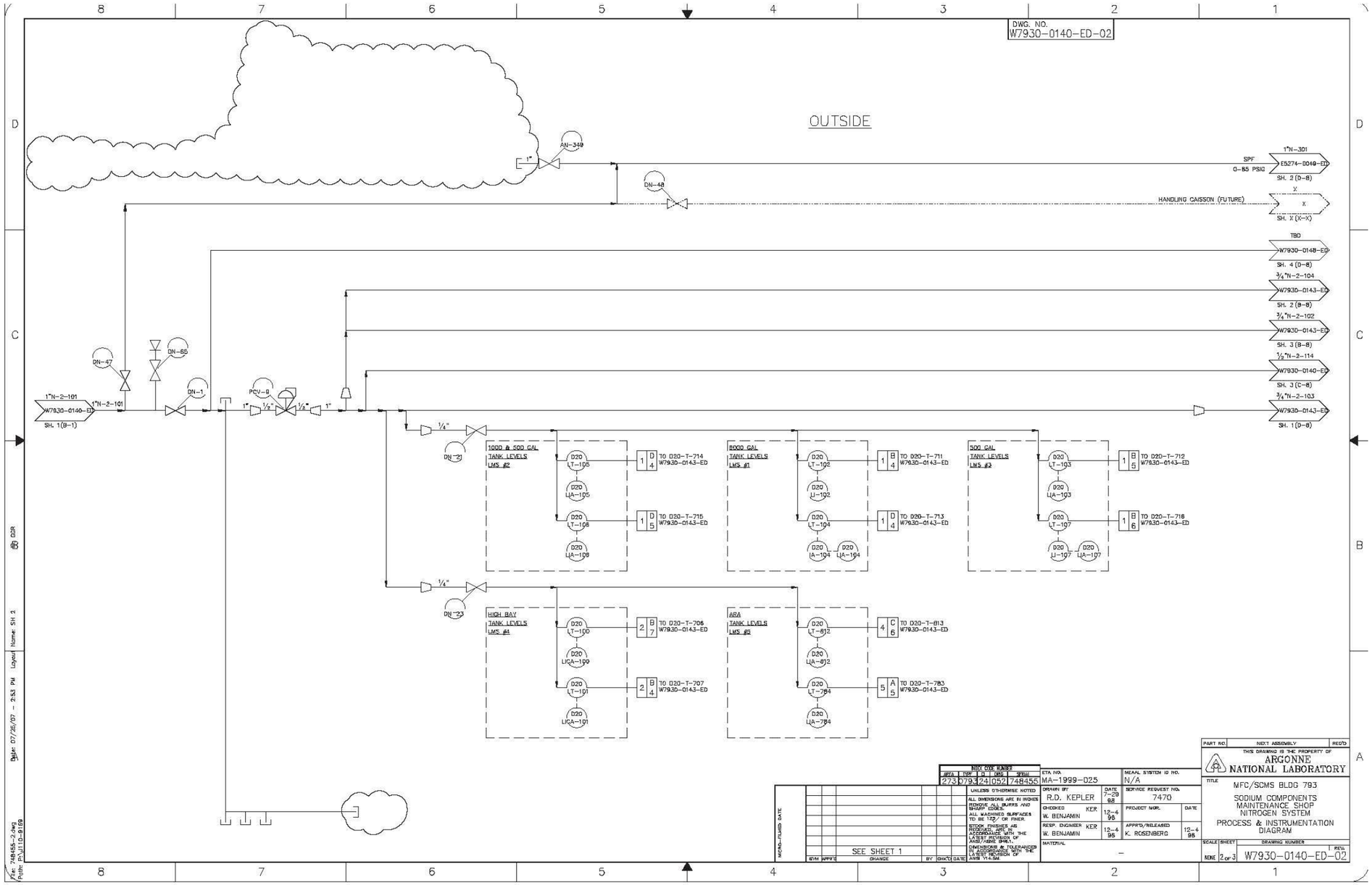
DWG. NO.
W7930-0140-ED-02
OUTSIDE
AN-349
DN-48
1"N-301
E5274-0049-ED
SPF
0-85 PSIG
SH. 2 (D-8)
HANDLING CAISSON (FUTURE)
SH. X (X-X)
TBD
W7930-0148-ED
SH. 4 (D-8)
3/4"N-2-104
W7930-0143-ED
SH. 2 (B-8)
3/4"N-2-102
W7930-0143-ED
SH. 3 (B-8)
1/2"N-2-114
W7930-0140-ED
SH. 3 (C-8)
3/4"N-2-103
W7930-0143-ED
SH. 1 (D-8)
DN-47
DN-65
DN-1
PCV-9
1"N-2-101
W7930-0140-ED
SH. 1 (B-1)
1/4"
DN-21
1000 & 500 GAL
TANK LEVELS
LMS #2
D20 LT-105
D20 LIA-105
D20 LT-106
D20 LIA-106
TO D20-T-714 W7930-0143-ED
TO D20-T-715 W7930-0143-ED
8000 GAL
TANK LEVELS
LMS #1
D20 LT-102
D20 LI-102
D20 LT-104
D20 LIA-104
TO D20-T-711 W7930-0143-ED
TO D20-T-713 W7930-0143-ED
500 GAL
TANK LEVELS
LMS #3
D20 LT-103
D20 LIA-103
D20 LT-107
D20 LI-107
D20 LIA-107
TO D20-T-712 W7930-0143-ED
TO D20-T-716 W7930-0143-ED
DN-23
HIGH BAY
TANK LEVELS
LMS #4
D20 LT-100
D20 LICA-100
D20 LT-101
D20 LICA-101
TO D20-T-706 W7930-0143-ED
TO D20-T-707 W7930-0143-ED
ARA
TANK LEVELS
LMS #5
D20 LT-812
D20 LIA-812
D20 LT-784
D20 LIA-784
TO D20-T-813 W7930-0143-ED
TO D20-T-783 W7930-0143-ED
SEE SHEET 1
MICRO-FILMED DATE
NEXT ASSEMBLY
REQ'D
THIS DRAWING IS THE PROPERTY OF
ARGONNE NATIONAL LABORATORY
ETA NO. MA-1999-025
MEAN. SYSTEM ID NO. N/A
DRAWN BY R.D. KEPLER
DATE 7-29-98
SERVICE REQUEST NO. 7470
CHECKED W. BENJAMIN KER 12-4-98
PROJECT MGR.
RESP. ENGINEER W. BENJAMIN KER 12-4-98
APPR'D/RELEASED K. ROSENBERG 12-4-98
MATERIAL -
TITLE
MFC/SCMS BLDG 793
SODIUM COMPONENTS
MAINTENANCE SHOP
NITROGEN SYSTEM
PROCESS & INSTRUMENTATION
DIAGRAM
SCALE NONE
SHEET 2 OF 3
DRAWING NUMBER W7930-0140-ED-02
REV.
File: 748455-2.dwg
Path: P:\J110-9169
Date: 07/25/07 - 2:53 PM
Layout Name: SH 2
QDR

DWG. NO.
W7930-0140-ED-02

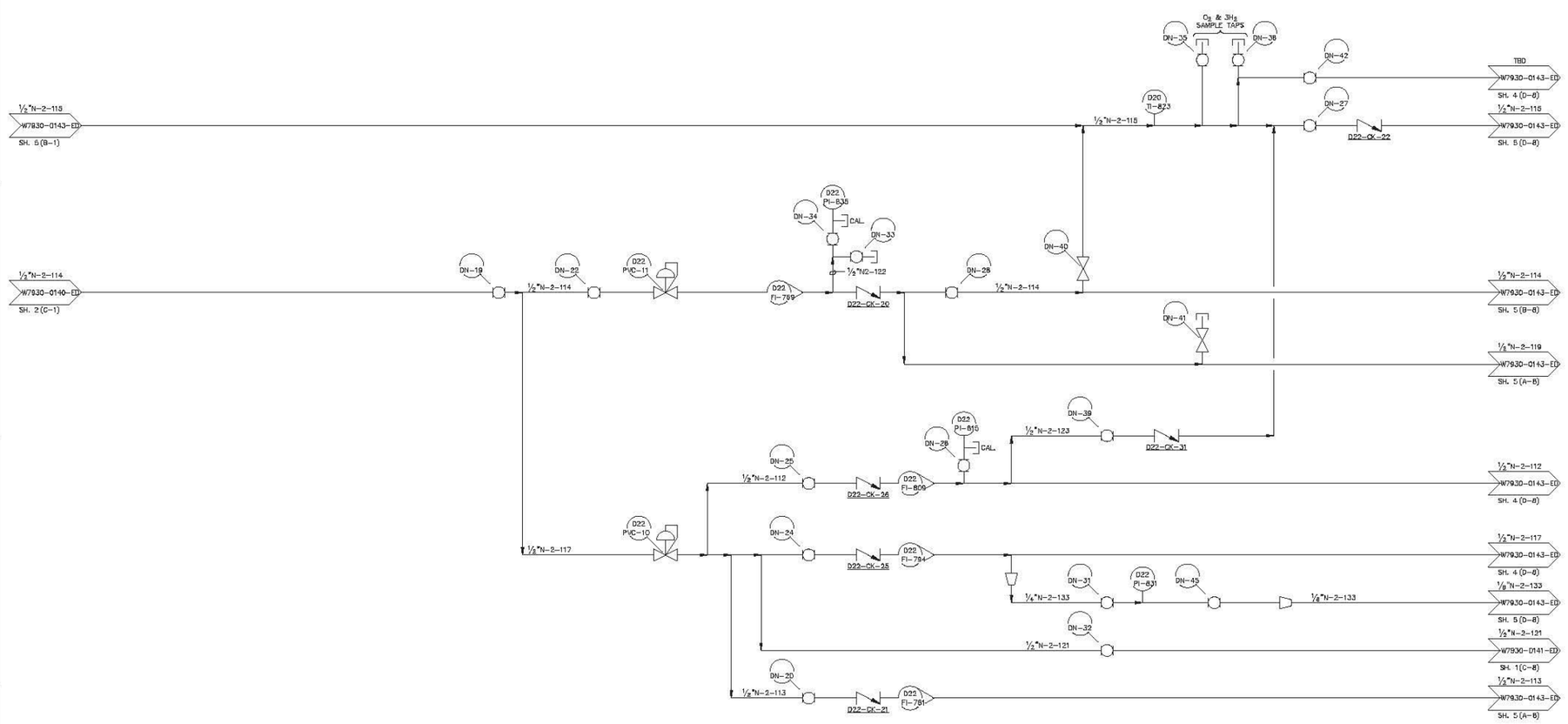

PART NO.	NEXT ASSEMBLY	REQ'D

THIS DRAWING IS THE PROPERTY OF
ARGONNE NATIONAL LABORATORY

TITLE
MFC/SCMS BLDG 793
SODIUM COMPONENTS MAINTENANCE SHOP
NITROGEN SYSTEM
PROCESS & INSTRUMENTATION DIAGRAM

SCALE	SHEET	DRAWING NUMBER	REV.
NONE	3 of 3	W7930-0140-ED-02	

AREA	TYP	LA	DIST	SEQ
273	D793	24	052	748455

ETA NO.	MA-1999-025
MEAPL SYSTEM ID NO.	N/A
DRAWN BY	R.D. KEPLER — DATE 98
CHECKED	KER — W. BENJAMIN — 12-4 98
RESP. ENGINEER	KER — W. BENJAMIN — 12-4 98
SERVICE REQUEST NO.	7470
PROJECT MGR.	DATE
APPR'D/RELEASED	K. ROSENBERG — 12-4 98
MATERIAL	–

UNLESS OTHERWISE NOTED
ALL DIMENSIONS ARE IN INCHES REMOVE ALL BURRS AND BREAK EDGES
ALL MACHINED SURFACES TO BE 125/ OR FINER.
STOCK FINISHES AS SPECIFIED ARE IN ACCORDANCE WITH THE LATEST REVISION OF ANSI/ASME B46.1.
DIMENSIONS & TOLERANCES ARE IN ACCORDANCE WITH THE LATEST REVISION OF ANSI Y14.5M

MICRO-FILMED DATE

SYM	APPR'D	CHANGE	BY	CHK'D	DATE
		SEE SHEET 1			

File: 748455-2.dwg
Path: P:\JT10-9169
Date: 07/26/07 – 2:52 PM Layout Name: SH 3

Attachment D-10

Photograph of SCMS Water Wash Vessel and Venturi Scrubber

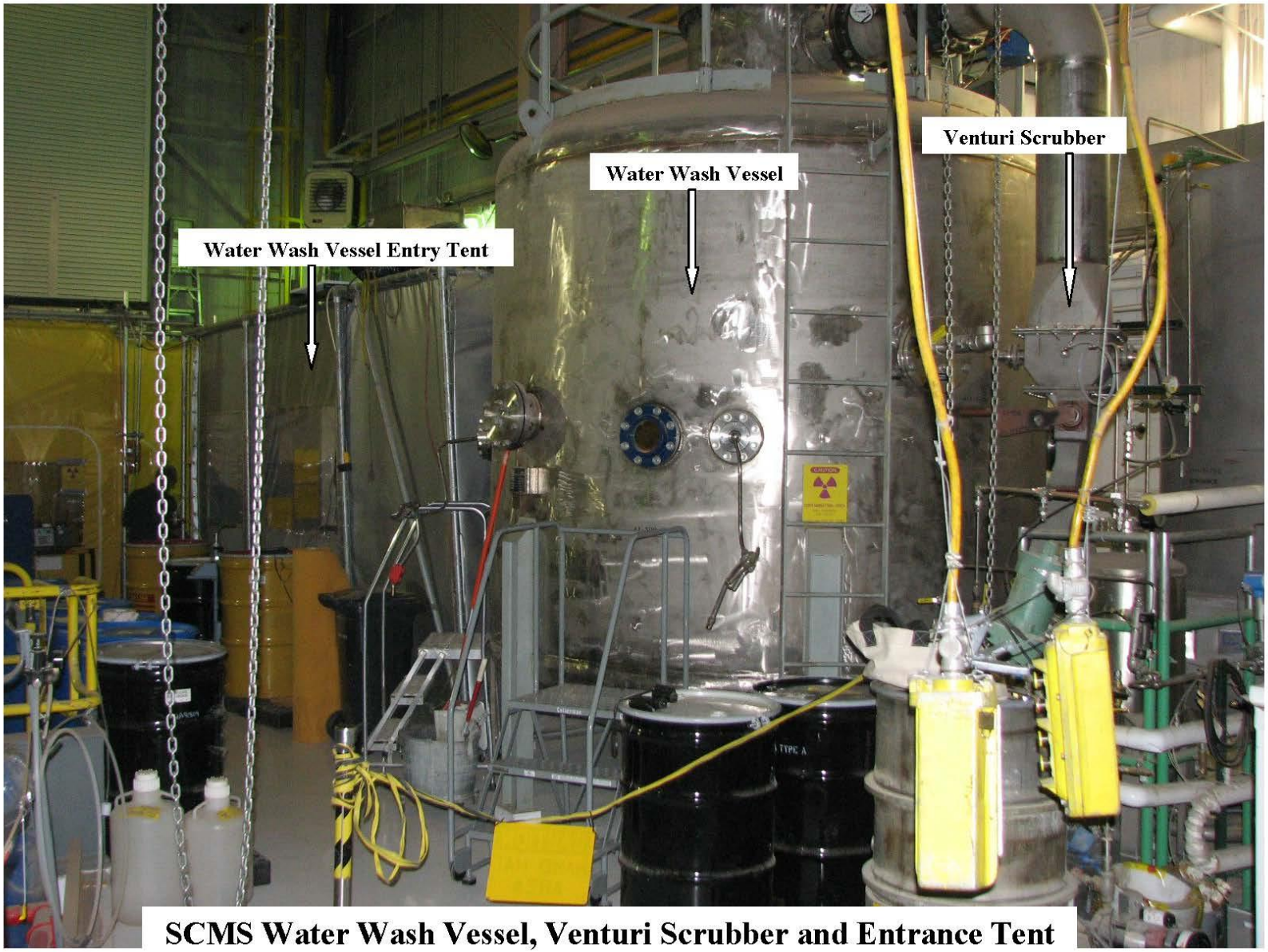

SCMS Water Wash Vessel, Venturi Scrubber and Entrance Tent
Photo taken August 2013

Attachment D-11

Drawing of SCMS Water Wash Vessel (Example)

692267 (Sheet 1-5 of 5) (Alternate Id: E5179-0005-DD)

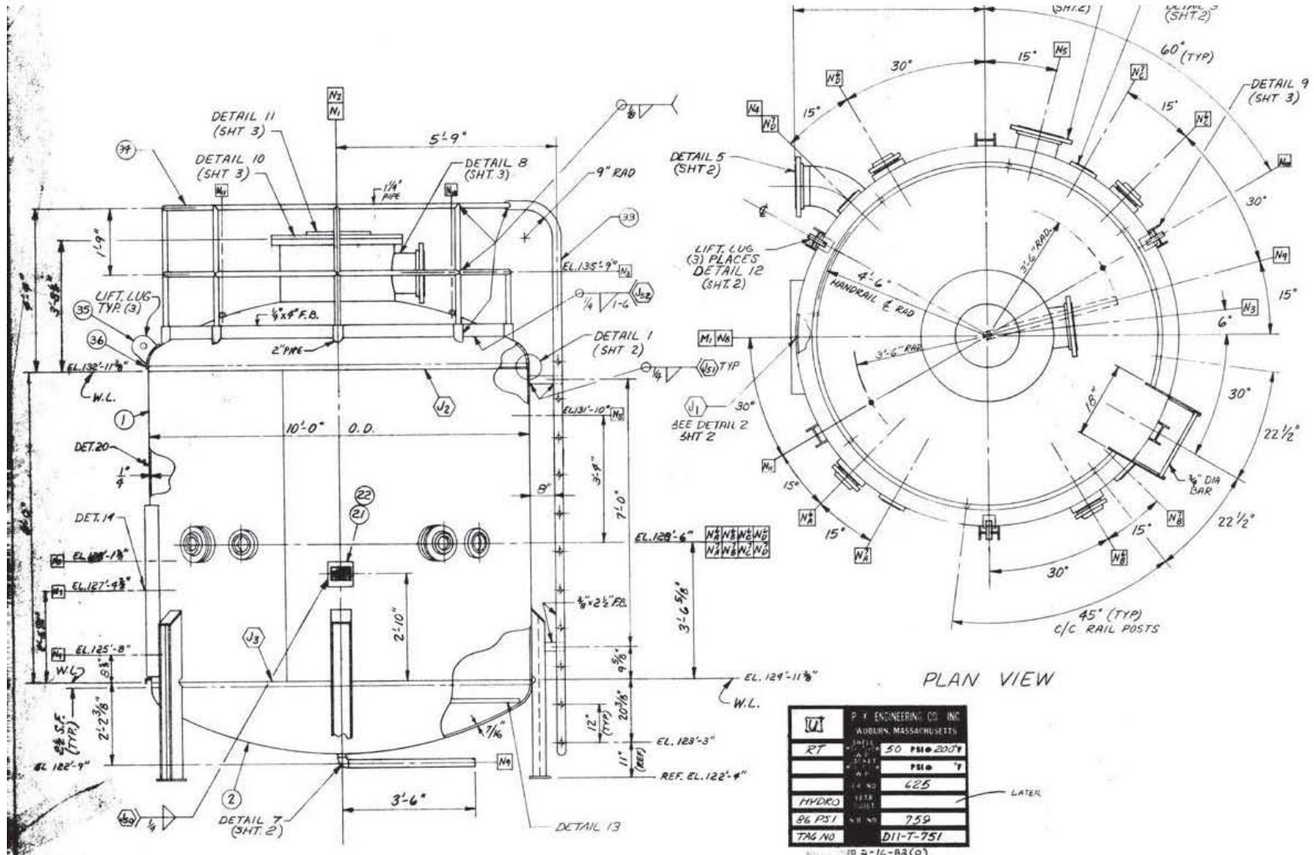

ELEVATION
SCALE: ¾" = 1'-0"

PLAN VIEW

	2	2	TO 10'-0" O.D. X 5'-0" LG CYLINDER)
			7/16" THK X 10'-0" O.D. X 2'-8" S.F. ASME F & D HEAD
	3	4	1½" THK X 9¼ DIA RING (MACH. PER DET 3)
	4	4	1½" X 11¼" DIA RING (MACH PER DET 4)
	5	3	12"-150# RAISED FACE SLIP-ON FLNG.
	6	1	12"-SCH 40-S PIPE X 3'-9" (MACH. PER DET 6)
	7	1	12"-SCH 40-S 45° LR ELBOW
	8	1	12"-SCH 40-S PIPE X 2" (LGTH TO SUIT DET 8)
	9	2	16" OD X 12⅛" I.D X ¼" THK. RETR. COLLAR
	10	1	12"-SCH 40-S PIPE X 7'-9" LG.
	11	1	2"-SCH 40-S PIPE 1" LG.
	12	1	2"-SCH 40-S 90° S.R. ELBOW
	13	1	2"-SCH 40-S PIPE 3¼" LG.
	14	1	1'-8⅝" X 9'-4¾" X ¼" THK (ROLL TO 36" O.D. X 1'-8⅝" LG. CYL W/28 FINISH INSIDE)
	15	1	3'-8⅞" OD X 3'-0⅛" I.D. X 2¾" THK STEEL RING (MACH PER DET #5)
	16	1	12"-SCH 40-S PIPE ½" LG (LGTH TO SUIT DET #8)
	17	6	W 6" X 9# WIDE FLANGE STEEL BEAM X 5' LG (CUT PER DET. 9)
	18	6	6" X 8" X ½" THK PLATE
	19	6	6" X 6" X ¼" R. (FIN. SIZE TO SUIT DET 9)
	20	1	3'-5¼" DIA X ¼" THK STL. CIR. (MACH PER DETAIL #10)
	21	1	PXE NAMEPLATE
	22	1	NAMEPLATE BRKT.
	23	1	1'-7" DIA X ½" THK SS R. (MACH PER DET. #11)
	24	20	5/8"-11 UNC HEX HD. STEEL BOLTS 1¼" LG. UNDER HD THREADED FULL LNTH.
	25	50	¾"-10 UNC X 6" LG. STEEL STUD (FULL THREADED)
	26	100	¾"-10 UNC HEX NUTS
	27	1	3'-1⅝ OD X 3'-0⅛" X ⅛" THK COMPRESSED ASBESTOS GASKET
	28	1	1'-4" OD X 1'-0¾" I.D. X ⅛" THK COMPRESSED ASBESTOS GASKET
	29	4	8" OD X 6" I.D. X ⅛" THK COMPRESSED ASBESTOS GASKET
	30	4	6" SIZE FLANGED TYP. F CYCLOPS SIGHT GLASS W/T 316 S/S INSERTS
	31	2	8" DIA. SPARE SIGHT GLASS W/T 316
	32	8	¾"-10 UNC HEX HD. BOLTS 2" LG. UNDER HEAD FULL THREADED
	33	1	LADDER AND ASSEMBLY
	34	1	HAND RAILING AND ASSEMBLY
	35	3	6" X 10" X ¾" THK (CUT TO SUIT DETAIL #2)
N/A	36	3	4" X 10" X ¼" THK (CUT TO SUIT DETAIL #2)

"SEE SHT. 4 FOR CONTINUATION OF BILL OF MAT'L"
"SEE SHT. 4 FOR GENERAL NOTES"
1 VESSEL REQ'D

			P.X. ENGINEERING CO. INC. WOBURN, MASSACHUSETTS		
RT	SHELL	50 PSI @ 200°F			
	TUBE	PSI @ °F			
HYDRO	SHELL	625			
	TUBE				
86 PSI	SHELL	759			
TAG NO		D11-T-751			

ID 2-16-82(0)

LATER

N_1, N_2	2	¾"	ELECTRICAL	CPLG
N_4	1	2"	DRAIN	SQ. END
N_5	1	4"	VIEWING WINDOW	1⅛" R.F.
N_7	4	4"	LANCE PENETRATION	1⅛" R.F.
N_8	4	6"	VIEWING WINDOW	1⅛" R.F.
N_9	1	1½"	UTILITIES	1⅛" R.F.
N_{10}	1	12"	AIR INLET	1⅛" R.F.
N_3	1	12"	AIR OUTLET	1⅛" R.F.
N_2	1	12"	EQUIPMENT PORT	SPECIAL
N_1	1	36"	EQUIPMENT PORT	1⅛" R.F.
M_1	1	30x48	MANHOLE	SPECIAL
CONN	QTY.	SIZE	SERVICE	FACING

LIST OF CONNECTIONS

J_1 THRU J_{55}	VP-010	VISUAL	J_1 THRU J_{55}	W-40	5/4 SMAW
				W-45	5/4 SAW
J_{46}, J_{47}	LP-010	LIQUID PENAT		W-42	2/16 5/16 SMAW
J_1, J_2, J_3, $J_{15/16}$, J_{25}, J_{44}	RT-012	100% X-RAY		W-59	1/4 SMAW
				W-60	5/4 GTAW
JOINT NO.	SPEC. NO.	PROCESS	JOINT NO.	SPEC. NO.	PROCESS
NDE DATA			WELDING DATA		

CORROSION ALLOWANCE .010"

CODE ASME SECTION VIII DIV 1	
SYMBOL STAMP U	
OPER. PRESS.	TEMP.
DESIGN PRESS. 50 PSIG	TEMP. 200°F
MAWP	TEMP.
VACUUM - 2.16 PSIG	
WEIGHT EMPTY 11500 LBS.	
WEIGHT FULL 63900 LBS.	
HYDROTEST @ 86 PSIG	
VACUUM - 12.5 PSIG @ 75-116 FOR 30 MIN	
RELEASED FOR FABRICATION	
REV.	

TOLERANCES UNLESS OTHERWISE NOTED
0"–8" ± ; 8"–34" ± ; OVER 24" ± ; ANGULAR ± 0°–30'
DECIMALS: .XX ± .010" ; .XXX ± .005" ; MACHINED SURFACES √250

CLEANING & PAINTING

☐ HAND TOOL	SPEC.	
SANDBLAST		
INTERIOR	SPEC.	NOTED NOTE #13
EXTERIOR	SPEC.	
☒ WASH	SPEC.	
☐ OTHER	SPEC.	
☒ PAINTING		
INTERIOR	SPEC.	N/A
EXTERIOR	SPEC.	

px engineering company, inc.
225 MERRIMAC STREET WOBURN, MASSACHUSETTS

FOR ARGONNE NATIONAL LABORATORY
EBR II PROJECT
ANL PO № 1F-39398

TITLE SCMS WATER WASH VESSEL

DRAFTSMAN	PRJ	9/1/82	625
CHECKER	LAE	9/1/82	
Q.C. REVIEW	LM	9/1/82	
PROJ. ENGR.	RFC	9/1/82	SCALE NOTED

E5179-0005-DD 00

SHEET	SYM	ZONE	CHANGE	BY	CHK'D	DATE
2	A-3	C-2	(1) MOVED TO N1, REVISED WELD CONFIG. ADDED JOINT 55 ITEM 31 WAS 8" DIA	PRJ	RFC	9/1/82
1			REVISED PER ARR. NAT. LAB. COMMENTS ADD SPECTACLE FLANGE	LM	RFC	8/26/82

ECO NO. ZONE DESCRIPTION BY
REVISIONS

UNCONTROLLED COPY
VERIFY REVISION WITH
DOCUMENT CONTROL

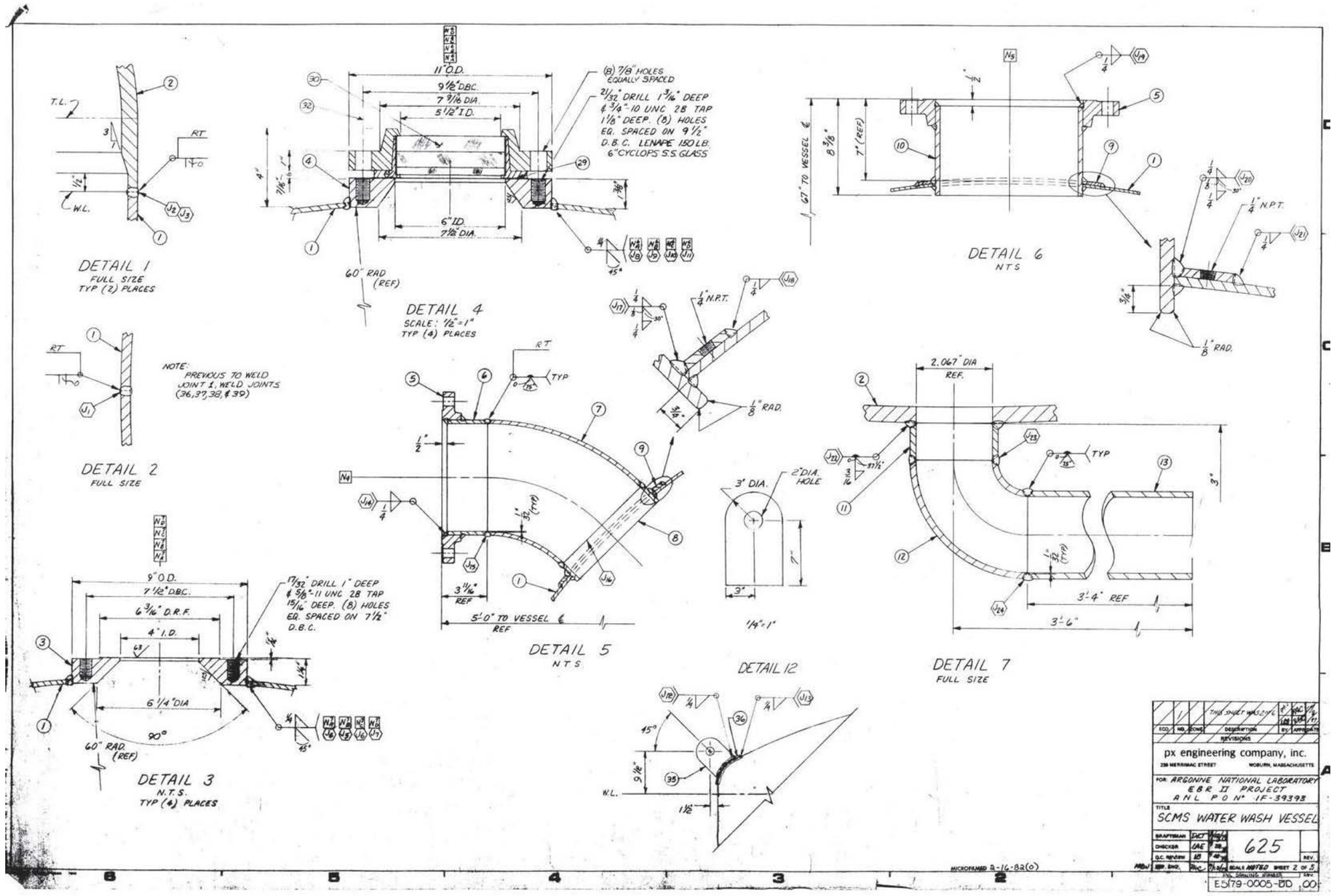
DETAIL 1
FULL SIZE
TYP (2) PLACES
DETAIL 2
FULL SIZE
NOTE:
PREVIOUS TO WELD JOINT 1, WELD JOINTS (36,37,38,& 39)
DETAIL 3
N.T.S.
TYP (4) PLACES
DETAIL 4
SCALE: 1/2"=1"
TYP (4) PLACES
DETAIL 5
N.T.S.
DETAIL 6
N.T.S.
DETAIL 7
FULL SIZE
DETAIL 12
11" O.D.
9 1/2" D.B.C.
7 9/16" DIA.
5 1/2" I.D.
6" I.D.
7 1/2" DIA.
60" RAD (REF)
(8) 7/8" HOLES EQUALLY SPACED
21/32" DRILL 1 3/16" DEEP & 3/4"-10 UNC 2B TAP 1 1/8" DEEP. (8) HOLES EQ. SPACED ON 9 1/2" D.B.C. LENAPE 150 LB. 6" CYCLOPS S.S. GLASS
9" O.D.
7 1/2" D.B.C.
6 3/16" D.R.F.
4" I.D.
6 1/4" DIA
90°
60" RAD. (REF)
17/32" DRILL 1" DEEP & 5/8"-11 UNC 2B TAP 15/16" DEEP. (8) HOLES EQ. SPACED ON 7 1/2" D.B.C.
5'-0" TO VESSEL ℄ REF
3 11/16" REF
1/4" N.P.T.
1/8" RAD.
67" TO VESSEL ℄
8 3/8"
7" (REF)
2.067" DIA REF.
3'-4" REF
3'-6"
3" DIA.
2" DIA. HOLE
1/4"=1"
W.L.
MICROFILMED 2-16-82(0)
px engineering company, inc.
FOR: ARGONNE NATIONAL LABORATORY
EBR II PROJECT
ANL PO N° 1F-39393
TITLE
SCMS WATER WASH VESSEL
625
SCALE NOTED SHEET 2 OF 5
E5179-0005-BD 00

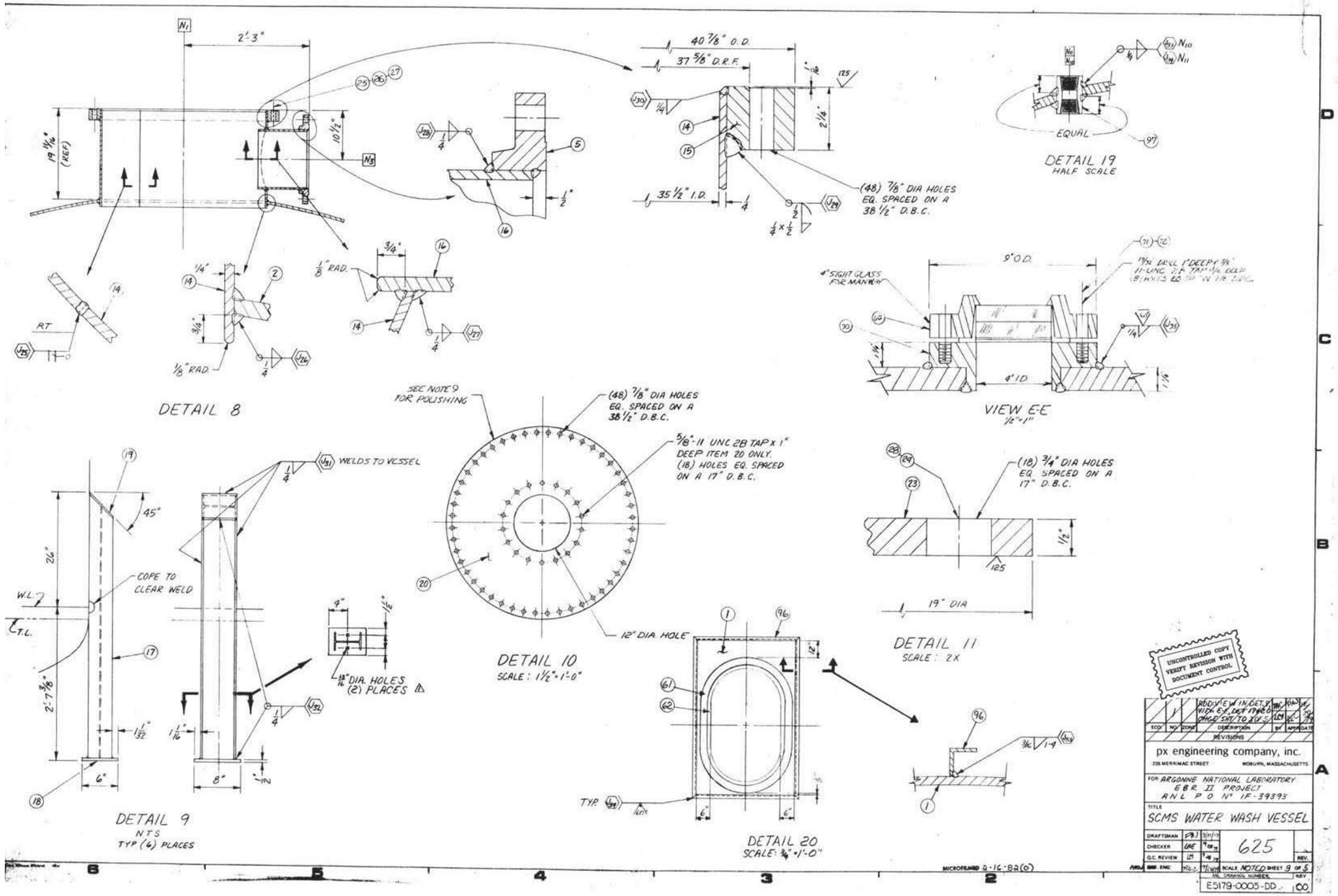
2'-3"
19 11/16" (REF)
10 1/2"
40 7/8" O.D.
37 5/8" D.R.F.
35 1/2" I.D.
(48) 7/8" DIA HOLES EQ. SPACED ON A 38 1/2" D.B.C.
DETAIL 19
HALF SCALE
EQUAL
DETAIL 8
1/8" RAD.
3/4"
4" SIGHT GLASS FOR MANWAY
9" O.D.
4" ID
VIEW E-E
1/2"=1"
SEE NOTE 9 FOR POLISHING
(48) 7/8" DIA HOLES EQ. SPACED ON A 38 1/2" D.B.C.
5/8"-11 UNC 2B TAP x 1" DEEP ITEM 20 ONLY. (18) HOLES EQ. SPACED ON A 17" D.B.C.
12" DIA. HOLE
DETAIL 10
SCALE: 1 1/2"=1'-0"
WELDS TO VESSEL
45°
26"
COPE TO CLEAR WELD
W.L.
T.L.
2'-7 3/8"
6"
8"
DETAIL 9
NTS
TYP (6) PLACES
(18) 3/4" DIA HOLES EQ. SPACED ON A 17" D.B.C.
19" DIA
DETAIL 11
SCALE: 2X
TYP.
DETAIL 20
SCALE: 3/4"=1'-0"
UNCONTROLLED COPY VERIFY REVISION WITH DOCUMENT CONTROL
px engineering company, inc.
725 MERRIMAC STREET WOBURN, MASSACHUSETTS
FOR ARGONNE NATIONAL LABORATORY
EBR II PROJECT
ANL P O N° IF-39393
TITLE
SCMS WATER WASH VESSEL
DRAFTSMAN
CHECKER
Q.C. REVIEW
625
SCALE NOTED SHEET 9 OF 5
ANL DRAWING NUMBER
E5179-0005-DD
00
MICROFILMED 2-16-82(C)

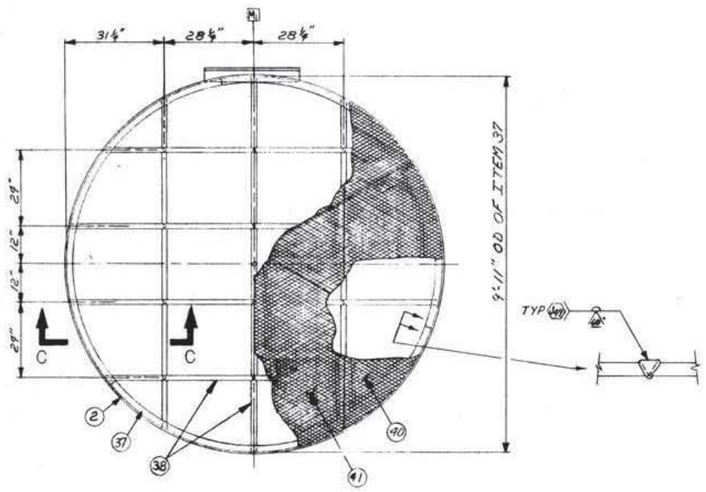

DETAIL 13
NTS

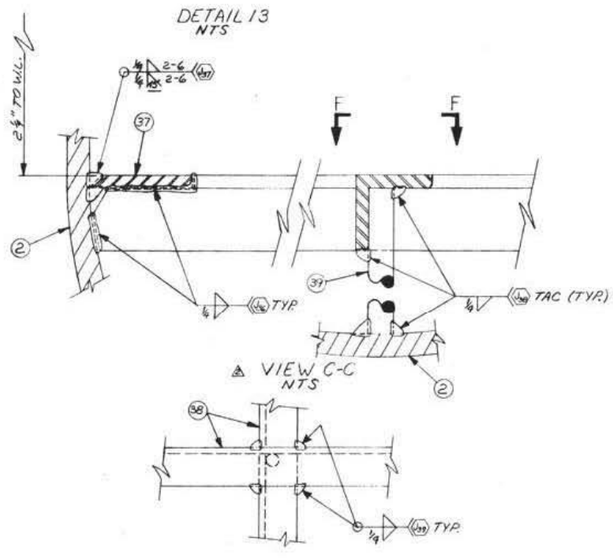

VIEW C-C
NTS

VIEW F-F
NTS

NOTES

1. ALL INTERNAL WELD BEADS IN CONTRACT WITH INTERNAL SURFACES OF THE SHELL OR HEAD MUST BE GROUND TO MATCH THE FINISH OF THE SHELL.
2. PRIOR TO TESTING, THE VESSEL SHALL BE CLEANED OF SCALE, CHIPS, GREASE AND OTHER FOREIGN MATTER.
3. AFTER FABRICATION AND TESTING, THE VESSEL SHALL BE GIVEN A FINAL CLEANING IN PREPARATION FOR SHIPMENT. THE FINAL CLEANING WILL CONSIST OF A DETERGENT WASH OF THE INTERNAL SURFACES AND A CLEAN WATER RINSE. THE VESSEL SHALL BE CLEAN TO THE EXTENT THAT NO CONTAMINATION OF ANY SURFACE IS VISABLE WITHOUT MAGNIFICATION, TO A PERSON WITH NORMAL VISUAL ACUITY, NATURAL OR CORRECTED. AFTER CLEANING, ALL OPENINGS IN THE VESSEL SHALL BE PROVIDED WITH TEMPORARY CLOSURES.
4. HYDROSTATIC TEST: VESSEL @ 86 PSIG IN ACCORDANCE WITH PXE PROC. HTP-625. GLASS IS TO BE IN PLACE DURING HYDRO. ANY DETECTABLE LEAKS SHALL BE REPAIRED IN ACCORDANCE WITH ASME CODE AND RETESTED. RECORDS SUBMITTED AT TIME OF SHIPMENT.
5. VACUUM TEST: AFTER THE HYDROSTATIC TEST VACUUM TEST AT 6 IN. HG (-3 PSIG) THE VACUUM SHALL BE MAINTAINED FOR AT LEAST 30 MIN. WITH NO DETECTABLE CHANGE IN PRESSURE. A TEST REPORT WILL BE MAINTAINED & SUBMITTED AT FINAL SHIPMENT.
6. BLAST EXTERIOR CARBON STEEL SURFACES PER SSPC-SD-6. COAT WITH SHOP PRIMER.
7. PREPARATION FOR SHIPMENT: THE VESSEL SHALL BE ADEQUATELY PACKAGED AND SUPPORTED TO PRECLUDE DAMAGE DURING LOADING, SHIPING AND OFF LOADING. ALL VESSEL OPENINGS SHALL BE SEALED TO PRECLUDE CONTAMINATION OF THE VESSEL INTERIOR DURING SHIPMENT. ALL GASKET SURFACES ON VESSEL FLANGES SHALL BE PROTECTED FROM DAMAGE. ALL VIEWING WINDOWS SHALL BE REMOVED FROM VESSEL AND PACKED SEPARATLY FOR SHIPMENT. METHODS OF PACKAGING AND SUPPORTING THE VESSEL SHALL BE AGREED TO BY PX ENG. AND THE LABORATORY PRIOR TO SHIPMENT. GRATING TO BE SHIPPED LOOSE
8. HEAD SEAMS TO BE 100% RADIOGRAPHED, POLISHED AND CODE STAMPED U-2 BY HEAD MANUFACTURERS. PARTIAL DATA REPORT TO BE INCLUDED IN FINAL DOC. PACKAGE.
9. INSIDE SURFACE OF DOOR & TOP COVER ITEMS (20 & 67) TO BE FINISHED TO A 28 OR A SURFACE FRENCH BRIGHT FINISH.
10. LONGITUDINAL WELDS IN SHELL ARE TO BE 100% RADIOGRAPHED.
11. SIGHT GLASS IS TO HAVE TEFLON COATING AND ABLE TO WITHSTAND NaOH ENVIROMENT.

BILL OF MATERIAL

NOTE REF.	HEAT NO.	ITEM	QTY.	DESCRIPTION	MATERIAL
NA		37	3	12" X 3/8" X 3/8" THK. FLAT BAR (ROLL HARDWARE TO 9'-11 3/8" OUTSIDE RADIUS)	COMM 304 T-304
		38	1	6 1/2" X 1 1/2" X 1/2" THK. 69'-5" LONG (CUT PER. DETAIL 13)	COMM 3/8
		39	1	3/4" DIA. ROUND BAR 20' LONG (CUT PER DETAIL 13)	COMM 3/8
		40	2	10' LG X 2'-7" X 3/4" THK BUSTIN PROTECO GRATING TYP #6 (CUT TO SUIT DET. 13)	T-304 3/8
		41	2	10' LG X 2'-4 1/4" X 3/4" THK. BUSTIN PROTECO GRATING TYP #6 (CUT TO SUIT DET. 13)	T-304 3/8
		42-56	0	42 THRU 56 DELETED	
		57	12	1 1/4" DIA (O.D.) CROSS SECT. O RING X .864" I.D. - 90 DUR (12 SHARES) PARKER #8-080	NEOPRENE
		58-60	0	58 THRU 60 DELETED	
		61	1	40" X 40" X 3/4" THK. PL (CUT & MACH. PER DET. 14)	SA 240 T-304
		62	1	75" X 12" X 1 1/2" THK. PL (CUT & ROLL PER DET. 14)	SA 240 T-304
		63	1	35" X 53" X 1 1/2" THK. PL (CUT & MACH. PER DET. 14)	SA 240 T-304
		64	2	1/2" DIA STEEL HINGE PIN X 2" LG. W/ WASHER AND COTTER PIN	COMM 18-8
		65	4	7" X 12" X 3/4" THK. PL (SEE DETAIL #7)	SA 240 T-304
		66	2	4" X 9" X 3/4" THK. PL (SEE DETAIL #7)	SA 240 T-304
		67-68	0	67 AND 68 DELETED	
		69	1	4" CYCLOPS TYPE "F" SIGHT GLASS ASS'Y WITH 6 3/16" S.F. TEFLON COATED	SA-515-70 & T-316 3/8
		70	1	2 1/2" THK. X 9 3/4" DIA PL (MACH PER VIEW F-F)	SA 240 T-304
		71	8	5/8"-11-UNC X 2" LG. BOLT	SA 193 GR B-7
		72	1	6 3/4" O.D. X 4" I.D. X 1/8" COMP. ASBESTOS GASKET	COMM
		73	1	4" CYCLOPS SPARE GLASS INSERT TYPE "F" (WITH 6 3/16" S.F.) FOR ITEM #69	TEFLON COAT. & T-316 3/8
		74	0	74 DELETED	
		75	4	4"-150# BLIND R.F. FLANGES FOR HYDROTEST.	SA-105
		76	4	6 3/4" DIA X 1/8" RUBBER GASKET	COMM
		77	3	12"-150# R.F. BLIND FLANGES FOR HYDROTEST	SA-105
		78	3	15" DIA X 1/8" THK. RUBBER GASKET	COMM
		79	1	2" SCH. 40 THAXTON STOPPER	COMM
		80		WOOD SKIDS	
		81		3/4" PLYWOOD FLANGE COVERS	
		82		STEEL BLANKS FOR SIGHT WINDOWS	
		83	1	60" SPOOL 3/8" DIA WELD FILLER METAL	SFA 5.9/ER-308
		84	10#	3/32" DIA FLUX-SFA 5.9 (LINCOLN ST-100, HOBART HS 300, ARCOSITE S-4)	SFA - 5.9
		85	20#	3/8" DIA MILD STEEL ELECTRODES	SA-5.1/E6013
		86	25#	1/8" DIA STAINLESS STEEL COVER ELECTRODE	SFA 5.4/E-308-16
		87	10#	1/8" DIA WELD FILLER METAL	SFA 5.9/ER-308
		88	40#	1/8" DIA S/S COVERED ELECTRODE	SFA-5.4/308-16
		89	6	1 1/2" DIA X 10' LG. X 3/16" THK WALL TUBE (MACH PER DET. 14)	SA 213 T-304
		90	6	1 1/2" DIA X 12" LG. ROUND BAR (MACH PER DET. 14)	SA 479 T-304
		91	12	3/4" X 1 1/2" X 14" LG. FLAT BAR BOND PER VIEW D-D	SA 479 T-304
		92	6	BOSTON GEAR FLG. BEARING, CAT #FB 1420-8	BRONZE
		93	12	7/8"-9 UNC HEAVY HEX NUTS	SA 194 GR 8M
		94	6	1/4" THK X 1 3/4" X 2 1/2" FLAT BAR	SA 240 T-304
		95	12	1/8" THK X 1 3/4" OD TO 1 1/2" ID RUBBER GASKET	BUNA "N" 50 DUR
		96	1	6 1/2" X 1 1/2" X 3/8" THK. 19'-0" LONG (CUT PER. DETAIL 20)	SA-36
		97	2	3/4"-3000# FULL THRD COUPLING	SA-182 T-304
		98	6	3/8" X 1 1/2" X 5 1/2" LG FLAT BAR (CUT TO SUIT)	SA 479 T-304
NA		99	6	3/16" X 3/4" X 1" BAR	SA 479 T-304

UNCONTROLLED COPY
VERIFY REVISION WITH
DOCUMENT CONTROL

REV.	DATE	BY	DESCRIPTION
3	8-2		ITEM 38 WAS 3/8" X 1 1/2" BAR; ADD ITEM 99
2			ADD VIEW F-F & NOTES 10 & 11; CHANGE: DETAIL 13, NOTES #47, LTR #75 37-41, 89, 8 & 96
1			DELETED ITEMS 58-60 & 94

REVISIONS

px engineering company, inc.
225 MERRIMAC STREET WOBURN, MASSACHUSETTS

FOR: ARGONNE NATIONAL LABORATORY
EBR II PROJECT
ANL PO NO. 12-88393

TITLE: SCMS WATER WASH VESSEL

DRAFTSMAN	CB	8/16/82	625
CHECKER	UAC	8/18/82	
Q.C. REVIEW	LH	8/18/82	
PROJ. ENG.	R.L.A.	7/26/82	SCALE NOTED SHEET 1 OF 1

ANL DRAWING NUMBER: E5179-0005-DD .00

CODE
SYMBOL STAMP
OPER. PRESS. TEMP.
DESIGN PRESS. TEMP.
MAWP TEMP.
VACUUM
WEIGHT EMPTY
WEIGHT FULL

RELEASED FOR FABRICATION

REV.	

TOLERANCES UNLESS OTHERWISE NOTED
0" – 8" ± 1/8
8" – 24" ± 1/4
OVER 24" ± 1/4
ANGULAR ± 0° – 30'
DECIMALS: .xx ± .010" .xxx ± .005"
MACHINED SURFACES √250

CLEANING & PAINTING
☐ HAND TOOL SPEC.
SANDBLAST
INTERIOR SPEC.
EXTERIOR SPEC.
☐ WASH SPEC.
☐ OTHER SPEC.
☐ PAINTING
INTERIOR SPEC.
EXTERIOR SPEC.

JOINT NO.	SPEC. NO.	PROCESS	JOINT NO.	SPEC. NO.	PROCESS
NDE DATA			WELDING DATA		

MICROFILMED 8-16-82(0)

6 5 4 3 2

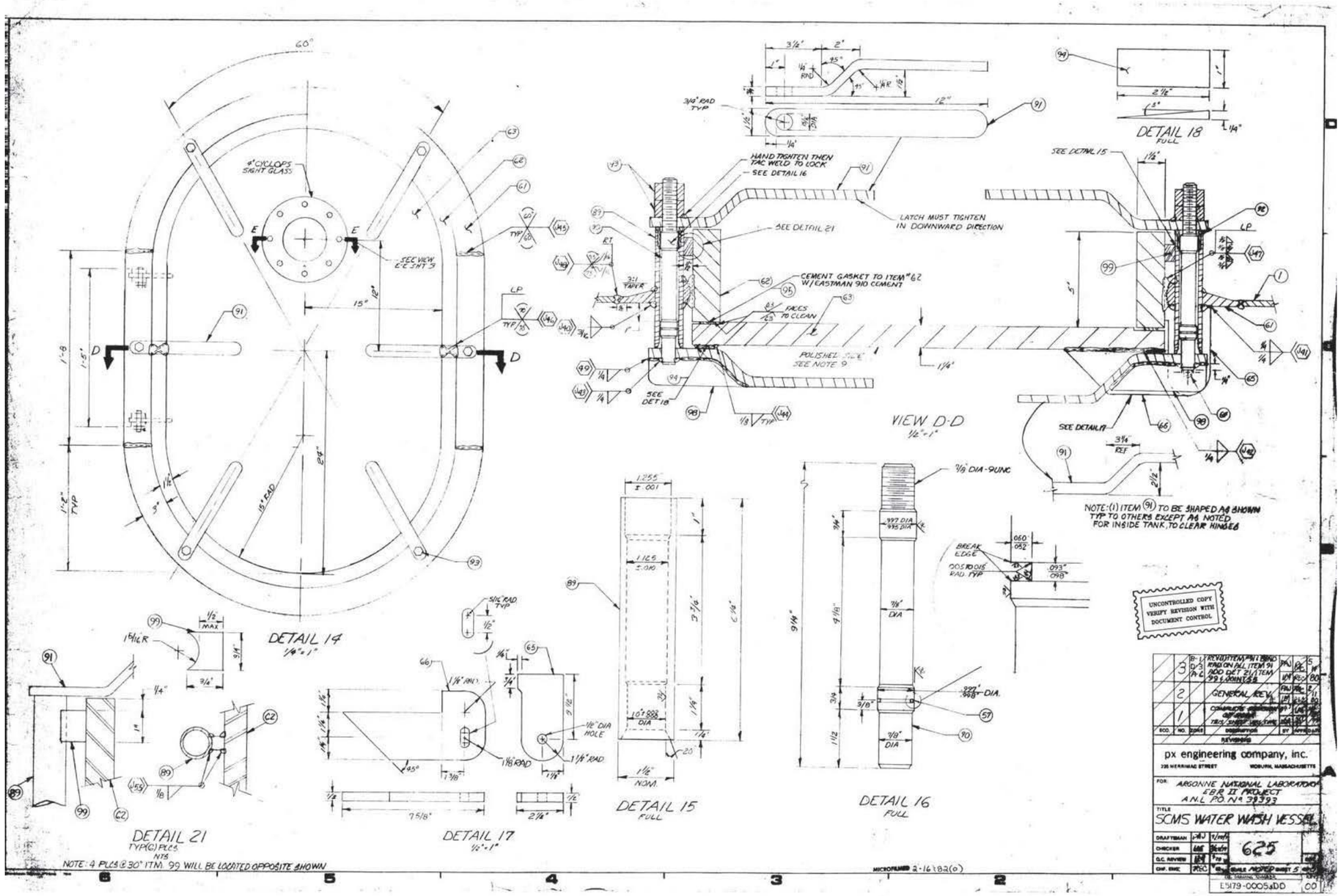
4" CYCLOPS SIGHT GLASS
SEE VIEW E-E SHT 3
DETAIL 14
1/4" = 1"
HAND TIGHTEN THEN TAC WELD TO LOCK
SEE DETAIL 16
SEE DETAIL 21
LATCH MUST TIGHTEN IN DOWNWARD DIRECTION
CEMENT GASKET TO ITEM 62 W/ EASTMAN 910 CEMENT
FACES TO CLEAN
POLISHED FACE SEE NOTE 9
SEE DET 18
VIEW D-D
1/2" = 1"
DETAIL 18
FULL
SEE DETAIL 15
SEE DETAIL 17
NOTE: (1) ITEM (91) TO BE SHAPED AS SHOWN TYP TO OTHERS EXCEPT AS NOTED FOR INSIDE TANK, TO CLEAR HINGES
UNCONTROLLED COPY VERIFY REVISION WITH DOCUMENT CONTROL
DETAIL 21
TYP (C) PLCS
NTS
NOTE: 4 PLCS @ 30° ITM. 99 WILL BE LOCATED OPPOSITE SHOWN
DETAIL 17
1/2" = 1"
DETAIL 15
FULL
DETAIL 16
FULL
px engineering company, inc.
ARGONNE NATIONAL LABORATORY
EBR II PROJECT
ANL PO No 39393
SCMS WATER WASH VESSEL
625
E5179-00054DD
00

Attachment D-12

Drawing of SCMS Water Wash Vessel Burn Pan (Example)

Top View

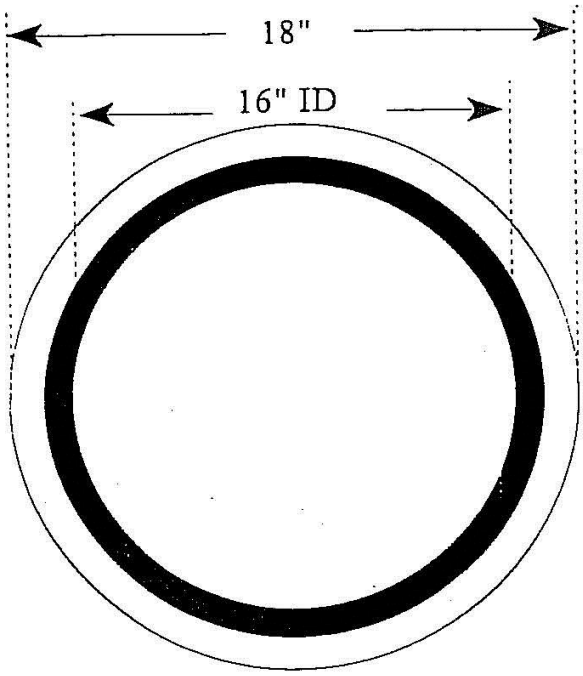

Front Sectional View

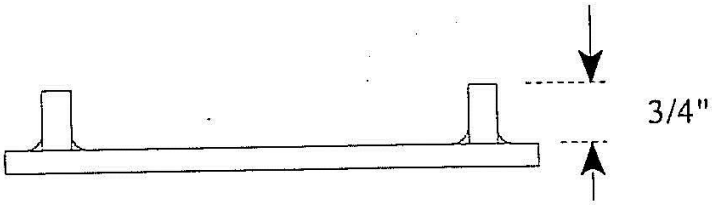

Burn Pan

Notes:

- The burn pan bottom plate is 3/8" ASTM A36 carbon steel.
- The burn pan cylinder is rolled 3/8" ASTM A36 carbon steel, welded on the inner and outer surfaces to the bottom plate.

Attachment D-13

Drawing Showing Treatment of Debris and Container Residuals in SCMS Water Wash Vessel (Example)

003U

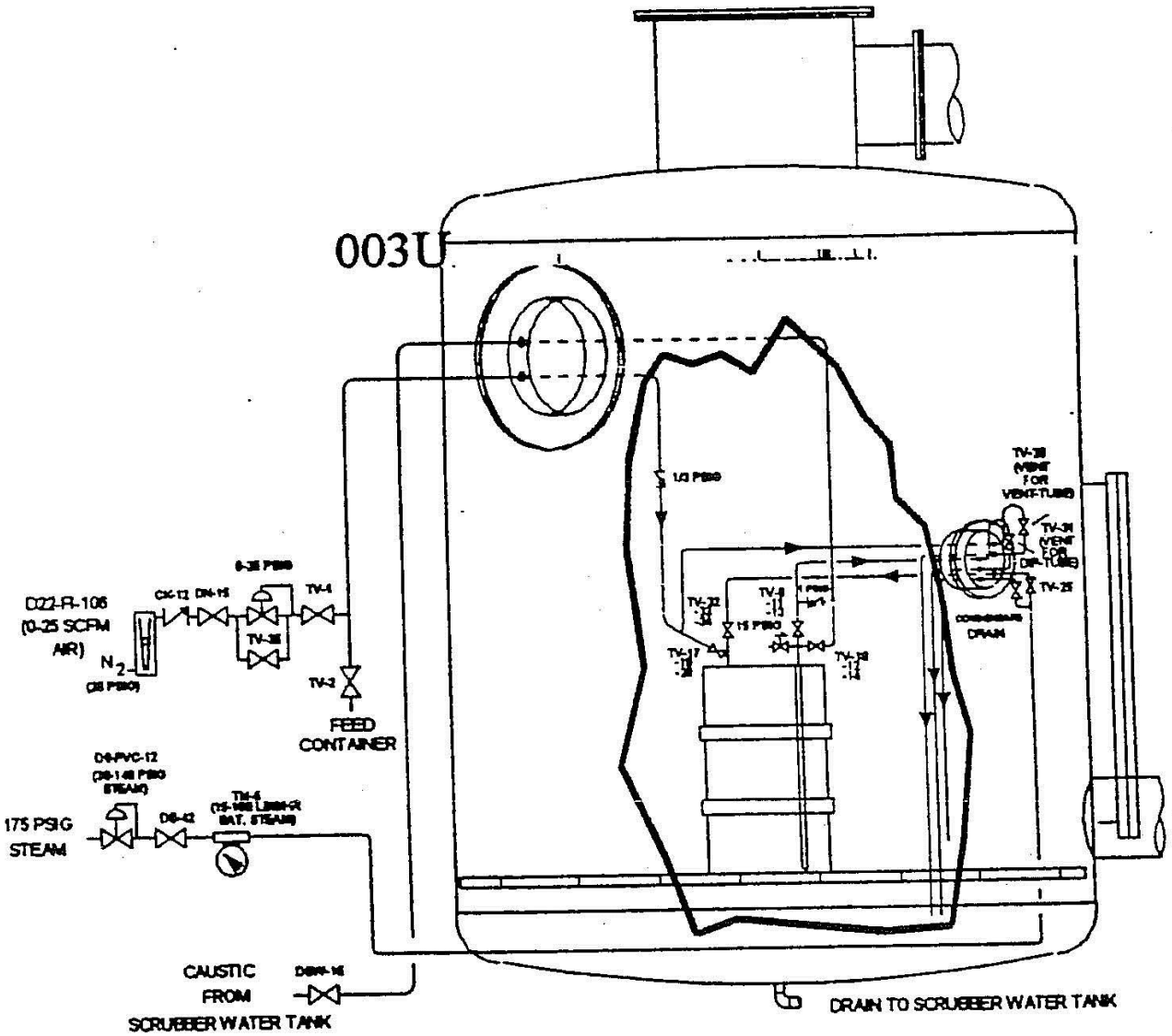
D22-FI-106
(0-25 SCFM
AIR)
N_2
TV-4
TV-2
FEED
CONTAINER
175 PSIG
STEAM
CAUSTIC
FROM
SCRUBBER WATER TANK
DRAIN
DRAIN TO SCRUBBER WATER TANK

Attachment D-14

Drawing of SCMS Venturi Scrubber General Arrangement (Example)

378107D1 (Sheet 1 of 1)

DWG NO 378107D1	REV 0	SHT ~

REVISIONS

DCN Nº	ZONE	LTR	DESCRIPTION	BY	DATE	APP'D

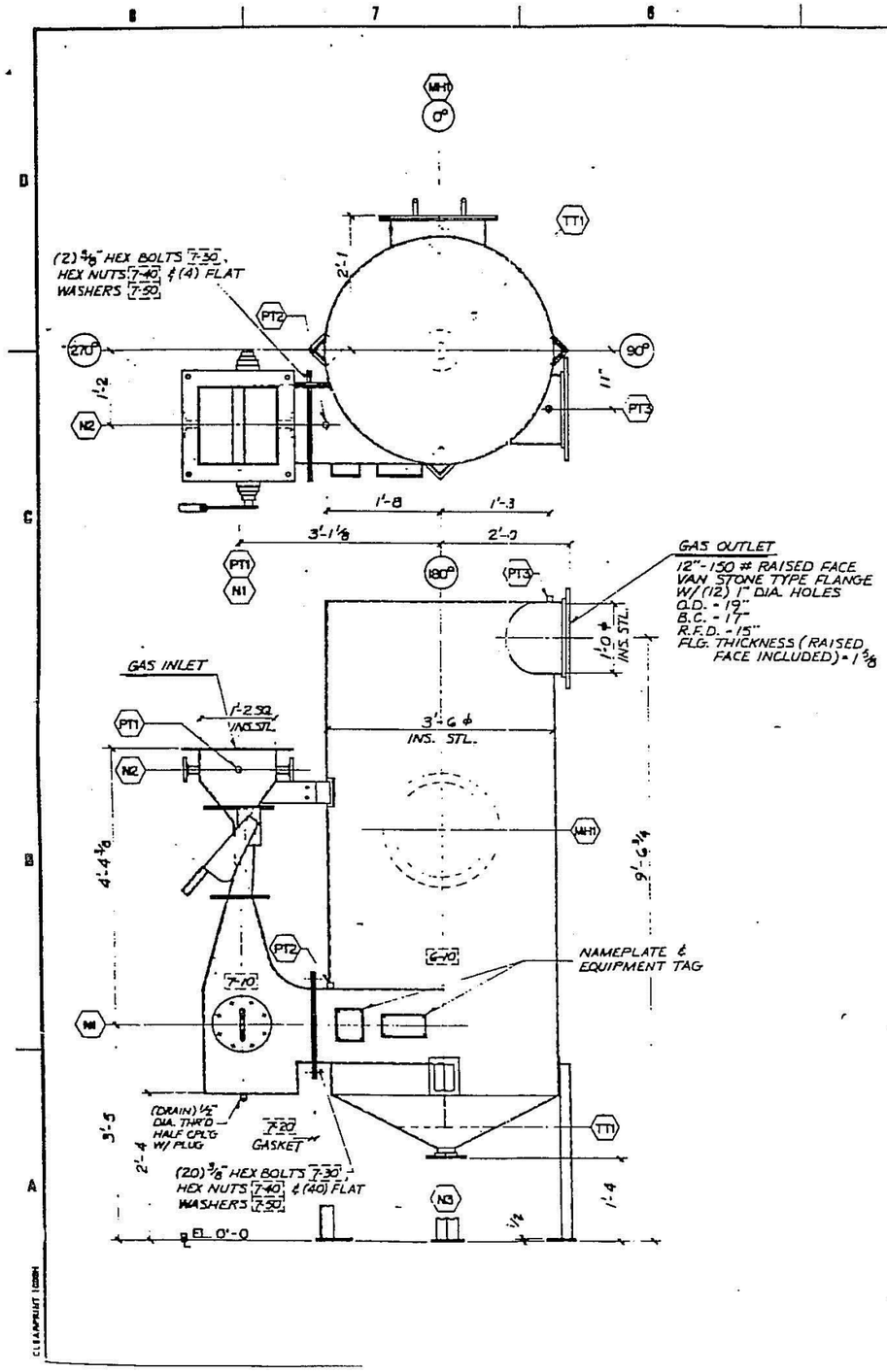

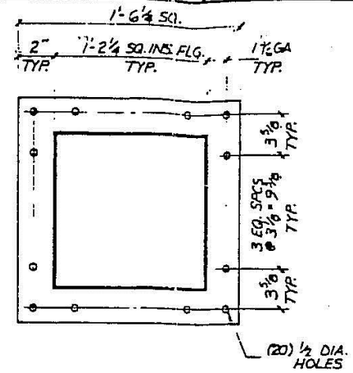

GAS INLET

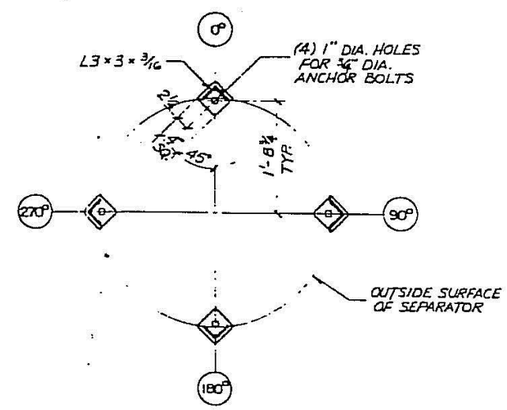

MOUNTING PLAN

GENERAL NOTES:

1. MATERIAL: 10 GA. 304L STAINLESS STEEL UNLESS OTHERWISE NOTED.
   FLANGES - 1/2" 304L STAINLESS STEEL
   SUPPORT LEGS - MILD STEEL WITH 304L STAINLESS STEEL BACK-UP PLATE
   PIPING - 304 STAINLESS STEEL WITH 150 LB. MILD STEEL VAN STONE TYPE FLANGE UNLESS OTHERWISE NOTED.
   GASKETS - 1/8" FULL FACED NEOPRENE 30-40 DUROMETER UNLESS OTHERWISE NOTED.
2. ALL WELDING TO CONFORM TO THE STRUCTURAL WELDING CODE - AWS D1.1 OF THE AMERICAN WELDING SOCIETY.
3. ALL BOLTS, NUTS AND GASKETS NECESSARY FOR ASSEMBLY OF UNIT ARE PROVIDED. BOLTS, NUTS AND GASKETS FOR CONNECTION TO OTHER EQUIPMENT ARE NOT PROVIDED.
4. UNIT DESIGNED TO WITHSTAND AN OPERATING PRESSURE OF -60" W.G. @ 150°F.
5. SUPPORT LEGS DESIGNED TO WITHSTAND WEIGHT OF UNIT FILLED WITH WATER TO BOTTOM OF FLOODED ELBOW. HORIZONTAL OR VERTICAL LOADS IMPOSED BY OTHER EQUIPMENT ARE NOT SUPPORTED. WIND LOADS ARE SUPPORTED.
6. ALL EXTERIOR MILD STEEL SURFACES TO RECEIVE ONE (1) SHOP PRIME COAT PROFCOAT P-50 OR EQUAL WITH SURFACE PREPARATION TO BE IN ACCORDANCE WITH SSPC-PC3 BRUSH BLAST.
7. INDICATES SHIPPING NUMBERS "[ ]"

WEIGHT:

1,600 LBS. SHIPPING
2,500 LBS. OPERATING

ITEM	QTY	SIZE	DESCRIPTION	LENGTH	WIDTH	RATING	FACING	TYPE	ZONE
TT1	1	1/2"	TEMPERATURE TAP	~	~	2000-3000 #	F.N.P.T.	HALF COUP'G	45°
PT3	1	1/2"	PRESSURE TAP	~	~	2000-3000 #	F.N.P.T.	HALF COUP'G	~
PT2	1	1/2"	PRESSURE TAP	~	~	2000-3000 #	F.N.P.T.	HALF COUP'G	~
PT1	1	1/2"	PRESSURE TAP	7-5 1/8	~	2000-3000 #	F.N.P.T.	HALF COUP'G	~
N3	1	2"	DRAIN	~	~	150 #	RAISED	VAN STONE	~
N2	2	1"	LIQUID INLET	7-5 1/8	10"	150 #	RAISED	VAN STONE	~
N1	1	6"	[illegible] INSFL[illegible]	3'-6	~	~	~	~	~
MH1	1	18"	[illegible]	6'-6	~	~	~	~	0°

ARGONNE NATIONAL LABORATORY
IDAHO FALLS, IDAHO
P.O. Nº IF-39463

M.O. Nº 378107-075

ENVIRONMENTAL ELEMENTS CORPORATION

DRAWN [illegible] 56

GENERAL ARRANGEMENT ENELCO VENTURI SCRUBBER MODEL 1503SS

SIZE	FSCM NO.	DRAWING NO.	REV
D		378107D1	0

Attachment D-15

Drawing of SCMS Moisture Separator

EBR-II SCMS Water Wash Installation Moisture Separator (Example)

692265 (Sheet 14 of 26) (Alternate Id: E5179-0003-DD)

DWG. NO. E5179-0003-DD-05

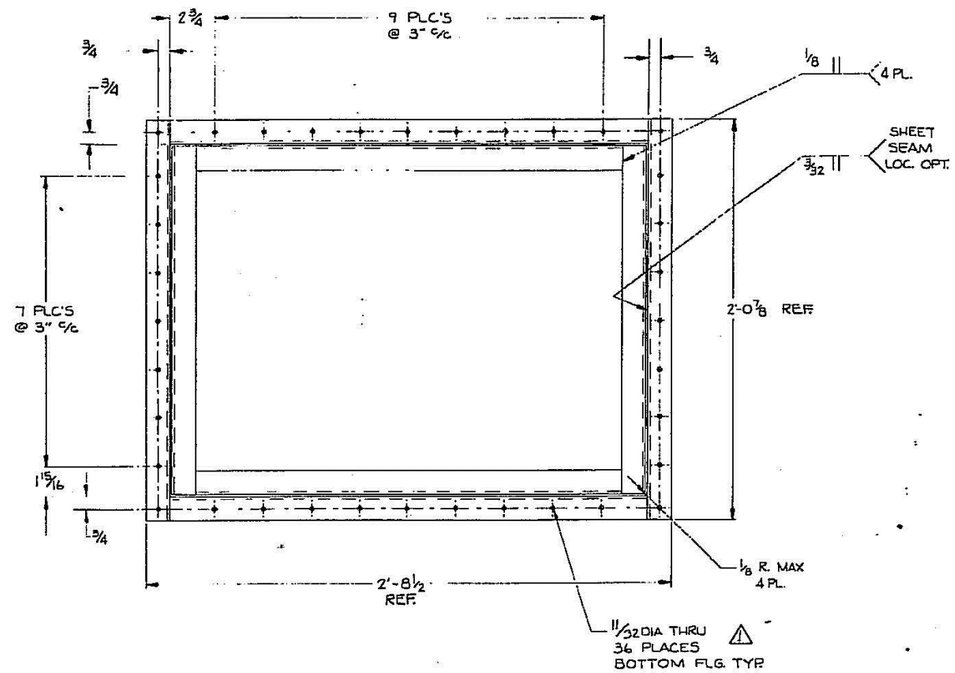

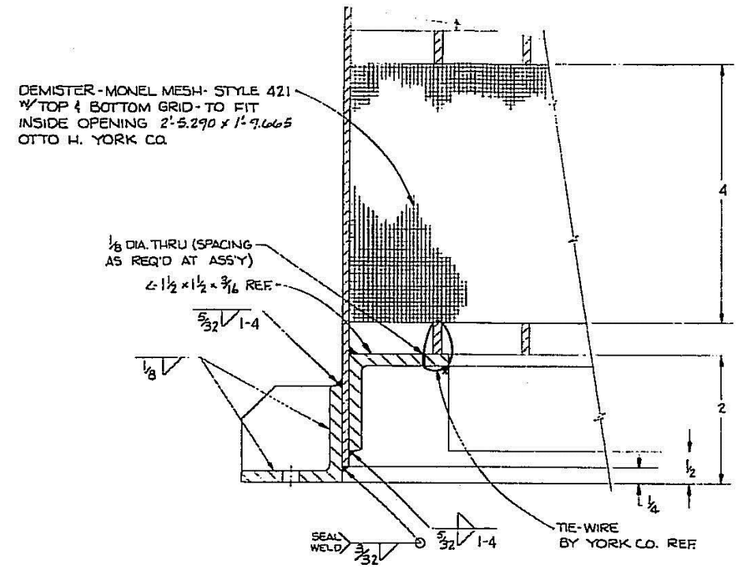

DETAIL 37/14|14
SCALE: —— FULL

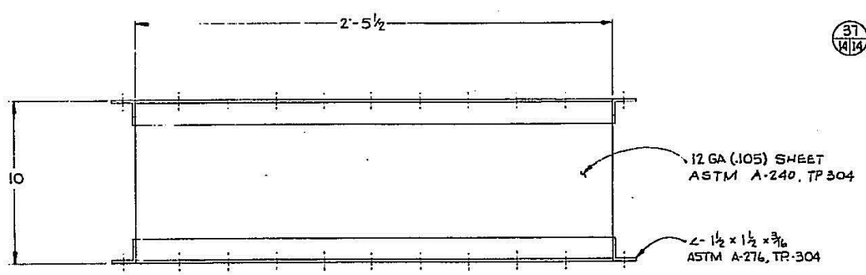

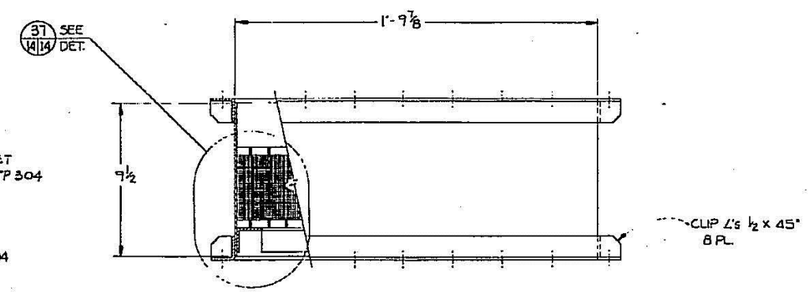

DETAIL 12/3|14
SCALE: —— 1/4" = 1"

UNCONTROLLED COPY VERIFY REVISION WITH DOCUMENT CONTROL

SEE SHEET 1 FOR GENERAL NOTES

SUBMITTED BY: 1-3-75 (4)	SYM	ZONE	SEE SHT 1 CHANGES	BY	CHK'D	DATE	

UNLESS OTHERWISE NOTED
ALL DIMENSIONS ARE INCHES
FRACTIONAL TOL. ± 1/16
DECIMAL TOL. ± .005
ANGULAR TOL. ± 1/2°
REMOVE ALL BURRS AND SHARP EDGES
SURFACES TO BE IN ACCORDANCE WITH ANSI B46.1 - 1962
DIMENSIONS & TOLERANCES IN ACCORDANCE WITH ANSI Y14.5.
1973

DRAWN BY B. MILLER	DATE 4-79	DR. LEADER MOCHBERGER	DATE 7-79
CHECKED Jwbright	8/21/79	PROJ/EST MGR.	
APP. CHIEFS	11/1/	APP'D/RELEASED	11/21/79
MATERIAL NOTED			

THIS DRAWING IS THE PROPERTY OF ARGONNE NATIONAL LABORATORY

TITLE
EBR II - SCMS
WATER WASH INSTALLATION
MOISTURE SEPARATOR

SCALE	SHEET	DRAWING NUMBER	REV
1/4	14 of 24	E5179-0003-DD	05

SR# 64878

ANL 284A (11-77)

Attachment D-16

Drawings of SCMS Process Ventilation System (Examples)

Process Ventilation System, SCMS Facility No. 793, Plans and Sectors

748529 (Sheet 1-2 of 4) (Alternate Id: W7930-0201-DD)

EBR-II SCMS Water Wash Installation Plan @ El. 148’-0”

692265 (Sheet 2 of 26) (Alternate Id: E5179-0003-DD)

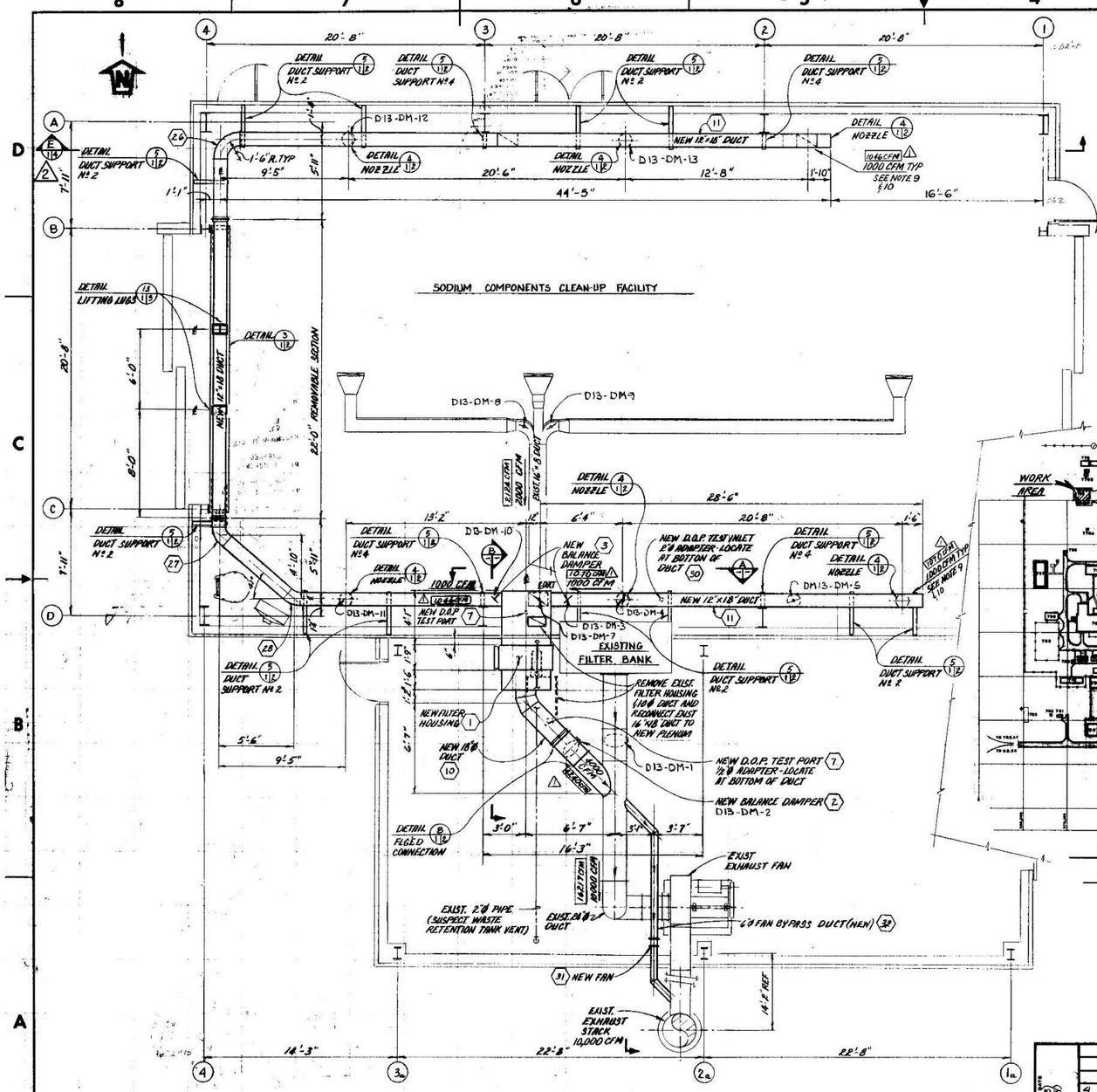

PLAN
SCALE: 1/4"=1'-0"

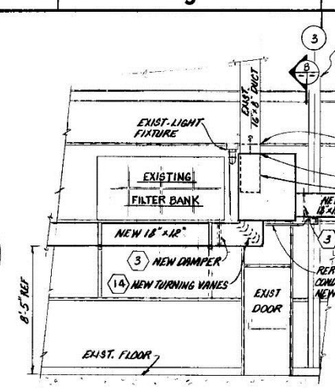

ELEVATION
SCALE: 1/4"=1'-0"

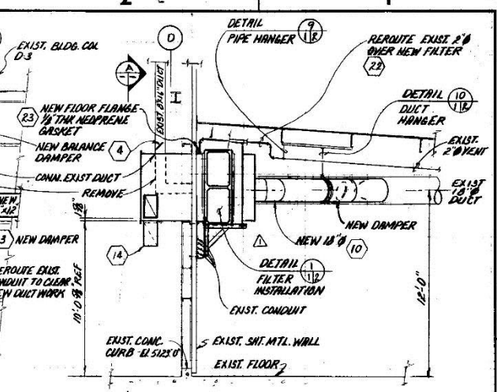

SECTION
SCALE: 1/4"=1'-0"

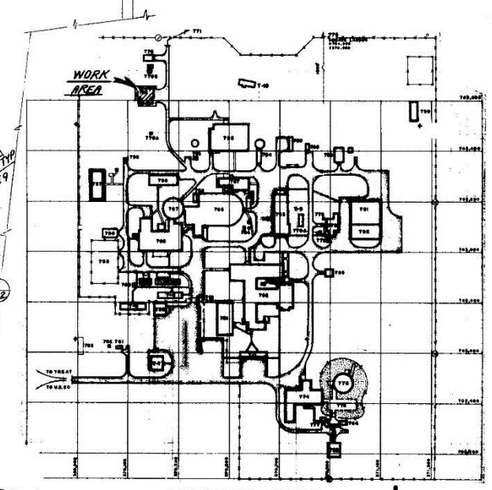

ARGONNE WEST
—SITE PLAN—

GENERAL NOTES

1. SECTION AND DETAILS INDICATED ON THIS DRAWING ARE IDENTIFIED AS SHOWN
   LETTER DENOTES SECTION — NUMBER DENOTES DETAILS
   SHEET WHERE CUT — SHEET WHERE SHOWN
2. MAKE AND MODEL NUMBERS ARE SHOWN TO INDICATE THOSE ON WHICH THE DESIGN IS BASED, NOT TO ELIMINATE APPROVED EQUIVALENTS
3. NUMBERS INCLUDED IN A HEXAGON ⬡ INDICATES PARTS CALLED IN THE PARTS LIST, SEE DRAWING Nº W7930-0201-PL
4. EXCEPT AS NOTED TRANSVERSE JOINTS TO BE HEMMED 'S' SLIP / DRIVE SLIP AND SEALED ALL AROUND WITH SOLDER OR APPROVED EQUIVALENT.
5. FLAT AREAS OF DUCT OVER 18 INCHES WIDE SHALL BE STIFFENED BY CROSS BREAKING
6. PLENUM SIZE TO BE VERIFIED WITH FILTER HOUSING FOR PROPER FIT UP.
7. SHOP PRIME ALL DUCT SUPPORTS AND CARBON STEEL FRAMES AND FINISH PAINT TO MATCH EXISTING STRUCTURE
8. ALL WELDING TO BE INACCORDANCE WITH AWS D-111
9. DESIGN AIR FLOW AT EACH NOZZLE IS 1000 CFM IE NO OTHER NOZZLE IN DUCT RUN HAS AIR FLOWING. IF MORE THAN ONE NOZZLE IS OPEN THEN THE AIR FLOW (AT EACH NOZZLE) IS SUBSEQUENTLY REDUCED.
10. VOLUMES INDICATED THUS ▭ ARE FLOWS MEASURED 2/28/76

UNCONTROLLED COPY - VERIFY REVISION WITH DOCUMENT CONTROL

SYM	ZONE	CHANGE	BY	CHK'D	DATE
4	1/4	DCN W7930-079 (ECA-5589)	JD		7/1/96
3		PER DCN W7930-071	G.H	JDL	7/1/96
2		PER DCN 7930-047			11-27-75
1		REVISED PER DCN 7930-020			1-22-75

DRAWING CONSISTING OF 4 SHEETS

APPR'D L.G. WITTECK	DATE 8/11/75	APPR'D R.A. WASHBURN	DATE 8/13/75
J.W. AUER	8/11/75	C.M. HETTRICK	8/13/75
J.D. LEMAN	8/13/75		
DRAWN BY R.G. DALTON	DATE 5/14/75	SERVICE REQUEST 80975/63988	
CHECKED J. LEWIS	6/11/75	PROJECT MGR. J.D. LEMAN	
RESP. ENGINEER H. SWARGEN	6/11/75	APPR'D/RELEASED	DATE 6-16-75

REF. NO. | NEXT ASSEMBLY | SHEET 0

THIS DRAWING IS THE PROPERTY OF
ARGONNE NATIONAL LABORATORY

TITLE
PROCESS VENTILATION SYSTEM
SCMS FACILITY Nº 793
PLANS AND SECTIONS

ARGONNE WEST — INEL
SHEET 1 of 4 — DRAWING NUMBER W7930-0201-DD-04 — REV.

DWG. NO.

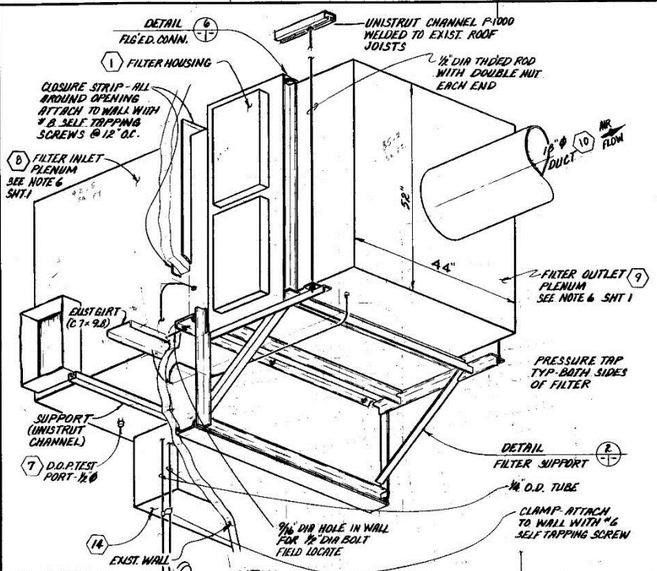

NEW FILTER INSTALLATION DETAIL 1/1 2

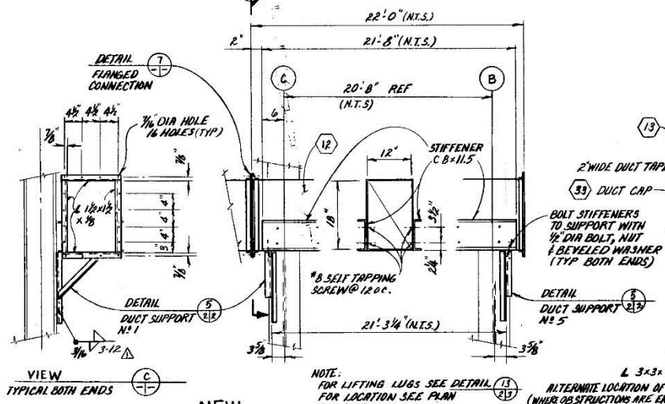

NEW REMOVABLE DUCT SECTION DETAIL 3 2/1
SCALE: 3/4" = 1'-0"

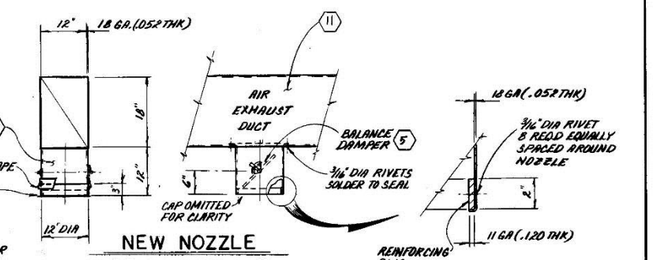

NEW NOZZLE DETAIL 4 1/2
SCALE: 3/4" = 1'-0"
6 REQD

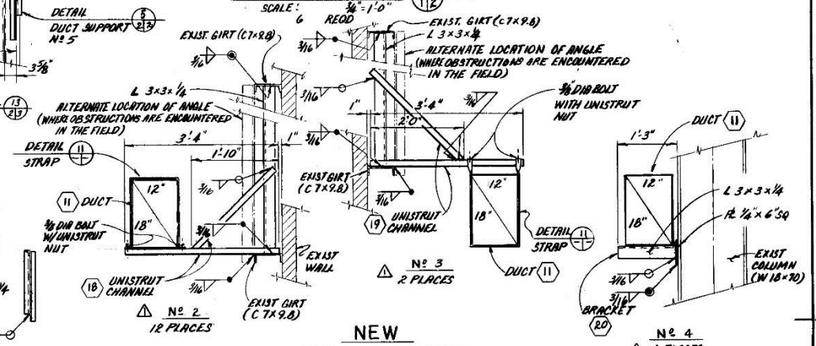

NEW DUCT SUPPORT DETAIL 5 1/2 2
SCALE: 3/4" = 1'-0"

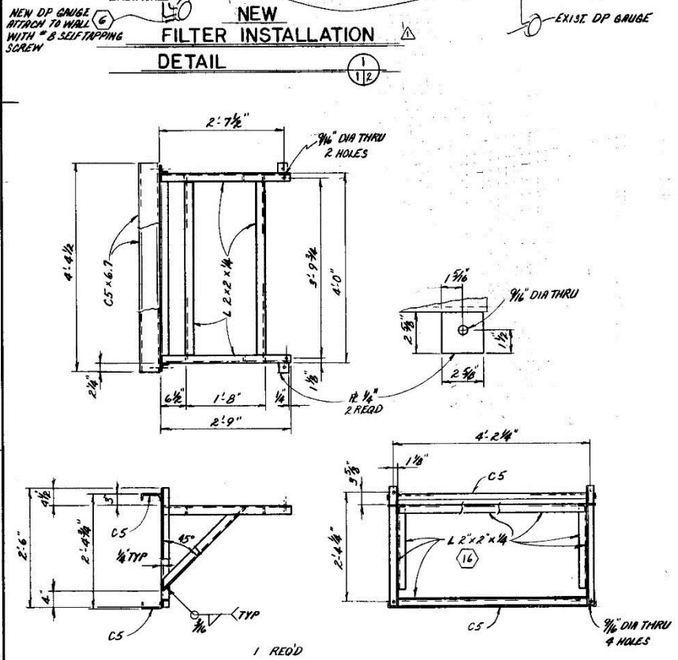

NEW FILTER SUPPORT DETAIL 2 1/1
SCALE: 3/4" = 1'-0"

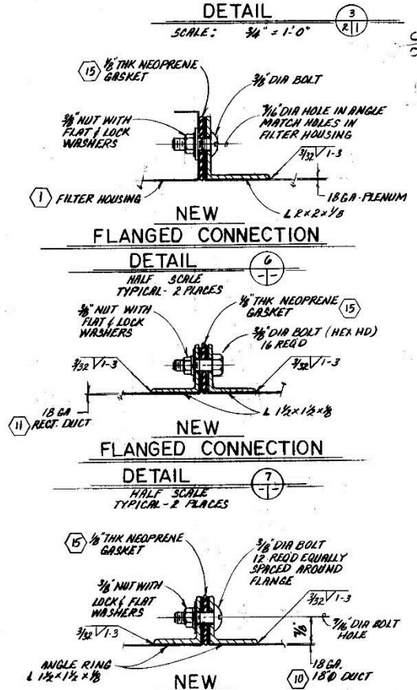

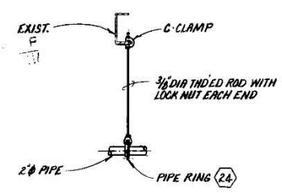

NEW PIPE HANGER DETAIL 9 1/2
SCALE: 3/4" = 1'-0"
1 REQD

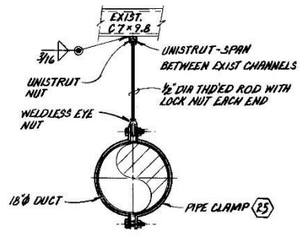

NEW DUCT HANGER DETAIL 10 1/2
SCALE: 3/4" = 1'-0"
1 REQD

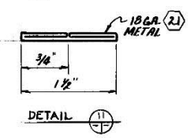

UNCONTROLLED COPY - VERIFY REVISION WITH DOCUMENT CONTROL

REF. NO.	NEXT ASSEMBLY	REQ'D

THIS DRAWING IS THE PROPERTY OF ARGONNE NATIONAL LABORATORY

TITLE: PROCESS VENTILATION SYSTEM
SCMS/ FACILITY Nº 793
MISC. DETAILS

DRAWN BY DALTON	DATE 6/16/75	SERVICE REQUEST 80973/63988	
CHECKED J. LEWIS	6/24/75	PROJECT MGR. J. D. LEMAN	—
RESP. ENGINEER HSWanson	8/4/75	APPR. D/RELEASED RP Naum	8/19/75
		DATE 6-16-75	

ARGONNE WEST — SHEET 2 of 4 — DRAWING NUMBER W7930-0201-DD-04 — REV. — INEL

REV.	SYM	ZONE	CHANGE	BY	CHK'D	DATE

ANL-384A (8-72)

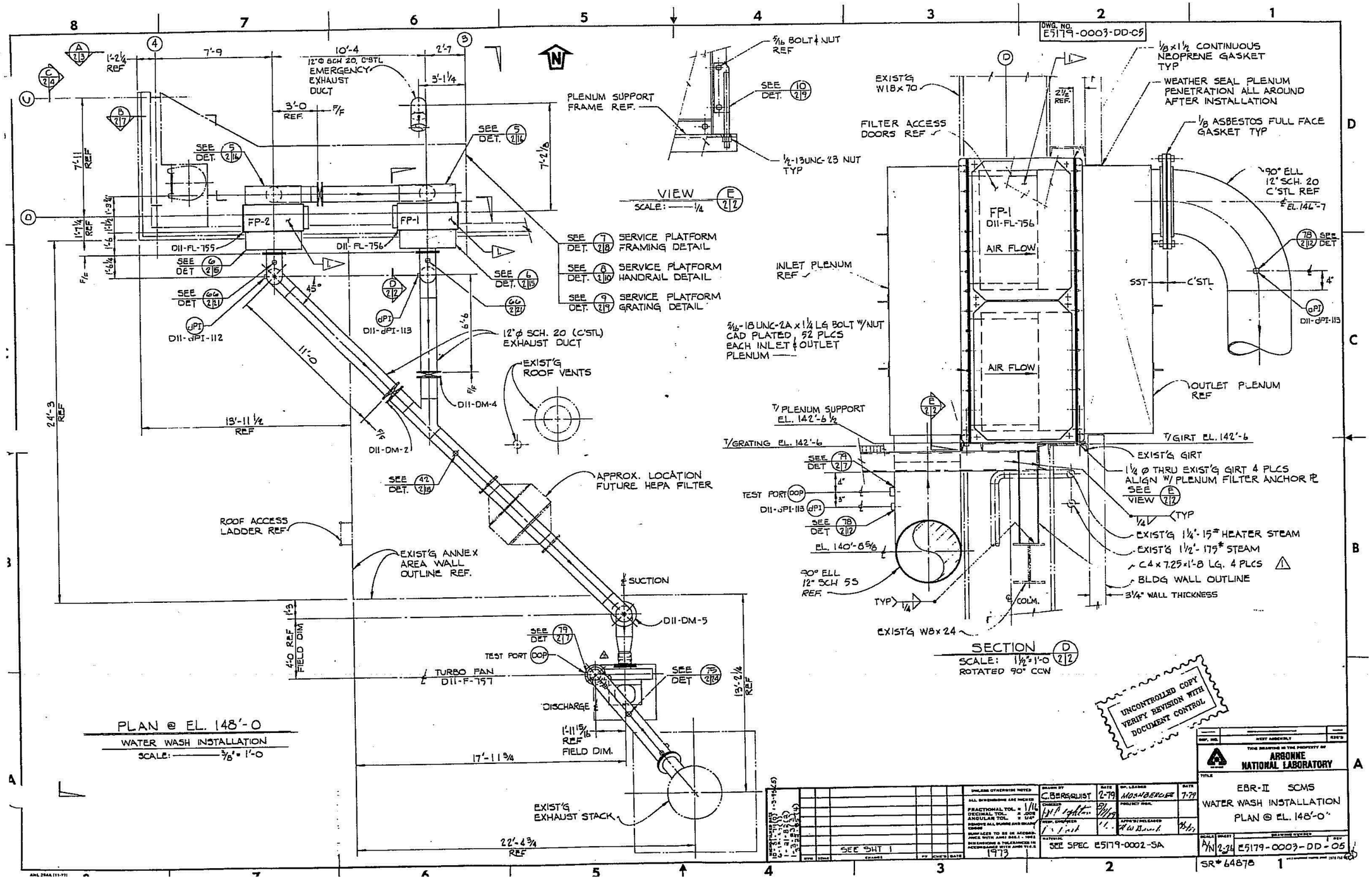
DWG. NO. E5179-0003-DD-05
12"Ø SCH 20, C'STL EMERGENCY EXHAUST DUCT
PLENUM SUPPORT FRAME REF.
5/16 BOLT & NUT REF
SEE DET. 10/2/9
1/2-13UNC-2B NUT TYP
VIEW E/2/2
SCALE: 1/4
SEE DET. 7/2/8 SERVICE PLATFORM FRAMING DETAIL
SEE DET. 8/2/10 SERVICE PLATFORM HANDRAIL DETAIL
SEE DET. 9/2/9 SERVICE PLATFORM GRATING DETAIL
FP-2
FP-1
D11-FL-755
D11-FL-756
D11-dPI-112
D11-dPI-113
12"Ø SCH. 20 (C'STL) EXHAUST DUCT
EXIST'G ROOF VENTS
D11-DM-4
D11-DM-2
APPROX. LOCATION FUTURE HEPA FILTER
ROOF ACCESS LADDER REF.
EXIST'G ANNEX AREA WALL OUTLINE REF.
SUCTION
D11-DM-5
TEST PORT
TURBO FAN D11-F-757
DISCHARGE
EXIST'G EXHAUST STACK
PLAN @ EL. 148'-0
WATER WASH INSTALLATION
SCALE: 3/8" = 1'-0
EXIST'G W18x70
FILTER ACCESS DOORS REF
INLET PLENUM REF
5/16-18UNC-2A x 1 1/4 LG BOLT W/NUT CAD PLATED, 52 PLCS EACH INLET & OUTLET PLENUM
1/8 x 1 1/2 CONTINUOUS NEOPRENE GASKET TYP
WEATHER SEAL PLENUM PENETRATION ALL AROUND AFTER INSTALLATION
1/8 ASBESTOS FULL FACE GASKET TYP
90° ELL 12" SCH. 20 C'STL REF
EL. 146'-7
AIR FLOW
OUTLET PLENUM REF
T/PLENUM SUPPORT EL. 142'-6 1/2
T/GRATING EL. 142'-6
T/GIRT EL. 142'-6
EXIST'G GIRT
1 1/4 Ø THRU EXIST'G GIRT 4 PLCS ALIGN W/ PLENUM FILTER ANCHOR PL
EXIST'G 1 1/4"-15# HEATER STEAM
EXIST'G 1 1/2"-175# STEAM
C4x7.25x1'-8 LG. 4 PLCS
BLDG WALL OUTLINE
3 1/4" WALL THICKNESS
EL. 140'-8 5/8
90° ELL 12" SCH 55 REF
EXIST'G W8x24
SECTION D/2/2
SCALE: 1 1/2" = 1'-0
ROTATED 90° CCW
UNCONTROLLED COPY VERIFY REVISION WITH DOCUMENT CONTROL
ARGONNE NATIONAL LABORATORY
EBR-II SCMS
WATER WASH INSTALLATION
PLAN @ EL. 148'-0"
C. BERSQUIST
SEE SHT 1
SEE SPEC E5179-0002-SA
E5179-0003-DD-05
SR# 64878

Attachment D-17

Photograph of SCMS Scrubber Water Tank

SCMS Scrubber Water Tank
Photo taken August 2013

Attachment D-18

Drawing of SCMS Scrubber Water Tank (Example)

692268 (Sheet 1 of 1) (Alternate Id: E5179-0006-DD)

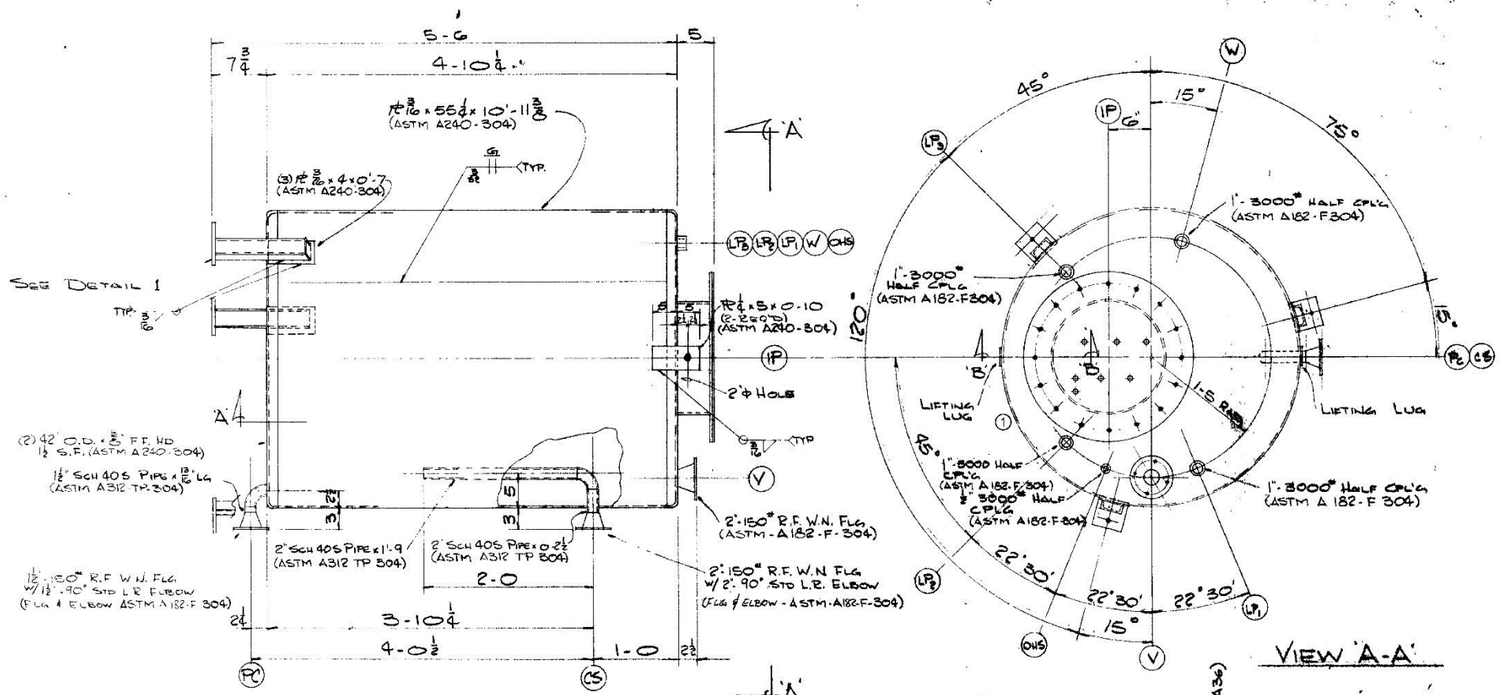

VIEW 'A-A'

ONE-SCRUBBER WATER HOLDING TANK

SERIAL Nº - H-1407 TAG Nº D21-T-758

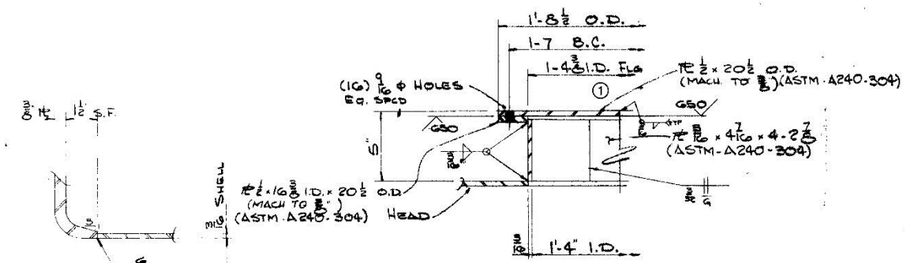

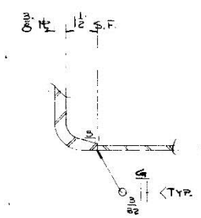

SECTION 'A'

SECTION 'B-B'

FURNISH: (16) 3/8 x 1 1/2 MACH. BOLT W/ NUT (CARBON STL)

(1) (1) EPDM, PREMIUM GRADE A GASKET 1/8" THK x 16 3/8 I.D. x 20 1/2 O.D.

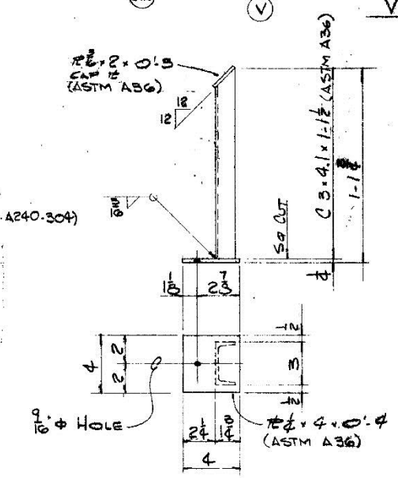

DETAIL 1

(3-REQ'D) (PRIMER PAINT ON LEG & BASE PL ONLY)

NOTE!

1) ALL WELDS ON INSIDE OF TANK SHALL BE GROUND SMOOTH
2) PROVIDE NAME PLATE WITH THE FOLLOWING INFORMATION:
   - TANK NAME - SCRUBBER WATER HOLDING TANK
   - TAG NUMBER - D21-T-758
   - DESIGN PRESSURE - EXTERIOR 5 PSIG, INTERIOR 60 INCHES W.A. @ 200°F
   - WEIGHT - 919 lbs
   - CAPACITY - 350 GALLONS
   - MANUF. NAME TITAN STEEL CORP
   - DATE OF FABRICATION JANUARY 1980
3) FOR LABEL USE BACK SIDE OF OLD API LABEL
4) WORK WITH CUSTOMER SPEC SHEET ITEMS 1 THRU 14
5) INTERIOR TO BE CLEANED OF ALL FOREIGN MATTER
6) SHOP TOLERANCE ± 3/16"

① 7. NEXT ASSEMBLY, DWG. 761127

OHS	1/2"-3000# HALF CPL'G	SODIUM HYDROXIDE SAMPLING
W	1"-3000# HALF CPL'G	MAKEUP WATER
LP3	1"-3000# HALF CPL'G	LEVEL PROBE
LP2	1"-3000# HALF CPL'G	LEVEL PROBE
LP1	1"-3000# HALF CPL'G	LEVEL PROBE
V	2"-150# R.F. W.N. FLG	VENT
IP	16" MANHOLE	
PC	1 1/2"-150# RF WN FLG	PUMP CAUSTIC
CS	2"-150# R.F. W.N. FLG	CAUSTIC SUPPLY
MK Nº	TYPE	SERVICE

INDEX CODE NUMBER

AREA	TYPE	CL	ORG	SERIAL
273	079	353	845	692268

NO.	DATE	NAME BY	CHK'D BY	DESCRIPTION
1				SEE ECR 576927 ME 5/18 2010
4	2-13-80	PW		CHANGED BOLT TO CARBON STEEL
3	2-11-80	PW		REVISED PER CUSTOMER APPROVAL PRINT
2	1-28-80	PW		ADDED HANDLE TO M.H.
1	1-11-80	PW		ADDED LIFTING LUGS

SK-5179-2

MICROFILMED 2-16-82(O)

TITAN STEEL CORPORATION
205 East 21st South
Phone (801) 486-0721
P.O. Box 14485
Salt Lake City, Utah 84115

SCRUBBER WATER HOLDING TANK
3'-6" ϕ x 4-10 1/4
SERIAL Nº H-1407 TAG Nº D21-T-758

SCALE: AS NOTED
PAINT: NO PAINT USE
ENGINEER:
CUSTOMER: ARGONNE NATIONAL LAB.
DR. BY: PW DATE: 1-8-80
CHK'D BY: DATE:
P.O. TF-39986
JOB NO. C-7820
SHEET 1 OF 1
DWG. CHANGE NUMBER E5179-0006-DD - 01 REV.

Attachment D-19

Drawing of SCMS Scrubber Water Tank and Pumps EBR-II SCMS Water Wash Installation Piping Plan (Example)

692265 (Sheet 5 of 26) (Alternate Id: E5179-0003-DD)

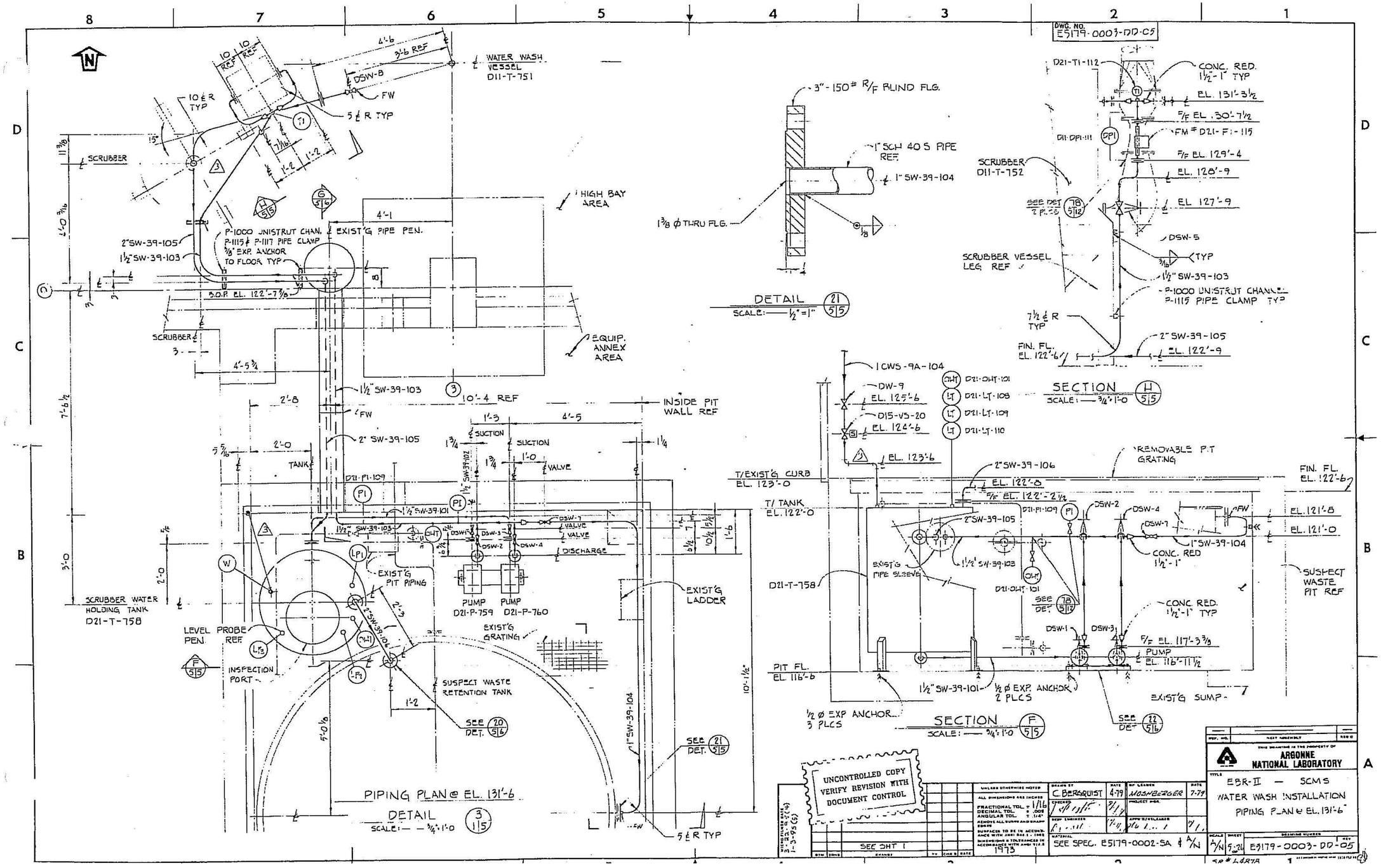

DWG. NO. E5179-0003-DD-C5
WATER WASH VESSEL D11-T-751
HIGH BAY AREA
EQUIP. ANNEX AREA
INSIDE PIT WALL REF
SCRUBBER WATER HOLDING TANK D21-T-758
LEVEL PROBE PEN. REF
INSPECTION PORT
EXIST'G PIT PIPING
EXIST'G GRATING
EXIST'G LADDER
SUSPECT WASTE RETENTION TANK
PUMP D21-P-759
PUMP D21-P-760
PIPING PLAN @ EL. 131'-6
DETAIL 3/1 5
SCALE: 3/4"=1'-0
DETAIL 21/5 5
SCALE: 1/2"=1"
3"-150# R/F BLIND FLG.
1" SCH 40 S PIPE REF
1 3/8 ϕ THRU FLG.
SECTION H/5 5
SCALE: 3/4"=1'-0
SCRUBBER D11-T-752
SCRUBBER VESSEL LEG REF
P-1000 UNISTRUT CHANNEL P-1115 PIPE CLAMP TYP
SECTION F/5 5
SCALE: 3/4"=1'-0
T/EXIST'G CURB EL. 123'-0
T/ TANK EL. 122'-0
REMOVABLE PIT GRATING
SUSPECT WASTE PIT REF
EXIST'G SUMP
PIT FL. EL. 116'-6
1/2 ϕ EXP ANCHOR 3 PLCS
1/2 ϕ EXP. ANCHOR 2 PLCS
UNCONTROLLED COPY VERIFY REVISION WITH DOCUMENT CONTROL
SEE SHT 1
C. BERGQUIST 4-79
MOSHBERGER 7-79
SEE SPEC. E5179-0002-SA & A/N
ARGONNE NATIONAL LABORATORY
EBR-II — SCMS
WATER WASH INSTALLATION
PIPING PLAN @ EL. 131'-6"
E5179-0003-DD-05

Attachment D-20

Drawing of SCMS Water Wash System Control Panel Assembly and NaOH Meter Schematic (Example)

692270 (Sheet 1 of 1) (Alternate Id: E5179-0008-DD)

DWG. NO. ES179-0008-DD

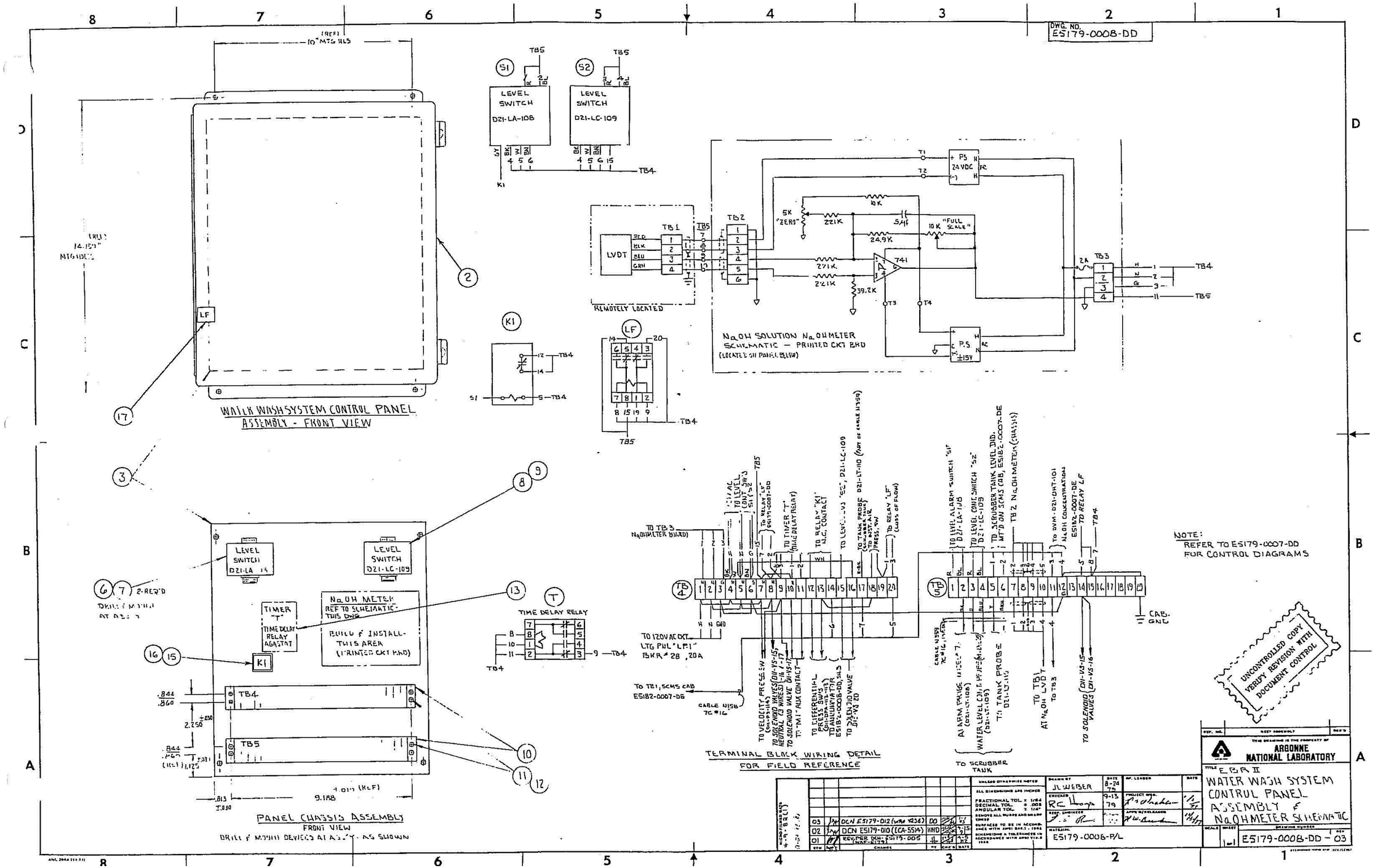

Attachment D-21

Photographs of SCMS Carbonation Vessel

Sodium Components Maintenance Shop
Photo taken August 2013

Sodium Components Maintenance Shop
Photo taken August 2013

Attachment D-22

Drawing of SCMS Carbonation Vessel (Example)

737675 (Sheet 3 of 6) (Alternate Id: W0191-0006-DD)

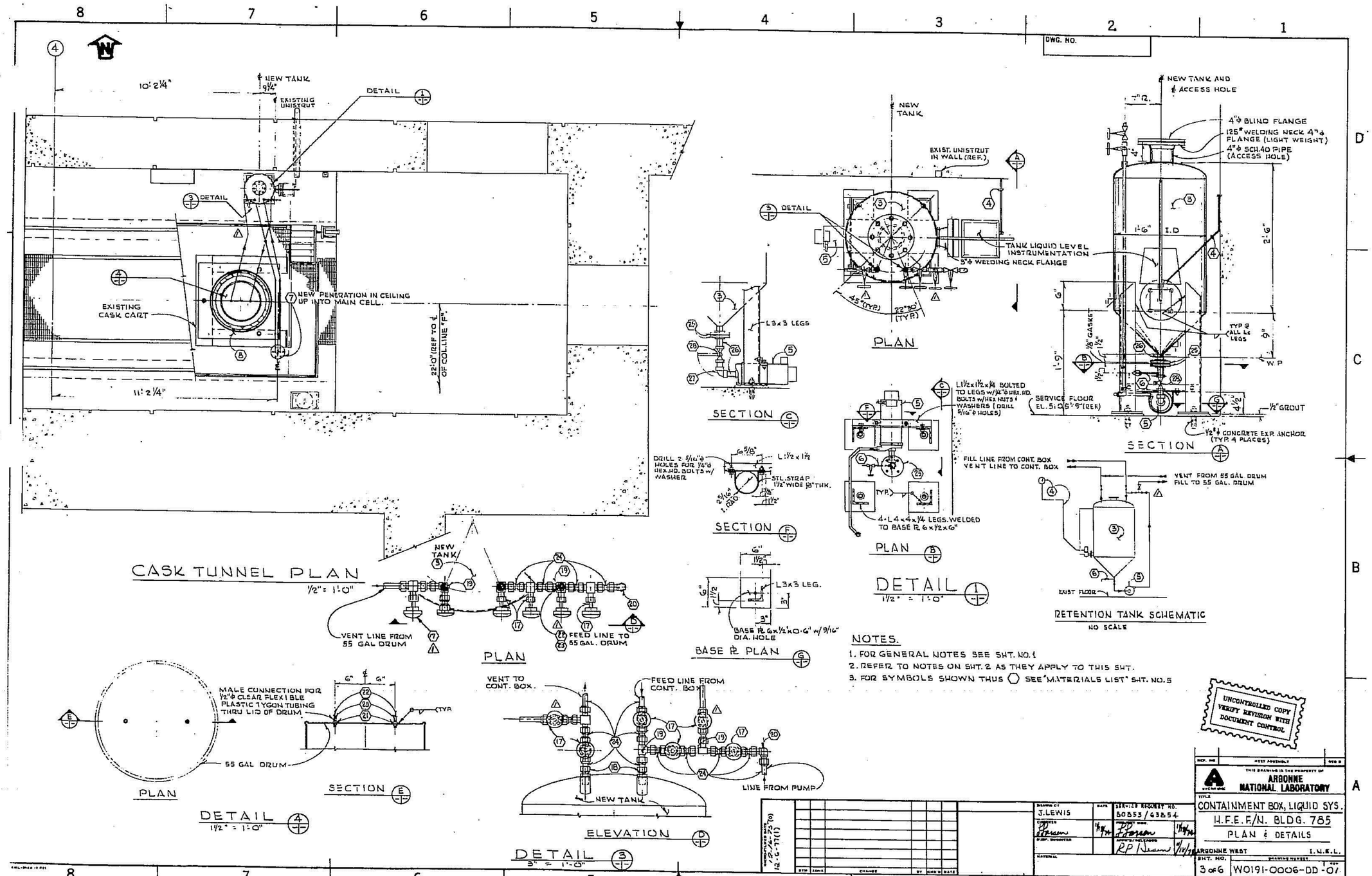

NOTES.

1. FOR GENERAL NOTES SEE SHT. NO. 1
2. REFER TO NOTES ON SHT. 2 AS THEY APPLY TO THIS SHT.
3. FOR SYMBOLS SHOWN THUS ◯ SEE "MATERIALS LIST" SHT. NO. 5

UNCONTROLLED COPY VERIFY REVISION WITH DOCUMENT CONTROL

DWG. NO.

DRAWN BY	J. LEWIS
SERVICE REQUEST NO.	80853/63854
CHECKED	
APPR'D/RELEASED	
MATERIAL	

THIS DRAWING IS THE PROPERTY OF ARGONNE NATIONAL LABORATORY

TITLE: CONTAINMENT BOX, LIQUID SYS.
H.F.E.F./N. BLDG. 785
PLAN & DETAILS

ARGONNE WEST I.N.E.L.

SHT. NO. 3 of 6 | DRAWING NUMBER W0191-0006-DD-01

Attachment D-23

Photograph of SCMS Fixed Solidification Station

SCMS SOLIDIFICATION STATION
Photo taken August 2013

Attachment D-24

Example of Secondary Containment Overpack for 55-Gal Drum

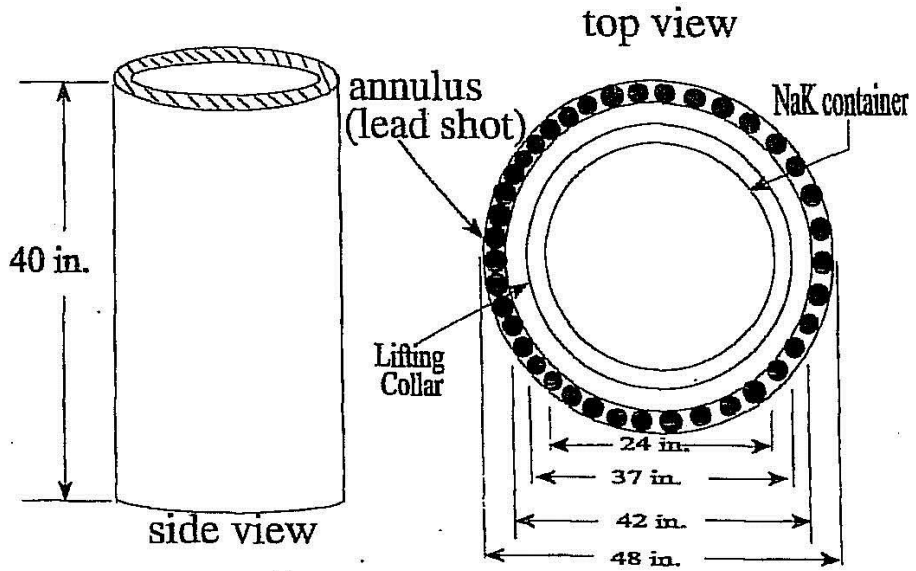

Notes:

1. Material: 114 in. carbon steel.
2. The base is to be of all welded construction
3. Welding shall be in accordance with INL Welding Procedure.
4. All welds to be continuous and to be on the inside of pipe
5. All welds shall be visually inspected for holes and cracks. Any holes or cracks detected shall be repaired.

55-GALLON DRUM SHIELDED OVERPACK

Attachment D-25

Final Report for Certification of Addendum No.1 to the Treatment Documentation for Experimental Breeder Reactor I Sodium Potassium Alloy at the Sodium Components Maintenance Shop and Certification of System Installation

SCIE-COM-231-96

FINAL REPORT FOR CERTIFICATION OF ADDENDUM NO 1 TO THE TREATMENT DOCUMENTATION FOR EXPERIMENTAL BREEDER REACTOR I SODIUM POTASSIUM ALLOY AT THE SODIUM COMPONENTS MAINTENANCE SHOP AND CERTIFICATION OF SYSTEM INSTALLATION

Prepared for

Argonne National Laboratory - West

P.O. Box 2528
Idaho Falls, ID 83403-2528

Prepared by
C.L. Williams, P.E.
ALPHA Engineers
850 S. Main St.
Pocatello, ID 83204
and
M.A. Malone
SCIENTECH, Inc.
1585 N. Skyline Drive
Idaho Falls, ID 83402

January 8, 1996

FINAL REPORT FOR CERTIFICATION OF ADDENDUM NO. 1 TO THE TREATMENT DOCUMENTATION FOR EXPERIMENTAL BREEDER REACTOR I SODIUM POTASSIUM ALLOY AT THE SODIUM COMPONENTS MAINTENANCE SHOP AND CERTIFICATION OF SYSTEM INSTALLATION

The purpose of this final report is to certify in accordance with 40 CFR 264.192 (a) the "Addendum No. 1 to the Treatment Documentation for Experimental Breeder Reactor I Sodium Potassium Alloy at the Sodium Components Maintenance Shop" (Document No. W0001-2001-ES-01 dated January 6, 1996) prepared by J.A. Buzzell, attesting that the design of the Caustic Neutralization Vessel addition to the ARVFS NaK process has sufficient structural integrity and is acceptable for handling and treating hazardous waste in the form of 25% (KOH/NaOH) caustic solution by neutralization with carbon dioxide (CO_2). The subject addendum to the previously certified written assessment of the ARVFS NaK process, addresses the Caustic Neutralization Vessel addition to the existing system. The Written Assessment is required by RCRA in 40 CFR 264.192 and shows that the foundation, structural support, seams, connections, and pressure controls for the Caustic Neutralization Vessel are adequately designed, have sufficient structural strength, compatibility with the hazardous waste, and corrosion protection to ensure that they will not collapse, rupture, or fail during the design life of the ARVFS NaK process. This final report includes the comments provided on the initial version of the addendum dated January 2, 1996, Argonne's resolution of those comments, and certification of the revised addendum by a registered professional engineer.

In addition, this final report certifies the installation of the Caustic Neutralization Vessel addition in accordance with the applicable parts of 40 CFR 264.192 (b) through (h) and as required by 40 CFR 264.192 (g). The inspection of system installation ensures that no [illegible] breaks, punctures, scrapes of protective coatings, cracks, corrosion, or other [illegible]ral damage, or inadequate installation is present; that all new tanks and ancillaries have been tested for tightness and repaired as necessary; that all new ancillaries are supported and protected against physical damage and excessive stress; and that the type and the degree of corrosion protection necessary is provided. This final report includes a certification by a registered professional engineer that the Caustic Neutralization Vessel was properly installed.

Comments on the Addendum to the Written Assessment

1. The design standards of the additional piping and controls are assumed to be the same as the approved ARVFS NaK process. These design standards need to be stated or referenced in the written assessment for the neutralization modification per 40 CFR 264.192(a)(1).

2. The written assessment clearly states that the neutralization tank is a surplus tank designed and fabricated to specification W0191-0002-SA-00. The assessment should state that this specification to which the tank was built equals or exceeds the design requirements of the previously certified ARVFS NaK process with regard to pressure, temperature, and materials of construction, or simply state the applicable design standard for the tank per 40 CFR 264.192(a)(1)

3. The written assessment states that typical operations will never exceed an internal tank pressure of 8.5 psig. Additional discussion or justification (e.g., upset controls) should be provided as to why pressure and level controls for the tank are unnecessary per 40 CFR 264.192(c).

4. The P&ID for the modification does not include all the installed valves in the carbon dioxide supply and does not show the installed location of the pressure gauge. The P&ID should accurately represent the system and modifications.

5. The P&ID should show line sizes and valve sizes.

6. The P&ID should show tank volumes.

7. The P&ID should indicate what part of the system is existing and what part is new (neutralization modification).

8. The caustic neutralization tank is supported on four unbraced legs which are bolted to a wheeled dolly. The wheeled dolly is not anchored to the floor and could move during a seismic event or could be inadvertently moved by an operator. Movement of the dolly could cause the mechanical joints in the stainless steel tubing attached to the tank to leak or the dolly and tank could impact and damage other nearby systems. The dolly or the tank should be restrained from lateral movement and evaluated for overturning. The written assessment should address structural support of the neutralization tank system and state the design considerations per 40 CFR 264.192(a) and (a)(5)(ii).

9. It is assumed that the tank system foundations were assessed and certified for the Wash Water System and the approval is applicable to the neutralization tank modification. The written assessment should indicate the design considerations for the original foundation, per 40 CFR 264.192 (a) and (a)(5)(ii), and any impacts created by the modifications.

10. Since during the process of conducting the installation inspection of the neutralization tank modifications per 40 CFR 264.192(b), the system was also inspected for corrosion along with the other items indicated in the written assessment, then the written assessment should also indicate that item.

Argonne's Resolution of Comments

Argonne responded to the comments, with no exceptions taken, by providing additional information and modifying installation of the system. Argonne's resolution of all of the indicated comments were evidenced by modification of the Addendum (Document No. W0001-2001-ES-01, January 6, 1996) to the Written Assessment and modification of installation of the Caustic Neutralization Vessel system. Resolution of the comments was found to be satisfactory as evidenced by review of the revised Addendum to the Written Assessment and inspection of the modifications to the system installation.

Certifications

The following pages provide the descriptions, statements, and professional engineer certifications for the Addendum to the Written Assessment in accordance with 40 CFR 264.192 (a) and for the proper installation of the assessed system in accordance with 40 CFR 264.192 (g).

Certification of Written Assessment

The Addendum to the Written Assessment is certified, in accordance with 40 CFR 264.192 (a) and 40 CFR 270.11, as it attests that the design of the Caustic Neutralization Vessel system has sufficient structural integrity and is acceptable for handling and treating hazardous waste in the form of 25 % KOH/NaOH caustic solution. The Addendum includes all applicable information required by RCRA in 40 CFR 264.192 (a) and shows that the foundation, structural support, seams, connections, and pressure controls for the Caustic Neutralization Vessel system are adequately designed, have sufficient structural strength, compatibility with hazardous waste, and corrosion protection to ensure that they will not collapse, rupture, or fail during the design life of the system.

I certify under penalty of law that this document and all attachments were prepared under my direction or supervision in accordance with a system designed to assure that qualified personnel properly gather and evaluate the information submitted. Based on my inquiry of the person or persons who manage the ARVFS NaK process, or those directly responsible for gathering the information, the information submitted is, to the best of my knowledge and belief, true, accurate, and complete. I am aware that there are significant penalties for submitting false information, including the possibility of fine and imprisonment for knowing violations.

Charles L. Williams
1-9-96

C. L. Williams, P.E.
January 9, 1996

Certification of System Installation

The installation of the Caustic Neutralization Vessel system in the ARVFS NaK process is certified, in accordance with 40 CFR 264.192 (g) and 40 CFR 270.11, attesting that the system is properly installed in accordance with the requirements of paragraphs (b) through (f) of 40 CFR 264.192. Installation was verified through inspection of the installed system for weld breaks, punctures, scrapes of protective coatings, cracks, corrosion, or other structural damage, or inadequate installation is present; that all new tanks and ancillaries have been tested for tightness; that all new ancillaries are supported and protected against physical damage and excessive stress; and that the type and the degree of corrosion protection necessary is provided. In addition, any identified required repairs were performed and supervised or inspected prior to this certification.

I certify under penalty of law that this document and all attachments were prepared under my direction or supervision in accordance with a system designed to assure that qualified personnel properly gather and evaluate the information submitted. Based on my inquiry of the person or persons who manage the ARVFS NaK process, or those directly responsible for gathering the information, the information submitted is, to the best of my knowledge and belief, true, accurate, and complete. I am aware that there are significant penalties for submitting false information, including the possibility of fine and imprisonment for knowing violations.

Charles Williams
1-9-96

C. L. Williams, P.E.
January 9, 1996

Addendum No. 1

to the

Treatment Documentation

for

Experimental Breeder Reactor I

Sodium Potassium Alloy

at the

Sodium Components Maintenance Shop

Document No. W0001-2001-ES-01

Argonne National Laboratory

INEL, Idaho

January 6, 1996

Prepared By:

J. A. Buzzell

DESCRIPTION OF CAUSTIC NEUTRALIZATION VESSEL
(OPTIONAL PLAN)

The caustic neutralization vessel has been installed into the SCMS water wash system to provide an optional neutralization scenario to that previously described in this documentation (neutralization of caustic inside 55-gal drums). A demonstration of the drum neutralization process indicated that significant radiation exposure could be expected if this process was continued. Alternative neutralization methods were evaluated and the caustic neutralization vessel was adopted as the best alternative. It is expected that this optional method will prove acceptable and replace the drums as the preferred method.

The caustic neutralization vessel is a 30-gallon stainless steel tank with a conical bottom. It is classified as a new tank system and has been assessed, certified and tested in accordance with 40 CFR 265.192. The tank will be operated as a < 90-day accumulation tank in which treatment will occur under the provisions of 40 CFR 262.34. Inspections of the tank will be performed on a daily basis and recorded on the SCMS Operating Log and the Plant Services Roundsman Log. A record of waste added to and removed from the vessel will be maintained in accordance with the < 90-day requirements.

The tank is located next to the water wash vessel and over a diked concrete floor that has been painted with a corrosion resistant epoxy paint. The floor slopes to a drain leading to the suspect waste retention tank that provides additional secondary containment for the water wash system. Leak protection requirements are satisfied through the daily inspections.

Additional descriptions of the caustic neutralization vessel and the neutralization process are found in Addendum No. 1.

1 Purpose

This document provides a written assessment to incorporate the Caustic Neutralization Vessel as part of the ARVFS NaK process. Under the interim document, the KOH/NaOH caustic solution (resulting from reacting liquid sodium-potassium metal with water) was to be neutralized in 55-gallon drums prior to solidification. A full scale demonstration showed this approach to be impractical.

The neutralizing process is being modified to neutralize the caustic in a smaller stainless steel vessel connected to the water wash system. (The water wash system is previously approved for processing liquid sodium-potassium metal and recirculating the caustic.)

2 Description

(Refer to sketch TST317-7AA)

Caustic will be circulated through a 30-gallon stainless steel tank using the chemical pumps, piping and Scrubber Water Tank of the Water Wash System. The 25% KOH/NaOH caustic solution is being stored in the Scrubber Water Tank. Gaseous CO_2 will be injected into the recirculating flow in the Caustic Neutralization Vessel to neutralize the caustic. Once neutralized, the Caustic Neutralization Vessel will be drained and the neutralized caustic stored in the Scrubber Water Tank before solidification. Excess CO_2 is vented to the Water Wash System. Previously, gaseous CO_2 would have been injected into the caustic in 55-gallon drums just prior to solidification.

The tank selected was designed to hold rinse waste from metallography sample preparation but was never used. Its design is described in the Liquid Waste Transfer System for HFEF/N Station 2M Containment Box Design Criteria, specification W0191-0002-SA-00, and on drawings W0191-0006-DD-01 (6 sht's.).

This tank has been inspected for weld breaks, punctures, corrosion, and cracks. None were found. The tank is not coated. The original supports are being used. This tank is not subject to flotation, dislodgement or frost heaving. The tank is bolted to a 3 X 3 foot steel platform raised on casters and anchored to the concrete floor. The anchors are sufficiently strong to prevent horizontal motion during design-basis seismic events or inadvertent disturbances. In addition to the anchors, tipping is precluded by the platform base-to-tank height aspect. The foundation was previously approved for secondary containment.

Flow tests, using compressed air and water, were performed simulating conditions anticipated for neutralization. Prior to testing, the tank was successfully hydrostatically leak tested at 25 psig. Tank pressure never exceeded 8.5 psig during these tests. The design specification required the vessel be constructed of either 316 stainless steel or 304 stainless steel. Both steels are compatible with 25% KOH/NaOH.

Originally, neutralization was to occur in 55-gallon steel drums conforming to the ANSI standard for Material Handling (ANSI MH2-1991). The proposed tank, designed and fabricated per specification W0191-0002-SA-00, exceeds pressure, temperature and compatibility requirements for neutralization provided by the 55 gallon drum. Hydrostatic leak testing confirms this comparison.

The neutralization procedure limits temperature to less than 190°F. A thermocouple has been installed to verify this temperature is not exceeded. While the Caustic Neutralization Vessel is capable of withstanding pressures greater than 8.5 psig, the Water Wash Recirculation/Neutralization System, operating per the neutralization procedure, is incapable of greater pressures. Vessel pressure is relieved directly to the Water Wash Scrubber which operates at a negative pressure. Pressure is also monitored during neutralization. Caustic level is limited by the normal recirculating path - the Caustic Neutralization Vessel overflows to the Scrubber drain. Unintended overflow through the vent would return caustic to the drain. Flow and level are monitored through sight tubes in vent and overflow drain. After neutralization, the tank is verified empty through the overflow drain sight tube.

Tubing connections are made using same type fittings approved in the interim document as well as same type valves. Specifications for fittings and valves are stated in the attachment for Neutralization/Solidification System Set Up, TST317-H and conform to Swagelok and Whitey industrial standards. Connections have been pressurized with 3 psig argon gas and leak tested using a Gow Mac leak detector set on the most sensitive scale. Leaks have been repaired before the system is put into operation.

3 Conclusions

This assessment shows the tank and associated piping are suitable for containing 25% KOH/NaOH and gaseous CO_2 at anticipated pressures and temperatures. While equipment is being added, the process is fundamentally unchanged. All other conditions of the agreement will be met.

No1: PROCESSING NEUTRALIZATION PROCESS & INSTRUMENTATION

TST317-7AA

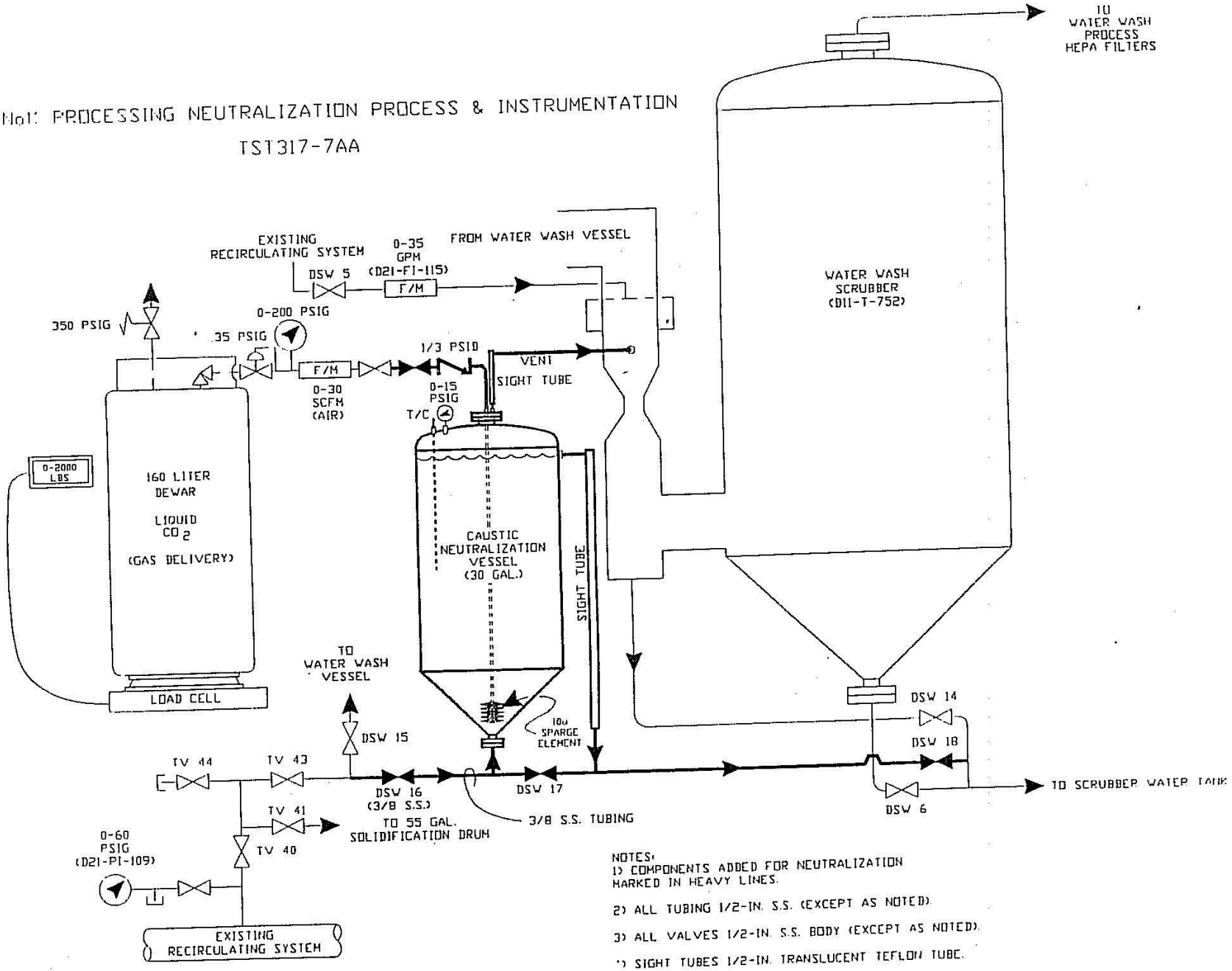

NOTES:
1) COMPONENTS ADDED FOR NEUTRALIZATION MARKED IN HEAVY LINES.

2) ALL TUBING 1/2-IN. S.S. (EXCEPT AS NOTED).

3) ALL VALVES 1/2-IN. S.S. BODY (EXCEPT AS NOTED).

4) SIGHT TUBES 1/2-IN. TRANSLUCENT TEFLON TUBE.

Attachment D-26

Drawing of SCMS Pit Plan and Details

749631 (Sheet 4 of 5) (Alternate ID: W7930-0101-DD) (Example)

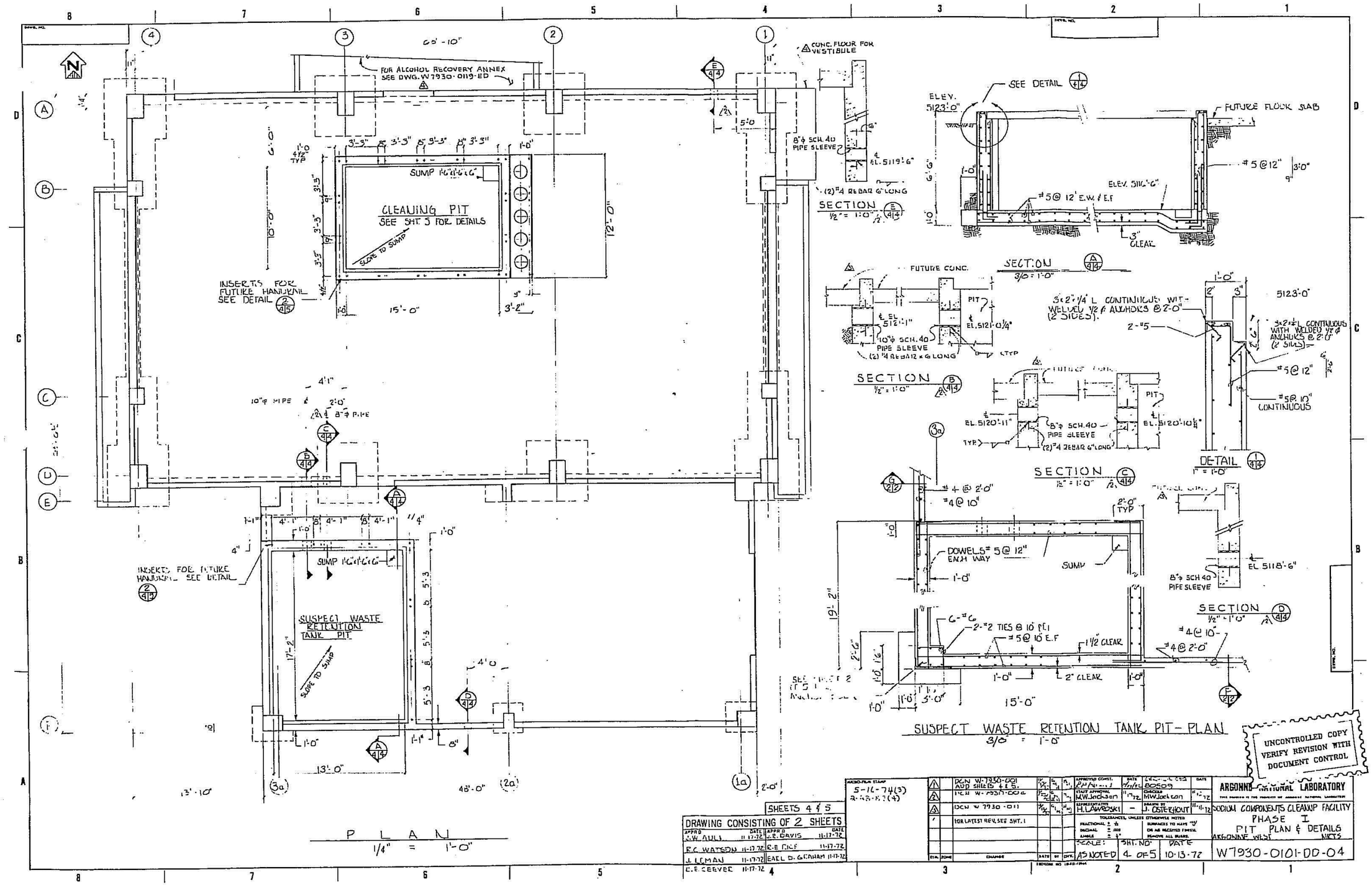

UNCONTROLLED COPY
VERIFY REVISION WITH
DOCUMENT CONTROL

SHEETS 4 & 5

DRAWING CONSISTING OF 2 SHEETS

APPRD	DATE	APPRD	DATE
J.W. AULL	11-17-72	J.E. DAVIS	11-17-72
R.C. WATSON	11-17-72	R.E. RICE	11-17-72
J. LEMAN	11-17-72	EARL D. GRAHAM	11-17-72
C.E. CEEVER	11-17-72		

ARCHIVE FILM STAMP
5-16-74(3)
2-28-87(4)

REV.	ZONE	CHANGE	DATE	BY	CHK.
1		DCN W-7930-0021 ADD SHEETS 4 & 5.	3/2/72		
2		DCN W-7930-0026	11/17/72		
3		DCN W 7930-0111	3/8/73		
4		FOR LATEST REV. SEE SHT. 1			

REVISION NO. 1 2 3 4

APPROVED CONST. — DATE 11/17/72
STAFF APPROVAL — DATE 11/17/72
REPRESENTATIVE H. LAWROSKI
CHECKED — DATE 11/17/72
DRAWN BY J. OSTERHOUT — DATE 11-11-72

TOLERANCES, UNLESS OTHERWISE NOTED
FRACTIONAL ± 1/16
DECIMAL ± .005
ANGLE ± 1/2°
SURFACES TO HAVE 125 OR AS SPECIFIED FINISH
REMOVE ALL BURRS

SCALE: AS NOTED
SHT. NO. 4 OF 5
DATE 10-13-72

ARGONNE NATIONAL LABORATORY
THIS DRAWING IS THE PROPERTY OF ARGONNE NATIONAL LABORATORY

SODIUM COMPONENTS CLEANUP FACILITY
PHASE I
PIT PLAN & DETAILS
ARGONNE WEST — NRTS

W7930-0101-DD-04

Attachment D-27

Documentation of Age of SCMS Water Wash Vessel

ARGONNE NATIONAL LABORATORY
SUPPLIER QUALITY CONTROL RELEASE

MO. DAY YR.	2. SUPPLIER NAME & LOCATION	3. SHIPPER NO. & MODE	4. ANL PROC. I.D. NO
-24-80	PX ENGINEERING WOBURN, MA.	TRUCK	IF-2929

SHIPMENT NO. PARTIAL SHIP ☐ FINAL SHIP ☑	6. PROJECT NAME/NO.	7. ANL PROC. REP.	8. ANL DESTINATIO
	EBR-II ANL-W	S. Wilson	ANL-W EBR-II Si SCAVILLE, IDA

MATERIAL DESCRIPTION

NO.	PART OR MATERIAL NAME	PART NO.	TOTAL QTY.	LOT SIZE	QTY. INSP.	QTY. ACC.	SERIAL N USE ADD'L S IF REQUI
	WATER WASH VESSEL	SK5179-1	1	1	1	1	

CHECK LIST

A. MILL TEST REPORTS	✓	K. FIRST ARTICLE	N/A
B. CHECK ANALYSIS	✓	L. MANUAL & INSTR.	N/A
C. CERTIFICATE OF CONFORMANCE		M. PROCESS CERT.	✓
		N. IDENTIFICATION	✓
D. WELD REPORTS		O. WELD SPECIMENS	✓
E. NDT REPORTS	✓	P. TEST BARS	✓
F. RADIOGRAPHIC FILM (PRESS & LEAK)	✓	Q. PARTS LIST	N/A
G. FUNCTIONAL TEST	✓	R. I.D. AGE CONTROL	N/A
H. AS BUILT DRWG.	✓	S. CLEANING	✓
I. CODE CERTS.	✓	T. FINAL TEST REPORTS	✓
J. PERSONNEL CERTS.		U. PKG. WITNESS	✓

11. NONCONFORMANCES

SDR NO. CAR	PART NO.	QTY.	CL YES
23842	SEE ABOVE	1	✓
23840	SEE ABOVE	1	✓

12. COMMENTS ANL Spec. E-5179-000/-SA-01

13. DOCUMENT PKG. FOR SQER ☑ DOCUMENT PKG. WITH SHIPMENT ☐

DOCUMENT PKG. SHIPPED TO S. Wilson NOTE: SHIPMENT NOT TO BE RELEASED WITHOUT COMPLETE DOCUMENT

SHIPMENT RELEASED:

CONDITIONAL (*) ☐ (*) EXPLAIN CONDITIONAL IN COMMENTS

UNCONDITIONAL ☑ BY SQER [signature] DATE 10, 24

THIS ANL SQC RELEASE DOES NOT CONSTITUTE FINAL ACCEPTANCE

5331 (5-72)

Form [illegible]

Par[illegible] / of /

Job No.	Customer	Drawing No.	Spe[illegible] No.
625	ARGONNE NATIONAL LAB	625	IF-39393

Inspection Status: Source ☐ Receipt ☐ In-Process ☐ Final ☒

Item/ Description	Standards Applied	Actual Condition	Accept	Reject	Remarks/ Deficiency No.	Inspector Date
HYDROSTATIC TEST	86 PSIG	86 PSIG	✓			[signature] 10/1/80
	10 MINUTES MIN	10 MIN.	✓			
	GAUGE # 4	#4	✓			
RESULTS	OK	OK	✓			

ARGONNE NATIONAL LABORATORY No. 26588

CUSTOMER DIV./BLDG.	MONTH / DAY / YEAR	DRWG. RT. NO.		REV.
[illegible]	[illegible]	[illegible]		

SUPPLIER NAME	AUTHORIZATION DOCUMENT	ITEM NO.
[illegible]	[illegible]	

PART OR MATERIAL NAME	J.C.P.	AQL NO.
[illegible]		[illegible]

MATERIAL CSID	LOT SIZE	QTY. INSP.	QTY. ACCEPTED	EXAMINERS IDENT.

SERIAL NOS.

REMARKS

[illegible]

REQUESTOR

CERTIFICATION

SIGNATURE BELOW AUTHENTICATES THE AVAILABILITY AND COMPLETENESS OF ALL ACCEPTANCE RECORDS REQUIRED BY ABOVE AUTHORIZATION DOCUMENT

SPEC. NO. [illegible] AUTHORIZED SIGNATURE DATE

WHITE–CUSTOMER BLUE–CS OR QC CANARY–PQE GREEN–MATERIAL

ACCEPTED

BONDED STORAGE CSID #

ANL-316 (1-77)

Attachment D-28

SCMS Secondary Containment (Example)

Drawing of SCMS High Bay Floor Plan and Details

748438 (Alternate ID: W7930-0111-DD)

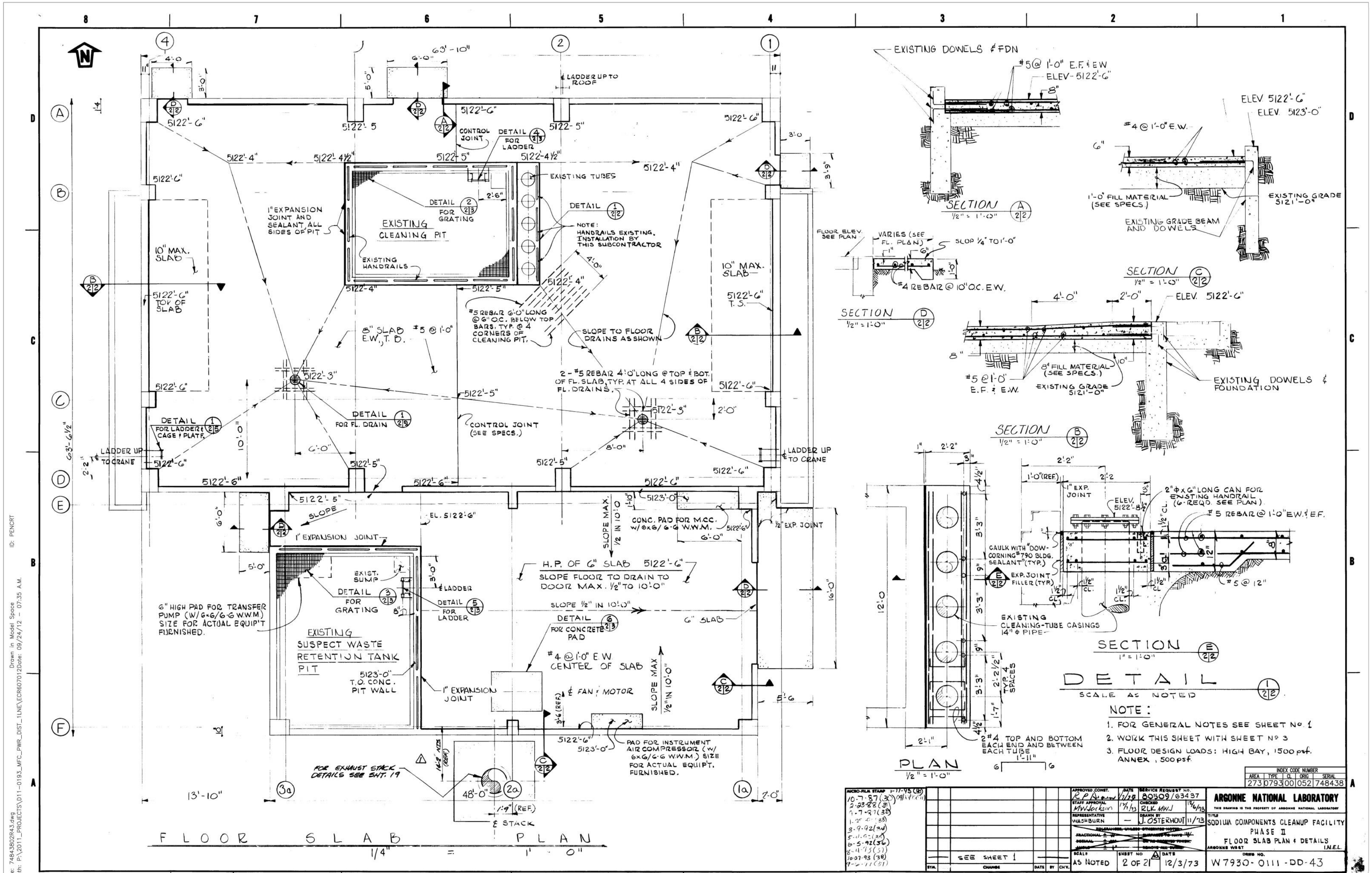

FLOOR SLAB PLAN
1/4" = 1'-0"
EXISTING CLEANING PIT
EXISTING TUBES
DETAIL FOR GRATING
DETAIL FOR LADDER
CONTROL JOINT
1" EXPANSION JOINT AND SEALANT, ALL SIDES OF PIT
EXISTING HANDRAILS
NOTE: HANDRAILS EXISTING, INSTALLATION BY THIS SUBCONTRACTOR
10" MAX. SLAB
5122'-6" TOP OF SLAB
5122'-6" T.S.
8" SLAB #5 @ 1'-0" E.W., T.B.
#5 REBAR 6'-0" LONG @ 6" O.C. BELOW TOP BARS, TYP. @ 4 CORNERS OF CLEANING PIT.
SLOPE TO FLOOR DRAINS AS SHOWN
2 - #5 REBAR 4'-0" LONG @ TOP & BOT. OF FL. SLAB, TYP. AT ALL 4 SIDES OF FL. DRAINS.
DETAIL FOR FL. DRAIN
CONTROL JOINT (SEE SPECS.)
DETAIL FOR LADDER & CAGE & PLATF.
LADDER UP TO CRANE
LADDER UP TO ROOF
63'-10"
63'-6 1/2"
EXISTING SUSPECT WASTE RETENTION TANK PIT
5123'-0" T.O. CONC. PIT WALL
6" HIGH PAD FOR TRANSFER PUMP (W/ 6x6/6-6 W.W.M.) SIZE FOR ACTUAL EQUIP'T FURNISHED.
EXIST. SUMP
1" EXPANSION JOINT
H.P. OF 6" SLAB 5122'-6"
SLOPE FLOOR TO DRAIN TO DOOR MAX. 1/2" TO 10'-0"
SLOPE 1/2" IN 10'-0"
SLOPE MAX. 1/2" IN 10'-0"
6" SLAB
DETAIL FOR CONCRETE PAD
#4 @ 1'-0" E.W. CENTER OF SLAB
℄ FAN & MOTOR
CONC. PAD FOR M.C.C. W/ 6x6/6-6 W.W.M.
1/2" EXP. JOINT
PAD FOR INSTRUMENT AIR COMPRESSOR (W/ 6x6/6-6 W.W.M.) SIZE FOR ACTUAL EQUIP'T. FURNISHED.
FOR EXHAUST STACK DETAILS SEE SHT. 19
℄ STACK
SECTION A 2/2 1/2" = 1'-0"
EXISTING DOWELS & FDN
#5 @ 1'-0" E.F. & E.W.
ELEV - 5122'-6"
SECTION C 2/2 1/2" = 1'-0"
ELEV 5122'-6"
ELEV. 5123'-0"
#4 @ 1'-0" E.W.
1'-0" FILL MATERIAL (SEE SPECS.)
EXISTING GRADE 5121'-0"
EXISTING GRADE BEAM AND DOWELS
SECTION D 2/2 1/2" = 1'-0"
FLOOR ELEV. SEE PLAN
VARIES (SEE FL. PLAN)
SLOP 1/4" TO 1'-0"
#4 REBAR @ 10" O.C. E.W.
SECTION B 2/2 1/2" = 1'-0"
ELEV. 5122'-6"
8" FILL MATERIAL (SEE SPECS.)
#5 @ 1'-0" E.F. & E.W.
EXISTING GRADE 5121'-0"
EXISTING DOWELS & FOUNDATION
PLAN 1/2" = 1'-0"
EXISTING CLEANING-TUBE CASINGS 14" ϕ PIPE
2 #4 TOP AND BOTTOM EACH END AND BETWEEN EACH TUBE
TYP. 4 SPACES
SECTION E 2/2 1" = 1'-0"
1" EXP. JOINT
ELEV. 5122'-8 1/2"
2" ϕ x 6" LONG CAN FOR EXISTING HANDRAIL (6-REQD. SEE PLAN)
#5 REBAR @ 1'-0" E.W. & E.F.
CAULK WITH "DOW-CORNING #790 BLDG. SEALANT" (TYP.)
EXP. JOINT FILLER (TYP.)
#5 @ 12"
DETAIL 1 2/2 SCALE AS NOTED
NOTE:
1. FOR GENERAL NOTES SEE SHEET No. 1
2. WORK THIS SHEET WITH SHEET No 3
3. FLOOR DESIGN LOADS: HIGH BAY, 1500 psf. ANNEX, 500 psf.
INDEX CODE NUMBER
AREA 273 TYPE 0793 CL 00 ORIG 052 SERIAL 748438
MICRO-FILM STAMP 1-17-95 (40)
10-7-87 (30)
2-23-88 (31)
3-9-92 (34)
6-5-92 (36)
10-27-93 (38)
SEE SHEET 1
APPROVED CONST.
SERVICE REQUEST NO. 80509/63437
STAFF APPROVAL MWJackson
CHECKED RLK
REPRESENTATIVE WASHBURN
DRAWN BY J. OSTERHOUT 11/73
ARGONNE NATIONAL LABORATORY
THIS DRAWING IS THE PROPERTY OF ARGONNE NATIONAL LABORATORY
TITLE SODIUM COMPONENTS CLEANUP FACILITY PHASE II FLOOR SLAB PLAN & DETAILS
ARGONNE WEST I.N.E.L.
SCALE AS NOTED
SHEET NO 2 OF 21
DATE 12/3/73
DRWG NO. W7930-0111-DD-43
File: 74843802R43.dwg
Path: P:\2011_PROJECTS\D11-0193_MFC_PWR_DIST_1LNE\ECR607012
Date: 09/24/12 - 07:35 A.M.
Drawn in Model Space
ID: PENCRT

Attachment D-29

Field Testing Report for Cathodic Protection
of the RSWF Liners at ANL-W Site

Engineers
Planners
Economists
Scientists

August 17, 1989

BOI27770.A1.02

Mr. Royce L. Brookshier
Argonne National Laboratory
Argonne-West
P.O. Box 2528
Idaho Falls, Idaho 83403-2528

Dear Mr. Brookshier:

Subject: Phase 2 Report and Cathodic Protection Design for RSWF Liners at the ANL-W Site

Enclosed with this letter are one bound and one unbound copy of the final Phase 2 Field Testing and Cathodic Protection Design Report and Field Data. Under separate cover is one unbound copy of the Cathodic Protection Specifications and one mylar copy of the Cathodic Protection Drawings. We have incorporated your review comments in these documents. We have also shown the proposed Phase 1 Cathodic Protection Installation as Sheet 3 of the drawings.

We have enjoyed working with you and the other INEL personnel on this project. If you have any questions concerning this report or our design, please do not hesitate to call.

Very truly yours,

William S. Spickelmire

William S. Spickelmire
Corrosion Engineering

George H. Silkworth

George H. Silkworth
Corrosion Control Services

BOIT010/011.50/jai

FIELD TESTING REPORT
FOR
CATHODIC PROTECTION OF THE RSWF LINERS AT ANL-W SITE

Prepared for

ARGONNE NATIONAL LABORATORY-WEST

Prepared by

CH2M HILL CENTRAL, INC.
Boise, Idaho

August 1989
BOI27770.A1.02

Prepared By George H. Silkworth
Approved By William S. Spickelmier

FIELD TESTING REPORT
FOR
CATHODIC PROTECTION OF THE RSWF LINERS AT ANL-W SITE

Prepared for

ARGONNE NATIONAL LABORATORY-WEST

Prepared by

CH2M HILL CENTRAL, INC.
Boise, Idaho

August 1989
BOI27770.A1.02

DESIGN CRITERIA
FOR
CATHODIC PROTECTION OF
THE RSWF LINERS AT ANL-W SITE

During the week of June 12, 1989, corrosion testing was performed at the RSWF site to determine the resistivity of the soil throughout the area in which the liners are presently buried. The electrical resistivity of the soil was measured by the "Wenner" four pin method. These tests consisted of 90 soil resistivity measurements to average depths of 2.5, 5.0, 7.5, 10.0, and 15.0 feet. Both average and layer resistivity calculations were made from these measurements for the layers 0 to 2.5 ft., 2.5 to 5.0 ft., 5.0 to 7.5 ft., 7.5 to 10.0 ft., and 10.0 to 15.0 ft. These layer resistivities were then plotted to show variations in the soil resistivity throughout the area in which the liners are buried. This information is shown in the appendix.

Cathodic protection measurements were made during 1989 testing on the 26" liners with galvanic anodes installed in 1978. During the 1989 testing, these liners had protected cathodic protection potentials. Potentials were higher (due to polarization) than in previous tests made in 1978 and 1982. Cathodic protection current had increased but was still acceptable. The current increase was probably due to coating deterioration. The results of these tests are shown on Data Sheets 7 and 8.

The cold trap shell was also tested and found to have protected cathodic protection potential levels. Potential to a reference electrode had increased (due to polarization).

Anode current had increased but was still acceptable. The current increase was probably due to coating deterioration. The results of the tests are shown on Data Sheets 7 and 8.

Cathodic protection for the coated 26" liners and the cold trap shell was provided by the existing galvanic anode system. These anodes should not need replacement for several years.

Cathodic protection tests were also made of the existing bare 16" liners to determine the amount of current required for protection. This information was used to determine the amount of current required for the new 16" and 24" liners. The results of the tests are shown on Data Sheets 2 and 3.

In order to provide a margin of safety, the design criterion used for protection of the liners is to obtain a structure to soil potential of -1.00 volts measured at the surface of the earth with the electrode placed approximately one foot from the liner.

The following criteria were used in designing the cathodic protection system for the RSWF liners:

1. The new liners should be installed without coating since the radioactivity of the material to be stored in the liner is unknown and its effect on coatings would therefore be unknown. If coatings were used, the cathodic protection system would still need to be designed for a bare liner since the life and effectiveness of the coating are unknown. For this reason, the cost of the cathodic protection system is the same whether the liners are coated or bare.

2. The current requirement for cathodic protection to a protective level of -1.00 volts is 5.28 mA/sq ft for an uncoated liner. The following table describes the surface area and current requirement for both liner sizes.

Liner Size (Dia.)	Surface Area (sq ft)	Current Required for Protection (mA)
16"	52	275
24"	79	417

3. The system will be designed so that one anode will protect four liners and the anode will be large enough to provide 15 to 20 years service. For the 16" liners a 3" x 60" graphite anode will be used. For the 24" liners a 4" x 80" graphite anode will be used.

4. Anodes will be buried so that the top of the coke breeze column will be located 3 feet below grade. This will ensure that any excavation for wire connections to the liners will not damage the anode. The anode will be buried in a 12" diameter hole with coke breeze backfill compacted around the anode and one foot above and below the anode.

5. Rectifiers will be 480-volt, 3-phase, air cooled, and will be pad-mounted on the inside of the RSWF fence. Four rectifiers will be located on the northeast side and 4 will be located on the southwest side. These locations were chosen so that the rectifiers can be checked monthly from the perimeter road inside the RSWF area. There is room between the road and fence for the rectifiers and they should be out of the way of any future expansion. Rectifiers will have a dc output of

60 amperes and 20 volts with sufficient taps so that the output can be adjusted to meet the needs of the system.

6. In the conceptual design, it was assumed that four or five rectifiers would be needed to provide protection to the existing 880 liners. With the expansion of the number and size of the liners in the RSWF site to 1300, eight rectifiers will be needed.

7. Cable for connection of the rectifier to the anodes and the rectifier to the liners will have high molecular weight polyethylene insulation. Cable sizes will be as follows:

Rectifier to Junction Box	#2 AWG Copper
Junction Box to Anode Splice	#4 AWG Copper
Junction Box to Liner Splice	#4 AWG Copper
Liner Splice to Liner	#8 AWG Copper
Anode Splice to Anode	#8 AWG Copper

8. All cables will be buried 2 feet below grade and will have a marking tape installed above the buried cable to prevent accidental damage to the cable.

9. Connections of the conductor to the liners will be made by the vertical exothermic welding process. The connection will be made above grade and the cable exposed so that a current measurement can be made with a clamp-on ammeter.

10. Junction boxes will be used to make connections between the rectifier and the anode strings. They will also be used for connections to various rows of liners.

11. The 26" liners that are presently protected with galvanic anodes should be connected to the new cathodic protection system when the anodes are installed in their area. This includes the cold trap liner.

12. Interference from the new system will exist for about 25 to 30 feet from an operating anode. If there are liners not connected to an operating system that are within the above distance, tests should be made to determine the best method of eliminating the interference. At some locations, bonding with resistance bonds may be required while others may be controlled by adjustment of the system.

13. It is assumed that the 480-volt ac supply will be furnished by INEL to an entrance switch at each rectifier.

14. The system is designed so that it can be built in different phases.

15. The junction boxes were installed in the rectifier slab.

16. A Phase 1 Cathodic Protection System was prepared to show the initial cathodic protection system required for protection of liners by legs 5 and 6.

17. A materials quantity estimate is included in the appendix for both the master cathodic protection plan and proposed Phase I installation.

The system is designed to provide sufficient cathodic protection current to polarize the steel liners. Current output will decrease as polarization occurs and the output of the rectifiers will need to be decreased. In actual operations the effect of polarization will act as a safety factor, since the polarized steel liner will require less current than provided by this system. Adjustments will need to be made several times during the first year of operation.

The rectifiers should be monitored monthly and a comprehensive survey should be made at least once a year.

BOIT010/001.WP/jai

CATHODIC PROTECTION DESIGN TESTS OF RSWF LINERS AT INEL

BY: GHS DATE: 6/13/89 SHEET 1 OF 8

GENERAL CONFIGURATION OF LINERS USED IN CATHODIC PROTECTION TESTS

	○ J-26		
	○ J-27		
	○ J-28		
○ L-29	○ J-29	○ H-29	
○ L-30	○ J-30	○ H-30	
○ L-31	○ J-31	○ H-31	
○ L-32	○ J-32	○ H-32	○ F-31
	○ J-33		
	○ J-34		
	○ J-35		

BOIT010/002.WP/jai

CATHODIC PROTECTION DESIGN TESTS OF RSWF LINERS AT INEL

BY: GHS DATE: 6/13/89 SHEET 2 OF 8

CURRENT REQUIREMENTS FOR PROTECTION OF ONE 16" LINER

Use J-30 as an anode

Use J-31 as the cathode

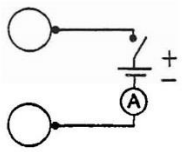

	Liner/Ref Electrode Potential	Cathodic Protection Current
Battery off	-0.440 volts	0
Battery on	-1.204 volts	375 mA

For protection level of -1 volt, current required is:

$$\frac{1.203 - 0.440}{375 \text{ mA}} = \frac{1.00 - 0.440}{x}$$

x = 274 mA--Current required per liner for -1.0 volt protective potential of 16-inch liner

BOIT010/003.WP/jai

CATHODIC PROTECTION DESIGN TESTS OF RSWF LINERS AT INEL

BY: GHS DATE: 6/13/89 SHEET 3 OF 8

Design of cathodic protection system for new 24" liners to be installed at the RSWF site.

Information from testing at the RSWF site showed that approximately 275 mA of current is required to obtain a -1.0-volt protective potential on one 16" liner. This amount of current protects 52 sq ft of pipe surface. The current requirement is therefore equal to 5.28 mA per sq ft of pipe surface.

Assuming the new 24" liners will require the same amount of current per sq ft of surface area as the 16" liners, the current requirement per 24" liner will be 79 sq ft x 5.28 mA per sq ft = 417 mA per liner.

BOIT010/004.WP/jai

CATHODIC PROTECTION DESIGN TESTS OF RSWF LINERS AT INEL

BY: GHS DATE: 6/13/89 SHEET 4 OF 8

Check interference on adjacent liners when using J-30 as an anode and J-31 as the cathode. (See Sheet No. 1 for location of liners).

Interrupted current of temporary cathodic protection system shown on Sheet No. 2.

Current	J-29	J-28	J-27	J-26
OFF--0	-0.385 v	-0.397 v	-0.391 v	-0.396 v
ON--375 mA	-0.406 v	-0.413 v	-0.398 v	-0.397 v

The interference effect of an anode protecting one liner is approximately 25 to 30 feet from the protected liner.

BOIT010/005.WP/jai

CATHODIC PROTECTION DESIGN TESTS OF RSWF LINERS AT INEL

BY: GHS DATE: 6/13/89 SHEET 5 OF 8

Testing to determine current requirements using two liners as cathodes and one liner as an anode:

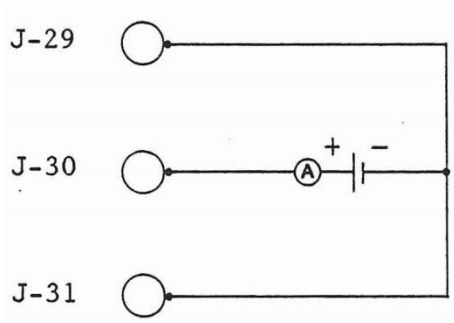

Use 410 mA for cathodic protection current.

Current	J-29 Liner/Ref Elect	J-31 Liner/Ref Elect
OFF	-0.412 v	-0.431 v
ON--410 mA	-0.789 v	-0.923 v

Increase total cathodic protection current to 580 mA.

Current	J-29 Liner/Ref Elect	J-31 Liner/Ref Elect
OFF	-0.416 v	-0.438 v
ON--580 mA	-1.020 v	-1.123 v

Measure current to each liner: J-29 = 280 mA
J-31 = 300 mA

BOIT010/006.WP/jai

CATHODIC PROTECTION DESIGN TESTS OF RSWF LINERS AT INEL

BY: GHS DATE: 6/13/89 SHEET 6 OF 8

Testing to determine current requirements using four liners as cathodes and one liner as an anode:

Use J-30 as the anode, and J-29, H-30, J-31, and L-30 as cathodes.

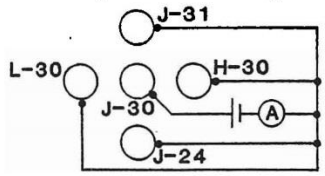

Adjusted current in circuit to one ampere

Current	L-30 Liner/Ref	J-29 Liner/Ref	H-30 Liner/Ref	J-31 Liner/Ref
OFF	-0.441 v	-0.426 v	-0.435 v	-0.455 v
ON--1 A	-0.990 v	-1.029 v	-0.987 v	-1.120 v

Assume equal current to each anode--250 ma to each. Approximately the same as in previous tests.

Testing for Interference

Current	J-32 Liner/Ref	J-34 Liner/Ref	J-35 Liner/Ref	F-31 Liner/Ref
OFF	-0.389 v	-0.383 v	-0.408 v	-0.392 v
ON--1 A	-0.406 v	-0.384 v	-0.408 v	-0.392 v
Voltage Change	-0.017 V	-0.001 v	0	0

BOIT010/007.WP/jai

CATHODIC PROTECTION DESIGN TESTS OF RSWF LINERS AT INEL

BY: GHS DATE: 6/13/89 SHEET 7 OF 8

Cathodic Protection Tests on the 26" RSWF Liners
with Galvanic Anodes Installed

Liner No.	MV	Str/Soil
T-50	0.24	-1092
T-49	0.21	-975
T-48	0.26	-1048
T-47	0.56	-1017
T-46	0.25	-1057
T-45	0.53	-1094
T-44	0.50	-998
T-43	0.34	-1062
T-42	0.44	-989
T-41	0.56	-1019
T-40	0.60	-1070
T-39	0.57	-1052
T-38	0.60	-992
T-37	0.57	-1049
T-36	0.58	-1084
T-35	0.33	-1038
T-34	0.26	-1008
T-33	0.70	-986
T-32	0.69	-1020
T-31	0.47	-990
T-30	0.34	-993

Average current to protect each liner = 45.7 mA

COLD TRAP SHELL

Structure/Soil Potential -1050 millivolts

Anode # 1 0.52 mv
Anode # 2 0.14 mv
Anode # 3 0.29 mv
Anode # 4 0.81 mv
Anode # 5 0.20 mv
Anode # 6 0.81 mv

Total current to protect the cold trap shell = 277 mA

BOIT010/009.WP/jai

CATHODIC PROTECTION DESIGN TESTS OF RSWF LINERS AT INEL

BY: GHS DATE: 6/13/89 SHEET 2 OF 8

Average current required for protection of the coated 26" liners and the average structure-to-soil potential from 1978 to the present is as follows:

Date	Average Current Required For Protection	Average Structure To Soil Potential
1978	14.7 mA	-1272.5 millivolts
1982	30.2 mA	-1108.9 millivolts
1989	45.7 mA	-1030.1 millivolts

Average current required for protection of the coated cold trap shell and the average structure-to-soil potential from 1978 to the present is as follows:

Date	Average Current Required For Protection	Average Structure To Soil Potential
1978	14.7 mA	-970 millivolts
1982	30.2 mA	-978 millivolts
1989	45.7 mA	-1050 millivolts

BOIT010/008.WP/jai

BILL OF MATERIALS AND FIELD DATA

Client: INEL Argonne West
Project: CP RSWF Liners
Project No: BOI27770.A1.03
Location: Idaho Falls, Idaho
Sheet 1 of 2
By: WSS
Date: August 17, 1989
File name: Quanest2.wk1

MATERIAL QUANTITY ESTIMATE
FOR
INSTALLATION OF
CATHODIC PROTECTION SYSTEM
AT
INEL RSWF LINERS
FACILITY 771
SYSTEM MASTER PLAN

No.	ITEM DESCRIPTION	UNIT	ESTIMATED QUANTITY REQUIRED	PLUS CONTING-ENCY	TOTAL QUANTITY ESTIMATED
1	Graphite Anode (3"x 60")	Ea.	250	5	255
2	Graphite Anode (4"x 80")	Ea.	75	2	77
3	Coke Breeze Backfill	Pds.	86,125	8,875	95,000
4	Anode Centalizers	Ea.	325	25	350
5	Reference Electrode	Ea.	6		6
6	Junction Box	Ea.	16		16
7	Pull Box	Ea.	0		0
8	Rectifier (20 volt, 60 amp)	Ea.	8		8
9	Ground Rod	Ea.	8		8
10	Ground Rod Clamp	Ea.	8		8
11	Bare Copper Ground Rod Wire	Ft.	64	16	80
12	Test Station	Ea.	6		6
13	Metal Fence Post	Ea.	0		0
14	No.2 AWG HMWPE Wire	Ft.	120	30	150
15	No.4 AWG HMWPE Wire	Ft.	11,000	1,000	12,000
16	No.8 AWG HMWPE Wire	Ft.	15,540	460	16,000
17	No.10 AWG Wire	Ft.	360	40	400
18	Shunts	Ea.	52	3	55
19	Thermite Weld Connections	Ea.	1,295	305	1,600
20	Conduit 2-inch w/ Fittings	Ft.	150	50	200
21	Conduit 1-inch w/ Fittings	Ft.	100	50	150
22	Compression Connectors	Ea.	1,620	80	1,700
23	Tap Splice Insulating Kit	Ea.	325	25	350
24	In-Line Splice Insulating Kit	Ea.	20		20
25	Multi-Splice Insulating Kit	Ea.	650	50	700
26	High Voltage Rubber Tape	Rolls	10		10
27	Vinyl Electrical Tape	Rolls	10		10
28	Cable Marking Tape	Ft.	5,760	740	6,500
29	Cable Marking Tags	Ea.	52	8	60
30	Cable Warning Signs	Ea.	8	2	10
31	Concrete	Cu.Yd.	11	1	12
32	Welded Wire Fabric	Sq.Ft.	240	10	250
33	Pit Run Gravel	Cu.Yd.	4	1	5

The quantity estimate presented herein is an "order of magnitude" estimate prepared for guidance in project evaluation and implementation from the information available at the time of the estimate. Material estimate assumes cathodic protection system installation for a total of 1295 liners.

Client: INEL Argonne West
Project: CP RSWF Liners
Project No: BOI27770.A1.03
Location: Idaho Falls, Idaho
Sheet 2 of 2
By: WSS
Date: August 21, 1989
File name: Quanest3.wk1

MATERIAL QUANTITY ESTIMATE
FOR
INSTALLATION OF
CATHODIC PROTECTION SYSTEM
AT
INEL RSWF LINERS
FACILITY 771
PHASE 1 INSTALLATION

No.	ITEM DESCRIPTION	UNIT	ESTIMATED QUANTITY REQUIRED	PLUS CONTING-ENCY	TOTAL QUANTITY ESTIMATED
1	Graphite Anode (3"x 60")	Ea.	25	1	26
2	Graphite Anode (4"x 80")	Ea.	25	1	26
3	Coke Breeze Backfill	Pds.	13,500	1,500	15,000
4	Anode Centalizers	Ea.	50	3	53
5	Reference Electrode	Ea.	1		1
6	Junction Box	Ea.	4		4
7	Pull Box	Ea.	4		4
8	Rectifier (20 volt, 60 amp)	Ea.	2		2
9	Ground Rod	Ea.	2		2
10	Ground Rod Clamp	Ea.	2		2
11	Bare Copper Ground Rod Wire	Ft.	16	4	20
12	Test Station	Ea.	1		1
13	Metal Fence Post	Ea.	4		4
14	No.2 AWG HMWPE Wire	Ft.	30	20	50
15	No.4 AWG HMWPE Wire	Ft.	1,700	300	2,000
16	No.8 AWG HMWPE Wire	Ft.	1,200	300	1,500
17	No.10 AWG Wire	Ft.	90	10	100
18	Shunts	Ea.	16	1	17
19	Thermite Weld Connections	Ea.	200	50	250
20	Conduit 2-inch w/ Fittings	Ft.	40	10	50
21	Conduit 1-inch w/ Fittings	Ft.	24	6	30
22	Compression Connectors	Ea.	258	12	270
23	Tap Splice Insulating Kit	Ea.	54	6	60
24	In-Line Splice Insulating Kit	Ea.	4	2	6
25	Multi-Splice Insulating Kit	Ea.	100	10	110
26	High Voltage Rubber Tape	Rolls	3		3
27	Vinyl Electrical Tape	Rolls	3		3
28	Cable Marking Tape	Ft.	1,000	100	1,100
29	Cable Marking Tags	Ea.	4	1	5
30	Cable Warning Signs	Ea.	6	2	8
31	Concrete	Cu.Yd.	3	1	4
32	Welded Wire Fabric	Sq.Ft.	60		60
33	Pit Run Gravel	Cu.Yd.	1		1

The quantity estimate presented herein is an "order of magnitude" estimate prepared for guidance in project evaluation and implementation from the information available at the time of the estimate. Material estimate assumes cathodic protection system installation for a total of 200 liners as Phase 1 construction.

```
*************************************************************
*                                                           *
*      S H A L L O W   S O I L   R E S I S T I V I T Y      *
*                M E A S U R E M E N T S                    *
*                                                           *
*************************************************************

*                                                           *
*                                                           *
*                                                           *
*                                                           *
*   ELECTRICAL RESISTIVITY OF THE SOIL (RESISTANCE-OHMS)    *
*   WAS MEASURED BY THE "WENNER" FOUR PIN METHOD.  AVERAGE  *
*   SOIL RESISTIVITY (OHM-CM) WAS CALCULATED FOR SELECTED   *
*   DEPTHS OF 2.5 FEET, 5.0 FEET, 7.5 FEET, 10.0 FEET, AND  *
*   15.0 FEET, RESPECTIVELY.  LAYER SOIL RESISTIVITY WAS    *
*   CALCULATED USING THE "BARNES" METHOD.                   *
*                                                           *
*                                                           *
*                                                           *
*                                                           *
*************************************************************
```


```
*************************************************************
*                                                           *
*    THIS PROGRAM WAS DEVELOPED BY CH2M HILL. INC.          *
*                                                           *
*    NO WARRANTY, EXPRESS OR IMPLIED, THAT THIS COMPUTER    *
*    PROGRAM, WITHOUT SPECIFIC ADAPTATION TO A PARTICULAR   *
*    PROJECT BY CH2M HILL, WILL BE ANY MORE THAN A GUIDE.   *
*    CH2M HILL ASSUMES NO RESPONSIBILITY FOR ANY ERROR,     *
*    OMISSION, MISREPRESENTATION, OR LOSS RESULTING FROM THE *
*    USE OF THIS PROGRAM.  THE RESULTS OF THIS PROGRAM      *
*    ARE FOR INTERPRETATION BY A PERSON SKILLED AND TRAINED *
*    IN THE PARTICULAR AREA THIS PROGRAM DEALS WITH.        *
*                                                           *
*************************************************************
```


PROGRAM RUN DATE: 08/22/89 PROGRAM RUN TIME: 15:18:31

CLIENT: ARGONNE WEST

SHALLOW SOIL RESISTIVITY TESTS

PROJECT NAME: RADIOACTIVE SCRAP FACILITY

PROJECT NUMBER: B0I27770.A1

TEST NUMBER	TEST LOCATION	DEPTH (FT)	RESISTANCE (OHMS)	AVERAGE RESISTIVITY (OHM-CM)	LAYER RESISTIVITY (OHM-CM)
1.0	2-DD (BASED ON INEL GRID SYSTEM, TYP)	2.5	4.400	2200	2200
		5.0	2.100	2100	2009
		7.5	1.500	2250	2625
		10.0	1.160	2320	2559
		15.0	0.760	2200	2204
2.0	2-MM	2.5	5.900	2950	2950
		5.0	2.500	2500	2169
		7.5	2.100	3150	6563
		10.0	1.300	2600	1786
		15.0	0.970	2910	3821
3.0	2-HH	2.5	4.800	2400	2400
		5.0	2.600	2600	2836
		7.5	1.900	2850	3529
		10.0	1.290	2500	2009
		15.0	0.890	2670	2870
4.0	2-DD	2.5	5.500	2750	2750
		5.0	2.900	2900	3067
		7.5	1.900	2850	2755
		10.0	1.360	2720	2393
		15.0	1.030	3090	4245
5.0	2-X	2.5	5.700	2850	2850
		5.0	2.700	2700	2565
		7.5	1.700	2550	2295
		10.0	1.330	2660	3055
		15.0	0.870	2610	2515
6.0	2-T	2.5	5.500	2750	2750
		5.0	2.400	2400	2129
		7.5	1.600	2400	2400
		10.0	1.170	2340	2177
		15.0	0.820	2460	2741
7.0	2-N	2.5	4.000	2000	2000
		5.0	1.900	1900	1810
		7.5	1.420	2130	2810
		10.0	0.960	1920	1482
		15.0	0.810	2430	5184

NOTES: (1) CORROSIVITY INDEX NOT CALCULATED FOR THIS PRINTOUT

CLIENT: ARGONNE WEST

PROJECT NAME: RADIOACTIVE SCRAP FACILITY

PROJECT NUMBER: BOI27770.A1

SHALLOW SOIL RESISTIVITY TESTS

TEST NUMBER	TEST LOCATION	DEPTH (FT)	RESISTANCE (OHMS)	AVERAGE RESISTIVITY (OHM-CM)	LAYER RESISTIVITY (OHM-CM)
8.0	2-J	2.5	5.900	2950	2950
		5.0	2.800	2800	2665
		7.5	1.800	2700	2520
		10.0	1.200	2560	2215
		15.0	0.870	2610	2716
9.0	2-E	2.5	4.000	2000	2000
		5.0	1.800	1800	1636
		7.5	1.300	1950	2340
		10.0	1.100	2200	3575
		15.0	0.800	2400	2933
10.0	2-C	2.5	5.700	2850	2850
		5.0	2.400	2400	2873
		7.5	1.700	2550	2914
		10.0	1.100	2200	1550
		15.0	0.790	2370	2003
11.0	8-B	2.5	5.500	2750	2750
		5.0	2.700	2700	2652
		7.5	1.700	2550	2295
		10.0	1.160	2320	1826
		15.0	0.790	2370	2477
12.0	8-D	2.5	4.000	2000	2000
		5.0	2.000	2000	2000
		7.5	1.400	2100	2333
		10.0	1.080	2160	2363
		15.0	0.860	2580	4222
13.0	8-H	2.5	4.900	2450	2450
		5.0	1.800	1800	1423
		7.5	1.290	1935	2276
		10.0	1.050	2100	2822
		15.0	1.030	3090	54075
14.0	8-N	2.5	3.900	1950	1950
		5.0	2.100	2100	2275
		7.5	1.600	2400	3360
		10.0	1.100	2200	1760
		15.0	0.810	2430	3072

NOTES: (1) CORROSIVITY INDEX NOT CALCULATED FOR THIS PRINTOUT

CLIENT: ARGONNE WEST

SHALLOW SOIL RESISTIVITY TESTS

PROJECT NAME: RADIOACTIVE SCRAP FACILITY

PROJECT NUMBER: B0I27778.A1

TEST NUMBER	TEST LOCATION	DEPTH (FT)	RESISTANCE (OHMS)	AVERAGE RESISTIVITY (OHM-CM)	LAYER RESISTIVITY (OHM-CM)
15.0	8-T	2.5	4.900	2450	2450
		5.0	2.400	2400	2352
		7.5	1.700	2550	2914
		10.0	1.200	2400	2040
		15.0	0.900	2700	3600
16.0	8-Z	2.5	6.100	3050	3050
		5.0	2.900	2900	2764
		7.5	2.100	3150	3006
		10.0	1.400	2800	2100
		15.0	0.950	2850	2956
17.0	8-FF	2.5	7.400	3700	3700
		5.0	2.800	2800	2252
		7.5	1.800	2700	2520
		10.0	1.440	2800	3600
		15.0	0.990	2970	3160
18.0	8-JJ	2.5	4.400	2200	2200
		5.0	3.200	3200	5067
		7.5	2.400	3600	4000
		10.0	1.600	3200	2400
		15.0	1.010	3030	2739
19.0	8-MM	2.5	3.700	1850	1850
		5.0	2.400	2400	3415
		7.5	1.700	2550	2914
		10.0	1.150	2300	1777
		15.0	0.760	2280	2241
20.0	8-PP	2.5	5.200	2600	2600
		5.0	2.300	2300	2062
		7.5	1.500	2250	2156
		10.0	1.000	2000	1500
		15.0	0.670	2010	2030
21.0	13-B	2.5	4.600	2300	2300
		5.0	2.200	2200	2100
		7.5	1.600	2400	2933
		10.0	1.200	2400	2400
		15.0	0.860	2580	3035

NOTES: (1) CORROSIVITY INDEX NOT CALCULATED FOR THIS PRINTOUT

CLIENT: ARGONNE WEST

PROJECT NAME: RADIOACTIVE SCRAP FACILITY

PROJECT NUMBER: B0127770.A1

SHALLOW SOIL RESISTIVITY TESTS

TEST NUMBER	TEST LOCATION	DEPTH (FT)	RESISTANCE (OHMS)	AVERAGE RESISTIVITY (OHM-CM)	LAYER RESISTIVITY (OHM-CM)
29.0	13-MM	2.5	3.300	1650	1650
		5.0	1.700	1700	1753
		7.5	1.250	1875	2361
		10.0	0.930	1860	1816
		15.0	0.640	1920	2052
30.0	13-PP	2.5	5.100	2550	2550
		5.0	2.600	2600	2652
		7.5	1.700	2550	2456
		10.0	1.300	2600	2763
		15.0	0.730	2190	1665
31.0	19-B	2.5	5.400	2700	2700
		5.0	2.600	2600	2507
		7.5	1.900	2850	3529
		10.0	1.270	2540	1915
		15.0	0.840	2520	2481
32.0	19-D	2.5	4.300	2150	2150
		5.0	1.500	1500	1152
		7.5	1.140	1710	2375
		10.0	1.030	2060	5337
		15.0	0.730	2190	2506
33.0	19-H	2.5	4.300	2150	2150
		5.0	2.200	2200	2252
		7.5	1.600	2400	2933
		10.0	1.100	2200	1760
		15.0	0.710	2130	2003
34.0	19-N	2.5	5.300	2650	2650
		5.0	2.400	2400	2193
		7.5	1.600	2400	2400
		10.0	1.200	2400	2400
		15.0	0.800	2400	2400
35.0	19-T	2.5	6.400	3200	3200
		5.0	3.100	3100	3006
		7.5	2.000	3000	2810
		10.0	1.400	2800	2333
		15.0	0.910	2730	2600

NOTES: (1) CORROSIVITY INDEX NOT CALCULATED FOR THIS PRINTOUT

CLIENT: ARGONNE WEST

SHALLOW SOIL RESISTIVITY TESTS

PROJECT NAME: RADIOACTIVE SCRAP FACILITY

PROJECT NUMBER: BOI27778.A1

TEST NUMBER	TEST LOCATION	DEPTH (FT)	RESISTANCE (OHMS)	AVERAGE RESISTIVITY (OHM-CM)	LAYER RESISTIVITY (OHM-CM)
36.0	19-Z	2.5	4.900	2450	2450
		5.0	2.700	2700	3087
		7.5	1.800	2700	2700
		10.0	1.400	2800	3150
		15.0	0.950	2850	2956
37.0	19-FF	2.5	6.800	3400	3400
		5.0	3.300	3300	3206
		7.5	2.000	3000	2538
		10.0	1.400	2800	2333
		15.0	0.910	2730	2600
38.0	19-JJ	2.5	5.500	2750	2750
		5.0	3.300	3300	4125
		7.5	2.300	3450	3795
		10.0	1.600	3200	2629
		15.0	0.990	2970	2597
39.0	19-MM	2.5	4.400	2200	2200
		5.0	2.200	2200	2200
		7.5	1.400	2100	1925
		10.0	1.100	2200	2567
		15.0	0.800	2400	2933
40.0	19-PP	2.5	4.500	2250	2250
		5.0	2.500	2500	2812
		7.5	1.900	2850	3950
		10.0	1.340	2680	2273
		15.0	0.760	2280	1756
41.0	24-B	2.5	4.700	2350	2350
		5.0	2.300	2300	2252
		7.5	1.600	2400	2629
		10.0	1.200	2400	2400
		15.0	0.900	2700	3600
42.0	24-D	2.5	4.400	2200	2200
		5.0	2.400	2400	2640
		7.5	1.800	2700	3600
		10.0	1.300	2600	2340
		15.0	0.910	2730	3033

NOTES: (1) CORROSIVITY INDEX NOT CALCULATED FOR THIS PRINTOUT

CLIENT: ARGONNE WEST

SHALLOW SOIL RESISTIVITY TESTS

PROJECT NAME: RADIOACTIVE SCRAP FACILITY

PROJECT NUMBER: B0I27778.A1

TEST NUMBER	TEST LOCATION	DEPTH (FT)	RESISTANCE (OHMS)	AVERAGE RESISTIVITY (OHM-CM)	LAYER RESISTIVITY (OHM-CM)
43.0	24-H	2.5	4.400	2200	2200
		5.0	2.300	2300	2410
		7.5	1.600	2400	2629
		10.0	1.100	2200	1760
		15.0	0.810	2430	3072
44.0	24-N	2.5	4.700	2350	2350
		5.0	2.200	2200	2068
		7.5	1.600	2400	2933
		10.0	1.200	2400	2400
		15.0	0.830	2490	2692
45.0	24-T	2.5	7.400	3700	3700
		5.0	3.600	3600	3585
		7.5	2.300	3450	3185
		10.0	1.500	3000	2156
		15.0	0.910	2730	2314
46.0	24-Z	2.5	4.300	2150	2150
		5.0	2.500	2500	2986
		7.5	2.000	3000	5000
		10.0	1.500	3000	3000
		15.0	1.100	3300	4125
47.0	24-FF	2.5	5.000	2500	2500
		5.0	2.400	2400	2300
		7.5	1.700	2550	2914
		10.0	1.300	2600	2763
		15.0	0.900	2700	2925
48.0	24-JJ	2.5	5.500	2750	2750
		5.0	2.000	2000	2852
		7.5	1.900	2850	2956
		10.0	1.500	3000	3562
		15.0	0.870	2610	2071
49.0	24-MM	2.5	6.100	3050	3050
		5.0	2.000	2000	2500
		7.5	1.700	2550	2164
		10.0	1.300	2600	2763
		15.0	0.800	2400	2000

NOTES: (1) CORROSIVITY INDEX NOT CALCULATED FOR THIS PRINTOUT

CLIENT: ARGONNE WEST

SHALLOW SOIL RESISTIVITY TESTS

PROJECT NAME: RADIOACTIVE SCRAP FACILITY

PROJECT NUMBER: B0I27770.A1

TEST NUMBER	TEST LOCATION	DEPTH (FT)	RESISTANCE (OHMS)	AVERAGE RESISTIVITY (OHM-CM)	LAYER RESISTIVITY (OHM-CM)
50.0	24-PP	2.5	5.000	2500	2500
		5.0	2.600	2600	2700
		7.5	1.900	2850	3529
		10.0	1.300	2600	2050
		15.0	0.860	2500	2541
51.0	29-B	2.5	3.900	1950	1950
		5.0	1.700	1700	1587
		7.5	1.200	1800	2040
		10.0	0.970	1940	2530
		15.0	0.750	2250	3307
52.0	29-E	2.5	4.000	2000	2000
		5.0	2.100	2100	2211
		7.5	1.400	2100	2100
		10.0	0.960	1920	1527
		15.0	0.760	2280	3640
53.0	29-H	2.5	3.700	1850	1850
		5.0	1.900	1900	1953
		7.5	1.400	2100	2660
		10.0	0.990	1980	1690
		15.0	0.830	2490	5136
54.0	29-N	2.5	3.800	1900	1900
		5.0	2.000	2000	2111
		7.5	1.600	2400	4000
		10.0	1.100	2200	1760
		15.0	0.820	2460	3221
55.0	29-T	2.5	4.700	2350	2350
		5.0	2.300	2300	2252
		7.5	1.800	2700	4140
		10.0	1.400	2800	3150
		15.0	0.870	2610	2290
56.0	29-Z	2.5	4.200	2100	2100
		5.0	2.400	2400	2800
		7.5	1.800	2700	3600
		10.0	1.400	2800	3150
		15.0	1.100	3300	5133

NOTES: (1) CORROSIVITY INDEX NOT CALCULATED FOR THIS PRINTOUT

CLIENT: ARGONNE WEST

SHALLOW SOIL RESISTIVITY TESTS

PROJECT NAME: RADIOACTIVE SCRAP FACILITY

PROJECT NUMBER: BOI27778.A1

TEST NUMBER	TEST LOCATION	DEPTH (FT)	RESISTANCE (OHMS)	AVERAGE RESISTIVITY (OHM-CM)	LAYER RESISTIVITY (OHM-CM)
57.0	29-FF	2.5	4.500	2250	2250
		5.0	2.200	2200	2152
		7.5	1.600	2400	2933
		10.0	1.300	2600	3467
		15.0	0.950	2850	3529
58.0	29-JJ	2.5	5.100	2550	2550
		5.0	2.900	2900	3361
		7.5	2.100	3150	3806
		10.0	1.300	2600	1706
		15.0	0.900	2700	2925
59.0	29-MM	2.5	5.100	2550	2550
		5.0	2.400	2400	2267
		7.5	1.700	2550	2914
		10.0	1.100	2200	1558
		15.0	0.810	2430	3072
60.0	29-PP	2.5	6.100	3050	3050
		5.0	2.600	2600	2266
		7.5	1.800	2700	2925
		10.0	1.100	2200	1414
		15.0	0.850	2550	3748
61.0	34-B	2.5	3.700	1850	1850
		5.0	2.000	2000	2176
		7.5	1.400	2100	2333
		10.0	1.100	2200	2567
		15.0	0.720	2160	2004
62.0	34-E	2.5	4.100	2050	2050
		5.0	1.800	1800	1684
		7.5	1.100	1650	1414
		10.0	0.950	1900	3403
		15.0	0.640	1920	1961
63.0	34-H	2.5	4.200	2100	2100
		5.0	2.300	2300	2542
		7.5	1.500	2250	2156
		10.0	1.200	2560	4364
		15.0	0.740	2220	1754

NOTES: (1) CORROSIVITY INDEX NOT CALCULATED FOR THIS PRINTOUT

CLIENT: ARGONNE WEST

SHALLOW SOIL RESISTIVITY TESTS

PROJECT NAME: RADIOACTIVE SCRAP FACILITY

PROJECT NUMBER: B0I27778.A1

TEST NUMBER	TEST LOCATION	DEPTH (FT)	RESISTANCE (OHMS)	AVERAGE RESISTIVITY (OHM-CM)	LAYER RESISTIVITY (OHM-CM)
64.0	34-N	2.5	3.300	1650	1650
		5.0	2.100	2100	2800
		7.5	1.600	2400	3360
		10.0	1.200	2400	2400
		15.0	0.810	2430	2492
65.0	34-T	2.5	5.800	2900	2900
		5.0	2.700	2700	2526
		7.5	1.800	2700	2700
		10.0	1.400	2800	3150
		15.0	0.840	2520	2100
66.0	34-Z	2.5	4.800	2400	2400
		5.0	2.500	2500	2609
		7.5	1.700	2550	2656
		10.0	1.500	3000	6375
		15.0	0.960	2800	2667
67.0	34-HH	2.5	4.600	2300	2300
		5.0	2.600	2600	2990
		7.5	1.900	2850	3529
		10.0	1.400	2800	2660
		15.0	0.910	2730	2600
68.0	34-LL	2.5	4.400	2200	2200
		5.0	2.300	2300	2410
		7.5	1.600	2400	2629
		10.0	1.200	2400	2400
		15.0	0.900	2700	3600
69.0	34-NN	2.5	4.600	2300	2300
		5.0	2.400	2400	2509
		7.5	1.600	2400	2400
		10.0	1.200	2400	2400
		15.0	0.700	2100	1680
70.0	34-PP	2.5	4.400	2200	2200
		5.0	2.200	2200	2200
		7.5	1.600	2400	2933
		10.0	1.100	2200	1760
		15.0	0.700	2100	1925

NOTES: (1) CORROSIVITY INDEX NOT CALCULATED FOR THIS PRINTOUT

CLIENT: ARGONNE WEST

SHALLOW SOIL RESISTIVITY TESTS

PROJECT NAME: RADIOACTIVE SCRAP FACILITY

PROJECT NUMBER: BOI27770.A1

TEST NUMBER	TEST LOCATION	DEPTH (FT)	RESISTANCE (OHMS)	AVERAGE RESISTIVITY (OHM-CM)	LAYER RESISTIVITY (OHM-CM)
71.0	39-B	2.5	4.900	2450	2450
		5.0	2.400	2400	2352
		7.5	1.600	2400	2400
		10.0	1.300	2600	3467
		15.0	0.750	2250	1773
72.0	39-E	2.5	4.800	2400	2400
		5.0	2.000	2000	1714
		7.5	1.300	1950	1857
		10.0	0.920	1840	1574
		15.0	0.650	1950	2215
73.0	39-H	2.5	5.700	2850	2850
		5.0	2.600	2600	2390
		7.5	1.600	2400	2000
		10.0	1.200	2400	2400
		15.0	1.130	3390	19371
74.0	39-N	2.5	4.500	2250	2250
		5.0	2.200	2200	2152
		7.5	1.500	2250	2357
		10.0	1.100	2200	2062
		15.0	0.770	2310	2567
75.0	39-T	2.5	5.400	2700	2700
		5.0	2.900	2900	3132
		7.5	1.900	2850	2755
		10.0	1.300	2600	2050
		15.0	0.850	2550	2456
76.0	39-Z	2.5	4.500	2250	2250
		5.0	2.600	2600	3079
		7.5	1.800	2700	2925
		10.0	1.300	2600	2340
		15.0	0.870	2610	2630
77.0	39-HH	2.5	4.000	2000	2000
		5.0	2.200	2200	2444
		7.5	1.600	2400	2933
		10.0	1.200	2400	2400
		15.0	0.850	2550	2914

NOTES: (1) CORROSIVITY INDEX NOT CALCULATED FOR THIS PRINTOUT

CLIENT: ARGONNE WEST

SHALLOW SOIL RESISTIVITY TESTS

PROJECT NAME: RADIOACTIVE SCRAP FACILITY

PROJECT NUMBER: BOI2777B.A1

TEST NUMBER	TEST LOCATION	DEPTH (FT)	RESISTANCE (OHMS)	AVERAGE RESISTIVITY (OHM-CM)	LAYER RESISTIVITY (OHM-CM)
78.0	39-LL	2.5	4.300	2150	2150
		5.0	2.500	2500	2986
		7.5	1.700	2550	2656
		10.0	1.200	2400	2040
		15.0	0.800	2400	2400
79.0	39-NN	2.5	4.600	2300	2300
		5.0	2.700	2700	3268
		7.5	1.500	2250	1680
		10.0	1.200	2400	3000
		15.0	0.680	2040	1569
80.0	39-PP	2.5	5.000	2900	2900
		5.0	2.900	2900	2900
		7.5	1.200	1800	1024
		10.0	1.300	2600	<note 2>
		15.0	0.780	2340	1950
81.0	44-C	2.5	4.700	2350	2350
		5.0	2.000	2000	1741
		7.5	1.500	2250	3000
		10.0	1.110	2220	2135
		15.0	0.750	2250	2312
82.0	44-E	2.5	4.400	2200	2200
		5.0	2.000	2000	1833
		7.5	1.300	1950	1857
		10.0	0.910	1820	1517
		15.0	0.610	1830	1850
83.0	44-H	2.5	4.400	2200	2200
		5.0	2.100	2100	2009
		7.5	1.400	2100	2100
		10.0	0.990	1980	1690
		15.0	0.690	2070	2277
84.0	44-N	2.5	4.500	2250	2250
		5.0	2.200	2200	2152
		7.5	1.400	2100	1925
		10.0	1.100	2200	2567
		15.0	0.730	2190	2170

NOTES: (1) CORROSIVITY INDEX NOT CALCULATED FOR THIS PRINTOUT

(2) THIS LAYER RESISTIVITY CANNOT BE CALCULATED BY THE BARNES METHOD

CLIENT: ARGONNE WEST

SHALLOW SOIL RESISTIVITY TESTS

PROJECT NAME: RADIOACTIVE SCRAP FACILITY

PROJECT NUMBER: B0I27770.A1

TEST NUMBER	TEST LOCATION	DEPTH (FT)	RESISTANCE (OHMS)	AVERAGE RESISTIVITY (OHM-CM)	LAYER RESISTIVITY (OHM-CM)
85.0	44-T	2.5	6.000	3000	3000
		5.0	3.000	3000	3000
		7.5	1.800	2700	2250
		10.0	1.300	2600	2340
		15.0	0.810	2430	2149
86.0	44-Z	2.5	4.300	2150	2150
		5.0	2.100	2100	2052
		7.5	1.700	2550	4462
		10.0	1.100	2200	1550
		15.0	0.720	2160	2004
87.0	44-HH	2.5	4.400	2200	2200
		5.0	2.100	2100	2009
		7.5	1.500	2250	2625
		10.0	1.100	2206	2062
		15.0	0.750	2250	2357
88.0	44-LL	2.5	3.900	1950	1950
		5.0	2.100	2100	2275
		7.5	1.600	2400	3360
		10.0	1.100	2200	1760
		15.0	0.610	1830	1369
89.0	44-NN	2.5	5.400	2700	2700
		5.0	2.000	2000	1500
		7.5	1.500	2250	3000
		10.0	0.960	1920	1333
		15.0	0.720	2160	2000
90.0	44-PP	2.5	5.100	2550	2550
		5.0	2.700	2700	2869
		7.5	1.800	2700	2700
		10.0	1.300	2600	2340
		15.0	0.840	2520	2374

NOTES: (1) CORROSIVITY INDEX NOT CALCULATED FOR THIS PRINTOUT

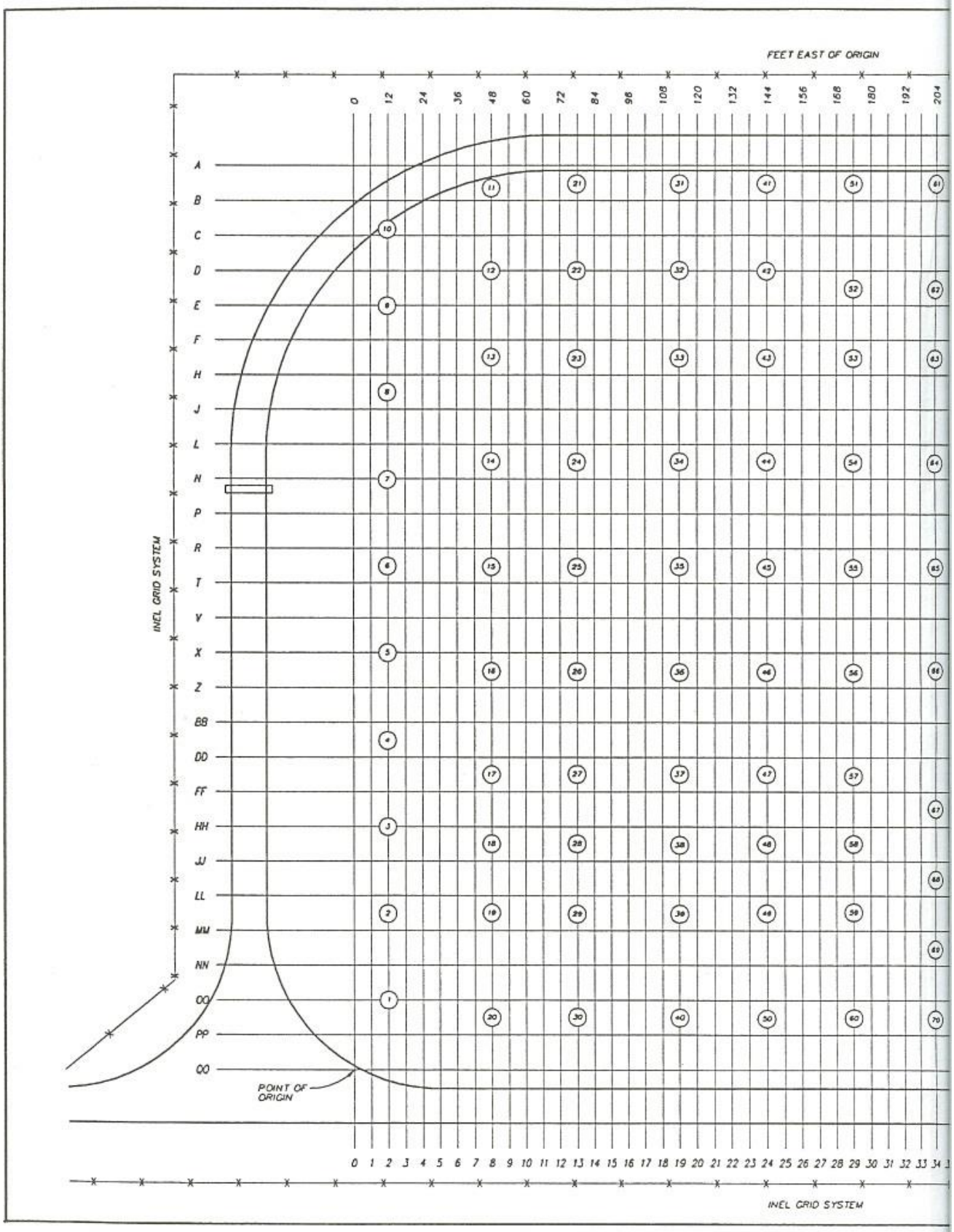
FEET EAST OF ORIGIN
0 12 24 36 48 60 72 84 96 108 120 132 144 156 168 180 192 204
A B C D E F H J L N P R T V X Z BB DD FF HH JJ LL MM NN OO PP QQ
INEL GRID SYSTEM
POINT OF ORIGIN
0 1 2 3 4 5 6 7 8 9 10 11 12 13 14 15 16 17 18 19 20 21 22 23 24 25 26 27 28 29 30 31 32 33 34
INEL GRID SYSTEM

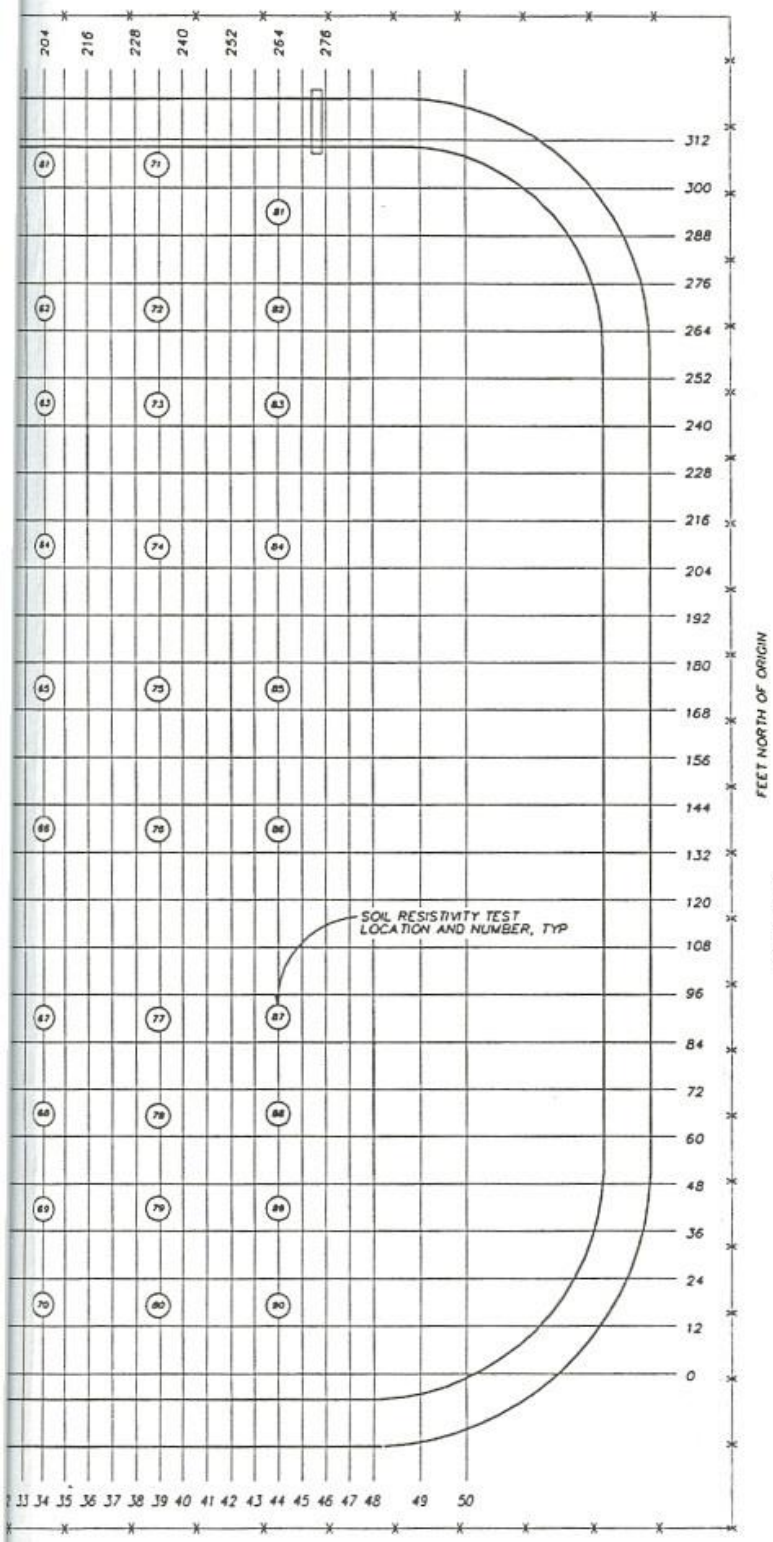

NOT TO SCALE

NOTES:

1. GRID BASED ON X, Y COORDINATE SYSTEM FROM ARGONNE NATIONAL LABORATORY DRAWING IPE-771-3.
2. SOIL RESISTIVITY TEST NUMBERS CORRELATE TO TEST NUMBERS ON DATA SHEETS.
3. SOIL RESISTIVITY TESTS TAKEN BY CH2M HILL IN JUNE OF 1989.

FIGURE 1

SOIL RESISTIVITY TEST LOCATION MAP

FACILITY 771
ARGONNE NATIONAL LABORATORY - WEST
IDAHO FALLS, IDAHO

CH2M HILL

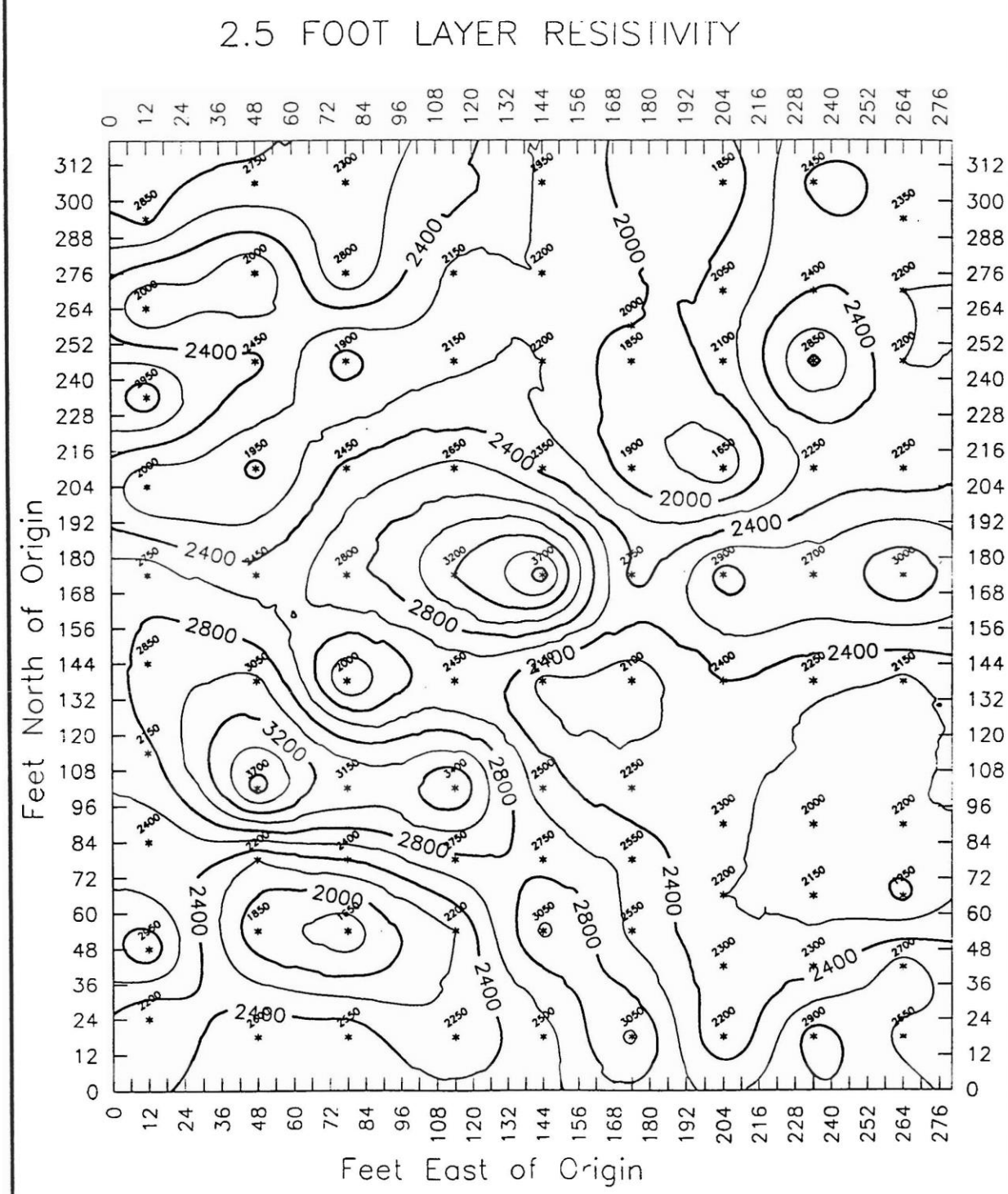

Figure 2
SOIL RESISTIVITY CONTOURS (ohm-cm)
ARGONNE NATIONAL LABORATORY - WEST
IDAHO FALLS, IDAHO

B27770

CH2M HILL

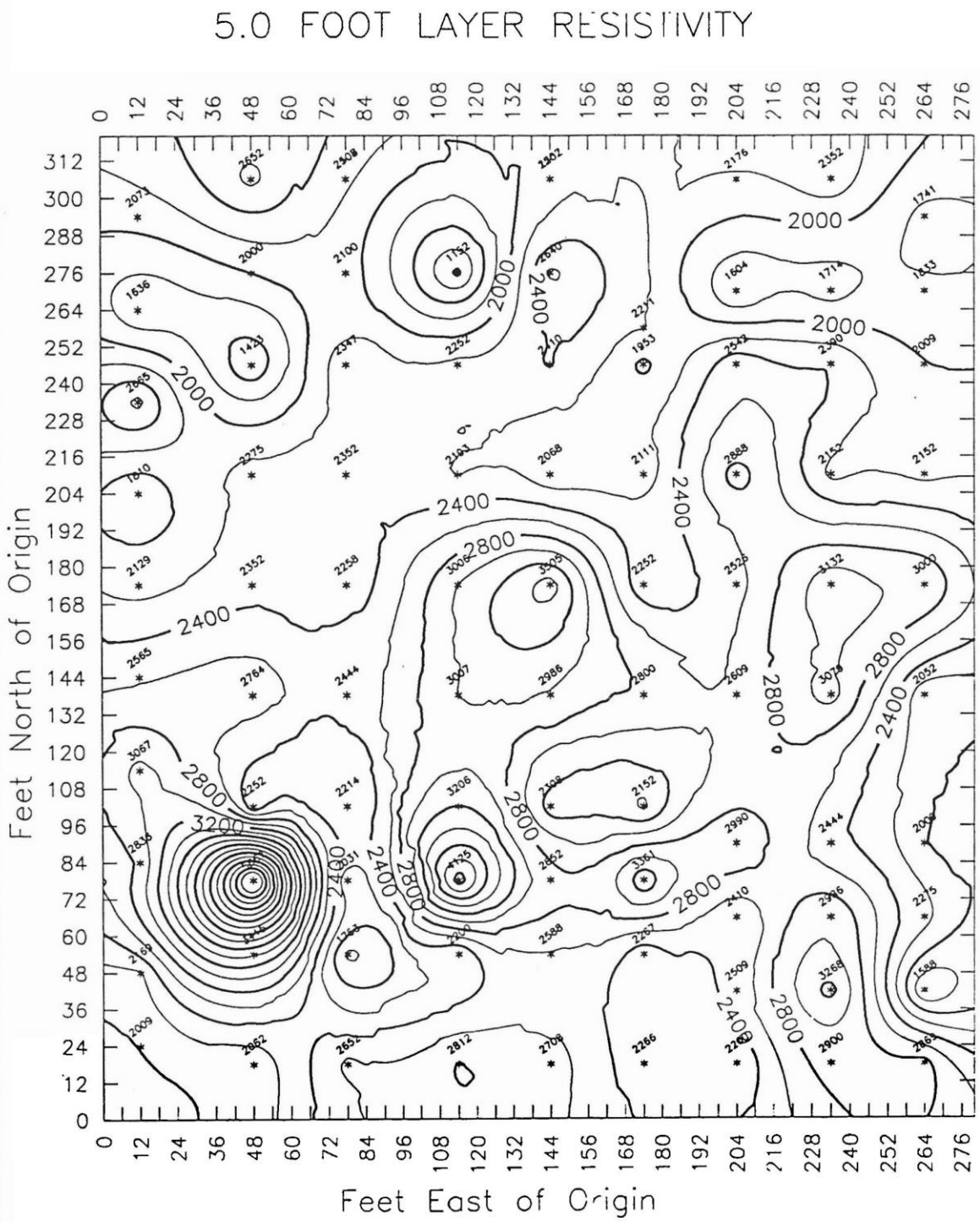

Figure 3
SOIL RESISTIVITY CONTOURS (ohm-cm)
ARGONNE NATIONAL LABORATORY - WEST
IDAHO FALLS, IDAHO

B27770

CH2M HILL

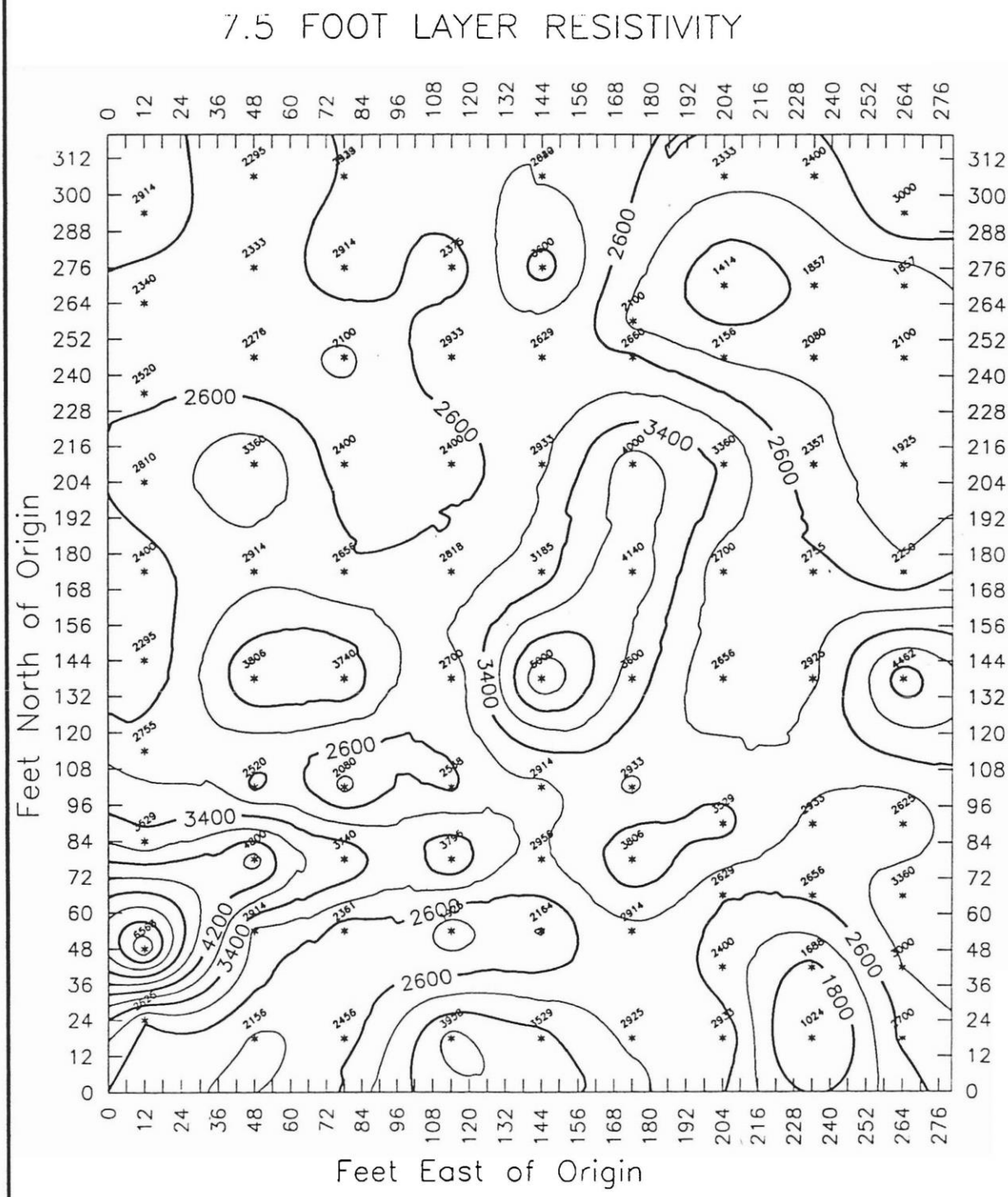

Figure 4
SOIL RESISTIVITY CONTOURS (ohm-cm)
ARGONNE NATIONAL LABORATORY - WEST
IDAHO FALLS, IDAHO

B27770

CH2M HILL

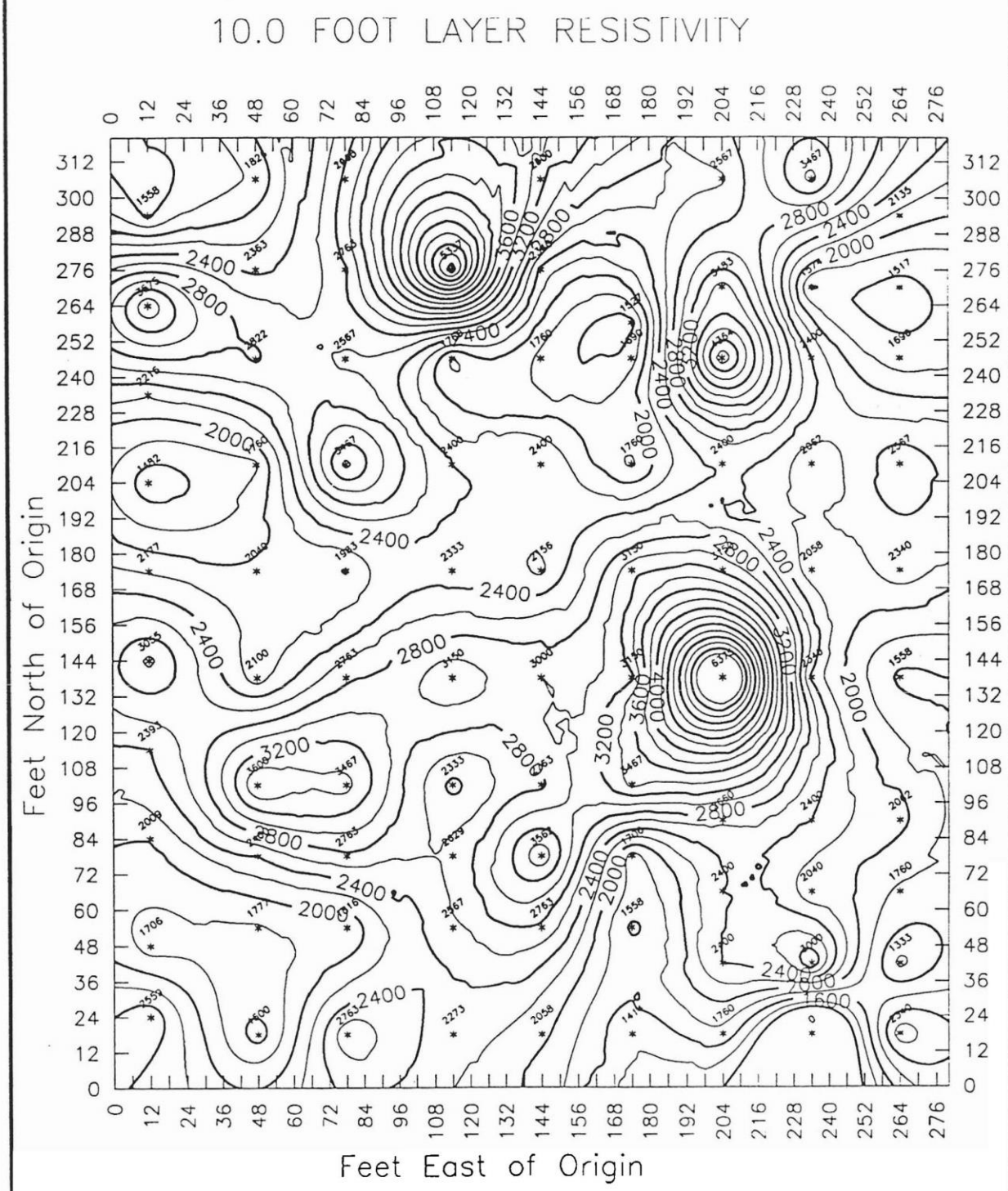

Figure 5
SOIL RESISTIVITY CONTOURS (ohm-cm)
ARGONNE NATIONAL LABORATORY - WEST
IDAHO FALLS, IDAHO

B27770

CH2M HILL

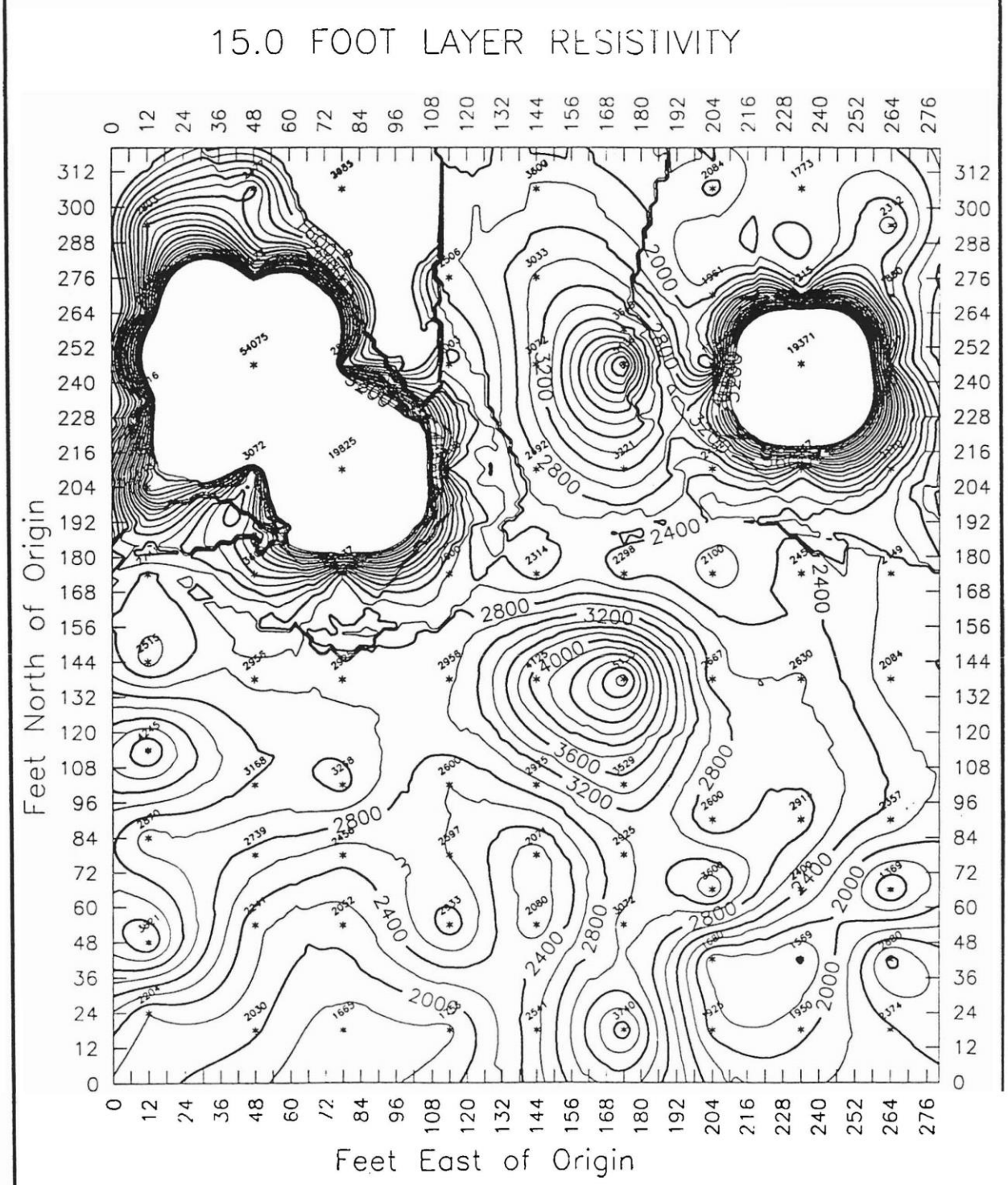

Figure 6
SOIL RESISTIVITY CONTOURS (ohm-cm)
ARGONNE NATIONAL LABORATORY - WEST
IDAHO FALLS, IDAHO

B27770

CH2M HILL

Attachment D-30

Drawing of RSWF Drainage System and
Assessment of Saturated Soil Conditions on the RSWF Cathodic Protection System (Example)

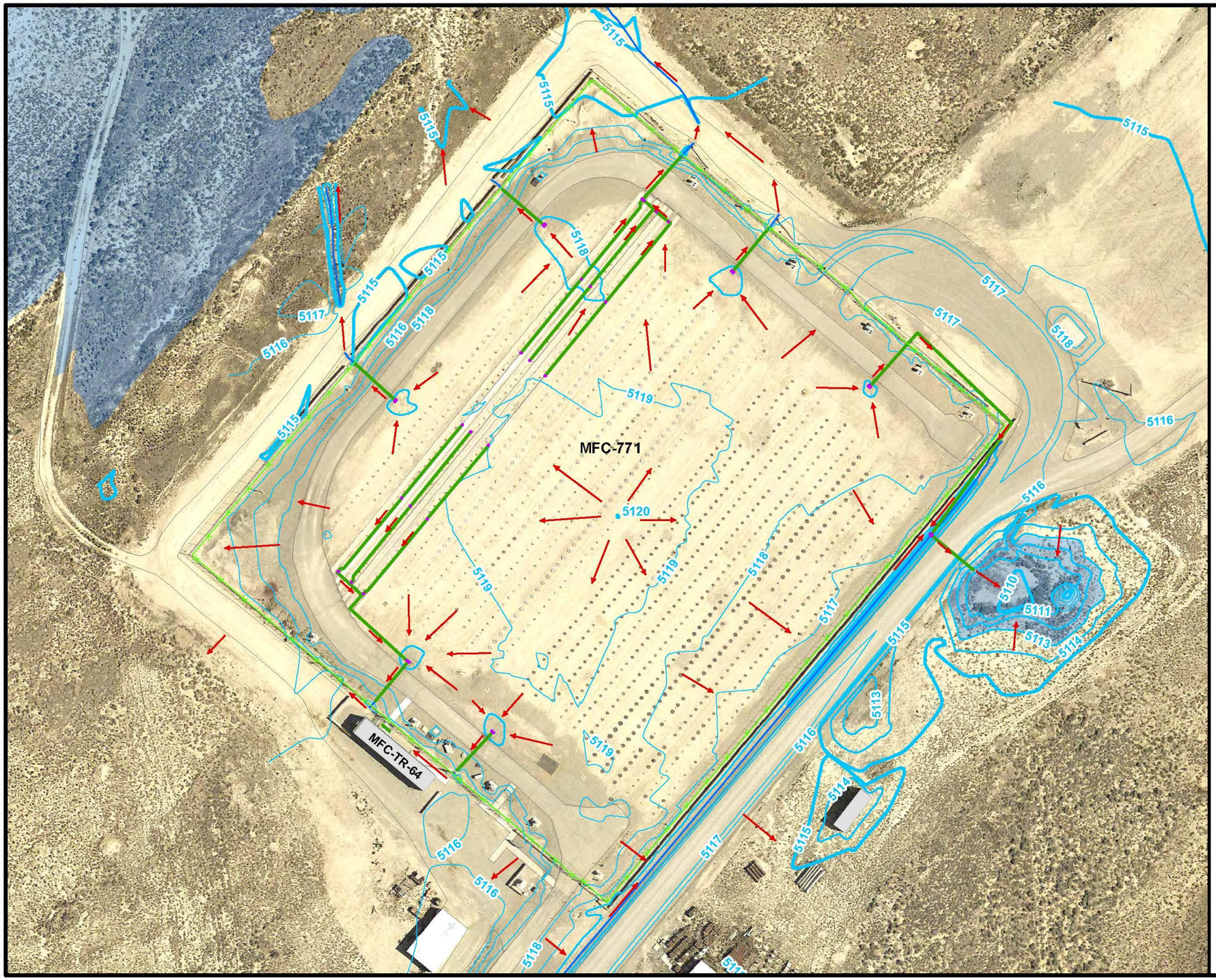

RSWF
Stormwater Drainage

Legend

- 1-ft interval contour
- 1-ft interval depression contour
- 5-ft index contour
- 5-ft index depression contour
- Flowpath
- Catch basin
- Drain pipe / culvert
- Ditch
- Stormwater runoff pond
- Building
- Road
- Fence
- Jersey barrier

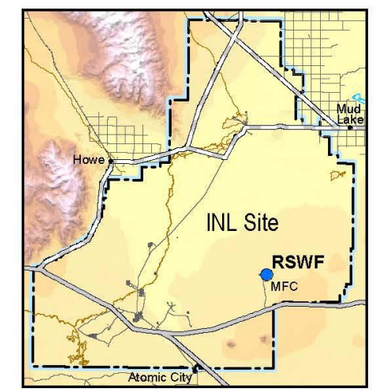

Vicinity Map

NORTH

0 5 10 20 30 40 50 Meters

0 15 30 60 90 120 150 180 Feet

NOTE: elevations based on MFC site specific vertical datum.

GIS Analyst: Dan Mahnami
Date Drawn: 3/18/2015
Path: X:\gis_projects\anl\Permit_Maps\RSWF_Area
File Name: RSWF_Area_Stormwater_Runoff-bl_v1.mxd

February 24, 2015

Northwest Corrosion Engineering

10995 Warfield Road, Sedro-Woolley, WA 98284
Phone: (360) 826-4570 Fax: (360) 826-6321

Mr. Thomas Hipp, P.E.
Battelle Energy Alliance
Idaho National Laboratory
Materials and Fuels Complex

SUBJECT: Impact of Saturated Soil Conditions on the Cathodic Protection System of the Radioactive Scrap and Waste Facility

Mr. Hipp,

Northwest Corrosion Engineering was asked to provide an assessment as to what effect saturated soil conditions and possible pooling of water adjacent to the steel liners will have on the operation of the cathodic protection system at the Materials and Fuels Complex. This assessment addresses the requirements of SOW-12070, 'Evaluate Impact of Saturated Soil Conditions on the Cathodic Protection System of the Radioactive Scrap and Waste Facility'.

BACKGROUND

The Materials and Fuels Complex of the Idaho National Laboratory includes a Radioactive Scrap and Waste Facility (RSWF) that provides interim storage for spent fuel and remote-handled mixed and radioactive waste. The waste materials are housed in steel containers, which are placed into individual carbon steel liners. The steel liners are inserted vertically into the ground at varying depths. All liners are connected to an impressed current cathodic protection system that provides corrosion protection current to the liners' external surfaces.

EFFECTS OF SATURATED SOIL CONDITIONS

The proper operation of a cathodic protection system requires both electronic and ionic current transfer. Electron flow from the anode to the cathode is completed through the metallic path connecting the two materials. Concurrent oxidation and reduction reactions provide for ionic current exchange between the anode and cathode through the electrolyte. An electrolyte is any media that supports this ionic current exchange. The relative ease by which ion transfer occurs is due to the resistivity of the electrolyte surrounding, and between, the anode and cathode (steel liner) materials.

Saturating the soil environment will put more ions into solution enhancing ionic current exchange and increase the effectiveness of the impressed current cathodic protection system. Additionally, pooling of water at the surface of the liners will also provide for the transfer of cathodic protection current to the exposed steel.

Because cathodic protection requires a continuous electrolyte, any moisture on the surface of the steel that is not in contact with surface water or soil will support general surface corrosion at that site. However, the corrosion rates at these sites will be on the order of 1 – 2 mils per year (1-

inch = 1,000 mils) which is acceptable from a corrosion control standpoint. This minor surface corrosion can be likened to any metal object that is subjected to condensation or moisture (such as dew).

I have made multiple visits to the RSWF and have inspected the steel liner storage site on several occasions. My inspections have been completed when the soil conditions were both dry and saturated and I am satisfied that during times of soil saturation, the operation of the sites cathodic protection system is improved and is not compromised.

Sincerely
Northwest Corrosion Engineering

Jeremy A. Hailey, P.E.
NACE Corrosion Specialist, No. 5401

PROFESSIONAL ENGINEER
REGISTERED
10856
STATE OF IDAHO
JEREMY A. HAILEY
2/24/2015

Attachment D-31

Drawing of Liner Configuration (Example)

REVISIONS		
REV	DESCRIPTION	EFFECTIVE DATE
10	REMOVED PREVIOUS REVISION HISTORY. CHANGED ANL WEST FORMAT TO INL FORMAT. REVISED TITLE. AS-BUILT AS OF 8/12/2008, SEE ECR-562482	8/13/2008
11	AS-BUILT AS OF 10/01/2010, SEE ECR 576118	10/07/2010
12	AS BUILT AS OF 08/04/2011, SEE ECR 595881	08/30/2011
13	AS-BUILT AS OF 2/2/15, SEE ECR-628817	2/16/15
14	AS-BUILT AS OF 3/2/16, SEE ECR-639058	7/1[illegible]/2016
15	SEE ECR-645057	10/26/16
16	TITLE CHANGE, SEE ECR-650435	11/16/2017
17	SEE ECR-656908	3/14/2018

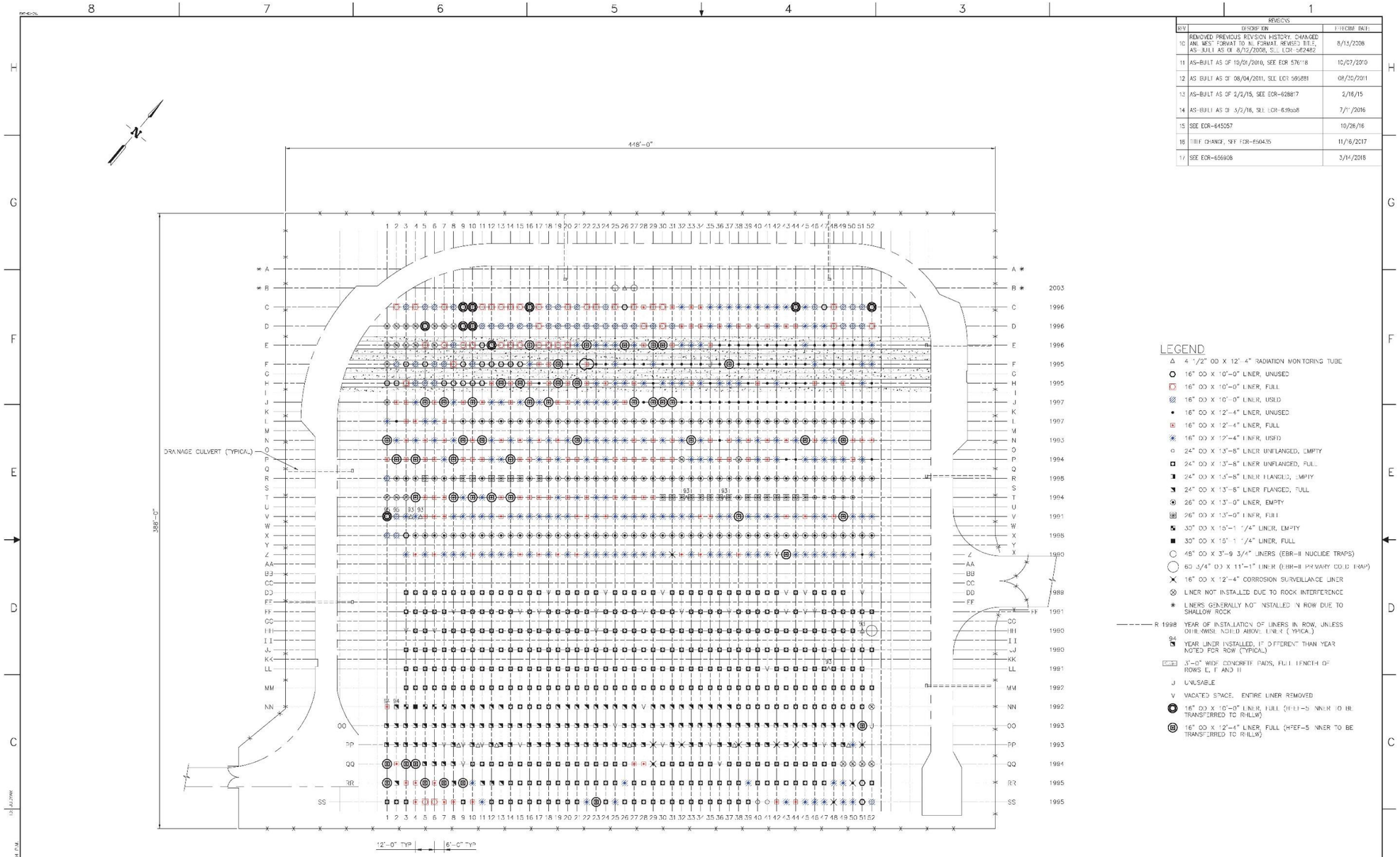

RADIOACTIVE SCRAP AND WASTE FACILITY (RSWF) PLAN

SCALE: 1" = 20.0'

REQUESTOR: D. ERICKSON	INL Idaho National Laboratory
INST ENGR: TOM ZAIBI	MFC-771
DESIGN: TOM ZAIBI	RADIOACTIVE SCRAP & WASTE FACILITY (RSWF)
DRAWN: S.L. FAULKER	LINER CONFIGURATION
PROJECT NO.: N/A	
SPEC COD.:	
FOR REVIEW/APPROVAL SIGNATURES SEE FOR NO.: N/A	
EFFECTIVE DATE: 5/25/93	

REV	DWG CODE	DATE ISSUED	DWG NO.	REV
E	01M13	7/5 07/15/05	747635	17

SCALE: NONE SHEET 1 OF 1

W7710-0301-EE

Attachment D-32

Drawings of Liner Types (Example)

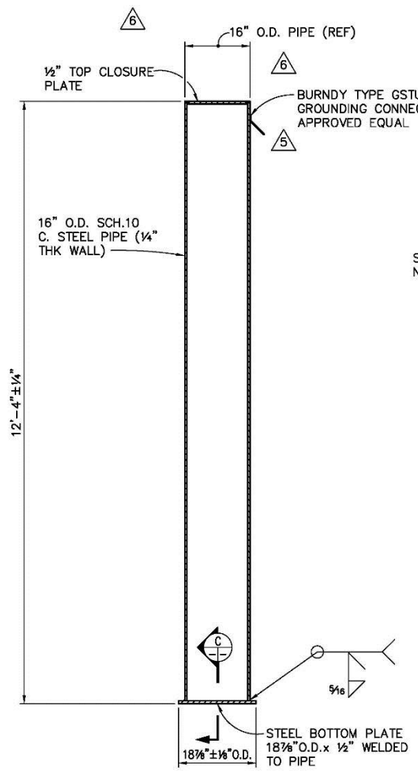

SECTION A

SCALE: 3/4"=1'-0"

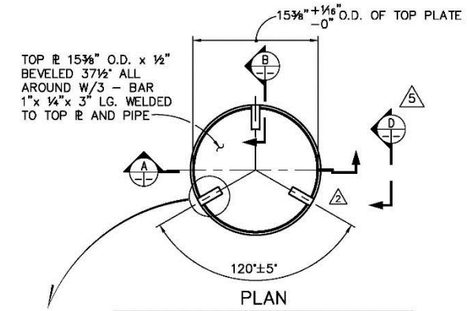

PLAN

SCALE: 1-1/2"=1'-0"

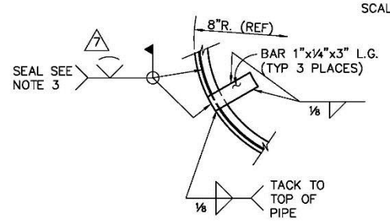

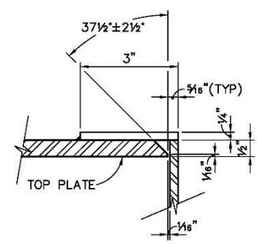

SECTION B

SCALE: 1/2"=1"

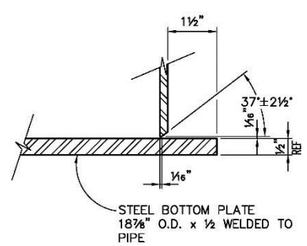

SECTION C

SCALE: 1/2"=1"

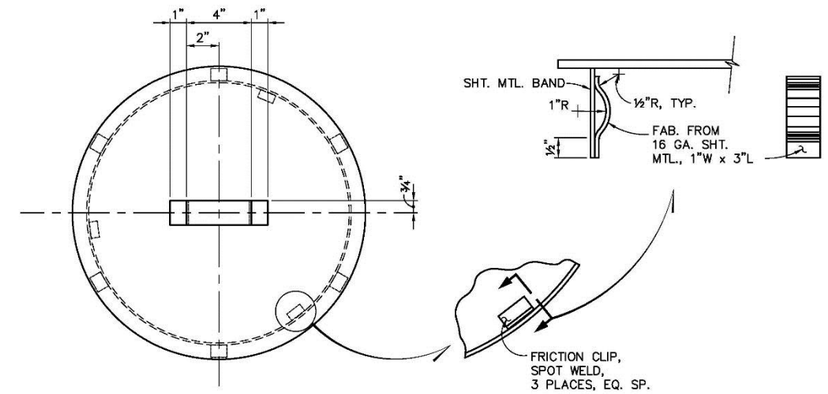

PLAN

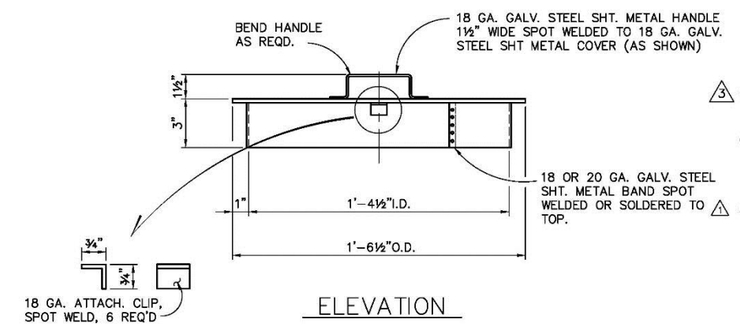

ELEVATION

DUST COVER DETAIL (1)

NOT TO SCALE

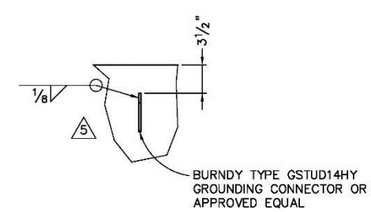

SECTION D

SCALE: 1-1/2"=1"

NOTES

(3) 7. SEE DRAWING W7710-0280 FOR INSTALLATION DETAIL

6. ONE CIRCUMFERENTIAL WELD IS PERMITTED TO JOIN TWO PIECES OF PIPE. WELD SHALL BE FULL PENETRATION WITH 1/16" REINF. MAINTAIN PIPE AXIS WITHIN 0.005".

(1) 5. CONDUCT A HYDROSTATIC LEAK TEST OF THE PIPE AND LOWER CLOSURE PLATE ASSEMBLY BY INSTALLING A TEMPORARY SEAL PLUG IN THE UPPER END OF THE PIPE AND APPLYING 15 PSIG FOR 15 MINUTES IN ACCORDANCE WITH ANL-W DOCUMENT NO. W7710-0296-ES. THERE SHALL BE NO LEAKAGE INDICATED BY A VISUAL EXAMINATION OF THE LINER.

(5) 4. MATERIAL FOR TOP AND BOTTOM CLOSURE PLATES SHALL BE CARBON STEEL PER ASTM A-36

3. SEAL WELD TOP PLATE AFTER INSTALLATION OF LINER IN RSWF AND LOADING OF CONTENTS.

(5) (6) 2. MATERIAL FOR LINER SHALL BE 16"ø SCHEDULE 10 CARBON STEEL PIPE PER ASTM A-53 TYPE E GRADE A OR B, API-5L GRADE X42 OR X60, OR APPROVED EQUAL.

(7) 1. ALL WELDING SHALL BE PER THE INL WELDING MANUAL WPS C6.1 (FCAW) C6.8 (GMAW-P) OR C3.0 ROOT AND FINAL PASSES OF WELDS SHALL BE VISUALLY INSPECTED FOR NO CRACKS THOROUGH FUSION AND UNDERSIZED WELDS.

MICRO-FILMED DATE	SYM	APPR'D	CHANGE	BY	CHK'D	DATE
	7		SEE ECR 559351.	MW		4/4/06
	6	BGH	PER DCN # W7710-065	SLP	BGH	3/31/97
	5	BGH	PER DCN # W7710-060	SLP	BGH	9/15/96
	4	BGH	PER DCN # W7710-055	SLP	BGH	2/2/96
	3	BGH	PER DCN # W7710-054	SLP	BGH	12/5/95
	2	BGH	PER DCN # W7710-047	GMH	BGH	4/94
	1	BGH	PER DCN # W7710-034	JMH	BGH	9/91

INDEX CODE NUMBER

AREA	TYPE	CL	ORIG	SERIAL
273	077	147	052	747632

AUTO-CAD GENERATED DRAWING

FILE : 0291D001.DWG

PLOT SCALE: 1=16 FOR 34 x 22 INCH PLOT

EDIT DATE: 04/02/97

DRAWING CONSISTING OF 1 SHEETS

APPR'D	DATE	APPR'D	DATE
L.E.HAMBERLIN	3/14/90		
L.C.WITBECK	3/14/90		
B.A.KIENLEN	3/14/90		

DRAWN BY	DATE	SERVICE REQUEST
P.HUNTER	2/16/90	D6300/WP1412/WP1422

CHECKED		PROJECT ENGINEER	DATE
R. BROOKSHIER	3/14/90		
RESP. ENGINEER		APPR'D/RELEASED	
R. BROOKSHIER	3/14/90	R. BLACK	3/15/90

MATERIAL

PART NO	NEXT ASSEMBLY	REQ'D

THIS DRAWING IS THE PROPERTY OF
ARGONNE NATIONAL LABORATORY

03/27/91

RSWF

16" O.D. X 12'-4" STORAGE LINER

PLAN, SECTIONS & DETAILS

ARGONNE WEST — INEL.

SHEET	DRAWING NUMBER	REV.
1 OF 1	W7710-0291-ED-07	

Date: 04/16/10 – 10:37 AM Layout Name: Model

File: 747632.dwg (Path: X:\)

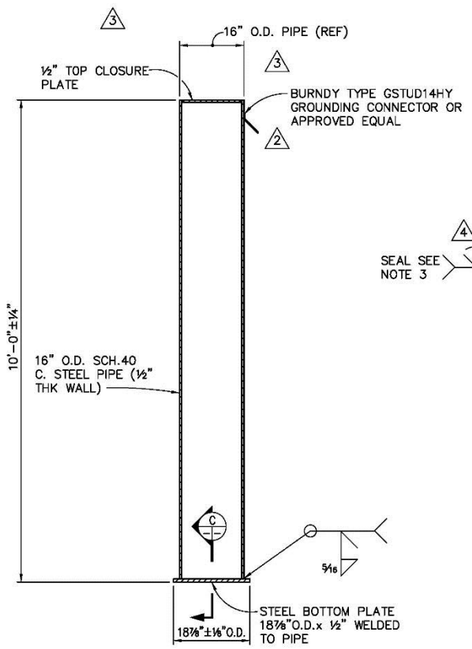

SECTION A

SCALE: 3/4"=1'-0"

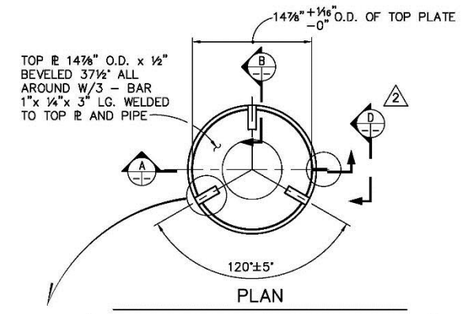

PLAN

SCALE: 1-1/2"=1'-0"

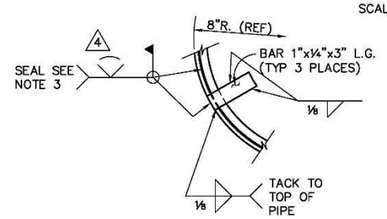

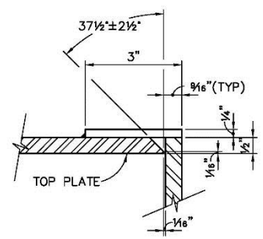

SECTION B

SCALE: 1/2"=1"

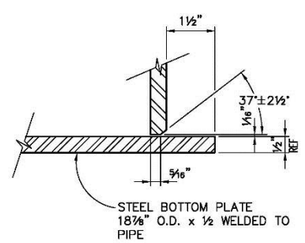

SECTION C

SCALE: 1/2"=1"

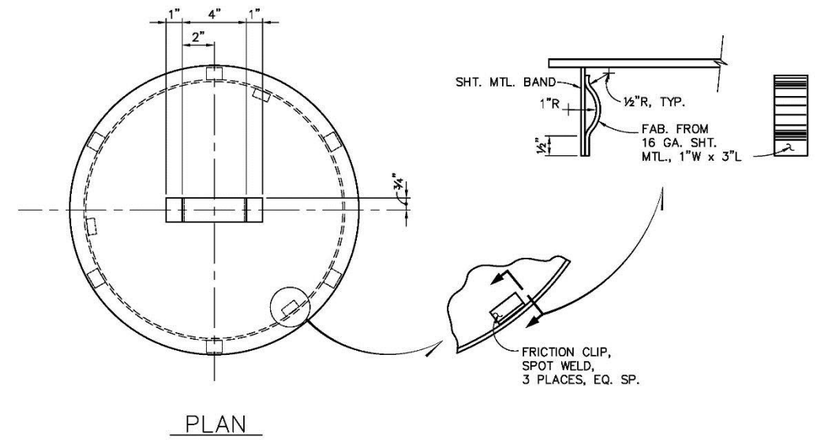

PLAN

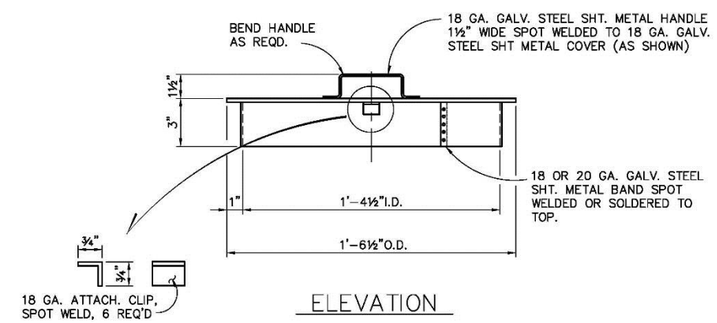

ELEVATION

DUST COVER DETAIL 1

NOT TO SCALE

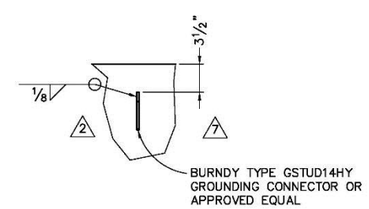

SECTION D

SCALE: 1-1/2"=1"

7. SEE DRAWING W7710-0280 FOR INSTALLATION DETAIL

6. ONE CIRCUMFERENTIAL WELD IS PERMITTED TO JOIN TWO PIECES OF PIPE. WELD SHALL BE FULL PENETRATION WITH 1/16" REINF. MAINTAIN PIPE AXIS WITHIN 0.005".

5. CONDUCT A HYDROSTATIC LEAK TEST OF THE PIPE AND LOWER CLOSURE PLATE ASSEMBLY BY INSTALLING A TEMPORARY SEAL PLUG IN THE UPPER END OF THE PIPE AND APPLYING 15 PSIG FOR 15 MINUTES IN ACCORDANCE WITH ANL-W DOCUMENT NO. W7710-0296-ES. THERE SHALL BE NO LEAKAGE INDICATED BY A VISUAL EXAMINATION OF THE LINER.

2 4. MATERIAL FOR TOP AND BOTTOM CLOSURE PLATES SHALL BE CARBON STEEL PER ASTM A-36

3. SEAL WELD TOP PLATE AFTER INSTALLATION OF LINER IN RSWF AND LOADING OF CONTENTS.

2 2. MATERIAL FOR LINER SHALL BE 16"ø SCHEDULE 40 CARBON STEEL PIPE PER ASTM A-53 TYPE E GRADE A OR B, API-5L GRADE X42 OR X60, OR APPROVED EQUAL.

4 1. ALL WELDING SHALL BE PER THE INL WELDING MANUAL WPS C6.1 (FCAW) C6.8 (GMAW-P) OR C3.0 ROOT AND FINAL PASSES OF WELDS SHALL BE VISUALLY INSPECTED FOR NO CRACKS THOROUGH FUSION AND UNDERSIZED WELDS.

NOTES

SYM	APPR'D	CHANGE	BY	CHK'D	DATE
4		SEE ECR 559351.	MW		4/24/98
03	BGH	DCN W7710-065	S.L.P.	BGH	3/24/97
02	BGH	DCN W7710-060	S.L.P.	BGH	4/03/96
01	G.H.	DCN W7710-057	S.L.P.	G.H.	8/14/95

MICRO-FILMED DATE

INDEX CODE NUMBER

AREA	TYPE	CL	ORIG	SERIAL
273	077	147	052	747681

AUTO-CAD GENERATED DRAWING

FILE : 030BD001.DWG

PLOT SCALE: 1=16 FOR 34 x 22 INCH PLOT

EDIT DATE: 04/02/97

DRAWING CONSISTING OF 1 SHEETS

APPR'D	DATE	APPR'D	DATE
TOM ZAHN	2/6/95		
LARSON E. HAMBERLIN	2/7/95		
D.L. NIELSEN	2/20/95		

DRAWN BY	DATE	SERVICE REQUEST	
S.L. PALMER	1/25/95	E6408-00/976436-58	
CHECKED		PROJECT ENGINEER	DATE
B.G. HARRIS	2/6/95	B.G. HARRIS	2/6/95
RESP. ENGINEER		APPR'D/RELEASED	
B.G. HARRIS	2/6/95	B.G. HARRIS	2/22/95

MATERIAL

PART NO	NEXT ASSEMBLY	REQ'D

THIS DRAWING IS THE PROPERTY OF
ARGONNE NATIONAL LABORATORY

TITLE
RSWF
16" O.D. X 10'-0" STORAGE LINER

PLAN, SECTIONS & DETAILS

ARGONNE WEST — I.N.E.L.

SHEET 1 OF 1 — DRAWING NUMBER W7710-0308-ED-04 — REV. 1

File: 747681.dwg Path: X:\ Date: 04/16/10 – 10:38 AM Layout Name: Model

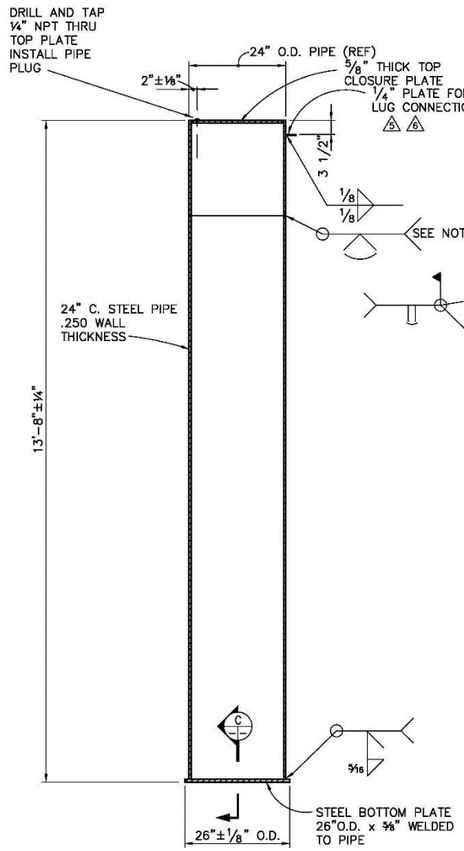

SECTION A

SCALE: 3/4"=1'-0"

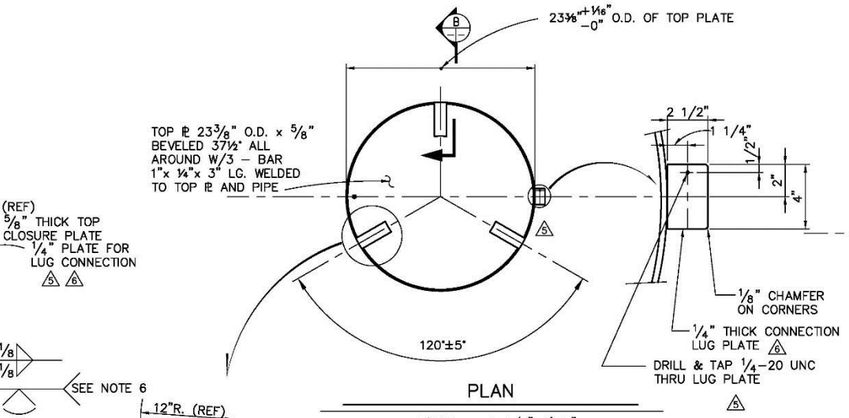

PLAN

SCALE: 1-1/2"=1'-0"

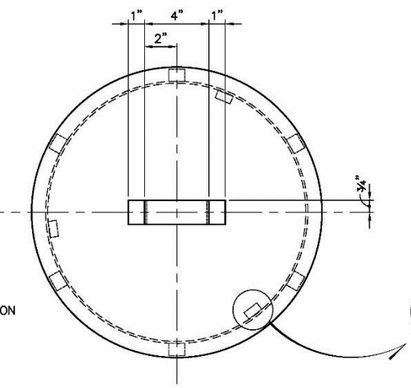

PLAN

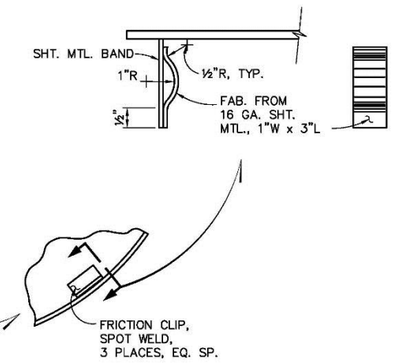

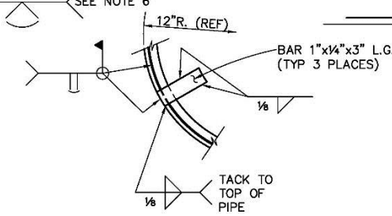

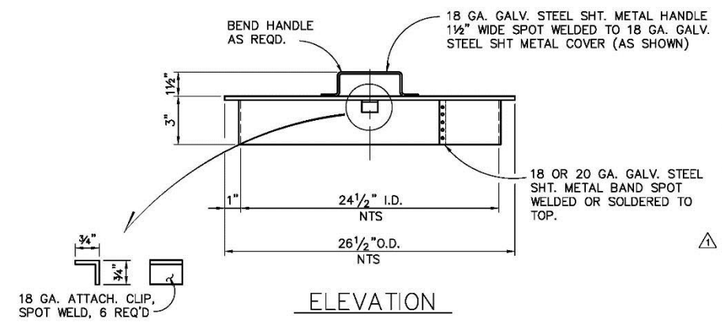

ELEVATION

DUST COVER DETAIL (1)

NOT TO SCALE

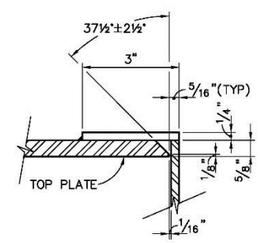

SECTION B

SCALE: 1/2"=1"

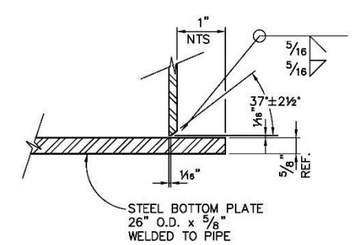

SECTION C

SCALE: 1/2"=1"

7. SEE DRAWING W7710-0280-ED FOR INSTALLATION REQUIREMENTS.

6. ONE CIRCUMFERENTIAL WELD IS PERMITTED TO JOIN TWO PIECES OF PIPE. WELD SHALL BE FULL PENETRATION WITH 1/16" REINF. MAINTAIN PIPE AXIS WITHIN 0.005".

(1) 5. CONDUCT A HYDROSTATIC LEAK TEST OF THE PIPE AND LOWER CLOSURE PLATE ASSEMBLY BY INSTALLING A TEMPORARY SEAL PLUG IN THE UPPER END OF THE PIPE AND APPLYING 15 PSIG FOR 15 MINUTES IN ACCORDANCE WITH ANL-W DOCUMENT NO. W7710-0296-ES. THERE SHALL BE NO LEAKAGE INDICATED BY A VISUAL EXAMINATION OF THE LINER.

4. MAKE TOP AND BOTTOM CLOSURE PLATES FROM CARBON STEEL PER ASTM A-36

3. SEAL WELD TOP PLATE AFTER INSTALLATION OF LINER IN RSWF AND LOADING OF CONTENTS.

2. MAKE LINER FROM 24" SCHEDULE 10 CARBON STEEL PIPE PER ASTM A-53 TYPE E GRADE A OR B, OR APPROVED EQUAL.

1. ALL WELDING SHALL BE PER THE INEL WELDING MANUAL WPS C6.1 (FCAW) OR C6.8 (GMAW-P) ROOT AND FINAL PASSES OF WELDS SHALL BE VISUALLY INSPECTED PER ANSI. B31.1 PARAGRAPH 136.4.2.

NOTES

(5) **REVISED AND REDRAWN**

SYM	APPR'D	CHANGE	BY	CHK'D	DATE
6	BGH	PER DCN # W7710-055	SLP	BGH	2/2/95
5	BGH	PER DCN # W7710-048	GH	BGH	4/94
4	BGH	PER DCN # W7710-035	MM	BGH	
3		PER DCN # W7710-032	JH	JDL	5/91
2	RLB	PER DCN # W7710-025	PH	RB	3/90
1		PER DCN # W7710-022	JPF	LAB	8/89

MICRO-FILMED DATE

AUTO-CAD GENERATED DRAWING
FILE : 0277D001.DWG
PLOT SCALE: 1=16 FOR 34 x 22 INCH PLOT
EDIT DATE: 02/06/95

DRAWING CONSISTING OF 1 SHEETS

APPR'D	DATE	APPR'D	DATE
L.E.HAMBERLIN	2/15/89		
L.C.WITBECK	2/15/89		
B.A.KIENLEN	2/15/89		

DRAWN BY J. LEWIS	DATE 1/89	SERVICE REQUEST C6589	
CHECKED R. BROOKSHIER	1 89	PROJECT ENGINEER	DATE
RESP. ENGINEER R. BROOKSHIER	1 89	APPR'D/RELEASED R.P. HEARN	2/16 89
MATERIAL			

PART NO	NEXT ASSEMBLY	REQ'D

THIS DRAWING IS THE PROPERTY OF
ARGONNE NATIONAL LABORATORY

02/27/91

RSWF

OVERSIZE STORAGE LINER

PLAN, SECTIONS & DETAILS

ARGONNE WEST — INEL

SHEET 1 OF 1 — DRAWING NUMBER W7710-0277-ED-06 — REV.

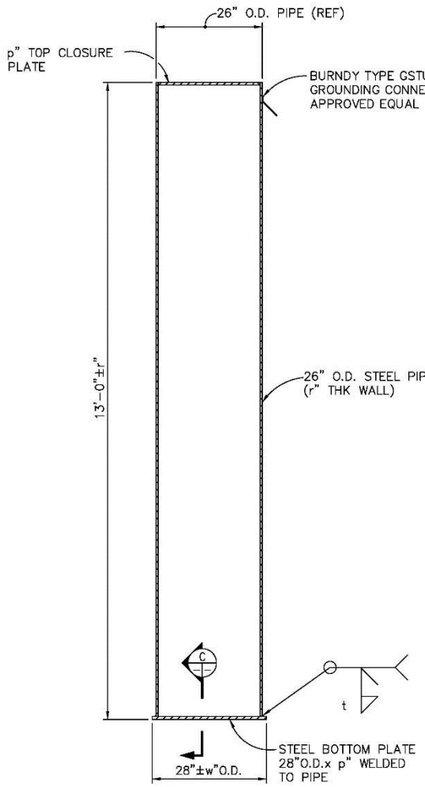

SECTION (A)
SCALE: 3/4"=1'-0"

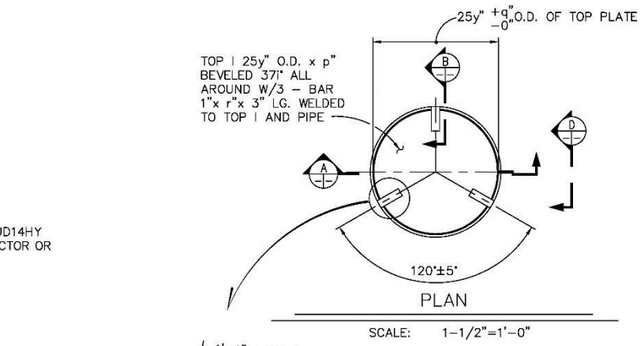

PLAN
SCALE: 1-1/2"=1'-0"

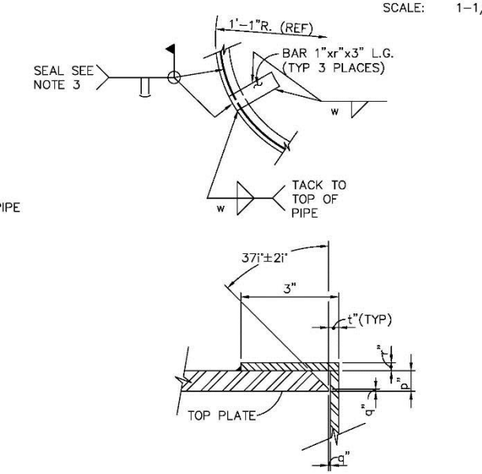

SECTION (B)
SCALE: 1/2"=1"

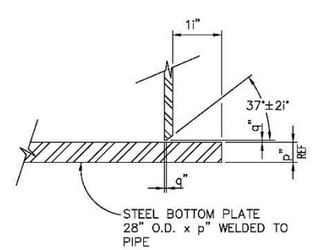

SECTION (C)
SCALE: 1/2"=1"

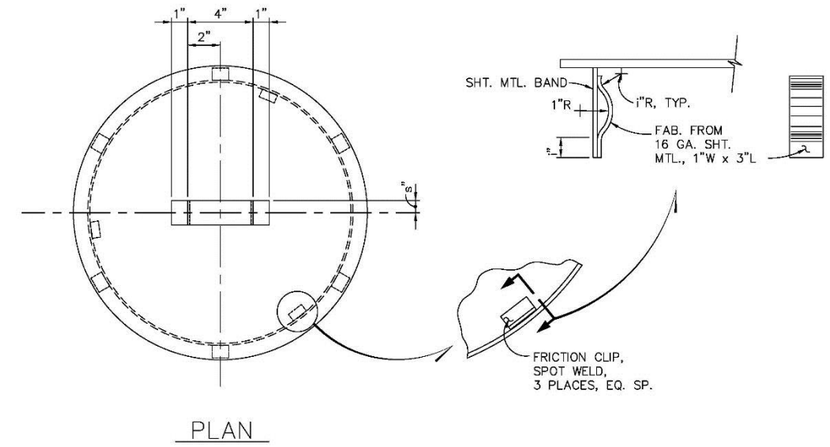

PLAN

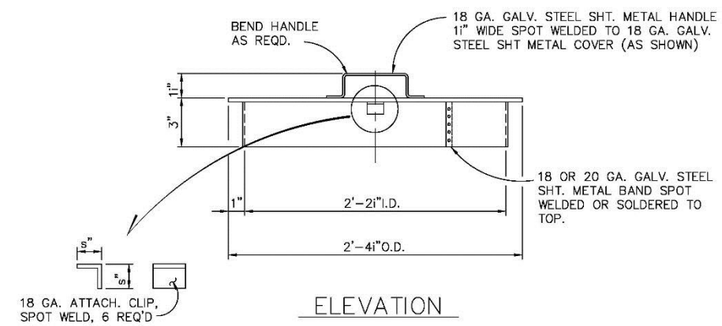

ELEVATION

DUST COVER DETAIL (1)
NOT TO SCALE

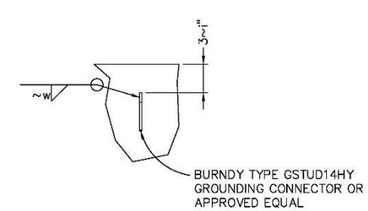

SECTION (D)
SCALE: 1-1/2"=1"

NOTES

7. SEE DRAWING W7710-0280 FOR INSTALLATION DETAIL
6. ONE CIRCUMFERENTIAL WELD IS PERMITTED TO JOIN TWO PIECES OF PIPE. WELD SHALL BE FULL PENETRATION WITH q" REINF. MAINTAIN PIPE AXIS WITHIN 0.005".
5. CONDUCT A HYDROSTATIC LEAK TEST OF THE PIPE AND LOWER CLOSURE PLATE ASSEMBLY BY INSTALLING A TEMPORARY SEAL PLUG IN THE UPPER END OF THE PIPE AND APPLYING 15 PSIG FOR 15 MINUTES IN ACCORDANCE WITH ANL-W DOCUMENT NO. W7710-0296-ES. THERE SHALL BE NO LEAKAGE INDICATED BY A VISUAL EXAMINATION OF THE LINER.
4. MATERIAL FOR TOP AND BOTTOM CLOSURE PLATES SHALL BE CARBON STEEL PER ASTM A-36
3. SEAL WELD TOP PLATE AFTER INSTALLATION OF LINER IN RSWF AND LOADING OF CONTENTS.
2. MATERIAL FOR LINER SHALL BE 26"ø X r" WALL THICKNESS CARBON STEEL PIPE PER ASTM A-53 TYPE E GRADE A OR B, API-5L GRADE X42 OR X60, OR APPROVED EQUAL.
1. ALL WELDING SHALL BE PER THE INEL WELDING MANUAL WPS C6.1 (FCAW) OR C6.8 (GMAW-P) ROOT AND FINAL PASSES OF WELDS SHALL BE VISUALLY INSPECTED PER ANSI. B31.1 PARAGRAPH 136.4.2.

NOTES

SYM	APPR'D	CHANGE	BY	CHK'D	DATE

MICRO-FILMED DATE

AUTO-CAD GENERATED DRAWING
FILE: 0311D001.DWG
PLOT SCALE: 1=16 FOR 34 x 22 INCH PLOT
EDIT DATE: 04/02/97

DRAWING CONSISTING OF 1 SHEETS

APPR'D	DATE	APPR'D	DATE
TOM ZAHN	4/2/97		
LARSON E. HAMBERLIN	4/2/97		
D.L. NIELSON	4/2/97		

DRAWN BY	DATE	SERVICE REQUEST
S.L. PALMER	3/26/97	976436-58

CHECKED		PROJECT ENGINEER	DATE
B.G. HARRIS	4/2 97	B.G. HARRIS	4/2 97
RESP. ENGINEER		APPR'D/RELEASED	
B.G. HARRIS	4/2 97	B.G. HARRIS	4/2 97

MATERIAL

PART NO	NEXT ASSEMBLY	REQ'D

THIS DRAWING IS THE PROPERTY OF
ARGONNE NATIONAL LABORATORY

06/27/91

RSWF

26" O.D. X 13'-0"
STORAGE LINER

PLAN, SECTIONS & DETAILS

ARGONNE WEST — INEL

SHEET	DRAWING NUMBER	REV.
1 OF 1	W7710-0311-ED-00	

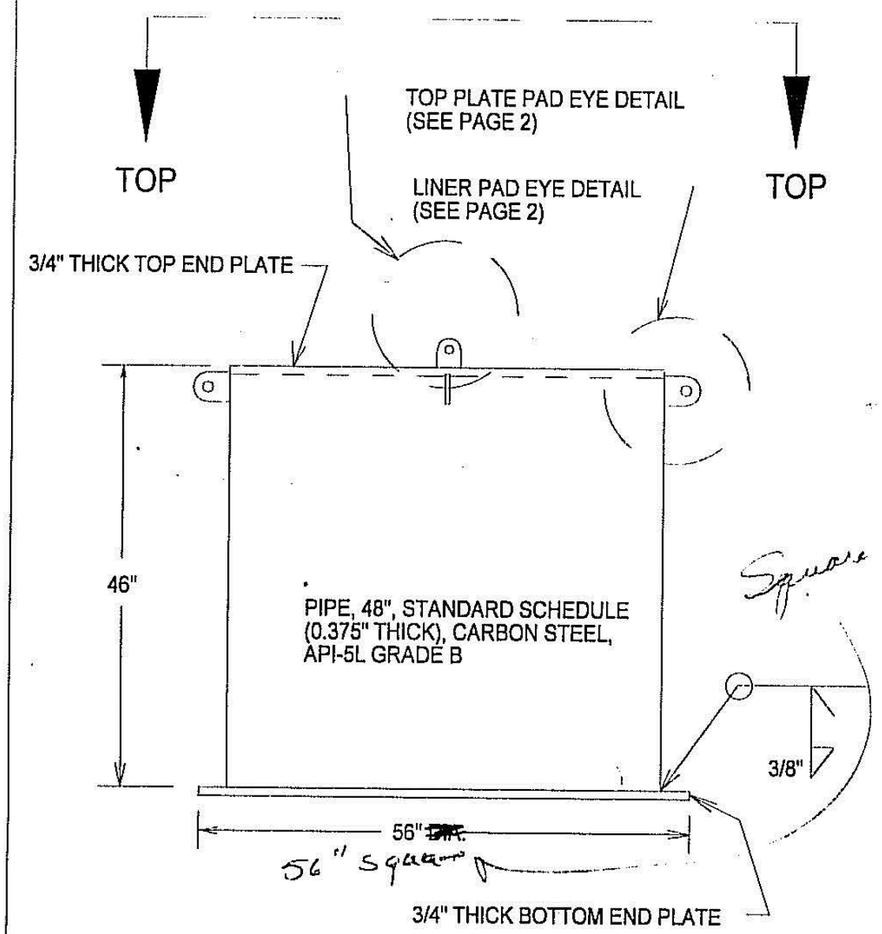

SIDE VIEW

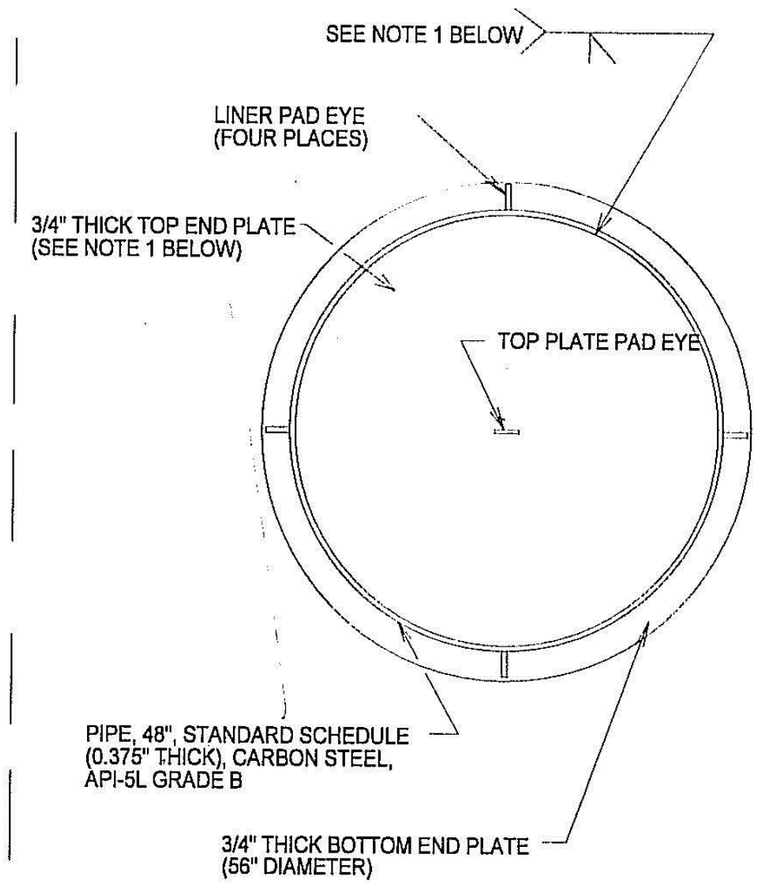

TOP VIEW

NOTES:
1. THE TOP END PLATE WILL BE WELDED TO THE 48 INCH DIAMETER PIPE AFTER THE NUCLIDE TRAP HAS BEEN INSTALLED. ALSO, A HYDROSTATIC LEAK TEST AT 15 PSIG FOR 15 MINUTES WILL BE PERFORMED ON THE PIPE AND BOTTOM END PLATE ASSEMBLY BEFOR THE TOP PLATE IS WELDED TO THE PIPE.
2. WELDING AND INSPECTION REQUIREMENTS WILL BE PER PAGE 3 OF THIS ENGINEERING SKETCH.

Attachment to Fab. Request # 2638

Drwg by: L. W. DUNCAN	Appvd by: [signature] 9/11/01	Title: ETA-EN-01-005 FABRICATION DETAILS FOR THE TWO LINERS THAT WILL CONTAIN EBR-II NUCLIDE TRAPS AND BE STORED AT RSWF	
Tol: NA	R.Engr.: L. W. DUNCAN		
Mat'l: CARBON STEEL: PIPE: API-5L GRADE B, PLATE: ASTM-A36		Scale: NA	Drwg: SK-LWD-797-081701

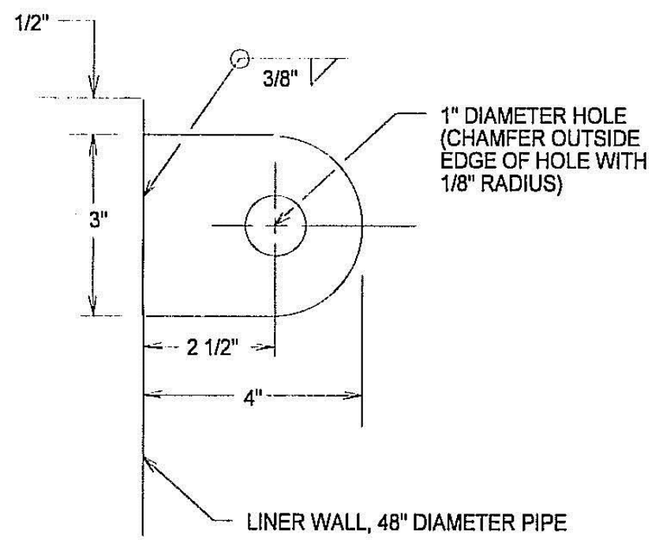

NOTE: INSTALL THE FOUR LINER PAD EYES 90 DEGREES APART FROM ONE ANOTHER

LINER PAD EYE (3/4" THICK PLATE)

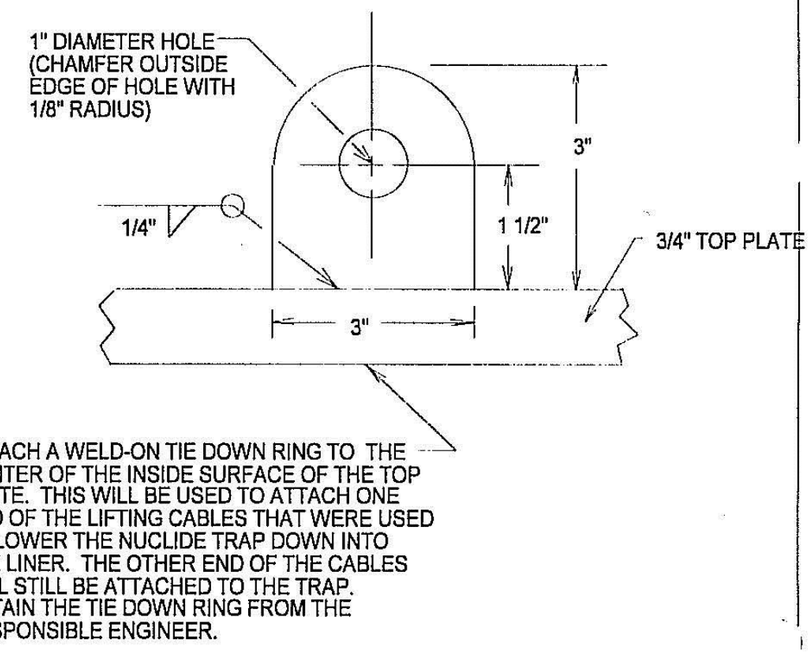

TOP PLATE PAD EYE (1/2" THICK PLATE)

Attachment To Fab. Request # 2638

Drwg by L. W. DUNCAN	Appvd. by [signature] 9/3/01	Title ETA-EN-01-005 FABRICATION DETAILS FOR THE TWO LINERS THAT WILL CONTAIN EBR-II NUCLIDE TRAPS AND BE STORED AT RSWF	
Tol. NA	R.Engr. L. W. DUNCAN		
Mat'l CARBON STEEL: PLATE: ASTM-A36		Scale NA	Drwg SK-LWD-797-081701 PAGE 2 OF 3

WELDING AND INSPECTION REQUIREMENTS

L. W. Duncan 10-09-01

WELDING NOTES: 1. ALL WELDING SHALL BE DONE IN ACCORDANCE WITH PAGES 1 AND 2 OF THIS DRAWING, AND IN ACCORDANCE WITH THE INEL WELDING PROCEDURE C2.0. THIS WELDING PROCEDURE SPECIFICATION MEETS THE REQUIREMENTS OF THE ASME B&PV CODE SECTION IX, 1998 EDITION.
Cor C6.8.

2. QUALITY CONTROL WILL PERFORM A VISUAL ON THE ROOT AND FINAL WELD PASS AND A DYE PENETRANT EXAMINATION SHALL BE PERFORMED ON THE FINAL WELD PASS PER ANSI B31.1-1995. ACCEPTANCE STANDARDS FOR THE VISUAL AND DYE PENETRANT EXAMINATIONS WILL ALSO BE PERFORMED IN ACCORDANCE WITH ANSI B31.1-1995.

3. A PIPING WELD RECORD MUST BE COMPLETED FOR EACH WELD IN ACCORDANCE WITH THE ATTACHMENT TO THIS ENGINEERING SKETCH.

4. PRIOR TO WELDING THE TOP END PLATE TO THE LINER, A HYDROSTATIC LEAK TEST AT 15 PSIG FOR 15 MINUTES MUST BE PERFORMED ON THE LOWER END PLATE AND LNER PIPE ASSEMBLY. ONCE THIS HYDROSTATIC TEST HAS BEEN COMPLETED, THE NUCLIDE TRAP CAN BE INSTALLED AND THE TOP END PLATES CONNECTED.

Attachment To Fab Request # 2638

Drwg by	Appvd. by	Title	
L. W. DUNCAN	[signature]	ETA-EN-01-005	
Tol NA	R.I ngr. L. W. DUNCAN	FABRICATION DETAILS FOR THE TWO LINERS THAT WILL CONTAIN EBR-II NUCLIDE TRAPS AND BE STORED AT RSWF	
Mat'l CARBON STEEL:		Scale NA	Drwg SK-LWD-797-081701

DWG. NO. W7710-0202-DD-00

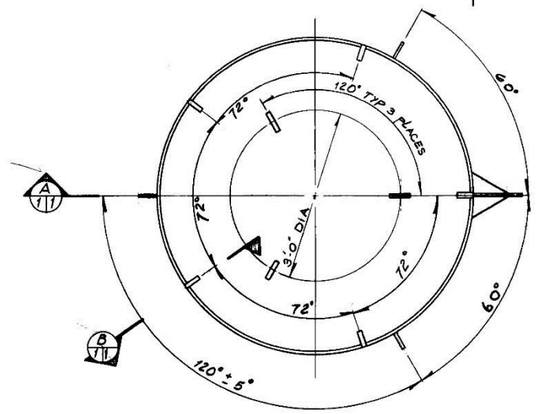

PLAN
NOT TO SCALE

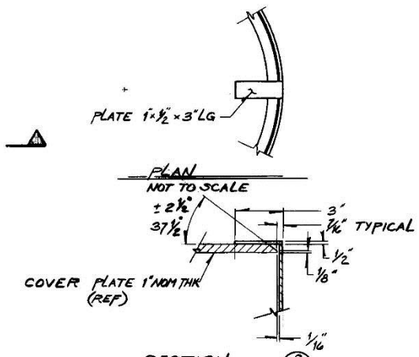

PLAN
NOT TO SCALE

SECTION
NOT TO SCALE

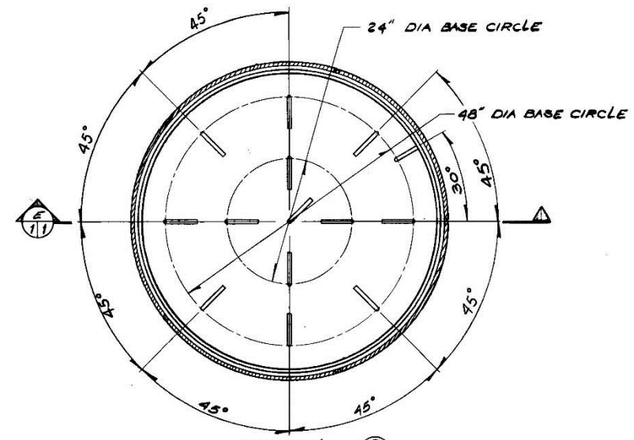

SECTION
NOT TO SCALE

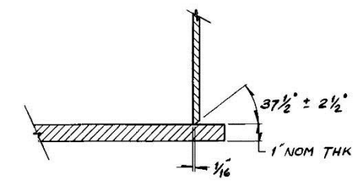

SECTION
SCALE 3" = 1'-0"

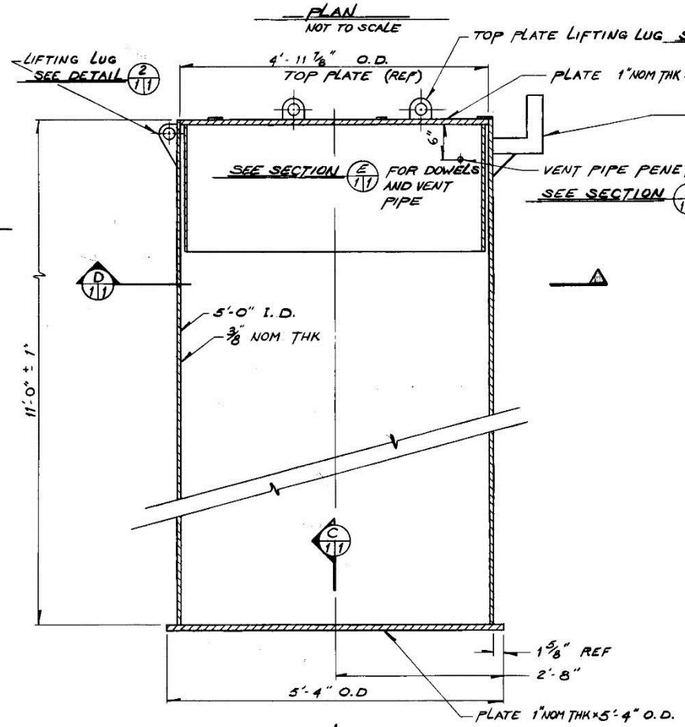

SECTION
NOT TO SCALE

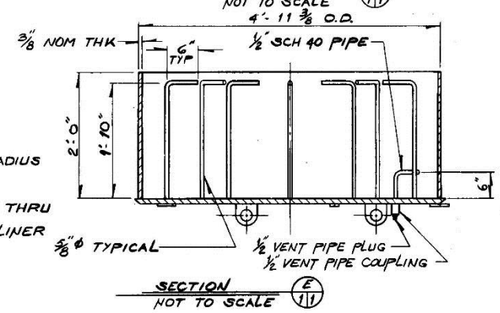

SECTION
NOT TO SCALE

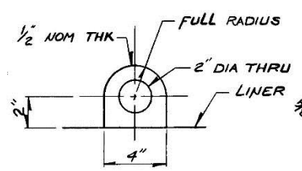

DETAIL - TOP & LIFTING LUG
SCALE 3" = 1'-0"

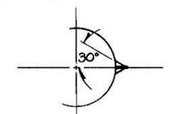

PARTIAL PLAN
SCALE = ¼" = 1'-0

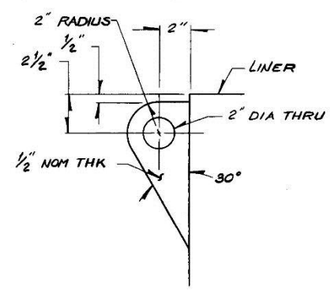

LIFTING LUG DETAIL
SCALE: 3" = 1'-0"

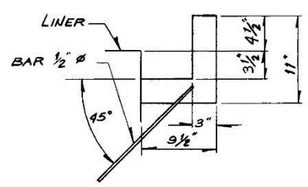

ELEVATION - BRACKET DETAIL
SCALE = 1½" = 1'-0

GENERAL NOTES:

1. SECTIONS AND DETAILS INDICATED ON THIS DRAWING ARE IDENTIFIED AS SHOWN:

2. MAKE AND MODEL NUMBERS ARE SHOWN TO INDICATE THOSE ON WHICH THE DESIGN IS BASED, NOT TO ELIMINATE APPROVED EQUIVALENTS.
3. ALL DESIGN AND FABRICATION SHALL BE IN ACCORDANCE WITH THE REQUIREMENTS OF THE ASME BOILER & PRESSURE VESSEL CODE SECTION VIII, UNFIRED PRESSURE VESSELS, EXCEPT CODE STAMP IS NOT REQUIRED, DESIGN PRESSURE 15 PSIG (INTERNAL). TEST PRESSURE 22½ PSIG (INTERNAL). USE E70XX LOW HYDROGEN ELECTRODE.
4. PAINT PER SPECS.
5. TOLERANCES SHALL BE IN ACCORDANCE WITH ASME BOILER AND PRESSURE CODE SECTION VIII UNLESS OTHERWISE SPECIFIED.
6. STEEL SHALL BE ASTM A283 GRADE C UNLESS OTHERWISE SPECIFIED.
7. STEEL BARS SHALL BE ASTM A36 OR EQUIVALENT
8. COVER SHALL NOT BE WELDED TO STORAGE VESSEL (LINER). PLATES 1" × ½" SHALL BE WELDED TO THE COVER AND TO THE LINER. ALL OTHER CONNECTIONS OF STEEL TO STEEL SHALL BE WELDED IN ACCORDANCE WITH NOTE 3

SYM	ZONE	CHANGE	BY	CHK'D	DATE

(C) 1976 ARGONNE NATIONAL LABORATORY 11-17-76

DRAWING CONSISTING OF 1 SHEET

APP'D V. G. AQUINO	DATE 9-2-76	APP'D D.W. CISSEL	9-2-76
J. D. LEMAN	9-1-76	J. W. AUER	9-2-76
L. C. WITBECK	9-1-76		
DRAWN D. NEWMAN	8-17-76	SERVICE REQUEST 81171/64336	
CHECKED J. D. LEWIS	8/76	PROJECT MGR. M.W. JACKSON	8-17-76
RESP. ENGINEER R. L. BLACK	8/17/76	APP'D/RELEASED P.P. Nelson	8/24/76
MATERIAL			

REF. NO. | NEXT ASSEMBLY | REQ'D

THIS DRAWING IS THE PROPERTY OF
ARGONNE NATIONAL LABORATORY

TITLE
EBR II PRIMARY COLD TRAP STORAGE VESSEL FOR R.S. & W. FACILITY #771 PLAN, SECTIONS & ELEVATION

ARGONNE WEST I.N.E.L.

SHEET 1 OF 1 | DRAWING NUMBER W7710-0202-DD | REV. 00

ANL-884A (8-72)

Attachment D-33

Drawings of Shield Plugs (Example)

DWG. NO.
W7710-0129-ED-00

NOTES:

1. WELD SYMBOLS PER AWS A2.4.
2. CARBON STEEL WELDING AND INSPECTION PER AWS D1.1-98. WELD ACCEPTANCE CRITERIA PER SECTION 6, STATICALLY LOADED. WELDING OF REBAR SHALL BE IN ACCORDANCE WITH AWS D1.4. ACCEPTANCE CRITERIA SECTION 4.4.
3. CONCRETE SHALL HAVE A MINIMUM DRY UNIT WEIGHT OF 240 LBS/CUBIC FOOT, AND MINIMUM 28 DAY COMPRESSIVE STRENGTH OF 5000 PSI. A MIX DESIGN SHALL BE SUBMITTED FOR APPROVAL BY THE LABORATORY. CONCRETE WORK SHALL BE IN ACCORDANCE WITH ACI 304.3R.

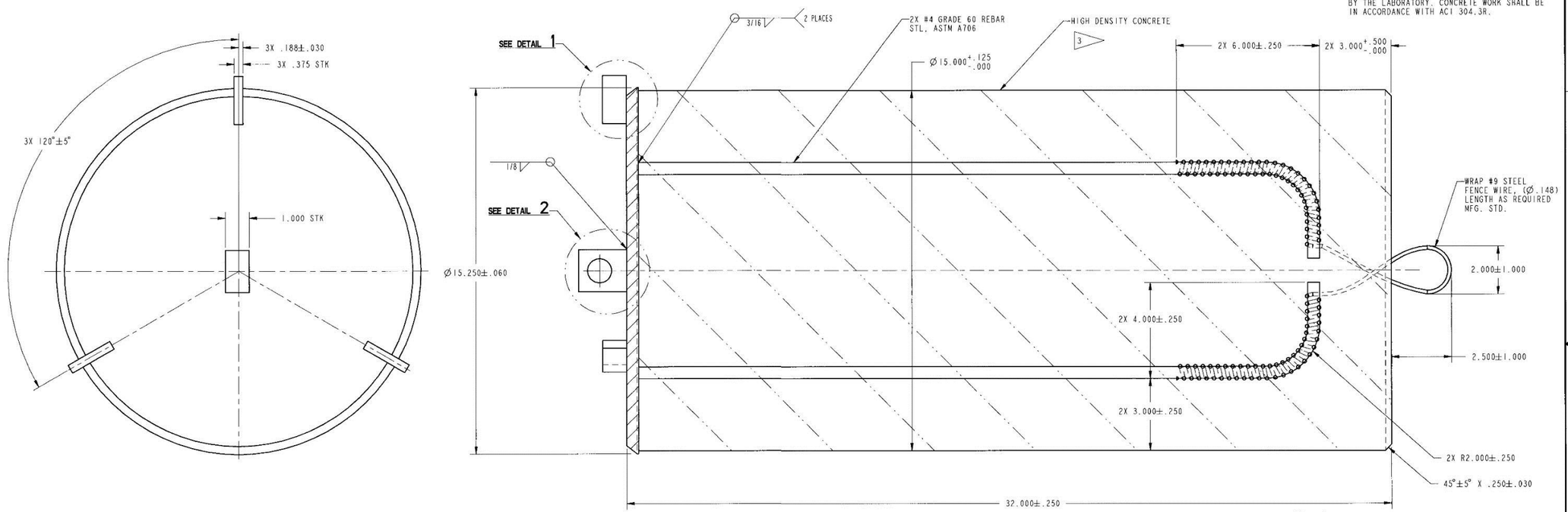

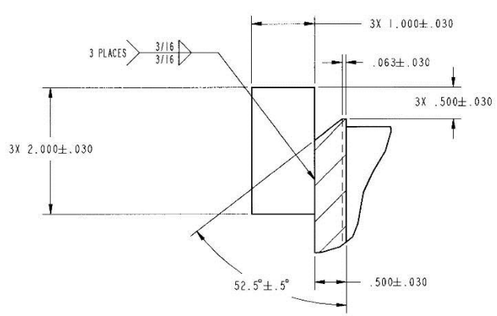

DETAIL 1
SCALE 1/1

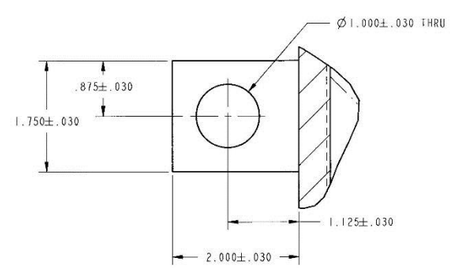

DETAIL 2
SCALE 1/1

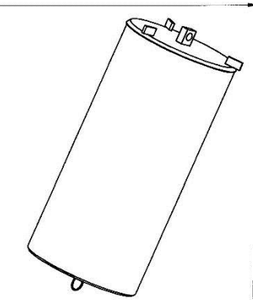

REFERANCE DRAWING:

W7710-0291-ED 16" OD X 12'-4" STORAGE LINER

PART NO.	NEXT ASSEMBLY	REQ'D
-	-	-

Idaho National Laboratory

TITLE MFC/RSWF BLDG. 771

SHIELD PLUG
(FOR 16" LINER W/.25 WALL THK.)

ETA NO. N/A		MEAAL SYSTEM ID NO. RSWF-001	
DRAWN BY C. LIU	DATE 5/5 2004	DRAFTING WORK REQUEST NO. 8451	
CHECKED FORREN	8/18 2005	PROJECT MGR.	DATE
RESP. ENGINEER	8/18 2005	APPR'D/RELEASED	10/4 05
MATERIAL STL, ASTM A36 AND NOTED			

UNLESS OTHERWISE NOTED
ALL DIMENSIONS ARE IN INCHES
ANGULAR TOL. ±1/4°
REMOVE ALL BURRS AND SHARP EDGES.
ALL MACHINED SURFACES TO BE 125/ OR FINER.
STOCK FINISHES AS RECEIVED, ARE IN ACCORDANCE WITH THE LATEST REVISION OF ANSI/ASME B46.1.
DIMENSIONS & TOLERANCES IN ACCORDANCE WITH ASME Y14.5-1994.

SYM	APPR'D	CHANGE	BY	CHK'D	DATE

SCAN DATE

SCALE	SHEET	PROJ'E DRAWING NUMBER	REV.
1/2	1 of 1	W7710-0129-ED	-00

DWG. NO. W7710-0128-ED-00

NOTES:

1. WELD SYMBOLS PER AWS A2.4.
2. CARBON STEEL WELDING AND INSPECTION PER AWS D1.1-98. WELD ACCEPTANCE CRITERIA PER SECTION 6, STATICALLY LOADED. WELDING OF REBAR SHALL BE IN ACCORDANCE WITH AWS D1.4. ACCEPTANCE CRITERIA SECTION 4.4.
3. CONCRETE SHALL HAVE A MINIMUM DRY UNIT WEIGHT OF 240 LBS/CUBIC FOOT, AND MINIMUM 28 DAY COMPRESSIVE STRENGTH OF 5000 PSI. A MIX DESIGN SHALL BE SUBMITTED FOR APPROVAL BY THE LABORATORY. CONCRETE WORK SHALL BE IN ACCORDANCE WITH ACI 304.3R.

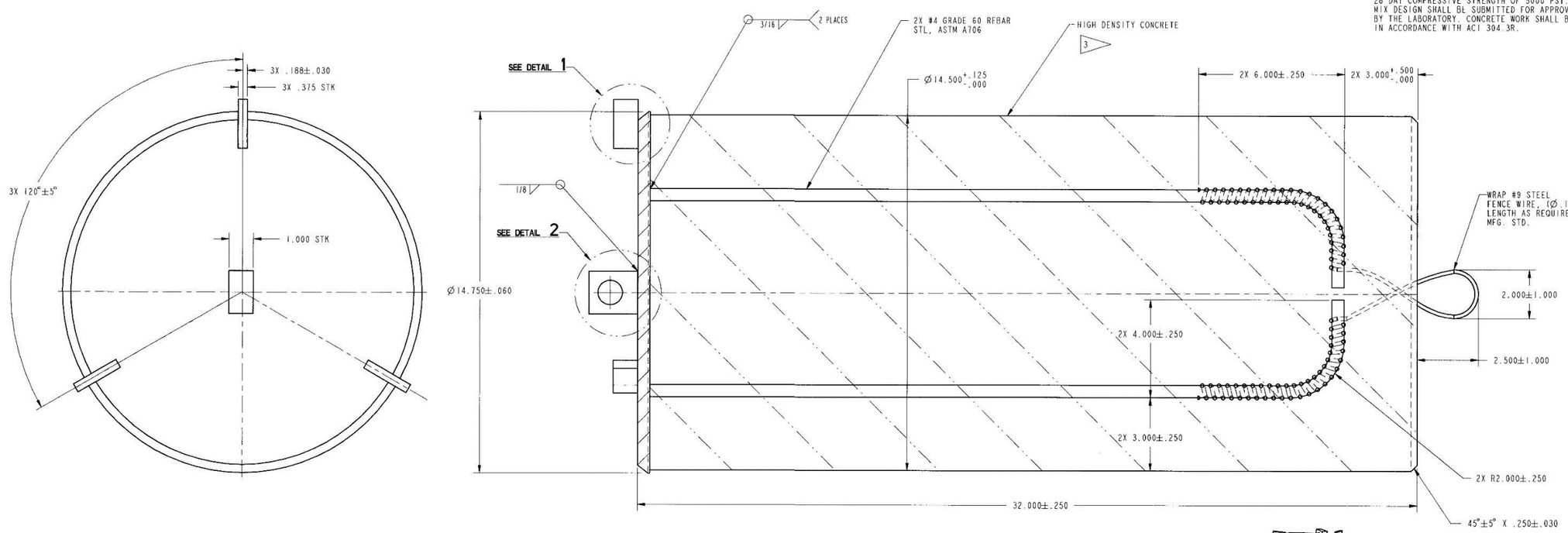

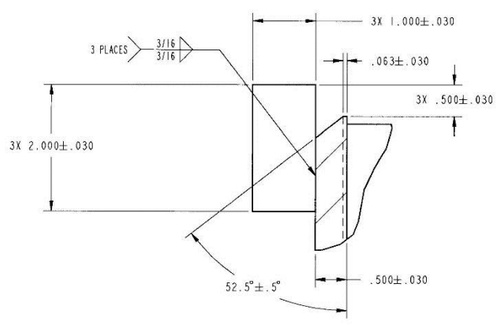

DETAIL 1
SCALE 1/1

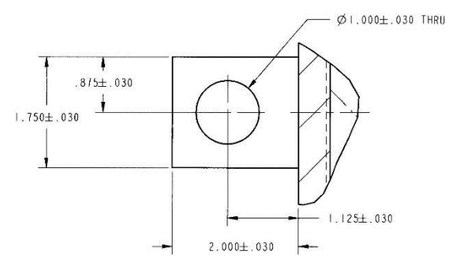

DETAIL 2
SCALE 1/1

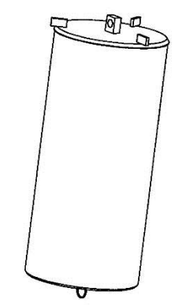

REFERANCE DRAWING:

W7710-0307-ED 16" OD X 10'-0" STORAGE LINER

ETA NO. N/A		MEAAL SYSTEM ID NO. RSWF-001	
DRAWN BY C. LIU	DATE 5/5 2004	DRAFTING WORK REQUEST NO. 8451	
CHECKED F. ORREN	8/18 2005	PROJECT MGR.	DATE /
RESP. ENGINEER		APPR'D PROJECT ENGR.	10/4
MATERIAL STL, ASTM A36 AND NOTED			

UNLESS OTHERWISE NOTED
ALL DIMENSIONS ARE IN INCHES
ANGULAR TOL. +1/4°
REMOVE ALL BURRS AND SHARP EDGES.
ALL MACHINED SURFACES TO BE 125/ OR FINER.
STOCK FINISHES AS RECEIVED. ARE IN ACCORDANCE WITH THE LATEST REVISION OF ANSI/ASME B46.1.
DIMENSIONS & TOLERANCES IN ACCORDANCE WITH ASME Y14.5-1994.

SCAN DATE | SYM | APPR'D | CHANGE | BY | CHK'D | DATE

PART NO.	NEXT ASSEMBLY	REQ'D
-	-	-

Idaho National Laboratory

TITLE MFC/RSWF BLDG. 771

SHIELD PLUG
(FOR 16" LINER W/.50 WALL THK.)

SCALE	SHEET	PROJE DRAWING NUMBER	REV.
1/2	1 of 1	W7710-0128-ED-00	

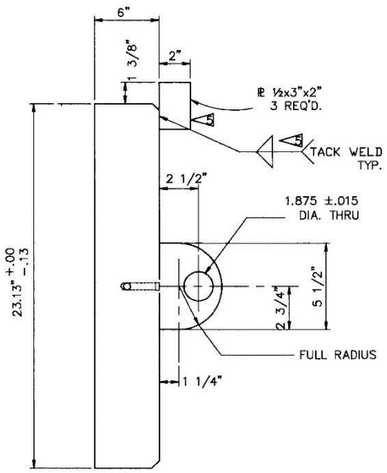

6" SOLID STEEL MACHINED PLUG

SECTION (A/1)
SCALE: QUARTER

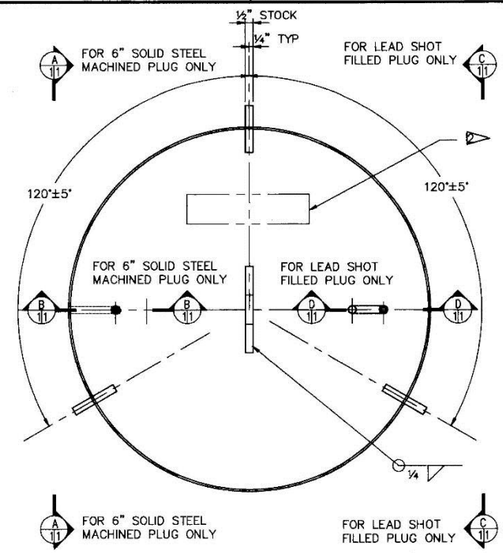

TOP VIEW
SCALE: QUARTER

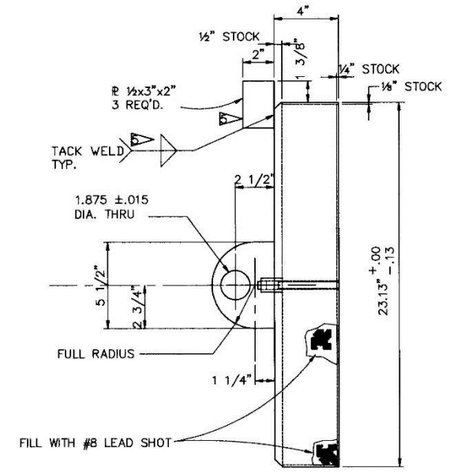

4" LEAD SHOT FILLED PLUG

SECTION (C/1)
SCALE: QUARTER

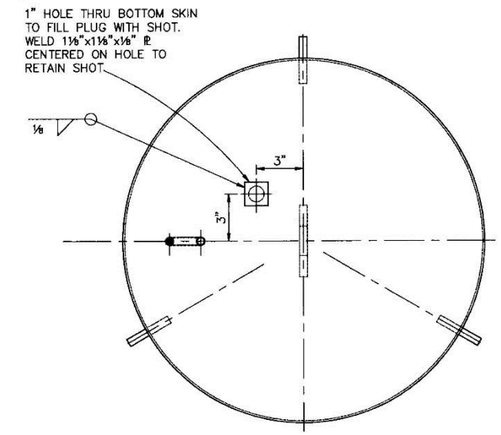

4" LEAD SHOT FILLED PLUG
BOTTOM VIEW
SCALE: QUARTER

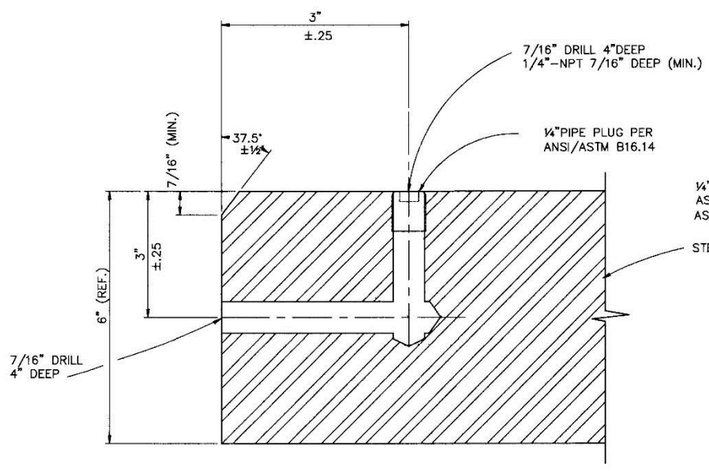

SECTION (B/1)
SCALE: FULL

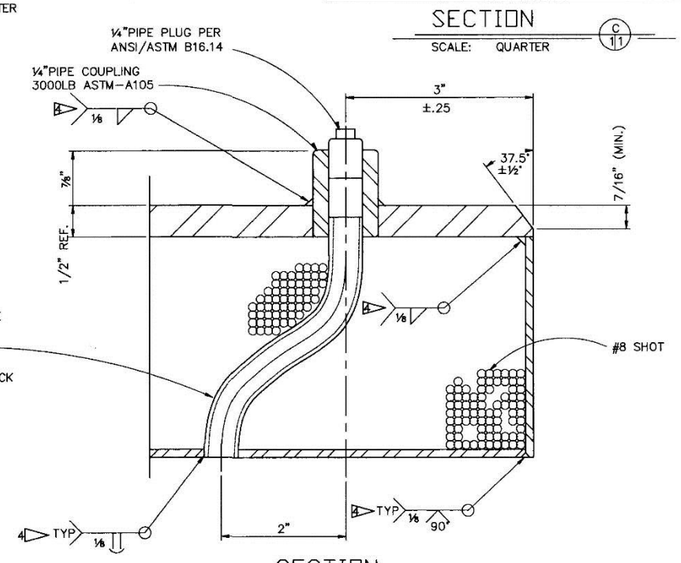

SECTION (D/1)
SCALE: FULL

NOTES:

1. WELDING SHALL BE PREFORMED IN ACCORDANCE WITH:

   FOR FABRICATION BY ANL-W SHOPS- I.N.E.L. WELD PROCEDURE C2.0* AND I.N.E.L. WELDING MANUAL SEC. 3*.

   FOR FABRICATION BY OUTSIDE VENDER. VENDER WELD PROCEDURE WHICH MEETS THE REQUIREMENTS OF AWS D1.1*. THE VENDER WELD PROCEDURE SHALL BE SUBMITTED TO ANL-W FOR APPROVAL PRIOR TO FABRICATION.

2. IDENTIFICATION SHALL BE STEEL IMPRESSION STAMPED WITH 3/8" HIGH CHARACTTERS. (STL FOR STEEL) OR (Pb FOR LEAD SHOT FILL).

3. REF. DRAWING W7710-0277-ED OVERSIZE LINER & COVER FOR R.S.W.F.

4. DYE PENETRANT CHECK PER ANSI/ASME B31.1 *PARAGRAPH 136.4.4. ANY UNACCEPTABLE INDICATIONS SHALL BE REPAIRED & RETESTED AFTER REPAIR

5. TEMPORARY TABS SHALL BE REMOVED AFTER WELDING SHIELD PLUG ONTO STORAGE LINER.

6. UNLESS OTHERWISE NOTED:
   ALL DIMENSIONS ARE INCHES
   FRACTIONAL TOLERANCE ±1/16
   DIMENSION/TOLERANCES IN ACCORDANCE WITH ANSI Y14.5.*

* FOR LATEST REVISION IN EFFECT AS OF FABRICATION DATE.

SYM	APPR'D	CHANGE	BY	CHK'D	DATE

MODIFIED BY: DATE: 10-18-94

DRAWING CONSISTING OF 1 SHEET

APPR'D	DATE	APPR'D	DATE
L.C. WITBECK	11/15/89	L.E. HAMBERLIN	12/89
H.A. GREENHALGH	11/30/89		
D.E. SWANSON	12/1/89		

DRAWN BY: GARTH HURLEY	9-12-89	SERVICE REQUEST: C6670	
CHECKED: R. BROOKSHIER	9-29-89	PROJECT MGR.	DATE
RESP. ENGINEER: R. BROOKSHIER	9-29-89	APPR'D/RELEASED: RP Nunn	12/1/89
MATERIAL: STL ASTM A635 GRADE AISI-1010-1020 & AS NOTED			

REF. NO.	NEXT ASSEMBLY	REQ'D

THIS DRAWING IS THE PROPERTY OF
ARGONNE NATIONAL LABORATORY

TITLE: RSWF SHIELD PLUG ASSEMBLY FOR OVERSIZED (24" O.D.) STORAGE LINER

ARGONNE WEST — I.N.E.L.

SHEET: 1 of 1 — DRAWING NUMBER: W7710-0287-ED-00 — REV.

PLOT SCALE: 1=4
EDIT DATE: 11-29-89

DWG. NO. W7710-0113-ED-00

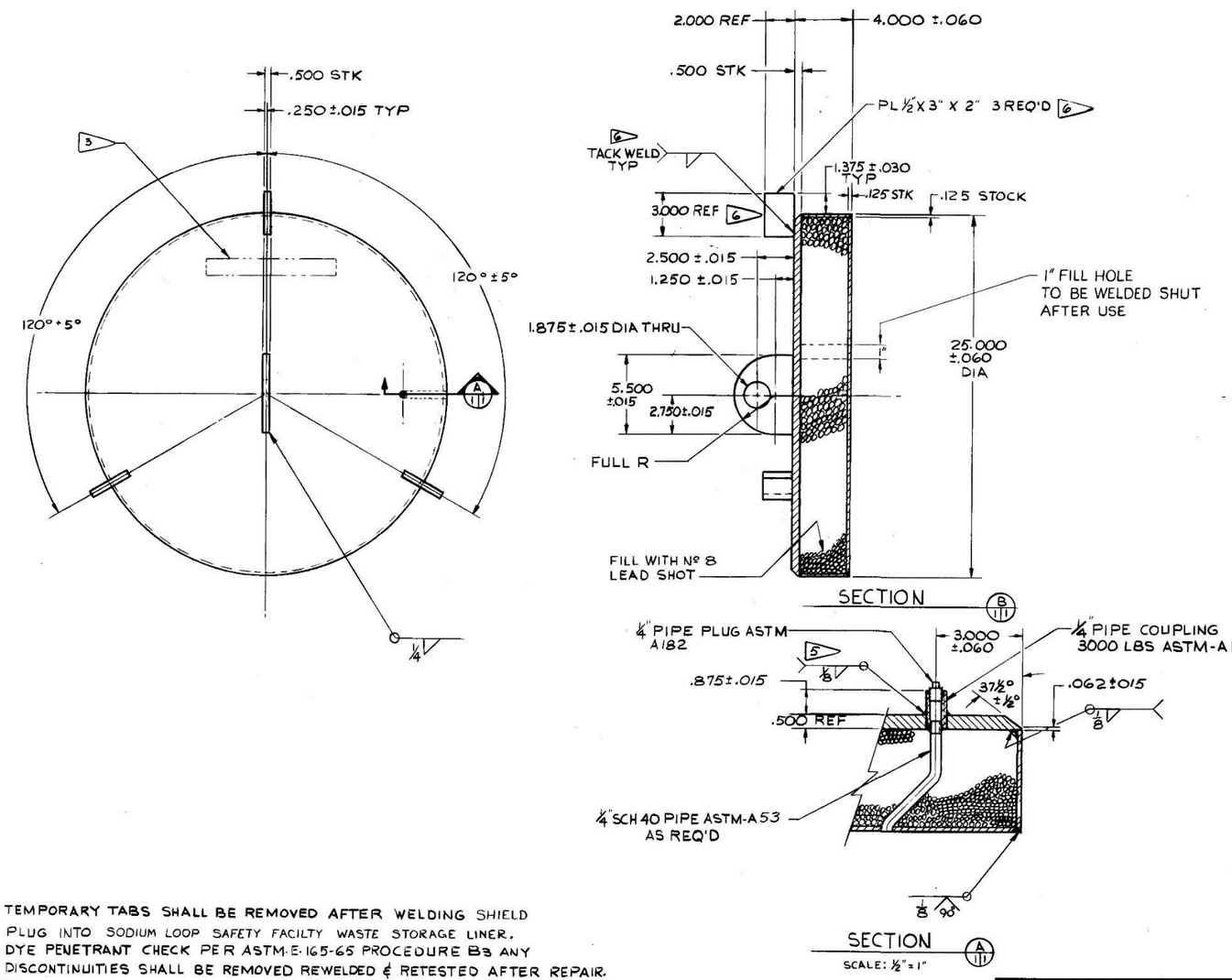

6 TEMPORARY TABS SHALL BE REMOVED AFTER WELDING SHIELD PLUG INTO SODIUM LOOP SAFETY FACILTY WASTE STORAGE LINER.

5 DYE PENETRANT CHECK PER ASTM-E-165-65 PROCEDURE B3 ANY DISCONTINUITIES SHALL BE REMOVED REWELDED & RETESTED AFTER REPAIR.

4. REF DWG W7710-0106-DD SLSF LINER & COVER FOR R.S.W.F. FACILITY.

3 IDENTIFICATION SHALL BE STAMPED WITH 3/8" HIGH CHARACTERS. (W7710-0113-ED)

2. WELD PER AWS D1.1-77 SECTIONS 2, 3 & 4.

1. WELD SYMBOLS PER ANSI Y32.3 1969.

— NOTES —

REF. NO.	NEXT ASSEMBLY	REQ'D

THIS DRAWING IS THE PROPERTY OF ARGONNE NATIONAL LABORATORY

TITLE: ANL-W SHIELD PLUG ASSY. FOR R.S.W.F. S.L.S.F. WASTE STORAGE LINER

DRAWN BY H.B HILL	DATE 7/20/79	GP. LEADER [signature]	DATE 9/6/79
CHECKED [signature]	9/5/79	PROJECT MGR.	
RESP. ENGINEER Ralph Potts	7-6-79	APPR'D/RELEASED R P Brown	5/13/80

STL AISI-1010-1020 & NOTED

SCALE 1/4 & NOTED | SHEET 1 OF 1 | DRAWING NUMBER W7710-0113-ED | REV 00

SR# A6391 A6486

MICROFILMED DATE 5-13-80

ANL-294A (11-77)

Attachment D-34

Drawing of RSWF Cathodic Protection System (Example)

REVISIONS		
REV	DESCRIPTION	EFFECTIVE DATE:
15	REVISED AND REDRAWN, TITLE BLOCK CHANGE, SEE eCR-628916	02/12/2015

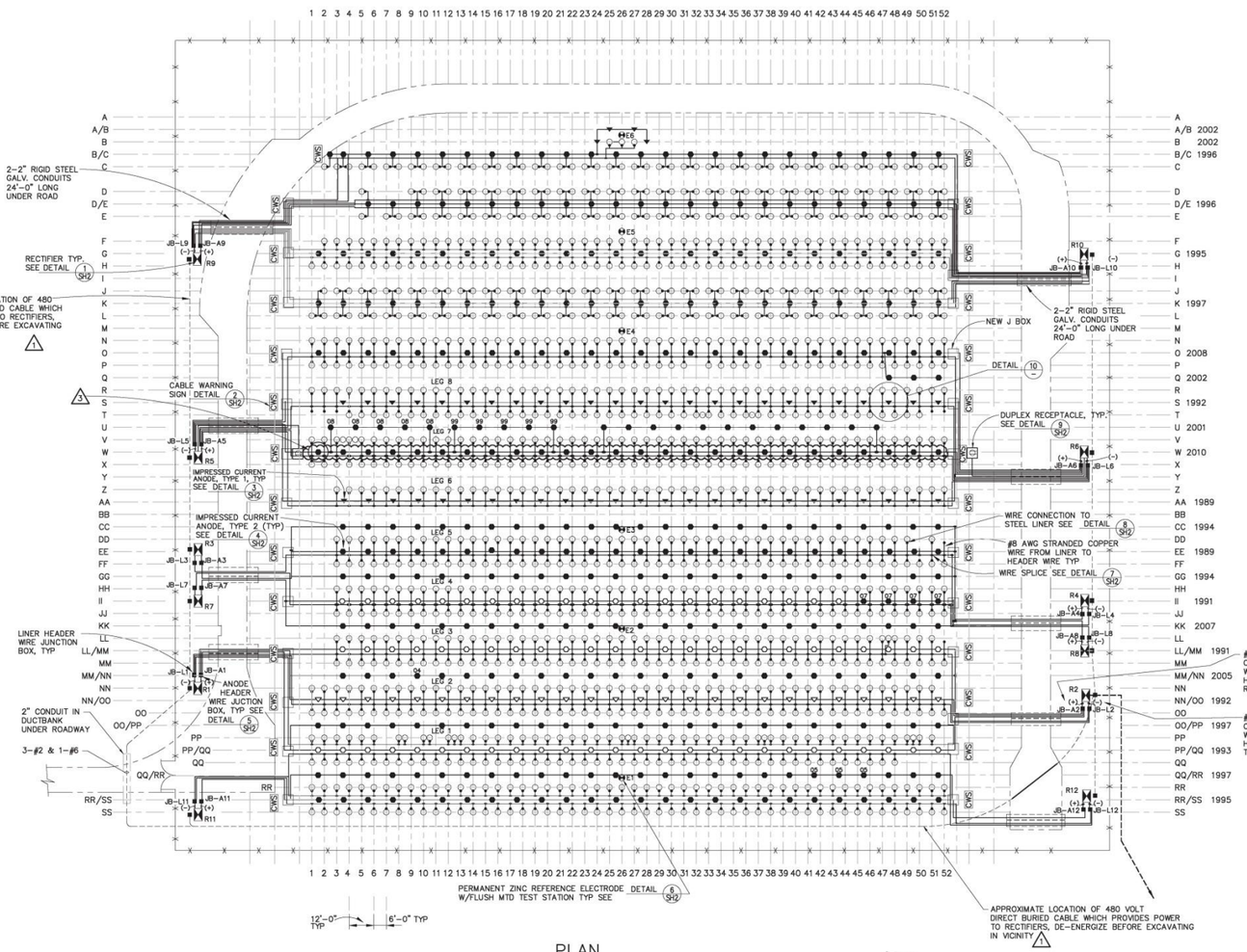

PLAN
RADIOACTIVE SCRAP AND WASTE FACILITY (RSWF)

SCALE: 1"=20'-0"

LEGENDS

- LINER
- 3" X 60" ANODE, TYPE 1
- 4" X 80" ANODE, TYPE 2
- 3" X 60" ANODE, TYPE 1 CANISTER
- 4" X 80" ANODE, TYPE 2 CANISTER
- WIRE CONNECTION
- WIRE SPLICE
- JUNCTION BOX
- RECTIFIER
- REFERENCE ELECTRODE
- R1 — TYPICAL RECTIFIER NUMBER
- JB-A1 — TYPICAL NUMBER SYSTEM FOR ANODE WIRE JUNCTION BOX (+)
- JB-L1 — TYPICAL NUMBER SYSTEM FOR LINER WIRE JUNCTION BOX (-)
- E1 — TYPICAL REFERENCE ELECTRODE NUMBER
- PULL BOX, 9" X 12" MINIMUM OPENING, REINFORCED CAST CONCRETE, COVER WITH 1/4" THICK PLATE, DETERMINE SIZE IN FIELD, FASTEN 1 1/2" x 1 1/2" X 1/4" ANGLE, 2 PLACES, TO PREVENT SHIFTING
- RECEPTACLE ON CONCRETE PAD
- CWS — CABLE WARNING SIGN
- K 1997 — TYPICAL YEAR OF MOST RECENT INSTALLATION OF ANODES IN ROW (UNLESS OTHERWISE NOTED ABOVE ANODE)
- 05 — TYPICAL YEAR OF MOST RECENT ANODE INSTALLATION IF DIFFERENT THAN YEAR NOTED FOR ROW

0 20 40 60 80
SCALE: 1"=20'

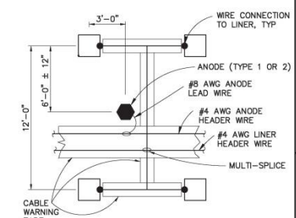

DETAIL 10
SCALE: NTS

NOTES

1. BEWARE OF BURIED 480V 3ø POWER LINES IN THIS AREA SEE DWG 747629 (W7710-0286-ED) FOR MORE INFORMATION AND APPROXIMATE LOCATION SHOWN AS
2. SEE DRAWING 747635 (W7710-0301-EE) FOR LINER CONFIGURATION AND SIZES.
3. ANODE SHORTENED BY 22 INCHES DUE TO INTERFERENCE WITH LAVA ROCK.
4. MAKE AND MODEL NUMBERS ARE SHOWN TO INDICATE THOSE ON WHICH THE DESIGN IS BASED. NOT TO ELIMINATE APPROVED EQUIVALENTS.

ALTERNATE ID: W7710-0828-EE

REQUESTER:	B.C. HARRIS
RESP ENGR:	D.S. FERGUSON
DESIGN:	D.S. FERGUSON
DRAWN:	G. HURLEY
PROJECT NO:	
SPCL CODE:	
FOR REVIEW/APPROVAL SIGNATURES SEE ECR NO:	
EFFECTIVE DATE:	8/5/91

Idaho National Laboratory

MFC-771
RADIOACTIVE SCRAP AND WASTE FACILITY (RSWF)

CATHODIC PROTECTION SYSTEM

SIZE	CADD CODE	DRAWING NUMBER	DWG NO.	REV
E	01MF3	AREA SYS DIV CL SEQ 273 0771 10 052	747628	15

SCALE: NOTED SHEET 1 OF 2

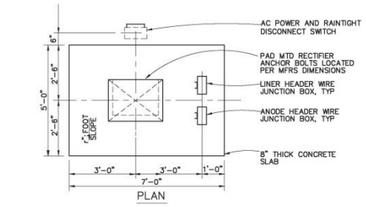

PLAN

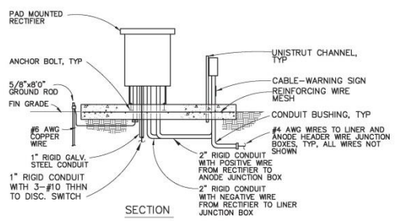

SECTION

SLAB MOUNTED RECTIFIER

DETAIL (1 / SH1)
SCALE: NTS

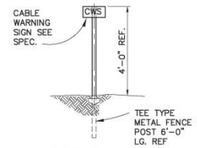

DETAIL (2 / SH1)
SCALE: NTS

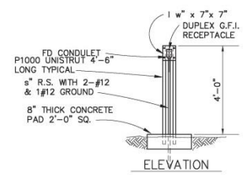

ELEVATION

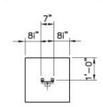

PLAN

DETAIL (9 / SH1)
SCALE: NTS

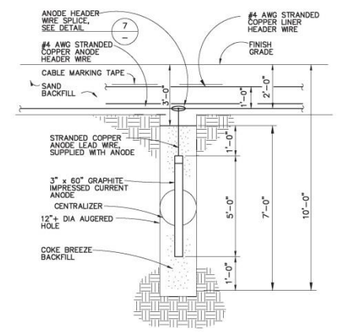

VERTICAL ANODE INSTALLATION TYPE 1

DETAIL (3 / SH1)
SCALE: NTS

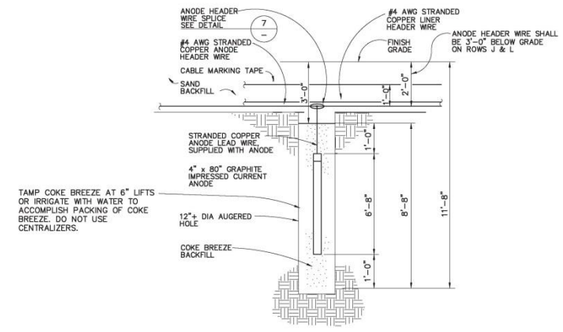

VERTICAL ANODE INSTALLATION TYPE 2

DETAIL (4 / SH1)
SCALE: NTS

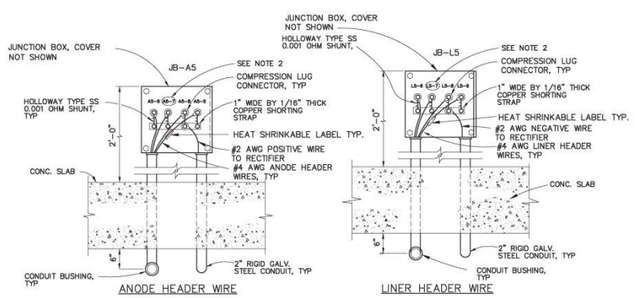

JUNCTION BOXES

DETAIL (5 / SH1)
SCALE: NTS

NOTES

1. IDENTIFY JUNCTION BOX TERMINALS ACCORDING TO JUNCTION BOX NO. AND LEG NO. TERMINAL IDENTIFICATIONS FOR J BOXES JB-A5 AND JB-L5 SHOWN.
2. A5 = JUNCTION BOX NUMBER, TYP
   7 = LEG NUMBER, TYP

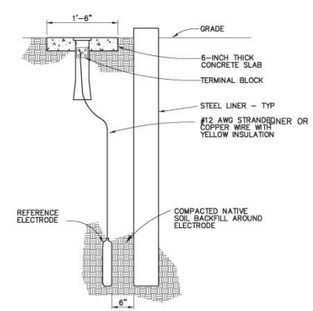

PERMANENT REFERENCE ELECTRODE INSTALLATION DETAIL

DETAIL (6 / SH1)
SCALE: NTS

NOTES

1. BOTTOM OF REFERENCE ELECTRODE ELEVATION TO MATCH BOTTOM OF LINER ELEVATION.
2. REFERENCE ELECTRODE INSTALLED ON OPPOSITE SIDE OF LINER FROM ANODE.

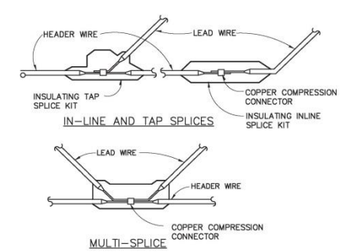

WIRE SPLICES

DETAIL (7 / 7 / SH1)
SCALE: NTS

NOTES

1. EPOXY SPLICE KITS SHALL BE CURED A MINIMUM OF 2 HOURS AND HEAT SHRINK SPLICE KITS COOLED A MINIMUM OF 1 HOUR BEFORE BURIAL OR SUBMERSION.
2. THE SILICONE GEL SPLICE INSULATING KIT SHALL BE INSPECTED FOR PROPER OUT FLOW OF SILICONE GEL BEFORE BURIAL

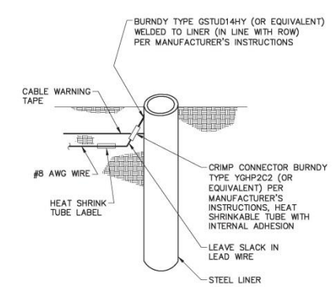

WIRE CONNECTION FOR STEEL LINERS

DETAIL (8 / SH1)
SCALE: NTS

SIZE	CAGE CODE	WORK ORDER NUMBER				DWG-	REV
E	01MF3	AREA	SYSTEM	SUB SYSTEM	CIRCUIT	747628	15
		273	077	10	052		

SCALE: NONE SHEET 2

Attachment D-35

2001 Corrosion Assessment Report for RSWF Cathodic Protection System

2001 CORROSION ASSESSMENT REPORT

for the

CATHODIC PROTECTION SYSTEM

of the

RADIOACTIVE SCRAP AND WASTE FACILITY (RSWF)

Prepared for Argonne National Laboratory - West

by

Lloyd R. Hardy, Craig L. Porter, P.E.

and John Sagers

October 10, 2001

JETSEAL

Engineering and Technical Services, LLC

INTRODUCTION

To support research and development at the Argonne National Laboratory (ANL-W) the Radioactive Scrap and Waste Facility (RSWF) was built and placed in service in 1965. In 1988 it was determined that the facility required upgrading which included installing new liners for all waste and protecting those liners with an impressed cathodic protection system. The upgraded RSWF is permitted as a Miscellaneous Unit under the ANL-W Part B RCRA Permit. One of the Permit conditions for the upgraded RSWF requires that "no later than four (4) years after installation, an empty liner shall be pulled and inspected...the results of this inspection shall be the basis of a report evaluating the effectiveness of the impressed cathodic protection system."[1] Additionally, "The Permittee shall propose a liner pull/inspection schedule to the Director for Approval based on the findings of the corrosion report." The initial evaluation was performed under the direction of an independent corrosion engineer in 1997 and included a recommendation that the spare liners continue to be pulled and inspected on the 4 year frequency initially specified in the subject Permit.[2] The purpose of this report is to document the second evaluation conducted in compliance with the RCRA Permit requirements.

Assessment Team

The key personnel of the Jetseal assessment team are Craig L. Porter, P.E., Project Manager , Lloyd R. Hardy, Corrosion Specialist, and John Sagers, statistician. Mr. Porter has a Bachelors Degree in Chemical Engineering and a Masters Degree in Environmental Remediation and Waste Management. He is a professional engineer registered in the State of Idaho. He has over twenty years of experience in piping system design and testing within the chemical and nuclear industries. His experience includes eight years supporting environmental compliance work similar to that being accomplished via the subject project. Mr. Hardy has 26 years of experience in the nuclear and waste management arena. The majority of his experience (21 years) has been in designing, constructing and monitoring cathodic protection systems for

---

[1] INEL Permit ID4890008952, Condition IV.M.2, Module IV, page 37, January 24, 1994.
[2] *Cathodic Assessment Report for the Cathodic Protection System of the Radioactive Scrap and Waste Facility (RSWF)*, L.R. Hardy and C.L. Porter, October 7, 1997.

underground tanks and piping. He was formerly a T10 Committee member (Underground Corrosion Control) for the National Association of Corrosion Engineers (NACE). He is very familiar with the cathodic protection systems at the INEEL. Mr. Sagers has both a Bachelors and Masters Degree in Statistics. He has over 16 years experience as a Senior Statistician in the aerospace and steel industries.

His work has included experimental design, statistical process control, and aging and surveillance studies. He has been a part-time instructor of Statistics at Brigham Young University for the past seven years, and is former President of the Utah Chapter of the American Statistical Association.

BACKGROUND INFORMATION

This section provides an overview of the subject facility, a description of the cathodic protection system and the corrosion monitoring program, and a summary of the technical approach followed for evaluating the effectiveness of the cathodic protection system.

Facility Overview

The RSWF is an outdoor storage facility that is approximately 388 ft wide and 448 ft long. Site preparation included grading several feet of gravel and soil over the storage area to slope gently from the centerline to the parallel sides. This grade promotes run-off, reducing percolation, and also serves to prevent run-on into the area from normal or anticipated abnormal events. Storage of waste (solid waste consisting of reactor and coolant loop components that are contaminated with elemental sodium and NaK) is in vertical carbon steel storage liners that are buried in the soil. The installation procedure requires backfilling the annulus between the liner and the soil with a sand slurry, providing a 4 in. noncorrosive layer between the native soil and the liner. The liners are constructed of Schedule 10 (0.25 in.) carbon steel pipe with an oversized thick steel plate welded on the bottom. The majority of the liners are 16 in. OD and 148 inches long and are arranged in a grid of 27 rows spaced 12 feet apart with approximately 50 storage sites per row.

Cathodic Protection

System Description -The cathodic protection system for the RSWF is a distributed anode impressed current system. It consists of graphite anodes placed equidistant from each group of four liners. The anode boring is backfilled with coke breeze. Reference electrodes are cast of special high grade zinc as specified in

ASTM B 6-77. Continuous DC power is supplied via rectifiers rated at 20 volts and 60 amps. No. 2 AWG wire connects the rectifiers to the liner and anode header wire junction boxes. The anode and liner header wires (No. 4 AWG) and the anode and liner lead wires (No. 8 AWG) are single-conductor, stranded copper wire with 600-volt High Molecular Weight Polyethylene insulation. The liner lead wires are cadwelded to the steel liners approximately 8 inches from the top of the liner. The anodes and liner header cables run down the center of every other row, 2 feet below the surface.

Periodic Inspection Program - The cathodic protection system inspection program consists of weekly, monthly and semiannual inspections. Weekly inspections of the rectifier indicator lights verify that the rectifiers are receiving power and operating. The monthly inspections verify proper operation by measuring and evaluating the following items:

- rectifier voltage and current
- power consumption
- rectifier efficiency

The semiannual inspections are more detailed and include the following measurements and inspections:

- anode and liner shunt voltages
- wiring connections
- continuity
- liner-to-buried zinc reference electrode at the bottom of selected liners
- ground cable impedance
- liner-to-soil potential

Corrosion Monitoring

The inspection program for the cathodic protection system verifies that the cathodic protection system is operating properly. The corrosion monitoring program verifies that the system is adequately protecting the waste liners from corrosion. Due to the radioactive fields associated with the active liners, they cannot be directly monitored for corrosion. Consequently, corrosion monitoring tubes were installed in areas of high corrosivity and between liners containing radioactive mixed waste. These tubes are 160 in. long, 4 in. OD, Schedule 10 (0.25 in. thick walls) pipes of the same material as the liners. They are connected to the cathodic protection system and maintained with the same level of impressed current per unit area as the liners. These tubes are installed in the same manner as the liners and therefore are subjected to the same

environmental conditions as the liners. By annually measuring the wall thickness of the corrosion surveillance tubes (via Ultrasonic Thickness Examination) and comparing the measurements to the installed thicknesses the effectiveness of the cathodic protection system is verified.

The final aspect of the corrosion monitoring program involves spare liners that have been installed in the most corrosive regions of the facility. At least every four years a spare liner is removed and examined to determine the extent of corrosion. The data resulting from the inspection and examination of the extracted spare liner is used to further verify the effectiveness of the cathodic protection system..

Technical Approach

In order to evaluate the effectiveness of the cathodic protection system the following steps were performed:

1. Review relevant documents regarding facility, liner and cathodic protection system design, construction, and operation, including soil resistivity studies
2. Review reports and data from monthly and semiannual inspection of the cathodic protection system
3. Observe spare liner extraction and visually inspect the exposed liner
4. Observe spare liner NDE consisting of thickness measurements (via UT) every 1" of the entire length at 45 degree intervals[3]
5. Perform depth measurements at areas of localized corrosion

DISCUSSION

Record Review - The review of relevant documents regarding the facility, liners, and cathodic protection system confirmed that:

- the spare liners are installed such that the corrosion they experience would represent worst case corrosion relative to the other liners in the system due to their placement in the most corrosive regions of the facility

[3] The technical justification for the NDE of the spare liner is found in "Comparison of RSWF Empty Liner Examination Approaches", Jetseal, Inc., L.R. Hardy and C.L. Porter, September 9, 1997.

- except for a few out-of-spec readings (the causes of which were promptly investigated and remedied) the inspection data from the last four years indicate that the cathodic protection system has been operating properly
- the data from the annual corrosion surveillance tubes wall thickness measurements indicate no measurable degradation of wall thickness. The readings are all consistent and within the manufacturer's tolerance for new pipe.

Inspection Results - Spare liner from location PP-9 was pulled and visually inspected on September 7, 2001. As shown in Figures 1,2 and 3, no general corrosion was evident along the length of the liner. The gouging evident on Figure 1 is from the soil auger used to remove the soil surrounding the liner just prior to the pull. Some localized corrosion was evident in regions where native soil was in contact with the liner (see Figure 4). Overall, the liner was in very good condition. The localized regions were characterized as minor corrosion. Table 1 summarizes the results of the mean, standard deviation and min/max of the 144 thickness measurements along each linear traverse. All the measurements are within the ±12.5% variance of the nominal wall thickness allowed by the ASTM standards for pipe manufacture. The full report of the thickness measurements is included as Appendix A.

Table 1 - Statistical Summary of Spare Liner PP-9 Thickness Measurements

Radial Location	Mean (in.)	Std. Dev.	Min/Max (in.)
0°	0.260	0.007	0.248/ 0.279
45°	0.253	0.003	0.248/ 0.275
90°	0.252	0.002	0.247/ 0.260
135°	0.253	0.002	0.245/ 0.259
180°	0.257	0.003	0.252/ 0.277
225°	0.256	0.002	0.251/ 0.260
270°	0.255	0.002	0.251/ 0.267
315°	0.255	0.002	0.251/ 0.261

Figure 1 – Spare Liner PP-9 Immediately After Being Pulled

Figure 2– Spare Liner PP-9 Rotated Approximately 90 Degrees

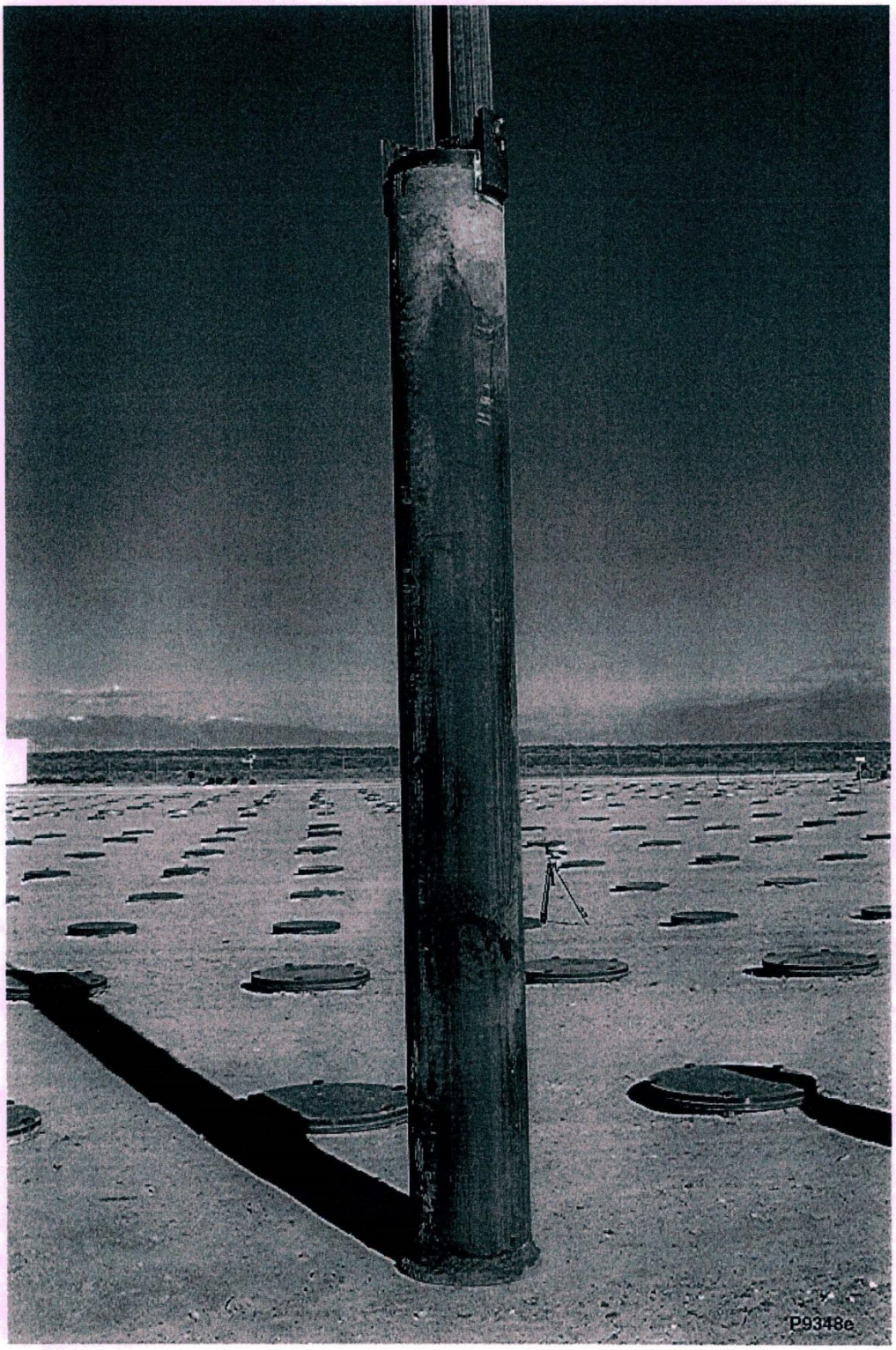

Figure 3– Spare Liner PP-9 After Additional Rotation

Figure 4 – Close-up of Localized Corrosion Due to Native Soil Adhering to Liner PP-9

Wall thickness measurements in and around the area of localized corrosion resulted in measurements consistent with the readings in Table 1. This minor corrosion after eight years is not significant but underscores the importance of strict adherence to the backfilling procedure when installing new liners.

CONCLUSION

General corrosion would be indicated by a general loss of wall thickness. The results of the wall thickness measurements from the corrosion surveillance tubes indicate that general corrosion is not occurring. This conclusion is verified by the wall thickness measurements from the spare liner removed from location PP-9.

The periodic inspection results from the cathodic protection system indicate that the system has been operating properly over the last four years. Figures 5 and 6 are a side-by-side comparison of the general appearance of liner PP-7 after four years in the ground and liner PP-9 after eight years. The overall condition is comparable. This evidence, along with the absence of general corrosion on the corrosion surveillance tubes and the spare liner (which have been continually connected to the cathodic protection system) supports the overall conclusion that the cathodic protection system is effective in protecting the liners of the RSWF from general external corrosion.

Figure 5 – After Four Years

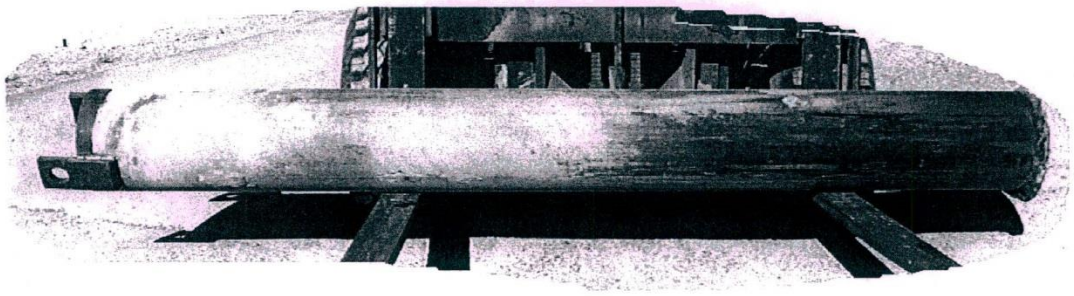

Figure 6 – Liner PP-9 After Eight Years

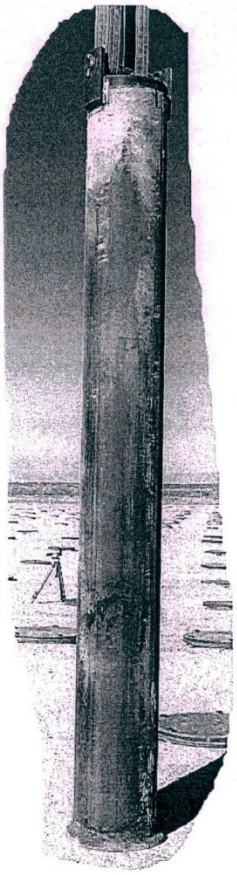

RECOMMENDATIONS

When the RSWF system was initially permitted a monitoring and inspection program was included as a permit condition to ensure that the waste is being properly contained. [4] As explained earlier in this assessment, the periodic inspection program focuses on ensuring proper and continuous operation of the cathodic protection system. The corrosion monitoring program verifies that the cathodic protection system as designed and operated adequately protects the liners from corrosion. The results from eight years of monitoring warrant a re-evaluation of the redundant aspects of the periodic inspection and corrosion monitoring programs.

Periodic Inspection Program

As covered in more detail in the main body of this assessment report, the periodic inspection program consists of weekly, monthly, and semi-annual inspection and testing. The weekly indicating light inspections serve to warn of a major power or equipment failure. The monthly testing of the rectifiers provides a more specific warning of a problem. Abrupt changes in the DC output or AC input would indicate a problem. Investigation of the problem requires troubleshooting by immediately performing the tests of the semi-annual inspection. The semi-annual testing includes two tests that indicate breakdown in cable insulation. Similarly, two different tests check to ensure the proper potential is applied to the liners.

It is recommended that the frequency of the semi-annual inspection be changed to an annual basis. The justification for this recommendation is three-fold: 1) if a problem is indicated via the monthly tests the more comprehensive testing of the semi-annual inspection program is immediately used to troubleshoot, 2) due to the overlapping nature of the monthly and semi-annual inspections and testing a severe problem would be

[4] Attachment 1.C, D-23 thru D-27 of INEEL: Partial Permit, Permit Number: ID4890008952, January 24, 1994.

reflected in the monthly rectifier readings, and 3) an annual frequency is consistent with the recommendation of the designers of the cathodic protection system.[5]

Corrosion Monitoring Program

There are three major elements of the corrosion monitoring program:

1. Annually, UT wall thickness measurements are taken on twelve 4-inch surveillance tubes. Nearly a quarter of a million readings are taken each year. To obtain the measurements each tube is filled with water (the couplant) and a special fixturing device is inserted.
2. Every four years a spare liner is extracted and examined to determine the extent of corrosion. The examination involves contact UT wall thickness measurements combined with visual inspection.
3. An empty liner must have UT wall thickness measurements performed within four years of being utilized. This is accomplished using a procedure similar to that used on the 4-inch tubes (UT measurements via a special fixturing device using water as the couplant).

The first two elements of the corrosion monitoring program are redundant in that they both verify adequate liner protection via the cathodic protection system. The differences between the two methods relate to time frame, and accuracy of the data. The annual basis of the 4-inch tube monitoring serves as an early warning of a potential corrosion trend. However, the data from the last eight years confirms that with a properly operating cathodic protection system the corrosion rate is slow enough that annual surveillance is unnecessary. It is somewhat analogous to timing an event that occurs over decades with a stopwatch that measures seconds. Two additional factors bring the utility of the annual 4-inch tube inspections into question. From a corrosion standpoint, adding water to the tubes is one of the worst things that can be done. Over time the residual moisture from the immersion UT procedure will induce corrosion that will render the tubes non-representative of the conditions in the rest of the RSWF. The annual inspection report of the four inch corrosion monitoring tubes describes several factors of the procedure that affect the readings. These include the backwall signal and the fixturing device:

> Back wall signal: The back wall signal is dependent on the fixturing device to keep the transducer perpendicular to the back wall. If the amplitude of the back wall signal decreases, the ability of

[5] Silkworth and Spickelmire, *Field Testing Report for Cathodic Protection of the RSWF Liners at the ANL-W Site*, CH2M Hill Central, Inc., August 1989, page 6.

the floating gate to monitor the back wall signal is challenged. Air bubbles between the transducer and the tube wall can have a detrimental effect on the back wall signal as well.

Fixturing Device: The fixturing device is a thirteen foot one and a half inch threaded aluminum pipe mounted on a flange. An AC variable speed motor and drive gears rotate the transducer down the tube. The flange of the fixturing device sits directly on the flange of the tube under inspection. The squareness of the welded flange and the out-of-roundness of the tube can have an effect on the alignment of the transducer. Travel of the fixturing device is also affected by the top end motion and wind. Too much movement in the fixturing device creates a signal on the Epoch III that is difficult to interpret. (taken from R.B. Lee to T.P. Zahn, *RSWF 2001 Annual Inspection Report of Four Inch Corrosion Monitoring Tubes*, September 24, 2001)

The challenge of controlling these factors leads to erroneous readings. This is reflected in the standard deviation of the mean thickness readings. A typical standard deviation of the mean thickness readings from the four inch tubes is 0.010 inches with a range of .003 to .064. By comparison the typical standard deviation of the mean thickness readings from the contact UT procedure used with the spare liners is .002 inches. In light of these factors it was considered recommending that the four inch corrosion tube monitoring requirement either be reduced in frequency or deleted all together from the permit. To ensure no significant trending has developed over eight years of data a statistical analysis was undertaken. The results of the analysis (included in Appendix A) show that "none of the tubes show a negative correlation over time, meaning there is no evidence of corrosion over the last eight years on the monitoring tubes." The analysis also indicated a bias for all readings on a given tube in a given year. This is most likely associated with the fixturing device.

Based on the data, analysis, and conclusions of this assessment the following recommendations are provided:

1. It is recommended that the spare liners continue to be pulled and inspected on the 4 year frequency initially specified in the subject Permit condition for the RSWF.
2. It is recommended that the annual monitoring of the four inch corrosion tubes be discontinued
3. It is recommended that Permit Condition IV.E.1.a. be modified (or interpreted) such that when UT wall thickness measurements are required they are limited to contact UT measurements of accessible portions of the empty liner rather than the entire length via the immersion technique.
4. It is recommended that the frequency of the semi-annual inspection be changed to an annual basis.

APPENDIX A

ARGONNE NATIONAL LABORATORY

INTRA-LABORATORY MEMO

September 12, 2001

TO: T. Zahn

FROM: W. R. Sayer RPS/QCI NDT

SUBJECT: Contact Ultrasonic Thickness Measurement RSWF Liner PP9

ATTACHMENTS: Thickness Measurement Spread Sheet
Statistical Data Report (Max/Min)
Ultrasonic Equipment Report
2D Contour Map

The contact Ultrasonic examination on liner PP9 has been completed using the Panametrics 26DL Plus Thickness Gauge. The data was collected and down loaded to the Viewsonics UDA Program, which provides the data analysis system. The attachments reflect the test results.

The test liner was set up in a grid of columns (A through H) with measurements taken approximately every inch. This method resulted in 144 readings per column. This random examination revealed a minimum thickness of .233 inches to a maximum of .284 inches. Minor mechanical cleaning was required to prepare the surface for the examination.

A cursory visual examination of the exterior pipe wall showed several areas of gouges, most likely attributed to the use of the auger to drill soil prior to removing. There appears to be more damage to the material thickness of the liner from the extraction process than that of exterior corrosion from the soil.

Should you have further questions, please contact me at 3-7218. The liner remains behind building 781.

cc: B. Meppen (No Attachments)
R. B. Lee
ITF/NDT RSWF PP9

File: PP9.00X

	A	B	C	D	E	F	G	H
1:	0.275	0.250	0.251	0.254	0.255	0.259	0.259	0.251
2:	0.271	0.257	0.247	0.256	0.261	0.254	0.259	0.253
3:	0.273	0.262	0.249	0.254	0.258	0.254	0.257	0.257
4:	0.273	0.249	0.252	0.253	0.257	0.257	0.256	0.256
5:	0.275	0.253	0.249	0.255	0.266	0.254	0.257	0.254
6:	0.274	0.255	0.249	0.254	0.257	0.253	0.254	0.258
7:	0.279	0.253	0.250	0.256	0.258	0.257	0.261	0.256
8:	0.276	0.261	0.250	0.258	0.258	0.257	0.255	0.261
9:	0.272	0.254	0.258	0.259	0.261	0.256	0.252	0.257
10:	0.273	0.255	0.257	0.252	0.260	0.255	0.253	0.254
11:	0.272	0.254	0.253	0.257	0.260	0.255	0.256	0.260
12:	0.273	0.253	0.253	0.257	0.258	0.257	0.258	0.255
13:	0.269	0.252	0.252	0.256	0.257	0.259	0.254	0.257
14:	0.276	0.252	0.254	0.251	0.256	0.260	0.253	0.256
15:	0.270	0.254	0.253	0.250	0.258	0.256	0.251	0.260
16:	0.266	0.255	0.252	0.253	0.257	0.253	0.255	0.256
17:	0.266	0.254	0.254	0.252	0.258	0.255	0.253	0.255
18:	0.266	0.256	0.251	0.255	0.256	0.255	0.254	0.254
19:	0.272	0.256	0.251	0.254	0.256	0.259	0.252	0.255
20:	0.265	0.257	0.254	0.253	0.255	0.255	0.252	0.254
21:	0.272	0.252	0.251	0.250	0.256	0.252	0.251	0.253
22:	0.279	0.251	0.255	0.251	0.255	0.255	0.253	0.253
23:	0.276	0.253	0.253	0.253	0.257	0.254	0.253	0.254
24:	0.269	0.252	0.252	0.253	0.255	0.258	0.254	0.253
25:	0.264	0.252	0.253	0.253	0.260	0.253	0.254	0.254
26:	0.267	0.254	0.251	0.253	0.257	0.254	0.253	0.253
27:	0.266	0.254	0.252	0.253	0.256	0.254	0.253	0.255
28:	0.266	0.254	0.251	0.254	0.257	0.255	0.252	0.255
29:	0.263	0.253	0.251	0.255	0.257	0.253	0.253	0.253
30:	0.262	0.252	0.251	0.254	0.255	0.254	0.251	0.254
31:	0.266	0.257	0.252	0.254	0.256	0.253	0.253	0.254
32:	0.261	0.257	0.254	0.255	0.256	0.254	0.254	0.255
33:	0.261	0.256	0.255	0.254	0.256	0.255	0.254	0.254
34:	0.258	0.256	0.250	0.256	0.252	0.256	0.255	0.254
35:	0.262	0.255	0.252	0.252	0.256	0.254	0.252	0.256
36:	0.261	0.254	0.251	0.255	0.253	0.255	0.255	0.255
37:	0.260	0.253	0.251	0.254	0.254	0.254	0.257	0.254
38:	0.261	0.254	0.252	0.253	0.258	0.256	0.257	0.255
39:	0.262	0.254	0.252	0.253	0.254	0.255	0.257	0.253
40:	0.260	0.253	0.253	0.257	0.260	0.255	0.255	0.254
41:	0.261	0.253	0.254	0.256	0.257	0.256	0.257	0.254
42:	0.260	0.255	0.251	0.256	0.255	0.253	0.257	0.254
43:	0.265	0.252	0.260	0.255	0.263	0.256	0.254	0.256
44:	0.261	0.251	0.252	0.254	0.254	0.256	0.258	0.253
45:	0.261	0.252	0.251	0.254	0.255	0.255	0.256	0.254
46:	0.263	0.251	0.254	0.255	0.253	0.255	0.259	0.254
47:	0.256	0.250	0.251	0.255	0.254	0.253	0.255	0.253
48:	0.258	0.253	0.253	0.255	0.254	0.251	0.254	0.255
49:	0.258	0.251	0.256	0.254	0.255	0.252	0.259	0.254
50:	0.258	0.251	0.251	0.253	0.254	0.257	0.255	0.255
51:	0.258	0.254	0.250	0.253	0.255	0.254	0.253	0.254
52:	0.257	0.251	0.253	0.251	0.256	0.255	0.257	0.254
53:	0.256	0.250	0.253	0.253	0.255	0.255	0.258	0.254
54:	0.258	0.251	0.254	0.255	0.255	0.257	0.257	0.257
55:	0.258	0.251	0.251	0.254	0.254	0.256	0.254	0.254
56:	0.260	0.248	0.251	0.253	0.255	0.255	0.256	0.254
57:	0.258	0.253	0.253	0.252	0.277	0.256	0.257	0.254
58:	0.260	0.253	0.251	0.251	0.255	0.256	0.255	0.254
59:	0.260	0.252	0.251	0.251	0.259	0.255	0.256	0.256
60:	0.258	0.254	0.251	0.251	0.260	0.255	0.259	0.254
61:	0.258	0.256	0.251	0.254	0.256	0.254	0.257	0.254
62:	0.261	0.253	0.251	0.251	0.256	0.255	0.254	0.254
63:	0.262	0.252	0.253	0.253	0.254	0.255	0.255	0.255
64:	0.260	0.250	0.249	0.250	0.257	0.254	0.255	0.254
65:	0.258	0.252	0.250	0.254	0.256	0.259	0.256	0.257
66:	0.259	0.251	0.251	0.254	0.256	0.256	0.256	0.254
67:	0.260	0.253	0.253	0.254	0.254	0.257	0.256	0.256
68:	0.262	0.256	0.251	0.253	0.256	0.260	0.255	0.253
69:	0.260	0.254	0.250	0.252	0.256	0.257	0.256	0.254
70:	0.267	0.255	0.252	0.252	0.254	0.257	0.257	0.255
71:	0.263	0.255	0.250	0.253	0.255	0.255	0.256	0.259
72:	0.261	0.254	0.251	0.251	0.256	0.255	0.256	0.254
73:	0.260	0.256	0.252	0.252	0.255	0.255	0.259	0.257
74:	0.260	0.275	0.250	0.251	0.256	0.255	0.257	0.256
75:	0.260	0.263	0.250	0.253	0.257	0.254	0.257	0.257
76:	0.260	0.255	0.250	0.255	0.255	0.257	0.256	0.256
77:	0.264	0.254	0.249	0.253	0.255	0.256	0.255	0.259
78:	0.262	0.254	0.250	0.251	0.254	0.257	0.256	0.255
79:	0.257	0.254	0.252	0.255	0.255	0.257	0.259	0.261
80:	0.258	0.253	0.248	0.254	0.256	0.255	0.255	0.256
81:	0.260	0.254	0.255	0.252	0.256	0.255	0.255	0.253
82:	0.261	0.259	0.251	0.253	0.257	0.255	0.255	0.258
83:	0.260	0.253	0.253	0.252	0.257	0.257	0.255	0.257
84:	0.266	0.254	0.249	0.251	0.257	0.257	0.256	0.257
85:	0.260	0.253	0.250	0.254	0.257	0.260	0.255	0.259
86:	0.257	0.251	0.251	0.251	0.255	0.258	0.255	0.256
87:	0.258	0.252	0.253	0.253	0.255	0.257	0.255	0.254

88:	0.257	0.253	0.252	0.253	0.255	0.257	0.253	0.256
89:	0.277	0.258	0.250	0.251	0.256	0.257	0.255	0.258
90:	0.260	0.255	0.249	0.254	0.256	0.255	0.255	0.256
91:	0.257	0.256	0.253	0.252	0.256	0.255	0.255	0.256
92:	0.259	0.251	0.252	0.250	0.256	0.257	0.254	0.255
93:	0.255	0.251	0.250	0.245	0.255	0.255	0.255	0.253
94:	0.256	0.251	0.251	0.251	0.255	0.257	0.256	0.257
95:	0.260	0.251	0.249	0.250	0.257	0.258	0.254	0.254
96:	0.260	0.254	0.251	0.255	0.256	0.257	0.254	0.251
97:	0.263	0.252	0.251	0.253	0.255	0.255	0.255	0.254
98:	0.257	0.253	0.249	0.255	0.253	0.258	0.253	0.256
99:	0.258	0.253	0.248	0.254	0.255	0.258	0.254	0.252
100:	0.259	0.254	0.249	0.254	0.257	0.256	0.253	0.255
101:	0.256	0.254	0.252	0.252	0.257	0.257	0.253	0.255
102:	0.256	0.252	0.253	0.254	0.257	0.257	0.253	0.251
103:	0.258	0.253	0.252	0.252	0.256	0.253	0.253	0.255
104:	0.255	0.253	0.250	0.253	0.255	0.256	0.252	0.254
105:	0.255	0.252	0.249	0.252	0.257	0.257	0.253	0.257
106:	0.255	0.252	0.248	0.255	0.258	0.256	0.252	0.253
107:	0.254	0.252	0.249	0.255	0.256	0.258	0.251	0.253
108:	0.255	0.252	0.248	0.255	0.257	0.258	0.253	0.256
109:	0.257	0.251	0.249	0.255	0.257	0.256	0.255	0.254
110:	0.256	0.253	0.250	0.255	0.257	0.257	0.252	0.251
111:	0.261	0.253	0.250	0.254	0.257	0.256	0.252	0.255
112:	0.252	0.251	0.250	0.251	0.257	0.257	0.253	0.252
113:	0.254	0.248	0.251	0.253	0.255	0.256	0.254	0.254
114:	0.249	0.250	0.249	0.250	0.260	0.256	0.255	0.253
115:	0.253	0.251	0.250	0.252	0.259	0.256	0.254	0.256
116:	0.253	0.251	0.252	0.254	0.259	0.259	0.253	0.255
117:	0.251	0.252	0.251	0.251	0.263	0.257	0.254	0.255
118:	0.250	0.253	0.250	0.255	0.258	0.258	0.255	0.256
119:	0.251	0.251	0.249	0.252	0.260	0.257	0.254	0.255
120:	0.252	0.253	0.252	0.255	0.260	0.257	0.255	0.257
121:	0.253	0.254	0.251	0.254	0.260	0.259	0.255	0.255
122:	0.250	0.253	0.256	0.255	0.259	0.257	0.256	0.254
123:	0.251	0.254	0.254	0.256	0.258	0.257	0.255	0.254
124:	0.253	0.254	0.253	0.252	0.258	0.256	0.254	0.256
125:	0.251	0.253	0.253	0.253	0.258	0.257	0.255	0.255
126:	0.251	0.254	0.253	0.256	0.256	0.256	0.255	0.255
127:	0.250	0.253	0.252	0.252	0.258	0.257	0.255	0.255
128:	0.254	0.253	0.252	0.254	0.257	0.257	0.255	0.255
129:	0.255	0.253	0.253	0.254	0.257	0.255	0.253	0.256
130:	0.251	0.253	0.253	0.252	0.256	0.256	0.254	0.256
131:	0.253	0.253	0.252	0.255	0.257	0.255	0.253	0.256
132:	0.253	0.252	0.251	0.254	0.257	0.256	0.256	0.255
133:	0.253	0.253	0.250	0.256	0.255	0.257	0.254	0.255
134:	0.252	0.254	0.252	0.253	0.255	0.256	0.254	0.255
135:	0.253	0.253	0.253	0.254	0.255	0.256	0.254	0.253
136:	0.253	0.253	0.253	0.254	0.255	0.255	0.252	0.254
137:	0.250	0.253	0.253	0.252	0.255	0.254	0.255	0.255
138:	0.253	0.253	0.254	0.255	0.254	0.253	0.252	0.256
139:	0.250	0.252	0.253	0.255	0.254	0.251	0.254	0.255
140:	0.252	0.252	0.253	0.254	0.254	0.254	0.254	0.255
141:	0.254	0.257	0.253	0.253	0.256	0.255	0.254	0.255
142:	0.252	0.252	0.254	0.255	0.254	0.256	0.253	0.254
143:	0.248	0.251	0.252	0.248	0.253	0.257	0.254	0.258
144:	0.257	0.251	0.249	0.257	0.256	0.256	0.254	0.255

Color Scale

0.000 to 0.251
0.252 to 0.256
0.257 to 0.262
0.263 to 0.268
0.269 to 0.273
0.274 to 0.279

Page 1 UDA - File: PP9.00X 9/12/2001 9:27AM Row: 1 to 144

Column	Mean	Std. Dev.	Min	Max
A	0.260	0.007	0.248	0.279
C	0.253	0.003	0.248	0.275
D	0.252	0.002	0.247	0.260
E	0.253	0.002	0.245	0.259
F	0.257	0.003	0.252	0.277
G	0.256	0.002	0.251	0.260
H	0.255	0.002	0.251	0.267
	0.255	0.002	0.251	0.261

No.:

ULTRASONIC THICKNESS MEASUREMENT RECORD

Procedure No.:NDT-78 Rev.:2

Q.C.Call No.: System No.:

Unit: Date:9/11/01

M. No.:

Plant:ANL-W RSWF

Component:PP9

Component Location:RSWF

Area Examined:Longitudinal contact 45 degree increments at 144 measurements per column.

Material:steel pipe Material Temp:ambient

Surface Condition (as found):Satisfactory with auger type gouges.

Examination Surface Condition:Good

Instrument Brand:Panametrics Model:26 DL Plus Ser.No.:92091511

Transducer Brand:Panametrics Model:D790SM Ser.No.:1092107

Size:1/2 inch Freq:5 Mhz /Couplant:Ultragel II

Distance Cal blk.No.:2218E

Reference thick. used for Calib. : (1).05 (2)1.5 (3)

Reference VELOCITY:..23 X 10 exp 6 inches per second

Original Design Thickness:SCH 10 Pipe Min Thickness Found:.245

Remarks: This contact UT thickness examination is being used to verify cathodic protection of steel at RSWF.

Examiner Richard Lee Level I Date 9-12-01

Report Reviewer [illegible] Date 9/12/01

This report is supplemented by Data Sheet No._____

Acceptance / Rejection of component is by the responsible supervisor

Report and Attachments received by_____ Date_____

2D Contour Map for PP9.00X - 9/11/01

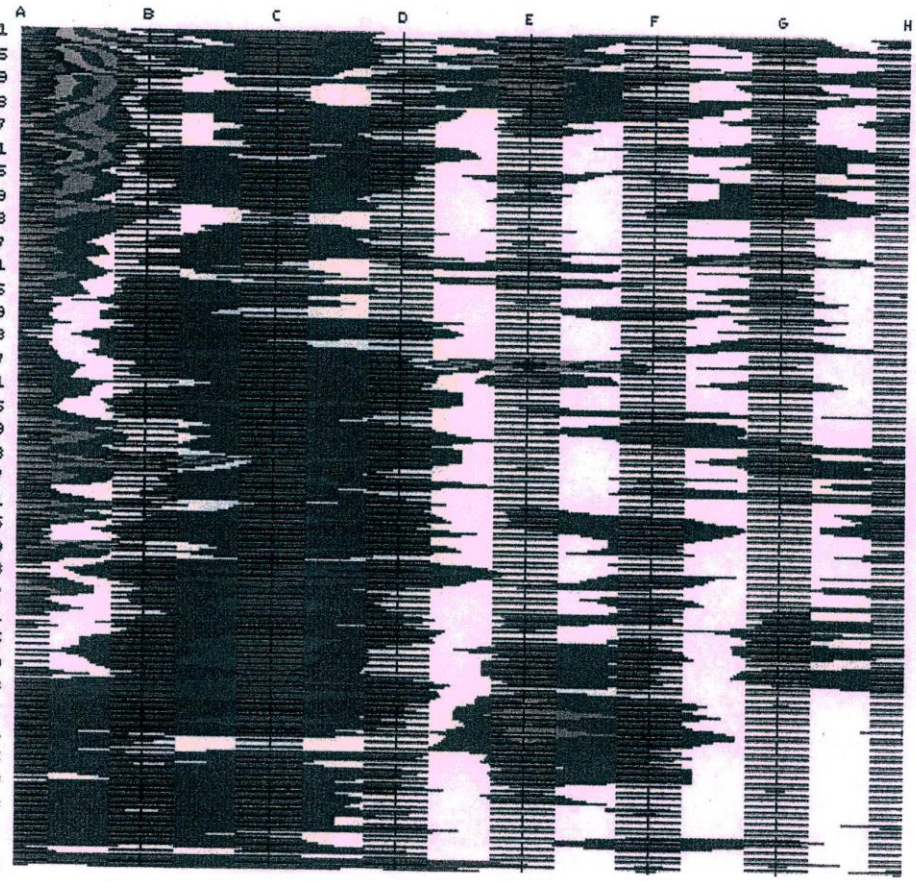

0.248		0.265	0.273
0.251	0.259	0.268	0.276
0.254	0.262	0.271	0.279

(C) 1995, Viewsonics

MEMO

October 9, 2001

To: Craig Porter, P.E., Assessment Team Project Manager

From: John Sagers, Senior Statistician

Subject: Statistical Time-Line Correlations of 4 Inch Corrosion Monitoring Tubes

A statistical analysis was performed on twelve 4-inch corrosion monitoring tubes to determine whether corrosion has taken place over a period of eight years, as indicated by a decrease in the average wall thickness of the tubes over time.

For each tube the average thickness was calculated from "thickness measurements recorded circumferentially every .25 inches… the fixturing device moves down .25 inches each revolution for over 550 revolutions and approximately 20,000 measurements per tube." [taken from annual inspection report of the four inch tubes]. The average thickness (in inches) for each tube is shown in the table below by year.

	Year of Observation							
Tube	1994	1995	1996	1997	1998	1999	2000	2001
HH505	0.233	0.249	0.243	0.245	0.245	0.247	0.244	0.245
LL475	0.233	0.242	0.244	0.245	0.245	0.247	0.241	0.242
PP105	0.227	0.239	0.244	0.237	0.239	0.241	0.236	0.251
PP125	0.223	0.235	0.232	0.235	0.236	0.239	0.233	0.249
PP265	0.224	0.236	0.232	0.233	0.234	0.237	0.231	0.246
PP375	0.233	0.244	0.239	0.239	0.239	0.242	0.236	0.254
PP495	0.237	0.250	0.243	0.247	0.243	0.250	0.243	0.246
PP85	0.236	0.244	0.243	0.248	0.246	0.249	0.246	0.261
T325	0.232	0.237	0.242	0.247	0.243	0.249	0.243	0.236
T365	0.230	0.250	0.244	0.252	0.245	0.251	0.245	0.239
V35	0.231	0.227	0.243	0.243	0.242	0.246	0.241	0.231
V45	0.241	0.238	0.247	0.247	0.249	0.251	0.247	0.238

The average thickness was plotted against the year of observation, and a Pearson's Correlation Coefficient (PCC) was calculated for each tube. A PCC can range from −1.0 to 1.0, with large negative values indicating strong negative correlations, values close to zero indicating no correlation, and values close to 1.0 indicating strong positive correlations. The first page of the attachment shows examples of four correlations over time (a strong negative, mild negative, no correlation, and mild positive).

For the purposes of this study, we are only interested in detecting negative correlations, indicating a decrease in wall thickness over time. The Pearson's Correlation Coefficients for each of the twelve corrosion monitotring tubes is listed below:

Tube	PCC
HH505	0.4346
LL475	0.4571
PP105	0.6205
PP125	0.7787
PP265	0.6797
PP375	0.5353
PP495	0.3035
PP85	0.8314
T325	0.3808
T365	0.2086
V35	0.3181
V45	0.2201

The correlations are shown graphically for each tube on pages 2-4 of the attachment.
The results show that none of the tubes show a negative correlation over time, meaning there is no evidence of corrosion over the last eight years on the monitoring tubes.

John Sagers

(Correlation Coefficient = −0.9489)

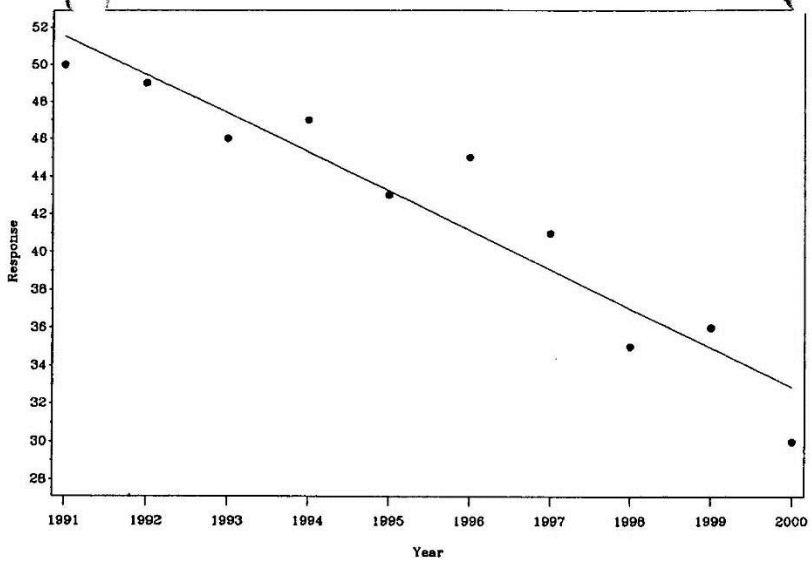

(Correlation Coefficient = −0.5158)

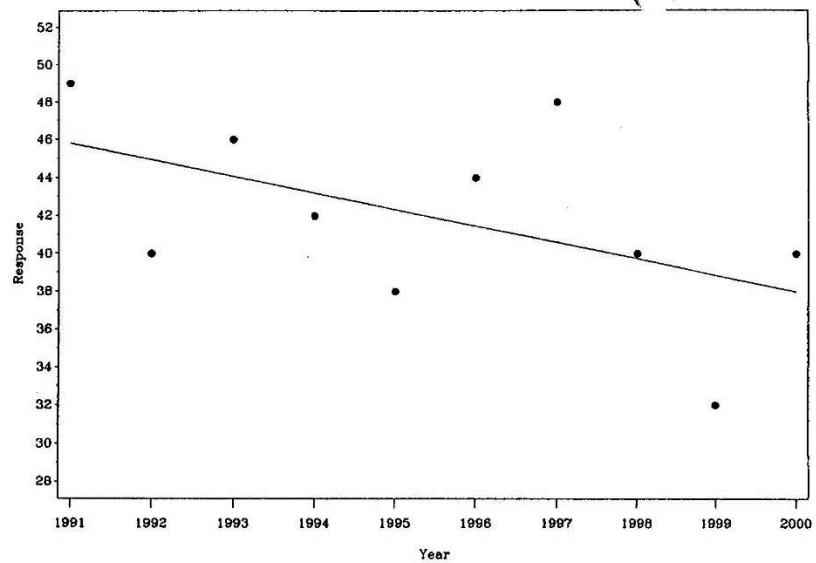

No Correlation

(Correlation Coefficient = −0.0020)

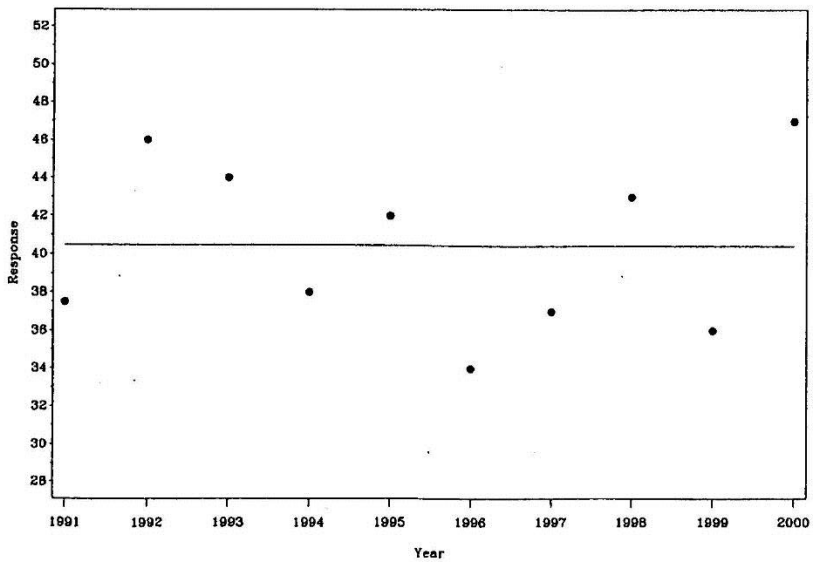

Mild Positive Correlation

(Correlation Coefficient = 0.5238)

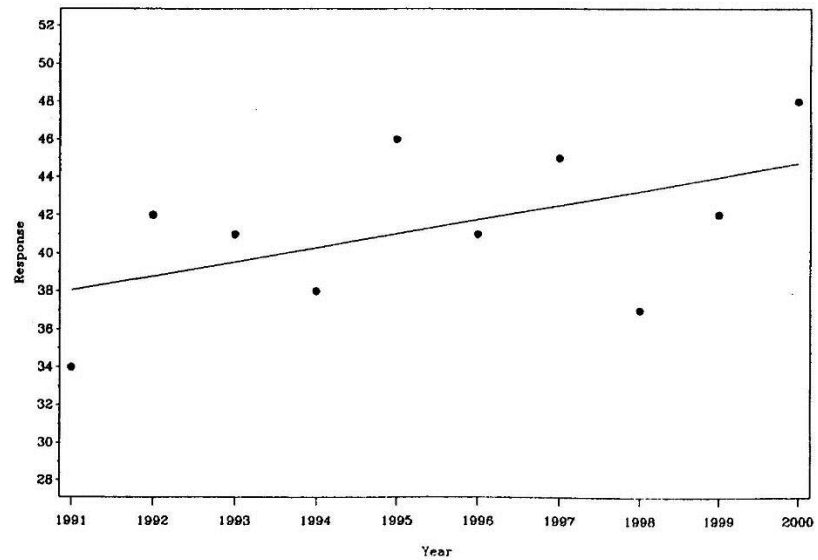

Avg Wall Thickness of Tube HH505
(Correlation Coefficient = 0.4346)

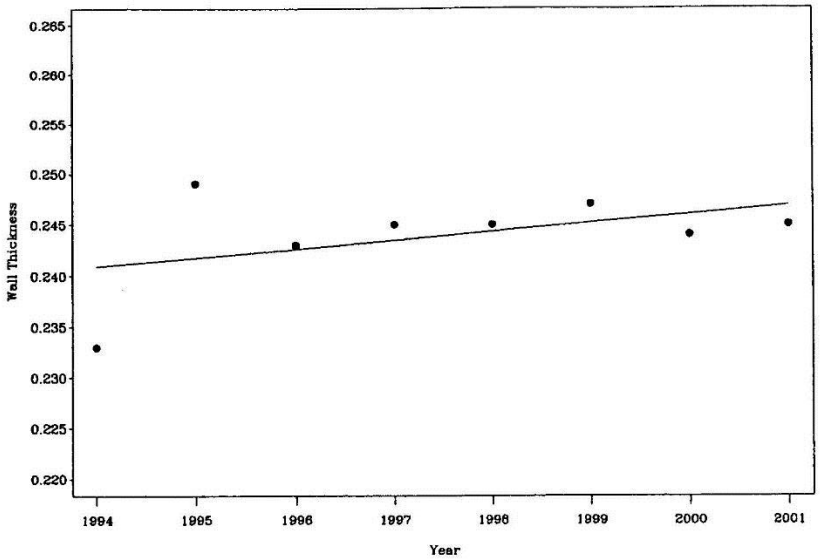

Avg Wall Thickness of Tube LL475
(Correlation Coefficient = 0.4571)

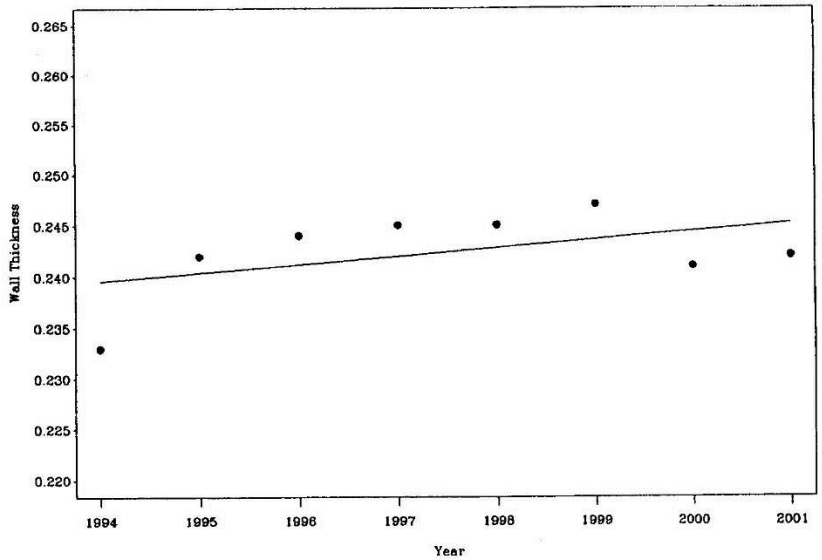

Avg Wall Thickness of Tube PP105
(Correlation Coefficient = 0.6205)

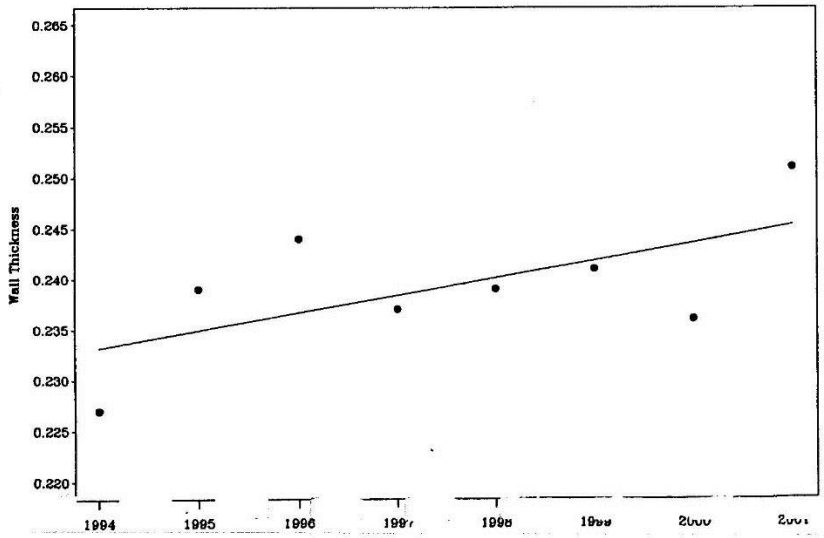

Avg Wall Thickness of Tube PP125
(Correlation Coefficient = 0.7786)

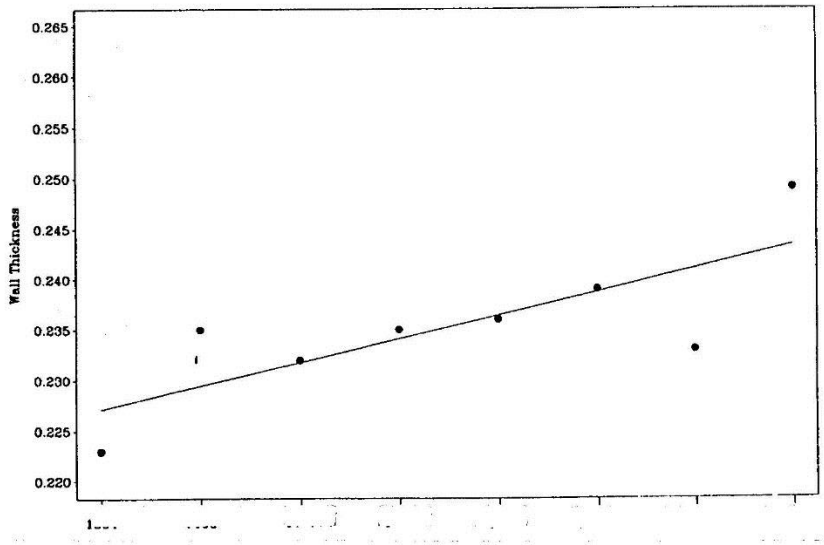

(Correlation Coefficient = 0.6797)

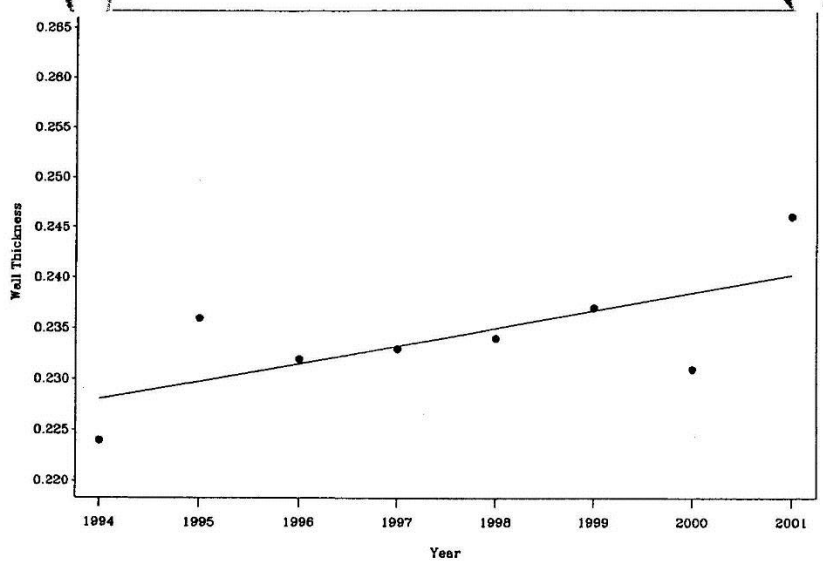

(Correlation Coefficient = 0.5353)

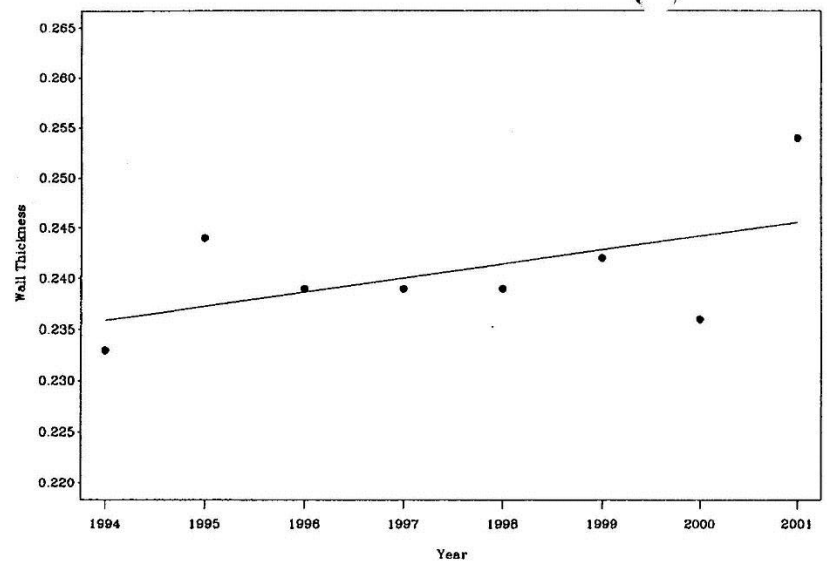

Avg Wall Thickness of Tube PP495

(Correlation Coefficient = 0.3035)

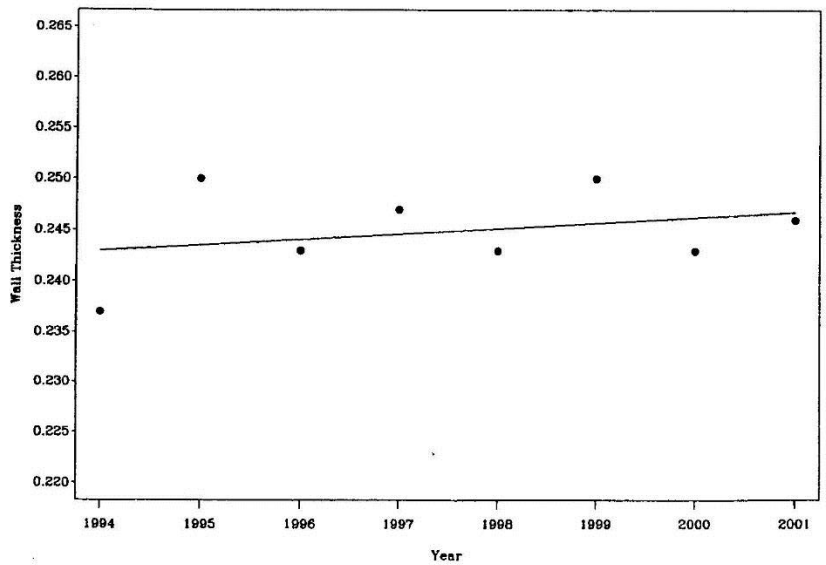

Avg Wall Thickness of Tube PP85

(Correlation Coefficient = 0.8314)

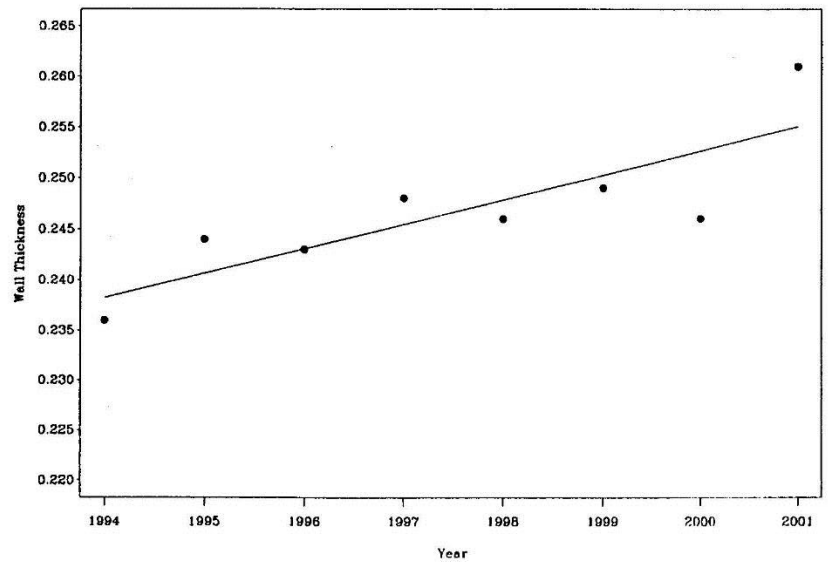

Avg Wall Thickness of Tube T325
(Correlation Coefficient = 0.3808)

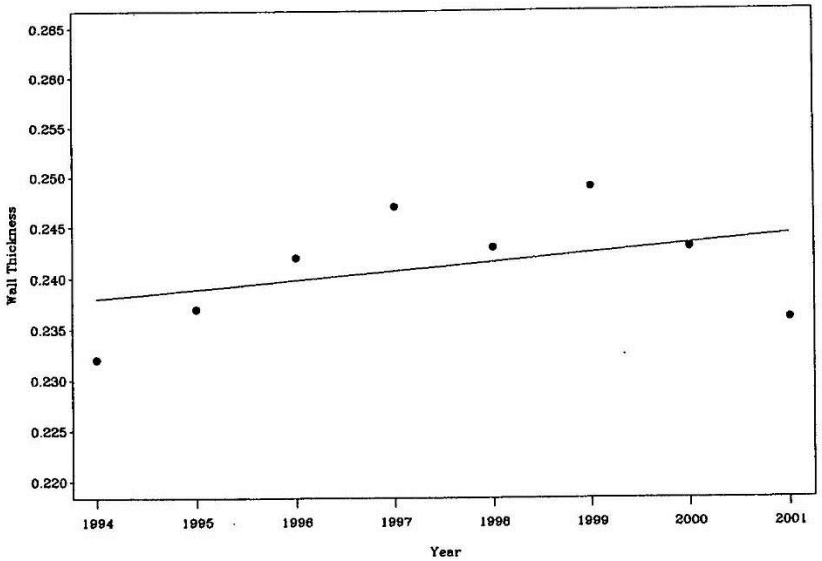

Avg Wall Thickness of Tube T365
(Correlation Coefficient = 0.2086)

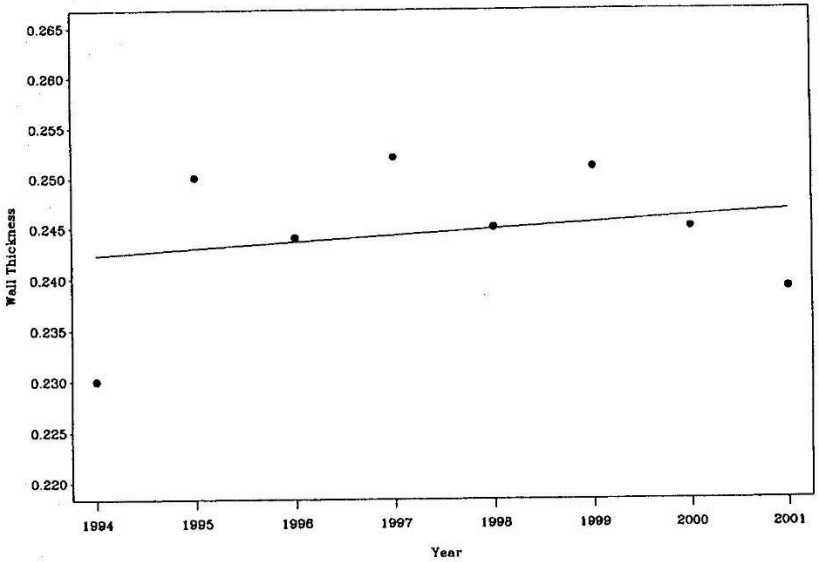

Avg Wall Thickness of Tube V35
(Correlation Coefficient = 0.3181)

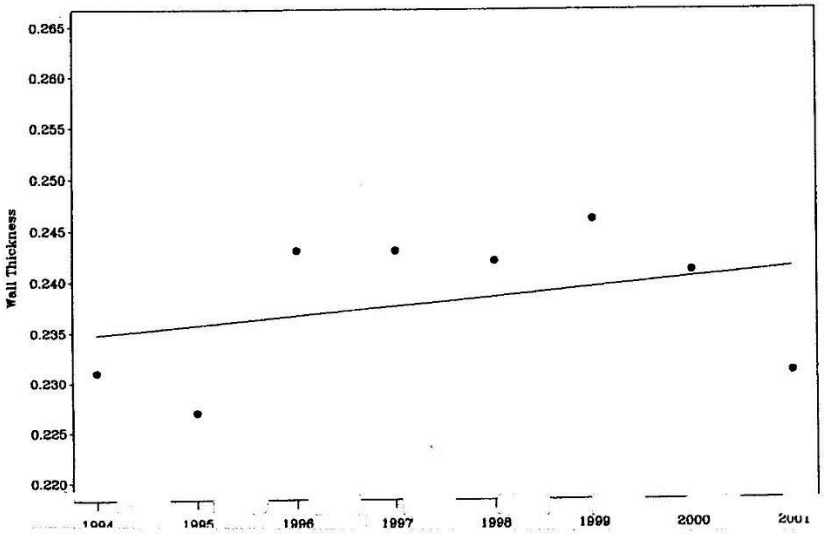

Avg Wall Thickness of Tube V45
(Correlation Coefficient = 0.2201)

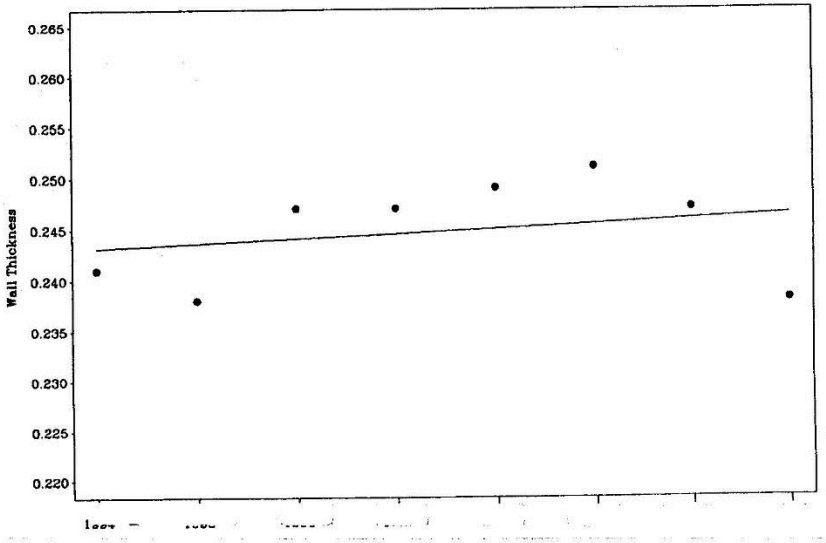

Attachment D-36

Photograph of RSWF Transport Cask

Radioactive Scrap Waste Facility
Estimated date of photo 1996

Attachment D-37

Illustration of Cargo Containers

895342 3

CPIU 558695 7
22G2

Attachment D-38

Photograph of Interim Storage Containers

Photo of Interim Storage Container
Photo taken April 2017

Photo of inside of Interim Storage Container
Estimated date of photo July 2004

Attachment D-39

Drawings of Interim Storage Containers (Example)

REVISIONS		
REV	DESCRIPTION	EFFECTIVE DATE:

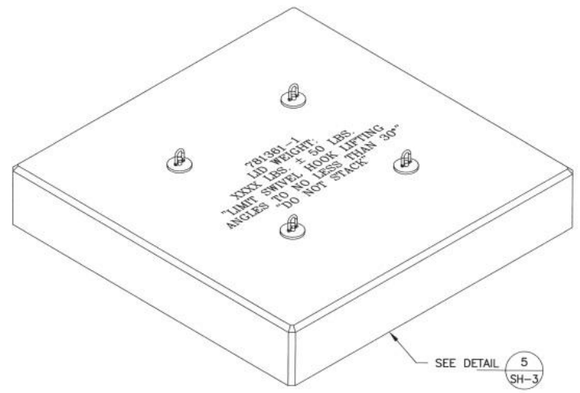

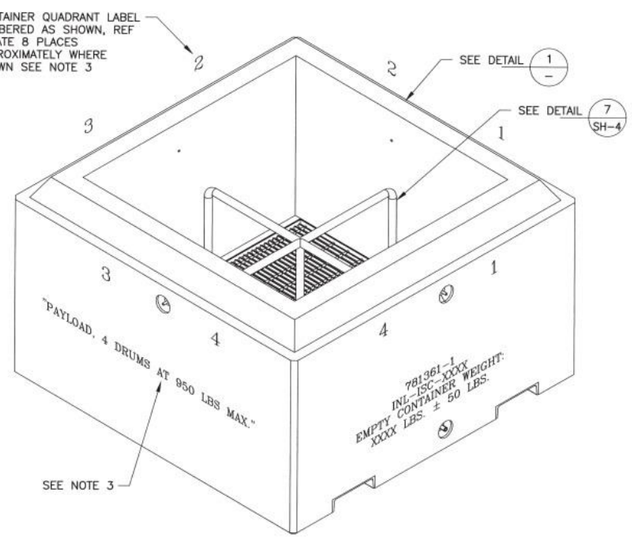

ISOMETRIC VIEW
NTS

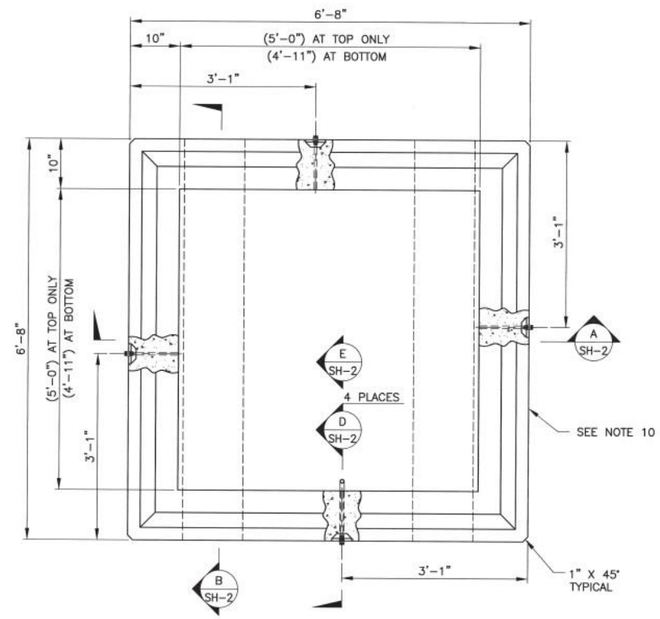

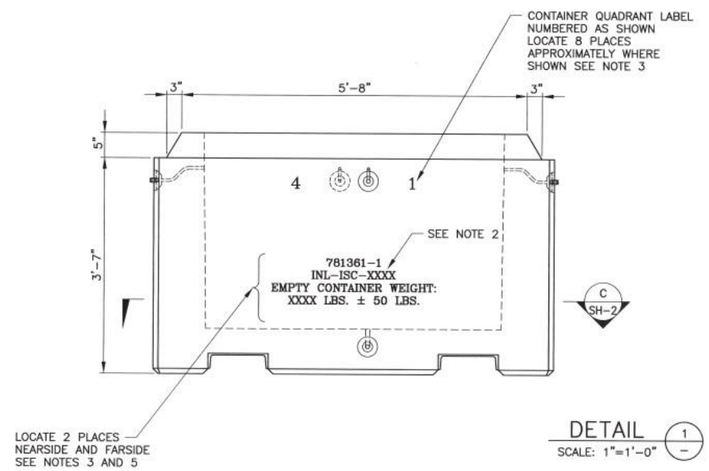

DETAIL 1 –
SCALE: 1"=1'-0"

NOTES

1. THIS DRAWING USED IN CONJUNCTION WITH SPECIFICATION SPC-1626.
2. SEQUENTIALLY NUMBER EACH CONTAINER IN ORDER OF FABRICATION WITH INL-ISC-0001 THRU INL-ISC-XXXX.
3. PAINT, LETTERING AND NUMBERING IN 2" HIGH CHARACTERS USING BLACK ENAMEL PAINT AS SPECIFIED IN SPC-1626.
4. PAINT, LETTERING AND NUMBERING IN 1" HIGH CHARACTERS USING BLACK ENAMEL PAINT AS SPECIFIED IN SPC-1626.
5. WEIGH EMPTY CONTAINER, LID AND STEEL INSERT. PAINT EMPTY WEIGHTS ON CONTAINER AND LID ± 50 LBS AS SPECIFIED.
6. PAINT ALL EXPOSED CARBON STEEL SURFACES USING AMERLOCK 2 PEARL GRAY, AS MANUFACTURED BY PPG PROTECTIVE AND MARINE COATINGS. FOLLOW ALL MANUFACTURER'S REQUIREMENTS, RECOMMENDATIONS AND INSTRUCTIONS FOR PROPER APPLICATION.
7. CONCRETE SHALL BE CLASS 45 WITH A MINIMUM 28-DAY COMPRESSIVE STRENGTH OF 4500 PSI.
8. REINFORCING STEEL SHALL CONFORM TO ASTM A615 GRADE 60.
9. IF NECESSARY, REBAR MAY BE SPLICED WITH CONTACT SPLICES OR, NON-CONTACT LAP SPLICES WITH BARS SPACED NO GREATER THAN 3 1/2" LATERALLY. SPLICES SHALL BE CLASS B, WITH A MINIMUM LENGTH OF 18". STAGGER SPLICES IN ADJACENT REINFORCING STEEL AT LEAST 24".
10. APPLY WATER PROOFING ON ALL CONCRETE SURFACES PRIOR TO PAINTING.
11. MAINTAIN MINIMUM CORNER DISTANCE OF 2'-0" AS SHOWN AND ENSURE A SYMMETRICAL INSTALLATION PATTERN.
12. MATERIAL SPECIFICATIONS, TESTING AND DIMENSIONAL TOLERANCES FOR FINAL ASSEMBLY TO BE PER SPC-1626.
13. PAINT "SYMMETRICALLY RIG FOR LIFTING" "LIFT ONLY WHEN EMPTY" APPROXIMATELY WHERE SHOWN PER NOTE 4.

PROFESSIONAL ENGINEER REGISTERED 6006 19 JUNE 2013 STATE OF IDAHO PETER J. MATONIS

SCALE: 1" = 1'-0"
SCALE: 1 1/2" = 1'-0"
SCALE: 3" = 1'-0"

REQUESTER:	PETE MATONIS
RESP ENGR:	PETE MATONIS
DESIGN:	PETE MATONIS
DRAWN:	ROB HERGESHEIMER
PROJECT NO.	NA
SPCL CODE	NA
FOR REVIEW/APPROVAL SIGNATURES SEE ECR NO.	614400
EFFECTIVE DATE:	6/18/13

Idaho National Laboratory

MFC
REMOTE-HANDLED TRU WASTE
INTERIM STORAGE CONTAINER (ISC)
FOR 55 GALLON DRUMS

SIZE	CAGE CODE	INDEX CODE NUMBER: AREA	TYPE	CL	ORIG	DWG NO.	REV
D	01MF3	273	9999	47	081	781361	

SCALE: NOTED
SHEET 1 OF 4

File: 781361.dwg
Path: H:\PETE-MATONIS
Date: 05/30/13 - 1:32 P.M. Layout Name: SH-1
RoHS

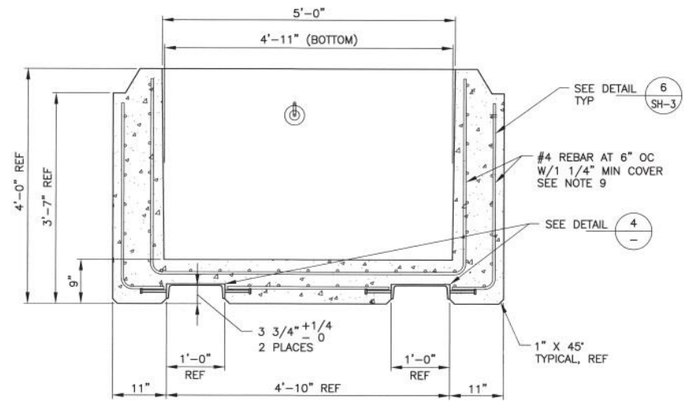

SECTION A SH-1
SCALE: 3"=1'-0"

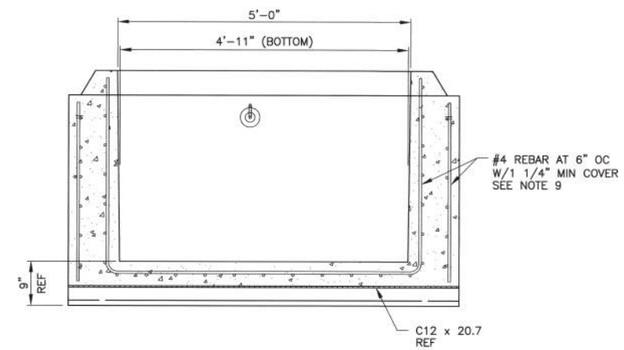

SECTION B SH-1
SCALE: 3"=1'-0"

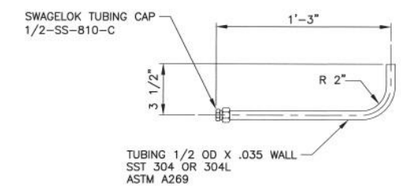

DETAIL 2 –
3"=1'-0"

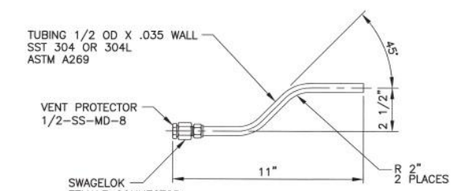

DETAIL 3 –
SCALE: 3"=1'-0"

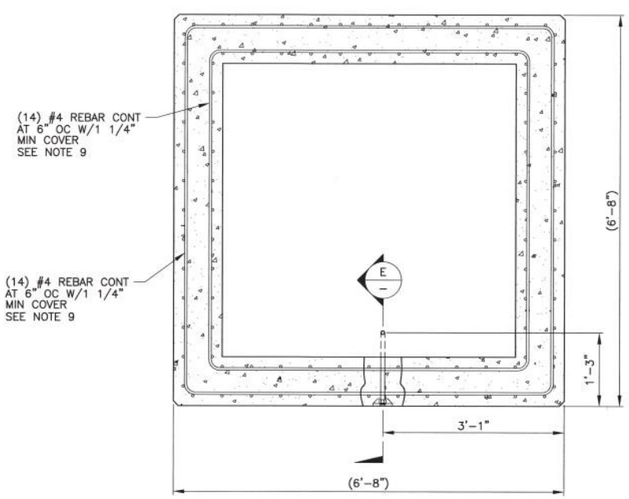

SECTION C SH-1
SCALE: 3"=1'-0"

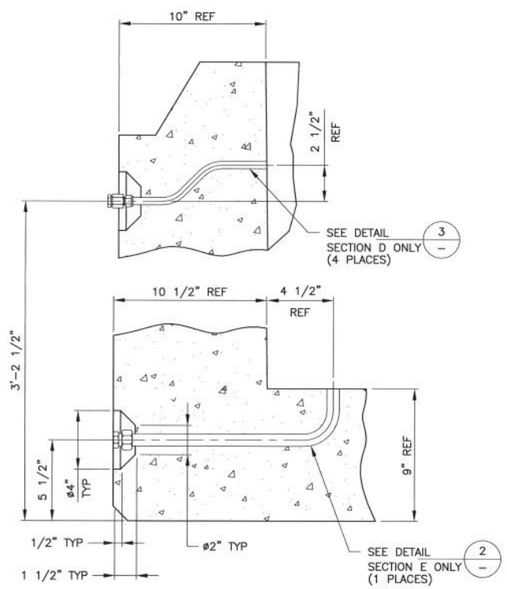

SECTION D SH-1
SCALE: 3"=1'-0"

SECTION E – E SH-1
SCALE: 3"=1'-0'

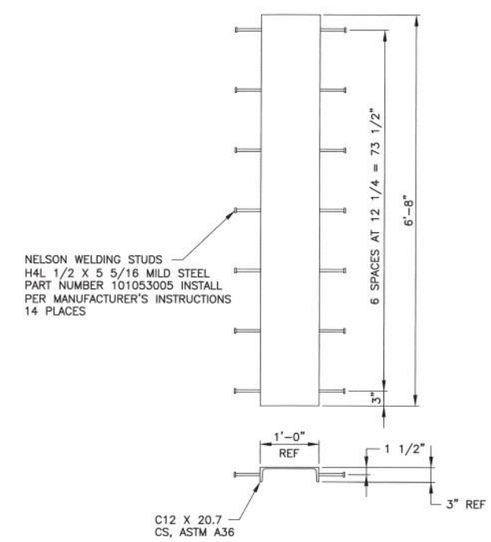

DETAIL 4 –
SCALE: 3"=1'-0"

SIZE	CADE CODE	INDEX CODE NUMBER					DWG- 781361	REV
		AREA	TYPE	G	ORIG			
D	01MF3	273	9999	47	081			
SCALE: NOTED							SHEET 2	

File: 781361.dwg
Path: M:\PETE-MATONIS
Date: 05/07/13 - 07:45 A.M. | Layout Name: SH-2
ID: RDHS

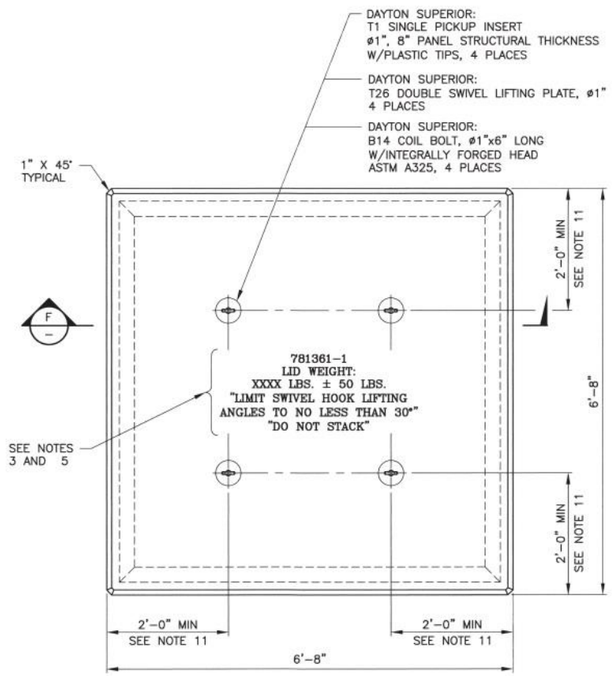

DETAIL (5 / SH-1)
SCALE: 1"=1'-0"

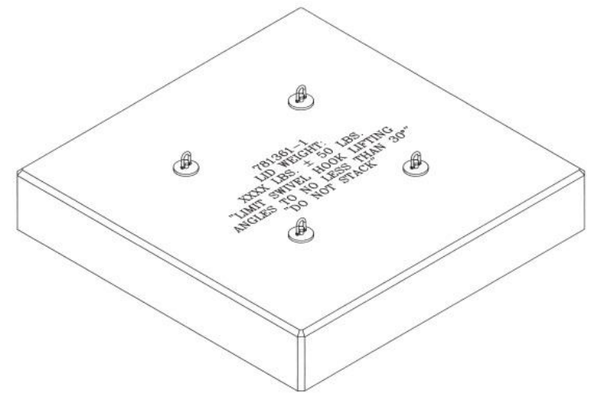

ISOMETRIC VIEW
NTS

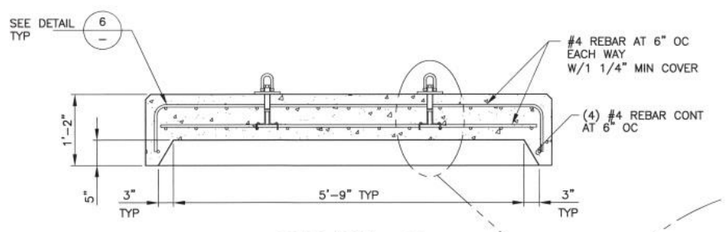

SECTION (F / –)
SCALE: 1"=1'-0"

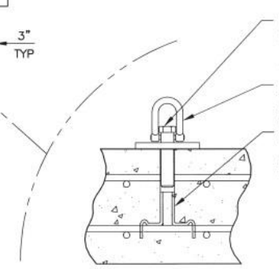

DAYTON SUPERIOR:
B14 COIL BOLT, ø1"x6" LONG
W/INTEGRALLY FORGED HEAD
ASTM A325, REF

DAYTON SUPERIOR:
T26 DOUBLE SWIVEL LIFTING PLATE, ø 1"
REF

DAYTON SUPERIOR:
T1 SINGLE PICKUP INSERT
ø 1", 8" PANEL STRUCTURAL THICKNESS
W/PLASTIC TIPS, REF

COMPONENTS SHALL BE
INSTALLED IN STRICT ACCORDANCE
WITH MANUFACTURERS
INSTRUCTIONS, REQUIREMENTS
AND RECOMMENDATIONS
SEE NOTE 11

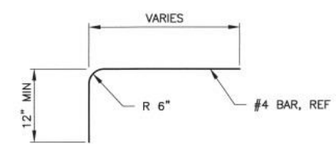

DETAIL (6 / – ; 6 / SH-2)
NTS

SIZE	CAGE CODE	INDEX CODE NUMBER AREA	TYPE	CL	DISC	DWG-781361	REV
D	01MF3	273	9999	47	081		
SCALE: NOTED						SHEET 3	

File: 781361.dwg
Path: H:\PETE-MATCHES
Date: 05/30/13 – 11:55 AM | Layout Name: SH-3
ID: RDHS
FMT-D2-REV 4 (ML)

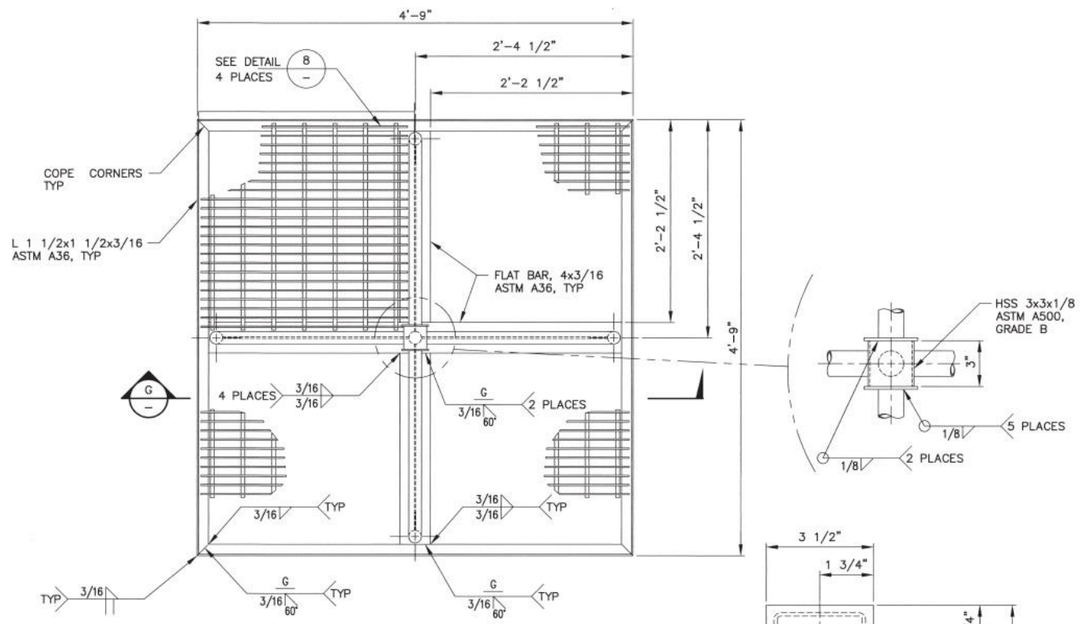

DETAIL 7
SCALE: 1 1/2"=1'-0" SH-1

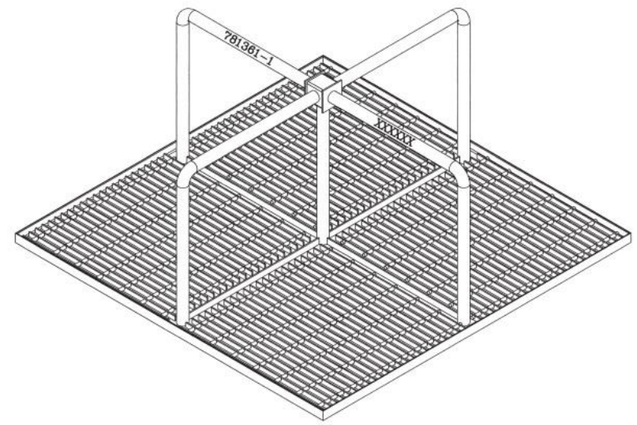

ISOMETRIC VIEW
NTS

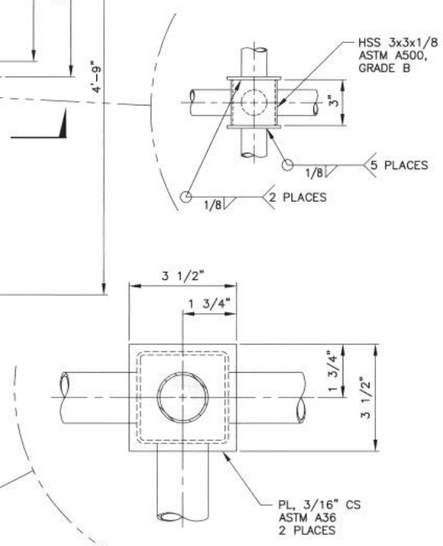

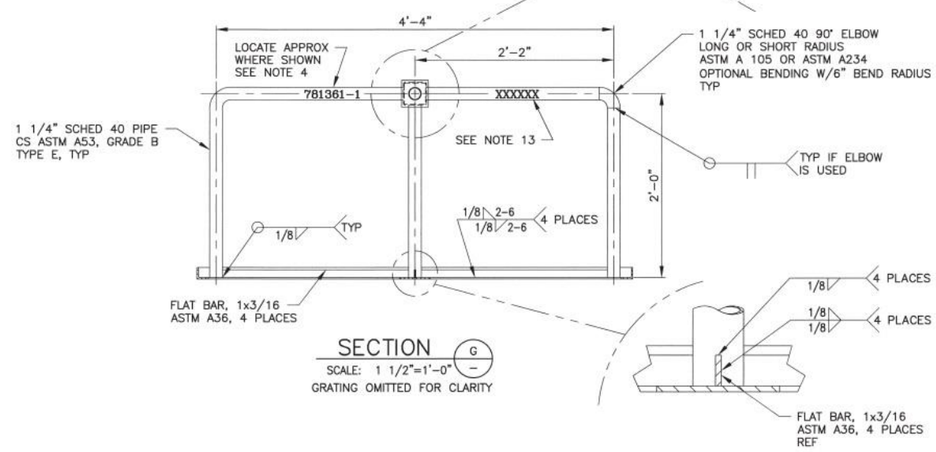

SECTION G
SCALE: 1 1/2"=1'-0"
GRATING OMITTED FOR CLARITY

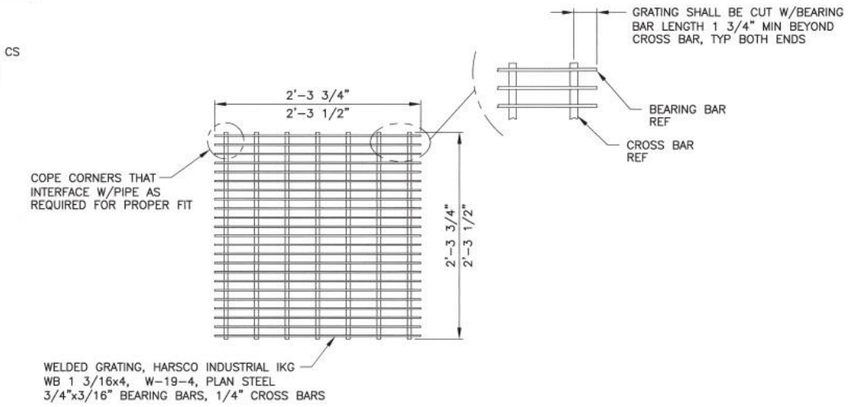

DETAIL 8
SCALE: 1 1/2"=1'-0"

SIZE	CAGE CODE	INDEX CODE NUMBER				DWG-	REV
		AREA	TYPE	CL	ORIG		
D	01MF3	273	9999	47	081	781361	
SCALE: NOTED						SHEET 4	

File: 781361.dwg Path: H:\PETE-MATONIS
Date: 05/07/13 - 08:50 A.M. Layout Name: SH-4
ID: RDHS

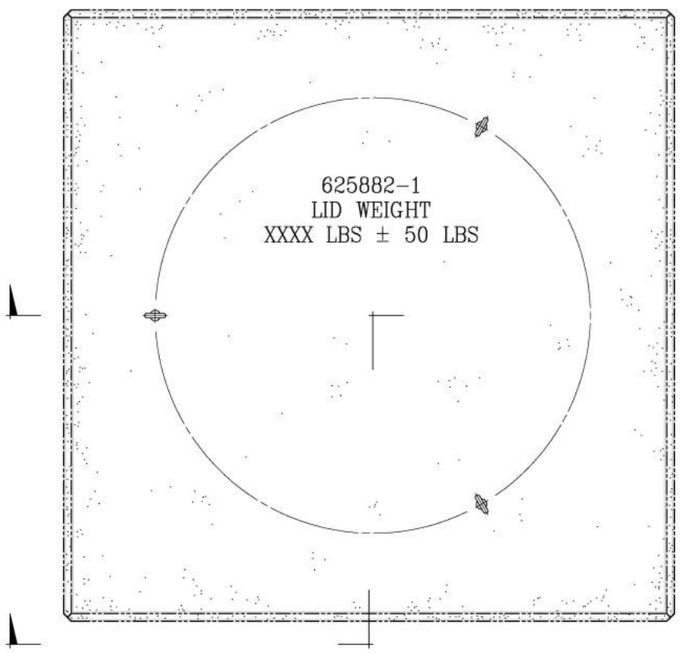

INTERIM STORAGE CONTAINER LID PLAN
1 1/2"=1'-0"

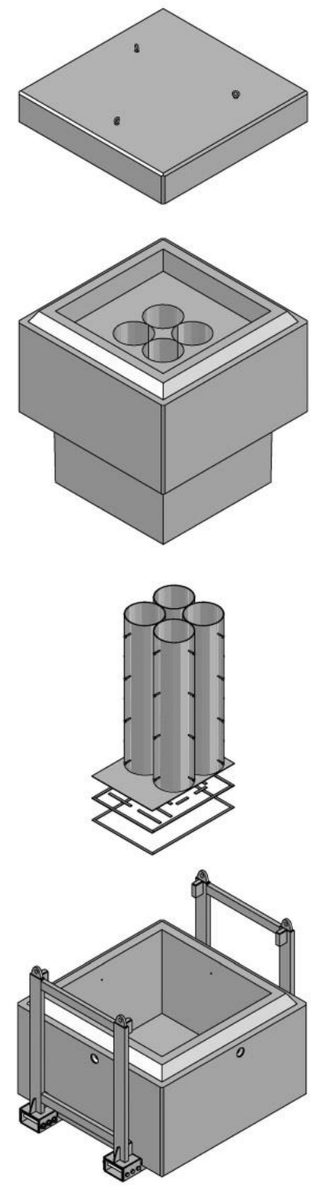

INTERIM STORAGE CONTAINER ISOMETRIC
REFERENCE ONLY

REV	DATE	DESCRIPTION

REVISION HISTORY

PROFESSIONAL ENGINEER REGISTERED 11371 STATE OF IDAHO TATE LYBBERT

SCALE: 1 1/2" = 1'-0"

DESIGN PHASE:	AFC
QUALITY LEVEL:	3
HORIZONTAL SCALE:	NOTED
VERTICAL SCALE:	NA

FOR DRAWING INDEX SEE DRAWING NO. 754638

INITIALS/DATE APPLY TO CURRENT RELEASE ONLY

	INITIALS:	DATE:
DESIGN: T.O. LYBBERT	Tate Lybbert 2008.03.27 14:52:19 -06'00'	
DRAFTER: B.E. RHODES	Barry E. Rhodes 2008.03.27 11:04:14 -06'00'	
DRAFTING CHECK: G.K. MACE	Gene Mace 2008.03.27 11:37:27 -06'00'	
TECHNICAL CHECK: EGS	–	–
ENG GROUP SUPERVISOR: S.W. SHEPHERD	William H. Reed 2008.03.27 15:15:09 -06'00'	
DESIGN LEAD: S.L. PALMER	Stanley L. Palmer 2008.03.27 14:41:36 -06'00'	

Idaho Cleanup Project CH2MHILL

754639
INTERIM STORAGE CONTAINER
MODIFICATION FOR
HFEF-5 CANS

INTERIM STORAGE CONTAINER PLAN AND ISOMETRIC

PROJECT NUMBER: 23048

EFFECTIVE DATE: 3/27/2008

INDEX CODE NUMBER			
AREA	TYPE	A	DWG
200	9999	47	136

SIZE D DWG- 754640 REV

DRF NO. 322214 SHEET S-1

Attachment D-40

Drawing of Topography for North Fenced Area
and RSWF Staging/Storage Area

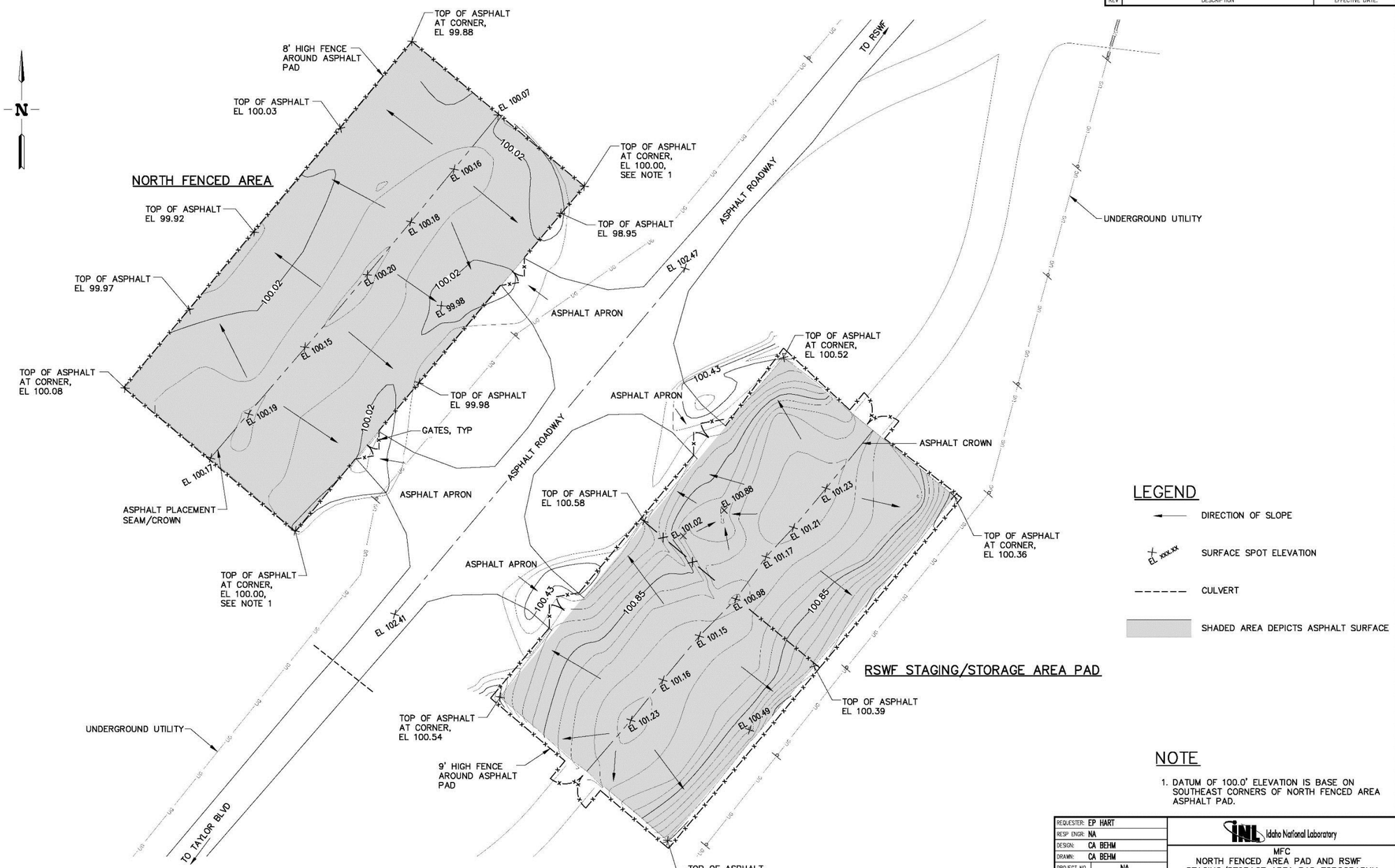

RSWF STAGING/STORAGE AREA PADS

SITE PLAN

CONTOUR INTERVAL = 0.083'

REVISIONS		
REV	DESCRIPTION	EFFECTIVE DATE:

REQUESTER:	EP HART
RESP ENGR:	NA
DESIGN:	CA BEHM
DRAWN:	CA BEHM
PROJECT NO.	NA
SPCL CODE:	AS-BUILT
FOR REVIEW/APPROVAL SIGNATURES SEE ECR NO.	649960
EFFECTIVE DATE:	4-25-17

Idaho National Laboratory

MFC
NORTH FENCED AREA PAD AND RSWF STAGING/STORAGE AREA PAD TOPOGRAPHY

SITE PLAN

SIZE	CAGE CODE	INDEX CODE NUMBER				DWG NO.	REV
		AREA	TYPE	SI	CODE		
D	01MF3	273	0100	02	081	792948	

SCALE: 1" = 20.0' SHEET 1 OF 1

File: 792948.dwg
Path: P:\A-MFC\RSWF\Storage pads\ed_hart\North_pad
Layout Name: 792948
Date: 04/25/17 - 1:59 P.M.
ID: ABE