APPENDIX B

Emission Factors

QB Corporation

TABLE 1
WOOD COMBUSTION EMISSION FACTORS
QB Corporation, Salmon, Idaho

	Wood	
Criteria Air Pollutants	**lb/MMBtu**	**Source**
PM (Dry Wood/Mech. Collector)	0.317	AP-42 Tbl 1.6-1 (9/03)
PM-10 (Dry Wood/Mech. Collector)	0.287	AP-42 Tbl 1.6-1 (9/03)
SO2	0.025	AP-42 Tbl 1.6-2 (9/03)
NOx	0.22	AP-42 Tbl 1.6-2 (9/03)
CO	0.6	AP-42 Tbl 1.6-2 (9/03)
VOC	0.017	AP-42 Tbl 1.6-3 (9/03)
Lead	4.80E-05	AP-42 Tbl 1.6-4 (9/03)
Toxic Air Pollutants Non-Carcinogenic		
Acetone	1.90E-04	AP-42 Tbl 1.6-3 (9/03)
Acrolein	4.00E-03	AP-42 Tbl 1.6-3 (9/03)
Antimony	7.90E-06	AP-42 Tbl 1.6-4 (9/03)
Barium	1.70E-04	AP-42 Tbl 1.6-4 (9/03)
2-Butanone (MEK)	5.40E-06	AP-42 Tbl 1.6-3 (9/03)
Chlorine	7.90E-04	AP-42 Tbl 1.6-3 (9/03)
Chlorobenzene	3.30E-05	AP-42 Tbl 1.6-3 (9/03)
2-Chlorophenol	2.40E-08	AP-42 Tbl 1.6-3 (9/03)
Chromium	2.10E-05	AP-42 Tbl 1.6-4 (9/03)
Cobalt	6.50E-06	AP-42 Tbl 1.6-4 (9/03)
Copper	4.90E-05	AP-42 Tbl 1.6-4 (9/03)
Crotonaldehyde	9.90E-06	AP-42 Tbl 1.6-3 (9/03)
1,2-Dichloropropane	3.30E-05	AP-42 Tbl 1.6-3 (9/03)
Ethylbenzene	3.10E-05	AP-42 Tbl 1.6-3 (9/03)
Fluorene	3.40E-06	AP-42 Tbl 1.6-3 (9/03)
Hydrogen Chloride	1.90E-02	AP-42 Tbl 1.6-3 (9/03)
Iron	9.90E-04	AP-42 Tbl 1.6-4 (9/03)
Manganese	1.60E-03	AP-42 Tbl 1.6-4 (9/03)
Mercury	3.50E-06	AP-42 Tbl 1.6-4 (9/03)
Methyl Chloroform (1,1,1 Trichloroethane)	3.10E-05	AP-42 Tbl 1.6-3 (9/03)
Molybdenum	2.10E-06	AP-42 Tbl 1.6-4 (9/03)
Napthalene	9.70E-05	AP-42 Tbl 1.6-3 (9/03)
Pentachlorophenol	5.10E-08	AP-42 Tbl 1.6-3 (9/03)
Phenol	5.10E-05	AP-42 Tbl 1.6-3 (9/03)
Phosphorous	2.70E-05	AP-42 Tbl 1.6-4 (9/03)
Propionaldehyde	6.10E-05	AP-42 Tbl 1.6-3 (9/03)
Selenium	2.80E-06	AP-42 Tbl 1.6-4 (9/03)
Silver	1.70E-03	AP-42 Tbl 1.6-4 (9/03)
Tin	2.30E-05	AP-42 Tbl 1.6-4 (9/03)
Toluene	9.20E-04	AP-42 Tbl 1.6-3 (9/03)
Vanadium	9.80E-07	AP-42 Tbl 1.6-4 (9/03)
o-Xylene	2.50E-05	AP-42 Tbl 1.6-3 (9/03)
Yttrium	3.00E-07	AP-42 Tbl 1.6-4 (9/03)
Zinc	4.20E-04	AP-42 Tbl 1.6-4 (9/03)

TABLE 1 (Cont.)
WOOD COMBUSTION EMISSION FACTORS
QB Corporation, Salmon, Idaho

Toxic Air Pollutants	Wood	
Carcinogenic	lb/MMBtu	Source
Acetaldehyde	8.30E-04	AP-42 Tbl 1.6-3 (9/03)
Arsenic (Controlled)	1.18E-05	AP-42 Tbl 1.6-4 (9/03)
Benzene	4.20E-03	AP-42 Tbl 1.6-3 (9/03)
Benzo(a)pyrene	2.60E-06	AP-42 Tbl 1.6-3 (9/03)
Beryllium	1.10E-06	AP-42 Tbl 1.6-4 (9/03)
Bis(2-ethylhexyl)phthalate	4.70E-08	AP-42 Tbl 1.6-3 (9/03)
Cadmium	4.10E-06	AP-42 Tbl 1.6-4 (9/03)
Carbon Tetrachloride	4.50E-05	AP-42 Tbl 1.6-3 (9/03)
Chloroform	2.80E-05	AP-42 Tbl 1.6-3 (9/03)
Chromium, Hexavalent	3.50E-06	AP-42 Tbl 1.6-4 (9/03)
1,2-Dichloroethane	2.90E-05	AP-42 Tbl 1.6-3 (9/03)
Heptachlorodibenzo-p-dioxins	2.03E-09	AP-42 Tbl 1.6-3 (9/03)
Heptachlorodibenzo-p-furans	2.35E-10	AP-42 Tbl 1.6-3 (9/03)
Hexachlorodibenzo-p-dioxins	1.29E-08	AP-42 Tbl 1.6-3 (9/03)
Hexachlorodibenzo-p-Furans	2.84E-10	AP-42 Tbl 1.6-3 (9/03)
Octachlorodibenzo-p-dioxins	1.10E-09	AP-42 Tbl 1.6-3 (9/03)
Octachlorodibenzo-p-furans	8.82E-11	AP-42 Tbl 1.6-3 (9/03)
Pentachlorodibenzo-p-dioxins	1.50E-09	AP-42 Tbl 1.6-3 (9/03)
Pentachlorodibenzo-p-furans	4.22E-10	AP-42 Tbl 1.6-3 (9/03)
2,3,7,8-Tetrachlorodibenzo-p-dioxins	8.58E-12	AP-42 Tbl 1.6-3 (9/03)
Tetrachlorodibenzo-p-dioxins	4.69E-10	AP-42 Tbl 1.6-3 (9/03)
2,3,7,8-Tetrachlorodibenzo-p-furans	9.00E-11	AP-42 Tbl 1.6-3 (9/03)
Tetrachlorodibenzo-p-furans	7.54E-10	AP-42 Tbl 1.6-3 (9/03)
Formaldehyde[c]	4.40E-03	AP-42 Tbl 1.6-3 (9/03)
Nickel[c]	3.30E-05	AP-42 Tbl 1.6-4 (9/03)
Polyaromatic Hydrocarbons (PAH or POM)		
Benzo(a)anthracene	6.50E-08	AP-42 Tbl 1.6-3 (9/03)
Benzo(b)fluoranthene	1.00E-07	AP-42 Tbl 1.6-3 (9/03)
Benzo(k)fluoranthene	3.60E-08	AP-42 Tbl 1.6-3 (9/03)
Chrysene	3.80E-08	AP-42 Tbl 1.6-3 (9/03)
Dibenzo(a,h)anthracene	9.10E-09	AP-42 Tbl 1.6-3 (9/03)
Indeno(1,2,3-cd)pyrene	8.70E-08	AP-42 Tbl 1.6-3 (9/03)
Benzo(a)pyrene	2.60E-06	AP-42 Tbl 1.6-3 (9/03)
2,3,7,8-Tetrachlorodibenzo-p-dioxin	8.60E-12	AP-42 Tbl 1.6-3 (9/03)
2,4,6-Trichlotophenol	2.20E-08	AP-42 Tbl 1.6-3 (9/03)
Vinyl Chloride	1.80E-05	AP-42 Tbl 1.6-3 (9/03)

TABLE 2
WOOD FIRED BOILER EMISSION ESTIMATES
QB Corporation, Salmon, Idaho

Boiler Operating Parameters		
Manufacturer	Industial HRT Design	
Model	3-1800-150	
Operating Pressure (psig)	135	
Output (B.H.P.)	270	
Output (P.P.H. Steam)	8,910	@135 PSIG and 212° F Feedwater
Potential Input (MMBtu/hr)	12.3	
Potential Annual Input (MMBtu/yr)	107,748.00	
Limited Annual Input (MMBtu/hr)	55,745.45	
Exhaust Flow (dscf/m)	3,069	@ 9,240 dscf/MMBtu and 8% Oxygen
Operating Hours (hr/yr)	8,760	
Maximum Fuel Use (tons/hr)	0.7593	8,100 Btu/lb at 10% Moisture
Potential Fuel Use (tons/yr)	6,651.11	

Criteria Pollutants	Emission Factors lb/MMBtu	Potential Emission Rate (lb/hr)	Potential Emission Rate (tons/yr)	Limited Emission Rate (lb/hr)	Limited Emission Rate (tons/yr)
PM (Dry Wood, Mech. Collector)	.08 gr/dscf	2.1044	9.217	2.104	4.769
PM-10 (Dry Wood, Mech. Collector)	0.287	3.5301	15.462	3.530	7.999
SO2	0.025	0.3075	1.347	0.308	0.697
NOx	0.220	2.706	11.852	2.706	6.132
CO	0.6	7.38	32.324	7.380	16.724
VOC	0.017	0.2091	0.916	0.209	0.474
Lead	4.80E-05	5.904E-04	2.586E-03	0.001	0.001

Toxic Air Pollutants Non-Carcinogenic	Emission Factors lb/MMBtu	Potential Emission Rate (lb/hr)	Potential Emission Rate (tons/yr)	Limited Emission Rate (lb/hr)	Limited Emission Rate (tons/yr)
Acetone	1.90E-04	2.337E-03	1.024E-02	2.337E-03	5.296E-03
Acrolein	4.00E-03	4.920E-02	2.155E-01	4.920E-02	1.115E-01
Antimony	7.90E-06	9.717E-05	4.256E-04	9.717E-05	2.202E-04
Barium	1.70E-04	2.091E-03	9.159E-03	2.091E-03	4.738E-03
2-Butanone (MEK)	5.40E-06	6.642E-05	2.909E-04	6.642E-05	1.505E-04
Chlorine	7.90E-04	9.717E-03	4.256E-02	9.717E-03	2.202E-02
Chlorobenzene	3.30E-05	4.059E-04	1.778E-03	4.059E-04	9.198E-04
2-Chlorophenol	2.40E-08	2.952E-07	1.293E-06	2.952E-07	6.689E-07
Chromium	2.10E-05	2.583E-04	1.131E-03	2.583E-04	5.853E-04
Cobalt	6.50E-06	7.995E-05	3.502E-04	7.995E-05	1.812E-04
Copper	4.90E-05	6.027E-04	2.640E-03	6.027E-04	1.366E-03
Crotonaldehyde	9.90E-06	1.218E-04	5.334E-04	1.218E-04	2.759E-04
1,2-Dichloropropane	3.30E-05	4.059E-04	1.778E-03	4.059E-04	9.198E-04
Ethylbenzene	3.10E-05	3.813E-04	1.670E-03	3.813E-04	8.641E-04
Fluorene	3.40E-06	4.182E-05	1.832E-04	4.182E-05	9.477E-05
Hydrogen Chloride	1.90E-02	2.337E-01	1.024E+00	2.337E-01	5.296E-01
Iron	9.90E-04	1.218E-02	5.334E-02	1.218E-02	2.759E-02
Manganese	1.60E-03	1.968E-02	8.620E-02	1.968E-02	4.460E-02
Mercury	3.50E-06	4.305E-05	1.886E-04	4.305E-05	9.755E-05
Methyl Chloroform (1,1,1 Trichloroethane)	3.10E-05	3.813E-04	1.670E-03	3.813E-04	8.641E-04
Molybdenum	2.10E-06	2.583E-05	1.131E-04	2.583E-05	5.853E-05
Napthalene	9.70E-05	1.193E-03	5.226E-03	1.193E-03	2.704E-03
Pentachlorophenol	5.10E-08	6.273E-07	2.748E-06	6.273E-07	1.422E-06
Phenol	5.10E-05	6.273E-04	2.748E-03	6.273E-04	1.422E-03
Phosphorous	2.70E-05	3.321E-04	1.455E-03	3.321E-04	7.526E-04
Propionaldehyde	6.10E-05	7.503E-04	3.286E-03	7.503E-04	1.700E-03
Selenium	2.80E-06	3.444E-05	1.508E-04	3.444E-05	7.804E-05
Silver	1.70E-03	2.091E-02	9.159E-02	2.091E-02	4.738E-02
Tin	2.30E-05	2.829E-04	1.239E-03	2.829E-04	6.411E-04
Toluene	9.20E-04	1.132E-02	4.956E-02	1.132E-02	2.564E-02
Vanadium	9.80E-07	1.205E-05	5.280E-05	1.205E-05	2.732E-05
o-Xylene	2.50E-05	3.075E-04	1.347E-03	3.075E-04	6.968E-04
Yttrium	3.00E-07	3.690E-06	1.616E-05	3.690E-06	8.362E-06
Zinc	4.20E-04	5.166E-03	2.263E-02	5.166E-03	1.171E-02

TABLE 2 (cont.)
WOOD FIRED BOILER EMISSION ESTIMATES
QB Corporation, Salmon, Idaho

Toxic Air Pollutants Carcinogenic	Emission Factors lb/MMBtu	Potential Emission Rate (lb/hr)	Potential Emission Rate (tons/yr)	Limited Emission Rate (lb/hr)	Limited Emission Rate (tons/yr)
Acetaldehyde	8.30E-04	1.021E-02	4.472E-02	5.282E-03	2.313E-02
Arsenic (controlled)	1.180E-05	1.452E-04	6.358E-04	7.510E-05	3.289E-04
Benzene	4.20E-03	5.166E-02	2.263E-01	2.673E-02	1.171E-01
Benzo(a)pyrene	2.60E-06	3.198E-05	1.401E-04	1.655E-05	7.247E-05
Beryllium	1.10E-06	1.353E-05	5.926E-05	7.000E-06	3.066E-05
Bis(2-ethylhexyl)phthalate	4.70E-08	5.781E-07	2.532E-06	2.991E-07	1.310E-06
Cadmium	4.10E-06	5.043E-05	2.209E-04	2.609E-05	1.143E-04
Carbon Tetrachloride	4.50E-05	5.535E-04	2.424E-03	2.864E-04	1.254E-03
Chloroform	2.80E-05	3.444E-04	1.508E-03	1.782E-04	7.804E-04
Chromium, Hexavalent	3.50E-06	4.305E-05	1.886E-04	2.227E-05	9.755E-05
1,2-Dichloroethane	2.90E-05	3.567E-04	1.562E-03	1.845E-04	8.083E-04
Dioxins and Furans (TEQ)	1.76E-11	2.165E-10	9.482E-10	1.120E-10	4.906E-10
2,3,7,8-Tetrachlorodibenzo-p-dioxins (1.00)	8.60E-12	1.058E-10	4.633E-10	5.473E-11	2.397E-10
2,3,7,8-Tetrachlorodibenzo-p-furans (0.10)	9.00E-11	1.107E-09	4.849E-09	5.727E-10	2.509E-09
Formaldehyde	4.40E-03	5.4120E-02	2.370E-01	2.800E-02	1.226E-01
Nickel	3.30E-05	4.059E-04	1.778E-03	2.100E-04	9.198E-04
Polyaromatic Hydrocarbons (PAH or POM)	2.935E-06	3.610E-05	1.581E-04	1.868E-05	8.181E-05
Benzo(a)anthracene	6.50E-08	7.995E-07	3.502E-06	4.136E-07	1.812E-06
Benzo(b)fluoranthene	1.00E-07	1.230E-06	5.387E-06	6.364E-07	2.787E-06
Benzo(k)fluoranthene	3.60E-08	4.428E-07	1.939E-06	2.291E-07	1.003E-06
Chrysene	3.80E-08	4.674E-07	2.047E-06	2.418E-07	1.059E-06
Dibenzo(a,h)anthracene	9.10E-09	1.119E-07	4.903E-07	5.791E-08	2.536E-07
Indeno(1,2,3-cd)pyrene	8.70E-08	1.070E-06	4.687E-06	5.536E-07	2.425E-06
Benzo(a)pyrene	2.60E-06	3.198E-05	1.401E-04	1.655E-05	7.247E-05
2,3,7,8-Tetrachlorodibenzo-p-dioxin	8.60E-12	1.058E-10	4.633E-10	5.473E-11	2.397E-10
2,4,6-Trichlotophenol	2.20E-08	2.706E-07	1.185E-06	1.400E-07	6.132E-07
Vinyl Chloride	1.80E-05	2.214E-04	9.697E-04	1.145E-04	5.017E-04

TABLE 3
CYCLONE EMISSIONS
QB Corporation, Salmon, Idaho

Wood Waste Transfer Emissions	
Total Throughput (lb/hr)	750
Total PM Emission Rate (lb/hr)	2.3892
Total PM-10 Emission Rate (lb/hr)	1.2639
Annual Operating Hours	4160

Cyclone #	Exhaust Flow acfm	Operating hr/yr	Percent of Throughput	PM (lb/hr)	PM (tons/yr)	PM10 (lb/hr)	PM10 (tons/yr)
1	14320	4160	26.35%	0.6295	1.3093	0.3330	0.6926
2	15463	4160	28.45%	0.6797	1.4138	0.3596	0.7479
3	16875	4160	31.05%	0.7418	1.5429	0.3924	0.8162
4	5741	420	1.07%	0.0255	0.0530	0.0135	0.0280
5	5741	420	1.07%	0.0255	0.0530	0.0135	0.0280
6	5741	4160	10.56%	0.2524	0.5249	0.1335	0.2777
7	2812	20	0.02%	0.0006	0.0012	0.0003	0.0007
8	2223	20	0.02%	0.0005	0.0010	0.0002	0.0005
Target Box	1540	2080	1.42%	0.0338	0.0704	0.0179	0.0372
		Total	100.00%	2.3892	4.9695	1.2639	2.6289

Total PM Emission Rate = $0.045(PW)^{0.6} = 0.045(750)^{0.6} = 2.3892$ lb/hr (from IDAPA 58.01.01.701)
PM-10 Emission Rate = 59.2% of PM Emission Rate (from Section 10.5, Appendix B of AP-42)

TABLE 4
LUMBER DRYING KILN EMISSION FACTORS AND EMISSION ESTIMATES
QB Corporation

Kiln Emission Factors Based on OSU's Data					
Species	Methonol (lb/MMBrdft)	Formaldehyde (lb/MMBrdft)	Acetaldhyde (lb/MMBrdft)	Propionaldehyde (lb/MMBrdft)	Acrolein (lb/MMBrdft)
Hemlock	72	1.24	113	1	1.6
Douglas Fir	38	1	57	0.55	0.65
White Fir	122	2.8	113	1	1.6
Ponderosa Pine	65	2.9	113	1	1.6
Lodgepole Pine	55	4	12	1	1.6
Average	**70.4**	**2.388**	**81.6**	**0.91**	**1.41**

Kiln Emission Factors From Idaho DEQ Emission Factor Guide for Wood Industry		
PM	PM-10	VOC
(lb/MMBrdft)	(lb/MMBrdft)	(lb/MMBrdft)
0.33	0.19	1.5

Annual Throughput (Brdft)			2,000,000
Average Hourly Throughput (Brdft)			228.31
Criteria Pollutants	**Emission Factors lb/MBrdft**	**Potential Emission Rate (lb/hr)**	**(tons/yr)**
PM	0.33	0.0753	0.330
PM-10	0.19	0.0434	0.190
VOC	1.5	0.3425	1.500
Toxic Pollutants Non-Carcinogenic	**Emission Factors lb/MMBrdft**	**Potential Emission Rate (lb/hr)**	**(tons/yr)**
Acrolein	1.410	3.219E-04	1.410E-03
Methonol	70.400	1.607E-02	7.040E-02
Carcinogenic			
Propionaldehyde	0.910	2.078E-04	9.100E-04
Acetaldhyde	81.600	1.863E-02	8.160E-02
Formaldehyde	2.388	5.452E-04	2.388E-03

APPENDIX C

Supporting Documents

QB Corporation

711 N. Superior Street
P.O. Box 3066
Spokane, WA 99220

Office (509) 483-3010
FAX (509) 483-6455

04/20/2007

Attn: Rocky Walker
QB Corporation
1420 Highway 28
Salmon, ID 83467

Subject: System Information

Rocky, here are the various blowers and their respective air volumes;

1. 75 HP/14,320 ACFM/25" dia.
2. 40 HP/4,281 ACFM/14" dia.
3. 40 HP/7,885 ACFM/19" dia.
4. 30 HP/3,297 ACFM/12" dia.
5. 100 HP/16,875 ACFM/24" dia.
6. 20 HP/5,741 ACFM/14" dia.
7. 15 HP/2,812 ACFM/12" dia.
8. 30 HP/2,223 ACFM/12" dia.
9. 125HP/35,500 ACFM/36" dia.
10. 200 HP/39,900 ACFM/40" dia.
11. 50 HP/1,540 ACFM/6.625" dia.-Relocated high pressure blower – Target Box

Rocky, these are the readings and information I have on the systems. Please call if you need more information. Thank you.

Regards,
Warren Franks

H.J. Burns Company, Inc.

Cyclone # 1

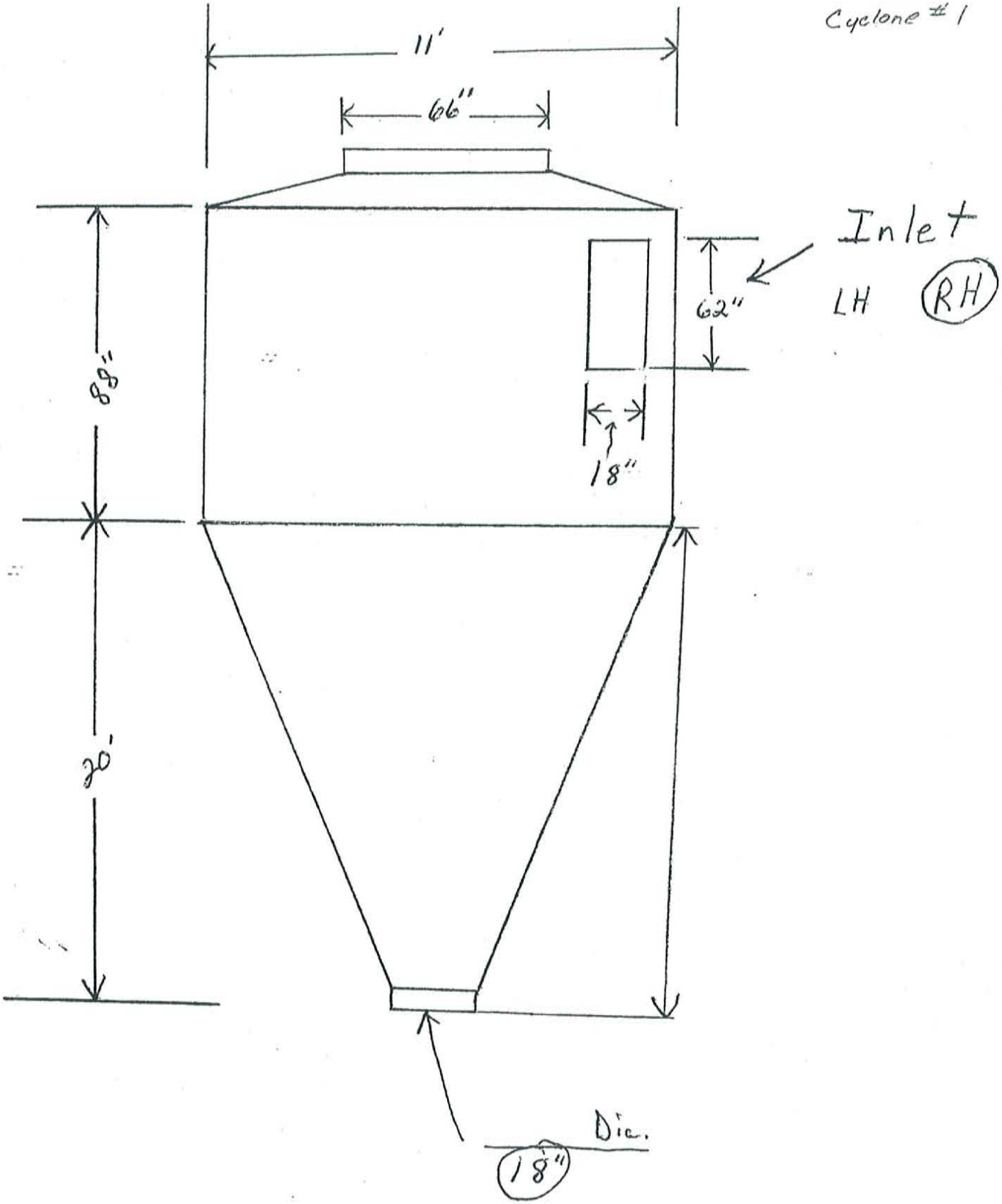

Ground To Top 59' 3"

Blower # 1 75HP

Location - Salmon End wooden Bin

Cyclone #2

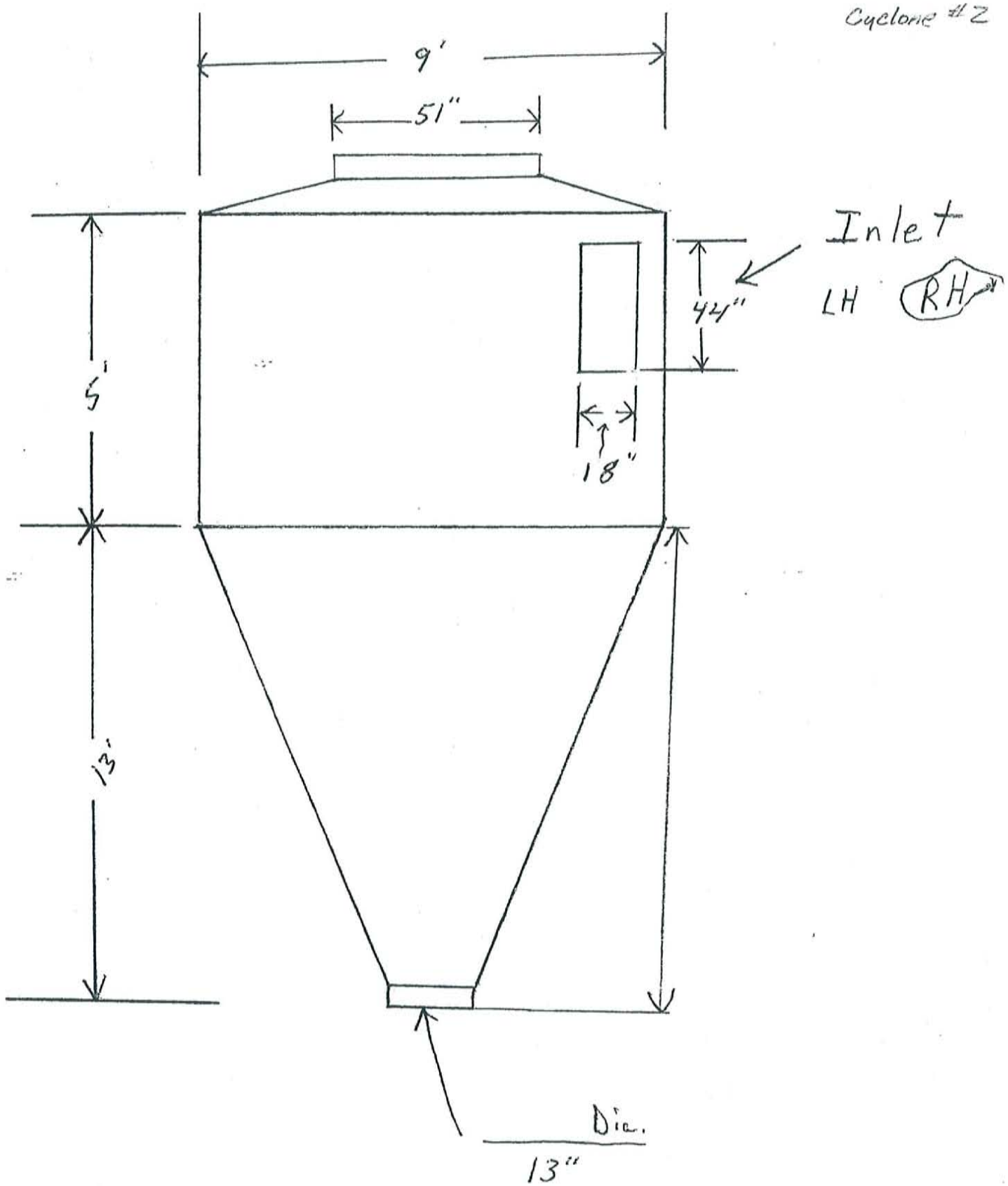

Ground To Top 48' 8'

Blower #2, #3, #4

Location- Center wooden Bin

Cyclone #3

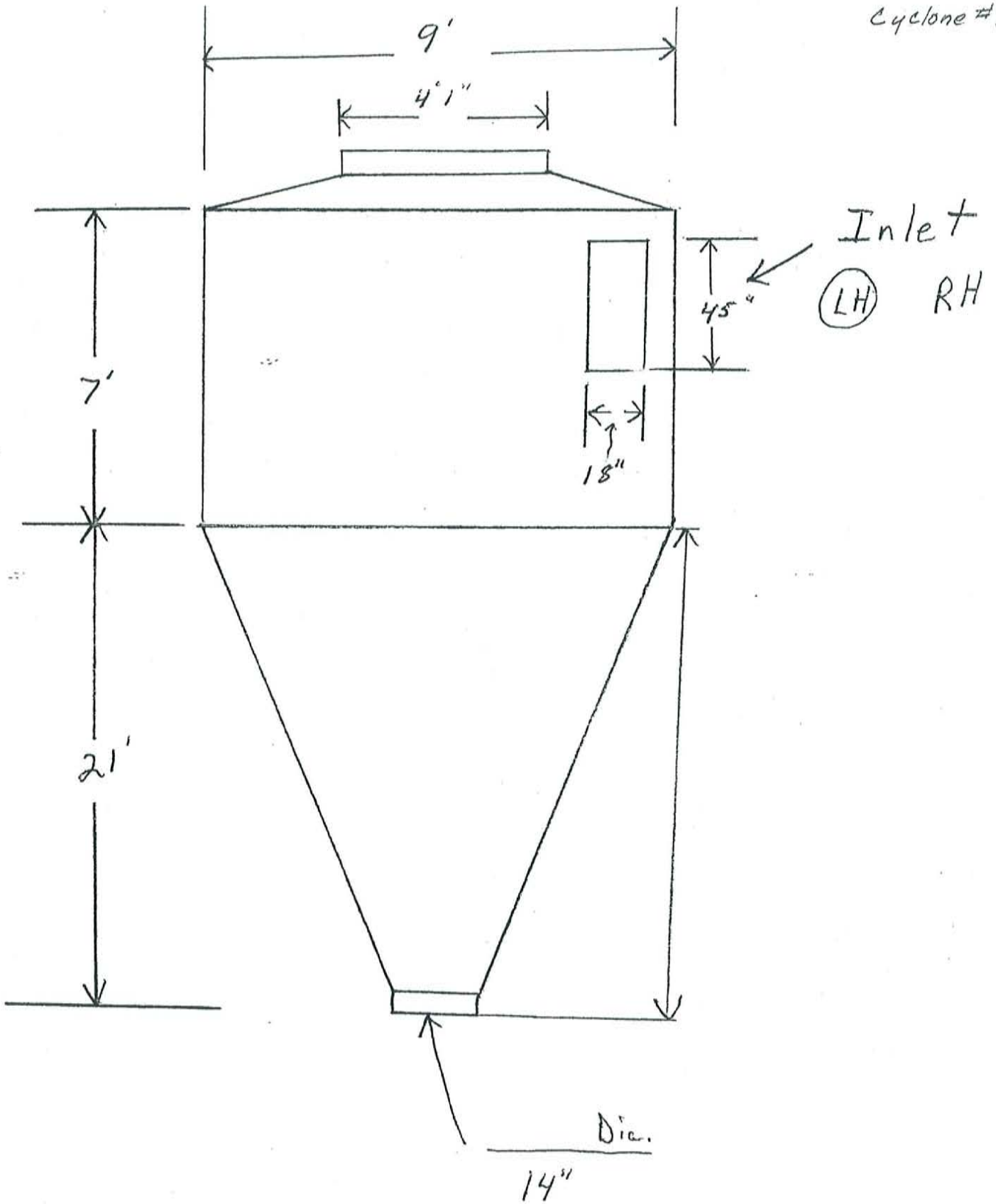

Blower # 5

Ground to Top 56'

Location - Leadore end Wooden Bin

Cyclone # 4

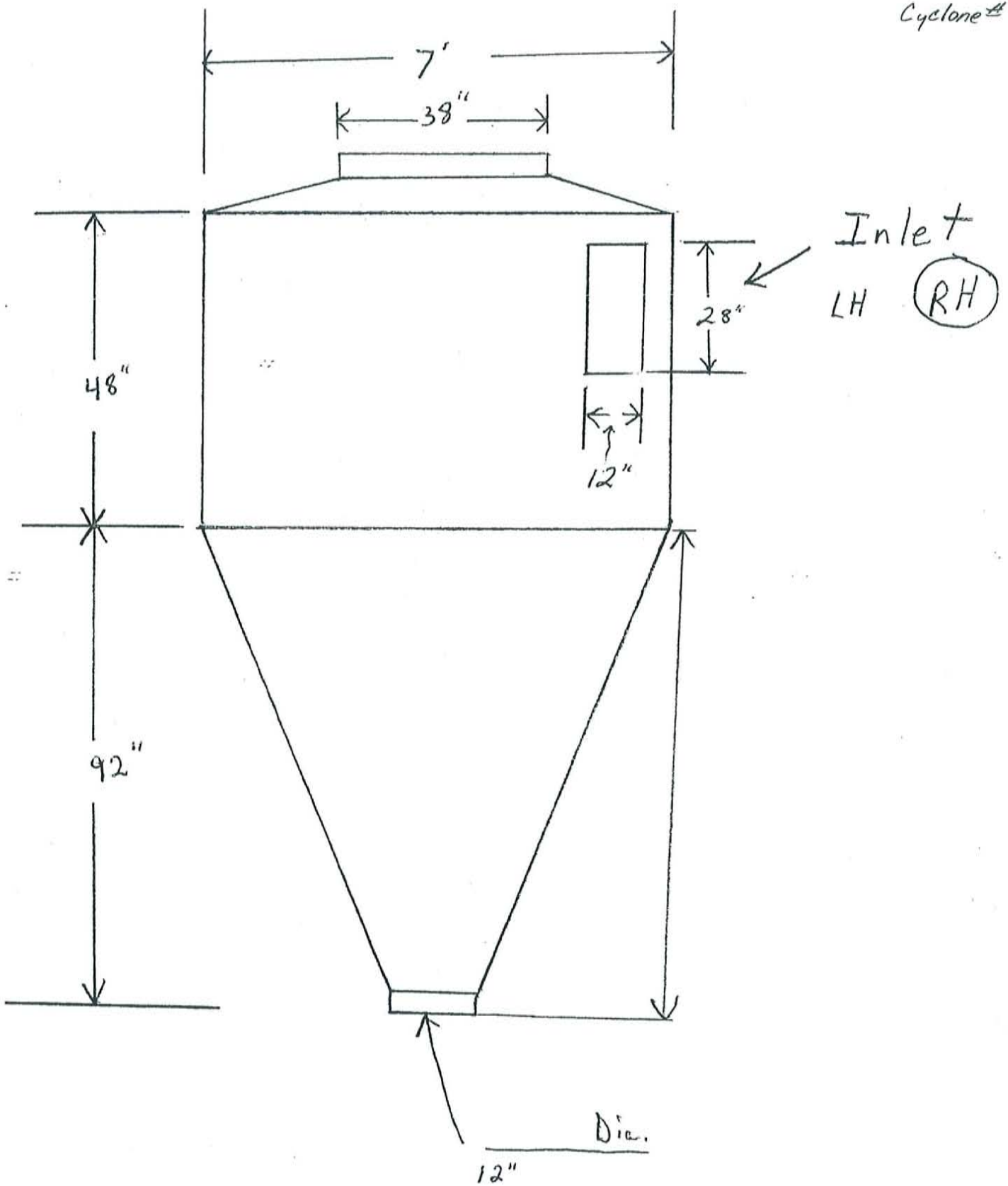

Blower # 6

Ground To Top 60' 5"

Location - Green Truck Bin

Cyclone #5

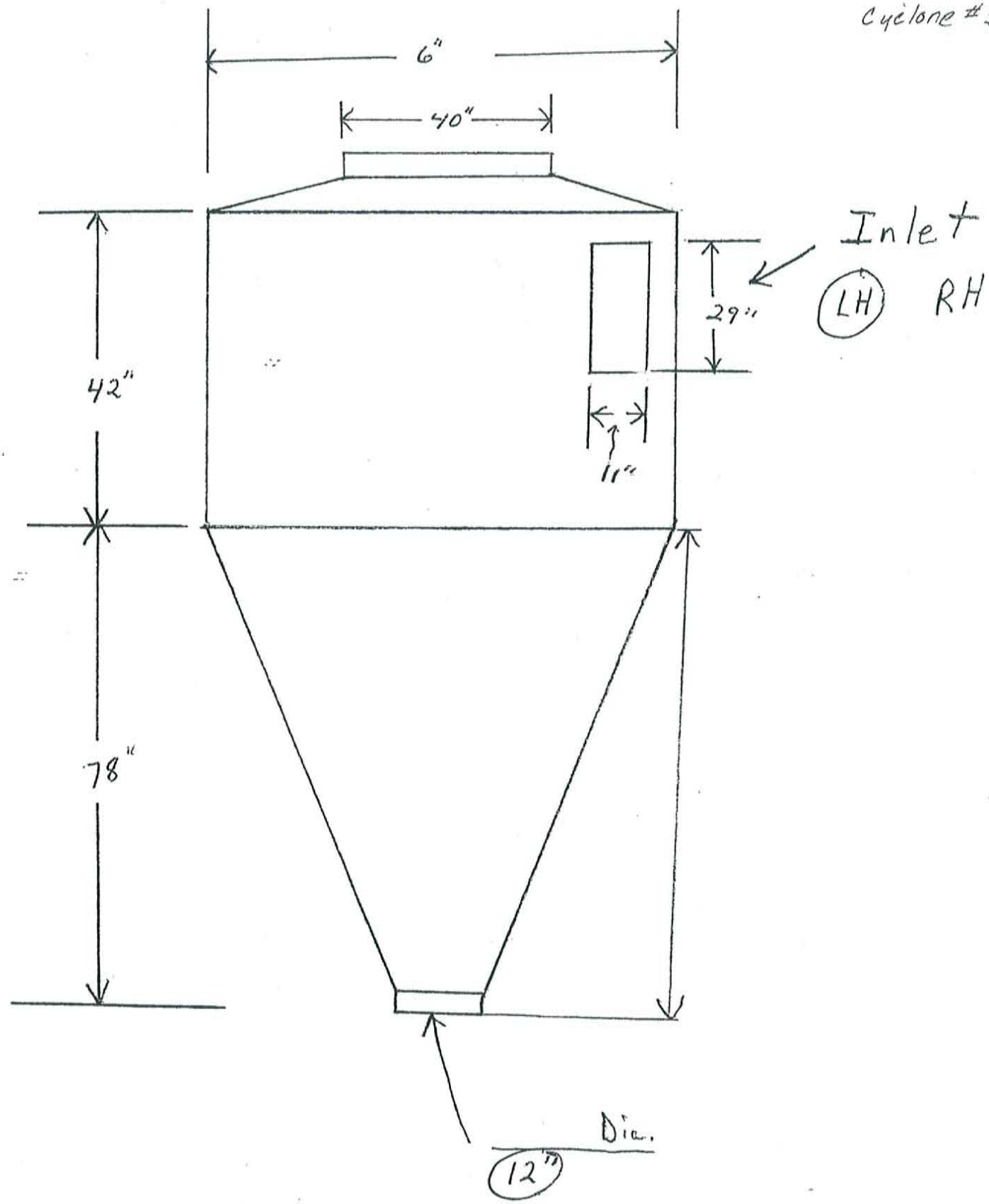

Ground To Top 41' 8"

Blower # 6

Location - Metal Storage Bin (Reserve)

Cyclone #6

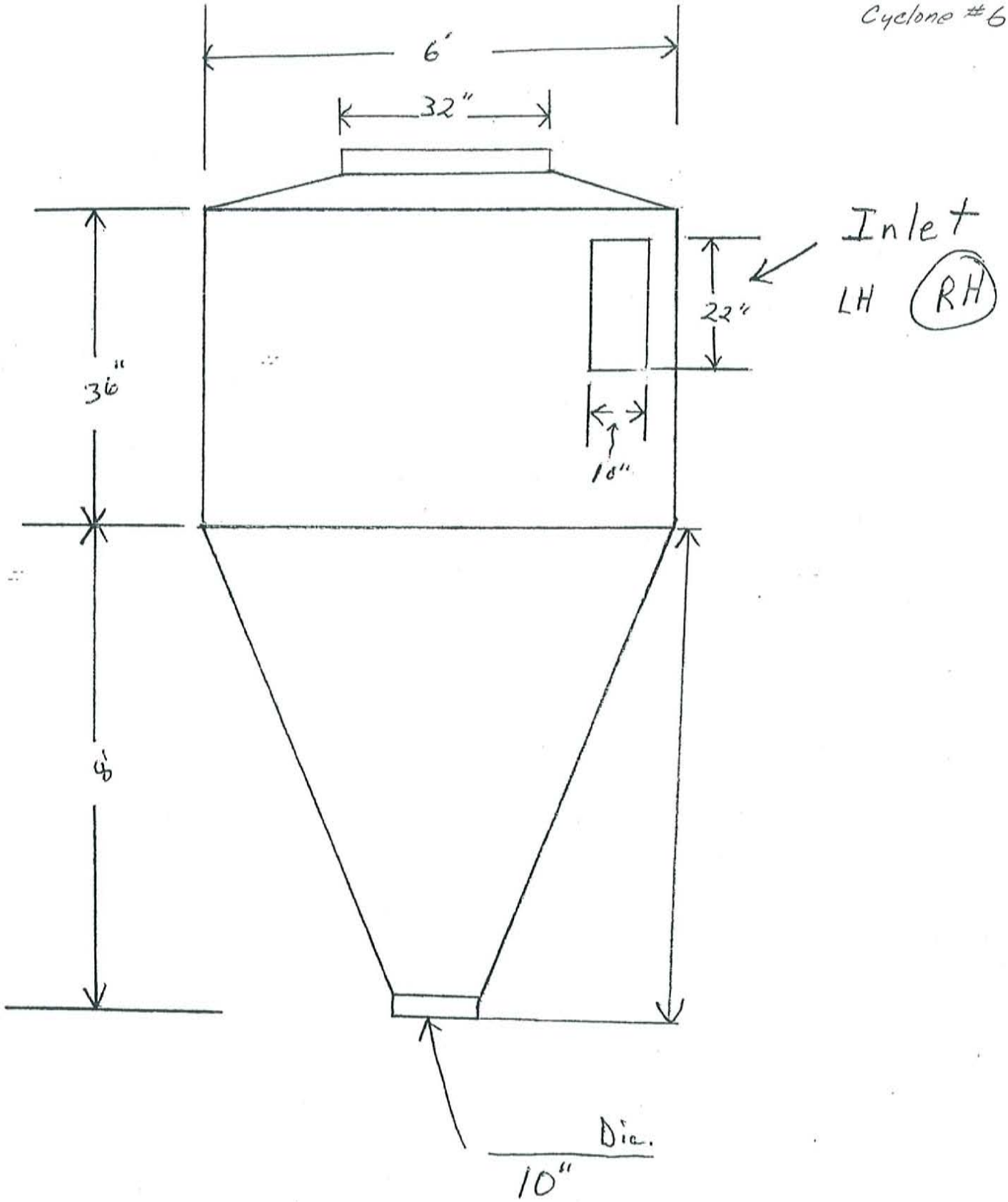

Ground To Top 45'6"

Blower # 6

Location - Largest Cyclone Boiler Storage Bin

Cyclone # 7

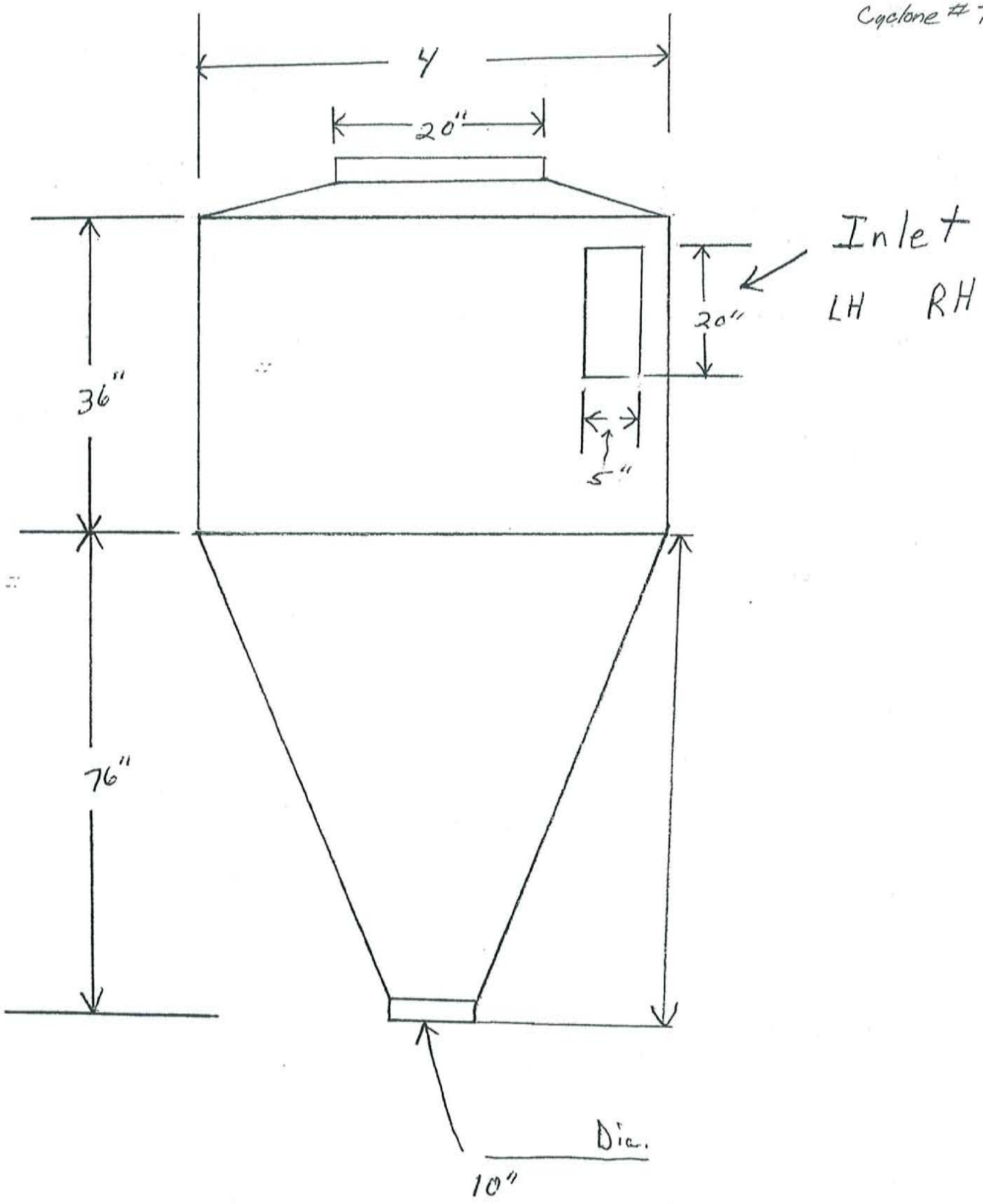

Ground To Top 41' 3"

Blower # 7

Location - Leadora side Boiler Storage Bin

Cyclone #8

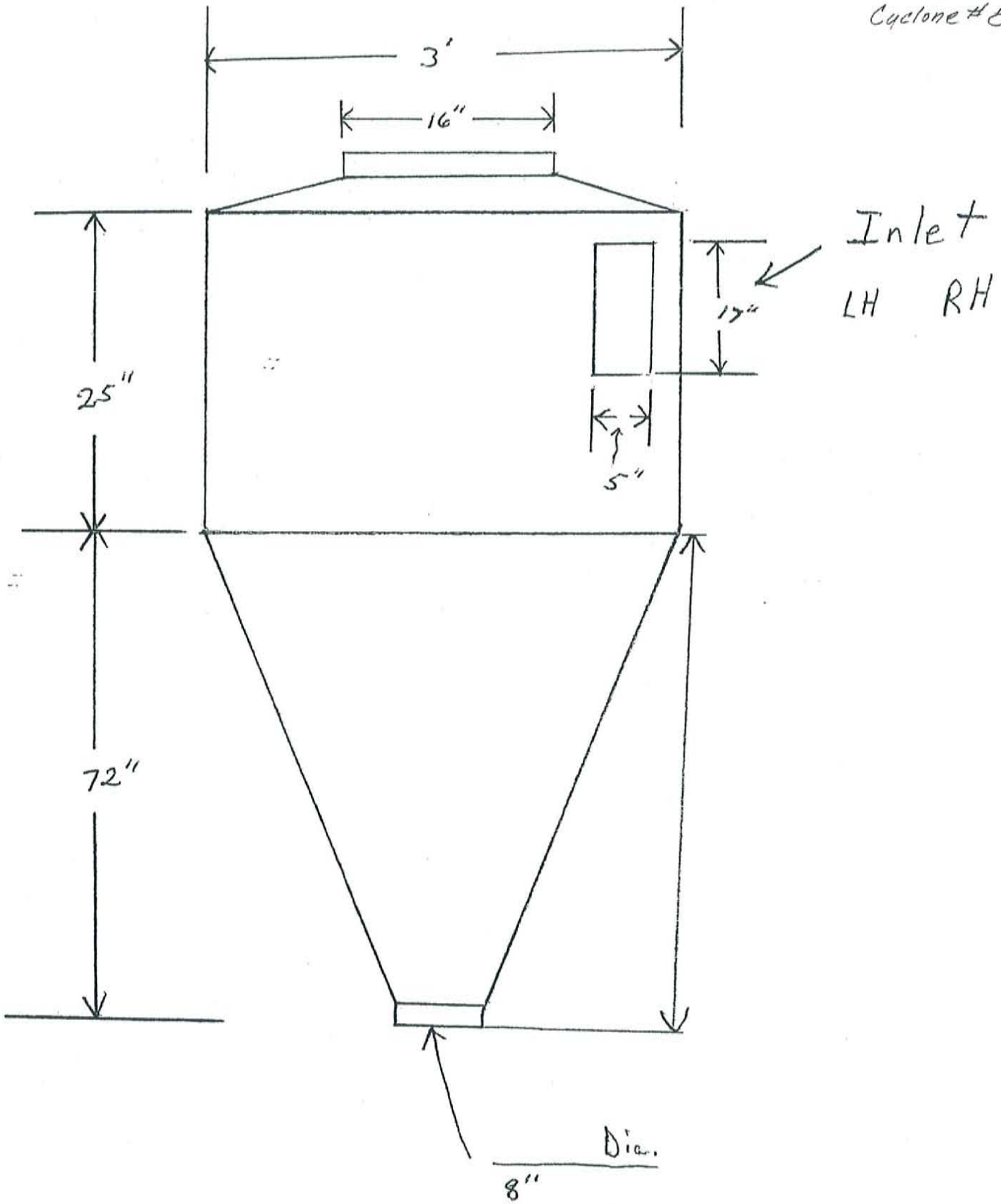

Blower #8

Ground To Top 39' 7"

Location - Boiler Storage Bin

Cyclone #9

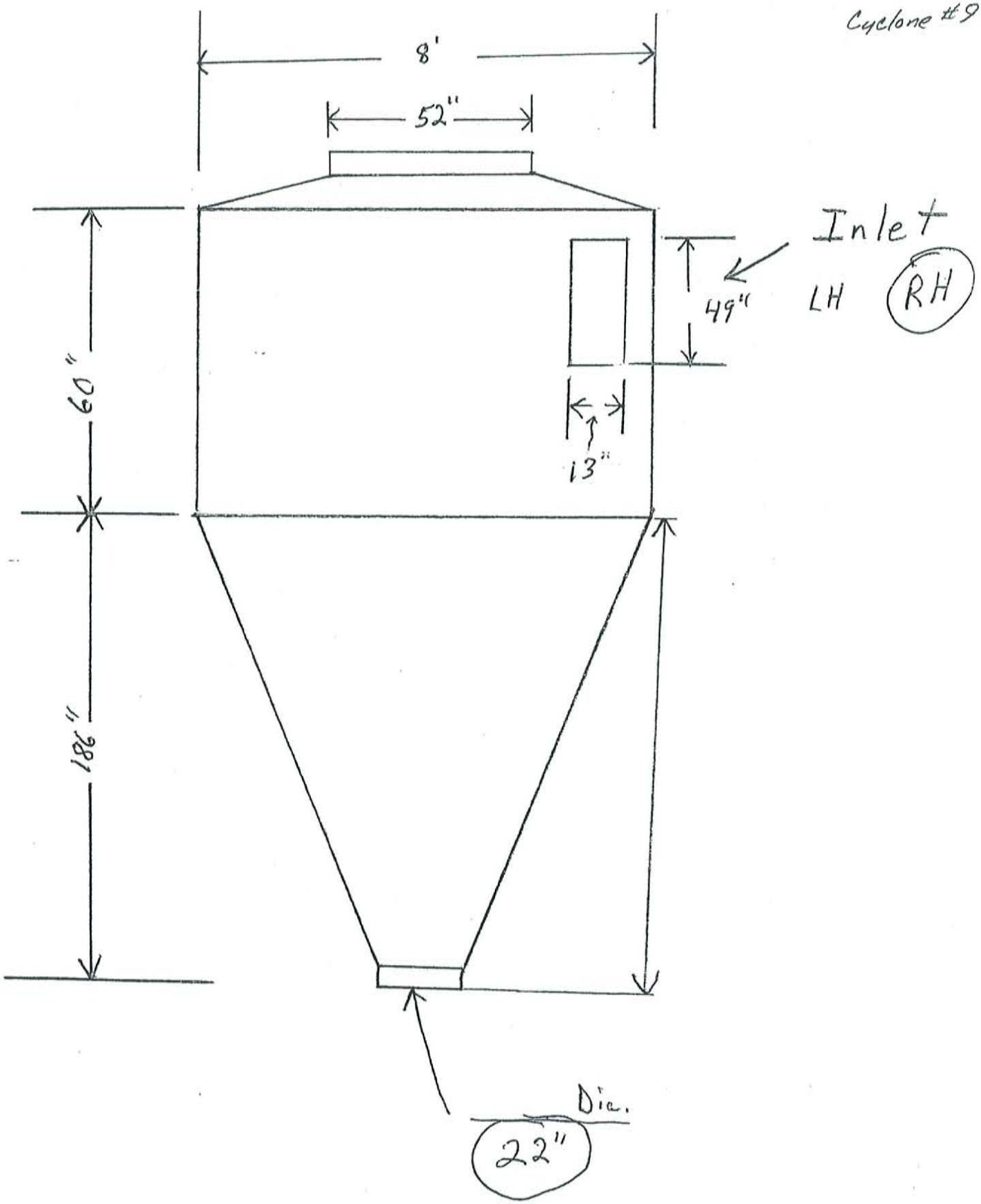

Blower # 9

Ground To Top 14'7"

Blue Cyclone leadore end of Building
with High Pressure Transfer to Wood Bin - Target Box

Cyclone # 10

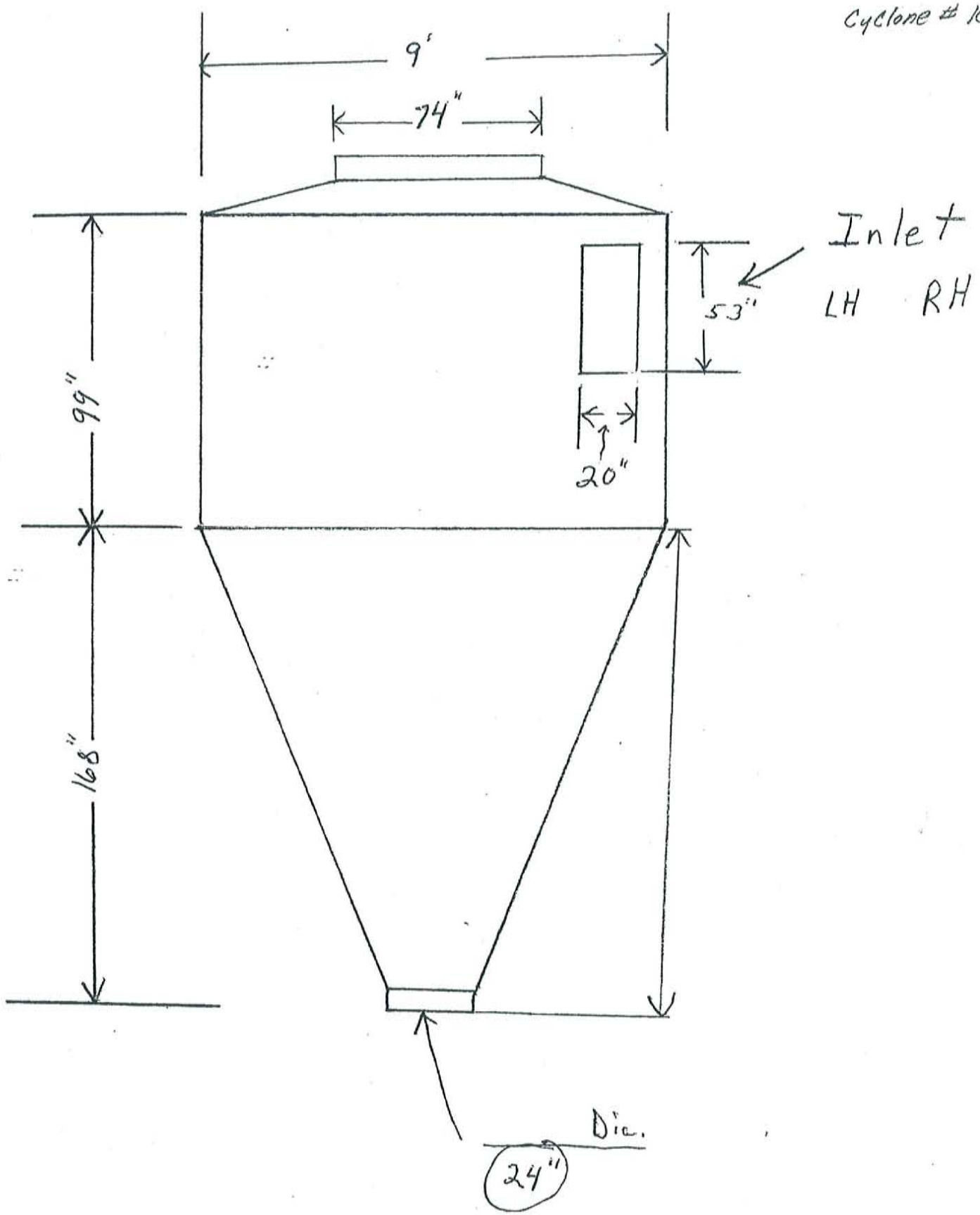

Blower # 10

Ground To Top 12'4'

New Cyclone needs Permit to Construct