APPENDIX B

PROCESS FLOW DIAGRAM

SCALED PLOT PLAN

ADDITIONAL PROCESS INFORMATION
(LETTERS TO DEQ, 5/31/07 AND 6/13/07)

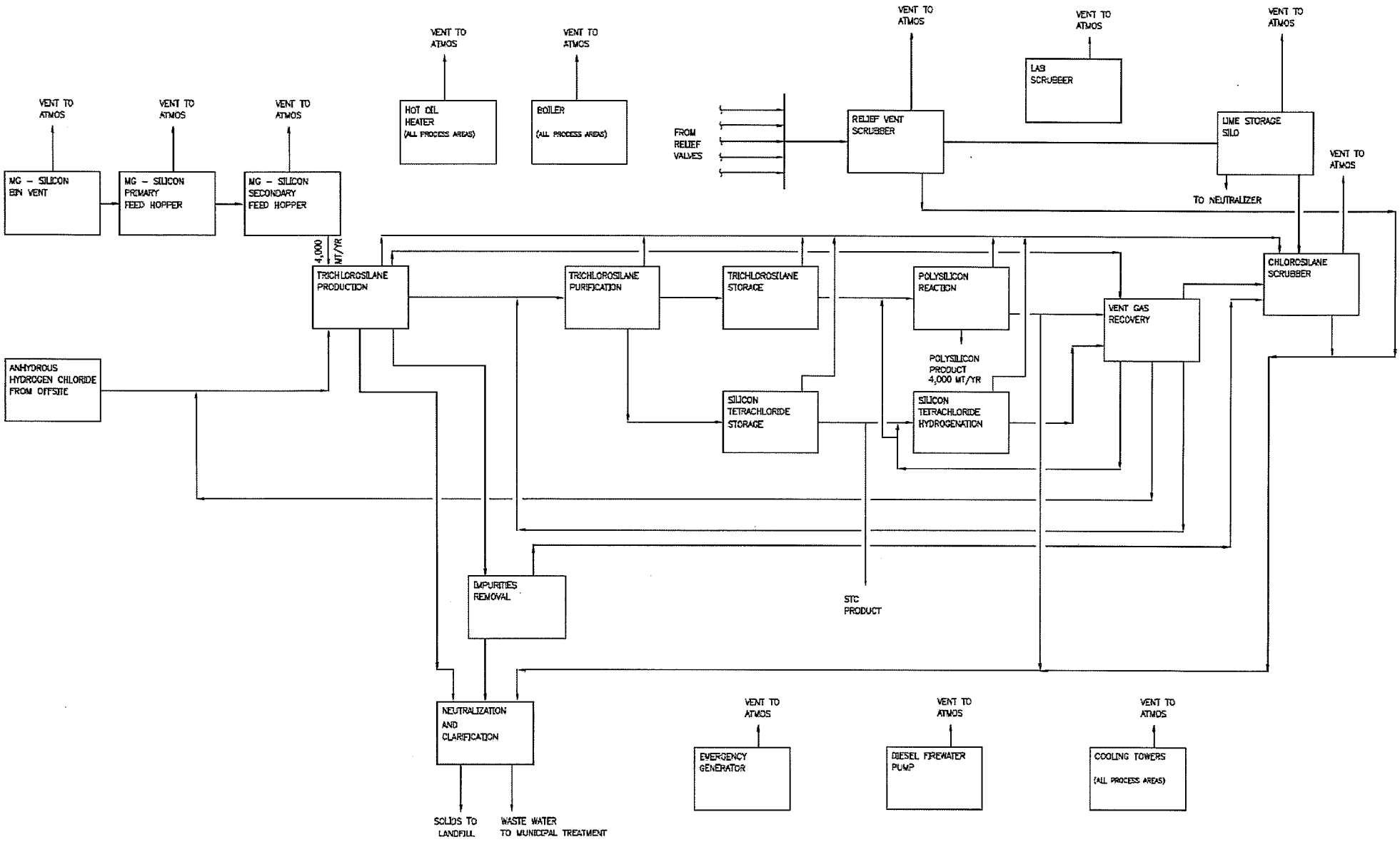
VENT TO ATMOS
MG - SILICON BIN VENT
VENT TO ATMOS
MG - SILICON PRIMARY FEED HOPPER
VENT TO ATMOS
MG - SILICON SECONDARY FEED HOPPER
VENT TO ATMOS
HOT OIL HEATER (ALL PROCESS AREAS)
VENT TO ATMOS
BOILER (ALL PROCESS AREAS)
FROM RELIEF VALVES
VENT TO ATMOS
RELIEF VENT SCRUBBER
VENT TO ATMOS
LAB SCRUBBER
VENT TO ATMOS
LIME STORAGE SILO
TO NEUTRALIZER
VENT TO ATMOS
4,000 MT/YR
TRICHLOROSILANE PRODUCTION
TRICHLOROSILANE PURIFICATION
TRICHLOROSILANE STORAGE
POLYSILICON REACTION
VENT GAS RECOVERY
CHLOROSILANE SCRUBBER
ANHYDROUS HYDROGEN CHLORIDE FROM OFFSITE
POLYSILICON PRODUCT 4,000 MT/YR
SILICON TETRACHLORIDE STORAGE
SILICON TETRACHLORIDE HYDROGENATION
IMPURITIES REMOVAL
STC PRODUCT
NEUTRALIZATION AND CLARIFICATION
SOLIDS TO LANDFILL
WASTE WATER TO MUNICIPAL TREATMENT
VENT TO ATMOS
EMERGENCY GENERATOR
VENT TO ATMOS
DIESEL FIREWATER PUMP
VENT TO ATMOS
COOLING TOWERS (ALL PROCESS AREAS)

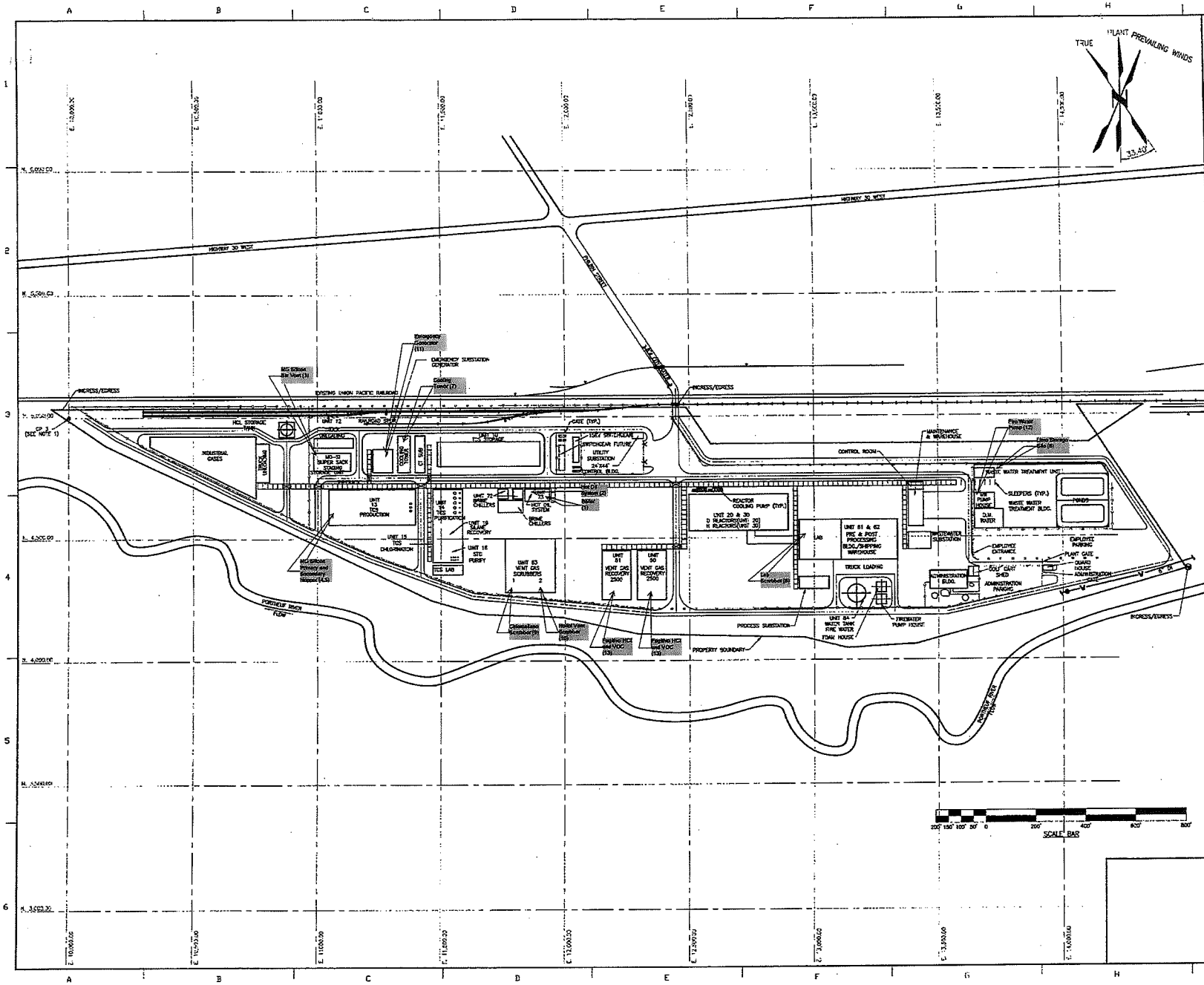

NOTES:

1. ⊕ CP 3

PLANT CO-ORD SYST.	POCATELLO GRID CO-ORD
N. 5000.00	N. 450188.84
E. 10000.00	E. 566028.35

2. FOR ROAD COORDINATES SEE DWG. NO. 128400-00000-C-CVL- LATER

NO	DATE	ISSUE DESCRIPTION	BY	CHKD	SCALE	APPR
C	02/20/08	CLIENT REVIEW/COMMENT	GPT	CNC	SRE	RSE
B	11/09/07	ISSUED FOR CITY AND PROJECT CONTRACTORS REVIEW AND COMMENTS.	GPT	CNC	SRE	RSE
A	10/30/07	FOR CLIENT COMMENTS	GPT	CNC	SRE	RSE

CONFIDENTIAL
This document contains proprietary information belonging to Stone & Webster, Inc. and Hoku Materials, Inc and is to be returned upon request. The contents may not be copied, disclosed to third parties, or used for other than the express purpose for which it has been provided without written consent of Stone & Webster Inc. and Hoku Materials, Inc.

CLIENT: HOKU Materials

HOKU MATERIALS, INC.
3500 MT/YEAR POLYSILICON PLANT
POCATELLO, IDAHO

TITLE: PLOT PLAN

Shaw Stone & Webster, Inc.

DESIGNED BY	DRAWN BY	CHECKED BY
GPT	GPT	CNC

REQ'D ENGR. SRE — ISSUE FOR CONST.

SCALE	CLIENT JOB NUMBER	DATE
AS NOTED		10/30/07

S & W JOB NUMBER	DRAWING NUMBER
128400	128400-00000-P-PP-001-1-C

C:\DOCUME~1\GRAD-1.TEN\LOCALS~1\TEMP\AUTOCAD-WORK-F-PP-001-1.DWG

Hoku Materials, Inc.
1075 Opakapaka Street
Kapolei, Hawaii, 96707-1887

May 31, 2007

Dan Pitman, P.E.
Idaho Department of Environmental Quality
1410 North Hilton
Boise, Idaho 83706

RE: Response to Questions from Review of Hoku Materials, Inc PTC Application

Dear Mr. Pitman:

On May 17, 2007 the Idaho Department of Environmental Quality (DEQ) requested additional information as listed below; Hoku's responses follow DEQ's requests.

Hoku Responses to DEQ's Questions

Below is DEQ's requested information with Hoku's responses:

1) Emission estimates from the Chlorosilane Scrubber, Relief Vent Scrubber and Lab Scrubber are stated to [be] based on source test data from an existing 1,800 Mton/yr polysilicon plant. My basic question is why are these source test results representative of your proposed plant? In answering this question the following should be addressed for each scrubber:

   Hoku Response: Hoku would like to clarify that the emission estimates from the above mentioned scrubbers are based on permit limits from an existing 1,800 Mton/yr polysilicon plant. The permit limits can be found in the Mitsubishi polysilicon permit which was provided to DEQ during the March 28, 2007 pre-application meeting. At this time this is the best information available for estimating the potential to emit for Hoku's facility.

   Hoku believes DEQ's request is reasonable. Hoku's consultant, JBR Environmental Consultants, has submitted a public information request with the Alabama Department of Environmental Management for any existing source test reports from the Mitsubishi facility. If source tests are available, results will be compared to Hoku's proposed operations; adjustments will be made if necessary and communicated to DEQ. However, because we used Mitsubishi's potential to emit that were adjusted for our operations, we do not anticipate changing requested permit limits based on source test results of actual emissions.

   a) What type of scrubber was used on the plant that was tested?

      Hoku Response: See discussion above. Source test information was requested for all of Mitsubishi's operations and Hoku will communicate to DEQ any source test information

obtained, including the type of scrubber tested, emission units vented to each scrubber, and production rates.

b) What emissions units were vented to each scrubber (i.e. polysilicon reactor, trichlorosilane production, hydrogenation, vent gas recovery system, etc.) during the test?

Hoku Response: See response to 1(a) above.

c) For instance what units emit to the relief value scrubber?

Hoku Response: All units containing safety relief devices.

d) At what production rate were the emission units operating at during the performance test?

Hoku Response: See response to 1(a) above.

e) For the laboratory describe the types of tests/experiments that will be conducted?

Hoku Response: Analytical testing of chlorosilanes and polysilicon.

f) Why is HF emitted?

Hoku Response: Small samples are etched with mixed acid HNO_3 and HF. The vent hood from this procedure goes to the lab scrubber.

g) Are there any other air pollutants emitted?

Hoku Response: No additional air pollutants are emitted other than those listed.

h) Provide the source test report(s)

Hoku Response: See response to 1(a) above.

2) After TCS is produced, metal chloride impurities are stated to be removed. Are any of these metal chlorides emitted? If so give what compounds and at what rates. If not, describe why they are not emitted. Describe this process; is it an entirely wet process? Also, it would be beneficial to describe the concentrations and quantities of metal chlorides you are expecting to generate and treat.

Hoku Response: No metal chloride impurities are emitted to the atmosphere. The metal chlorides are precipitated with lime or caustic in an entirely wet process. The resulting solids (metal oxides, principally amorphous silicon dioxide, with small amounts of iron and aluminum oxides) are dried and sent to a municipal landfill. The concentrations and quantities of the metal chlorides have not been defined and are expected to be determined in the detailed design phase of the project.

3) In TCS purification, it is stated that phosphorus and boron are removed. Are these pollutants emitted to the atmosphere? If so at what rates and what compounds are emitted? If they are not emitted, why not? Give the concentrations of these elements that you are expecting to have as impurities.

   Hoku Response: Phosphorus and boron are not emitted to the atmosphere. These impurities are precipitated in their oxide form along with the metal chlorides. The concentrations of the metal impurities expected can be estimated based on the concentration of impurities found in the metallurgical grade silicon.

4) Please provide a description of the vent gas recovery systems operation.

   Hoku Response: The Vent Gas Recovery Unit takes the combined vent gas from the CVD and Hydrogenation Reactors. It separates liquid chlorosilanes, hydrogen chloride gas and hydrogen gas. The hydrogen is returned to the reactors. The hydrogen chloride gas is returned to the TCS Production unit. The mixed chlorosilanes are returned to the TCS Purification unit.

5) The chlorosilane scrubber appears to be primarily an acid gas scrubber. Please clarify if it is or not. If it is, propose pH or chemical concentration monitoring as part of your monitoring regime that will assure that the scrubber will be operated as designed.

   Hoku Response: To ensure proper operation, the Chlorosilane Scrubber will be maintained at a pH between 12 and 14.

6) High level chloride wastes are said to be evaporated in an on-site pond. Are there any air pollutants emitted from the pond. If so please provide and emission inventory. If not, describe why there are no emissions.

   Hoku Response: There are no air pollutants emitted from the on-site holding pond. Only water is evaporated, leaving behind salts that can be sold as byproducts after reaching the desired concentration.

7) Provide a description of metallurgical silicon (i.e. %Si and what are the typical impurities).

   Hoku Response: The metallurgical grade silicon used at the Pocatello facility is approximately 98% silicon. Listed below are the typical impurities that exist in the metallurgical grade silicon at very low concentrations.

MGS Impurities	Estimated Range
Iron	1- 1.5%
Aluminum	0.5-1.0%
Calcium	<0.5%
Titanium	<0.5%
Manganese	<0.5%
Nickel	<0.5%
Copper	<0.5%
Boron	<0.5%
Phosphorus	<0.5%

8) Will any mercury be emitted?

   Hoku Response: No mercury will be emitted to the atmosphere from any stage of the polysilicon process.

9) How is the HCl stored, transferred etc and what are the emissions from handling/storing it. Are the vapors displaced treated or emitted directly to the atmosphere? What are the emissions rates? For instance is there a tank that is filled on-site? If so, what are the emissions from the vapors that are displaced from filling the tank?

   Hoku Response: HCl is stored at low temperatures and remains in liquid form. All vents that contain chlorides are treated in the Chlorosilane Scrubber.

We believe this letter address the questions and information requested by DEQ. If you have questions or need additional information, please contact me at 808.682.7800 ext 101 or Daniel Heiser of JBR Environmental Consultants, Inc. at 208.853.0883.

I certify that based on the information and belief formed after reasonable inquiry, the statements and information in this document are true, accurate and complete.

Sincerely,

Karl Taft
Chief Technology Officer
Hoku Materials, Inc.

One Hoku Way, Pocatello, Idaho 83204 USA
Tel: 808.682.7800 | Fax: 808.682.7807

[Responses to DEQ Questions]

Karl Taft
CTO

ktaft@hokusci.com

June 13, 2007

June 13, 2007

Dan Pitman, P.E.
Senior Engineer
Idaho DEQ
1410 N. Hilton
Boise, ID 83706
(208) 373-0498

Dear Mr. Pitman:

Please review this document as it contains responses to your questions posed via email on June 4, 2007. There are also additional pieces of information which we feel may help in the understanding of Hoku Materials 2,000 metric ton polysilicon plant which are also included for reference.

We look forward to continuing our strong working relationship with you and the Idaho DEQ team. If you have any questions please do not hesitate to contact me at 808-389-8238 or via email at ktaft@hokusci.com.

Thank you.

Best regards,

Karl Taft
Chief Technology Officer

1. Question#1 and Answer Highlights from email → Mitsubishi Plant Comparison: 4
Mitsubishi – Hoku Plant Comparison: Overview 5
Front End Process → (chlorination and purification) 5
Chemical Vapor Deposition Process → (Siemens Reactor Process to make polysilicon) 6
Vent Gas Recovery Process 6
Product Finishing 8
2. Question#2 and Answer Highlights from email → Safety Relief Valves: 8
3. Question#3 and Answer Highlights from email → Metal Chloride Drying Process: 9
4. Question#4 and Answer Highlights from email → Vent Gas Recovery Details: 9
Additional Vent Gas Recovery (VGR) Details 10
5. Question#1 and Answer Highlights from email → Mitsubishi Plant Comparison: 12

1. Question#1 and Answer Highlights from email → Mitsubishi Plant Comparison:

In this section are brief answers/guidance to the email inquiry sent on June 4, 2007. However, the following sections have more detail as to the emission units and detail to why the Mitsubishi and Hoku plants are similar. If there are any questions please contact Karl Taft.

Part 1) Hoku states that emissions limits on the Mitsubishi plant are representative of emissions from the proposed operations in Pocatello. Hoku also states that Mitsubishi's potential to emit was adjusted for Hoku's operation to obtain emission estimates. What emission units are permitted at the Mitsubishi plant?

Response to Part 1) The main areas of emission are the chlorination plant, distillation plant, reduction plant, finishing plant and utilities. Please see below for more information. Each of these areas operates in a relatively similar fashion between the Hoku and Mitsubishi process and is described below further (pages 5-8).

Part 2) For clarification, an emission unit is defined as an identifiable piece of process equipment that emits air pollution (a scrubber is not an emission unit, the process equipment that emits air pollution to the scrubber is an emission unit). Why are the Mitsubishi and Hoku plants similar?

Response to Part 2) The Mitsubishi and Hoku plants have similar components and are approximately the same size in production. Please refer to the following pages as we think it answers your question properly (pages 5-8).

Part 3) Does the Mitsubishi plant have the same emissions units?

Response to Part 3) Yes. Both plants have a chlorination reactor, TCS purification, CVD reactors, a vent gas recovery unit, and post processing area. Additionally there are the support areas such as the cleaning area and utilities that are consistent in both plants as the processes are very similar. These are described in further detail in the following sections (pages 5-8). This is just an overview answer.

Part 4) How were emissions adjusted?

Response to Part 4) The Mitsubishi plant is rated for 1,800 metric ton per year capacity. Hoku is rated for 2,000 MT per year. The emission quantities were calculated based on the increased capacity of the Hoku project. Please see the following Page 5 for more detail.

Part 5) In Hoku's application it is stated emissions limits on the Mitsubishi plant are representative and were used to estimate emissions from Hoku's lab scrubber, chlorosilane scrubber and relief vent scrubber. Please describe in as specific terms as possible why these emission limits represent emissions from Hoku's operations.

Response to Part 5) It is very difficult to list out all the emission units in comparison between different plants on a "pump by pump" basis. Hopefully the following pages answer the question and provide the reader with more comfort. However, speaking in general process terms both plants have CVD reactors, TCS production and purification areas and post processing areas. As such it is a good basis of estimation for the Hoku facility. If more information is needed please contact Karl Taft.

Part 6) Providing the results of emissions test results from the Mitsubishi plant would be very helpful, however the above questions should be answered regardless of whether source test results are available or not.

Response to Part 6) Hoku does not have this report yet. JBR requested this information two weeks ago and has not received a copy thus far.

Please refer to the following pages as it details out more of the methodology Hoku employed in its permit (responses to Question #1).

Mitsubishi – Hoku Plant Comparison: Overview

Both the Mitsubishi plant in Theodore, Alabama and the proposed Hoku plant use very similar processes. Both plants manufacture TCS via a fluidized bed process, both use a chemical vapor deposition reactor (Siemens Reactor type), both recover hydrogen components and both have a finishing department before shipment.

Based on the similar nature of Hoku's proposed polysilicon plant and the Mitsubishi plant, the Mitsubishi plant was used as the basis of the permit as submitted on May 15, 2007. A ratio comparison was used to increase the emission rates of the proposed Hoku plant compared to the Mitsubishi facility. The Mitsubishi facility only produces 1,800MT compared to Hoku's 2,000 MT proposed output. The emission quantities were calculated based on the increased capacity.

More details comparing the similarities and differences of the plants are provided below (Pages 5-8).

Front End Process → (chlorination and purification)

Mitsubishi manufactures high-purity polysilicon starting with metallic silicon (MG-Si), of greater than 98% purity. The metallic silicon is reacted with hydrogen chloride gas (HCl) in a fluidized bed reactor, producing trichlorosilane gas (TCS) and a side stream product, silicon tetrachloride (STC). This is the same type of process Hoku will use.

The trichlorosilane gas is cooled in heat exchangers and liquefied. Impurities such as iron, boron, phosphorous and aluminum compounds are then removed in a series of distillation columns. These are not air emitted byproducts because they are sent to the precipitation process for removal. The refined trichlorosilane is stored in tanks and tested for chemical and physical performance before further processing. This is the same as the Hoku process.

Chemical Vapor Deposition Process → (Siemens Reactor Process to make polysilicon)

Once analyzed, the trichlorosilane (TCS) liquid is vaporized, mixed with hydrogen gas and sent to a reduction or Chemical Vapor Deposition (CVD) furnace. During the chemical vapor deposition process, silicon from the gas stream is deposited on the surface of electrically heated polysilicon seed rods. The reduction furnace is precisely controlled to grow the polysilicon rod to a predetermined diameter. This process varies but generally ranges from 5-8 days. The Mitsubishi and Hoku CVD processes are essentially the same. A picture of typical polysilicon reactor and reactor area is shown below.

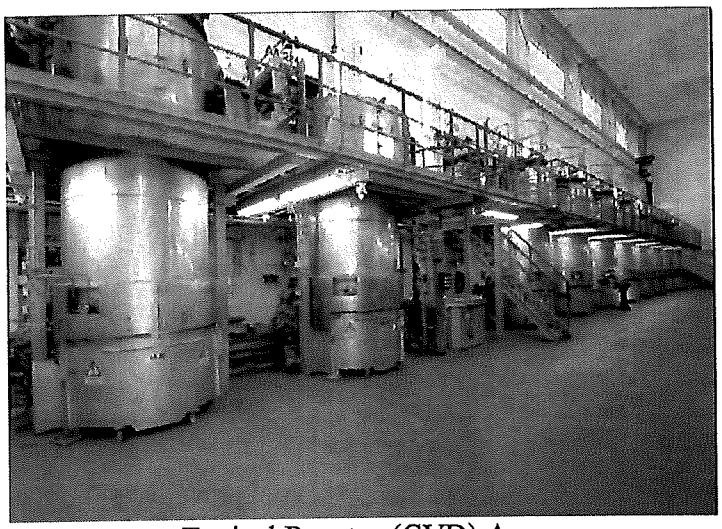

Typical Reactor (CVD) Area

The emission units for this area include each reactor that Hoku has in its plant. Mitsubishi would have something similar. Each reactor purge goes to the chlorosilane vent scrubber and is a main source for the emissions from this area. The scrubber types are not selected but may be venturi, spray chamber or a combination. This is very similar to the Mitsubishi process and other polysilicon manufactures that employ a TCS based process. The factored estimate that was used to calculate the Hoku emissions is based on the plant capacity of the polysilicon production capabilities (i.e. comparing Mitsubishi's 1,800 MT plant to Hoku's 2,000MT plant). Most reactors today have the similar production capacities and chamber volumes and thus must be opened at approximately the same frequency releasing similar components and volumes. It is more a function of production capacity. This is the only emission unit in this area.

Vent Gas Recovery Process

Exhaust gases exiting the CVD reactors contain primarily silicon tetrachloride (STC), TCS, hydrogen, and HCl. Recycling these components is important as they are starting materials at several points in the process and thus have value. The Vent Recovery Unit (VGR) accepts the mixed vents from CVD Reactors and hydrogenation reactors and separates into a mixed chlorosilane liquid (STC and TCS), recovered HCl gas, and

recovered hydrogen gas. The VGR system recovers approximately 98% of all gases and distributes them to various areas in the plant. Very little emissions from the vent gas recovery system go to the scrubbers. The only periodic stream is from the carbon bed regeneration which is a nitrogen purged process.

The hydrogen compressors are reciprocating compressors designed to boost the pressure to the required hydrogen return pressure. The HCl is sent back to the fluid bed reactor. Clean hydrogen is recycled to the CVD and hydrogenation reactors. Mixed chlorosilanes are sent back to the distillation train.

The vent gas recovery unit that will be provided to Hoku is being designed by Chemical Design Inc. (CDI). They have over 40 years in industry and have built systems for Hemlock, Wacker, MEMC and Mitsubishi. All these companies have operating polysilicon plants similar to the Hoku plant. This is another reason why the Mitsubishi plant was used for comparison for this plant emission estimates. A brief write up and picture of the CDI recovery plant from the CDI Website (www.chemicaldesign.com) is below.

The Chemical Design, Inc. Poly Plant Vent Gas recovery process recovers approximately 98% of all components in the decomposer vent gas and delivers the following streams:

1.) Pure Hydrogen to be recycled to the Trichlorosilane vaporizer..
2.) Pure Hydrogen Chloride to be used in fluid bed reactors to produce $SiHCl_3$.
3.) Mixed Chlorosilanes to be separated into $SiHCl_3$ for reuse and $SiCl_4$ for conversion to $SiHCl_3$.

This process is also attractive environmentally because there are no waste streams to dispose of and the opportunity to introduce contamination is minimized because no outside streams such as water and caustic solution are brought in contact with the gas stream.

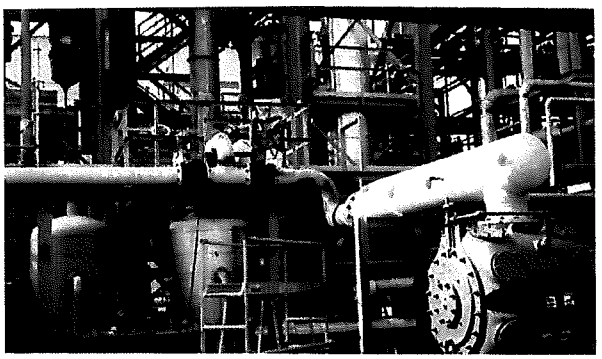

Typical CDI Facility

Typical emission units for this area are distillation columns, pressure vessels, heat exchangers and compressors. No continuous emissions go to the scrubber system when this area is properly operating.

Product Finishing

After the reactor cools down and is shut-off, technicians remove the polysilicon rods and perform the visual inspection. Fully grown rods are removed from the reactor. The rods are placed onto carts for further processing into rod sections and chunk products.

The polysilicon rods are broken into chunks and bagged prior to shipment. Inspection is done prior to weighing and packaging.

A general flow process is shown below. Hoku and Mitsubishi have relatively similar processes to the one depicted below.

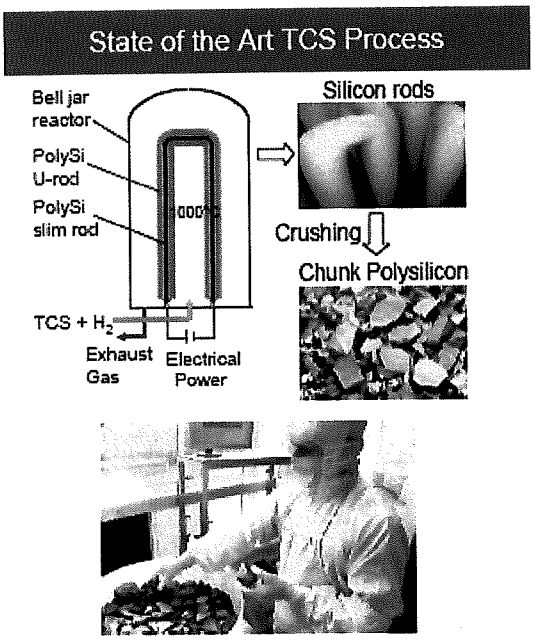

Process Finishing From Wacker Website

2. Question#2 and Answer Highlights from email → Safety Relief Valves:

Part 1) What emission units have safety relief valves? Please describe the conditions under which the relief valves will open and what are the expected pollutants and emission rates from the open valves.

Response to Part 1) There are more than 100 safety valves which tie into the relief vent header which goes to the relief vent scrubber. Typical safety valve settings are between 100-300 psig. All pressure vessels used in the Hoku plant will be fitted with safety relief valves as per ASME code. The relief valves will only open under abnormal conditions and if the control system fails to reduce the operating pressure or shutdown the affected system.

Regardless of probability, the main focus is to maximize plant safety and prevent the uncontrolled release of materials. In the event of release the scrubber system will remove and neutralize the release of material.

3. Question#3 and Answer Highlights from email → Metal Chloride Drying Process:

Part 1) Metal Chlorides are stated to precipitated with lime or caustic in an entirely wet process. The resulting metal oxides are dried and sent to municipal landfill. Amorphous silicon dioxide is a potential air pollutant; please describe the drying process and why amorphous silicon dioxide is not emitted to the atmosphere during the drying process or while handling the dried material.

Response to Part 1) Use of the term "drying" may be somewhat misleading, when the more correct term is water reduction. Liquid is removed from the metal oxide through a belt filter or filter press process. Both technologies remove excess water but do not create a completely dry cake. Depending on the method and the material being filtered, the cake has 20-75% remaining liquid and is therefore not a source of air pollution. The design removes water so no "free" water remains in the cake or drains from the cake in the transport bins, but is not so dry that particulate is released.

4. Question#4 and Answer Highlights from email → Vent Gas Recovery Details:

Part 1) The vent gas recovery unit is stated to remove liquid chlorosilanes, hydrogen chloride gas and hydrogen gas from the vent gas stream prior to the chlorosilane scrubber. Please describe in detail the physical and/or chemical processes that are employed to accomplish the removal of chlorosilanes and hydrogen chloride gas.

Response to Part 1) There may be a misunderstanding of the operation of the vent gas system. In general, the vent gas recovery unit recycles all gases exiting from the CVD reactors (ie Siemens reactors) and hydrogenation reactors.

Please see the following Pages 10-11 for further details. The reader can also refer to Section 1 for additional insight.

Part 2) It appears that the proper operation of the vent gas recovery unit is critical in assuring that chlorosilanes and hydrogen chloride gas is not emitted in quantities greater than what is stated in the application. How is the vent gas recovery unit operated and maintained? Please see the explanation below.

Response to Part 2) The Vent Gas Recovery recycles all chemicals from the reactors back into other parts of the process. It is not essential to operate the vent gas recovery unit properly to ensure that the chlorosilane and hydrogen chloride gas is not emitted. It is a recycle unit for the plant and not a pretreatment unit for the scrubbers. The unit is linked with the reactors to control the quality of materials returned/recycled. Shut down of the VGR does not mean that chlorosilanes or HCl are released. Shutdown of the VGR unit

also requires that vent flow from the reactor must be discontinued. That is one of the benefits of this process and the Chemical Design Inc. VGR unit. It is the lynchpin of the process.

Part 3) What are the operating parameters that must be maintained to assure the vent gas recovery unit operates as designed (temperature, pressure drop, flowrates, etc.)

Response to Part 3) All the details of operation of this unit are difficult to provide based on the proprietary nature of the unit. However, CDI has designed several of these units and the control system to operate it. As such Hoku intends to monitor temperature, pressure, flow rates and other parameters to ensure the proper operation of the unit. More details are provided below.

Part 4) If the vent gas recovery system is not critical in limiting emissions of chlorosilane and hydrogen chloride please describe how the chlorosilane scrubber is designed to abate emissions of these pollutants that would occur without the vent gas recovery system operating as designed.

Response to Part 4) There is no continuous flow to the vent gas scrubber from the vent gas recovery system. As such if the VGR system is down there is no additional load to the scrubber system. Hoku believes there is a misunderstanding of its process. Hopefully, the details in this response document help provide clarity. If not, please contact Karl Taft for further information.

Additional Vent Gas Recovery (VGR) Details

The Vent Gas Recovery recycles all chemicals from the reactors back into other parts of the process as shown on the block flow diagram below (this is the same diagram submitted with the application on May 15, 2006).

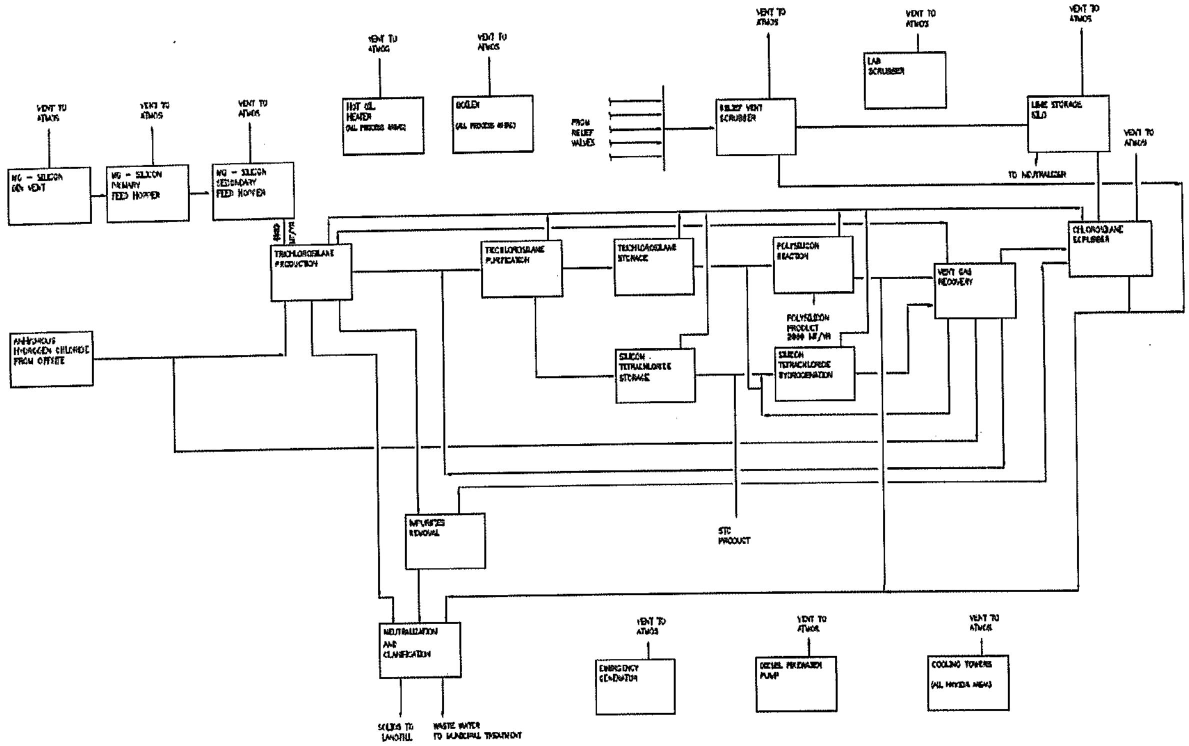

There are no continuous vents from the VGR to the scrubbers. VGR uses typical processing equipment including distillation columns, reboilers, condenser, heat exchangers, pumps, compressors and absorbers to separate the various chemicals for re-use in the process. A more detailed description of the VGR unit is below.

<u>Overview</u>
The Reactor Vent Gas Recovery Unit takes the combined vent gas from the CVD reactors that deposit polysilicon onto high temperature rods, and Hydrogenation reactors that convert STC back to TCS. A common header near the reactor building collects the vent gas from the reactors and sends it to the CDI Vent Gas Recovery Unit (VGR), which separates the stream into liquid chlorosilanes, HCl gas, and hydrogen gas. The hydrogen gas is returned to the hydrogen system at very high purity (<1 ppmv total contaminants) and is recycled to the CVD & hydrogenation reactors. The HCl is sent back to the fluid bed reactor. Mixed chlorosilanes are sent back to the distillation train.

<u>Waste Treatment</u>
The Vent Recovery Unit does not generate any direct waste. Hydrogen, HCl, and chlorosilanes are all recycled to other areas of the plant. There is a small liquid stream from the adsorber regeneration that will contain impurities that need to be distilled from the chlorosilanes and sent to treatment and disposal. This process is part of the TCS distillation and purification unit.

<u>Safety Valve Discharge Treatment</u>
Safety valves with either HCl or chlorosilanes will be collected in a PSV discharge header that

is continually purged with nitrogen to keep it dry. This stream, in the event of release, goes to the relief vent scrubber. The relief vent scrubber uses either caustic or lime to neutralize the discharge streams.

5. Question#1 and Answer Highlights from email → Mitsubishi Plant Comparison:

What is the maximum nitric acid and hydrofluoric acid usage rate in pounds or gallons per day in the laboratory?

Acid use is planned to be less than 5 gallons per day for each of hydrofluoric and nitric acid consumption (total less than 10 gal/day). The use of these acids is primarily for lab analysis and sample etching.

APPENDIX C

PTC APPLICATION FORMS

Cover Sheet **Form CS**

DEQ AIR QUALITY PROGRAM
1410 N. Hilton, Boise, ID 83706
For assistance, call the
Air Permit Hotline – 1-877-5PERMIT

PERMIT TO CONSTRUCT APPLICATION

Revision 3
04/03/07

Please see instructions on page 2 before filling out the form.

DEQ USE ONLY
Date Received
Project Number
Payment / Fees Included? Yes ☐ No ☐
Check Number

COMPANY NAME, FACILITY NAME, AND FACILITY ID NUMBER

1. Company Name	Hoku Materials, Inc.		
2. Facility Name	Polysilicon Plant	3. Facility ID No.	005-00058
4. Brief Project Description - One sentence or less	Construction of a 4,000 Mton/yr Polysilicon Production Facility		

PERMIT APPLICATION TYPE

5. ☐ New Facility ☐ New Source at Existing Facility ☐ Unpermitted Existing Source
☒ Modify Existing Source: Permit No.: P-2007.0075 Date Issued: 8/14/07
☐ Required by Enforcement Action: Case No.:____

6. ☒ Minor PTC ☐ Major PTC

FORMS INCLUDED

Included	N/A	Forms	DEQ Verify
☒	☐	Form GI – Facility Information	☐
☒	☐	Form EU0 – Emissions Units General	☐
☒	☐	Form EU1 - Industrial Engine Information Please Specify number of forms attached: _____	☐
☐	☒	Form EU2 - Nonmetallic Mineral Processing Plants Please Specify number of forms attached: _____	☐
☐	☒	Form EU3 - Spray Paint Booth Information Please Specify number of forms attached: _____	☐
☒	☐	Form EU4 - Cooling Tower Information Please Specify number of forms attached: _____	☐
☒	☐	Form EU5 – Boiler Information Please Specify number of forms attached: _____	☐
☐	☒	Form HMAP – Hot Mix Asphalt Plant Please Specify number of forms attached: _____	☐
☐	☐	Form CBP - Concrete Batch Plant Please Specify number of forms attached: _____	☐
☒	☐	Form BCE - Baghouses Control Equipment	☐
☒	☐	Form SCE - Scrubbers Control Equipment	☐
☒	☐	Forms EI-CP1 - EI-CP4 - Emissions Inventory– criteria pollutants (Excel workbook, all 4 worksheets)	☐
☒	☐	PP – Plot Plan	☐
☒	☐	Forms MI1 – MI4 – Modeling (Excel workbook, all 4 worksheets)	☐
☒	☐	Form FRA – Federal Regulation Applicability	☐

DEQ AIR QUALITY PROGRAM
1410 N. Hilton, Boise, ID 83706
For assistance, call the
Air Permit Hotline – 1-877-5PERMIT

PERMIT TO CONSTRUCT APPLICATION

Revision 3
03/26/07

Please see instructions on page 2 before filling out the form.

All information is required. If information is missing, the application will not be processed.

IDENTIFICATION	
1. Company Name	Hoku Materials, Inc.
2. Facility Name (if different than #1)	Polysilicon Plant
3. Facility I.D. No.	005-00058
4. Brief Project Description:	Construction of up to a 4,000 Mton/yr Polysilicon Production Facility
FACILITY INFORMATION	
5. Owned/operated by: (√ if applicable)	☐ Federal government ☐ County government ☐ State government ☐ City government
6. Primary Facility Permit Contact Person/Title	Karl Taft, Chief Technology Officer
7. Telephone Number and Email Address	808.682.7800 ext. 101, ktaft@hokusci.com
8. Alternate Facility Contact Person/Title	Ken Shimada, Project Manager
9. Telephone Number and Email Address	808.682.7800 ext. 132, kshimada@hokusci.com
10. Address to which permit should be sent	Hoku Materials, Inc., One Hoku Way
11. City/State/Zip	Pocatello, ID 83204
12. Equipment Location Address (if different than #10)	
13. City/State/Zip	
14. Is the Equipment Portable?	☐ Yes ☒ No
15. SIC Code(s) and NAISC Code	Primary SIC: 3339 Secondary SIC (if any): NAICS: 327992
16. Brief Business Description and Principal Product	Polysilicon Production Facility
17. Identify any adjacent or contiguous facility that this company owns and/or operates	NA
PERMIT APPLICATION TYPE	
18. Specify Reason for Application	☐ New Facility ☐ New Source at Existing Facility ☐ Unpermitted Existing Source ☒ Modify Existing Source: Permit No.:P-2007-0075 Date Issued: 8/14/07 ☐ Permit Revision ☐ Required by Enforcement Action: Case No.:_____
CERTIFICATION	
IN ACCORDANCE WITH IDAPA 58.01.01.123 (RULES FOR THE CONTROL OF AIR POLLUTION IN IDAHO), I CERTIFY BASED ON INFORMATION AND BELIEF FORMED AFTER REASONABLE INQUIRY, THE STATEMENTS AND INFORMATION IN THE DOCUMENT ARE TRUE, ACCURATE, AND COMPLETE.	
19. Responsible Official's Name/Title	Karl Taft, Chief Technology Officer
20. RESPONSIBLE OFFICIAL SIGNATURE	Karl Taft Date: 3/21/08
21. ☒ Check here to indicate you would like to review a draft permit prior to final issuance.	

DEQ AIR QUALITY PROGRAM
1410 N. Hilton, Boise, ID 83706
For assistance, call the
Air Permit Hotline – 1-877-5PERMIT

PERMIT TO CONSTRUCT APPLICATION

Revision 3
03/26/07

Please see instructions on page 2 before filling out the form.

IDENTIFICATION

Company Name:	Facility Name:	Facility ID No:
Hoku Materials, Inc	Polysilicon Plant	005-00058

Brief Project Description: Construction of a 4,000 Mton/yr Polysilicon Production Facility

APPLICABILITY DETERMINATION

1. Will this project be subject to 1990 CAA Section 112(g)? (Case-by-Case MACT)	☒ NO	☐ YES* * If YES, applicant must submit an application for a case-by-case MACT determination [IAC 567 22-1(3)"b" (8)]
2. Will this project be subject to a New Source Performance Standard? (40 CFR part 60)	☐ NO	☒ YES* *If YES, please identify sub-part: Dc
3. Will this project be subject to a MACT (Maximum Achievable Control Technology) regulation? (40 CFR part 63) THIS ONLY APPLIES IF THE PROJECT EMITS A HAZARDOUS AIR POLLUTANT	☒ NO	☐ YES* *If YES, please identify sub-part: _____
4. Will this project be subject to a NESHAP (National Emission Standards for Hazardous Air Pollutants) regulation? (40 CFR part 61)	☒ NO	☐ YES* *If YES, please identify sub-part: _____
5. Will this project be subject to PSD (Prevention of Significant Deterioration)? (40 CFR section 52.21)	☒ NO	☐ YES
6. Was netting done for this project to avoid PSD?	☒ NO	☐ YES* *If YES, please attach netting calculations

IF YOU ARE UNSURE HOW TO ANSWER ANY OF THESE QUESTIONS, CALL THE AIR PERMIT HOTLINE AT 1-877-5PERMIT

DEQ AIR QUALITY PROGRAM
1410 N. Hilton, Boise, ID 83706
For assistance, call the
Air Permit Hotline - 1-877-5PERMIT

PERMIT TO CONSTRUCT APPLICATION
Revision 3
4/5/2007

Please see instructions on page 2 before filling out the form.

Company Name:	**Hoku Materials, Inc**
Facility Name:	Polysilicon Plant
Facility ID No.:	005-00058
Brief Project Description:	Construction of a 4,000 Mton/yr Polysilicon Production Facility

SUMMARY OF FACILITY WIDE EMISSION RATES FOR CRITERIA POLLUTANTS - POINT SOURCES

1.	2.	3.											
		PM_{10}		SO_2		NO_X		CO		VOC		Lead	
Emissions units	Stack ID	lb/hr	T/yr	lb/hr	T/yr	lb/hr	T/yr	lb/hr	T/yr	lb/hr	T/yr	lb/hr	T/yr
Point Source(s)													
Boiler	1	0.40	1.74	0.03	0.14	5.24	22.94	4.40	19.27	0.29	1.26	0.00	0.00
Hot Oil Heater	2	0.40	1.74	0.03	0.14	5.24	22.94	4.40	19.27	0.29	1.26	0.00	0.00
M.G. Silicon Bin Vent	3	0.14	0.60										
M.G. Silicon Primary Hopper	4	0.03	0.15										
M.G. Silicon Secondary Hopper	5	0.03	0.11										
Lime Storage Silo	6	0.21	0.90										
Cooling Tower	7	1.47	6.43										
Laboratory Venting System	8	0.16	0.70	0.16	0.70	0.96	4.20						
Chlorosilane Venting System	9	1.83	8.01										
Relief Vent System	10	0.73	3.20										
Emergency Generator	11	3.28	0.82	18.97	4.74	112.56	28.14	25.80	6.45	3.31	0.82		
Fire Water Pump	12	1.76	0.44	1.64	0.41	24.80	6.20	5.34	1.34	1.98	0.49		
ame of the emissions unit13													
ame of the emissions unit14													
ame of the emissions unit15													
ame of the emissions unit16													
ame of the emissions unit17													
ame of the emissions unit18													
ame of the emissions unit19													
ame of the emissions unit20													
ame of the emissions unit21													
nsert more rows as needed)													
otal		10.43	24.86	20.83	6.13	148.80	84.43	39.94	46.33	5.86	3.84	0.00	0.00

	DEQ AIR QUALITY PROGRAM 1410 N. Hilton, Boise, ID 83706 For assistance, call the **Air Permit Hotline - 1-877-5PERMIT**	**PERMIT TO CONSTRUCT APPLICATION** Revision 3 4/5/2007

Please see instructions on page 2 before filling out the form.

Company Name:	**Hoku Materials, Inc**
Facility Name:	Polysilicon Plant
Facility ID No.:	005-00058
Brief Project Description:	Construction of a 4,000 Mton/yr Polysilicon Production Facility

SUMMARY OF FACILITY WIDE EMISSION RATES FOR CRITERIA POLLUTANTS - POINT SOURCES

1.	2.	3.											
		PM_{10}		SO_2		NO_X		CO		VOC		Lead	
Emissions units	Stack ID	lb/hr	T/yr	lb/hr	T/yr	lb/hr	T/yr	lb/hr	T/yr	lb/hr	T/yr	lb/hr	T/yr
Point Source(s)													

Instructions for Form EI-CP1

This form is designed to provide the permit writer and air quality modeler with a summary of the criteria pollutant emissions of each emission unit/point located at the facility. This information may be used by the IDEQ to perform an air quality analysis or to review an air quality analysis submitted with the permit application or requested by the IDEQ.

Please fill in the same company name, facility name, facility ID number, and brief project description as on form CS in the boxes provided. This is useful in case any pages of the application get separated.

. Provide the name of all emission units at the facility. This name must match names on other submittals to IDEQ and within this application.

:. Provide the identification number for the stack which the emission unit exits.

:. Provide the emission rate in pounds per hour and tons per year for all criteria pollutants emitted by this point source. In this form, emission rates for a point source are the maximum allowable emissions for both short term (pounds per hour) and long term (tons per year). These emission rates are its permitted limits (if any). Otherwise, potential to emit should be shown. Potential to emit is defined as uncontrolled emissions at maximum design or achievable capacity (whichever is higher) and year-round continuous operation (8760 hours per year) if there are no federally enforceable permit limits on the emission point. If the emission point has or will have control equipment or some other proposed permit limitation such as hours of operation or material usage, the control efficiency or proposed permit limit(s) may be used in calculating potential to emit.

IOTE: Attach a separate sheet of paper, or electronic file, to provide additional documentation on the development of the emission rates. Documentation can include emissions factors, ıroughput, and example calculations.