DEQ AIR QUALITY PROGRAM
1410 N. Hilton, Boise, ID 83706
For assistance, call the
Air Permit Hotline – 1-877-5PERMIT

PERMIT TO CONSTRUCT APPLICATION

Revision 3
04/02/07

Please see instructions on page 2 before filling out the form.

IDENTIFICATION		
Company Name: Bennett Lumber Products, Inc.	**Facility Name:** BLP Princeton	**Facility ID No.:** 057-00008
Brief Project Description:		

IDENTIFICATION				BAGHOUSE			BAGS			
1.	2.	3.	4.	5.	6.	7.	8.	9.	10.	11.
Emission Unit	EU ID No.	CE ID No.	Stack ID No.	Baghouse Manufacturer	Baghouse Model No.	Type	Type	Size (Dia x Ht)	No. of Bags	Air to Cloth
Sawmill Light Sawdust baghouse	P24		P24		Western Pneumatic 63OR	Hooded		unknow n		
					Used IDEQ EF for Wood Products Industry for sanderdust cyclone with baghouse					

Instructions for Form BCE

This form is used by IDEQ to identify the baghouse control equipment in this permit application.

Please fill in the same company name, facility name (if different), facility ID number, and brief project description as on Form CS. This is useful in case any pages of the application are separated.

Provide the following:

1. The name of the emissions unit (EU), exactly the same as it appears on Form EU0.
2. The emissions unit ID No., exactly the same as it appears on Form EU0.
3. Control equipment ID No., exactly the same as it appears on Form EU0.
4. Stack ID No.
5. Name of the baghouse manufacturer.
6. Model number of the baghouse.
7. Type of baghouse (pulse jet, reverse air, etc.).
8. Type of bags (polyester, fiberglass, etc.).
9. Size and dimensions of the bags in feet.
10. Number of bags.
11. Air to cloth ratio.

DEQ AIR QUALITY PROGRAM
1410 N. Hilton, Boise, ID 83706
For assistance, call the
Air Permit Hotline: 1-877-5PERMIT

PERMIT TO CONSTRUCT APPLICATION

Revision 0
04/02/07

Please see instructions on page 3 before filling out the form.

IDENTIFICATION

Company Name:	Bennett Lumber Products, Inc	**Facility Name:**	BLP Princeton	**Facility ID No.:**	057-00008
Brief Project Description:	P-6 form, with baghouse P-24 control. PTC modification to increase boiler PM-10 emission limit and increase throughput through facility limited by kiln throughput limit				

CYCLONE SEPARATOR INFORMATION

Equipment Description

Manufacturer: Western Pneumatics

Model Number: 3' High Eficiency

Dimensions

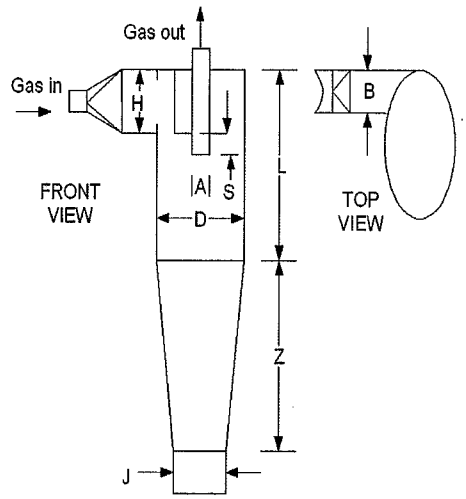

Give dimensions of cyclone. (See sample diagram above.)

1. B:	in.	5. Z:	in.
2. H:	in.	6. D:	in.
3. S:	in.	7. A:	in.
4. L:	in.	8. J:	in.

Particulate Size Distribution Data

Micron range	Particle size distribution weight %	Manufacturer's guaranteed removal efficiency for each micron range
0.5-1.0		
1.0-5.0		
5-10		smaller material (sawdust from sawmill)
10-20		used IDEQs for wood products ind EF as docuemnted in EI
Over 20		

Type of Cyclone ☐ Wet ☒ Dry

Type of Cyclone Unit ☒ Single ☐ Quadruple ☐ Dual ☐ Multiclone

Blower Blower horsepower: hp
Design flow rate: scfm
Draft: ☒ Forced ☐ Induced

Design Criteria Cyclone configuration: ☒ Positive pressure ☐ Negative pressure

Pre-Treatment Device ☐ Cyclone ☐ Knock-out chamber ☐ Precooler ☒ None ☐ Preheater

Post-Treatment Device ☒ Baghouse/Cartridge ☐ HEPA ☐ Other:

Process Stream Characteristics	
Brief Description of Process	.
Flow Data	Gas stream temperature: ambient degrees F Moisture content: wood products have 47% moisture content grams of water/cubic feet (ft^3) of dry air <u>Pressure drop range</u> High: unknown in. H_2O Low: in. H_2O Dew point temperature of process stream: degrees F Inlet flow rate: 2005 ACFM
Dust Collection Device	☒ Pneumatic conveyor ☐ Rotary airlock values ☐ Screw conveyors ☐ Closed container ☐ Double dump ☐ Drag conveyor ☐ Manual discharge device: ☐ Slide gate OR ☐ Hinged doors or drawers
Operating Schedule	Normal: 12 hours/day 5 days/week 50 weeks/year Maximum: 16 hours/day 7 days/week 52 weeks/year

Instructions for Form CYS

For cyclone separators only, this form may be used *in place of* Form EU0 and control equipment forms.

Please fill in the same company name, facility name (if different), facility ID number, and brief project description as on Form CS. This is useful in case any pages of the application are separated.

Equipment Description

The information requested should be found in the operations and maintenance manual supplied by the manufacturer of the cyclone separator.

Brief Description of Process

Please include a process flow diagram and engineering drawing of the filter system and the material processed. In the space provided, indicate what equipment is vented to the cyclone and how material is handled and disposed of.

DEQ AIR QUALITY PROGRAM
1410 N. Hilton, Boise, ID 83706
For assistance, call the
Air Permit Hotline: 1-877-5PERMIT

PERMIT TO CONSTRUCT APPLICATION

Revision 0
04/02/07

Please see instructions on page 3 before filling out the form.

IDENTIFICATION

Company Name:	Bennett Lumber Products, Inc	**Facility Name:**	BLP Princeton	**Facility ID No.:**	057-00008
Brief Project Description:	P11 form. PTC modification to increase boiler PM-10 emission limit and increase throughput through facility limited by kiln throughput limit				

CYCLONE SEPARATOR INFORMATION

Equipment Description

Manufacturer:

Model Number: Unknown manufacturer, 7' cyclone on old planer, installed 1970s or earlier

Dimensions

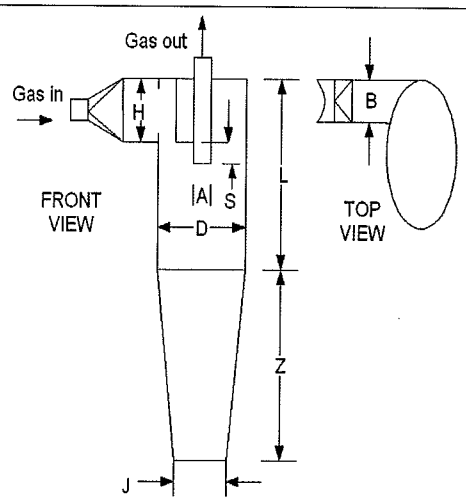

Give dimensions of cyclone. (See sample diagram above.)

1. B:	in.	5. Z:	in.
2. H:	in.	6. D:	in.
3. S:	in.	7. A:	in.
4. L:	in.	8. J:	in.

Particulate Size Distribution Data

Micron range	Particle size distribution weight %	Manufacturer's guaranteed removal efficiency for each micron range
0.5-1.0		
1.0-5.0		
5-10	larger	
10-20	(planer shavings)	
Over 20		

Type of Cyclone ☐ Wet ☒ Dry

Type of Cyclone Unit ☒ Single ☐ Quadruple ☐ Dual ☐ Multiclone

Blower Blower horsepower: unknown hp
Design flow rate: measure flow rate below scfm
Draft: ☒ Forced ☐ Induced

Design Criteria Cyclone configuration: ☒ Positive pressure ☐ Negative pressure

Pre-Treatment Device ☐ Cyclone ☐ Knock-out chamber ☐ Precooler ☒ None ☐ Preheater

Post-Treatment Device ☐ Baghouse/Cartridge ☐ HEPA ☐ Other:

Process Stream Characteristics	
Brief Description of Process	.
Flow Data	Gas stream temperature: ambient degrees F Moisture content: 19% moisture content in post-kiln planer shavings grams of water/cubic feet (ft^3) of dry air <u>Pressure drop range</u> High: unknown in. H_2O Low: in. H_2O Dew point temperature of process stream: degrees F Inlet flow rate: 34605.45 ACFM
Dust Collection Device	☒ Pneumatic conveyor ☐ Rotary airlock values ☐ Screw conveyors ☐ Closed container ☐ Double dump ☐ Drag conveyor ☐ Manual discharge device: ☐ Slide gate OR ☐ Hinged doors or drawers
Operating Schedule	Normal: 2 hours/day 1 days/week 50 weeks/year Maximum: 6 hours/day 3 days/week 50 weeks/year

DEQ AIR QUALITY PROGRAM
1410 N. Hilton, Boise, ID 83706
For assistance, call the
Air Permit Hotline: 1-877-5PERMIT

PERMIT TO CONSTRUCT APPLICATION

Revision 0
04/02/07

Please see instructions on page 3 before filling out the form.

IDENTIFICATION

Company Name:	Bennett Lumber Products, Inc	**Facility Name:**	BLP Princeton	**Facility ID No.:**	057-00008

Brief Project Description: P12 form. PTC modification to increase boiler PM-10 emission limit and increase throughput through facility limited by kiln throughput limit

CYCLONE SEPARATOR INFORMATION

Equipment Description

Manufacturer:

Model Number: Aloha Metal Fabrication, 13.5' cyclone for new planer, in place for >10 years

Dimensions

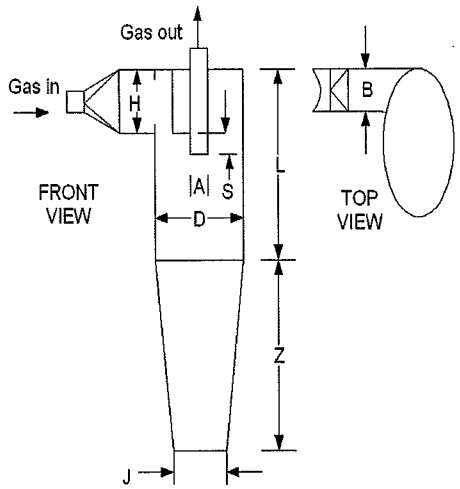

Give dimensions of cyclone. (See sample diagram above.)

1. B:	in.	5. Z:	in.
2. H:	in.	6. D:	in.
3. S:	in.	7. A:	in.
4. L:	in.	8. J:	in.

Particulate Size Distribution Data

Micron range	Particle size distribution weight %	Manufacturer's guaranteed removal efficiency for each micron range
0.5-1.0		
1.0-5.0		
5-10		larger material (planer shavings)
10-20		
Over 20		

Type of Cyclone ☐ Wet ☒ Dry

Type of Cyclone Unit ☒ Single ☐ Quadruple ☐ Dual ☐ Multiclone

Blower Blower horsepower: hp
Design flow rate: flow rate measured summer 07 below scfm
Draft: ☒ Forced ☐ Induced

Design Criteria Cyclone configuration: ☒ Positive pressure ☐ Negative pressure

Pre-Treatment Device ☐ Cyclone ☐ Knock-out chamber ☐ Precooler ☒ None ☐ Preheater

Post-Treatment Device ☐ Baghouse/Cartridge ☐ HEPA ☐ Other:

Process Stream Characteristics	
Brief Description of Process	
Flow Data	Gas stream temperature: ambient degrees F Moisture content: shavings material is posy dry kiln, moisture content approx 19% grams of water/cubic feet (ft^3) of dry air Pressure drop range High: in. H_2O Low: in. H_2O Dew point temperature of process stream: degrees F Inlet flow rate: 43000 ACFM
Dust Collection Device	☒ Pneumatic conveyor ☐ Rotary airlock values ☐ Screw conveyors ☐ Closed container ☐ Double dump ☐ Drag conveyor ☐ Manual discharge device: ☐ Slide gate OR ☐ Hinged doors or drawers
Operating Schedule	Normal: 10 hours/day 6 days/week 50 weeks/year Maximum: 14 hours/day 7 days/week 52 weeks/year

DEQ AIR QUALITY PROGRAM
1410 N. Hilton, Boise, ID 83706
For assistance, call the
Air Permit Hotline: 1-877-5PERMIT

PERMIT TO CONSTRUCT APPLICATION

Revision 0
04/02/07

Please see instructions on page 3 before filling out the form.

IDENTIFICATION

Company Name:	Bennett Lumber Products, Inc	**Facility Name:**	BLP Princeton	**Facility ID No.:**	057-00008
Brief Project Description:	P-13 form. PTC modification to increase boiler PM-10 emission limit and increase throughput through facility limited by kiln throughput limit				

CYCLONE SEPARATOR INFORMATION

Equipment Description

Manufacturer:

Model Number: Unknown manufacturer, 7' cyclone atop shavings truck bin, installed by 1970s

Dimensions

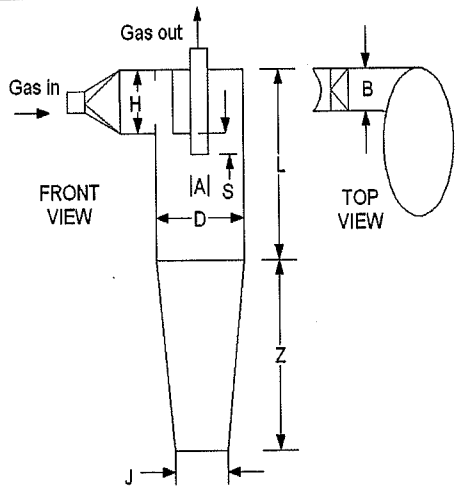

Give dimensions of cyclone. (See sample diagram above.)

1. B:	in.	5. Z:	in.
2. H:	in.	6. D:	in.
3. S:	in.	7. A:	in.
4. L:	in.	8. J:	in.

Particulate Size Distribution Data

Micron range	Particle size distribution weight %	Manufacturer's guaranteed removal efficiency for each micron range
0.5-1.0		
1.0-5.0		
5-10		Larger (planer shavings)
10-20		
Over 20		

Type of Cyclone ☐ Wet ☒ Dry

Type of Cyclone Unit ☒ Single ☐ Quadruple ☐ Dual ☐ Multiclone

Blower Blower horsepower: hp
Design flow rate: flow rate measured summer 07 below scfm
Draft: ☐ Forced ☐ Induced

Design Criteria Cyclone configuration: ☒ Positive pressure ☐ Negative pressure

Pre-Treatment Device ☐ Cyclone ☐ Knock-out chamber ☐ Precooler ☒ None ☐ Preheater

Post-Treatment Device ☐ Baghouse/Cartridge ☐ HEPA ☐ Other:

Process Stream Characteristics	
Brief Description of Process	
Flow Data	Gas stream temperature: ambient degrees F Moisture content: Planer material is post kiln, moisture content approx 19% grams of water/cubic feet (ft^3) of dry air Pressure drop range High: in. H_2O Low: in. H_2O Dew point temperature of process stream: degrees F Inlet flow rate: 13030 ACFM
Dust Collection Device	☒ Pneumatic conveyor ☐ Rotary airlock values ☐ Screw conveyors ☐ Closed container ☐ Double dump ☐ Drag conveyor ☐ Manual discharge device: ☐ Slide gate OR ☐ Hinged doors or drawers
Operating Schedule	Normal: 10 hours/day 6 days/week 50 weeks/year Maximum: 13.5 hours/day 7 days/week 50 weeks/year

DEQ AIR QUALITY PROGRAM
1410 N. Hilton, Boise, ID 83706
For assistance, call the
Air Permit Hotline: 1-877-5PERMIT

PERMIT TO CONSTRUCT APPLICATION

Revision 0
04/02/07

Please see instructions on page 3 before filling out the form.

IDENTIFICATION

Company Name:	Bennett Lumber Products, Inc	**Facility Name:**	BLP Princeton	**Facility ID No.:**	057-00008
Brief Project Description:	P14 form. PTC modification to increase boiler PM-10 emission limit and increase throughput through facility limited by kiln throughput limit				

CYCLONE SEPARATOR INFORMATION

Equipment Description

Manufacturer:

Model Number: Manufactyrer Aloha Metal Fabrication, 8' cyclone, in place since 1970s

Dimensions

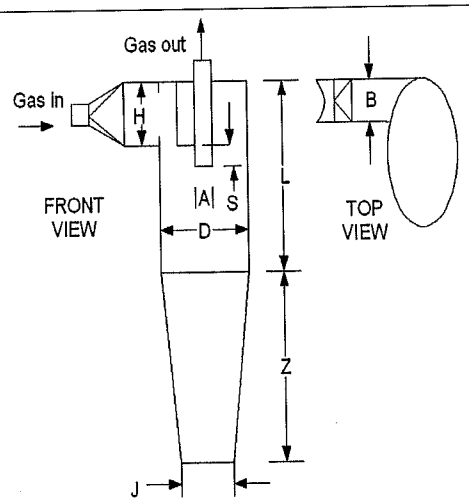

Give dimensions of cyclone. (See sample diagram above.)

1. B:	in.	5. Z:	in.
2. H:	in.	6. D:	in.
3. S:	in.	7. A:	in.
4. L:	in.	8. J:	in.

Particulate Size Distribution Data

Micron range	Particle size distribution weight %	Manufacturer's guaranteed removal efficiency for each micron range
0.5-1.0		
1.0-5.0		
5-10		planer shavings (larger particles)
10-20		
Over 20		

Type of Cyclone ☐ Wet ☒ Dry

Type of Cyclone Unit ☒ Single ☐ Quadruple ☐ Dual ☐ Multiclone

Blower Blower horsepower: hp
Design flow rate: measured flow rate below scfm
Draft: ☒ Forced ☐ Induced

Design Criteria Cyclone configuration: ☒ Positive pressure ☐ Negative pressure

Pre-Treatment Device ☐ Cyclone ☐ Knock-out chamber ☐ Precooler ☒ None ☐ Preheater

Post-Treatment Device ☐ Baghouse/Cartridge ☐ HEPA ☐ Other:

Process Stream Characteristics	
Brief Description of Process	.
Flow Data	Gas stream temperature: ambient degrees F Moisture content: planer shavings material has approx 19% moisture content grams of water/cubic feet (ft^3) of dry air <u>Pressure drop range</u> High: in. H_2O Low: in. H_2O Dew point temperature of process stream: degrees F Inlet flow rate: 43000 ACFM
Dust Collection Device	☒ Pneumatic conveyor ☐ Rotary airlock values ☐ Screw conveyors ☐ Closed container ☐ Double dump ☐ Drag conveyor ☐ Manual discharge device: ☐ Slide gate OR ☐ Hinged doors or drawers
Operating Schedule	Normal: 10 hours/day 6 days/week 50 weeks/year Maximum: 14 hours/day 7 days/week 50 weeks/year

DEQ AIR QUALITY PROGRAM
1410 N. Hilton, Boise, ID 83706
For assistance, call the
Air Permit Hotline – 1-877-5PERMIT

PERMIT TO CONSTRUCT APPLICATION

Revision 3
03/26/07

Please see instructions on page 2 before filling out the form.

IDENTIFICATION			
Company Name:	Bennett Lumber Products, Inc.	**Facility Name:** BLP Princeton	**Facility ID No.:** 057-00008
Brief Project Description:	PTC modification to increase boiler PM-10 emission limit and increase throughput through facility limited by kiln throughput limit		

IDENTIFICATION				SCRUBBER					
1.	2.	3.	4.	5.	6.	7.	8.	9	10.
Emission Unit	EU ID No.	CE ID No.	Stack ID No.	Manufacturer Name	Model No.	Type	Dimensions In Feet (Ht x Dia x L)	Water Flow (gpm)	Pressure Drop (in H_2O)
Boiler stack scrubber	**B1**		**B1**	**Zurn Industries**		**Venturi**		**500**	**4.0 - 6.0**

Instructions for Form SCE

This information is used by DEQ to identify the scrubber control equipment in this permit application.

Please fill in the same company name, facility name (if different), facility ID number, and brief project description as on Form CS. This is useful in case any pages of the application are separated.

Provide the following:

1. The name of the emissions unit, exactly the same as it appears on Form EU0.
2. The emissions unit ID No., exactly the same as it appears on Form EU0.
3. Control equipment ID No., exactly the same as it appears on Form EU0.
4. Stack ID No.
5. Name of the scrubber manufacturer.
6. Model number of the scrubber.
7. Type of scrubber (e.g., spray chamber, venturi, packed bed, etc.).
8. Dimensions in feet (height x diameter x length)
9. Scrubber water flow to scrubber (gallons per minute).
10. Pressure drop across scrubber.

DEQ AIR QUALITY PROGRAM
1410 N. Hilton, Boise, ID 83706
For assistance, call the
Air Permit Hotline – 1-877-5PERMIT

PERMIT TO CONSTRUCT APPLICATION

Revision 3
03/26/07

Please see instructions on page 2 before filling out the form.

IDENTIFICATION

Company Name:	Facility Name:	Facility ID No:
Bennett Lumber Products, Inc.	BLP Princeton	057-00008

Brief Project Description: PTC modification to increase boiler PM-10 emission limit and increase throughput

APPLICABILITY DETERMINATION

1. Will this project be subject to 1990 CAA Section 112(g)? (Case-by-Case MACT)	☒ NO	☐ YES* * If YES, applicant must submit an application for a case-by-case MACT determination [IAC 567 22-1(3)"b" (8)]
2. Will this project be subject to a New Source Performance Standard? (40 CFR part 60)	☒ NO	☐ YES* *If YES, please identify sub-part: grandfatehered bef dB, dC
3. Will this project be subject to a MACT (Maximum Achievable Control Technology) regulation? (40 CFR part 63) THIS ONLY APPLIES IF THE PROJECT EMITS A HAZARDOUS AIR POLLUTANT	☒ NO	☐ YES* *If YES, please identify sub-part: _____
4. Will this project be subject to a NESHAP (National Emission Standards for Hazardous Air Pollutants) regulation? (40 CFR part 61)	☒ NO	☐ YES* *If YES, please identify sub-part: _____
5. Will this project be subject to PSD (Prevention of Significant Deterioration)? (40 CFR section 52.21)	☒ NO	☐ YES
6. Was netting done for this project to avoid PSD?	☒ NO	☐ YES* *If YES, please attach netting calculations

IF YOU ARE UNSURE HOW TO ANSWER ANY OF THESE QUESTIONS, CALL THE AIR PERMIT HOTLINE AT 1-877-5PERMIT

Instructions for Form FRA

This form is designed to provide the review engineer information regarding applicable federal regulations. This project may be subject to a federal regulation.

Please put your company name, facility name (if different), facility ID number, and brief project description in the boxes provided. This is useful in case any pages of the application get separated.

1. The 112(g) provision is a transitional measure to ensure that facilities protect the public from hazardous air pollutants until EPA issues MACT standards that apply to the facilities. If this project is already subject to a MACT regulation, it will not be subject to the provisions of 112(g).
2. New Source Performance Standards are federal regulations that apply to a wide range of sources of criteria air pollutants. To locate the rule, go to: http://www.access.gpo.gov/nara/cfr/waisidx_01/40cfr60_01.html
3. MACT regulations apply to sources of hazardous air pollutants. To locate the rule, go to: www.epa.gov/ttn/atw/mactfnl.html.
4. NESHAP regulations apply to sources of the following pollutants: beryllium, mercury, vinyl chloride, radionuclides, benzene, asbestos, and arsenic. To locate the rule, go to: www.access.gpo.gov/nara/cfr/waisidx_02/40cfr61_02.html
5. If facility is a PSD major source and the net emissions increase from this project exceeds significant levels (as defined by 40 CFR 52.21), this project will be subject to prevention of significant deterioration (PSD) regulations. Please contact DEQ prior to application submission.
6. Indicate whether emissions netting was used in the PSD applicability determination.

SECTION 3 — PROCESS AND MANUFACTURING OPERATIONS

DEQ USE ONLY			
DEQ PLANT ID CODE: - -	DEQ PROCESS CODE:	DEQ STACK ID CODE:	DEQ BUILDING ID CODE:
PRIMARY SCC: - - -	SECONDARY SCC: - - -	DEQ SEGMENT CODE:	

PART A — GENERAL INFORMATION

PROCESS CODE OR DESCRIPTION	STACK DESCRIPTION	BUILDING DESCRIPTION
P6 Baghouse Cyclone		Boiler

MANUFACTURER	MODEL	DATE INSTALLED OR LAST MODIFIE
Western Pneumatics	3 Ft High Eff	07/00/91

PROCESSING DATA

PROCESS STREAM	MATERIAL DESCRIPTION	MAXIMUM HOURLY RATE	ACTUAL HOURLY RATE	ACTUAL ANNUAL RATE	UNITS
INPUT	Wood Dust	.0264	.022	132.	Green Tons
PRODUCT OUTPU	Hog Fuel	.0264	.022	132.	Green Tons
WASTE OUTPUT		.	.	.	
RECYCLE		.	.	.	

POTENTIAL HAPS IN PROCESS STREAMS

HAP DESCRIPTION	HAP CAS NUMBER	FRACTION IN INPUT STREAM BY WEIGHT	FRACTION IN PRODUCT STREAM BY WEIGHT	FRACTION IN WASTE STREAM BY WEIGHT	FRACTION IN RECYCLE STREAM BY WEIGHT
	- -	. E-	. E-	. E-	. E-
	- -	. E-	. E-	. E-	. E-
	- -	. E-	. E-	. E-	. E-
	- -	. E-	. E-	. E-	. E-

Sum 0-1

SECTION 3 PROCESS AND MANUFACTURING OPERATIONS

DEQ USE ONLY

DEQ PLANT ID CODE	DEQ PROCESS CODE	DEQ STACK ID CODE	DEQ BUILDING ID CODE
- -			
PRIMARY SCC	SECONDARY SCC	DEQ SEGMENT CODE	
- - -	- - -		

PART A GENERAL INFORMATION

PROCESS CODE OR DESCRIPTION	STACK DESCRIPTION	BUILDING DESCRIPTION
P7 Sawdust Cyclone		Boiler
MANUFACTURER	MODEL	DATE INSTALLED OR LAST MODIFIED
Aloha Metal Fab	7 Foot	01/00/78

PROCESSING DATA

PROCESS STREAM	MATERIAL DESCRIPTION	MAXIMUM HOURLY RATE	ACTUAL HOURLY RATE	ACTUAL ANNUAL RATE	UNITS
INPUT	Sawdust	0.40	0.33	2000.	BDT
PRODUCT OUTPU	Sawdust	0.40	0.33	2000.	BDT
WASTE OUTPUT		.	.	.	
RECYCLE		.	.	.	

POTENTIAL HAPS IN PROCESS STREAMS

HAP DESCRIPTION	HAP CAS NUMBER	FRACTION IN INPUT STREAM BY WEIGHT	FRACTION IN PRODUCT STREAM BY WEIGHT	FRACTION IN WASTE STREAM BY WEIGHT	FRACTION IN RECYCLE STREAM BY WEIGHT
NA	- -	. E -	. E -	. E -	. E -
	- -	. E -	. E -	. E -	. E -
	- -	. E -	. E -	. E -	. E -
	- -	. E -	. E -	. E -	. E -

SECTION 3 — PROCESS AND MANUFACTURING OPERATIONS

DEQ USE ONLY

DEQ PLANT ID CODE	DEQ PROCESS CODE	DEQ STACK ID CODE	DEQ BUILDING ID CODE
- -			
PRIMARY SCC	SECONDARY SCC	DEQ SEGMENT CODE	
- - -	- - -		

PART A — GENERAL INFORMATION

PROCESS CODE OR DESCRIPTION	STACK DESCRIPTION	BUILDING DESCRIPTION
P11 Shavings Cyclone		For Old Planer

MANUFACTURER	MODEL	DATE INSTALLED OR LAST MODIFIE
Unk	7 Foot	00/00/61

PROCESSING DATA

PROCESS STREAM	MATERIAL DESCRIPTION	MAXIMUM HOURLY RATE	ACTUAL HOURLY RATE	ACTUAL ANNUAL RATE	UNITS
INPUT	Shavings	0.9	0.74	664.	BDT
PRODUCT OUTPUT		.	.	.	
WASTE OUTPUT		.	.	.	
RECYCLE		.	.	.	

POTENTIAL HAPS IN PROCESS STREAMS

HAP DESCRIPTION	HAP CAS NUMBER	FRACTION IN INPUT STREAM BY WEIGHT	FRACTION IN PRODUCT STREAM BY WEIGHT	FRACTION IN WASTE STREAM BY WEIGHT	FRACTION IN RECYCLE STREAM BY WEIGHT
NA	- -	. E -	. E -	. E -	. E -
	- -	. E -	. E -	. E -	. E -
	- -	. E -	. E -	. E -	. E -
	- -	. E -	. E -	. E -	. E -

SECTION 3 PROCESS AND MANUFACTURING OPERATIONS

\c /ai~fsc

DEQ USE ONLY			
DEQ PLANT ID CODE	DEQ PROCESS CODE	DEQ STACK ID CODE	DEQ BUILDING ID CODE
PRIMARY SCC	SECONDARY SCC	DEQ SEGMENT CODE	

PART A GENERAL INFORMATION

PROCESS CODE OR DESCRIPTION	STACK DESCRIPTION	BUILDING DESCRIPTION
P12 Shavings Cyclone	NA	For New Planer

MANUFACTURER	MODEL	DATE INSTALLED OR LAST MODIFIED
Aloha Metal Fab	13.5 Foot	03/00/7

PROCESSING DATA

PROCESS STREAM	MATERIAL DESCRIPTION	MAXIMUM HOURLY RATE	ACTUAL HOURLY RATE	ACTUAL ANNUAL RATE	UNITS
INPUT	Shavings	7.4	6.17	33909.	BDT
PRODUCT OUTPU	Shavings	7.4	6.17	33909.	BDT
WASTE OUTPUT		.	.	.	
RECYCLE		.	.	.	

POTENTIAL HAPS IN PROCESS STREAMS

HAP DESCRIPTION	HAP CAS NUMBER	FRACTION IN INPUT STREAM BY WEIGHT	FRACTION IN PRODUCT STREAM BY WEIGHT	FRACTION IN WASTE STREAM BY WEIGHT	FRACTION IN RECYCLE STREAM BY WEIGHT
	- -	.E-	.E-	.E-	.E-
	- -	.E-	.E-	.E-	.E-
	- -	.E-	.E-	.E-	.E-
	- -	.E-	.E-	.E-	.E-

SECTION 3 PROCESS AND MANUFACTURING OPERATIONS

DEQ USE ONLY

DEQ PLANT ID CODE	DEQ PROCESS CODE	DEQ STACK ID CODE	DEQ BUILDING ID CODE
- -			
PRIMARY SCC	SECONDARY SCC	DEQ SEGMENT CODE	
- - -	- - -		

PART A GENERAL INFORMATION

PROCESS CODE OR DESCRIPTION	STACK DESCRIPTION	BUILDING DESCRIPTION
P13 Shavings Cyclone		Truck Bin
MANUFACTURER	**MODEL**	**DATE INSTALLED OR LAST MODIFIED**
Unknown	7 Foot	10/00/74

PROCESSING DATA

PROCESS STREAM	MATERIAL DESCRIPTION	MAXIMUM HOURLY RATE	ACTUAL HOURLY RATE	ACTUAL ANNUAL RATE	UNITS
INPUT	Shavings	5.12	4.27	23500.	BDT
PRODUCT OUTPUT		.	.	.	
WASTE OUTPUT		.	.	.	
RECYCLE		.	.	.	

POTENTIAL HAPS IN PROCESS STREAMS

HAP DESCRIPTION	HAP CAS NUMBER	FRACTION IN INPUT STREAM BY WEIGHT	FRACTION IN PRODUCT STREAM BY WEIGHT	FRACTION IN WASTE STREAM BY WEIGHT	FRACTION IN RECYCLE STREAM BY WEIGHT
	- -	. E -	. E -	. E -	. E -
	- -	. E -	. E -	. E -	. E -
	- -	. E -	. E -	. E -	. E -
	- -	. E -	. E -	. E -	. E -

SECTION 3 — PROCESS AND MANUFACTURING OPERATIONS

DEQ USE ONLY

DEQ PLANT ID CODE	DEQ PROCESS CODE	DEQ STACK ID CODE	DEQ BUILDING ID CODE
- -			
PRIMARY SCC	SECONDARY SCC	DEQ SEGMENT CODE	
- - -	- - -		

PART A — GENERAL INFORMATION

PROCESS CODE OR DESCRIPTION	STACK DESCRIPTION	BUILDING DESCRIPTION
P14 Shavings Cyclone		Boiler

MANUFACTURER	MODEL	DATE INSTALLED OR LAST MODIFIED
Aloha Metal Fab	8 Foot	01/00/78

PROCESSING DATA

PROCESS STREAM	MATERIAL DESCRIPTION	MAXIMUM HOURLY RATE	ACTUAL HOURLY RATE	ACTUAL ANNUAL RATE	UNITS
INPUT	Shavings	2.42	2.01	11073.	BDT
PRODUCT OUTPUT		.	.	.	
WASTE OUTPUT		.	.	.	
RECYCLE		.	.	.	

POTENTIAL HAPS IN PROCESS STREAMS

HAP DESCRIPTION	HAP CAS NUMBER	FRACTION IN INPUT STREAM BY WEIGHT	FRACTION IN PRODUCT STREAM BY WEIGHT	FRACTION IN WASTE STREAM BY WEIGHT	FRACTION IN RECYCLE STREAM BY WEIGHT
NA	- -	. E -	. E -	. E -	. E -
	- -	. E -	. E -	. E -	. E -
	- -	. E -	. E -	. E -	. E -
	- -	. E -	. E -	. E -	. E -

SECTION 3 — PROCESS AND MANUFACTURING OPERATIONS

DEQ USE ONLY

DEQ PLANT ID CODE	DEQ PROCESS CODE	DEQ STACK ID CODE	DEQ BUILDING ID CODE
- -			
PRIMARY SCC	SECONDARY SCC	DEQ SEGMENT CODE	
- - -	- - -		

PART A — GENERAL INFORMATION

	STACK DESCRIPTION	BUILDING DESCRIPTION
P15 Dry Kiln #1	Humid Ctld Lids	Dry Kiln #

MANUFACTURER	MODEL	DATE INSTALLED OR LAST MODIFIE
Moore-Dry Kiln	73' Dbl Track	06/00/72

PROCESSING DATA

PROCESS STREAM	MATERIAL DESCRIPTION	MAXIMUM HOURLY RATE	ACTUAL HOURLY RATE	ACTUAL ANNUAL RATE	UNITS
INPUT	Wet Lumber	3.42	2.85	24244.	MBF LS
PRODUCT OUTPU	Dry Lumber	3.42	2.85	24244.	MBF LS
WASTE OUTPUT		.	.	.	
RECYCLE		.	.	.	

POTENTIAL HAPS IN PROCESS STREAMS

HAP DESCRIPTION	HAP CAS NUMBER	FRACTION IN INPUT STREAM BY WEIGHT	FRACTION IN PRODUCT STREAM BY WEIGHT	FRACTION IN WASTE STREAM BY WEIGHT	FRACTION IN RECYCLE STREAM BY WEIGHT
Acetaldehyde	- -	.E-	.E-	.E-	.E-
Formaldehyde	- -	.E-	.E-	.E-	.E-
Methanol	- -	.E-	.E-	.E-	.E-
Propionaldehyde	- -	.E-	.E-	.E-	.E-

0

SECTION 3 PROCESS AND MANUFACTURING OPERATIONS

DEQ USE ONLY			
DEQ PLANT ID CODE	DEQ PROCESS CODE	DEQ STACK ID CODE	DEQ BUILDING ID CODE
PRIMARY SCC	SECONDARY SCC	DEQ SEGMENT CODE	

PART A GENERAL INFORMATION

PROCESS CODE OR DESCRIPTION	STACK DESCRIPTION	BUILDING DESCRIPTION
P16 Dry Kiln #2	Humid Ctld Lids	Dry Kiln #2

MANUFACTURER	MODEL	DATE INSTALLED OR LAST MODIFIE
Moore-Dry Kiln	73' Dbl Track	06/00/64

PROCESSING DATA

PROCESS STREAM	MATERIAL DESCRIPTION	MAXIMUM HOURLY RATE	ACTUAL HOURLY RATE	ACTUAL ANNUAL RATE	UNITS
INPUT	Wet Lumber	3.42	2.85	24244.	MBF LS
PRODUCT OUTPU	Dry Lumber	3.42	2.85	24244.	MBF LS
WASTE OUTPUT		.	.	.	
RECYCLE		.	.	.	

POTENTIAL HAPS IN PROCESS STREAMS

HAP DESCRIPTION	HAP CAS NUMBER	FRACTION IN INPUT STREAM BY WEIGHT	FRACTION IN PRODUCT STREAM BY WEIGHT	FRACTION IN WASTE STREAM BY WEIGHT	FRACTION IN RECYCLE STREAM BY WEIGHT
Acetaldehyde	- -	. E-	. E-	. E-	. E-
Formaldehyde	- -	. E-	. E-	. E-	. E-
Methanol	- -	. E-	. E-	. E-	. E-
Propionaldehyde	- -	. E-	. E-	. E-	. E-

SECTION 3 PROCESS AND MANUFACTURING OPERATIONS

DEQ USE ONLY			
DEQ PLANT ID CODE	DEQ PROCESS CODE	DEQ STACK ID CODE	DEQ BUILDING ID CODE
PRIMARY SCC	SECONDARY SCC	DEQ SEGMENT CODE	

PART A GENERAL INFORMATION

PROCESS CODE OR DESCRIPTION	STACK DESCRIPTION	BUILDING DESCRIPTION
P17 Dry Kiln #3	Humid Ctld Lid	Dry Kiln #3

MANUFACTURER	MODEL	DATE INSTALLED OR LAST MODIFIE
Lumber Systems Inc	73 Ft Sgl Track	03/00/83

PROCESSING DATA

PROCESS STREAM	MATERIAL DESCRIPTION	MAXIMUM HOURLY RATE	ACTUAL HOURLY RATE	ACTUAL ANNUAL RATE	UNITS
INPUT	Wet Lumber	1.71	1.43	12122.	MBF LS
PRODUCT OUTPU	Dry Lumber	1.71	1.43	12122.	MBF LS
WASTE OUTPUT		.	.	.	
RECYCLE		.	.	.	

POTENTIAL HAPS IN PROCESS STREAMS

HAP DESCRIPTION	HAP CAS NUMBER	FRACTION IN INPUT STREAM BY WEIGHT	FRACTION IN PRODUCT STREAM BY WEIGHT	FRACTION IN WASTE STREAM BY WEIGHT	FRACTION IN RECYCLE STREAM BY WEIGHT
Acetaldehyde	- -	.E-	.E-	.E-	.E-
Formaldehyde	- -	.E-	.E-	.E-	.E-
Methanol	- -	.E-	.E-	.E-	.E-
Propionaldehyde	- -	.E-	.E-	.E-	.E-

SECTION 3 — PROCESS AND MANUFACTURING OPERATIONS

DEQ USE ONLY			
DEQ PLANT ID CODE	DEQ PROCESS CODE	DEQ STACK ID CODE	DEQ BUILDING ID CODE
- -			
PRIMARY SCC	SECONDARY SCC	DEQ SEGMENT CODE	
- - -	- - -		

PART A — GENERAL INFORMATION

PROCESS CODE OR DESCRIPTION	STACK DESCRIPTION	BUILDING DESCRIPTION
P18 Dry Kiln #4	Humid Ctld Lids	Dry Kiln #4
MANUFACTURER	**MODEL**	**DATE INSTALLED OR LAST MODIFIE**
Lumber Systems Inc	73' Double Track	06/00/77

PROCESSING DATA

PROCESS STREAM	MATERIAL DESCRIPTION	MAXIMUM HOURLY RATE	ACTUAL HOURLY RATE	ACTUAL ANNUAL RATE	UNITS
INPUT	Wet Lumber	3.42	2.85	24244.	MBF LS
PRODUCT OUTPU	Dry Lumber	3.42	2.85	24244.	MBF LS
WASTE OUTPUT		.	.	.	
RECYCLE		.	.	.	

POTENTIAL HAPS IN PROCESS STREAMS

HAP DESCRIPTION	HAP CAS NUMBER	FRACTION IN INPUT STREAM BY WEIGHT	FRACTION IN PRODUCT STREAM BY WEIGHT	FRACTION IN WASTE STREAM BY WEIGHT	FRACTION IN RECYCLE STREAM BY WEIGHT
Acetaldehyde	- -	. E-	. E-	. E-	. E-
Formaldehyde	- -	. E-	. E-	. E-	. E-
Methanol	- -	. E-	. E-	. E-	. E-
Propionaldehyde	- -	. E-	. E-	. E-	. E-

SECTION 3 — PROCESS AND MANUFACTURING OPERATIONS

DEQ USE ONLY			
DEQ PLANT ID CODE: - -	DEQ PROCESS CODE:	DEQ STACK ID CODE:	DEQ BUILDING ID CODE:
PRIMARY SCC: - - -	SECONDARY SCC: - - -	DEQ SEGMENT CODE:	

PART A — GENERAL INFORMATION

PROCESS CODE OR DESCRIPTION	STACK DESCRIPTION	BUILDING DESCRIPTION
P19 Dry Kiln #5	Humid Cld Lids	Dry Kiln #5

MANUFACTURER	MODEL	DATE INSTALLED OR LAST MODIFIE
Lumber Systems Inc	73' Double Track	06/00/7

PROCESSING DATA

PROCESS STREAM	MATERIAL DESCRIPTION	MAXIMUM HOURLY RATE	ACTUAL HOURLY RATE	ACTUAL ANNUAL RATE	UNITS
INPUT	Wet Lumber	3.42	2.85	24244.	MBF LS
PRODUCT OUTP	Dry Lumber	3.42	2.85	24244.	MBF LS
WASTE OUTPUT		.	.	.	
RECYCLE		.	.	.	

POTENTIAL HAPS IN PROCESS STREAMS

HAP DESCRIPTION	HAP CAS NUMBER	FRACTION IN INPUT STREAM BY WEIGHT	FRACTION IN PRODUCT STREAM BY WEIGHT	FRACTION IN WASTE STREAM BY WEIGHT	FRACTION IN RECYCLE STREAM BY WEIGHT
Acetaldehyde	- -	.E-	.E-	.E-	.E-
Formaldehyde	- -	.E-	.E-	.E-	.E-
Methanol	- -	.E-	.E-	.E-	.E-
Propionaldehyde	- -	.E-	.E-	.E-	.E-

SECTION 3 — PROCESS AND MANUFACTURING OPERATIONS

DEQ USE ONLY

DEQ PLANT ID CODE: - -

PRIMARY SCC: - - -

DEQ USE ONLY

DEQ PROCESS CODE:

SECONDARY SCC: - - -

DEQ STACK ID CODE:

DEQ SEGMENT CODE:

DEQ E

PART A — GENERAL INFORMATION

PROCESS CODE OR DESCRIPTION: P20 Dry Kiln #6

STACK DESCRIPTION: Humid Ctld Lids

BUILDING DESCRIPTION: Dry Kiln #6

MANUFACTURER: Lumber Systems Inc

MODEL: 73' Double Track

DATE INSTA: 01/0

PROCESSING DATA

PROCESS STREAM	MATERIAL DESCRIPTION	MAXIMUM HOURLY RATE	ACTUAL HOURLY RATE	ACTUAL ANNUAL RATE	UNITS
INPUT	Wet Lumber	3.42	2.85	2424 44.	M
PRODUCT OUTPU	Dry Lumber	3.42	2.85	2424 44.	M
WASTE OUTPUT		.	.	.	
RECYCLE		.	.	.	

POTENTIAL HAPS IN PROCESS STREAMS

HAP DESCRIPTION	HAP CAS NUMBER	FRACTION IN INPUT STREAM BY WEIGHT	FRACTION IN PRODUCT STREAM BY WEIGHT	FRACTION IN WASTE STREAM BY WEIGHT
Acetaldehyde	- -	. E-	. E-	. E-
Formaldehyde	- -	. E-	. E-	. E-
Methanol	- -	. E-	. E-	. E-
Propionaldehyde	- -	. E-	. E-	. E-

S

BUILDING ID CODE

\c /ai

LLED OR LAST MODIFIED

0 / 8 9

B	F		L	S			
B	F		L	S			

FRACTION IN RECYCLE STREAM BY WEIGHT

	.		E	-		
	.		E	-		
	.		E	-		
	.		E	-		

SECTION 3 PROCESS AND MANUFACTURING OPERATIONS

DEQ USE ONLY

DEQ PLANT ID CODE	DEQ PROCESS CODE	DEQ STACK ID CODE	DEQ BUILDING ID CODE
- -			
PRIMARY SCC	SECONDARY SCC	DEQ SEGMENT CODE	
- - -	- - -		

PART A GENERAL INFORMATION

PROCESS CODE OR DESCRIPTION	STACK DESCRIPTION	BUILDING DESCRIPTION
P24 Baghouse	Hooded	NA

MANUFACTURER	MODEL	DATE INSTALLED OR LAST MODIFIE
Western Pneumatics	630R	07/00/9

PROCESSING DATA

PROCESS STREAM	MATERIAL DESCRIPTION	MAXIMUM HOURLY RATE	ACTUAL HOURLY RATE	ACTUAL ANNUAL RATE	UNITS
INPUT	Wood Dust	0.038	0.0317	132.0	Green Tons
PRODUCT OUTPU	Hog Fuel	0.038	0.0317	132.0	Green Tons
WASTE OUTPUT					
RECYCLE					

POTENTIAL HAPS IN PROCESS STREAMS

HAP DESCRIPTION	HAP CAS NUMBER	FRACTION IN INPUT STREAM BY WEIGHT	FRACTION IN PRODUCT STREAM BY WEIGHT	FRACTION IN WASTE STREAM BY WEIGHT	FRACTION IN RECYCLE STREAM BY WEIGHT
NA	- -	. E -	. E -	. E -	. E -
	- -	. E -	. E -	. E -	. E -
	- -	. E -	. E -	. E -	. E -
	- -	. E -	. E -	. E -	. E -

SECTION 3 — PROCESS AND MANUFACTURING OPERATIONS

DEQ USE ONLY

DEQ PLANT ID CODE	DEQ PROCESS CODE	DEQ STACK ID CODE	DEQ E
- -			
PRIMARY SCC	SECONDARY SCC	DEQ SEGMENT CODE	
- - -	- - -		

PART A — GENERAL INFORMATION

PROCESS CODE OR DESCRIPTION	STACK DESCRIPTION	BUILDING DESCRIPTION
P25 Dry Kiln #7	Humid Ctld Lids	Dry Kiln #7
MANUFACTURER	MODEL	DATE INSTA
Moore	73' Double Track	2005

PROCESSING DATA

PROCESS STREAM	MATERIAL DESCRIPTION	MAXIMUM HOURLY RATE	ACTUAL HOURLY RATE	ACTUAL ANNUAL RATE	UNITS
INPUT	Wet Lumber	3.42	2.85	2424440.	M
PRODUCT OUTPU	Dry Lumber	3.42	2.85	2424440.	M
WASTE OUTPUT		.	.	.	
RECYCLE		.	.	.	

POTENTIAL HAPS IN PROCESS STREAMS

HAP DESCRIPTION	HAP CAS NUMBER	FRACTION IN INPUT STREAM BY WEIGHT	FRACTION IN PRODUCT STREAM BY WEIGHT	FRACTION IN WASTE STREAM BY WEIGHT
Acetaldehyde	- -	.E-	.E-	.E-
Formaldehyde	- -	.E-	.E-	.E-
Methanol	- -	.E-	.E-	.E-
Propionaldehyde	- -	.E-	.E-	.E-

S

BUILDING ID CODE

\c /al-

LLED OR LAST MODIFIED

B	F		L	S			
B	F		L	S			

FRACTION IN RECYCLE STREAM BY WEIGHT

	.		E	-		
	.		E	-		
	.		E	-		
	.		E	-		

P-2007.0107 BENNETT LUMBER PRODUCTS - INCOMPLETENESS RESPONSE, REC'D 10/4/2007

Acronyms

MM	million
M	thousamd
MMbf/hr	million board feet (lumber scale) per hour
MMBtu/hr	Million Btu (B. Thermal Unit) per hour
MM lb steam	million lbs steam
BDT	bone dry tons
GT	green tons
hr	hour
yr	year
ST	used as an abbreviation for Storage source emissions, where necessary
TR	used as an abbreviation for Transfer source emissions, where necessary
HAP	Hazardous air pollutant
NAAQS	National Ambient Air Quality Standard
IDEQ	Idaho Department of Environmental Quality

TRANSFER/CONVEYOR CALCULATIONS

CONVEYORS

Name	Code	Wind Spd (MPH)	Moisture (%)	Max Transf Rate (BDT/hr)	Transfer Rate (BDT/hr)	Throughput (BDT tons/yr)	Emission Factor * (lbs/ton)	Max PM (lb/hr)	Avg. PM (lb/hr)	PM (ton/yr)	Max PM 10 (lb/hr)	Avg. PM 10 (lb/hr)	PM 10 (ton/yr)	Operating hours
Hog Infeed Conveyor	TR 1	9	43	7.63	6.36	38,132	0.05910	0.45	0.38	1.13	0.16	0.13	0.39	6,000
Bark Conveyor System	TR 2	9	43	4.60	3.83	1,733	0.05910	0.27	0.23	0.05	0.10	0.08	0.02	452
Hog Outfeed Conveyor	TR 3	9	43	7.63	6.36	38,132	0.05910	0.45	0.38	1.13	0.16	0.13	0.39	6,000
Bark Screen Overs Conveyor	TR 4	9	43	0.69	0.58	3,457	0.05910	0.04	0.03	0.10	0.01	0.01	0.04	6,000
Deck Trash Conveyor	TR 5	9	50	0.36	0.30	1,800	0.04785	0.02	0.01	0.04	0.01	0.01	0.02	6,000
Truck Bark Bin Conveyor	TR 6	9	43	6.94	5.78	34,675	0.05910	0.41	0.34	1.02	0.14	0.12	0.36	6,000
Boiler Bark Conveyor	TR 7	9	43	5.54	4.61	27,675	0.05910	0.33	0.27	0.82	0.11	0.10	0.29	6,000
Sawdust Conveyor	TR 8	9	47	4.65	3.87	23,240	0.05218	0.24	0.20	0.61	0.08	0.07	0.21	6,000
Chips Overs/fines Conveyor	TR 9	9	47	0.65	0.54	3,262	0.05218	0.03	0.03	0.09	0.01	0.01	0.03	6,000
Main Fuel Conveyor	TR 10	9	43	4.20	3.50	29,981	0.05910	0.25	0.21	0.89	0.09	0.07	0.31	8,568
Aux Fuel Conveyor	TR 11	9	43	2.40	2.00	6,321	0.05910	0.05	0.04	0.19	0.02	0.02	0.07	8,568
Fly ash Transport	TR 12	9	5	0.05	0.04	351	1.20196	0.06	0.05	0.21	0.02	0.02	0.07	8,568
							Total	2.6	2.2	6.3	0.9	0.8	2.2	

* Use AP 42 13.2.4 Aggregate Handling

E=k(.0032)*((u/5)**1.3)/((M/2)**1.4)

particulate matter multiplier (k) = .35 for pm 10 — k=1 for PM

average wind speed = 9 mph

at 50% moisture content	PM-10 EF =	0.0167 lbs/ton		PM EF =	0.0479 lbs/ton
at 47% moisture content	PM-10 EF =	0.0183 lbs/ton		PM EF =	0.0522 lbs/ton
at 43% moisture content	PM-10 EF =	0.0207 lbs/ton		PM EF =	0.0591 lbs/ton
at 11.1% moisture content	PM-10 EF =	0.1377 lbs/ton	planer shavings	PM EF =	0.3935 lbs/ton
at 5% moisture content	PM-10 EF =	0.4207 lbs/ton		PM EF =	1.2020 lbs/ton

Bin to Truck Transfers

Name	Code	PM Em. F (lb/ton)	PM-10 Em. F (lb/ton)	Throughput (BDT)	Transfer Rate (BDT/hr)	Control Efficiency	PM Emissions (tons/yr)	PM-10 Emissions (tons/yr)	Moisture Content	Operating hours	PM-10 Emissions (lbs/hr)	Modeled AS
Bark Bin to truck	TR 13	0.0591	0.0207	**7,000**	0.8	75%	0.05	0.02	47%	8,568	0.00	BKSDFUGS
Sawdust Bin to truck	TR 14	0.0591	0.0207	**21,240**	2.5	50%	0.31	0.11	47%	8,568	0.03	BKSDFUGS
Chip bins to truck	TR 15	0.0591	0.0207	**65,600**	7.7	75%	0.48	0.17	47%	8,568	0.04	CHSHFUGS
Shavings to Truck	TR 16	0.3935	0.1377	**23,500**	2.7	75%	1.16	0.40	11%	8,568	0.09	CHSHFUGS
Fuel Reload to Truck	TR 17	0.0591	0.0207	**4,581**	0.5		0.14	0.05	47%	8,568	0.01	BLRFUGS
					Total		2.14	0.75			0.17	

Note: TR 13 - 16 all have long sidewalls, allowing 75% control for sawdust, 90% controls for larger materials

Note: TR 12 is ash moving - very small amount - negligible emissions.

Storage Calculations

PILES

Name	Code	Width Ft.	Length Ft.	Height Ft.	Area Acres	PM lb/acre/day Factor *	PM 10 lb/acre/day Factor *	PM lbs/hr	PM tons/yr	120% average hrly PM 10 lbs/hr	PM 10 tons/yr	Assumptions	Modeled as
Boiler Fuel Storage	ST 4	50	75	20	0.09	9.35	4.68	0.0	0.15	0.020	0.07	1/2 active, 1/2 inactive	BLRFUGS
Log Yard Waste # 1	ST 7	20	40	10	0.02	9:35	4.68	0.0	0.03	0.004	0.02	1/2 active, 1/2 inactive	YARDFUGS
Rock Storage	ST 8	75	140	10	0.24	0.00	0.00	0.0	0.00	0.000	0.00	inactive	YARDFUGS
Log Yard Waste #2	ST 9	30	100	5	0.07	9.35	4.68	0.0	0.12	0.016	0.06	1/2 active, 1/2 inactive	YARDFUGS
Ash Storage	ST 10	40	10	5	0.01	3.90	5.2	0.036	0.01	0.002	0.01	inactive, all PM 10 fines	BLRFUGS
						Total			0.30		0.16		

BINS

Name	Code	Thput (tons/yr)	PM E. Fact (lb/ton)	PM-10 E. Fact (lb/ton)		Control Efficiency	Max Trans (tons/hr)	Avg Trans (tons/hr)	Operat. Hrs/yr	120% PM max (lbs/hr)	PM (tons/yr)	120% PM-10 max (lbs/hr)	PM-10 (tons/yr)	Modeled as
Truck Bark Bin	ST 1	7,000	1.0	0.58	BDT	95%	50	25	8,568	0.0	0.175	0.028	0.102	BKSDFUGS
Sawdust Bin	ST 2	21,240	1.0	0.58	BDT	95%	50	25	8,568	0.1	0.531	0.086	0.308	BKSDFUGS
Truck Chip Bin	ST 3	65,600	1.0	0.58	BDT	95%	75	50	8,568	0.5	1.640	0.266	0.951	CHSHFUGS
Aux Fuel Bin	ST 5	6,321	1.0	0.58	BDT	95%	2.4	2	8,568	0.0	0.158	0.026	0.092	BLRFUGS
Shavings Truck Bin	ST 6	23,500	1.0	0.58	BDT	95%	50	25	8,568	0.1	0.588	0.095	0.341	CHSHFUGS
									Total	0.8	3.1	0.5	1.8	

Note: All storage bins are enclosed, with small vent openings for air, (assume 95% effic).

Solvent Calculations

Name	Code	Throughput (gallons)	E. Factor (lb/1000 gal)		Total HAPs (tons/yr)	VOC's (tons/yr)		
Diesel Tank 1	S 1	175,000	0.02		0.00E+00	1.8E-03	No Haps	139413
Diesel Tank 2	S 2	175,000	0.02		0.00E+00	1.8E-03	No Haps	139412
Gasoline Tank	S 3	30,000	8.2	*	7.71E-02	1.2E-01		23400
#1 Diesel Tank	S 4	900	0.02		5.76E-06	9.0E-06		600
Stove Oil Tank	S 5	11,000	0.02		7.04E-05	1.1E-04		9677
Parts Washer	S 6	tons/yr/unit :	0.330	*	1.72E-04	1.7E-02	assume 95% efficiency-closed lid, 1 unit.	tons/yr/unit :
Parts Washer	S 7	tons/yr/unit :	0.330	*	1.72E-04	1.7E-02	assume 95% efficiency-closed lid, 1 unit.	tons/yr/unit :
Parts Washer	S 8	tons/yr/unit :	0.330	*	1.72E-04	1.7E-02	assume 95% efficiency-closed lid, 1 unit.	tons/yr/unit :
Aviation Gas	S 9	2,500	0.03		0.00E+00	3.8E-05	No Haps	1800
Used Oil Tank	S 10	4,500	Insig Activity		Insig Activity	0.0E+00	insignificant activity	3360
				Total	0.08	0.18		

*Assume HAPS emissions are directly proportional to % by weight.

Boiler Potential Emissions - Bennett Lumber

47,837 G Tons/yr = 444,728 mmBTU/yr

annual steam production limit average **46500** **lbs/hr**

assuming 8760 hrs operation/yr 407,340,000 lbs stm/yr
0.67 efficiency
1050 BTU/lb steam
6.38E+11 BTU/yr
6.38E+05 MMBtu/yr
36302 BDT/yr
63687 GT/yr

	Pollutant	Emission Factor		Oper.	Units	Emissions (tons/yr)	Max lbs/hr	
*	Particulate	27.27	lb/hr	8,760	hrs	119.45	27.27	386822
	PM 10	27.00	lb/hr	8,760	hrs	118.26	27.00	386822
**	SO 2	0.025	lbs/10^6 Btu	638.369	mmBTU/yr	7.98	2.41	386822
**	CO	0.60	lbs/10^6 Btu	638.369	mmBTU/yr	191.51	57.92	386822
**	NOx	0.22	lbs/10^6 Btu	638.369	mmBTU/yr	70.22	21.24	386822
***	VOC	0.038	lbs/10^6 Btu	638.369	mmBTU/yr	12.13	3.67	386822

* Assume PM10/PM ratio = 0.99 (AP-42, Table 1.6.1, with scrubber)
** Table 1.6-2, Bark and wet wood fired boiler
*** Table 1.6-3

Max hrly emissions include 10% buffer for pollutants with lbs/MMBtu emission rate

Max short term steaming rate
56000 lbs/hr
0.67 efficiency
1050 BTU/lb steam
8.78E+07 BTU/hr
8.78E+01 MMBtu/hr
4.99 BDT/hr
8.76 GT/hr

BTU and moisture content calculations

0.4713 47,837 gt in 2003 (no shavings)

avg of 3 hog fuels: 4648.3 Btu/gr lb

2003			
5368	BTU/gr lb ->White fir hog fuel 2003@	0.465	mc
4647	BTU/gr lb ->Red Fir hog fuel 2003 @	0.46	mc
3930	BTU/gr lb ->Cedar Fir hog fuel 2003 @	0.489	mc
4648.3	average BTU/gr lb	0.471333	
8792.6	average BTU / BD lb		
17585120	average BTU / BDT		
17.59	average MMBtu/ BDT		

Modeling results - Boiler max impact / lb/hr

1 hr	12.81748
3 hr	8.00345
8 hr	3.70844
24 hr	1.68338
annual	0.18983

NOx	annual	4.03
SO2	3 hr	19.32
	24 hr	4.06
	annual	0.46
CO	1 hr	742.42
	8 hr	214.80

Total Potential Emissions - Bennett Lumber

Non-fugitive Emissions

Source	Particulate (tons/yr)	PM 10	VOC's (tons/yr)	SO 2 (tons/yr)	CO (tons/yr)	NOx (tons/yr)	Total EPA HAPs (tons/yr)	Acetald (tons/yr)	Formaldehyde (tons/yr)	Methanol (tons/yr)	Propionaldehyde (tons/yr)
Dry Kilns	3.33	3.33	93.34	NA	NA	NA	16.00	3.800	0.267	8.134	0.067
Process (excl kilns)	9.90	13.23	0.00	NA	NA	NA	0.00	0.000	0.000	0.000	0.000
Boiler	119.45	118.26	12.13	7.98	191.51	70.22	5.09	0.080	0.203	0.265	0.019
Subtotal	**132.7**	**134.8**	**105.5**	**8.0**	**191.5**	**70.2**	**21.1**	**3.881**	**0.470**	**8.399**	

Fugitive Emissions

Source	Particulate (tons/yr)	PM 10	VOC's (tons/yr)	SO 2 (tons/yr)	CO (tons/yr)	NOx (tons/yr)	Total EPA HAPs (tons/yr)	Acetald (tons/yr)	Formaldehyde (tons/yr)	Methanol (tons/yr)
Fugitive - Roads	1.00	3.60	NA	NA	NA	NA	NA	NA	NA	NA
Transfer - Conveyors	6.27	2.19	NA	NA	NA	NA	NA	NA	NA	NA
Transfer - Trucks	2.14	0.75	NA	NA	NA	NA	NA	NA	NA	NA
Storage - Piles	0.30	0.16	NA	NA	NA	NA	NA	NA	NA	NA
Storage - Bins	3.09	1.79	NA	NA	NA	NA	NA	NA	NA	NA
Solvents	NA	NA	0.18	NA	NA	NA	0.08	NA	NA	NA
Subtotal	**12.8**	**8.5**	**0.2**	**0.0**	**0.0**	**0.0**	**0.1**	**0.0**	**0.0**	**0.0**

NTWIDE TOTAL	**145.5**	**143.3**	**105.6**	**8.0**	**191.5**	**70.2**	**21.2**	**3.9**	**0.5**	**8.4**

IDEQ Fee emissions (total) 539.84

IDEQ Fee emissions (increase as a result of proposed action) **173.99**
PTE here - PTE from 12/05 PTC application

$7500 for > 100 tons/yr
$5000 for <100 tons/yr

HAP permit limit of 24 tons/yr cumulative and 9 tons per year individually proposed to avoid HAP major source status if HAP Efs change

Boiler Haps Emissions

Previously permitted 444,728 MMBtu/yr — Hr/year: 8,760

585 586 — Proposed mm BTU/year 638,369

Proposed increase in MMBtu/yr 193,641

Proposed Increase in MMBtu/hr 22.11

annual 1lb/hr impact 0.18983

24 hr 1lb/hr impact 1.68338

acetaldehyde and formaldehyde emissions were modeled separately because each had emissions from kilns as well as boiler

Pollutant	Emission Factor * (lbs/unit)	Throughput	Units	IDAPA 585 EL (lb/hr)	IDAPA 586 EL (lb/hr)	Max Emiss Increase (lb/hr)	Avg Emiss Increase (lb/hr)	Increase in HAP emissions: Total HAP Emissions (tons/yr)	Increase in HAP emissions: EPA HAP Emissions (tons/yr)	HAP emissions after Proposed Action: Total HAP Emissions (tons/yr)	HAP emissions after Proposed Action: EPA HAP Emissions (tons/yr)	585 emitted above EL?	586 emitted above EL?	585 AAC ug/m3 24-hr ave	585 AAC ug/m3 annual ave	ISCST3 model max imp ug/m3	Exceed AAC(C)?	% of AAC(C)?
Acenaphthene	9.1E-07	193,641	lbs/10^6 Btu	NA	NA	2.41E-05	2.01E-05	0.000		0.000		no	no					
Acenaphthylene	5.0E-06	193,641	lbs/10^6 Btu	NA	NA	1.33E-04	1.11E-04	0.000		0.002		no	no					
Acetaldehyde	8.3E-04	193,641	lbs/10^6 Btu	NA	3.00E-03	2.20E-02	1.83E-02	0.080	0.08036	0.265	0.26492	no	yes		0.45	3.48E-03	no	0.8%
Acetone	1.9E-04	193,641	lbs/10^6 Btu	NA	NA	5.04E-03	4.20E-03	0.018		0.061		no	no					
Acetophenone	3.2E-09	193,641	lbs/10^6 Btu	NA	NA	8.49E-08	7.07E-08	0.000	0.00000	0.000	0.00000	no	no					
Acrolein	4.0E-03	193,641	lbs/10^6 Btu	1.70E-02	NA	1.06E-01	8.84E-02	0.387	0.38728	1.277	1.27674	yes	no	12.5		1.49E-01	no	1.2%
Anthracene	3.0E-06	193,641	lbs/10^6 Btu	NA	NA	7.96E-05	6.63E-05	0.000		0.001		no	no					
Benzaldehyde	8.5E-07	193,641	lbs/10^6 Btu	NA	NA	2.25E-05	1.88E-05	0.000		0.000		no	no					
Benzene #	3.3E-03	193,641	lbs/10^6 Btu	NA	8.40E-04	8.75E-02	7.29E-02	0.320	0.31951	1.053	1.05331	no	yes		0.12	1.38E-02	no	11.5%
Benzo anthracene	6.5E-08	193,641	lbs/10^6 Btu	NA	NA	1.72E-06	1.44E-06	0.000		0.000		no	no					
Benzo a pyrene	2.6E-06	193,641	lbs/10^6 Btu	NA	2.60E-06	6.90E-05	5.75E-05	0.000		0.001		no	yes		0.0003	1.09E-05	no	3.6%
Benzo b fluoranthene	1.7E-07	193,641	lbs/10^6 Btu	NA	NA	4.51E-06	3.76E-06	0.000		0.000		no	no					
Benzo e pyrene	2.6E-09	193,641	lbs/10^6 Btu	NA	NA	6.90E-08	5.75E-08	0.000		0.000		no	no					
Benzo g,h,i pyrlene	9.3E-08	193,641	lbs/10^6 Btu	NA	NA	2.47E-06	2.06E-06	0.000		0.000		no	no					
Benzo j,k fluoranthene	1.6E-07	193,641	lbs/10^6 Btu	NA	NA	4.24E-06	3.54E-06	0.000		0.000		no	no					
Benzo k fluoranthene	3.6E-08	193,641	lbs/10^6 Btu	NA	NA	9.55E-07	7.96E-07	0.000		0.000		no	no					
Benzoic acid	4.7E-08	193,641	lbs/10^6 Btu	NA	NA	1.25E-06	1.04E-06	0.000		0.000		no	no					
Bis phthalate	4.7E-08	193,641	lbs/10^6 Btu	NA	2.80E-02	1.25E-06	1.04E-06	0.000	0.00000	0.000	0.00002	no	no					
Bromomethane	1.5E-05	193,641	lbs/10^6 Btu	NA	NA	3.98E-04	3.32E-04	0.001		0.005		no	no					
2-Butanone (MEK)	5.4E-06	193,641	lbs/10^6 Btu	39.3	NA	1.43E-04	1.19E-04	0.001		0.002		no	no					
Carbazole	1.8E-06	193,641	lbs/10^6 Btu	NA	NA	4.77E-05	3.98E-05	0.000		0.001		no	no					
Carbon Tetrachloride	4.5E-05	193,641	lbs/10^6 Btu	NA	4.40E-04	1.19E-03	9.95E-04	0.004	0.00436	0.014	0.01436	no	yes		0.067	1.89E-04	no	0.3%
Chlorine	7.9E-04	193,641	lbs/10^6 Btu	0.2	NA	2.10E-02	1.75E-02	0.076	0.07649	0.252	0.25216	no	no					
Chlorobenzene	3.3E-05	193,641	lbs/10^6 Btu	23.3	NA	8.75E-04	7.29E-04	0.003	0.00320	0.011	0.01053	no	no					
Chloroform	2.8E-05	193,641	lbs/10^6 Btu	NA	2.80E-04	7.43E-04	6.19E-04	0.003	0.00271	0.009	0.00894	no	yes		0.043	1.17E-04	no	0.3%
Chloromethane	2.3E-05	193,641	lbs/10^6 Btu	NA	NA	6.10E-04	5.08E-04	0.002		0.007		no	no					
2-Chloronaphthalene	2.4E-09	193,641	lbs/10^6 Btu	NA	NA	6.37E-08	5.31E-08	0.000		0.000		no	no					
2-Chlorophenol	2.4E-08	193,641	lbs/10^6 Btu	0.033	NA	6.37E-07	5.31E-07	0.000		0.000		no	no					
Chrysene	3.8E-08	193,641	lbs/10^6 Btu	NA	NA	1.01E-06	8.40E-07	0.000		0.000		no	no					
Crotonaldehyde	9.9E-06	193,641	lbs/10^6 Btu	0.38	NA	2.63E-04	2.19E-04	0.001		0.003		no	no					
Decachlorobiphenyl	2.7E-10	193,641	lbs/10^6 Btu	NA	NA	7.16E-09	5.97E-09	0.000		0.000		no	no					
Dibinenzo a,h anthracene	9.1E-09	193,641	lbs/10^6 Btu	NA	NA	2.41E-07	2.01E-07	0.000		0.000		no	no					
1,2-Dibromoethane	5.5E-05	193,641	lbs/10^6 Btu	NA	NA	1.46E-03	1.22E-03	0.005		0.018		no	no					
Dichlorobiphenyl	7.4E-10	193,641	lbs/10^6 Btu	NA	NA	1.96E-08	1.64E-08	0.000		0.000		no	no					
1,2 Dichloroethane	2.9E-05	193,641	lbs/10^6 Btu	NA	2.50E-04	7.69E-04	6.41E-04	0.003		0.009		no	yes		0.038	1.22E-04	no	0.3%
Dichloromethane	2.9E-04	193,641	lbs/10^6 Btu	NA	1.60E-03	7.69E-03	6.41E-03	0.028		0.093		no	yes		0.24	1.22E-03	no	0.5%
1,2- Dichloropropane	3.3E-05	193,641	lbs/10^6 Btu	23.133	NA	8.75E-04	7.29E-04	0.003		0.011		no	no					
2,4 -Dinitrophenol	1.8E-07	193,641	lbs/10^6 Btu	NA	NA	4.77E-06	3.98E-06	0.000	0.00002	0.000	0.00006	no	no					
Ethylbezene	3.1E-05	193,641	lbs/10^6 Btu	29	NA	8.22E-04	6.85E-04	0.003	0.00300	0.010	0.00989	no	no					
Fluoranthene	1.6E-06	193,641	lbs/10^6 Btu	NA	NA	4.24E-05	3.54E-05	0.000		0.001		no	no					
Fluorene	3.4E-06	193,641	lbs/10^6 Btu	1.33E-01	NA	9.02E-05	7.52E-05	0.000		0.001		no	no					
Formaldehyde #	2.1E-03	193,641	lbs/10^6 Btu	NA	5.10E-04	5.57E-02	4.64E-02	0.203	0.20332	0.670	0.67029	no	yes		0.077	8.81E-03	no	11.4%
Heptachlorobiphenyl	6.6E-11	193,641	lbs/10^6 Btu	NA	NA	1.75E-09	1.46E-09	0.000		0.000		no	no					
Hexachlorobiphenyl	5.5E-10	193,641	lbs/10^6 Btu	NA	NA	1.46E-08	1.22E-08	0.000		0.000		no	no					
Haxanaol	7.0E-06	193,641	lbs/10^6 Btu	NA	NA	1.86E-04	1.55E-04	0.001		0.002		no	no					
Heptachlorodibenzeno p dioxins	2.0E-09	193,641	lbs/10^6 Btu	NA	NA	5.31E-08	4.42E-08	0.000		0.000		no	no					
Heptachlorodibenzeno p furans	2.4E-10	193,641	lbs/10^6 Btu	NA	NA	6.37E-09	5.31E-09	0.000		0.000		no	no					
Hexachlorodibenzeno p dioxins	1.6E-06	193,641	lbs/10^6 Btu	NA	NA	4.24E-05	3.54E-05	0.000		0.001		no	no					
Hexachlorodibenzeno p furans	2.8E-10	193,641	lbs/10^6 Btu	NA	NA	7.43E-09	6.19E-09	0.000		0.000		no	no					
Hydrogen Chloride #	6.7E-04	193,641	lbs/10^6 Btu	0.05	NA	1.78E-02	1.48E-02	0.065	0.06487	0.214	0.21385	no	no	375		2.49E-02	no	0.0%
Indeno 123cd pyrene	8.7E-08	193,641	lbs/10^6 Btu	NA	NA	2.31E-06	1.92E-06	0.000		0.000		no	no					
Isobutyraldehyde	1.2E-05	193,641	lbs/10^6 Btu	NA	NA	3.18E-04	2.65E-04	0.001		0.004		no	no					
Methane	1.2E-02	193,641	lbs/10^6 Btu	NA	NA	3.18E-01	2.65E-01	1.162		3.830		no	no					
2-Methylnapthalene	1.6E-07	193,641	lbs/10^6 Btu	NA	NA	4.24E-06	3.54E-06	0.000		0.000		no	no					
Monochlorobuphenyl	2.2E-10	193,641	lbs/10^6 Btu	NA	NA	5.84E-09	4.86E-09	0.000		0.000		no	no					
Napthalene	9.7E-05	193,641	lbs/10^6 Btu	3.33	NA	2.57E-03	2.14E-03	0.009	0.00939	0.031	0.03096	no	no					
2-Nitrophenol	2.4E-07	193,641	lbs/10^6 Btu	NA	NA	6.37E-06	5.31E-06	0.000		0.000		no	no					
4-Nitrophenol	2.4E-07	193,641	lbs/10^6 Btu	NA	NA	6.37E-06	5.31E-06	0.000	0.00002	0.000	0.00008	no	no					
Octachlorodibenzeno p dioxins	6.6E-08	193,641	lbs/10^6 Btu	NA	NA	1.75E-06	1.46E-06	0.000		0.000		no	no					
Octachlorodibenzeno p furans	8.8E-11	193,641	lbs/10^6 Btu	NA	NA	2.33E-09	1.95E-09	0.000		0.000		no	no					
Pentachlorodibenzeno p dioxins	1.5E-09	193,641	lbs/10^6 Btu	NA	NA	3.98E-08	3.32E-08	0.000		0.000		no	no					
Pentachlorodibenzeno p furans	4.2E-10	193,641	lbs/10^6 Btu	NA	NA	1.11E-08	9.28E-09	0.000		0.000		no	no					
Pentachlorobiphenyl	1.2E-09	193,641	lbs/10^6 Btu	NA	NA	3.18E-08	2.65E-08	0.000		0.000		no	no					
Pentachlorobiphenol	5.1E-08	193,641	lbs/10^6 Btu	NA	NA	1.35E-06	1.13E-06	0.000	0.00000	0.000	0.00002	no	no					
Perylene	5.2E-10	193,641	lbs/10^6 Btu	NA	NA	1.38E-08	1.15E-08	0.000		0.000		no	no					
Napthalene	3.4E-07	193,641	lbs/10^6 Btu	NA	NA	9.02E-06	7.52E-06	0.000		0.000		no	no					
Phenanthrene	7.0E-06	193,641	lbs/10^6 Btu	NA	NA	1.86E-04	1.55E-04	0.001		0.002		no	no					
Phenol	5.1E-05	193,641	lbs/10^6 Btu	1.27E+00	NA	1.35E-03	1.13E-03	0.005	0.00494	0.016	0.01628	no	no					
Propanol	3.2E-06	193,641	lbs/10^6 Btu	NA	NA	8.49E-05	7.07E-05	0.000		0.001		no	no					
Propionaldehyde	6.1E-05	193,641	lbs/10^6 Btu	0.0287	NA	1.62E-03	1.35E-03	0.006	0.00591	0.019	0.01947	no	no					
Pyrene	3.7E-06	193,641	lbs/10^6 Btu	NA	NA	9.81E-05	8.18E-05	0.000		0.001		no	no					
Styrene	1.9E-03	193,641	lbs/10^6 Btu	6.67	NA	5.04E-02	4.20E-02	0.184	0.18396	0.606	0.60645	no	no					
2,3,7,8 Tetrachlorodibenzo p dioxins	8.6E-12	193,641	lbs/10^6 Btu	NA	1.50E-10	2.28E-10	1.90E-10	0.000	0.00000	0.000	0.00000	no	yes		2.20E-08	3.61E-11	no	0.2%
Tetrachlorodibenzo p dioxins	4.7E-10	193,641	lbs/10^6 Btu	NA	NA	1.25E-08	1.04E-08	0.000		0.000		no	no					
2,3,7,8 Tetrachlorodibenzo p furans	9.0E-11	193,641	lbs/10^6 Btu	NA	NA	2.39E-09	1.99E-09	0.000		0.000		no	no					
Tetrachlorodibenzo p furans	7.5E-10	193,641	lbs/10^6 Btu	NA	NA	1.99E-08	1.66E-08	0.000		0.000		no	no					
Tetrachlorobiphenyl	2.5E-09	193,641	lbs/10^6 Btu	NA	NA	6.63E-08	5.53E-08	0.000		0.000		no	no					
Tetrachloroethane	3.8E-05	193,641	lbs/10^6 Btu	NA	1.10E-05	1.01E-03	8.40E-04	0.004		0.012		no	yes		0.017	1.59E-04	no	0.9%
o-Tolualdehyde	7.2E-06	193,641	lbs/10^6 Btu	NA	NA	1.91E-04	1.59E-04	0.001		0.002		no	no					
p-Tolualdehyde	1.1E-05	193,641	lbs/10^6 Btu	NA	NA	2.92E-04	2.43E-04	0.001		0.004		no	no					
Toluene	9.2E-04	193,641	lbs/10^6 Btu	25	NA	2.44E-02	2.03E-02	0.089	0.08907	0.294	0.29365	no	no					
Trichlorobiphenyl	2.6E-09	193,641	lbs/10^6 Btu	NA	NA	6.90E-08	5.75E-08	0.000		0.000		no	no					
1,1,1 Trichlorethane	3.1E-05	193,641	lbs/10^6 Btu	NA	NA	8.22E-04	6.85E-04	0.003		0.010		no	no					
Trichloroethane	3.0E-05	193,641	lbs/10^6 Btu	NA	NA	7.96E-04	6.63E-04	0.003		0.010		no	no					
Trichlorfluoromethane	4.1E-05	193,641	lbs/10^6 Btu	NA	NA	1.09E-03	9.06E-04	0.004		0.013		no	no					
2,4,6 Trichlorophenol	2.2E-08	193,641	lbs/10^6 Btu	NA	NA	5.84E-07	4.86E-07	0.000	0.00000	0.000	0.00001	no	no					
Vinyl Chloride	1.8E-05	193,641	lbs/10^6 Btu	NA	9.40E-04	4.77E-04	3.98E-04	0.002	0.00174	0.006	0.00575	no	no					
o-Xylene	2.5E-05	193,641	lbs/10^6 Btu	29	NA	6.63E-04	5.53E-04	0.002	0.00242	0.008	0.00798	no	no					
Antimony	7.9E-06	193,641	lbs/10^6 Btu	0.033	NA	2.10E-04	1.75E-04	0.001	0.00076	0.003	0.00252	no	no					
Arsenic #	1.0E-06	193,641	lbs/10^6 Btu	NA	1.50E-06	2.77E-05	2.31E-05	0.000	0.00010	0.000	0.00033	no	yes		2.30E-04	4.38E-06	no	1.9%
Beryllium	1.1E-06	193,641	lbs/10^6 Btu	NA	2.80E-05	2.92E-05	2.43E-05	0.000	0.00011	0.000	0.00035	no	no					
Cadmium	4.1E-06	193,641	lbs/10^6 Btu	NA	3.70E-06	1.09E-04	9.06E-05	0.000	0.00040	0.001	0.00131	no	yes		5.60E-04	1.72E-05	no	3.1%
Chromium, total #	5.9E-07	193,641	lbs/10^6 Btu	0.033	NA	1.57E-05	1.30E-05	0.000	0.00006	0.000	0.00019	no	no					
Cobalt #	1.9E-07	193,641	lbs/10^6 Btu	0.0033	NA	5.04E-06	4.20E-06	0.000	0.00002	0.000	0.00006	no	no					
Lead #	5.8E-06	193,641	lbs/10^6 Btu	NA	NA	1.54E-04	1.28E-04	0.001	0.00056	0.002	0.00185	no	no					
Manganese #	1.5E-04	193,641	lbs/10^6 Btu	NA	NA	3.98E-03	3.32E-03	0.015	0.01452	0.048	0.04788	no	no					
Mercury #	9.9E-07	193,641	lbs/10^6 Btu	0.007	NA	2.63E-05	2.20E-05	0.000	0.00010	0.000	0.00032	no	no					
Nickel	3.3E-05	193,641	lbs/10^6 Btu	NA	2.70E-05	8.75E-04	7.29E-04	0.003	0.00320	0.011	0.01053	no	yes		4.20E-03	1.38E-04	no	3.3%
Selenium #	3.0E-06	193,641	lbs/10^6 Btu	0.013	NA	7.96E-05	6.63E-05	0.000	0.00029	0.001	0.00096	no	no					
Methanol #	8.3E-04	193,641	lbs/10^6 Btu	0.013	NA	2.20E-02	1.83E-02	0.080	0.08036	0.265	0.26492							
All TAPs	0.02880 lbs/hr							0.764	0.637	2.708	1.463	9.193	5.087					
EPA Regulated HAPs	0.01594 lbs/hr			0.0149	# ODEQ Total HAP emissions (lbs/MMBtu)													

* From AP-42 Table 1.6-3 updated Sept 2003
except # From NCASI TB 858, as per ODEQ drykilnmemo 5/9/07

Scaling TB858 EFs as presented in ODEQ drykilnmemo 050907
Largest EF Acrolein 6.77 lbs/MMlb Steam
AP-42 EF for acrolein 0.004 lbs/MMBtu
Translation effectively assumes 6.77/0.004 MMBtu/MMlb steam = 1692.5 BTU/lb steam — 100 Btu/lb assumption in ODEQ drykilnmemo050907 divided by assumed 65% efficiency

Q/A check for Styrene ODEQ 3.22 lbs/MMlb steam / 1692.5 BTU/lb steam = 0.001903 lbs/MMBtu
AP-42 Styrene EF = 0.0019 lbs/MMBtu

Process Potential Emissions - Bennett Lumber

Process Name		PM Em. Factor	PM-10 Em. Factor	EF Units	Operating (hours)	Avg Throughput (hourly)	Units	Throughput (annual)	120% Units	PM Max hrly Emissions (lbs/hr)	PM Annual Emissions (tons/yr)	PM-10 Max hrly Emissions (lbs/hr)	PM-10 Annual Emissions (tons/yr)	Modeled As	
Sawmill	P 1	Inside a bldg.	Inside a bldg.	N/A	6,000	15.43	MBF Log S/hr	92,593	MBF LogS	0.000	0.00	0.000	0.00	x	All emissions through TR8, P8, and P6.
Small Log Debarker	P 2	insignificant	insignificant	N/A	6,000	57.70	GT/hr	346,223	GT/yr	0.000	0.00	0.000	0.00	x	Emissions are "insignificant"
Large Log Debarker	P 3	insignificant	insignificant	N/A	452	59.52	GT/hr	26,902	GT/yr	0.000	0.00	0.000	0.00	x	Emissions are "insignificant"
Bark Hog	P 4	0.024	0.011	lbs/BDT	6,000	2.63	BDT/hr	15,755	BDT/yr	0.076	0.19	0.035	0.09	P6	
Baghouse Cyclone	P 6	0.04	0.04	lbs/BDT	6,000	0.02	BDT/hr	132	BDT/yr	0.001	0.00	0.001	0.00	P6	
Sawdust Cyclone	P 7	2	1.6	lbs/BDT	6,000	0.33	BDT/hr	2,000	BDT/yr	0.800	2.00	0.640	1.60	P6	
Chip Screen	P 8	Inside a bldg.	Inside a bldg.	N/A	6,000	10.38	BDT/hr	62,290	BDT/yr	0.000	0.00	0.000	0.00	x	Inside a building.
New Planing Mill	P 9	Inside a bldg.	Inside a bldg.	N/A	5,500	28.65	MBF/hr	157,567	MBF LuSc	0.000	0.00	0.000	0.00	x	All emissions through P12.
Old Planing Mill	P 10	Inside a bldg.	Inside a bldg.	N/A	895	11.36	MBF/hr	10,164	MBF	0.000	0.00	0.000	0.00	x	All emissions through P11.
Shavings Cyclone	P 11	0.2	0.16	lbs/BDT	895	0.74	BDT/hr	664	BDT/yr	0.178	0.07	0.142	0.05	P 11	
Shavings Cyclone	P 12	0.2	0.16	lbs/BDT	5,500	6.17	BDT/hr	33,909	BDT/yr	1.480	3.39	1.184	2.71	P 12	
Shavings Cyclone	P 13	0.2	0.16	lbs/BDT	5,500	4.27	BDT/hr	23,500	BDT/yr	1.025	2.35	0.820	1.88	P 13	
Shavings Cyclone	P 14	0.2	0.16	lbs/BDT	5,500	2.01	BDT/hr	11,073	BDT/yr	0.483	1.11	0.387	0.89	P 14	
Dry Kiln #1	P 15	0.05	0.05	lb/1,000 BF	8,500	2.85	1,000 BF/hr	24,244	1,000 BF/yr	0.171	0.61	0.171	0.61	Kiln1NTS	
Dry Kiln #2	P 16	0.05	0.05	lb/1,000 BF	8,500	2.85	1,000 BF/hr	24,244	1,000 BF/yr	0.171	0.61	0.171	0.61	Kiln2NTS	
Dry Kiln #3	P 17	0.05	0.05	lb/1,000 BF	8,500	1.43	1,000 BF/hr	12,122	1,000 BF/yr	0.086	0.30	0.086	0.30	Kiln3NTS	
Dry Kiln #4	P 18	0.05	0.05	lb/1,000 BF	8,500	2.85	1,000 BF/hr	24,244	1,000 BF/yr	0.171	0.61	0.171	0.61	Kiln4NTS	
Dry Kiln #5	P 19	0.05	0.05	lb/1,000 BF	8,500	2.85	1,000 BF/hr	24,244	1,000 BF/yr	0.171	0.61	0.171	0.61	Kiln5NTS	
Dry Kiln #6	P 20	0.05	0.05	lb/1,000 BF	8,500	2.85	1,000 BF/hr	24,244	1,000 BF/yr	0.171	0.61	0.171	0.61	Kiln6NTS	3.33
Dry Kiln #7	P 25	0.05	0.05	lb/1,000 BF	8,500	2.85	1,000 BF/hr	24,244	1,000 BF/yr	0.171	0.61	0.171	0.61	Kiln7NTS	
Dry Kiln Total								**157,585**		**0.9**	**3.3**	**0.9**	**3.3**	x	
Target Box	P 21	0.1	0.05	lbs/BDT	6,000	3.54	BDT/hr	21,240	BDT/yr	0.8	1.5	0.788	1.5	P21	
Bark Disk Screen	P 22	insignificant	insignificant	N/A	6,000	6.36	BDT/hr	38,132	BDT/yr	0.000	0.00	0.000	0.00	x	Natural draft
Land Applic of ash ***	P 23	12.76	6.38	lb/acre	8760	3.00	acres	351	gr tons/yr	0.307	1.12	0.153	0.56	P23 (Area)	
Baghouse	P 24	included with P6	included with P6	lbs/BDT	4,160	0.03	gr lb/hr	132	BDT/yr					P24	

Dry Kilns EF is for max ODEQ PM10 EF for any species processed

*** Use k=.21 for PM 10, K = 1.0 for PM, 50% control for mosit cover soil **Total** 5.3 13.2

All other EFs from IDEQ EFs for the Wood Products Industry for target box, mill mix baghouse, or cyclones (sandersust w/BH for P6, shavings for P11-14)

VOC's Process Name		Em. Factor	EF Units	Operating (hours)	Avg Throughput (hourly)	Units	Throughput (annual)	Units	120% Max hrly Emissions (lbs/hr)	Emissions (tons/yr)	
Dry Kiln #1	P 15	1.4	lb/1,000 BF	8,500	2.85	1,000 BF/hr	24,244	1,000 BF/yr	4.792	16.97	'acfm = "drift"
Dry Kiln #2	P 16	1.4	lb/1,000 BF	8,500	2.85	1,000 BF/hr	24,244	1,000 BF/yr	4.792	16.97	'acfm = "drift"
Dry Kiln #3	P 17	1.4	lb/1,000 BF	8,500	1.43	1,000 BF/hr	12,122	1,000 BF/yr	2.396	8.49	'acfm = "drift"
Dry Kiln #4	P 18	1.4	lb/1,000 BF	8,500	2.85	1,000 BF/hr	24,244	1,000 BF/yr	4.792	16.97	'acfm = "drift"
Dry Kiln #5	P 19	1.4	lb/1,000 BF	8,500	2.85	1,000 BF/hr	24,244	1,000 BF/yr	4.792	16.97	'acfm = "drift"
Dry Kiln #6	P 20	1.4	lb/1,000 BF	8,500	2.85	1,000 BF/hr	24,244	1,000 BF/yr	4.792	16.97	'acfm = "drift"
Dry Kiln #7	P25	1.4	lb/1,000 BF	8,500	2.85	1,000 BF/hr	24,244	1,000 BF/yr	4.792	16.97	

Max ODEQ VOC emission factor for any species processed. Actual ODEQ factor 0.5 or less for white fir and doug fir, primary species processed at BLP **Total** 26.4 93.3

HAP emissions after the proposed action

Acetaldehyde Process Name	IDAPA 586 TAP	Em. Factor	EF Units	Operating (hours)	Avg Throughput (hourly)	Units	Throughput (annual)	Units	120% Max hr Emissions (lbs/hr)	Ave Hrly Emissions (lbs/hr)	Emissions (tons/yr)
Dry Kiln #1	P 15	5.70E-02	lb/1,000 BF	8,500	2.85	1,000 BF/hr	24,244	1,000 BF/yr	0.195	0.163	0.69
Dry Kiln #2	P 16	5.70E-02	lb/1,000 BF	8,500	2.85	1,000 BF/hr	24,244	1,000 BF/yr	0.195	0.163	0.69
Dry Kiln #3	P 17	5.70E-02	lb/1,000 BF	8,500	1.43	1,000 BF/hr	12,122	1,000 BF/yr	0.098	0.081	0.35
Dry Kiln #4	P 18	5.70E-02	lb/1,000 BF	8,500	2.85	1,000 BF/hr	24,244	1,000 BF/yr	0.195	0.163	0.69
Dry Kiln #5	P 19	5.70E-02	lb/1,000 BF	8,500	2.85	1,000 BF/hr	24,244	1,000 BF/yr	0.195	0.163	0.69
Dry Kiln #6	P 20	5.70E-02	lb/1,000 BF	8,500	2.85	1,000 BF/hr	24,244	1,000 BF/yr	0.195	0.163	0.69
Dry Kiln #7	P 26	5.70E-02	lb/1,000 BF	8,500	2.85	1,000 BF/hr	24,244	1,000 BF/yr	0.195	0.163	0.69
							157,585				
								Total	1.073	0.894	3.80

EF reference: worst case doug fir from ODEQ dry kiln memo 050907, higher than white fir measured at 0.0549 (Fritz, Uoft 2004) and 0.046 (Potlatch, StMaries measured by OSU 2005) rather than dry kiln memo extrapolation of Mikola 2007 measurement of hemlock not grown or processed in ID

Formaldehyde Process Name	IDAPA 586 TAP	Em. Factor	EF Units	Operating (hours)	Avg Throughput (hourly)	Units	Throughput (annual)	Units	120% Max hrly Emissions (lbs/hr)	Ave Hrly Emissions (lbs/hr)	Emissions (tons/yr)
Dry Kiln #1	P 15	4.00E-03	lb/1,000 BF	8,500	2.85	1,000 BF/hr	24,244	1,000 BF/yr	0.014	0.011	0.05
Dry Kiln #2	P 16	4.00E-03	lb/1,000 BF	8,500	2.85	1,000 BF/hr	24,244	1,000 BF/yr	0.014	0.011	0.05
Dry Kiln #3	P 17	4.00E-03	lb/1,000 BF	8,500	1.43	1,000 BF/hr	12,122	1,000 BF/yr	0.007	0.006	0.02
Dry Kiln #4	P 18	4.00E-03	lb/1,000 BF	8,500	2.85	1,000 BF/hr	24,244	1,000 BF/yr	0.014	0.011	0.05
Dry Kiln #5	P 19	4.00E-03	lb/1,000 BF	8,500	2.85	1,000 BF/hr	24,244	1,000 BF/yr	0.014	0.011	0.05
Dry Kiln #6	P 20	4.00E-03	lb/1,000 BF	8,500	2.85	1,000 BF/hr	24,244	1,000 BF/yr	0.014	0.011	0.05
Dry Kiln #7	P 26	4.00E-03	lb/1,000 BF	8,500	2.85	1,000 BF/hr	24,244	1,000 BF/yr	0.014	0.011	0.05
							157,585				
								Total	0.07530	0.063	0.27

EF reference: worst case (lodgepole) from ODEQ dry kiln memo 050907

Methanol Process Name	IDAPA 585 TAP	Em. Factor	EF Units	Operating (hours)	Avg Throughput (hourly)	Units	Throughput (annual)	Units	120% Max hrly Emissions (lbs/hr)	Emissions (tons/yr)
Dry Kiln #1	P 15	1.22E-01	lb/1,000 BF	8,500	2.85	1,000 BF/hr	24,244	1,000 BF/yr	0.418	1.48
Dry Kiln #2	P 16	1.22E-01	lb/1,000 BF	8,500	2.85	1,000 BF/hr	24,244	1,000 BF/yr	0.418	1.48
Dry Kiln #3	P 17	1.22E-01	lb/1,000 BF	8,500	1.43	1,000 BF/hr	12,122	1,000 BF/yr	0.209	0.74
Dry Kiln #4	P 18	1.22E-01	lb/1,000 BF	8,500	2.85	1,000 BF/hr	24,244	1,000 BF/yr	0.418	1.48
Dry Kiln #5	P 19	1.22E-01	lb/1,000 BF	8,500	2.85	1,000 BF/hr	24,244	1,000 BF/yr	0.418	1.48
Dry Kiln #6	P 20	1.22E-01	lb/1,000 BF	8,500	2.85	1,000 BF/hr	24,244	1,000 BF/yr	0.418	1.48
Dry Kiln #7	P 26	1.22E-01	lb/1,000 BF	8,500	2.85	1,000 BF/hr	24,244	1,000 BF/yr	0.418	1.48
							157,585			
								Total	2.297	8.1

EF reference: worst case (white fir) among species processed at BLP (all species always processed <200 degrees) from ODEQ dry kiln memo 050907

Propionaldehyde Process Name	IDAPA 585 TAP	Em. Factor	EF Units	Operating (hours)	Avg Throughput (hourly)	Units	Throughput (annual)	Units	120% Max hrly Emissions (lbs/hr)	Emissions (tons/yr)
Dry Kiln #1	P 15	1.00E-03	lb/1,000 BF	8,500	2.85	1,000 BF/hr	24,244	1,000 BF/yr	0.003	0.01
Dry Kiln #2	P 16	1.00E-03	lb/1,000 BF	8,500	2.85	1,000 BF/hr	24,244	1,000 BF/yr	0.003	0.01
Dry Kiln #3	P 17	1.00E-03	lb/1,000 BF	8,500	1.43	1,000 BF/hr	12,122	1,000 BF/yr	0.002	0.01
Dry Kiln #4	P 18	1.00E-03	lb/1,000 BF	8,500	2.85	1,000 BF/hr	24,244	1,000 BF/yr	0.003	0.01
Dry Kiln #5	P 19	1.00E-03	lb/1,000 BF	8,500	2.85	1,000 BF/hr	24,244	1,000 BF/yr	0.003	0.01
Dry Kiln #6	P 20	1.00E-03	lb/1,000 BF	8,500	2.85	1,000 BF/hr	24,244	1,000 BF/yr	0.003	0.01
Dry Kiln #7	P 26	1.00E-03	lb/1,000 BF	8,500	2.85	1,000 BF/hr	24,244	1,000 BF/yr	0.003	0.01
							157,585			
								Total	0.019	0.07

EF reference: worst case (all species except doug fir) from ODEQ dry kiln memo 050907

Total HAPs Process Name	IDAPA 585 TAP	Em. Factor	EF Units	Operating (hours)	Avg Throughput (hourly)	Units	Throughput (annual)	Units	120% Max hrly Emissions (lbs/hr)	Emissions (tons/yr)
Dry Kiln #1	P 15	2.40E-01	lb/1,000 BF	8,500	2.85	1,000 BF/hr	24,244	1,000 BF/yr	0.821	2.91
Dry Kiln #2	P 16	2.40E-01	lb/1,000 BF	8,500	2.85	1,000 BF/hr	24,244	1,000 BF/yr	0.821	2.91
Dry Kiln #3	P 17	2.40E-01	lb/1,000 BF	8,500	1.43	1,000 BF/hr	12,122	1,000 BF/yr	0.411	1.45
Dry Kiln #4	P 18	2.40E-01	lb/1,000 BF	8,500	2.85	1,000 BF/hr	24,244	1,000 BF/yr	0.821	2.91
Dry Kiln #5	P 19	2.40E-01	lb/1,000 BF	8,500	2.85	1,000 BF/hr	24,244	1,000 BF/yr	0.821	2.91
Dry Kiln #6	P 20	2.40E-01	lb/1,000 BF	8,500	2.85	1,000 BF/hr	24,244	1,000 BF/yr	0.821	2.91
Dry Kiln #7	P 26	2.40E-01	lb/1,000 BF	8,500	2.85	1,000 BF/hr	24,244	1,000 BF/yr	0.821	2.91
							157,585			
								Total	4.518	16.0

EF reference: worst case (white fir) among species processed at BLP (all species always processed <200 degrees) from ODEQ dry kiln memo 050907

Increase in HAP emissions as a result of proposed action

Acetaldehyde Process Name	IDAPA 586 TAP	Em. Factor	EF Units	Operating (hours)	Avg Throughput (hourly)	Units	Throughput (annual)	Units	120% Max hrly Emissions (lbs/hr)	Ave Hrly Emissions (lbs/hr)	Emissions (tons/yr)
Dry Kiln #1	P 15	7.80E-03	lb/1,000 BF	8,500	2.85	1,000 BF/hr	9,290	1,000 BF/yr	0.010	0.009	0.03623
Dry Kiln #2	P 16	7.80E-03	lb/1,000 BF	8,500	2.85	1,000 BF/hr	9,290	1,000 BF/yr	0.010	0.009	0.03623
Dry Kiln #3	P 17	7.80E-03	lb/1,000 BF	8,500	1.43	1,000 BF/hr	4,645	1,000 BF/yr	0.005	0.004	0.01812
Dry Kiln #4	P 18	7.80E-03	lb/1,000 BF	8,500	2.85	1,000 BF/hr	9,290	1,000 BF/yr	0.010	0.009	0.03623
Dry Kiln #5	P 19	7.80E-03	lb/1,000 BF	8,500	2.85	1,000 BF/hr	9,290	1,000 BF/yr	0.010	0.009	0.03623
Dry Kiln #6	P 20	7.80E-03	lb/1,000 BF	8,500	2.85	1,000 BF/hr	9,290	1,000 BF/yr	0.010	0.009	0.03623
Dry Kiln #7	P 26	7.80E-03	lb/1,000 BF	8,500	2.85	1,000 BF/hr	9,290	1,000 BF/yr	0.010	0.009	0.03623
							60,384				
								Total	0.056	0.047	0.20
								IDAPA EL		0.003	

EF reference: worst case doug fir from ODEQ dry kiln memo 050907, higher than white fir measured at 0.0549 (Fritz, Uoft 2004) and 0.046 (Potlatch, StMaries measured by OSU 2005) rather than dry kiln memo extrapolation of Mikola 2007 measurement of hemlock not grown or processed in ID

Formaldehyde Process Name	IDAPA 586 TAP	Em. Factor	EF Units	Operating (hours)	Avg Throughput (hourly)	Units	Throughput (annual)	Units	120% Max hrly Emissions (lbs/hr)	Ave Hrly Emissions (lbs/hr)	Emissions (tons/yr)
Dry Kiln #1	P 15	4.10E-03	lb/1,000 BF	8,500	2.85	1,000 BF/hr	9,290	1,000 BF/yr	0.005	0.004	0.01904
Dry Kiln #2	P 16	4.10E-03	lb/1,000 BF	8,500	2.85	1,000 BF/hr	9,290	1,000 BF/yr	0.005	0.004	0.01904
Dry Kiln #3	P 17	4.10E-03	lb/1,000 BF	8,500	1.43	1,000 BF/hr	4,645	1,000 BF/yr	0.003	0.002	0.00952
Dry Kiln #4	P 18	4.10E-03	lb/1,000 BF	8,500	2.85	1,000 BF/hr	9,290	1,000 BF/yr	0.005	0.004	0.01904
Dry Kiln #5	P 19	4.10E-03	lb/1,000 BF	8,500	2.85	1,000 BF/hr	9,290	1,000 BF/yr	0.005	0.004	0.01904
Dry Kiln #6	P 20	4.10E-03	lb/1,000 BF	8,500	2.85	1,000 BF/hr	9,290	1,000 BF/yr	0.005	0.004	0.01904
Dry Kiln #7	P 26	4.10E-03	lb/1,000 BF	8,500	2.85	1,000 BF/hr	9,290	1,000 BF/yr	0.005	0.004	0.01904
							60,384				
								Total	0.02957	0.025	0.10
								IDAPA EL		0.00051	

EF reference: worst case (lodgepole) from ODEQ dry kiln memo 050907

Methanol Process Name	IDAPA 585 TAP	Em. Factor	EF Units	Operating (hours)	Avg Throughput (hourly)	Units	Throughput (annual)	Units	120% Max hrly Emissions (lbs/hr)	Emissions (tons/yr)
Dry Kiln #1	P 15	6.50E-02	lb/1,000 BF	8,500	2.85	1,000 BF/hr	9,290	1,000 BF/yr	0.085	0.30
Dry Kiln #2	P 16	6.50E-02	lb/1,000 BF	8,500	2.85	1,000 BF/hr	9,290	1,000 BF/yr	0.085	0.30
Dry Kiln #3	P 17	6.50E-02	lb/1,000 BF	8,500	1.43	1,000 BF/hr	4,645	1,000 BF/yr	0.043	0.15
Dry Kiln #4	P 18	6.50E-02	lb/1,000 BF	8,500	2.85	1,000 BF/hr	9,290	1,000 BF/yr	0.085	0.30
Dry Kiln #5	P 19	6.50E-02	lb/1,000 BF	8,500	2.85	1,000 BF/hr	9,290	1,000 BF/yr	0.085	0.30
Dry Kiln #6	P 20	6.50E-02	lb/1,000 BF	8,500	2.85	1,000 BF/hr	9,290	1,000 BF/yr	0.085	0.30
Dry Kiln #7	P 26	6.50E-02	lb/1,000 BF	8,500	2.85	1,000 BF/hr	9,290	1,000 BF/yr	0.085	0.30
							60,384			
								Total	0.469	1.7
								IDAPA EL	17.300	

EF reference: worst case (white fir) among species processed at BLP (all species always processed <200 degrees) from ODEQ dry kiln memo 050907

Propionaldehyde Process Name	IDAPA 585 TAP	Em. Factor	EF Units	Operating (hours)	Avg Throughput (hourly)	Units	Throughput (annual)	Units	120% Max hrly Emissions (lbs/hr)	Emissions (tons/yr)
Dry Kiln #1	P 15	1.00E-03	lb/1,000 BF	8,500	2.85	1,000 BF/hr	9,290	1,000 BF/yr	0.085	0.30
Dry Kiln #2	P 16	1.00E-03	lb/1,000 BF	8,500	2.85	1,000 BF/hr	9,290	1,000 BF/yr	0.085	0.30
Dry Kiln #3	P 17	1.00E-03	lb/1,000 BF	8,500	1.43	1,000 BF/hr	4,645	1,000 BF/yr	0.043	0.15
Dry Kiln #4	P 18	1.00E-03	lb/1,000 BF	8,500	2.85	1,000 BF/hr	9,290	1,000 BF/yr	0.085	0.30
Dry Kiln #5	P 19	1.00E-03	lb/1,000 BF	8,500	2.85	1,000 BF/hr	9,290	1,000 BF/yr	0.085	0.30
Dry Kiln #6	P 20	1.00E-03	lb/1,000 BF	8,500	2.85	1,000 BF/hr	9,290	1,000 BF/yr	0.085	0.30
Dry Kiln #7	P 26	1.00E-03	lb/1,000 BF	8,500	2.85	1,000 BF/hr	9,290	1,000 BF/yr	0.085	0.30
							60,384			
								Total	0.469	1.7

EF reference: worst case (all species except doug fir) from ODEQ dry kiln memo 050907

Total HAPs Process Name	IDAPA 585 TAP	Em. Factor	EF Units	Operating (hours)	Avg Throughput (hourly)	Units	Throughput (annual)	Units	120% Max hrly Emissions (lbs/hr)	Emissions (tons/yr)
Dry Kiln #1	P 15	2.40E-01	lb/1,000 BF	8,500	2.85	1,000 BF/hr	9,290	1,000 BF/yr	0.315	1.11
Dry Kiln #2	P 16	2.40E-01	lb/1,000 BF	8,500	2.85	1,000 BF/hr	9,290	1,000 BF/yr	0.315	1.11
Dry Kiln #3	P 17	2.40E-01	lb/1,000 BF	8,500	1.43	1,000 BF/hr	4,645	1,000 BF/yr	0.157	0.56
Dry Kiln #4	P 18	2.40E-01	lb/1,000 BF	8,500	2.85	1,000 BF/hr	9,290	1,000 BF/yr	0.315	1.11
Dry Kiln #5	P 19	2.40E-01	lb/1,000 BF	8,500	2.85	1,000 BF/hr	9,290	1,000 BF/yr	0.315	1.11
Dry Kiln #6	P 20	2.40E-01	lb/1,000 BF	8,500	2.85	1,000 BF/hr	9,290	1,000 BF/yr	0.315	1.11
Dry Kiln #7	P 26	2.40E-01	lb/1,000 BF	8,500	2.85	1,000 BF/hr	9,290	1,000 BF/yr	0.315	1.11
							60,384			
								Total	1.731	6.1

EF reference: worst case (white fir) among species processed at BLP (all species always processed <200 degrees) from ODEQ dry kiln memo 050907

	Source ID	Stack Release Type	Source Description	Easting (X)	Northing (Y)	Base Elevation	Stack Height	Temperature	Exit Velocity	Stack Diameter	PM_TEN	NOX	CO	SO2	FORMALD	ACETALD	BOILER
				(m)	(m)	(m)	(ft)	(°F)	(fps)	(ft)	(lb/hr)	(tpy)	(lb/hr)	(lb/hr)	(tpy)	(tpy)	(lb/hr)
1	HFBOILER	DEFAULT	hog fuel boiler	517394.0	5195717.0	772.0	50.0	250.0	76.0	3.6	27.00	70.22	57.92	2.41	0.2033	0.0804	1
2	KILN5N	DEFAULT	kiln pseudo stack	517306.0	5195962.2	773.0	28.5	170.0	22.1	3.5	0.0570				0.0063	0.0121	
3	KILN3N	DEFAULT	kiln pseudo stack	517322.3	5195962.2	773.3	28.5	170.0	22.1	3.5	0.0285				0.0032	0.0060	
4	KILN1N	DEFAULT	kiln pseudo stack	517338.7	5195962.2	773.6	28.5	170.0	22.1	3.5	0.0570				0.0063	0.0121	
5	KILN5T	DEFAULT	kiln pseudo stack	517306.0	5195956.6	773.0	28.5	170.0	22.1	3.5	0.0570				0.0063	0.0121	
6	KILN3T	DEFAULT	kiln pseudo stack	517322.3	5195956.6	773.3	28.5	170.0	22.1	3.5	0.0285				0.0032	0.0060	
7	KILN1T	DEFAULT	kiln pseudo stack	517338.7	5195956.6	773.6	28.5	170.0	22.1	3.5	0.0570				0.0063	0.0121	
8	KILN5S	DEFAULT	kiln pseudo stack	517306.0	5195951.0	773.0	28.5	170.0	22.1	3.5	0.0570				0.0063	0.0121	
9	KILN3S	DEFAULT	kiln pseudo stack	517322.3	5195951.0	773.3	28.5	170.0	22.1	3.5	0.0285				0.0032	0.0060	
10	KILN1S	DEFAULT	kiln pseudo stack	517338.7	5195951.0	773.6	28.5	170.0	22.1	3.5	0.0570				0.0063	0.0121	
11	KILN6S	DEFAULT	kiln pseudo stack	517300.5	5195951.0	773.0	28.5	170.0	22.1	3.5	0.0570				0.0063	0.0121	
12	KILN4S	DEFAULT	kiln pseudo stack	517316.9	5195951.0	773.0	28.5	170.0	22.1	3.5	0.0570				0.0063	0.0121	
13	KILN2S	DEFAULT	kiln pseudo stack	517333.2	5195951.0	773.5	28.5	170.0	22.1	3.5	0.0570				0.0063	0.0121	
14	KILN6N	DEFAULT	kiln pseudo stack	517300.5	5195962.2	773.0	28.5	170.0	22.1	3.5	0.0570				0.0063	0.0121	
15	KILN4N	DEFAULT	kiln pseudo stack	517316.9	5195962.2	773.0	28.5	170.0	22.1	3.5	0.0570				0.0063	0.0121	
16	KILN2N	DEFAULT	kiln pseudo stack	517333.2	5195962.2	773.5	28.5	170.0	22.1	3.5	0.0570				0.0063	0.0121	
17	KILN6T	DEFAULT	kiln pseudo stack	517300.5	5195956.6	773.0	28.5	170.0	22.1	3.5	0.0570				0.0063	0.0121	
18	KILN4T	DEFAULT	kiln pseudo stack	517316.9	5195956.6	773.0	28.5	170.0	22.1	3.5	0.0570				0.0063	0.0121	
19	KILN2T	DEFAULT	kiln pseudo stack	517333.2	5195956.6	773.5	28.5	170.0	22.1	3.5	0.0570				0.0063	0.0121	
20	KILN7N	DEFAULT	kiln pseudo stack	517348.0	5195962.2	773.7	28.5	170.0	22.1	3.5	0.0570				0.0063	0.0121	
21	KILN7T	DEFAULT	kiln pseudo stack	517348.0	5195956.6	773.7	28.5	170.0	22.1	3.5	0.0570				0.0063	0.0121	
22	KILN7S	DEFAULT	kiln pseudo stack	517348.0	5195951.0	773.7	28.5	170.0	22.1	3.5	0.0570				0.0063	0.0121	
23	P7	HORIZONTAL	sawdust cyclone +P4 P6	517404.0	5195717.0	772.0	59.0	68.0	0.0	0.0	0.135						
24	P11	HORIZONTAL	shavings cyclone	517302.0	5195800.0	772.4	60.0	68.0	0.0	0.0	0.19						
25	P12	HORIZONTAL	shavings cyclone	517302.0	5195800.0	772.4	75.0	68.0	0.0	0.0	1.576						
26	P13	RAINCAP	shavings cyclone	517365.0	5195740.0	772.0	52.0	68.0	0.0	3.2	1.092						
27	P14	HORIZONTAL	shavings cyclone	517415.0	5195717.0	772.0	60.0	68.0	0.0	0.0	0.515						
28	P24	DEFAULT	baghouse	517422.0	5195763.0	772.6	19.0	68.0	0.0	1.0	4.00E-05						

	Source ID	Source Description	Easting (X)	Northing (Y)	Base Elevation	Release Height	Easterly Length	Northerly Length	Vertical Dimension	PM_TEN	NOX	CO	SO2	FORMALD	ACETALD	BOILER
			(m)	(m)	(m)	(ft)	(ft)	(ft)	(ft)	(lb/hr)	(tpy)	(lb/hr)	(lb/hr)	(tpy)	(tpy)	(lb/hr)
29	P23	Land app ash	517542.6	5195496.0	784.3	1.0	250	100	3.0	0.153						
	yardfugs	Log yard fugitives	517250.6	5195640.0	784.3	1.0	125	60	4	0.024						

	Source ID	Source Description	Easting (X)	Northing (Y)	Base Elevation	Release Height	Horizontal Dimension	Vertical Dimension	PM_TEN	NOX	CO	SO2	FORMALD	ACETALD	BOILER
			(m)	(m)	(m)	(ft)	(ft)	(ft)	(lb/hr)	(tpy)	(lb/hr)	(lb/hr)	(tpy)	(tpy)	(lb/hr)
30	HOGFUGS	Hog area fugitives	517443.0	5195762.0	773.0	0.9	34.9	20.5	0.431						
31	BKSDFUGS	Bark sawd bin fugitives	517355.3	5195731.5	772.0	3.1	23.3	19.5	0.487						
32	CHSHFUGS	Chip shavs bin fugitives	517407.0	5195728.5	772.0	3.1	23.3	19.5	0.508						
33	BLRFUGS	boiler area fugitives	517425.0	5195699.5	772.0	2.1	58.1	19.5	0.185						
34	P21	target box	517438.0	5195748.0	772.4	7.9	2.8	16.3	0.788						

Modeling results - Boiler max impact / lb/hr emissions

	Spokane met					BOI met	
	1986	1987	1988	1989	1990	88-92	**MAX**
1 hr	9.95	12.81748	12.62	12.36	10.24	9.65	**12.81748**
3 hr	5.61	6.79	6.25	6.05	8.00345	5.00	**8.00345**
8 hr	2.90	3.26	2.97	3.60	3.70844	2.57	**3.70844**
24 hr	1.28	1.65	1.42	1.35	1.68338	0.93	**1.68338**
annual	0.156	0.166	0.159	0.156	0.18983	0.128	**0.18983**

Source ID	Stack Release Type	Source Description	Easting (X) (m)	Northing (Y) (m)	Base Elevation (m)	Stack Height (ft)	Temperature (°F)	Exit Velocity (fps)	Stack Diameter (ft)	PM_TEN (lb/hr)	FORMALD (tpy)	ACETALD (tpy)	BOILER (lb/hr)	
HFBOILER	DEFAULT	hog fuel boiler	517394	5195717	772	50	249.998	75.97112861	3.600065617	27	0.426000001	0.0804	1	0
KILN5N	DEFAULT	kiln pseudo stack	517305.95	5195962.23	773	28.5	170.006	22.07020997	3.5	0.057	0.006299999	0.012099999		0
KILN3N	DEFAULT	kiln pseudo stack	517322.32	5195962.23	773.27	28.5	170.006	22.07020997	3.5	0.0285	0.0032	0.005999999		0
KILN1N	DEFAULT	kiln pseudo stack	517338.68	5195962.23	773.57	28.5	170.006	22.07020997	3.5	0.057	0.006299999	0.012099999		0
KILN5T	DEFAULT	kiln pseudo stack	517305.95	5195956.62	773	28.5	170.006	22.07020997	3.5	0.057	0.006299999	0.012099999		0
KILN3T	DEFAULT	kiln pseudo stack	517322.32	5195956.62	773.32	28.5	170.006	22.07020997	3.5	0.0285	0.0032	0.005999999		0
KILN1T	DEFAULT	kiln pseudo stack	517338.68	5195956.62	773.56	28.5	170.006	22.07020997	3.5	0.057	0.006299999	0.012099999		
KILN5S	DEFAULT	kiln pseudo stack	517305.95	5195951.02	773	28.5	170.006	22.07020997	3.5	0.057	0.006299999	0.012099999		
KILN3S	DEFAULT	kiln pseudo stack	517322.32	5195951.02	773.31	28.5	170.006	22.07020997	3.5	0.0285	0.0032	0.005999999		
KILN1S	DEFAULT	kiln pseudo stack	517338.68	5195951.02	773.56	28.5	170.006	22.07020997	3.5	0.057	0.006299999	0.012099999		
KILN6S	DEFAULT	kiln pseudo stack	517300.5	5195951.02	773	28.5	170.006	22.07020997	3.5	0.057	0.006299999	0.012099999		0
KILN4S	DEFAULT	kiln pseudo stack	517316.86	5195951.02	773	28.5	170.006	22.07020997	3.5	0.057	0.006299999	0.012099999		0
KILN2S	DEFAULT	kiln pseudo stack	517333.23	5195951.02	773.47	28.5	170.006	22.07020997	3.5	0.057	0.006299999	0.012099999		
KILN6N	DEFAULT	kiln pseudo stack	517300.5	5195962.23	773	28.5	170.006	22.07020997	3.5	0.057	0.006299999	0.012099999		
KILN4N	DEFAULT	kiln pseudo stack	517316.86	5195962.23	773	28.5	170.006	22.07020997	3.5	0.057	0.006299999	0.012099999		
KILN2N	DEFAULT	kiln pseudo stack	517333.23	5195962.23	773.46	28.5	170.006	22.07020997	3.5	0.057	0.006299999	0.012099999		
KILN6T	DEFAULT	kiln pseudo stack	517300.5	5195956.62	773	28.5	170.006	22.07020997	3.5	0.057	0.006299999	0.012099999		
KILN4T	DEFAULT	kiln pseudo stack	517316.86	5195956.62	773	28.5	170.006	22.07020997	3.5	0.057	0.006299999	0.012099999		
KILN2T	DEFAULT	kiln pseudo stack	517333.23	5195956.62	773.47	28.5	170.006	22.07020997	3.5	0.057	0.006299999	0.012099999		
KILN7N	DEFAULT	kiln pseudo stack	517347.96	5195962.23	773.73	28.5	170.006	22.07020997	3.5	0.057	0.006299999	0.012099999		
KILN7T	DEFAULT	kiln pseudo stack	517347.96	5195956.62	773.68	28.5	170.006	22.07020997	3.5	0.057	0.006299999	0.012099999		
KILN7S	DEFAULT	kiln pseudo stack	517347.96	5195951.02	773.69	28.5	170.006	22.07020997	3.5	0.057	0.006299999	0.012099999		
P7	HORIZONTAL	dust cyclone +P4	517404	5195717	772	59	68	0.00328084	0.00328084	0.135				0
P11	HORIZONTAL	shavings cyclone	517302	5195800	772.42	60	68	0.00328084	0.00328084	0.19				0
P12	HORIZONTAL	shavings cyclone	517302	5195800	772.42	75	68	0.00328084	0.00328084	1.576				0
P13	RAINCAP	shavings cyclone	517365	5195740	772	52	68	0.00328084	3.200131234	1.092				0
P14	HORIZONTAL	shavings cyclone	517415	5195717	772	60	68	0.00328084	0.00328084	0.515				0
P24	DEFAULT	baghouse	517422	5195763	772.6	19	68	0.00328084	1	4.00E-05				0

 POINT SOURCES

Source ID	Source Description	Easting (X)	Northing (Y)	Base Elevation	Release Height	Easterly Length	Northerly Length	Angle from North	Vertical Dimension	PM_TEN	FORMALD	ACETALD	BOILER
		(m)	(m)	(m)	(ft)	(ft)	(ft)		(ft)	(lb/hr)	(tpy)	(tpy)	(lb/hr)
P23	Land app ash	517542.59	5195496	784.29	0.984251969	250	100		2.985564304	0.153			
YARDFUGS	Land app ash	517250.59	5195640	784.29	0.984251969	125	75		2.49343832	0.024			

MI form Model Source Data - AREA SOURCES

Source ID	Source Description	Easting (X)	Northing (Y)	Base Elevation	Release Height	Horizontal Dimension	Vertical Dimension	PM_TEN	FORMALD	ACETALD	BOILER
		(m)	(m)	(m)	(ft)	(ft)	(ft)	(lb/hr)	(tpy)	(tpy)	(lb/hr)
HOGFUGS	Hog area fugitives	517442.97	5195762	773	0.918635171	34.87532808	20.47244094	0.431			
BKSDFUGS	rk sawd bin fugiti	517355.34	5195731.5	772	3.051181102	23.26115486	19.52099738	0.487			
CHSHFUGS	ip shavs bin fugiti	517406.97	5195728.5	772	3.051181102	23.26115486	19.52099738	0.508			
BLRFUGS	oiler area fugitive	517424.97	5195699.5	772	2.132545932	58.13648294	19.52099738	0.185			
P21	target box	517438	5195748	772.41	7.874015748	2.788713911	16.27296588	0.788			

MI form Model Source Data - VOLUME SOURCES